Note: This is a reference cited in *AP 42, Compilation of Air Pollutant Emission Factors, Volume I Stationary Point and Area Sources.* AP42 is located on the EPA web site at www.epa.gov/ttn/chief/ap42/

The file name refers to the reference number, the AP42 chapter and section. The file name "ref02_c01s02.pdf" would mean the reference is from AP42 chapter 1 section 2. The reference may be from a previous version of the section and no longer cited. The primary source should always be checked.

AP42 Section:	11.3
Reference:	28
Title:	Crescent Brick Stack Test-No. 2 Tunnel Kiln, CSA Company, Alliance, OH, February 29, 1988.

CRESCENT BRICK

STACK TEST - FEBRUARY 29, 1988

NO. 2 TUNNEL KILN

CONTENTS

BRIEF OF TESTS	1
RESULTS	1
TEST METHODS	1
PARTICULATE TEST APPARATUS	1
PARTICULATE TEST PROCEEDURES	2
SULFUR DIOXIDE TEST APPARATUS	4
SULFUR DIOXIDE TEST PROCEEDURES	4
COMPILED DATA	6
LOCATION OF SAMPLE PORTS AND POINTS	7 - 8
SCHEMATIC OF METHOD 5 APPARATUS	9
SCHEMATIC OF INTEGRATED SAMPLER	10
SCHEMATIC OF METHOD 6 APPARATUS	11
APPENDIX I	
CALCULATION FORMULA	12
NOMENCLATURE	13
PROCESS WEIGHT SHEET	14
TEST 1 RAW DATA AND CALCULATIONS	15 - 18
TEST 2 " " " "	19 - 22
TEST 3 " " " "	23 - 26
APPENDIX II	
INTENT TO TEST INFORMATION	27 -38

SOURCE EMISSION TESTS
CRESCENT BRICK COMPANY, INC.
EAST CANTON OH
NO. 2 KILN
FEBRUARY 29, 1988

Brief of Tests

Tests were performed February 29, 1988 to determine the particulate and sulfur dioxide emission rates. The tests were performed by EPA methods 1 through 6 as per CFR, Subchapter C, Chapter 1, Title 40, Volume 42, No. 160, Thursday, August 18, 1977. The number of sample points used for method 1 was as per CFR Volume 48, No. 191, Friday, September 30, 1983.

The tunnel kiln is a continuous operation where the green product is loaded on cars that travel through the various heat zones in the kiln and discharge as a finished product at the other end. The gases are counter flow through the kiln exhausted near the charging end by an induced draft fan discharging directly to the stack.

Results (See table 1)

The average particulate emission rate was 1.75 pounds per hour and the sulfur dioxide was 202 PPM or 12.98 pounds per hour at a process weight rate of 9,042 pounds per hour.

Test Methods

A twenty four point traverse was selected for the twenty nine inch diameter stainless steel stack as shown in figure 1. Each point was isokinetically sampled for two and one half minutes at each point for a total sample time of sixty minutes as per method 1.

The CO_2 and O_2 analysis were conducted by an orsat flue gas analyzer from an integrated sample taken at the test ports during each test run to provide date for method 3.

Method 5 was used to determine the particulate quantity, moisture determination by method 4 and gas velocity by method 2 using a Research Appliance Corp. "Stacksamplr".

Method six was used to determine the sulfur dioxide concentration using an APC sampling train.

Particulate Test Apparatus

A schematic of the apparatus is shown in figure 2.

The dust ladden gases were passed through a heated glass lined probe and heated glass cyclone seperator bypass followed by a four inch filter holder containing Gelman type A-E fiberglass filter media.

The gases leaving the filter were cooled in a series of three impingers packed in ice. The first and third impinger were the modified Greenburg-Smith type and the second one was a standard Greenburg-Smith. The first and second impingers were filled with 100 ml of distilled water with the third one used as a dry trap. After leaving the dry trap, the gases passed through a "Drierite" column containing about 500 grams of calcium sulfate ($CaSO_4$) desicant to remove the remaining water vapor. The dry gas passed through the hose portion of the umbilical cord to a Research Appliance Corp. model 2343 "Stacksamplr" module. In the module the gas was moved through the system by a leakless air pump to a Rockwell 175-S dry test meter. The dry test meter exhausted to a calibrated orifice to measure the flow rate of the gases passing through the sampling apparatus. A type "S" pitot tube was attached to the sheath of the heated probe to measure the velocity head of the flue gases near the tip of the probe nozzle. The orifice pressure taps and the pitot tube were connected to a Dwyer dual 10 inch combination inclined-well type manometer. One half of the manometer measured the orifice differential ($\triangle H$) and the other half measured the flue gas velocity head ($\triangle P$).

The temperature of the flue gas was measured by a type "K" thermocouple connected to a James Biddel No. 72-125-19 direct reading potentiometer.

The CO_2 and O_2 were measured with a Burrell "Industro" Model B orsat from an integrated sample taken by withdrawing a constant flow rate of gas from the stack and injecting it into a Tedlar bag. This was done by drawing the gas through an in-stack filter via polyethlene tubing to a condenser and condensate collector ahead of a leakless disphragm vacuum-pressure pump. The pump discharged to the rotometer and the Tedlar bag. The apparatus is equipped with valves to by-pass the rotometer and bag when clearing the sample line as shown in figure 3

Particulate Test Procedures

The probe, filter and glassware was assembled and leak tested in our lab before transporting to the job site. Three sets of equipment were used. At the job site a preliminary pitot traverse was performed to select the proper nozzle size. The nozzles were measured with an inside vernier caliber and micrometer calibrated with a one inch micrometer standard.

The impingers were filled with distilled water and the "Drierite" columns were connected just prior to elevating the probe into position.

After leak testing the apparatus at 10 inches of mercury the probe was inserted at the first sample point to start the test.

The isokinetic sampling rates were determined using a portable desk top computer programmed to calculate the proper ΔH setting at the flue gas temperature, pressure, density and the assumed moisture along with the temperature, ΔP and an assumed ΔH of the test module.

The sampling rate (ΔH) can be determined in less than 15 seconds using this technique.

The apparatus was leak tested after the test was completed at a vacuum exceeding that encountered during the test.

The moisture content was determined from the amount of condensate collected in the impingers and the difference of the tare and gross weight of the "Drierite" desicant column. The desicant column was weighed on an Ohaus 5 kg industrial lab balance to the nearest half gram.

The filter media was dried in a desicator at room temperature for 48 hours before tare and gross weighing on a Stanton CL4D analytical balance.

The probe liner, nozzle, cyclone bypass and front half of the filter holder were washed with acetone and brush after testing and evaporated to dryness at room temperature in 500 ml beakers. The beakers were dried and tare weighed prior to sample evaporation and gross weighed after allowing the samples to desicate for 24 hours. These weights were accomplished with the Stanton Balance.

The contents of the impingers were measured in a 250 ml graduate and poured into a 500 ml beaker. The impingers and graduate were washed with distilled water and brush with the washings added to the beaker. The beakers were placed in a desicator to cool and dry for at least twenty four hours before weighing. The tare and gross weights were accomplished in the same manner as the probe washings. The weight of the material collected in the impingers was not used in the calculations to obtain the weight of the particulate catch.

The integrated gas sampler was started at the beginning of the method 5 test with about two cubic foot of gas collected in the tedlar bag at the end of the test. The sampling rate was maintained constant during the test by maintaining a constant reading on the rotometer.

The orsat analysis was performed on the gases contained in the bag shortly after the test was completed.

Sulfur Dioxide Test Apparatus

A schematic of the test apparatus is shown in figure 4. The gases were drawn through a heated pyrex probe with a fiberglass wad attached to the sampling end of the probe. The probe was connected to the impinger train where it first passed through a midget bubbler containing 15 ml of 80% isopropyl alcohol. A wad of glass wool was packed in the top of the bubbler to collect any acid mist carryover. The gases then passed through two midget impingers, each containing 15 ml of 3% hydrogen peroxide solution followed by an empty midget impinger to collect the carryover from the preceeding impingers. The midget bubbler and impingers were contained in an ice bath to condense acid and water vapor. After leaving the dry trap the gases passed through a "Drierite" column containing about 500 grams of "Drierite" via rubber hose to remove the remaining water vapor. The dry gas was transmitted to the module through a "polyflow" tubing. In the module the gas was moved through the system by a leakless air pump connected to a rotometer to measure the gas flow rate and a Rockwell type "S" dry test meter to measure the gas volume. The dry test meter was equipped with a thermometer located in the top half of the gas meter to measure the temperature of the meter. The gas from the meter was discharged to the atmosphere.

Class "A" burrettes and pipets were used for the titrations in the lab analysis of the contents of the impingers.

Test Procedures

Two method 6 runs of twenty minute duration comprised one test.

A single point near the center of the duct using one of the method 5 sample ports was used for the sample location.

The sample train was leak checked using a calibrated vacuum gage. The vacuum gage was connected to the inlet of the sample train and the system was brought to a ten inch mercury vacuum and held for one minute before starting the test. After the test was completed the system was purged for fifteen minutes at the same flow rate using a seperate vacuum pump and rotometer. After purging the system, the contents of the midget bubbler were discarded and

the contents of the midget impingers along with the washings were placed in a marked polyethylene bottle. The samples were titrated at our Alliance lab as per EPA Federal Register methods using barium perclorate titrant and thorin indicator. The barium perclorate was standardized against a purchased .01 normal sulfuric acid standard. The dry gas volumetric flow rate (Q-CFH) from method 5 was used to calculate the pounds per hour of sulfur dioxide emission.

The calculations were performed as per Federal Register using a Radio Shack TRS-80 microcomputer modle IV.

The data input and output along with the raw data and process weight is shown in appendix I.

The Intest To Test information is shown in appendix II.

Submitted by,

Ernest L. Kolm

Test	1	2	3	Avg.
Date	2/29/88	2/29/88	2/29/88	
Time	10:16/11:30	12:15/13:25	14:30/15:35	
PARTICULATE QUANTITY				
Grains/f3 Dry STP	0.0336	0.0307	0.0316	0.0320
Pounds/Hr.	1.7850	1.6855	1.7885	1.7530
GASEOUS EMISSIONS				
SO2 Pounds/Hr	10.9	14.47	13.57	12.98
SO2 Parts/Million	177	228	202	202.333
STACK GAS CONDITIONS				
Temperature -dg. F	410	411	410	410.333
Static Pressure-in H2O	-.1	-.1	-.1	-.1
CO2 - %	3.1	3	2.4	2.83333
O2 - %	16.1	16.3	16.7	16.3667
H2O - %	4.95718	5.22231	4.51901	4.8995
Velocity - FPS	40.7642	42.3004	43.1571	42.0739
Stack Area - sqr. ft.	4.5	4.5	4.5	4.5
Gas Flow - ACFM	11006	11421	11652	11360
Gas Flow (DSTP) CFH	371273	383749	394880	383301
SAMPLE TRAIN CONDITIONS				
Pitot Delta P in H2O	.308	.331	.345	
Orifice Delta P in H2O	.82	.916	.99	
Temp. Meter - dg. F	87	88	88	
Gas Volume - CF Dry STP	29.5357	31.829	31.5474	
Barometer - in Hg	29.06	29.06	29.06	
Probe Tip Dia. - in.	.252	.252	.251	
Isokinetic Var. - %	103.809	108.232	105.083	

CRESCENT BRICK COMPANY INC
EAST CANTON OH
NO 2 KILN STACK
COMPILED DATA

Table 1

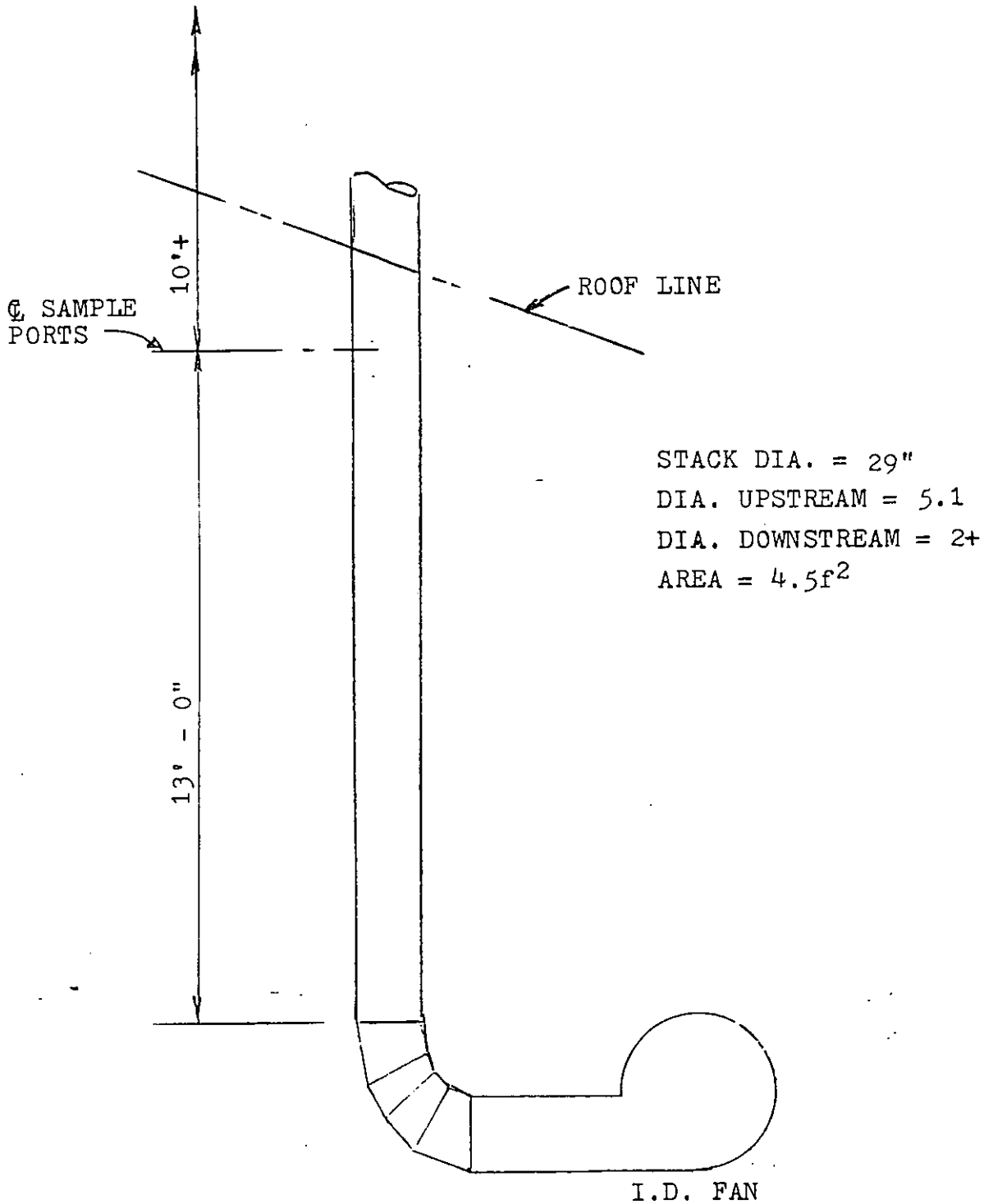

SAMPLE PORT LOCATION

FIGURE 1a

Sample Points For Round Ducts

Diameter of duct in inches = 29
Area = 4.58695
Radius = 14.5
Total No. Of Points = 24

(1)- 4.18579
(2)- 7.25
(3)- 9.35971
(4)- 11.0746
(5)- 12.5574
(6)- 13.8827

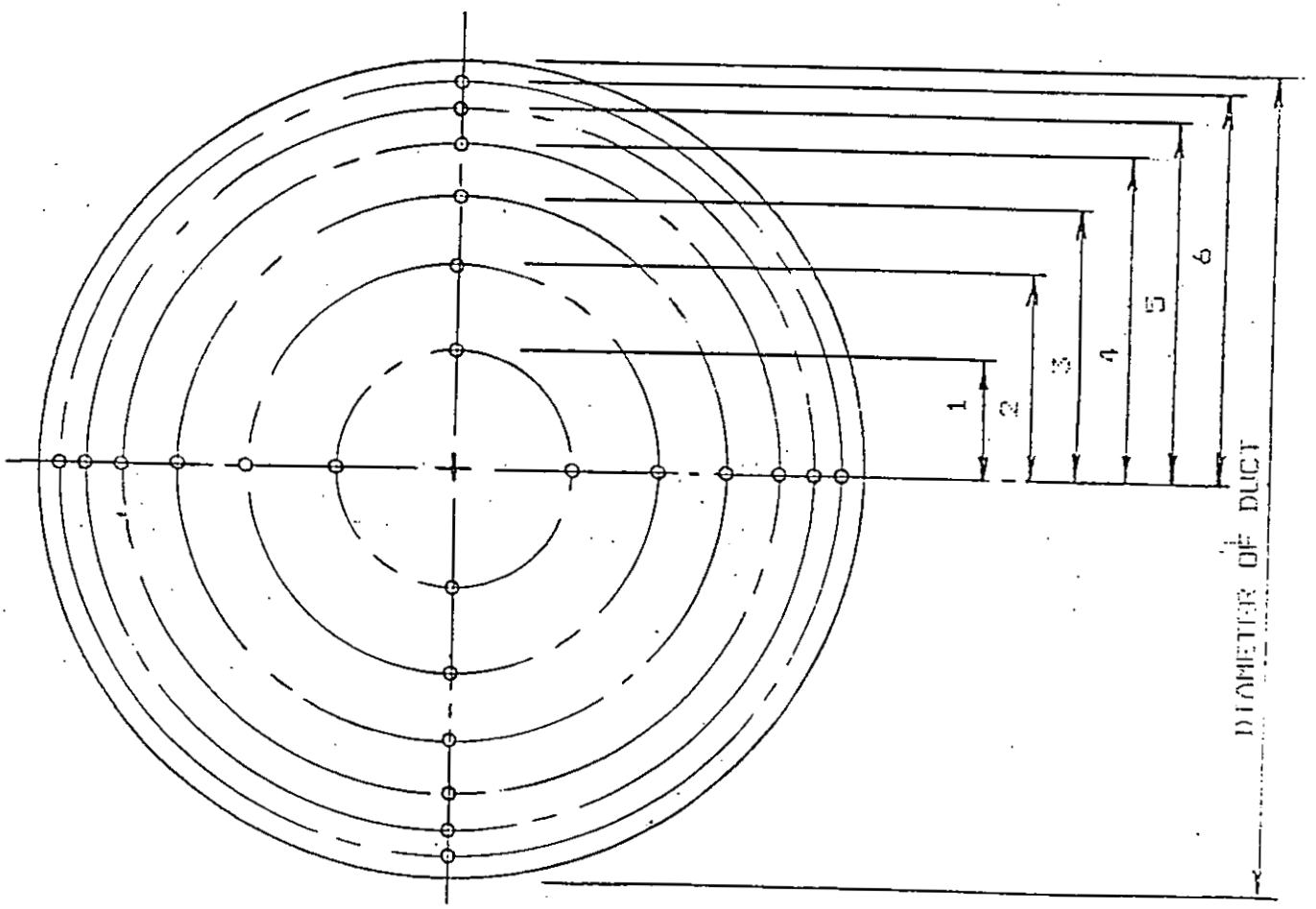

SAMPLE POINT LOCATION

FIGURE 1b

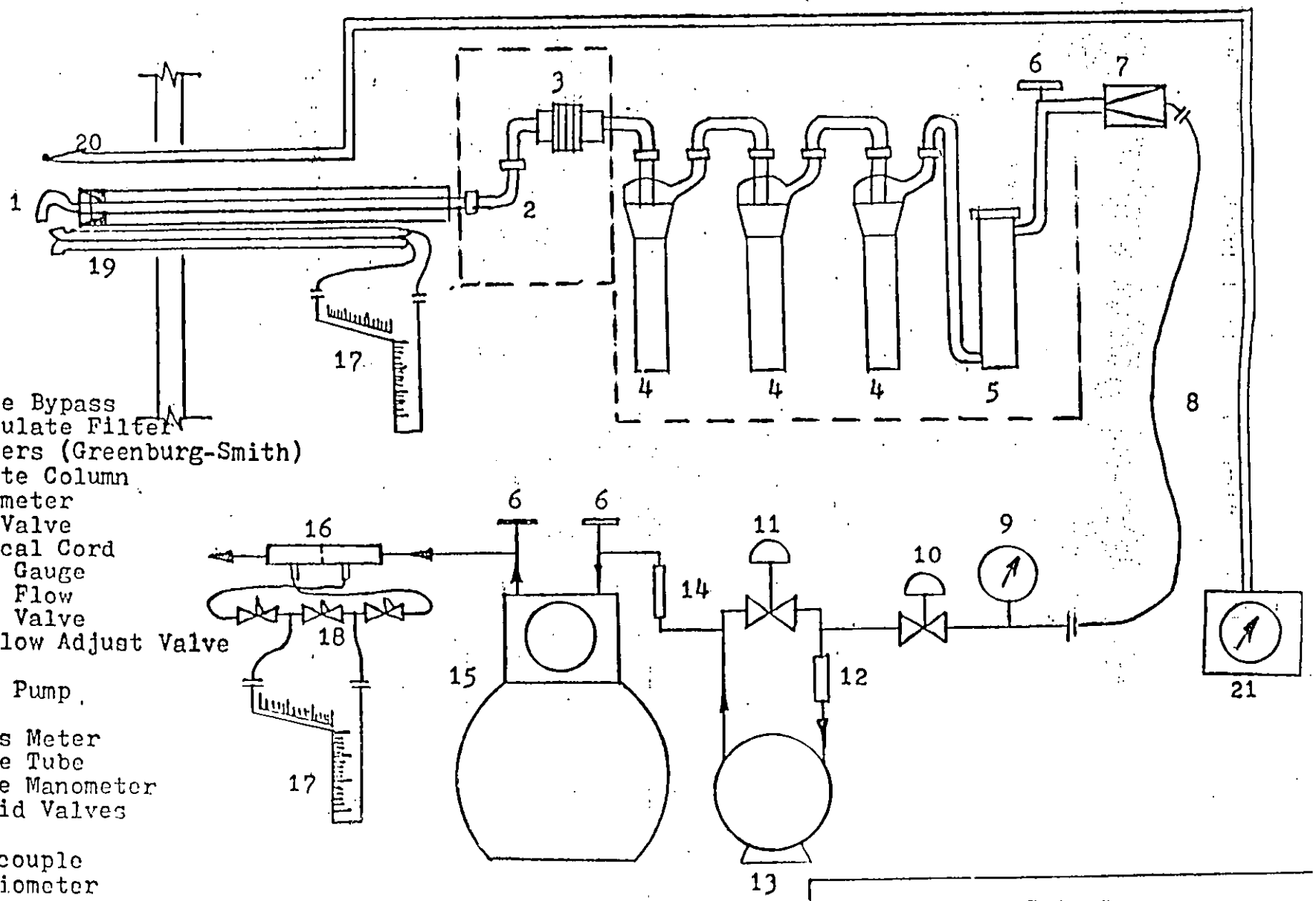

1) Probe
2) Cyclone Bypass
3) Particulate Filter
4) Impingers (Greenburg-Smith)
5) Drierite Column
6) Thermometer
7) Check Valve
8) Umbilical Cord
9) Vacuum Gauge
10) Course Flow Adjust Valve
11) Fine Flow Adjust Valve
12) Oiler
13) Vacuum Pump
14) Filter
15) Dry Gas Meter
16) Orifice Tube
17) Incline Manometer
18) Solenoid Valves
19) Pitot
20) Thermocouple
21) Potentiometer

C.S.A. Co.
MODIFICATION OF R.A.C. SAMPLE TRA
USING DRIERITE COLUMN IN PLACE OF
IMPINGER DESICANT

Figure 2

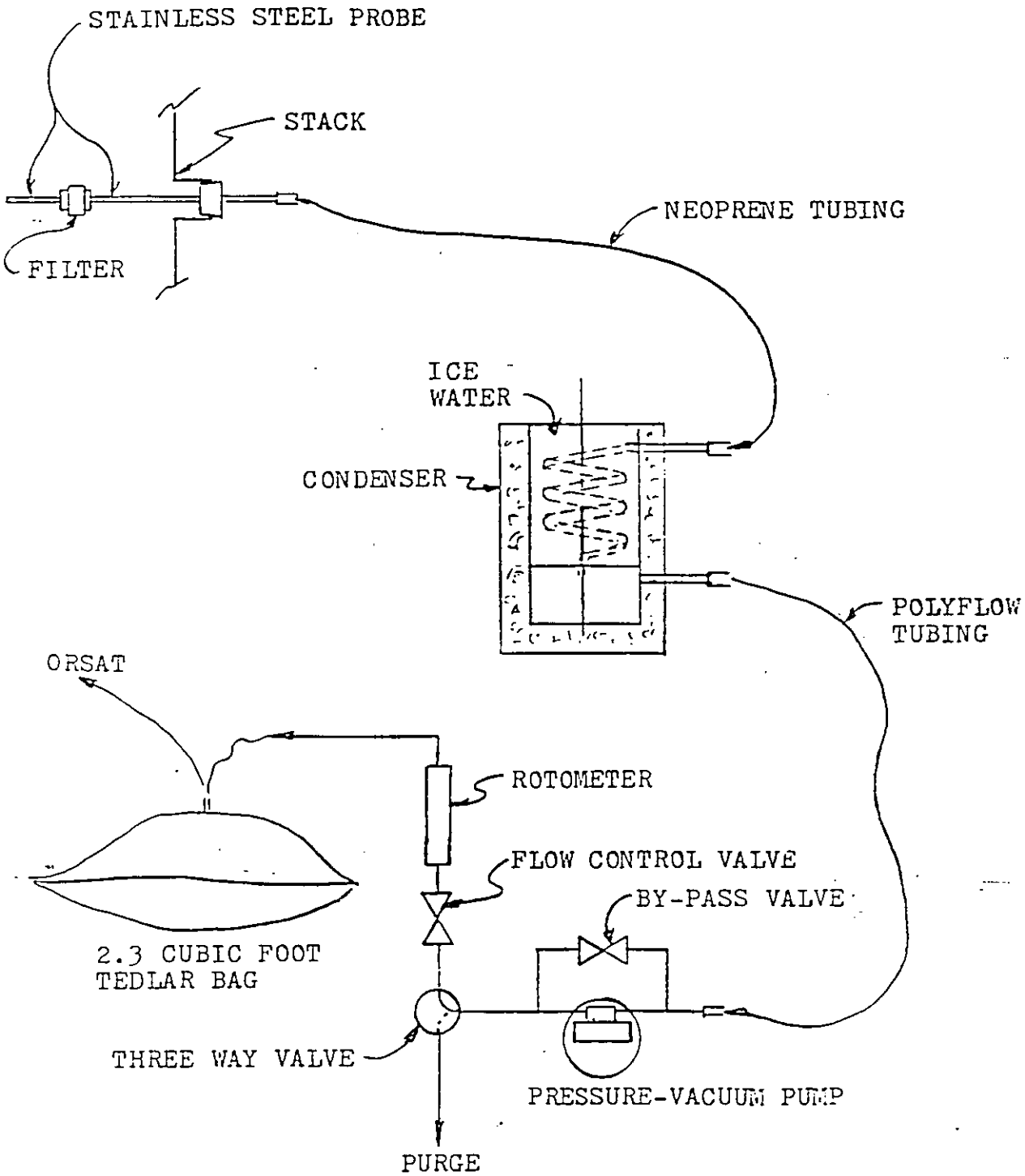

INTEGRATED SAMPLER

FIGURE 3

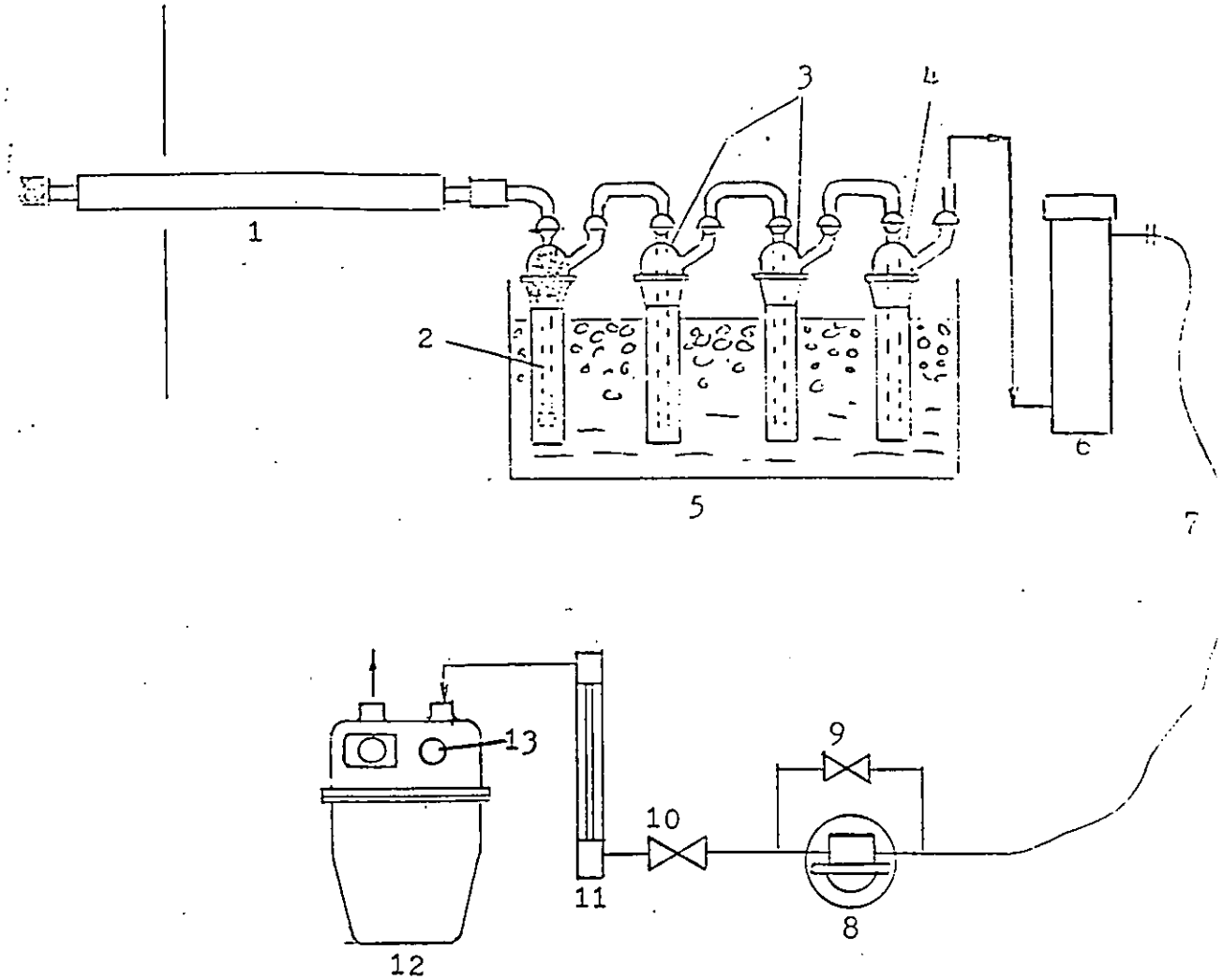

1) HEATED PYREX LINED PROBE. END PAKED WITH QUARTZ WOOL
2) MIDGET BUBBLER. TOP PACKED WITH GLASS WOOL. 15ml ISOPROPANOL (80%)
3) MIDGET IMPINGER. 15 ml H_2O_2 (3%)
4) MIDGET IMPINGER. DRY TRAP
5) ICE BATH
6) DRIERITE COLMN. FILLED WITH CALCIUM SULFATE DESICANT
7) UMBILICAL CORD
8) VACUUM-PRESSURE PUMP
9) BYPASS VALVE
10) CONTROL VALVE
11) ROTOMETER
12) DRY GAS TEST METER
13) THERMOMETER

EPA METHOD 6 SAMPLING APPARATUS

FIGURE 4

APPENDIX I

CALCULATIONS

Dry Molecular Weight lb/lb-mole

$$Md = 0.44\ (\%CO_2) + 0.32\ (\%O_2) + 0.28\ (\%N_2 + \%\ CO)$$

Dry Gas Volume (standard conditions), ft^3

$$Vmstd = \left(17.71\ \frac{{}^{o}R}{in.\ Hg}\right) Vm\left(\frac{Pbar + \frac{\Delta H}{13.6}}{Tm + 460}\right)$$

Volume of Water (standard conditions) ft^3

$$Vwstd = \left(0.0474\ \frac{ft^3}{ml}\right) Vlc$$

Moisture Content (proportion by volume)

$$Bwo = \frac{Vwstd}{Vmstd + Vwstd}$$

Molecular Weight of Stack Gas (wet basis) lb/lb-mole

$$Ms = Md\ (1-Bwo) + 18\ Bwo$$

Stack Gas Velocity, ft/sec

$$Vs = 85.48Cp\sqrt{\Delta P}\sqrt{\frac{Tsa}{Psa\ Ms}}$$

Stack Gas Volumetric Flow Rate dry basis, standard conditions, ft^3/hr

$$Qs = 3600\ (1-Bwo)\ VsAs\ \left(\frac{530}{Tsa}\right)\ \left(\frac{Psa}{29.92}\right)$$

Concentration (particulate matter in stack gas), lb/s.c.f. dry basis

$$Cs = 2.205 \times 10^{-6}\ \frac{Mn}{Vmstd}$$

Load (particulate matter in stack gas), lb/hour

$$L = (Qs)\ (Cs)$$

Isokinetic Variation, %

$$I = \frac{Tsa\ \left(1.667\ \frac{Min}{Sec}\right)\ \left[\left(0.00267\ \frac{in\ Hg\ ft^3}{ml\ {}^{o}R}\right)\ Vlc + \frac{VmPoa}{Tma}\right]}{\Theta\ Vs\ Psa\ An}$$

Concentration (particulate matter in stack gas), gr/s.c.f., dry basis

$$C''s = \left(0.0154\ \frac{gr}{mg}\right)\ \left(\frac{Mn}{Vmstd}\right)$$

Computer Nomenclature

Symbol	Description	Units
VM,FT3	Meter Volume	Cubic Feet
Pb,IN HG	Barometer	Inches Mercury
◊H,IN H2O	Orifice Differential	Inches Water
PMA,IN HG	Absolute Meter Pressure	Inches Mercury
TM, F	Meter Temperature	Degrees Fahrenheit
TS, F	Stack Temperature	Degrees Fahrenheit
PG,IN H2O	Stack Static Pressure	Inches Water
PSA,IN HG	Absolute Stack Pressure	Inches Mercury
CP	Pitot Coefficient	Dimentionless
$\sqrt{◊P}$,IN H2O	Average Square Root of ΔP	Inches Water
%CO2	Carbon Dioxide	Percent
%O2	Oxygen	Percent
%CO	Carbon Monoxide	Percent
%N2	Nitrogen	Percent
MD	Molecular Weight Dry Gas	Dimentionless
VLC,ML	Volume Condensate	Milliliters
AS,FT2	Stack Area	Square Feet
MN,MG	Total Particulate Catch Weight	Milligrams
Θ,MIN	Test Time	Minutes
DN,IN	Diameter of Nozzle	Inches
AN,FT2	Area of Nozzle	Square Feet
L,#/HR	Emission Rate	Pounds Per Hour
I,%	Isokinetic Variation	Percent
VMSTP,FT3	Meter Volume Standard Temp.& Press.Dry	Cubic Feet
VWSTP,FT3	Meter Volume Standard Temp.& Press.Wet	Cubic Feet
BWO,%	Moisture	Percent
MS	Molecular Weight @ Stack Conditions	Dimensionless
VS,FT/SEC	Stack Velocity	Feet Per Second
QS,FT3/HR	Stack Gas Flow (Dry STP)	Cubic Feet Per Hour
CS,#/SCF	Particulate Emission	Lbs.Per Std.Cubic Ft
C"S,GR/SCF	Particulate Emission	Grains.Per Std.Cubic

3.

JOHNSON MACHINE COMPANY

BOX 669 • CLEARFIELD, PA. 16830
PHONE (814) 765-9648

7 Cars/day @ 15.5T = 108.5T

108.5T ÷ 24 = 4.521/HR × 8 = 36.17T

4.521 TON/HR = 9,042 LB/HR

Structural Clay Tile

C.S.A. CO. (EPA METHOD 5) DATA SHEET

TEST NO. 1 PLANT CRESCENT BRICK DATE 2/29/8

LOCATION No KILN STACK BY [illegible]

BAROMETER 29.06 AMBIENT TEMP ASSUMED MOISTURE 5

MODULE NO. 2031 PROBE NO. 1-4 FILTER NO. 73 HEATER NO. 3 NOZZLE DIA. .252

TEST POINT	METER VOLUME (Vm)	METER TEMP (Tm) IN	METER TEMP (Tm) OUT	COND TEMP °F	FILTER HEATER TEMP °F	STACK TEMP °F (Ts)	STACK PRESS (Ps)	VACUUM IN. Hg	ORIFICE (ΔH) (Pm) IN. H_2O	VEL HEAD (ΔP)	TIME
	744.2	73	70	70	245	407	-.1	6-	.97	.37	10:16
1	746.3	76	70	52	250	407		6-	.97	.37	
2	747.5	87	72	52	250	407		6	1.0	.40	21
3	749.1	87	74	50	250	409		6-	.97	.37	
4	750.2	87	74	50	245	408		6-	.94	.36	26
5	750.9	88	76	50	250	408		5	.73	.28	
6	752.0	92	78	50	250	410		5+	.78	.30	31
7	754.1	94	80	52	245	410		5+	.78	.30	
8	755.2	95	80	52	250	410		5+	.78	.30	36
9	756.3	95	82	52	250	410		5+	.78	.30	
10	758.1	95	82	52	250	411		5+	.78	.30	41
11	759.2	96	84	52	250	410		5+	.78	.30	
12	760.3	96	85	52	250	410		5+	.78	.30	46
1	760.3	88	86	72	250	412		6	1.1	.40	11:00
1	762.4	90	86	65	245	412		6	1.1	.40	
2	763.4	93	86	60	250	412		5+	.87	.33	05
3	764.7	95	86	58	250	411		5+	.78	.30	
4	766.1	95	86	58	245	411		5+	.78	.30	10
5	767.2	96	86	56	250	412		5+	.78	.30	
6	768.2	96	86	56	250	412		5+	.78	.30	15
7	769.2	96	86	56	250	412		5+	.78	.30	
8	771.2	96	86	56	250	412		5+	.78	.30	20
9	772.6	96	86	56	245	411		5	.66	.25	
10	773.6	96	88	55	250	410		5	.66	.25	25
11	774.9	96	88	55	250	410		5	.66	.25	
12	776.0	96	88	55	250	410		5	.66	.25	30
	44.6										
TOTAL	31.4	91.9	82.0								
AVERAGE		86.95		~	~	410	-.1	MAX 6	.82	.308	60 MIN

ORSAT DATA N_2= 80.8

TIME	INTEGRATED				AVG
CO2	3.1	3.1	3.1		3.1
O2	16.1	16.1	16.1		16.1
CO					

CONDESATE COLLECTED

	FINAL	INITIAL	TOTAL
DRIERITE	968.5	964	4.5
IMPINGER	228	200	28.0
GRAND TOTAL (Vlw)			32.5

FILTER WEIGHT	PROBE WASH WT	IMPINGER WASH WT
GROSS .6870	181.1667	174.6461
TARE .6495	181.1412	174.6347
NET .0375	.0155	.0114

LEAK RATE @ 10 "Hg = <.01

AVERAGE $\sqrt{\Delta P}$ = .5547

TOTAL PARTICULATE WEIGHT (Mn) 64.4 mg | STACK AREA (As) 4.5 FT2

E.P.A. Method 5

DATA INPUT

Pb,In Hg	Barometer	29.06
VM,ft3	Meter Volume	31.4
ΔH,In H2O	Orifice Differential	.82
PG,In H2O	Stack Static Pressure	-.1
Tm,F	Meter Temperature	87
Ts,F	Stack Temperature	410
CP	Pitot Coefficient	.84
$\sqrt{\Delta P}$,In H2O	Average Square Root Of Delta P	.5547
% CO2	Carbon Dioxide	3.1
% O2	Oxygen	16.1
% N	Nitrogen	80.8
VCL,Ml	Volume Of Condensate	32.5
AS,ft2	Stack Area	4.5
MN,Mg	Total Particulate Catch Weight	64.4
Ø,Min	Test Time	60
DN,In	Diameter Of Nozzle	.252

RESULTS

Pma,In Hg	Absolute Meter Pressure	29.12
PSA,In Hg	Absolute Stack Pressure	29.05
MD	Molecular Weight Dry Gas	29.14
MS	Molecular Weight @ Stack Conditions	28.59
VMSTP,ft3	VM Standard Temp.& Press. Dry	29.54
VWSTP,ft3	VM Standard Temp.& Press. Wet	1.54
BWO,%	Moisture	4.96
I,%	Isokinetic Variation	103.81
VS,ft/Sec	Stack Velocity	40.76
QA,ASCFM	Stack Gas Flow (Actual)	11006
QS,ft3/Hr	Stack Gas Flow (Dry STP)	371273
L,#/Hr	Emission Rate	1.79
CS,#/SCF	Particulate Emission	4.80782E-06
C''S,Grn/SCF	Particulate Emission	0.0336

CRESCENT BRICK COMPANY INC
EAST CANTON OH
NO 2 KILN STACK
2/29/88
TEST NO 1

CSA CO

EPA METHOD 6 (SULFUR DIOXIDE)

DATA AND CALCULATION SHEET

TEST NO. 1-1 PLANT CRESCENT BRICK DATE 2/29/81

LOCATION NO 2 KILN STACK BY DCK RM

Pbar 29.06

Vm	Tmi	Tmo	ROTOMETER	TIME
59.582	78	78	4	10:18
59.792	80	80		22
60.002	81	81		28
60.390	83	83		32
60.691	84	84		38
				20 min
Vm 1.109	Tm 81			

$$Vmstd = K_1 Y \frac{Vm\ Pb}{Tm}$$

$$Vmstd = 17.64\ (1.002)\ \frac{(1.109)(29.06)}{(460 + 81)} = 1.053$$

	1st TITRATION	2nd TITRATION	3rd TITRATION	AVERAGE	Vb TITRATION
Vt	9.5	9.5		9.5	—

$$Cso_2 = K_2 \frac{(Vt - Vb)(N)\left(\frac{Vsoln}{Va}\right)}{Vmstd}$$

$$= .00007061\ \frac{(9.5 - 0)(.00937)\left(\frac{100}{20}\right)}{(1.053)} = 29.845 \times 10^{-6}\ Lb/f^3DSTP$$

$$SO_2\ (PPM) = (Cso_2)(6.037)(10^6) = 180$$

$$Lb\ SO_2/Hr = (.371,273 \times 10^6\ f^3/HrDSTP)(29.845 \times 10^{-6}\ Lb/f^3DSTP) = 11.08$$

Cso_2 = Concentration of sulfur dioxide - lb/dry standard cubic foot
N = Normality of barium perclorate titrant
Pbar = Barometric pressure - inches Hg
Tmi = Temperature at meter inlet - °F
Tmo = Temperature at meter outlet - °F
Tm = Average meter temperature - °F
Va = Volume of sample aliquot titrated - ml
Vm = Dry gas volume as measured at meter - dcf
Vm(std) = Vm corrected to standard conditions - dscf
Vsoln = Total volume of sample solution - ml
Vt = Average volume of titrant used for sample aliquot - ml
Vb = Volume of titrant used for blank - ml
Y = Dry gas meter calibration factor
K_1 = 17.64 K_2 = 7.061 X 10^{-5}

CSA CO

EPA METHOD 6 (SULFUR DIOXIDE)

DATA AND CALCULATION SHEET

TEST NO. 1-2 PLANT CRESCENT BRICK DATE 2/29/8

LOCATION NO 2 KILN STACK BY [illegible]

Pbar 29.06

Vm	Tmi	Tmo	ROTOMETER	TIME
60.691	82	82		
60.961	83	83		
61.231	84	84		
61.502	85	85		
61.588	86	86		
Vm .897	Tm 84			

$$Vmstd = K_1 Y \frac{Vm\ Pb}{Tm}$$

$$Vmstd = 17.64\ (1.002)\ \frac{(.897)(29.06)}{(460 + 84)} = .8595$$

	1st TITRATION	2nd TITRATION	3rd TITRATION	AVERAGE	Vb TITRATION
Vt	7.4	7.5	7.5	7.5	0

$$Cso_2 = K_2 \frac{(Vt - Vb)(N)\left(\frac{Vsoln}{Va}\right)}{Vmstd}$$

$$= .00007061\ \frac{(7.5 - 0)(.00937)\left(\frac{100}{20}\right)}{(.8595)} = 28.866 \times 10^{-6}\ Lb/f^3DSTP$$

$$SO_2\ (PPM) = (Cso_2)(6.037)(10^6) = 173$$

$$Lb\ SO_2/Hr = (.371,273 \times 10^6 f^3/HrDSTP)(28.866 \times 10^{-6}\ Lb/f^3DSTP) = 10.71$$

AVERAGE 1-1 & 1-2

PPM = 177 LB/HR = 10.90

Cso_2 = Concentration of sulfur dioxide - lb/dry standard cubic foot
N = Normality of barium perclorate titrant
Pbar = Barometric pressure - inches Hg
Tmi = Temperature at meter inlet - °F
Tmo = Temperature at meter outlet - °F
Tm = Average meter temperature - °F
Va = Volume of sample aliquot titrated - ml
Vm = Dry gas volume as measured at meter - dcf
Vm(std) = Vm corrected to standard conditions - dscf
Vsoln = Total volume of sample solution - ml
Vt = Average volume of titrant used for sample aliquot - ml
Vb = Volume of titrant used for blank - ml
Y = Dry gas meter calibration factor
K_1 = 17.64 $K_2 = 7.061 \times 10^{-5}$

C.S.A. CO. (EPA METHOD 5) DATA SHEET

TEST NO. 2 PLANT: CRESCENT BRICK DATE 1/29/88
LOCATION NO KILN STACK BY [illegible]
BAROMETER 29.06 AMBIENT TEMP ASSUMED MOISTURE 5
MODULE NO. 2031 PROBE NO. 2-4 FILTER NO. HEATER NO. 4 NOZZLE DIA. .252

TEST POINT	METER VOLUME (Vm)	METER TEMP (Tm) IN	METER TEMP (Tm) OUT	COND TEMP °F	FILTER HEATER TEMP °F	STACK TEMP °F (Ts)	STACK PRESS (Ps)	VACUUM IN. Hg	ORIFICE (ΔH)(Pm) IN. H_2O	VEL HEAD (ΔP)	TIME
1	776.3	82	82	76	250	409	-.1	5+	.85	.35	12:15
1	777.6	83	82	66	250	409		5+	.95	.35	
2	779.3	84	82	56	245	409		6+	1.1	.41	20
3	782.5	88	84	56	250	410		6+	1.0	.38	
4	783.8	88	82	56	250	410		6+	1.0	.38	25
5	784.2	90	82	56	250	410		6-	.90	.33	
6	785.3	90	82	56	250	410		5+	.85	.31	30
7	787.6	92	83	54	250	410		5+	.85	.31	
8	788.3	93	84	54	245	411		5+	.87	.32	35
9	789.0	93	84	54	250	410		5+	.85	.31	
10	790.3	93	84	54	250	410		5+	.85	.31	40
11	791.5	93	84	54	250	410		5+	.85	.31	
12	792.6	94	84	54	245	412		5+	.85	.31	45
1	792.6	86	84	58	250	411		6+	1.1	.39	55
1	795.4	90	84	54	250	411		6+	1.1	.39	
2	797.1	92	85	54	245	411		6+	1.1	.38	13:00
3	798.3	93	85	54	250	412		5+	.97	.35	
4	799.6	93	85	52	250	412		5+	.91	.33	05
5	800.9	94	85	52	250	412		5+	.89	.32	
6	802.3	94	85	53	250	412		5+	.85	.31	10
7	803.6	96	86	53	250	412		5+	.85	.31	
8	804.7	96	86	53	250	412		5+	.83	.31	15
9	806.4	96	86	53	250	412		5+	.85	.31	
10	807.6	96	86	80	250	412		5+	.85	.31	20
11	808.9	96	87	86	250	412		5+	.83	.30	
12	810.2	96	88	42	245	412		5+	.83	.30	25
	776.3										
TOTAL	33.9	91.6	84.3								
AVERAGE		88		~	~	411	-.1	MAX 6½	.916	.331	60 MIN

ORSAT DATA N_2= 80.7

TIME	INTEGRATED				AVG
CO2		3.0	3.0	3.0	3.0
O2		16.3	16.3	16.3	16.3
CO					

CONDESATE COLLECTED

	FINAL	INITIAL	TOTAL
DRIERITE	978.0	973.0	5.0
IMPINGER	232	200	32.0
GRAND TOTAL (Vlw)			37.0

FILTER WEIGHT		PROBE WASH WT	IMPINGER WASH WT
GROSS	.6924	182.8207	194.9682
TARE	.6472	182.8107	194.9670
NET	.0452	.0100	.0082

LEAK RATE @ 10 "Hg = <.01

AVERAGE $\sqrt{\Delta P}$ = .5749

TOTAL PARTICULATE WEIGHT (Mn) 63.4 mg | STACK AREA (As) 4.5 FT²

E.P.A. Method 5

DATA INPUT

Pb,In Hg	Barometer	29.06
VM,ft3	Meter Volume	33.9
ΔH,In H2O	Orifice Differential	.916
PG,In H2O	Stack Static Pressure	-.1
Tm,F	Meter Temperature	88
Ts,F	Stack Temperature	411
CP	Pitot Coefficient	.84
$\sqrt{\Delta P}$,In H2O	Average Square Root Of Delta P	.5749
% CO2	Carbon Dioxide	3
% O2	Oxygen	16.3
% N	Nitrogen	80.7
VCL,Ml	Volume Of Condensate	37
AS,ft2	Stack Area	4.5
MN,Mg	Total Particulate Catch Weight	63.4
Ø,Min	Test Time	60
DN,In	Diameter Of Nozzle	.252

RESULTS

Pma,In Hg	Absolute Meter Pressure	29.13
PSA,In Hg	Absolute Stack Pressure	29.05
MD	Molecular Weight Dry Gas	29.13
MS	Molecular Weight @ Stack Conditions	28.55
VMSTP,ft3	VM Standard Temp.& Press. Dry	31.83
VWSTP,ft3	VM Standard Temp.& Press. Wet	1.75
BWO,%	Moisture	5.22
I,%	Isokinetic Variation	108.23
VS,ft/Sec	Stack Velocity	42.30
QA,ACFM	Stack Gas Flow (Actual)	11421
QS,ft3/Hr	Stack Gas Flow (Dry STP)	383749
L,#/Hr	Emission Rate	1.69
CS,#/SCF	Particulate Emission	4.39212E-06
C''S,Grn/SCF	Particulate Emission	0.0307

CRESCENT BRICK COMPANY INC
EAST CANTON OH
NO 2 KILN STACK
2/29/88
TEST NO 2

CSA CO

EPA METHOD 6 (SULFUR DIOXIDE)

DATA AND CALCULATION SHEET

TEST NO. 2-1 PLANT CRESCENT BRICK DATE 2/24/87

LOCATION NO 2 KILN STACK BY [illegible]

Pbar 29.06

Vm	Tmi	Tmo	ROTOMETER	TIME
61.588	75	75	4	12:18
61.782	76	76		23
61.976	77	77		28
62.170	78	78		33
62.364	80	80		38
				20 MIN
Vm .776	Tm 77			

$$Vmstd = K_1 Y \frac{Vm\ Pb}{Tm}$$

$$Vmstd = 17.64\ (1.002)\ \frac{(.776)(29.06)}{(460 + 77)} = .7327$$

	1st TITRATION	2nd TITRATION	3rd TITRATION	AVERAGE	Vb TITRATION
Vt	8.0	8.1		8.05	0

$$Cso_2 = K_2 \frac{(Vt - Vb)(N)\left(\frac{Vsoln}{Va}\right)}{Vmstd}$$

$$= .00007061\ \frac{(8.05 - 0)(.00937)\left(\frac{100}{20}\right)}{(.7327)} = 36.345 \times 10^{-6}\ Lb/f^3DSTP$$

$$SO_2\ (PPM) = (Cso_2)(6.037)(10^6) = 219$$

$$Lb\ SO_2/Hr = (.383749 \times 10^6\ f^3/HrDSTP)(36.345 \times 10^{-6}\ Lb/f^3DSTP) = 13.947$$

Cso2 = Concentration of sulfur dioxide - lb/dry standard cubic foot
N = Normality of barium perclorate titrant
Pbar = Barometric pressure - inches Hg
Tmi = Temperature at meter inlet - °F
Tmo = Temperature at meter outlet - °F
Tm = Average meter temperature - °F
Va = Volume of sample aliquot titrated - ml
Vm = Dry gas volume as measured at meter - dcf
Vm(std) = Vm corrected to standard conditions - dscf
Vsoln = Total volume of sample solution - ml
Vt = Average volume of titrant used for sample aliquot - ml
Vb = Volume of titrant used for blank - ml
Y = Dry gas meter calibration factor
K_1 = 17.64 $K_2 = 7.061 \times 10^{-5}$

CSA CO

EPA METHOD 6 (SULFUR DIOXIDE)

DATA AND CALCULATION SHEET

TEST NO. 2-2 PLANT CRESCENT BRICK DATE 2/29/80

LOCATION NO 2 KILN STACK BY RCK

Pbar 29.06

Vm	Tmi	Tmo	ROTOMETER	TIME
62.364	76	76	4	13:00
62.567	78	78		05
62.788	79	79		10
62.994	81	81		15
63.200	82	82		20
				20
Vm .836	Tm 79			

$$Vmstd = K_1 Y \frac{Vm\ Pb}{Tm}$$

$$Vmstd = 17.64\ (1.002)\ \frac{(.836)(29.06)}{(460 + 79)} = .7958$$

	1st TITRATION	2nd TITRATION	3rd TITRATION	AVERAGE	Vb TITRATION
Vt	9.4	9.4		9.4	0

$$Cso_2 = K_2 \frac{(Vt - Vb)(N)\left(\frac{Vsoln}{Va}\right)}{Vmstd}$$

$$= .00007061\ \frac{(9.4 - 0)(.00937)\left(\frac{100}{20}\right)}{(.7958)} = 39.075 \times 10^{-6}\ Lb/f^3DSTP$$

$$SO_2\ (PPM) = (Cso_2)(6.037)(10^6) = 236$$

$$Lb\ SO_2/Hr = (.3837749 \times 10^6\ f^3/HrDSTP)(39.075 \times 10^{-6}\ Lb/f^3DSTP) = 14.99$$

AVERAGE 2-1 & 2-2

PPM 228 LB/HR 14.47

Cso_2 = Concentration of sulfur dioxide - lb/dry standard cubic foot
N = Normality of barium perclorate titrant
Pbar = Barometric pressure - inches Hg
Tmi = Temperature at meter inlet - °F
Tmo = Temperature at meter outlet - °F
Tm = Average meter temperature - °F
Va = Volume of sample aliquot titrated - ml
Vm = Dry gas volume as measured at meter - dcf
Vm(std) = Vm corrected to standard conditions - dscf
Vsoln = Total volume of sample solution - ml
Vt = Average volume of titrant used for sample aliquot - ml
Vb = Volume of titrant used for blank - ml
Y = Dry gas meter calibration factor
K_1 = 17.64 K_2 = 7.061×10^{-5}

C.S.A. CO. (EPA METHOD 5) DATA SHEET

TEST NO. 3 PLANT CRESCENT BRICK DATE 2/29/81

LOCATION No 2 KILN STACK BY [illegible]

BAROMETER 29.06 AMBIENT TEMP ASSUMED MOISTURE 5

MODULE NO. 2031 PROBE NO. 3-4 FILTER NO. HEATER NO.5 NOZZLE DIA.

TEST POINT	METER VOLUME (Vm)	METER TEMP(Tm) IN	OUT	COND TEMP °F	FILTER HEATER TEMP °F	STACK TEMP °F(Ts)	STACK PRESS (Ps)	VACUUM IN. Hg	ORIFICE (ΔH)(Pm) IN.H_2O	VEL HEAD (ΔP)	TIME
1	810.4	82	82	70	250	409	-.1	5 1/2	1.2	.42	14:30
1	812.1	83	82	65	250	408		5 1/2	1.2	.42	
2	813.6	85	82	60	250	408		5 1/2	1.2	.42	35
3	815.0	88	82	55	250	408		5 1/2	1.2	.42	
4	816.5	88	82	52	245	408		5+	1.0	.36	40
5	818.0	90	82	52	250	408		5+	.97	.35	
6	819.3	90	82	50	250	408		5+	.91	.33	45
7	820.6	91	83	50	245	408		5+	.89	.32	
8	821.8	92	84	48	250	408		5+	.89	.32	50
9	823.2	92	84	48	250	408		5+	.89	.32	
10	824.5	93	84	48	250	408		5+	.89	.32	55
11	826.0	94	84	48	245	409		5+	.86	.31	
12	827.4	94	84	48	250	409		5+	.86	.31	15:00
1	827.4	88	85	48	250	411		6-	1.2	.40	05
1	828.9	91	85	48	250	411		6-	1.2	.40	
2	830.2	94	86	48	245	411		6-	1.2	.40	10
3	831.7	94	86	48	245	411		5+	.97	.35	
4	833.2	94	86	48	250	411		5+	.97	.35	15
5	834.5	94	86	48	250	411		5+	.89	.32	
6	835.9	96	88	46	245	411		5+	.94	.34	20
7	837.2	96	88	48	245	411		5+	.94	.34	
8	838.6	96	88	48	250	412		5+	.94	.34	25
9	840.1	96	88	48	250	412		5+	.87	.32	
10	841.7	96	88	50	245	412		5+	.86	.31	30
11	842.6	96	88	50	250	412		5+	.86	.31	
12	844.0	96	88	50	250	412		5+	.86	.31	35
	810.4										
TOTAL	33.6	91.9	84.9								
AVERAGE		88		~	~	410	-.1	MAX 6	.99	.345	60 MIN

ORSAT DATA N_2= 80.9

TIME						AVG
CO2		2.4	2.4	2.4		2.4
O2		16.7	16.7	16.7		16.7
CO						

CONDESATE COLLECTED

	FINAL	INITIAL	TOTAL
DRIERITE	964	962.5	1.5
IMPINGER	230	200	30.0
GRAND TOTAL (Vlw)			31.5

FILTER WEIGHT	PROBE WASH WT	IMPINGER WASH WT
GROSS .6929	191.4531	174.6998
TARE .6443	191.4431	174.6936
NET .0486	.0100	.0062

LEAK RATE @ 10 "Hg = <.01

AVERAGE $\sqrt{\Delta P}$ = .5869

TOTAL PARTICULATE WEIGHT (Mn) 64.8 mg | STACK AREA(As) 4.5 FT2

35.8 Tons/Hr

E.P.A. Method 5

DATA INPUT

Pb,In Hg	Barometer	29.06
VM,ft3	Meter Volume	33.6
ΔH,In H2O	Orifice Differential	.99
PG,In H2O	Stack Static Pressure	-.1
Tm,F	Meter Temperature	88
Ts,F	Stack Temperature	410
CP	Pitot Coefficient	.84
√ΔP,In H2O	Average Square Root Of Delta P	.5869
% CO2	Carbon Dioxide	2.4
% O2	Oxygen	16.7
% N	Nitrogen	80.9
VCL,Ml	Volume Of Condensate	31.5
AS,ft2	Stack Area	4.5
MN,Mg	Total Particulate Catch Weight	64.8
Ø,Min	Test Time	60
DN,In	Diameter Of Nozzle	.251

RESULTS

Pma,In Hg	Absolute Meter Pressure	29.13
PSA,In Hg	Absolute Stack Pressure	29.05
MD	Molecular Weight Dry Gas	29.05
MS	Molecular Weight @ Stack Conditions	28.55
VMSTP,ft3	VM Standard Temp.& Press. Dry	31.55
VWSTP,ft3	VM Standard Temp.& Press. Wet	1.49
BWO,%	Moisture	4.52
I,%	Isokinetic Variation	105.08
VS,ft/Sec	Stack Velocity	43.16
QA,ASCFM	Stack Gas Flow (Actual)	11652
QS,ft3/Hr	Stack Gas Flow (Dry STP)	394880
L,#/Hr	Emission Rate	1.79
CS,#/SCF	Particulate Emission	4.52919E-06
C''S,Grn/SCF	Particulate Emission	0.0316

CRESCENT BRICK COMPANY INC
EAST CANTON OH
NO 2 KILN STACK
2/29/88
TEST NO 3

CSA CO

EPA METHOD 6 (SULFUR DIOXIDE)

DATA AND CALCULATION SHEET

TEST NO. 3-1 PLANT CRESCEN BRICK DATE 2/29/88

LOCATION NO 2 KILN STACK BY [illegible]

Pbar 29.06

Vm	Tmi	Tmo	ROTOMETER	TIME
63.200	74	74	4	14:31
63.465	75	75		36
63.742	76	76		41
64.018	78	78		46
64.295	79	79		51
Vm 1.095	Tm 76			

$$Vmstd = K_1 Y \frac{Vm\ Pb}{Tm}$$

$$Vmstd = 17.64\ (1.002)\ \frac{(1.095)(29.06)}{(460 + 76)} = 1.050$$

	1st TITRATION	2nd TITRATION	3rd TITRATION	AVERAGE	Vb TITRATION
Vt	9.0	9.0		9.0	0

$$Cso_2 = K_2 \frac{(Vt - Vb)(N)\left(\frac{Vsoln}{Va}\right)}{Vmstd}$$

$$= .00007061 \frac{(9.0 - \quad)(0\quad)\left(\frac{100}{20}\right)}{(1.050)} = 28.355 \times 10^{-6}\ Lb/f^3DSTP$$

$$SO_2\ (PPM) = (Cso_2)(6.037)(10^6) = 171$$

$$Lb\ SO_2/Hr = (.394,860 \times 10^6\ f^3/HrDSTP)(28.355 \times 10^{-6}\ Lb/f^3DSTP) = 11.196$$

Cso_2 = Concentration of sulfur dioxide - lb/dry standard cubic foot
N = Normality of barium perclorate titrant
Pbar = Barometric pressure - inches Hg
Tmi = Temperature at meter inlet - °F
Tmo = Temperature at meter outlet - °F
Tm = Average meter temperature - °F
Va = Volume of sample aliquot titrated - ml
Vm = Dry gas volume as measured at meter - dcf
Vm(std) = Vm corrected to standard conditions - dscf
Vsoln = Total volume of sample solution - ml
Vt = Average volume of titrant used for sample aliquot - ml
Vb = Volume of titrant used for blank - ml
Y = Dry gas meter calibration factor
K_1 = 17.64 K_2 = 7.061 X 10^{-5}

CSA CO

EPA METHOD 6 (SULFUR DIOXIDE)

DATA AND CALCULATION SHEET

TEST NO. 3-2 PLANT CRESCENT BRICK DATE 2/29/80

LOCATION NO 2 KILN STACK BY ECK

Pbar 29.06

Vm	Tmi	Tmo	ROTOMETER	TIME
64.295	76	76	4	15:07
64.450	77	77		12
64.703	78	78		17
64.955	80	80		22
65.207	82	82		27
				20 MIN
	79	79		
Vm .912	Tm 79			

$$Vmstd = K_1 Y \frac{Vm\ Pb}{Tm}$$

$$Vmstd = 17.64\ (1.002)\ \frac{(.912)(29.06)}{(460 + 79)} = .869$$

	1st TITRATION	2nd TITRATION	3rd TITRATION	AVERAGE	Vb TITRATION
Vt	10.1	10.1		10.1	0

$$Cso_2 = K_2 \frac{(Vt - Vb)(N)\left(\frac{Vsoln}{Va}\right)}{Vmstd}$$

$$= .00007061\ \frac{(10.1 - 0)(.00937)\left(\frac{100}{20}\right)}{(.869)} = 38.448 \times 10^{-6}\ Lb/f^3DSTP$$

$$SO_2\ (PPM) = (Cso_2)(6.037)(10^6) = 232$$

$$Lb\ SO_2/Hr = (.394880 \times 10^6\ f^3/HrDSTP)(34.448 \times 10^{-6}\ Lb/f^3DSTP) = 15.18$$

AVERAGE 3-1 & 3-2

PPM 202 LB/HR 13.57

Cso_2 = Concentration of sulfur dioxide - lb/dry standard cubic foot
N = Normality of barium perclorate titrant
Pbar = Barometric pressure - inches Hg
Tmi = Temperature at meter inlet - °F
Tmo = Temperature at meter outlet - °F
Tm = Average meter temperature - °F
Va = Volume of sample aliquot titrated - ml
Vm = Dry gas volume as measured at meter - dcf
Vm(std) = Vm corrected to standard conditions - dscf
Vsoln = Total volume of sample solution - ml
Vt = Average volume of titrant used for sample aliquot - ml
Vb = Volume of titrant used for blank - ml
Y = Dry gas meter calibration factor
K_1 = 17.64 $K_2 = 7.061 \times 10^{-5}$

APPENDIX II

Agency Use Only
Date Received _____
No. Assigned _____
Permit No. _____

INTENT TO TEST NOTIFICATION

Proposed Test Date FEB 28, [illegible]
Pre-Test Meeting Desired? Yes / / No / /

A. Facility Information

Name CRESCENT BRICK CO

Address 6878 OSNABURG S.E., EAST CANTON, OH 44730

Contact Person PARYL WATKINS

Telephone Number (216) 488-1226

B. Testing Firm Information

Name CSA CO. (CUSTOM STACK ANALYSIS)

Address 24385 CENTER ROAD, ALLIANCE, OH 44601

Contact Person ERNIE KOLM

Telephone Number (216) 525-5119

C. Source Sampling Information: Identify all sources and pollutants to be sampled.

Source	Control Equipment	Monitoring Equipment	Pollutant to be Tested	EPA Test Method	Filter Box Temperature	Number of Sampling Points	Total Time for Test Run	Number of Sampling Runs
KILN	NONE	NONE	PARTICULATE	5	250	20	60	3
"	"	"	SO_2	6	NA	2	20 MIN	6

Any modifications to USEPA Reference Method(s)? Yes / / No /✓/; If yes explain _____

Sampling Location(s): Inlet / / Outlet /✓/ Simultaneous / / Will cyclonic flow check(s) be conducted? Yes / / No /✓/

Fuel Sampling: Coal - Proximate / / Ultimate / / Other (specify) NA

Emission Rate to be calculated using: F-Factor / / Ultimate Coal Analysis / / Other (specify) _____

Are concurrent Method 9 readings to be performed? Yes / / No / /

D. Sample Train Calibration: All affected measuring and metering equipment should be calibrated within 60 days of the scheduled testing.

22

CSA COMPANY

CUSTOM STACK ANALYSIS
24661 CENTER ROAD
P.O. BOX 3750
ROUTE 5
ALLIANCE, OHIO 44601

GENERAL

Source emission tests will be performed at CRESCENT BRICK CO _____ on _____ with testing to commence at about 9100 O'clock ✓ AM _____ PM as per INTENT TO TEST NOTIFICATION.

The sample train is a Research Appliance Corp modle 2043 using a PYREX lined probe heated to 250 °F. The filter media is A-E FIBERGLASS enclosed in pyrex holders heated to 250 °F. The contents of the impingers will be used for (a) _____ moisture determination only, (b) ✓ moisture determination and particulate weight. The gas drying agent after the impingers is calcium sulfate contained in a "Drierite" desicant column. The probe and glassware will be washed using ACETONE & BRUSH. If impinger contents are used as part of the particulate weight, they will be dried by OVEN at 90 °C. The test and analytical procedures used are as per latest FEDERAL EPA REGULATIONS AS WRITTEN IN THE FEDERAL REGISTER.

_____ An equivalent emissions opacity test is requested

DESCRIPTION OF PLANT OPERATION

CONTINUOUS TYPE BRICK KILN

STACK AND VENT DESCRIPTION

SEE FIGURE 1a & 1b

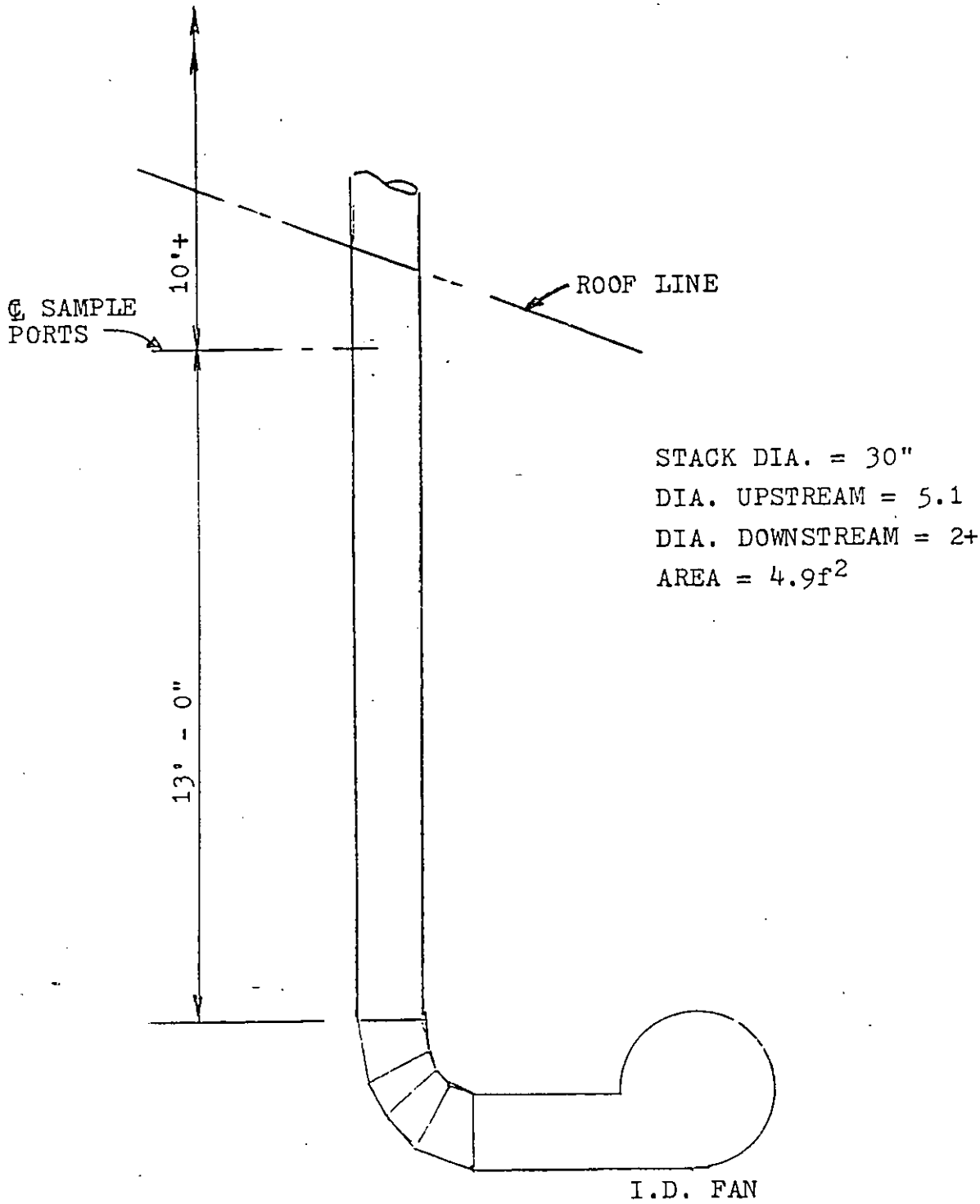

SAMPLE PORT LOCATION

FIGURE 1a

Sample Points For Round Ducts

Diameter of duct in inches = 30
Area = 4.90874
Radius = 15
Total No. Of Points = 20

(1)- 4.74342
(2)- 8.21584
(3)- 10.6066
(4)- 12.5499
(5)- 14.2303

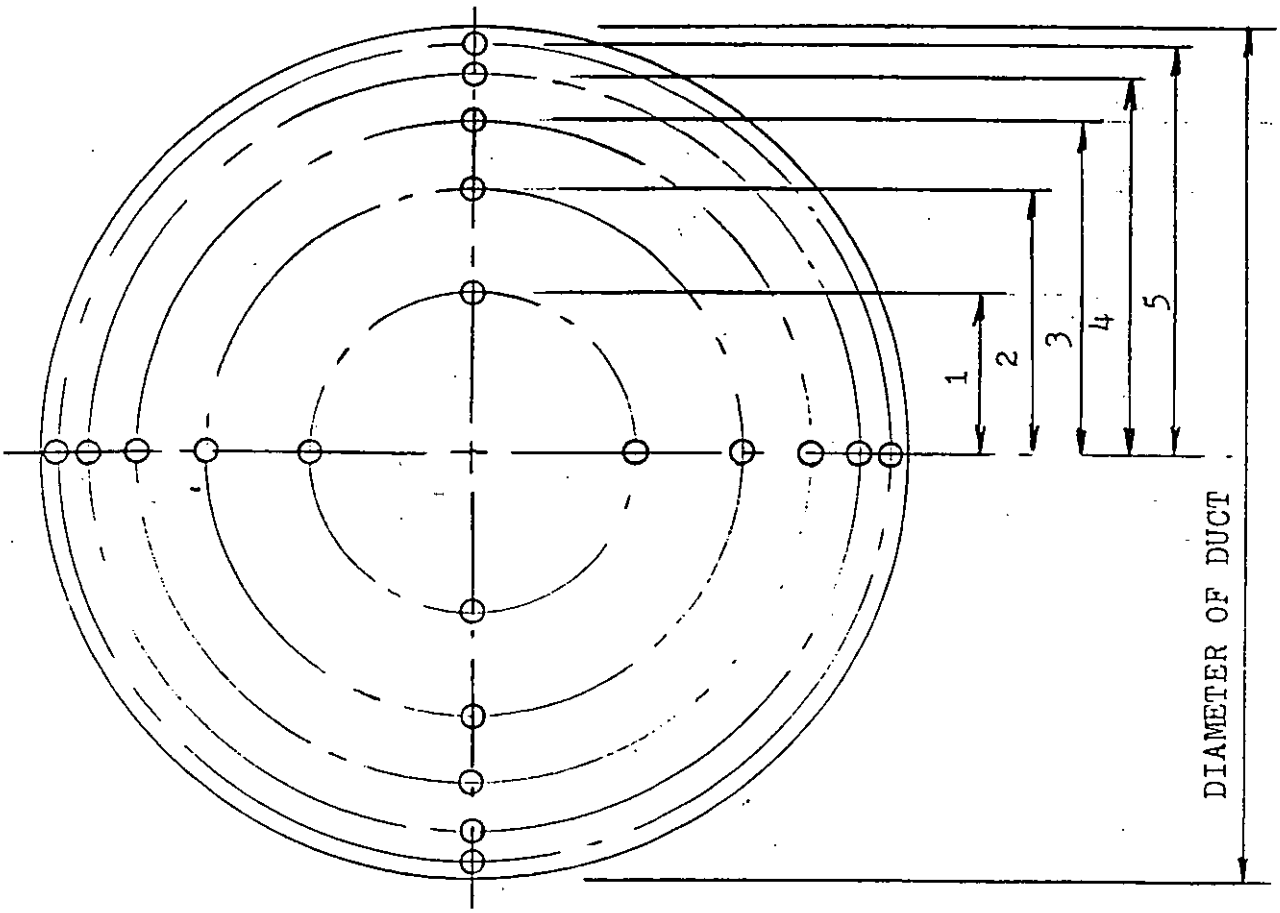

SAMPLE POINT LOCATION

FIGURE 1b

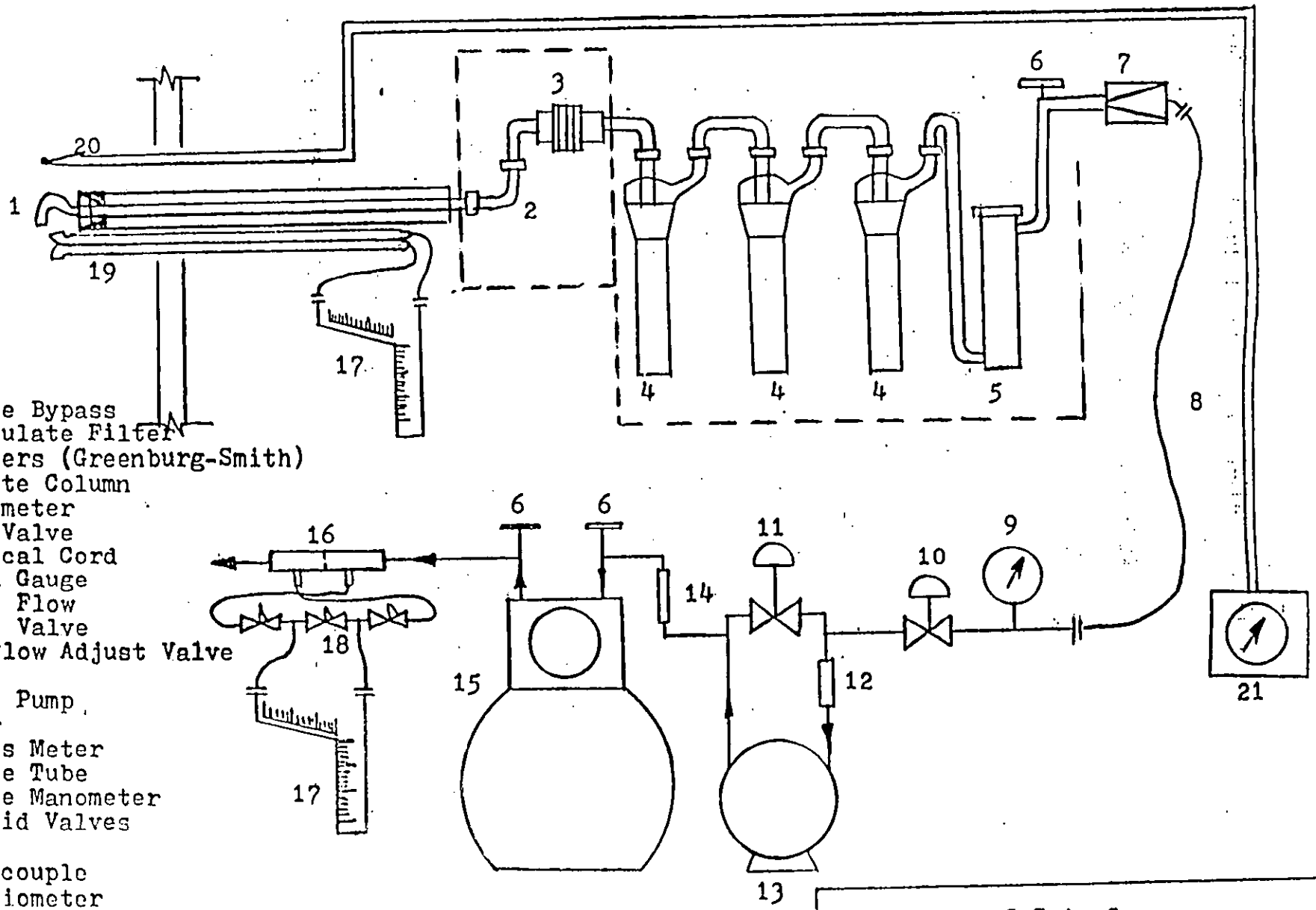

1) Probe
2) Cyclone Bypass
3) Particulate Filter
4) Impingers (Greenburg-Smith)
5) Drierite Column
6) Thermometer
7) Check Valve
8) Umbilical Cord
9) Vacuum Gauge
10) Course Flow Adjust Valve
11) Fine Flow Adjust Valve
12) Oiler
13) Vacuum Pump
14) Filter
15) Dry Gas Meter
16) Orifice Tube
17) Incline Manometer
18) Solenoid Valves
19) Pitot
20) Thermocouple
21) Potentiometer

C.S.A. Co.
MODIFICATION OF R.A.C. SAMPLE TRA
USING DRIERITE COLUMN IN PLACE OF
IMPINGER DESICANT

Figure 2

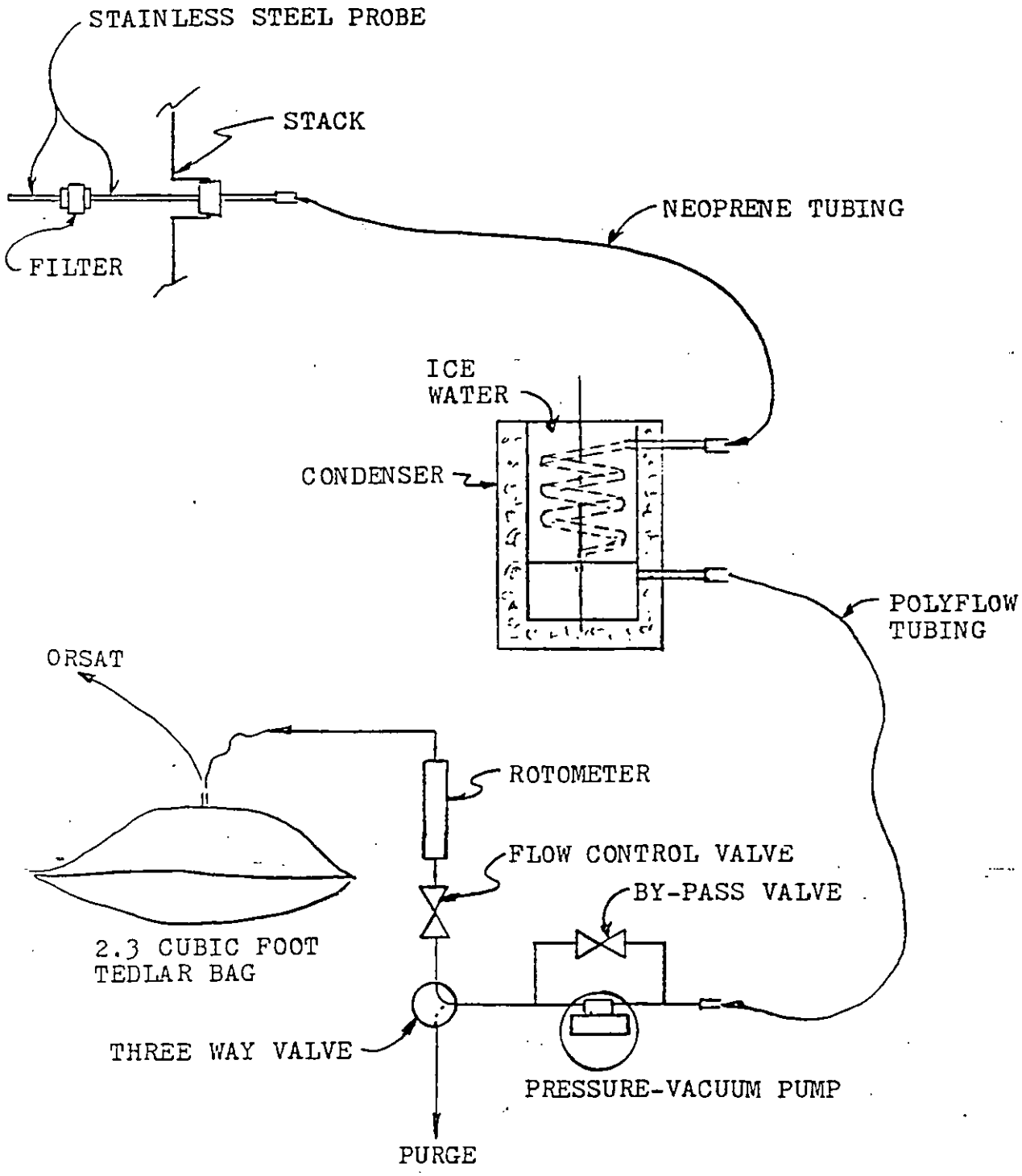

INTEGRATED SAMPLER

FIGURE 4

C.S.A. CO.

STACKSAMPLR CALIBRATION SHEET

Customer _____ Order No. _____

Date JAN. 12, 88 Serial No. 2033 RAC Order No. _____

Pump CLEANED Pump Oil CHANGED Clean Quik Disconnects CLEANED

Manometers NEW FLUID Dry Test Meter — Thermometers OK

Lights ✓ Electrical Check OK Variac OK

Vacuum Gauge OK Leak Check @ 27"Hg Vacuum NO LEAKS

Remarks PRESSURE TEST @ 10" H_2O – NO LEAKS

9 Pb 29.24

Computer Entry Order

1	2	-	3	4	5	-	6	7	8	H	
K	N	ΔH	CFw	CFd	Tw	ITd	OTd	TD avg.	t		
.0158	.0368	0.5	5	5.04	68	81	69	75	12.71	1.840	1.
.0317	.0737	1.0	5	5.05	68	82	69	76	8.98	1.843	1.
.0634	.147	2.0	10	10.13	68	92	71	82	12.72	1.842	1.
.1268	.249	4.0	10	10.15	68	94	74	84	9.01	1.837	1.
.1902	.431	6.0	10	10.12	68	96	75	86	7.34	1.826	1.
.2536	.588	8.0	10	10.11	68	98	76	87	6.40	1.848	1.

Tolerances

H = 1.6-1.84 -2.1

Y = 0.99 -1.00-1.01

$$H = \frac{K}{Pb\,(OTd + 460)} \times \left[\frac{(Tw + 460)\,t}{CFw}\right]^2$$

H = 1.839

Y = 1.006

$$Y = \frac{CFw\ \ Pb\ \ (Td\ avg + 460)}{CFd\ \ (Pb + N)\ (Tw + 460)}$$

ΔH= Orifice pressure drop-in. H_2O

CFw= Volume wet test meter - f^3

CFd= Volume dry test meter - f^3

Tw= Temp wet test meter

ITd= Inlet temperature dry test meter

OTd=Outlet temperature dry test meter

Td Avg.=Average temperature dry test meter

t= Time-minutes

Pb= Barometer press

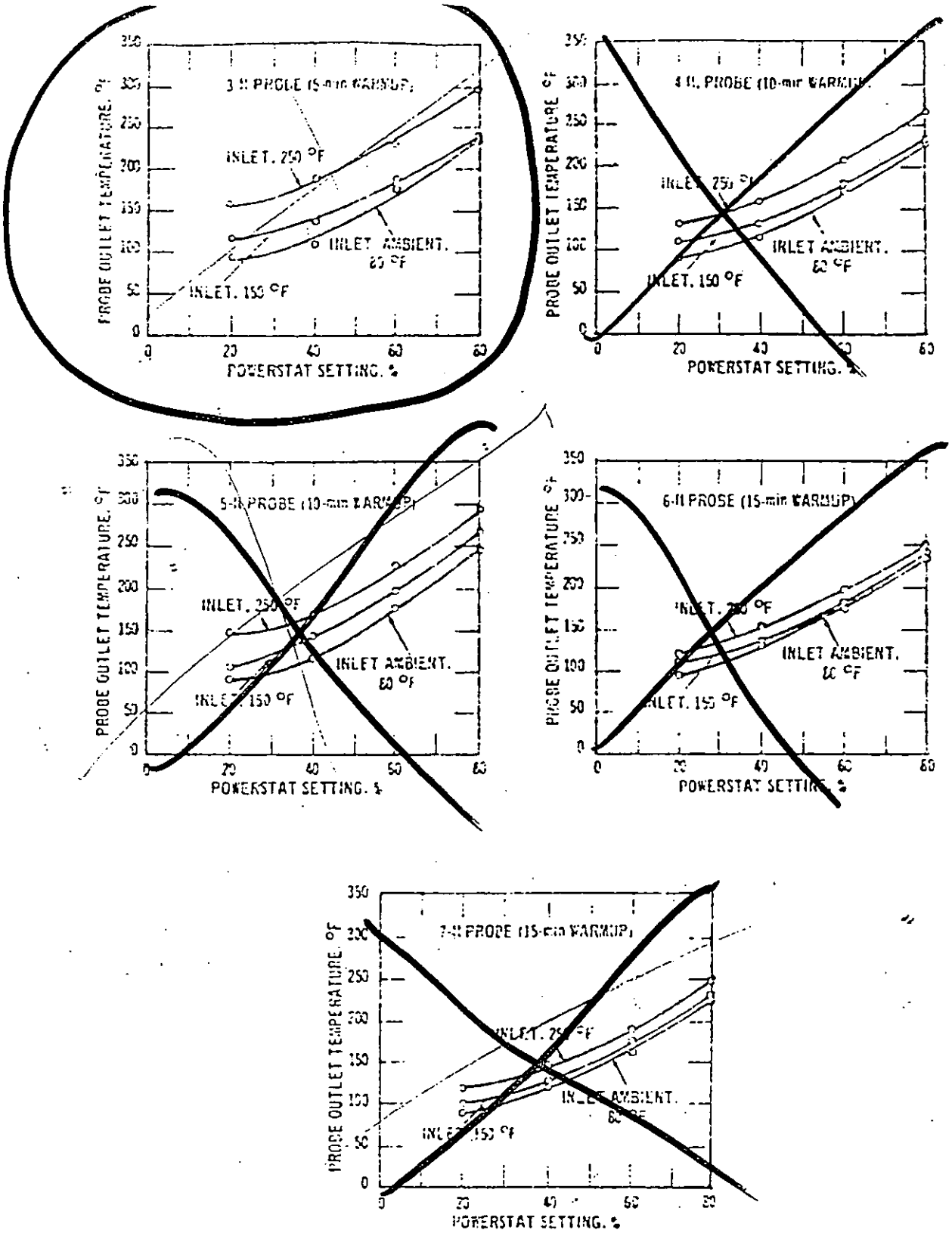

NOTE: Flow rate held constant at 0.75; 50% change in flow rate has little effect on probe temperature.

Figure 16

Probe Temperatures

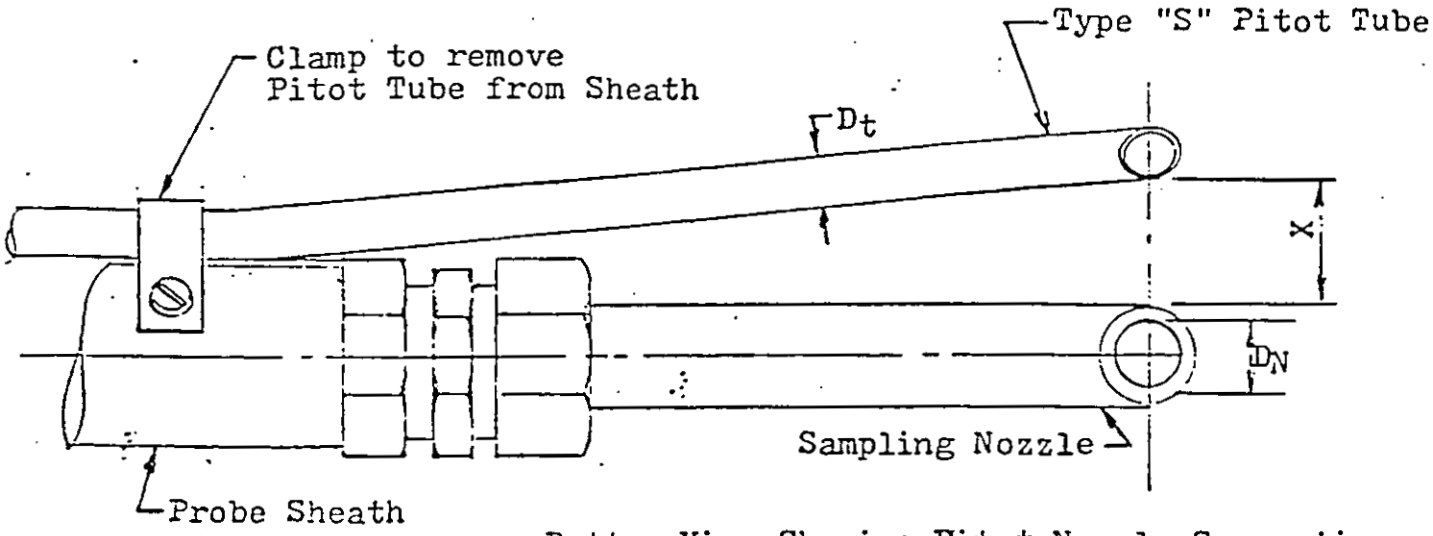

Bottom View Showing Pitot-Nozzle Separation

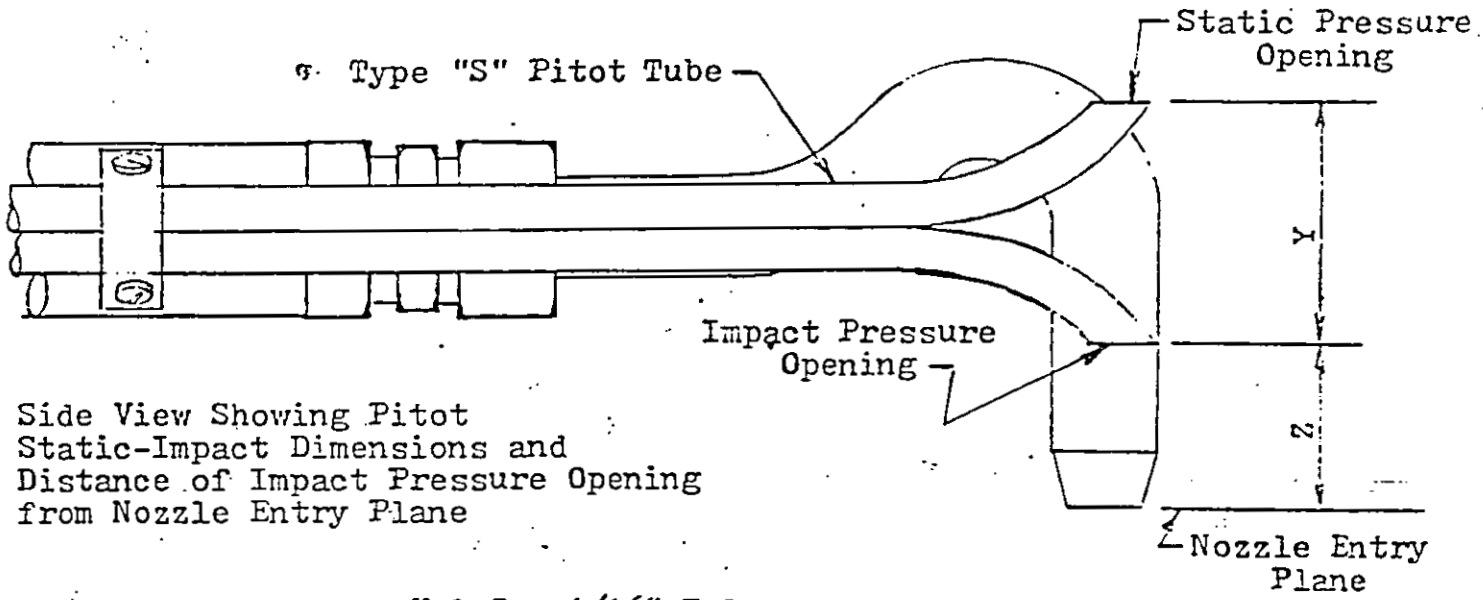

Side View Showing Pitot
Static-Impact Dimensions and
Distance of Impact Pressure Opening
from Nozzle Entry Plane

X & Z 1/16" Tolerance

D_N - Inches (Nominal)	X	Y	Z	D_t
3/16	1	1 7/16	5/16	3/8
1/4	15/16	1 7/16	5/16	3/8
5/16	7/8	1 7/16	5/16	3/8
3/8	3/4	1 7/16	5/16	3/8
1/2	5/8	1 7/16	1/2	3/8

PITOT TUBE INTERFERENCE DIMENSIONS

C.S.A. CO. (EPA METHOD 5) DATA SHEET

TEST NO.	PLANT	DATE
LOCATION		BY
BAROMETER	AMBIENT TEMP	ASSUMED MOISTURE
MODULE NO. PROBE NO.	FILTER NO. HEATER NO.	NOZZLE DIA.

TEST POINT	METER VOLUME (Vm)	METER TEMP(Tm) IN	OUT	COND TEMP °F	FILTER HEATER TEMP °F	STACK TEMP °F(Ts)	STACK PRESS (Ps)	VACUUM IN. Hg	ORIFICE (ΔH)(Pm) IN.H_2O	VEL HEAD (ΔP)	TIME
TOTAL											
AVERAGE											

ORSAT DATA	N_2=					
TIME						
CO2						
O2						
CO						

CONDESATE COLLECTED	FINAL	INITIAL	TOTAL
DRIERITE			
IMPINGER			
GRAND TOTAL (Vlw)			

FILTER WEIGHT	PROBE WASH WT	IMPINGER WASH WT
GROSS		
TARE		
NET		

LEAK RATE @ "Hg =

AVERAGE$\sqrt{\Delta P}$ =

TOTAL PARTICULATE WEIGHT (Mn) mg | STACK AREA(As) FT2

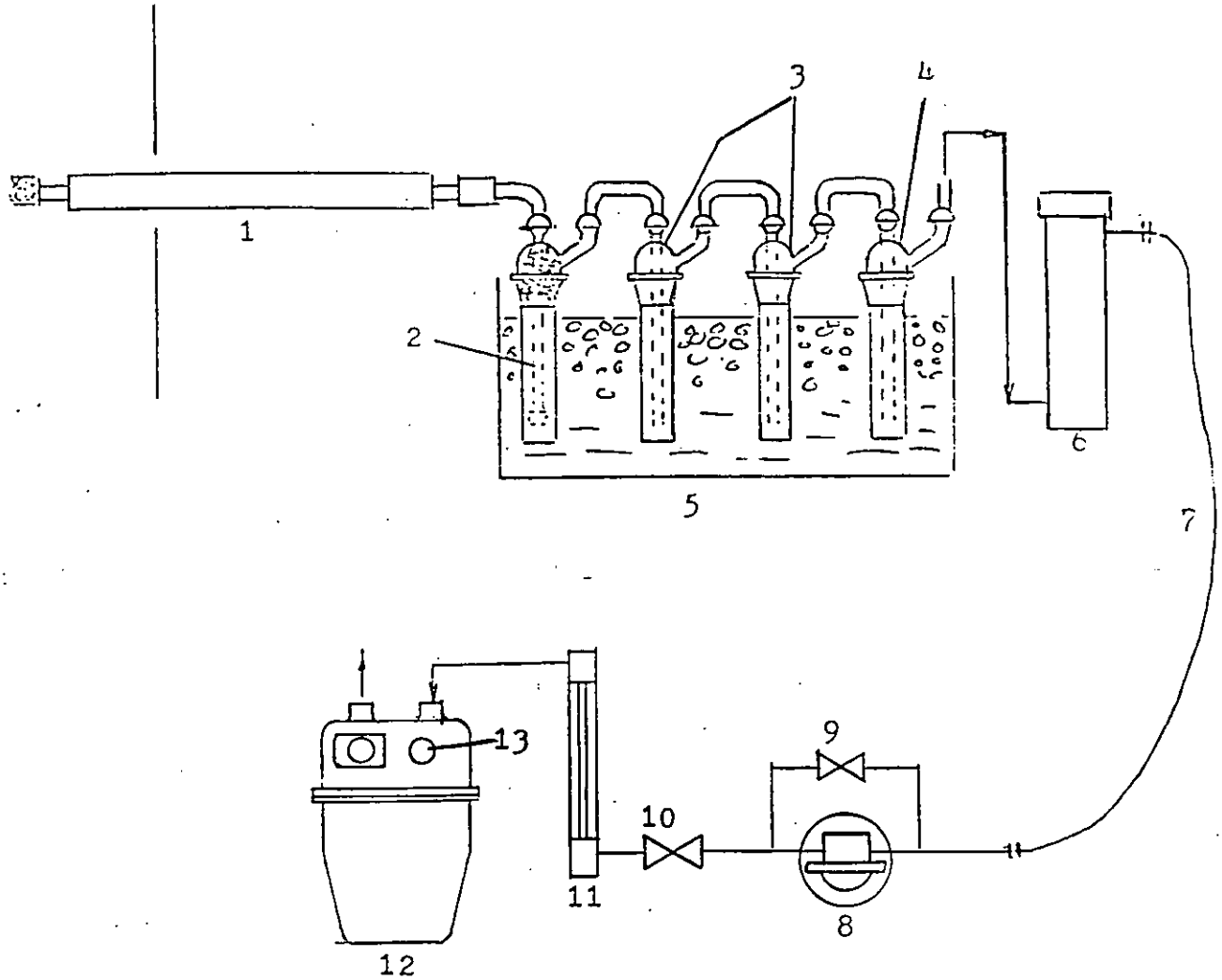

1) HEATED PYREX LINED PROBE. END PAKED WITH QUARTZ WOOL
2) MIDGET BUBBLER. TOP PACKED WITH GLASS WOOL. 15ml ISOPROPANOL (80%)
3) MIDGET IMPINGER. 15 ml H_2O_2 (3%)
4) MIDGET IMPINGER. DRY TRAP
5) ICE. BATH
6) DRIERITE COLMN. FILLED WITH CALCIUM SULFATE DESICANT
7) UMBILICAL CORD
8) VACUUM-PRESSURE PUMP
9) BYPASS VALVE
10) CONTROL VALVE
11) ROTOMETER
12) DRY GAS TEST METER
13) THERMOMETER

EPA METHOD 6 SAMPLING APPARATUS

FIGURE

U.S.A. CO.

EPA METHOD 6 (SULFUR DIOXIDE)

DATA AND CALCULATION SHEET

TEST NO._____ PLANT_____ DATE_____

LOCATION_____ BY_____

Vm	Tmi	Tmo	ROTOMETER	TIME
Vm	Tm			

Pbar_____

$$Vmstd = K_1 Y \frac{Vm\ Pb}{Tm}$$

$$Vmstd = 17.64 (\quad) \frac{(\quad)(\quad)}{(460 + \quad)} = \_\_\_\_\_$$

	1st TITRATION	2nd TITRATION	3rd TITRATION	AVERAGE	Vb TITRATIO
Vt					

$$Cso_2 = K_2 \frac{(Vt - Vb)(N)\left(\frac{Vsoln}{Va}\right)}{Vmstd}$$

$$= .00007061 \frac{(\quad - \quad)(\quad)(\_\_\_\_\_)}{(\quad)} = \_\_\_\_\_ Lb/f^3DS$$

$$SO_2\ (PPM) = (Cso_2)(6.037)(10^6) = \_\_\_\_\_$$

$$Lb\ SO_2/Hr = (\qquad f^3/HrDSTP)(\qquad Lb/f^3DSTP) = \_\_\_\_\_$$

Lb/MBTU =_____ Lb/Hr - _____ MBTU = _____

Cso_2 = Concentration of sulfur dioxide - lb/dry standard cubic foot
N = Normality of barium perclorate titrant
Pbar = Barometric pressure - inches Hg
Tmi = Temperature at meter inlet - °F
Tmo = Temperature at meter outlet - °F
Tm = Average meter temperature - °F
Va = Volume of sample aliquot titrated - ml
Vm = Dry gas volume as measured at meter - dcf
Vm(std) = Vm corrected to standard conditions - dscf
Vsoln = Total volume of sample solution - ml
Vt = Average volume of titrant used for sample aliquot - ml
Vb = Volume of titrant used for blank - ml
Y = Dry gas meter calibration factor
K_1 = 17.64 $K_2 = 7.061 \times 10^{-5}$