Note: This is a reference cited in *AP 42, Compilation of Air Pollutant Emission Factors, Volume I Stationary Point and Area Sources.* AP42 is located on the EPA web site at www.epa.gov/ttn/chief/ap42/

The file name refers to the reference number, the AP42 chapter and section. The file name "ref02_c01s02.pdf" would mean the reference is from AP42 chapter 1 section 2. The reference may be from a previous version of the section and no longer cited. The primary source should always be checked.

AP42 Section: 11.2

Reference: 8

Title: Air Pollution Emission Test, Celotex Corporation, Los Angeles, California,

EMB Report No. 75-ARM-8,

U. S. Environmental Protection Agency, Research Triangle Park, NC,

August 1976.

EXTRA COPY

REPORT NUMBER 75-ARM-8

10429

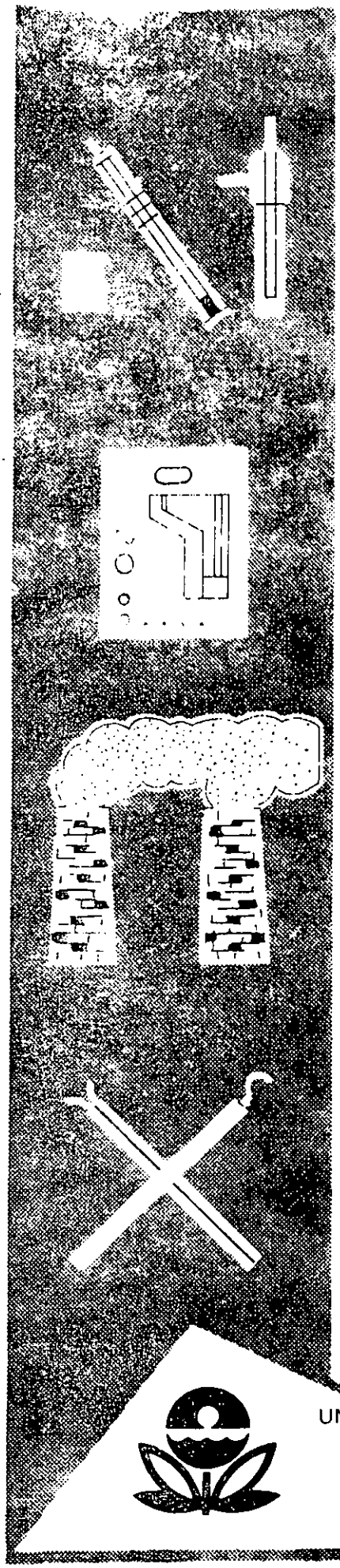

AIR POLLUTION EMISSION TEST

FINAL REPORT

CELOTEX CORPORATION
ASPHALT ROOFING PLANT
LOS ANGELES, CALIFORNIA

UNITED STATES ENVIRONMENTAL PROTECTION AGENCY
Office of Air and Waste Management
Office of Air Quality Planning and Standards
Emission Measurement Branch
Research Triangle Park, North Carolina

EMISSIONS TESTS REPORT
CELOTEX CORPORATION
ASPHALT ROOFING PLANT
LOS ANGELES, CALIFORNIA

Contract No. 68-02-1406

Task No. 21

EPA Report No. 75-ARM-8

Submitted to

U.S. Environmental Protection Agency
Office of Air Quality Planning and Standards
Emission Measurements Branch
Research Triangle Park, North Carolina 27711

Submitted by

Engineering-Science, Inc.
7903 Westpark Drive
McLean, Virginia 22101

August 1976

PREFACE

The work reported herein was conducted by personnel from Batelle-Columbus Laboratories (Battelle), Engineering-Science (ES), the Environmental Protection Agency (EPA), and Midwest Research Institute (MRI).

Analysis of all collected samples, with the exception of particle size samples and stack gas moisture and Orsat analyses, were performed by Battelle personnel at their Columbus, Ohio, laboratory. The Battelle analytical results were submitted as a separate report to the EPA.

MRI personnel were responsible for monitoring the process operations during the testing program and for writing Section III, Process Description and Operations, and Sections V and VI of Appendix B.

With the exception of the particle size sampling and the process sample collection, all field testing was performed by personnel from ES and the ES subcontractor, Commonwealth Laboratory, Inc. Calculations, data reduction, data analysis, and preparation of this report were performed by ES personnel.

The particle size samples and analyses were performed by EPA personnel, as was the collection of process samples. Mr. Clyde E. Riley, Office of Air Quality Planning and Standards, Emission Measurement Branch, served as the Test Project Officer and was responsible for coordinating the performance testing program.

Mr. Eric A. Noble, Office of Air Quality Planning and Standards, Industrial Studies Branch, served as Test Process Project Engineer and was responsible for coordinating the process operations.

TABLE OF CONTENTS

		Page
SECTION I	INTRODUCTION	1
SECTION II	SUMMARY AND DISCUSSION OF RESULTS	6
	- PARTICULATES	7
	- TOTAL HYDROCARBONS (THC)	17
	- POLYCYCLIC ORGANIC MATTER (POM)	39
	- OUTLET GAS COMPOSITION	42
	- SULFUR DIOXIDE (SO_2)	44
	- VISIBLE EMISSIONS	44
	- PARTICLE SIZING	52
	- PROCESS SAMPLES	52
SECTION III	PROCESS DESCRIPTION AND OPERATIONS	59
	- PROCESS DESCRIPTION	59
	- PROCESS OPERATION	65
SECTION IV	LOCATION OF SAMPLING SITES	70
	- PARTICULATE, GASEOUS HYDROCARBON, POM SAMPLES, AND PARTICLE SIZING	70
	- SULFUR DIOXIDE SAMPLES	74
	- VISIBLE EMISSIONS OBSERVATIONS	77
	- PROCESS SAMPLES	77
SECTION V	SAMPLING AND ANALYTICAL PROCEDURES	81
	- PARTICULATES	81
	- TOTAL HYDROCARBONS (THC)	85
	- POLYCYCLIC ORGANIC MATTER (POM)	94
	- OUTLET GAS COMPOSITION	98
	- SULPHUR DIOXIDE (SO_2)	100
	- VISIBLE EMISSIONS	100

TABLE OF CONTENTS

		Page
APPENDIX A		
Section I	Particulate Test Results with Example Calculations	A-1
Section II	POM Test Results	A-20
Section III	Special Hydrocarbon Run Test Results	A-24
APPENDIX B		
Section I	Particulate Field Data	B-1
Section II	POM Field Data	B-27
Section III	Total Hydrocarbon and SO_2 Field Data	B-33
Section IV	Process Parameters Field Data	B-56
Section V	Asphalt Usage Field Data	B-73
Section VI	Visible Emissions Field Data	B-80
Section VII	Visible Emissions Data Summary	B-184
APPENDIX C		
Section I	Unabridged Strip Charts for Total Hydrocarbons	C-1
Section II	Unabridged Strip Charts for SO_2	C-26
APPENDIX D		
Section I	Sample Identification Log	D-1
Section II	Laboratory Data on Test Samples and Process Samples	D-6
Section III	Miscellaneous Laboratory Development Data	D-31
APPENDIX E		
Section I	Calibration Data	E-1
Section II	Daily Test Log	E-8
Section III	Project Participants	E-10
Section IV	Observer's Certifications	E-11
APPENDIX F		
Section I	Sampling and Analytical Procedures, Particulate - Total Hydrocarbons	F-1
Section II	Sampling and Analytical Procedures, POM	F-43

LIST OF TABLES

TABLE		Page
II-1	Daily Composite Test Log, October 21, 1975	8
II-2	Daily Composite Test Log, October 22, 1975	9
II-3	Daily Composite Test Log	10
II-4	Daily Composite Test Log, October 24, 1975	11
II-5	Particulate Emission Tests Summary, Performance of HEAF Control Device	12
II-6	Particulate Emission Tests Summary, Celotex (LA) HEAF Inlet	14
II-7	Particulate Emission Tests Summary, Celotex (LA) HEAF Outlet	15
II-8	Summary of Mass Collected In Front Half of Stack Gas Sampling Train, Celotex, Los Angeles	16
II-9	Total Hydrocarbon Emission Tests Summary	19
II-10 thru II-15	Flame Ionization Detector (FID) Data Summary	21 thru 32
II-16	Flame Ionization Detector (FID) Data Summary	36
II-17	Polycyclic Organic Matter (POM) Emission Tests Summary	40
II-18	Analysis of Flask Sample	43
II-19	SO_2 Emission Test Summary	45
II-20	Process Sample Analyses	54
II-21	HEAF Filter Analyses	55
II-22	Computed Analysis of Collected Material	56
II-23	Trace Metals Analysis	57
III-1	Summary of Line Speeds, Shingle Production and Asphalt Usage Rates	66
III-2	Summary of HEAF Control System Operating Conditions	68
III-3	Raw Material and Product Specifications Collected and Observed During Sampling Periods	69

LIST OF FIGURES

FIGURE		Page
II-1	HEAF Stack Outlet	46
II-2	HEAF Inlet Duct (Fugitive)	47
II-3	Saturator Spray/Dip (Fugitive)	48
II-4	Saturator Strike-In and Coater (Fugitive)	49
III-1	Schematic of Emission Sources Controlled by HEAF Including Test Point (TP) at Celotex's Los Angeles Roofing Plant	60
III-2	Rotary Drum HEAF Unit	62
III-3	HEAF Filter Drum and Media	64
IV-1	HEAF Inlet Sampling Site	71
IV-2	Schematic of Sampling Location HEAF Unit Inlet	73
IV-3	HEAF Outlet Sampling Site	75
IV-4	Schematic of Sampling Location HEAF Unit Outlet	76
IV-5	Plan View: Positions for Observation of Emission from Stack	78
IV-6	Plan View: Positions for Observation of HEAF Unit	79
IV-7	Positions for Observation of Saturator Hoods	80
V-1	Particulate and Gaseous Hydrocarbon Sampling Train	82
V-2 thru V-8	Recorder Strip Chart Displaying Instrument Response	87 thru 93
V-9	POM Sampling Train	95
V-10	POM Adsorbent Column	96
V-11	Recorder Strip Chart Displaying SO_2 Sampling Measurements	101

SECTION I

INTRODUCTION

Under Section 111 of the Clean Air Act of 1970, as amended, the Environmental Protection Agency (EPA) is charged with the establishment of performance standards for new stationary sources which may contribute significantly to air pollution. With consideration of both technical and economic aspects, a performance standard is based upon emission reduction systems which have been demonstrated to satisfactorily control one or more specific pollutants from a given stationary source. In order to set realistic performance standards, accurate data on pollutant emissions are routinely gathered from the stationary source category under consideration. This report presents emission test data and results to be used in the development of standards of performance for new stationary sources (SPNSS) to regulate air pollutant emissions from the manufacturing of asphalt roofing products.

The EPA Office of Air Quality Planning and Standards (OAQPS) selected the Celotex Corporation asphalt roofing plant in Los Angeles, California, for emission testing designed to gather background data for establishment and support of SPNSS. Engineering-Science, Inc. (ES) was retained by OAQPS under Task Order No. 21, Contract No. 68-02-1406, for the purpose of conducting a specified emission test program at the above installation. The Celotex (LA) plant was just one of several facilities selected for the SPNSS testing program. Because of the extensive analytical requirements EPA issued a separate contract to Battelle Memorial Institute for analyses of all emission tests samples collected during the asphalt roofing SPNSS projects.

The Celotex (LA) plant was originally recommended to EPA as an example of a well-controlled plant by both Celotex and Johns-Manville (the original manufacturer of the high energy air filter (HEAF) control device used by this Celotex plant). The Celotex plant and three other roofing products manufacturing plants in the Los Angeles area were surveyed as candidates

for the SPNSS testing program. When surveyed, all four plants were using HEAF control devices and in addition one plant also had an incinerator. For various reasons, the other plants were deemed unsuitable for the SPNSS testing program: one because the hooding system provided inadequate emissions pickup; one because it did not cool the exhaust fumes; and one because inlet testing would have been extremely difficult and also because the control system was a new installation that was still being fine tuned.

During the testing program the Celotex (LA) plant was operating under a variance issued by the Los Angeles Air Pollution Control District (LAAPCD). In March and again in June, 1975, emission tests had been performed by the LAAPCD and on both occasions the plant was found to be in violation of emission requirements. After the variance was issued, both Celotex and Anderson 2000 (the current HEAF manufacturer) did considerable work on the control system. They corrected the following major items.

- Gas velocity through the filter media was found to be below design specifications. Optimum performance of a HEAF unit depends upon maintenance of a high air velocity through the filter media. The velocity was increased by reducing the filter area.
- The filter mat being used was found to be of a lower density and constructed of larger diameter fibers than desired for optimum collection. The mat was replaced with a thicker, denser mat made with smaller diameter fibers.
- Drain lines from the mist eliminator were found to have excessive back pressure which caused the mist eliminator to drain too slowly. As a result, the mist eliminator became saturated and oil droplets were being reentrained in the exhaust gases. The drain line piping was modified to allow proper drainage of the collected oil.

Concurrent with the improvement efforts, the plant had a series of emission tests performed by an independent contractor. The last of these tests was performed shortly before the SPNSS testing program reported herein, and that test indicated compliance with the LAAPCD standards even though the plant had not yet switched to the better filter media.

Based on the EPA surveys and these later developments, the decision was made to include the Celotex (LA) plant in the overall SPNSS testing program.

The Celotex (LA) facility produces saturated felt, shingles, and roll goods. All emission tests described within this report refer to sampling at points associated with the No. 1 manufacturing process line. Potential air contaminant emission sources include the asphalt saturator, the strike-in section, the looper and the asphalt coater. Exhaust fumes from these operations are vented to a common ductwork system, sprayed with cooling water, routed through a cyclonic expansion chamber, and then passed through a high energy air filter (HEAF) prior to atmospheric discharge. In addition, several asphalt storage tanks are also vented to this common exhaust/treatment system.

The plant operates continuously, 6 days per week. However, most of the sampling runs were discontinuous due to the nature of the process which involved process interruptions, slowdowns, and complete stoppages. All emission tests conducted at this facility were performed only during times of normal operation of the production line as described in Section III, "Process Description and Operations". The emission testing program conducted at this Celotex plant during the week of October 21 through October 24, 1975, consisted of the following:

1. Particulate: Three repetitions of simultaneous inlet and outlet test runs were performed at the No. 1 HEAF unit. The tests were conducted in accordance with EPA Method ~~20~~ 5 and provided velocity, moisture, and particulate data.

2. Total Gaseous Hydrocarbon by Flame Ionization Detection (FID): Three simultaneous sampling runs of the HEAF inlet and outlet gases were performed concurrently with the particulate runs. One additional sampling run was conducted on the HEAF inlet stream to determine the gaseous hydrocarbon concentration of the exhaust gases from the asphalt storage tanks. The FID samples were obtained through a tee installed in the particulate train between the filter and the first impinger.

3. Polycyclic Organic Matter (POM): One POM sampling run was performed consisting of simultaneous tests of the HEAF inlet and outlet gas streams. Samples were collected in an experimental sampling train developed by Battelle.

4. Outlet Gas Composition: Four integrated Orsat samples were collected of the HEAF outlet gases, one sample during each of the three particulate runs and one sample during the POM run. The Orsat sample analysis was performed as specified in EPA Method 3. Five evacuated flask samples were also collected from the tee in the particulate train used to extract the FID samples at the HEAF outlet. One of these five samples was analyzed for gaseous components by gas chromatography. The other four samples were not analyzed.

5. Visible Emissions: Six hours of simultaneous observation were conducted by two observers of the HEAF outlet stack discharge. Six hours of simultaneous observation were conducted by two observers of fugitive emissions around the HEAF inlet ductwork. Simultaneous observation of fugitive emissions around the asphalt saturator were conducted by two observers for three hours at the spray/dip portion and three hours at the strike-in/coater section. Observations were performed in accordance with EPA Method 9 guidelines.

6. SO_2: One sample run of instrumental monitoring analysis was performed on the HEAF outlet gas stream using a Dynascience[1] electrochemical SO_2 analyzer.

7. Particle Sizing: Experimental sampling runs on the HEAF inlet and outlet gaseous streams were conducted exclusively by EPA personnel using a Brink[1] Cascade Impactor modified for this particular type of sampling.

---

(1) Mention of a specific company or product does not constitute endorsement by the EPA.

8. Process Samples: Grab samples of unblown asphalt, saturant asphalt, coater asphalt, recovered oil from the control device, and used and unused HEAF filter media were collected by Midwest Research Institute (MRI) and EPA personnel.

SECTION II

SUMMARY AND DISCUSSION OF RESULTS

Emission testing was performed at the Celotex asphalt roofing plant in Los Angeles during the week of October 21-24, 1975. During the testing program, several specific pollutants were sampled simultaneously at the inlet and outlet of the HEAF equipment used for control of pollutant emissions from the No. 1 asphalt saturator. In all instances, sampling times were conducted during specific process conditions which were considered to be similar to those used during normal plant operation. Process parameters were carefully observed and the emission tests performed only when the process appeared to be operating normally.

The manufacture of asphalt roofing products generates organic pollutants which are emitted to the atmosphere. These compounds are divided into two categories based on their physical state: particulates, which are liquid oil droplets; and gaseous hydrocarbons, which are organics in the vapor state. The distribution of organic pollutants between the two categories or physical states is highly temperature dependent. Very early in the SPNSS study of the asphalt roofing products manufacturing industry, it was recognized that the EPA Method 5 sampling procedure would require several modifications to insure that the data collected was comparable. For example, the particulate collection filter temperature would have to be controlled within a narrow range to prevent collected oil droplets from being subsequently vaporized. Other method modifications were also developed and evaluated prior to this testing program. These methods development tests led to the establishment of EPA Method 20--Determination of Particulate and Gaseous Hydrocarbon Emissions from the Asphalt Roofing Industry. The particulate and gaseous hydrocarbon testing reported herein was performed in accordance with EPA Method 20. The latest draft of Method 20 is contained in Appendix F, Sampling and Analytical Procedures. Additional discussion of Method 20 and the other procedures used during this testing program is contained in Section V, Sampling and Analytical Procedures.

In an effort to gain more insight into the emissions resulting from asphalt roofing manufacture, tests were conducted to quantify SO_2 and POM emissions in addition to the particulate and gaseous hydrocarbon emission tests. Visual emissions observations were also performed. To put the testing program in better perspective, Tables II-1 through II-4 are daily chronological listings of the particular test activities performed each day. Time entries are noted only when alterations were made in sampling or process conditions. Notations under the column "Line Speed" (feet per minute) designate the occurrence and cause of process upsets. The remainder of the columns indicate the intermittent frequency of sampling for specific pollutants at designated locations.

The remainder of this section describes the test results obtained for the individual pollutants sampled. Additional information concerning the test program results is contained in Section V, Sampling and Analytical Procedures.

PARTICULATES

Results of the particulate emission tests at the HEAF inlet and outlet have been averaged for each location as shown in Table II-5. Inlet sampling was conducted upstream of the water spray used to cool the exhaust gases. As a result, the moisture content and uncorrected gas volumetric flow rates were consistently higher at the HEAF outlet. For the same reason, the HEAF outlet temperature was always lower than the corresponding inlet temperature for each run. When the gas volumetric flow rates were corrected to dry standard conditions (20°C, 760mm Hg., dry) the outlet volumetric flows were still consistently 6 to 9 percent higher than the inlet flow rates. The average inlet gas flow rate was 18,462 dry standard cubic feet per minute (DSCFM), while the average outlet value was 19,681 DSCFM. The HEAF fan suction pressure is approximately 29 inches H_2O below atmospheric. It is likely that the higher outlet volumetric flow rates resulted from ambient air leaking into the system at the HEAF fan suction. Process temperatures were also recorded directly before and after the HEAF filter mat. These data are presented in Table III-2, Summary of HEAF Control System Operating Conditions.

TABLE II-1

DAILY COMPOSITE TEST LOG

OCTOBER 21, 1975

Time	Line Speed	PARTICULATES HEAF Inlet	PARTICULATES HEAF Outlet	TOTAL HYDROCARBONS HEAF Inlet	TOTAL HYDROCARBONS HEAF Outlet	VISIBLE EMISSIONS HEAF Inlet (Fugitive)	
0830							B
0840						B	
0909							
0912							
0930							
0945							
0948							
1000							
1034							
1035	A						
1155							
1200							
1259	250	B	B	B			
1300					B		
1313							
1314							
1345	270						
1353							
1354	A						
1408							
1409							
1413	275						
1414							
1418							
1426	A						
1432							
1433	210						
1437	C						
1448							
1508							
1510	250						
1514							
1516							
1525	210						
1539							
1540:30							
1541	R						
1543	250						
1543:30							
1544							
1549							
1600	280						
1628		E	E	E	E		
1642							
1645	290						
1715	290						
1720	250						
1727						E	E
1745	A						
1754	250						
1802	270						

A = Felt Break, Line Stopped
B = Begin Test
C = Stop Sampling to Change Ports
E = End Test
R = Reduced Line Speed

TABLE II-2

DAILY COMPOSITE TEST LOG

OCTOBER 22, 1975

		PARTICULATES		TOTAL HYDROCARBONS		VISIBLE EMISSIONS		
Time	Line Speed	HEAF Inlet	HEAF Outlet	HEAF Inlet	HEAF Outlet	HEAF Outlet	Saturation Dip/Spray	Saturation Strike-in
0900	230						B	B
0903	A							
0930								
0938	260							
0944								
0953								
1000	225							
1003		B	B					
1004				B				
1005					B			
1006	A							
1025	250							
1032								
1033								
1040	250							
1110								
1111								
1112	A							
1115								
1125	245							
1144	C							
1146								
1150								
1212	A							
1223								
1224	210							
1226								
1235								
1240	230							
1255	210						E	
1303								
1304								
1305	G							
1308								
1318	220							
1325	200							
1325:30								
1336	200							B
1348								
1350	A							
1352								
1402								
1405		E		E				
1408								
1409								
1410	200							
1411								
1414			E		E			
1425	200							
1528								
1540	200							
1541								
1600						B	B	
1655	G							
1710	L						E	
1715	200							E
1721								
1756								

A = Felt Break, Line Stopped
B = Begin Test
C = Stop Sampling to Change Ports
E = End of Test
F = Flaw in Felt, Line Stopped
G = Changing Granules, Line Stopped
L = Line On

TABLE II-3

DAILY COMPOSITE TEST LOG

OCTOBER 23, 1975

Time	Line Speed	PPOM HEAF Inlet	PPOM HEAF Outlet
1350	175		
1351		B	B
1354	N		
1355	W		
1405	175		
1410			
1426	A		
1428			
1434	210		
1436			
1458	G		
1515	130		
1522			
1550			
1551	C		
1615	130		
1622			
1650	G		
1652			
1706	130		
1708			
1750		E	E

A = Felt Break, Line Stopped
B = Begin Test
C = Changing Ports, Sampling Stopped
E = End Test
G = Changing Granules, Line Stopped
N = Nozzle Change, Sampling Stopped
W = Waiting for Other Team, Sampling Stopped

TABLE II-4

DAILY COMPOSITE TEST LOG

OCTOBER 24, 1975

Time	Line Speed	PARTICULATES HEAF Inlet	PARTICULATES HEAF Outlet	TOTAL HYDROCARBONS HEAF Inlet	TOTAL HYDROCARBONS HEAF Outlet	VISIBLE EMISSIONS HEAF Outlet		SO_2 HEAF Outlet
0926						B		
0945	285							
0955		B	B	B	B			
1000	285						B	B
1012								
1015	270							
1049								
1050	G							
1051								
1052								
1107	275							
1108								
1113								
1115								
1120	295							
1121								
1123	C							
1133	A							
1134								
1155	130							
1159								
1205								
1214	A							
1228								
1230	285							
1235								
1254	L							
1305	240							
1306								
1307								
1315								
1317								
1320	230							
1334	A							
1342								
1345	270							
1402								
1405		E	E	E	E			E
1415	290							
1416	A							
1418								
1521				B				
1535	200							
1538								
1545	250							
1600	200							
1613	225							
1646	A			E				
1650								
1653	200							
1658								
1710	250					E		
1718								
1733								
1735								
1753	A						E	
1800								

A = Felt Break, Line Stopped
B = Begin Test
C = Changing ports, Sampling stopped
E = End Test
G = Changing granules, line stopped
L = Line stopped

TABLE II-5

PARTICULATE EMISSION TESTS SUMMARY

PERFORMANCE OF HEAF CONTROL DEVICE

AVERAGE OF TESTS

METRIC UNITS INLET[g]	METRIC UNITS OUTLET		SAMPLE LOCATION		ENGLISH UNITS INLET[g]	ENGLISH UNITS OUTLET
2.848	3.693	Nm^3[a]	- Volume of Gas Sampled	- DSCF[d]	100.557	130.406
2.00	2.51		Percent Moisture by Volume		2.00	2.51
60.8	52.2	°C	- Average Stack Temperature	- °F	142	126
522.76	557.27	Nm^3/min[b]	- Stack Volumetric Flow Rate	- DSCFM[e]	18,462	19,681
612.64	639.84	m^3/min[c]	- Stack Volumetric Flow Rate	- ACFM[f]	21,636	22,596
96.9	99.5		Percent Isokinetic		96.9	99.5
		M ton product per hr.	- Production Rate	- tons product per hr.		
			Particulates - probe, cyclone, and filter catch			
2728.2	55.5	mg		mg	2728.2	55.5
956	15.2	mg/Nm^3		gr/DSCF	0.418	0.00700
815	13.2	mg/m^3		gr/ACF	0.356	0.00567
30.0	0.506	kg/hr		lb/hr	66.0	1.11
		kg/Mton		lb/ton product		

Average Mass Collection Efficency = 98.3%

(a) Dry normal cubic meter at 20°C, 760mm Hg.

(b) Dry noraml cubic meters per minute at 20°C, 760mm Hg.

(c) Actual cubic meters per minute

(d) Dry standard cubic feet at 68°F, 29.92 in. Hg.

(e) Dry standard cubic feet per minute at 68°F, 29.92 in. Hg.

(f) Actual cubic feet per minute

(g) Averages do not include Inlet Run CEL-3P.

The average inlet and outlet particulate concentrations and mass flow rates are based on the material collected in the front half of the sampling train (probe, prefilter, and filter). Corrections have been made for blank weights of the reagents used for sample recovery. The average particulate concentrations were 0.418 grains per dry standard cubic foot (gr/DSCF) for the inlet runs, and 0.00700 gr/DSCF for the outlet runs. Average mass flow rates were 66.0 and 1.11 pounds per hour (lb/hr) for the inlet and outlet respectively. Based on these mass flow data, the HEAF system particulate collection efficiency was 98.3 percent.

Due to the nature of the shingle manufacturing operation, several factors in addition to line speed have a direct effect on the production weight rate without a corresponding effect on the emission potential. An example is the type and weight of granules applied to the shingles. Thus, production weight rates may not correlate directly with emission potentials. For this reason, no values have been included in the particulate summary tables for either production rates or emission factors. The headings have been included on the tables so that these data may be added at a later date if desired.

Tables II-6 and II-7 summarize the three particulate test results for the HEAF inlet and outlet respectively.

Examination of Table II-6 reveals that for inlet Run CEL-3P an extremely excessive amount of particulate was collected from the front half TCE wash. This occurrence was due to the fact that during the positioning of the probe for the vertical traverse, the probe was inserted too deep, thus striking the stack wall opposite the sample port. As a result particulate matter entered the probe nozzle and was subsequently recovered during the sample train clean-up. Because the probe tip inadvertently scraped the stack wall, the collected particulate was not considered to be representative of actual inlet conditions. Therefore, Run CEL-3P has been excluded from the average of test results presented in Table II-5.

The actual quantity of material collected in the front half to the EPA Method 20 sampling train for each particulate test is shown in Table II-8.

TABLE II-6

PARTICULATE EMISSION TESTS SUMMARY

CELOTEX (LA)

HEAF INLET

Run Number	CEL-1P	CEL-3P	CEL-7P
Date	10/21/75	10/22/75	10/24/75
Volume of Gas Sampled - DSCF[a]	100.571	99.878	100.543
Percent Moisture by Volume	2.60	2.48	1.40
Average Stack Temperature - °F	141	134	142
Stack Volumetric Flow Rate - DSCFM[b]	18,300	18,100	18,600
Stack Volumetric Flow Rate - ACFM[c]	21,600	21,100	21,700
Percent Isokinetic	97.7	98.3	96.1
Production Rate - ton/hr			
Particulates - probe, cyclone, and filter catch			
mg	2894.2	13,429	2562.2
gr/DSCF	0.443	2.071	0.392
gr/ACF	0.376	1.773	0.337
lb/hr	69.5	321	62.6
lb/ton product			

[a] Dry standard cubic feet at 68°F, 29.92 in. Hg.

[b] Dry standard cubic feet per minute at 68°F, 29.92 in. Hg.

[c] Actual cubic feet per minute

TABLE II-7

PARTICULATE EMISSION TESTS SUMMARY

CELOTEX (LA)

HEAF OUTLET

Run Number	CEL-2P	CEL-4P	CEL-8P
Date	10/21/75	10/22/75	10/24/75
Volume of Gas Sampled - DSCF[a]	126.276	131.724	133.219
Percent Moisture by Volume	3.13	2.82	1.58
Average Stack Temperature - °F	127	128	123
Stack Volumetric Flow Rate - DSCFM[b]	19,400	19,700	19,900
Stack Volumetric Flow Rate - ACFM[c]	22,500	22,800	22,500
Percent Isokinetic	97.6	100.5	100.4
Production Rate - ton/hr			
Particulates - probe, cyclone, and filter catch			
mg	95.5	21.8	49.3
gr/DSCF	0.012	0.003	0.006
gr/ACF	0.010	0.002	0.005
lb/hr	1.94	0.430	0.974
lb/ton product			

[a] Dry standard cubic feet at 68°F, 29.92 in. Hg.

[b] Dry standard cubic feet per minute at 68°F, 29.92 in. Hg.

[c] Actual cubic feet per minute

TABLE II-8

SUMMARY OF MASS COLLECTED IN FRONT HALF OF STACK GAS SAMPLING TRAIN, CELOTEX, LOS ANGELES, (ALL VALUES IN MILLIGRAMS)

	Oct. 21, 1975		Oct. 22, 1975		Oct. 24, 1975	
Run No.:	CEL 1P	CEL 2P	CEL 3P	CEL 4P	CEL 7P	CEL 8P
Location:	Inlet	Outlet	Inlet	Outlet	Inlet	Outlet
Data, Not Corrected for Blanks						
Filter Catch	565.0	44.0	307.6	10.6	278.3	34.5
TCE Wash--front half [a]	2,299.7 [g]	54.0	11,287.8	12.4	529.2	15.4
Acetone Wash--front half [b]	47.2	5.3	22.1	3.2	11.3	2.9
Prefilter	--	--	1,827.9	--	1,753.2	--
TOTAL	2,911.9	98.5	13,455.4	26.2	2,572.0	52.8
Data, Corrected for Blanks						
Filter Catch [c]	564.4	43.4	307.0	10.0	277.7	33.9
TCE Wash--front half	2,283.3 [d,g]	47.3 [d]	11,276.2 [d]	8.9 [d]	524.4 [e]	12.9 [e]
Acetone Wash--front half [f]	46.5	4.9	21.7	2.9	10.6	2.5
Prefilter	--	--	1,824.1	--	1,749.5	--
TOTAL	2,894.2	95.5	13,429.0	21.8	2,562.2	49.3

(a) Combined TCE front half wash residue
(b) Combined acetone front half wash residue
(c) Filter blank = 0.6 mg
(d) TCE blank = 25.2 μg/ml
(e) TCE blank = 24.6 μg/ml
(f) Acetone blank = 3 μg/ml
(g) Includes rinse of glass frit (Run 1P only)

This table includes both raw laboratory data and data corrected for reagent blank weights.

Each particulate emission test was conducted for a total period of 144 minutes. Sampling was terminated intermittently when the production line was not operating normally. For each test the calculated isokinetic sampling rate was well within the defined limits for acceptable test results (90-110 percent). Orsat analyses of the inlet and outlet gas streams showed them to contain essentially the same degree of components as air.

Computer print-outs of the test results are contained in Section I of Appendix A together with example calculations of particulate test results. All particulate field test data are contained in Section I of Appendix B. A description of EPA Method 20 is located in Section I of Appendix F.

TOTAL HYDROCARBONS

HEAF inlet and outlet streams were simultaneously sampled for total gaseous hydrocarbon content using flame ionization detection (FID) analyzers. The total hydrocarbon (THC) sampling systems were operated in conjunction with the particulate runs at the same two stack locations. In addition, THC testing was conducted for one sample run at the HEAF inlet with the vent lines from the asphalt storage tanks closed.

Each particulate sampling train incorporated a tee in the glass tubing which connected the particulate filter to the first impinger. Small portions of the gases sampled by the particulate trains were continuously drawn off through the tees and fed to the FID analyzers. These flow rates were 0.4 liters per minute (l/min) for the inlet FID analyzer and 2.4 to 2.8 l/min for the outlet FID unit. For each particulate test, the volume of gas diverted to the FID units was added to the volume measured by the dry gas meter to obtain the total volume sampled by the particulate train. Appropriate corrections were also applied to the volume of condensate collected by each particulate train. An example calculation and additional discussion is given in Section I of Appendix A.

Table II-9 summarizes the average measured hydrocarbon concentrations and calculated hydrocarbon emission rates for each of the three simultaneous HEAF inlet and outlet tests. The three inlet runs averaged 91, 120 and 131 parts per million by volume (ppmv), reported as methane. When converted to grains per dry standard cubic foot, the average inlet values for the three runs were 0.0272, 0.0359 and 0.0387 gr/DSCF, again based upon methane. The corresponding average mass emission rates for the inlet tests were 4.27, 5.57, and 6.17 pounds per hour (lb/hr) as methane.

The average measured outlet concentrations for the three tests were 133, 125, and 134 ppmv, as methane. The equivalent values for units of gr/DSCF were 0.0396, 0.0375, and 0.0413 gr/DSCF respectively, and the corresponding mass emission rates were 6.58, 6.33, and 7.04 lb/hr. In all three tests the average gaseous hydrocarbon concentrations at the outlet were higher than the corresponding inlet values. The largest difference occurred during the first test (runs CEL-1-THC and CEL-2-THC), where the average inlet concentration was 91 ppmv compared with 133 ppmv for the outlet. This was the lowest average inlet value recorded for the three tests, and it is not known whether there was some process related condition which caused the lower value or whether there might have been some problem such as a small leak in the FID sampling system. The average concentrations for the first half of the test were 106.7 ppmv for the inlet and 117.8 ppmv for the outlet. However, for the last half of the test the inlet value dropped to 73.8 ppmv while the outlet was 147.0 ppmv. It is possible that during the port change the FID sample line was disturbed sufficiently to cause a leak. Since the second and third tests (runs CEL-3-THC/CEL-4-THC, and CEL-7-THC/CEL-8-THC respectively) exhibited average inlet and outlet concentrations that differed by only 5 ppmv and 3 ppmv respectively, it seems quite likely that the CEL-1-THC run should be considered suspect.

There remains the question of why the outlet concentrations were higher than the inlet concentrations. The HEAF unit, of course, does not remove gaseous hydrocarbons. However, because the water spray cools the gas stream, some of the gaseous hydrocarbons should condense and be collected

TABLE II-9

TOTAL HYDROCARBON EMISSION TESTS SUMMARY

CELOTEX (LA)

HEAF CONTROL DEVICE

	Average Total Hydrocarbon Concentration			
	ppm_v, as CH_4		gr/DSCF	
Date	Inlet	Outlet	Inlet	Outlet
10/21/75	91	133	0.0272	0.0396
10/22/75	120	125	0.0359	0.0375
10/24/75	131	134	0.0387	0.0413

	Average Total Hydrocarbon Emission Rate, lb/hr	
Date	Inlet	Outlet
10/21/75	4.27	6.58
10/22/75	5.57	6.33
10/24/75	6.17	7.04

by the HEAF media. Thus it was expected that the gaseous hydrocarbon concentration would be lower at the outlet than at the inlet. Apparently, the reduced pressure on the fan suction side of the HEAF filter media causes some of the collected oil droplets to volatilize, resulting in a very slight (< 5 percent) increase in gaseous hydrocarbon content for the overall HEAF system.

Tables II-10 through II-15 present the measured gaseous hydrocarbon concentrations and calculated mass emission rates for each particulate test traverse point used in each run. Average concentrations and emission rates are also tabulated. Because several minor problems were encountered during the gaseous hydrocarbon sampling, there are a few particulate sampling points which have no corresponding gaseous hydrocarbon measurements. Therefore, the number of particulate sampling points for which gaseous hydrocarbon data was obtained is indicated (N = ___) at the end of each table.

These point by point tables readily indicate the rapid changes that occurred in gaseous hydrocarbon concentration with respect to time. The fluctuations were caused by normal transient process conditions such as transfering materials from storage tanks to heaters, etc.

The concentration values, in ppmv, reported in Tables II-10 through II-15 are on an as-measured ("wet") basis. At the point where the samples were extracted from the particulate train the gas temperatures were approximately 100°F. The gases flowed directly from each particulate train into a 50 milliliter, round-bottom, knock-out trap which was at ambient temperature, and then entered a heated Teflon[1] sampling line which was thermostatically controlled at approximately 150°F. The knock-out trap was included as a precautionary measure to collect impinger water that might have been drawn into the FID sampling line if the FID sampling pump had been accidently turned on while the particulate train was not operating. The trap was not intended to remove water vapor from the FID sample, because any attempt to do so by the usual methods of condensation or adsorption would probably have removed some of the gaseous hydrocarbons as well. The ambient temperatures were sufficiently

[1] Mention of a specific company or product does not constitute endorsement by the EPA.

TABLE II-10

FLAME IONIZATION DETECTOR (FID) DATA SUMMARY

CELOTEX (LA)

Sampling Location: HEAF Inlet

Date: Oct. 21, 1975 Run: CEL-1-THC

Data averaged during three minute intervals

TRAVERSE POINTS	TIME (min.) START	TIME (min.) END	GASEOUS HYDROCARBON CONCENTRATION MINIMUM ppm	MAXIMUM ppm	Point Average ppm	Point Average gr/DSCF x 10^{-3}	VOLUMETRIC FLOW SCFM	POLLUTANT MASS RATE lbs/hr
Port A								
24	12:59	13:02	125	125	125	37.3	389.3	.1243
23	13:02	13:05	125	128	127	37.9	430.8	.1392
22	13:05	13:08	128	132	130	38.8	466.4	.1549
21	13:08	13:11	132	138	135	40.3	480.9	.1659
20	13:11	13:14	135	142	139	41.5	501.4	.1775
19	13:14	13:17	135	141	138	41.2	504.7	.1780
18	13:17	13:20	129	136	133	39.7	509.6	.1725
17	13:20	13:23	124	130	127	37.9	498.1	.1616
16	13:23	13:26	88	124	112	33.4	496.5	.1421
15	13:26	13:29	80	133	92	27.5	492.7	.1158
14	13:29	13:32	85	94	90	26.9	486.4	.1119
13	13:32	13:35	80	129	91	27.2	465.6	.1082
12	13:35	13:38	129	151	140	41.8	322.8	.1155
11	13:38	13:41	113	154	143	42.7	303.1	.1108
10	13:41	13:44	94	115	103	30.7	280.3	.0738
9	13:44	13:47	88	94	91	27.2	275.5	.0640
8	13:47	14:50	88	91	90	26.9	263.8	.0607
7	13:50	13:53	91	94	92	27.5	252.4	.0593
6	14:13	14:16	71	77	74	22.1	257.4	.0487
5	14:16	14:19	71	74	72	21.5	279.4	.0516
4	14:19	14:22	69	73	71	21.2	268.8	.0488
3	14:22	14:25	75	79	77	23.0	252.4	.0497

Continued

TABLE II-10 (continued)

FLAME IONIZATION DETECTOR (FID) DATA SUMMARY

TRAVERSE POINTS	TIME (min.) START	TIME (min.) END	GASEOUS HYDROCARBON CONCENTRATION MINIMUM ppm	MAXIMUM ppm	Point Average ppm	Point Average gr/DSCF x 10^{-3}	VOLUMETRIC FLOW SCFM	POLLUTANT MASS RATE lbs/hr
2	14:25	14:26	79	82	81	24.2	248.9	.0515
	14:32	14:34	ND	ND	ND	ND	248.9	ND
1	14:34	14:37	86	91	88	26.3	203.5	.0459
Port B								
48	15:14	15:17	66	75	72	21.5	357.2	.0657
47	15:17	15:20	67	76	71	21.2	360.9	.0655
46	15:20	15:23	67	70	69	20.6	376.3	.0663
45	15:23	15:26	70	73	71	21.2	372.8	.0676
44	15:26	15:29	73	75	74	22.1	368.9	.0697
43	15:29	15:32	72	75	74	22.1	381.4	.0721
42	15:32	15:35	68	73	70	20.9	381.7	.0683
41	15:35	15:38	68	70	69	20.6	392.7	.0692
40	15:38	15:41	67	69	68	20.3	389.6	.0677
39	15:43	15:46	ND	ND	ND	ND	397.4	ND
38	15:46	15:49	ND	ND	ND	ND	389.3	ND
37	15:49	15:52	87	142	119	35.5	377.6	.1148
36	15:52	15:55	94	143	112	33.4	353.7	.1012
35	15:55	15:58	78	94	86	25.7	365.8	.0804
34	15:58	16:01	70	78	74	22.1	380.1	.0719
33	16:01	16:04	65	70	68	20.3	397.0	.0690
32	16:04	16:07	63	68	66	19.7	404.3	.0683
31	16:07	16:10	65	70	68	20.3	451.7	.0786
30	16:10	16:13	63	65	64	19.1	448.1	.0734
29	16:13	16:16	63	64	64	19.1	441.5	.0723
28	16:16	16:19	61	63	62	18.5	440.4	.0698
27	16:19	16:22	61	66	64	19.1	423.3	.0693
26	16:22	16:25	66	67	66	19.7	406.2	.0686
25	16:25	16:28	66	79	72	21.5	309.9	.0571
N = 46		Ave =	85.7	96.8	91.0	27.2		
						TOTAL =	18,300	4.266

ND = No Data
Standard Conditions: 68°F, 29.92 in. Hg

TABLE II-11

FLAME IONIZATION DETECTOR (FID) DATA SUMMARY

CELOTEX (LA)

Sampling Location: HEAF Outlet

Date: Oct. 21, 1975 Run: CEL-2-THC

Data averaged during three minute intervals

TRAVERSE POINTS	TIME (min.) START	TIME (min.) END	GASEOUS HYDROCARBON CONCENTRATION MINIMUM ppm	MAXIMUM ppm	Point Average ppm	Point Average gr/DSCF x 10^{-3}	VOLUMETRIC FLOW SCFM	POLLUTANT MASS RATE lbs/hr
Port A								
24	12:59	13:02	81	82	82	24.6	401.6	.0820
23	13:02	13:05	81	88	85	25.5	401.6	.0850
22	13:05	13:08	86	92	89	26.7	404.6	.0897
21	13:08	13:11	92	100	96	28.8	404.9	.0968
20	13:11	13:14	100	105	103	30.9	415.2	.1065
19	13:14	13:17	105	108	106	31.8	417.7	.1102
18	13:17	13:20	107	110	108	32.4	417.7	.1123
17	13:20	13:23	110	112	111	33.3	422.3	.1167
16	13:23	13:26	111	113	112	33.6	432.5	.1206
15	13:26	13:29	112	117	115	34.5	432.9	.1240
14	13:29	13:32	114	121	119	35.7	440.1	.1304
13	13:32	13:35	ND	ND	ND	ND	481.3	ND
12	13:35	13:38	ND	ND	ND	ND	481.3	ND
11	13:38	13:41	170	215	200	60.0	449.6	.2239
10	13:41	13:44	122	170	146	43.8	442.5	.1609
9	13:44	13:47	115	122	118	35.4	428.0	.1258
8	13:47	13:50	115	115	115	34.5	418.0	.1197
7	13:50	13:53	115	117	116	34.8	402.6	.1163
6	14:13	14:16	111	121	117	35.1	405.3	.1181
5	14:16	14:19	119	128	123	36.9	405.3	.1241
4	14:19	14:22	125	140	130	39.0	375.6	.1216
3	14:22	14:25	135	140	137	41.1	355.4	.1212

Continued

TABLE II-11 (continued)

FLAME IONIZATION DETECTOR (FID) DATA SUMMARY

TRAVERSE POINTS	TIME (min.) START	END	GASEOUS HYDROCARBON CONCENTRATION MINIMUM ppm	MAXIMUM ppm	Point Average ppm	gr/DSCF x 10^{-3}	VOLUMETRIC FLOW SCFM	POLLUTANT MASS RATE lbs/hr
2	14:25	14:26	128	140	134	40.2	343.4	.1146
2	14:32	14:34	112	125	117	35.1	343.4	.1146
1	14:34	14:37	125	133	130	39.0	343.4	.1112
Port B								
48	15:14	15:17	100	115	107	32.1	347.0	.0925
47	15:17	15:20	115	120	117	35.1	340.9	.0993
46	15:20	15:23	115	117	116	34.8	347.0	.1002
45	15:23	15:26	115	121	118	35.4	350.1	.1029
44	15:26	15:29	121	125	124	37.2	353.1	.1090
43	15:29	15:32	125	132	128	38.4	350.1	.1116
42	15:32	15:35	128	132	130	39.0	350.1	.1133
41	15:35	15:38	132	136	134	40.2	384.6	.1283
40	15:38	15:41	134	141	137	41.1	390.0	.1330
39	15:43	15:46	105	190	150	45.0	403.4	.1507
38	15:46	15:49	190	250	220	56.0	408.2	.2236
37	15:49	15:52	250	273	260	78.0	418.4	.2709
36	15:52	15:55	160	273	200	60.0	442.9	.2286
35	15:55	15:58	147	160	152	45.6	442.9	.1676
34	15:58	16:01	145	147	146	43.8	430.8	.1566
33	16:01	16:04	142	145	143	42.9	410.8	.1463
32	16:04	16:07	140	143	142	42.6	389.7	.1378
31	16:07	16:10	140	140	140	42.0	420.6	.1466
30	16:10	16:13	137	140	138	41.4	397.4	.1366
29	16:13	16:16	139	142	141	42.3	378.4	.1329
28	16:16	16:19	140	145	142	42.6	361.3	.1277
27	16:19	16:22	144	148	146	43.8	343.4	.1248
26	16:22	16:25	148	149	148	44.4	330.9	.1219
25	16:25	16:28	149	152	150	45.0	330.9	.1236
N = 47		Ave =	126.6	139.4	132.7	39.6		
					TOTAL =		19,400	6.584

ND = No Data
Standard Conditions: 68°F, 29.92 in. Hg

TABLE II-12

FLAME IONIZATION DETECTOR (FID) DATA SUMMARY

CELOTEX (LA)

Sampling Location: HEAF Inlet

Date: Oct. 22, 1975 Run: CEL-3-THC

Data averaged during three minute intervals

TRAVERSE POINTS	TIME (min.) START	TIME (min.) END	GASEOUS HYDROCARBON CONCENTRATION MINIMUM ppm	MAXIMUM ppm	Point Average ppm	Point Average gr/DSCF x 10^{-3}	VOLUMETRIC FLOW SCFM	POLLUTANT MASS RATE lbs/hr
Port A								
48	10:03	10:06	ND	ND	ND	ND	364.1	ND
47	10:32	10:35	138	171	161	48.0	372.4	.1530
46	10:35	10:38	165	180	172	51.3	387.6	.1701
45	10:38	10:41	167	190	183	54.5	391.4	.1828
44	10:41	10:44	122	167	145	43.2	391.0	.1447
43	10:44	10:47	103	122	112	33.4	398.8	.1140
42	10:47	10:50	96	104	100	29.8	401.5	.1025
41	10:50	10:53	96	104	100	29.8	394.1	.1006
40	10:53	10:56	97	108	103	30.7	390.4	.1026
39	10:56	10:59	105	108	107	31.4	390.4	.1066
38	10:59	11:02	105	111	108	32.2	393.8	.1085
37	11:02	11:05	100	111	105	31.3	397.2	.1064
36	11:05	11:08	108	111	110	32.8	401.5	.1127
35	11:08	11:11	108	113	111	33.1	374.1	.1060
34	11:11	11:12	113	119	117	34.9	389.7	.1164
34	11:15	11:17	96	103	99	29.5	389.7	.0985
33	11:17	11:20	98	104	101	30.1	422.1	.1088
32	11:20	11:23	101	107	105	31.3	425.2	.1139
31	11:23	11:26	105	96	101	30.1	435.7	.1123
30	11:26	11:29	94	104	99	29.5	450.1	.1137
29	11:29	11:32	94	97	96	28.6	436.8	.1070

Continued

TABLE II-12 (continued)

FLAME IONIZATION DETECTOR (FID) DATA SUMMARY

TRAVERSE POINTS	TIME (min.) START	TIME (min.) END	GASEOUS HYDROCARBON CONCENTRATION MINIMUM ppm	MAXIMUM ppm	Point Average ppm	Point Average gr/DSCF x 10^{-3}	VOLUMETRIC FLOW SCFM	POLLUTANT MASS RATE lbs/hr
28	11:32	11:35	93	97	95	28.3	420.4	.1019
27	11:35	11:38	93	120	100	29.8	360.3	.0920
26	11:38	11:41	123	160	149	44.4	297.3	.1130
25	11:41	11:44	160	178	169	50.4	271.4	.1170
Port B								
24	12:26	12:29	99	142	121	36.1	343.0	.1059
23	12:29	12:32	116	161	133	39.6	364.1	.1236
22	12:32	12:35	161	192	177	52.7	452.9	.2046
21	12:35	12:38	126	174	150	44.7	490.6	.1878
20	12:38	12:41	119	126	123	36.7	502.5	.1577
19	12:41	12:44	112	119	116	34.6	507.9	.1503
18	12:44	12:47	104	112	108	32.2	514.9	.1419
17	12:47	12:50	99	105	102	30.4	516.0	.1343
16	12:50	12:53	98	102	100	29.8	516.4	.1318
15	12:53	12:56	96	98	97	28.9	499.1	.1235
14	12:56	12:59	95	99	97	28.9	519.9	.1287
13	12:59	13:02	94	103	98	29.2	466.5	.1167
12	13:02	13:05	93	99	96	28.6	327.9	.0804
11	13:05	13:08	88	100	94	28.0	301.4	.0723
10	13:25	13:28	86	90	88	26.2	276.5	.0621
9	13:28	13:31	89	92	90	26.8	281.3	.0646
8	13:31	13:34	92	101	97	28.9	266.3	.0659
7	13:34	13:37	100	105	103	30.7	255.0	.0670
6	13:37	13:40	102	116	107	31.9	244.2	.0667
5	13:40	13:43	116	185	131	39.0	242.3	.0810
4	13:43	13:46	185	230	208	62.0	247.9	.1316
3	13:46	13:49	181	236	218	65.0	153.3	.0853
2	13:49	13:52	140	182	161	48.0	203.1	.0834
1	14:02	14:05	ND	ND	ND	ND	223.8	ND
N = 47		Ave =	112.1	128.8	120	35.9		
						TOTAL =	18,100	5.570

ND = No Data
Standard Conditions: 68°F, 29.92 in. Hg

TABLE II-13

FLAME IONIZATION DETECTOR (FID) DATA SUMMARY

CELOTEX (LA)

Sampling Location: HEAF Outlet

Date: Oct. 22, 1975 Run: CEL-4-THC

Data averaged during three minute intervals

TRAVERSE POINTS	TIME (min.) START	TIME (min.) END	GASEOUS HYDROCARBON CONCENTRATION MINIMUM ppm	MAXIMUM ppm	Point Average ppm	Point Average gr/DSCF x 10^{-3}	VOLUMETRIC FLOW SCFM	POLLUTANT MASS RATE lbs/hr
Port A								
24	10:03	10:06	ND	ND	ND	ND	381.2	ND
23	10:32	10:35	121	148	128	38.3	395.6	.1297
22	10:35	10:38	148	170	159	47.6	404.2	.1646
21	10:38	10:41	114	176	152	45.5	419.9	.1635
20	10:41	10:44	114	128	121	36.2	419.6	.1300
19	10:44	10:47	108	118	113	33.8	429.9	.1244
18	10:47	10:50	101	108	105	31.4	434.7	.1169
17	10:50	10:53	106	106	106	31.7	439.7	.1193
16	10:53	10:56	108	108	108	32.3	447.1	.1237
15	10:56	10:59	111	111	111	33.2	454.4	.1292
14	10:59	11:02	113	113	113	33.8	456.5	.1321
13	11:02	11:05	111	114	113	33.8	463.2	.1340
12	11:05	11:08	114	121	117	35.0	490.7	.1470
11	11:08	11:11	121	128	125	37.4	489.9	.1568
10	11:11	11:12	128	131	130	38.9	457.7	.1524
10	11:15	11:17	98	112	105	31.4	457.7	.1231
9	11:17	11:20	112	121	117	35.0	457.7	.1371
8	11:20	11:23	121	124	123	36.8	425.6	.1340
7	11:23	11:26	124	128	126	37.7	412.2	.1330
6	11:26	11:29	124	128	126	37.7	404.2	.1304
5	11:29	11:32	126	126	126	37.7	393.3	.1269
4	11:32	11:35	126	128	127	38.0	382.0	.1243
3	11:35	11:38	128	135	132	39.5	370.8	.1253
2	11:38	11:41	135	175	163	48.8	349.6	.1459

Continued

TABLE II-13 (continued)

FLAME IONIZATION DETECTOR (FID) DATA SUMMARY

TRAVERSE POINTS	TIME (min.) START	TIME (min.) END	GASEOUS HYDROCARBON CONCENTRATION MINIMUM ppm	MAXIMUM ppm	Point Average ppm	Point Average gr/DSCF x 10^{-3}	VOLUMETRIC FLOW SCFM	POLLUTANT MASS RATE lbs/hr
1	11:41	11:44	175	198	186	55.6	343.6	.1636
Port B								
48	12:26	12:29	77	104	91	27.2	346.7	.0808
47	12:29	12:32	98	124	106	31.7	346.7	.0941
46	12:32	12:35	124	165	145	43.4	346.7	.1288
45	12:35	12:38	121	165	138	41.3	368.1	.1301
44	12:38	12:41	113	121	117	35.0	376.9	.1129
43	12:41	12:44	114	114	114	34.1	379.8	.1109
42	12:44	12:47	114	116	115	34.4	388.4	.1148
41	12:47	12:50	116	118	117	35.0	385.5	.1155
40	12:50	12:53	118	118	118	35.3	388.4	.1174
39	12:53	1:56	119	121	120	35.9	400.1	.1230
38	12:56	12:59	119	121	120	35.9	456.8	.1404
37	12:59	13:02	121	124	122	36.5	464.4	.1451
36	13:02	13:05	118	121	119	35.6	471.0	.1435
35	13:05	13:08	118	128	123	36.8	487.1	.1534
34	13:25	13:28	67	91	84	25.1	455.2	.0979
33	13:28	13:31	91	98	94	28.1	422.9	.1066
32	13:31	13:34	98	104	101	30.2	427.8	.1106
31	13:34	13:37	104	108	106	31.7	422.9	.1148
30	13:37	13:40	108	118	111	33.2	398.4	.1132
29	13:40	13:43	118	185	136	40.7	387.5	.1350
28	13:43	13:46	185	225	205	61.3	354.5	.1861
27	13:46	13:49	175	235	204	61.0	328.7	.1717
26	13:49	13:52	151	175	163	48.8	348.2	.1454
25	14:11	14:14	101	128	114	34.1	341.8	.0998
N = 48		Ave =	118.2	133.0	125.3	37.5		
							TOTAL = 19,700	6.332

ND = No Data
Standard Conditions: 68°F, 29.92 in. Hg

TABLE II-14

FLAME IONIZATION DETECTOR (FID) DATA SUMMARY

CELOTEX (LA)

Sampling Location: HEAF Inlet

Date: Oct. 24, 1975 Run: CEL-7-THC

Data averaged during three minute intervals

TRAVERSE POINTS	TIME (min.) START	TIME (min.) END	GASEOUS HYDROCARBON CONCENTRATION MINIMUM ppm	MAXIMUM ppm	Point Average ppm	Point Average gr/DSCF x 10^{-3}	VOLUMETRIC FLOW SCFM	POLLUTANT MASS RATE lbs/hr
Port A								
24	9:55	9:58	27	52	42	12.4	364.5	.0387
23	9:58	10:01	52	63	59	17.4	347.9	.0519
22	10:01	10:04	63	110	81	23.9	474.1	.0970
21	10:04	10:07	110	176	143	42.2	499.7	.1804
20	10:07	10:10	150	174	162	47.8	503.1	.2058
19	10:10	10:13	144	150	147	43.3	506.9	.1881
18	10:13	10:16	123	150	133	39.2	508.9	.1709
17	10:16	10:19	116	123	120	35.4	530.1	.1606
16	10:19	10:22	114	117	116	34.2	522.9	.1532
15	10:22	10:25	115	116	116	34.2	518.1	.1518
14	10:25	10:28	114	116	115	33.9	501.4	.1430
13	10:28	10:31	105	116	110	32.4	456.1	.1267
12	10:31	10:34	109	111	110	32.4	323.1	.0898
11	10:34	10:37	109	113	112	33.0	323.1	.0914
10	10:37	10:40	109	112	111	32.7	282.4	.0791
9	10:40	10:43	112	118	115	33.9	276.2	.0802
8	10:43	10:46	118	182	150	44.2	266.0	.1007
7	10:46	10:49	178	191	183	53.9	248.4	.1148
6	10:49	10:52	ND	ND	ND	ND	250.0	ND
5	11:08	11:11	ND	ND	ND	ND	245.3	ND
4	11:11	11:14	70	75	72	21.2	255.9	.0411
3	11:14	11:17	70	80	75	22.1	212.9	.0403
2	11:17	11:23	78	84	81	23.9	205.5	.0420
1	11:20	11:23	84	86	85	25.1	173.3	.0372

Continued

TABLE II-14 (continued)

FLAME IONIZATION DETECTOR (FID) DATA SUMMARY

TRAVERSE POINTS	TIME (min.) START	TIME (min.) END	GASEOUS HYDROCARBON CONCENTRATION MINIMUM ppm	MAXIMUM ppm	Point Average ppm	Point Average gr/DSCF x 10^{-3}	VOLUMETRIC FLOW SCFM	POLLUTANT MASS RATE lbs/hr
Port B								
48	12:30	12:33	137	141	138	40.7	311.6	.1086
47	12:33	12:36	141	183	162	47.8	377.1	.1543
46	12:36	12:39	157	218	181	53.4	391.2	.1788
45	12:39	12:42	205	243	229	67.5	394.0	.2278
44	12:42	12:45	161	205	194	57.2	419.9	.2057
43	12:45	12:48	149	161	155	45.7	413.1	.1617
42	12:48	12:51	150	150	150	44.2	418.8	.1586
41	12:51	12:54	145	150	147	43.3	418.4	.1553
40	13:06	13:09	123	130	126	37.1	422.3	.1344
39	13:09	13:12	130	140	135	39.8	426.9	.1455
38	13:12	13:15	137	140	139	41.0	419.5	.1472
37	13:15	13:18	137	140	139	41.0	397.6	.1395
36	13:18	13:21	132	137	134	39.5	369.1	.1249
35	13:21	13:24	126	132	129	38.0	376.8	.1227
34	13:24	13:27	126	126	126	37.1	376.8	.1199
33	13:27	13:30	126	140	128	37.7	394.6	.1275
32	13:30	13:33	140	198	157	46.3	402.0	.1594
31	13:33	13:34	198	229	214	63.1	405.6	.2192
31	13:45	13:47	120	239	167	49.2	405.6	.1710
30	13:47	13:50	116	118	117	34.5	450.3	.1330
29	13:50	13:53	116	123	120	35.4	457.1	.1385
28	13:53	13:56	123	123	123	36.3	453.9	.1410
27	13:56	13:59	123	130	127	37.4	456.7	.1465
26	13:59	14:02	130	161	137	40.4	447.0	.1546
25	14:02	14:05	161	164	163	48.1	437.7	.1802
N = 47		Ave =	123.0	141.2	131.4	38.7		
					TOTAL =		18,600	6.170

ND = No Data
Standard Conditions: 68°F, 29.92 in. Hg

TABLE II-15

FLAME IONIZATION DETECTOR (FID) DATA SUMMARY

CELOTEX (LA)

Sampling Location: HEAF Outlet

Date: Oct. 24, 1975 Run: CEL-8-THC

Data averaged during three minute intervals

TRAVERSE POINTS	TIME (min.) START	TIME (min.) END	GASEOUS HYDROCARBON CONCENTRATION MINIMUM ppm	MAXIMUM ppm	Point Average ppm	Point Average gr/DSCF x 10^{-3}	VOLUMETRIC FLOW SCFM	POLLUTANT MASS RATE lbs/hr
Port A								
24	9:55	9:58	138	252	173	51.1	410.0	.1794
23	9:58	10:01	126	138	132	39.0	404.5	.1351
22	10:01	10:04	137	145	141	41.6	407.0	.1451
21	10:04	10:07	138	145	141	41.6	412.4	.1471
20	10:07	10:10	143	143	143	42.2	417.8	.1511
19	10:10	10:13	138	141	140	41.3	422.8	.1491
18	10:13	10:16	139	141	140	41.3	422.8	.1491
17	10:16	10:19	141	148	145	42.8	458.3	.0014
16	10:19	10:22	145	150	157	46.4	461.1	.1450
15	10:22	10:25	148	151	149	44.0	463.5	.1747
14	10:25	10:28	148	155	152	44.9	468.7	.1802
13	10:28	10:31	149	155	152	44.9	463.5	.1781
12	10:31	10:34	150	155	152	44.9	464.3	.1785
11	10:34	10:37	152	152	152	44.9	459.4	.1767
10	10:37	10:40	149	153	151	44.6	447.4	.1709
9	10:40	10:43	148	156	152	44.9	434.7	.1709
8	10:43	10:46	158	232	200	59.1	418.9	.2119
7	10:46	10:49	237	245	241	71.2	408.0	.2487
6	10:49	10:52	185	242	223	65.9	408.0	.2301
5	11:08	11:11	ND	ND	ND	ND	386.3	ND
4	11:11	11:14	ND	ND	ND	ND	374.7	ND
3	11:14	11:17	87	108	97	28.6	383.4	.0941
2	11:17	11:20	108	114	111	32.8	361.8	.1016

Continued

TABLE II-15 (continued)

FLAME IONIZATION DETECTOR (FID) DATA SUMMARY

TRAVERSE POINTS	TIME (min.) START	TIME (min.) END	GASEOUS HYDROCARBON CONCENTRATION MINIMUM ppm	MAXIMUM ppm	Point Average ppm	Point Average gr/DSCF x 10^{-3}	VOLUMETRIC FLOW SCFM	POLLUTANT MASS RATE lbs/hr
1	11:20	11:23	114	121	117	34.6	352.3	.1043
Port B								
48	12:30	12:33	77	93	85	25.1	383.5	.0824
47	12:33	12:36	91	128	114	33.7	370.9	.1069
46	12:36	12:39	111	168	126	37.2	367.1	.1170
45	12:39	12:42	165	192	183	54.0	376.3	.1742
44	12:42	12:45	131	192	141	41.6	405.5	.1446
43	12:43	12:48	121	131	126	37.2	408.4	.1302
42	12:48	12:51	121	121	121	35.7	416.7	.1275
41	12:51	12:54	121	121	121	35.7	421.8	.1291
40	13:06	13:09	101	111	106	31.3	428.6	.1149
39	13:09	13:12	111	121	116	34.3	425.5	.1249
38	13:12	13:15	121	121	121	35.7	428.6	.1312
37	13:15	13:18	121	121	121	35.7	441.8	.1352
36	13:18	13:21	121	128	124	36.6	454.2	.1425
35	13:21	13:24	121	124	123	36.3	441.0	.1372
34	13:24	13:27	124	131	127	37.5	253.5	.1417
33	13:27	13:30	131	144	140	41.3	419.8	.1487
32	13:30	13:33	144	195	165	48.7	419.8	.1752
31	13:33	13:34	195	205	200	59.1	403.1	.2039
31	13:45	13:47	101	104	103	30.4	433.2	.1129
30	13:47	13:50	104	111	107	31.6	425.2	.1151
29	13:50	13:53	114	114	114	33.7	414.3	.1199
28	13:53	13:56	114	123	119	35.1	403.4	.1214
27	13:56	13:59	123	131	128	37.8	383.0	.1240
26	13:59	14:02	131	141	136	40.2	358.6	.1234
25	14:02	14:05	141	145	143	42.2	364.9	.1320
N = 47		Ave =	132.6	148.0	134.1	41.3		
						TOTAL	19,900	7.04

ND = No Data
Standard Conditions: 68°F, 29.92 in. Hg

high so that no condensation of either oil or water was noted in the knock-out traps during any of the runs. The manufacturers of the two FID analyzers both stated that the 2 to 3 percent water vapor contained in the sampled gas would not interfere with the hydrocarbon detection.

To provide a more direct comparison of the inlet and outlet concentrations and for calculations of mass emission rates, it is customary to work on a "dry" basis rather than the wet as-measured basis. By using the moisture content determined during each corresponding particulate run, the wet ppmv values were converted to grains per dry standard cubic feet (gr/DSCF) using the following equation:

$$C_{gr/DSCF} = \left(\frac{C_{ppmv}}{F_{dg}}\right)\left(\frac{M}{V}\right)(7000)\ (10^{-6})$$

where $C_{gr/DSCF}$ = concentration of hydrocarbons (as CH_4) at dry standard conditions (68°F, 29.92 in. Hg), gr/DSCF

C_{ppmv} = measured concentration of hydrocarbons at stack conditions, cubic feet of hydrocarbons (as CH_4) per 1,000,000 cubic feet of stack gas.

F_{dg} = mole fraction of dry gas determined from corresponding particulate run, dimensionless

M = molecular weight of CH_4, 16 lb/lb-mole

V = molar volume of ideal gas at standard conditions, 385.5 SCF/lb-mole

7000 = conversion factor, gr/lb

10^{-6} = conversion factor for ppmv to volume fraction dimensionless

The mass emission rate for each traverse point was determined by multiplication of the point concentration times the dry gas flow rate measured

at that point. The "point" dry gas flow rate was the product of the calculated point velocity and the area of the stack represented by that traverse point. Because forty-eight traverse points were used, each point represented 1/48 of the total stack area. The exact equations used for the point by point mass emission rate calculations are shown below:

$$Q_i = 60\ (1 - B_{wo})\ Vs_i \left(\frac{A}{48}\right)\left(\frac{T_{std}}{T_s}\right)\left(\frac{P_s}{P_{std}}\right)$$

where:

Q_i = volumetric dry stack gas flow rate for area with centroid at point i, DSCFM

B_{wo} = volume fraction of water vapor in the stack, dimensionless

Vs_i = stack gas velocity at point i, feet per second (FPS) at stack conditions

A = cross-sectional area of the stack, ft^2

T_{std} = absolute temperature at standard conditons, 528°F

P_{std} = absolute pressure at standard conditions, 29.92 in. Hg.

T_s = absolute stack gas temperature of point i, ^oR

P_s = absolute stack gas pressure at point i, in. Hg

60 = conversion factor, sec/min

48 = number of tranverse points, dimensionless

and

$$E_i = \left(\frac{60}{7000}\right)(C_i)\ (Q_i)$$

where:

E_i = gaseous hydrocarbon mass flow rate from area with centroid at point i, lb/hr

C_i = gaseous hydrocarbon concentration measured at point i, gr/DSCF

60 = conversion factor, min/hr

7000 = conversion factor, gr/lb

Total stack gas volumetric flow rate was determined by summation of the Q_i's. Likewise, total gaseous hydrocarbon mass flow rate was calculated as the sum of the E_i's. In the cases where hydrocarbon point measurements were unavailable, summation of the existing E_i values would not equal the total mass flow rate. Under such circumstances the average gaseous hydrocarbon concentration, C_{ave}, was multiplied times the total stack gas volumetric flow to determine the total gaseous hydrocarbon mass flow.

Copies of the recorder strip chart data obtained during the actual times of sampling are included in Section V, Sampling and Analytical Procedures. Copies of the unabridged strip chart data are contained in Section I of Appendix C.

During the final day of testing, the hydrocarbon contribution of the asphalt storage tank vents to the total hydrocarbon HEAF inlet loading was determined. This was accomplished by measuring HEAF inlet hydrocarbon concentrations with the dampers on the tank vent lines first closed and then opened. During this special test (Run No. CEL-9-THC) a sample traverse was not conducted, but rather sampling from one point (Point 36) was employed. As with the other gaseous hydrocarbon runs, stack gas flow parameters were recorded manually at three minute intervals and the FID analyzer output was recorded continuously on a strip chart. Average gaseous hydrocarbon concentrations and mass flow rates were calculated for each three minute interval utilizing the same equations used for the other gaseous hydrocarbon tests. These results are presented in Table II-16. A copy of the strip chart data recorded during this test is presented in Figure V-8, Section V, Sampling and Analytical Procedures.

During the test, the two vent lines were first closed and data was collected for approximately 15 minutes. The dampers were then opened and another 15 minutes of data was obtained. The process line was operated at normal speed during the testing period. With the exception of a transient concentration surge when the dampers were reopened, the measured concentrations were relatively steady during the testing period. Measured concentrations with the dampers closed ranged from 111 to 119 ppmv. With the

TABLE II-16

FLAME IONIZATION DETECTOR (FID) DATA SUMMARY

CELOTEX (LA)

Sampling Location: HEAF Inlet

Date: Oct. 24, 1975 Run: CEL-9-THC

Data averaged during three minute intervals

EVALUATION OF STORAGE TANK EMISSIONS

TRAVERSE POINTS	TIME (min.) START	TIME (min.) END	GASEOUS HYDROCARBON CONCENTRATION MINIMUM ppm	MAXIMUM ppm	Point Average ppm	Point Average gr/DSCF x 10^{-3}	VOLUMETRIC FLOW SCFM	POLLUTANT MASS RATE lbs/hr
36	15:21	15:23	34	54	44	13.1	392.9	.0799
	15:23	15:26	54	77	66	19.6	396.2	.0665
	15:26	15:29	64	77	71	21.1	395.5	.0714
	15:29	15:32	77	94	86	25.5	395.2	.0865
	15:32	15:35	94	111	103	30.6	394.8	.1035
	15:35	15:38	104	106	105	31.2	394.1	.1053
	15:38	15:41	104	108	106	31.5	397.1	.1071
	15:41	15:44	108	114	111	33.0	397.1	.1121
	15:44	15:47	114	124	120	35.6	396.4	.1210
	15:47	15:50	124	129	126	37.4	395.7	.1268
	15:50	15:53	129	129	129	38.3	395.4	.1298
	15:53	15:56	129	134	132	39.2	390.8	.1313
	15:56	15:59	134	134	134	39.8	390.1	.1330
	15:59	16:02	118	134	126	37.4	389.8	.1250
	16:02	16:05	114	119	117	34.8	389.8	.1160
	16:05	16:08	114	119	117	34.8	389.8	.1160
	16:08	16:11	111	114	112	33.3	390.1	.1112
	16:11	16:14	111	114	112	33.3	390.1	.1112
	16:14	16:17	111	173	140	41.6	394.4	.1405
	16:17	16:20	134	141	138	41.0	394.4	.1385
	16:20	16:23	131	138	135	40.1	394.7	.1356
36	16:23	16:26	129	138	134	39.8	394.7	.1345

Continued

TABLE II-16 (continued)

FLAME IONIZATION DETECTOR (FID) DATA SUMMARY

EVALUATION OF STORAGE TANK EMISSIONS

TRAVERSE POINTS	TIME (min.) START	TIME (min.) END	GASEOUS HYDROCARBON CONCENTRATION MINIMUM ppm	MAXIMUM ppm	Point Average ppm	Point Average gr/DSCF x 10^{-3}	VOLUMETRIC FLOW SCFM	POLLUTANT MASS RATE lbs/hr
36	16:26	16:29	129	131	130	38.6	394.7	.1305
36	16:29	16:32	129	131	130	38.6	394.7	.1305
↓	16:32	16:35	131	186	156	46.3	395.0	.1568
	16:35	16:38	186	215	200	59.4	395.0	.2010
	16:38	16:41	215	225	220	65.3	395.0	.2211
	16:41	16:44	192	235	210	62.4	395.4	.2112
	16:44	16:47	148	192	166	49.3	395.4	.1670
36	16:47	16:50	108	148	125	37.1	395.4	.1257
N = 30		Ave =	119.3	134.9	126.7	36.9		

Standard Conditions: 68°F, 29.92 in. Hg

Note: Dampers closed at 16:00
Dampers reopened at 16:15
Circulation initiated at 16:29
Materials Transfer initiated at 16:33
Materials Transfer completed at 16:44

dampers open the range was 129 to 138 ppmv. Averaging the measured and calculated data yields the following comparisons.

Time	Position of Dampers	Average THC Concentration, ppmv	Average "Point" Stack Flow Rate, SCFM	Calculated Point THC Mass Flow Rate lb/hr
1602-1614	Closed	114.5	400.0	0.117
1617-1629	Open	134.2	394.6	0.135

Thus the concentrations measured at Point 36 indicate that the storage tanks added about 20 ppmv to the baseline 114 ppmv observed during this test. This is a 17 percent increase in the measured concentration. The concentration increase was accompanied by a slight decrease in stack gas flow rate, however, so the calculated mass flow rate of gaseous hydrocarbons showed only a 15 percent increase from the baseline 0.117 lb/hr with the dampers closed to 0.135 lb/hr with the dampers open. Therefore, if the mass flow results obtained at Point 36 are representative of the entire inlet stream, then during Run No. CEL-9-THC the storage tank vent lines increase the total gaseous hydrocarbon loading to the HEAF unit by 15 percent. This should not be considered as a blanket statement applying under all conditions, but rather as an indicator of the relative contribution of gaseous hydrocarbons from the storage tanks. Time constraints and testing priorities did not allow for a rigorous evaluation of the vent tank emission rate. Actual sampling in the two vent lines had been considered, but was abandoned because it was felt that the value of the data would not justify the physical difficulties of reaching the vent lines and the resultant costs.

During Runs CEL-1-THC through CEL-6-THC hydrocarbon concentrations were observed to gradually increase and then gradually decrease over periods of 5 to 10 minutes. With the exception of these peaks, hydrocarbon concentrations were relatively stable. It was noted that the peaks seemed to correlate with the batch transfer of process materials. For further verification, the last part of Run No. CEL-9-THC included a materials transfer operation. The transfer required 11 minutes during which time the gaseous hydrocarbon concentration increased from 130 to 235 ppmv. The average concentration during the peak was approximately 196 ppmv. Prior to the

transfer operation, the hydrocarbon mass flow rate was 0.130 lb/hr. During the transfer the gaseous hydrocarbon flow rate averaged 0.198 lb/hr. The difference, 0.068 lb/hr, amounts to a 52 percent increase over the 0.130 lb/hr stady state mass flow rate for Point 36. Again, this value should not be considered as absolute, applying at all times. It does, however, confirm that there is a considerable increase in gaseous hydrocarbon concentration associated with the materials transfer operation.

POLYCYCLIC ORGANIC MATTER (POM)

Isokinetic sampling was conducted simultaneously at the HEAF inlet and outlet streams to determine POM concentrations and mass flow rates. The sampling was performed using Battelle POM trains which are essentially standard EPA Method 5 equipment modified by adding a packed adsorbent column between the heated filter and the first water-filled impinger. Identical forty-eight point sampling tanverses, as used during the particulate tests, were employed for each of the two POM tests. Upon completion of the test runs, the recovered samples were forwarded to the Battelle facilities in Columbus, Ohio, for analysis by gas chromatography - mass spectrometry (GC-MS). The sampling equipment and analytical procedures are discussed in greater detail in Section V, Sampling and Analytical Procedures.

Results of the two POM tests are shown in Table II-17. A total of thirteen organic compound groups were detected in the inlet sample while only nine groups were present in sufficient quantity to be detected in the outlet sample. The concentrations (gr/DSCF x 10^{-6}) and corresponding mass flow rates (lb/hr x 10^{-3}) have been reported individually for each detected compound group. To obtain the total POM mass flow rate, the calculated flow rates of each individual group were added together. This yielded a value of 0.0883 lb/hr for the inlet stream and 0.0079 lb/hr for the outlet stream. Thus, during the test the HEAF unit removed 0.0804 lb/hr of POM from the exhaust gas stream. This represents a 91 percent removal efficiency.

Upon completion of the POM sampling runs, the silica gel in the outlet sampling train was observed to be saturated. Therefore, the calculated moisture content for that run is probably lower than the actual stack gas

TABLE II-17

POLYCYCLIC ORGANIC MATTER (POM) EMISSION TESTS SUMMARY

CELOTEX (LA)

HEAF CONTROL DEVICE

Run Number	Inlet CEL-5P	Outlet CEL-6P
Date	10/23/75	10/23/75
Volume of Gas Sampled - DSCF[a]	59.167	125.605
Percent Moisture by Volume	1.26	0.90*
Average Stack Temperature - °F	129	125
Stack Volumetric Flow Rate - DSCFM[b]	19,200	20,500
Stack Volumetric Flow Rate - ACFM[c]	21,900	23,100
Percent Isokinetic	95.8	92.1

Polycyclic Organic Matter

Component	Concentration gr/DSCF x 10^{-6}		Emission Rate lb/hr x 10^{-3}	
	Inlet	Outlet	Inlet	Outlet
Anthracene/Phenanthrene	111	15.2	18.3	2.67
Methyl Anthracenes	292	21.0	48.1	3.69
Fluoranthene	6.00	0.307	0.987	0.0539
Pyrene	21.3	0.786	3.51	0.138
Methyl Pyrene/Fluoranthene	54.6	6.95	8.98	1.22
Benzo(c)phenanthrene	5.22	not detected	0.859	not detected
Cyrysene/Benz(a)anthracene	11.1	0.203	1.82	0.0357
Methyl Cyrysenes	31.6	0.227	5.20	0.0399
Benzo Fluoranthenes	0.274	0.0921	0.0451	0.0162
Benz(a)pyrene	0.0183	(0.123)[d]	0.00301	(0.0216)[d]
Benz(e)pyrene	0.0313		0.00515	
Perylene	1.19	not detected	0.196	not detected
3-Methylcholanthrene	1.57	not detected	0.258	not detected
TOTAL	536	44.9	88.3	7.89

% POM Reduction = 91.1

[a]Dry standard cubic feet at 68°F, 29.92 in. Hg.

[b]Dry standard cubic feet per minute at 68°F, 29.92 in. Hg.

[c]Actual cubic feet per minute

[d]Benzo (a)pyrene and Benzo(e) pyrene combined and reported as one value

*Silica gel observed to be saturated during clean-up at end of run.

moisture level. The outlet moisture content for the three pairs of particulate runs ranged from 13 to 20 percent higher than the corresponding inlet content. Assuming the same relationship held for the POM runs, then the actual stack gas moisture content for the outlet POM run was probably between 1.4 and 1.5 percent. Fortunately, this error does not significantly effect the measured values. When water vapor is not collected in the sample box it passes through the gas meter and is recorded as "dry" gas. This results in an inflated "dry" gas volume. The pollutant concentration is obtained by dividing the mass of pollutant collected by the volume of dry gas sampled. Thus an error in the dry gas volume measurement results in an equal but opposite error in the calculated concentration. In this case, assuming the actual moisture content was 1.5 percent, then the dry gas contained an estimated 0.6 percent moisture (1.5 - 0.9 = 0.6). The measured "dry" gas volume then is about 0.6 percent too large and the calculated pollutant concentration is about 0.6 percent smaller than the actual concentration.

The moisture content also affects the calculated stack gas flow rate both at stack conditions and at dry, standard conditions. For this run, again assuming that the actual moisture content was 1.5 percent, the calculated dry stack gas flow rate at standard conditions is approximately 0.5 percent higher than the actual dry flow rate. When the calculated pollutant concentration (0.6 percent too low) is multiplied by the calculated dry stack gas flow rate (0.5 percent too high) the resultant pollutant mass flow rate is within 0.1 percent of the true value. Therefore, the net effect of the moisture determination error is insignificant.

The sampling methodology as well as the cleanup procedures used for this work are considered to be the existing state-of-the-art. As more data are obtained and industrial program studies are fielded, perhaps the validation, accuracy, and reliability of this data can be determined. The adsorbent column, the crucial component of the Battelle POM sampling train, has been validated for a limited number of sampling conditions and laboratory sample analyses[1].

---

(1) Information submitted by Battelle Laboratory analysts who are knowledgeable in POM sampling and analyses.

The GC-MS analysis technique is fairly well proven and is discussed in Section V, Sampling and Analytical Procedures. Battelle analysts claim an accuracy of within $\pm$ 12 percent of the true value for sample recovery and analysis procedures relating to laboratory samples.

Copies of the POM field data sheets are contained in Section II of Appendix B. POM analytical results are contained in Section II of Appendix D. Additional general information pertaining to POM sampling and analysis is contained in Section II of Appendix F.

OUTLET GAS COMPOSITION

Integrated bag samples were collected of the HEAF outlet gases during each particulate run. The samples were subsequently analyzed with an Orsat analyzer within 30 minutes after collection. In all cases, CO and CO_2 were not detected. Measured O_2 content was 20.9 percent by volume. The N_2 content was obtained by difference. These analyses of the outlet gases showed them to contain essentially the same degree of components as air.

During the particulate run CEL-8-P, conducted on October 24, five specially evacuated gas sampling flasks were filled with gases from the HEAF outlet stream. The samples were withdrawn from the particulate sampling train through a tee installed at the entrance of the heated sample line feeding the FID analyzer. The flask stopcocks were only partially opened so that the flask filled slowly and did not disturb sample gas flow to the FID unit. It took approximately 3 minutes to fill a flask.

The flasks had been evacuated by Battelle using special high vacuum pumps. After sample collection, the flasks were returned to Battelle for analyses by gas chromatography (GC). Of the five samples submitted, one was selected for analysis and the results are presented in Table II-18. The oxygen and CO_2 analysis confirmed the Orsat results that had been obtained on site. As expected, a number of hydrocarbon species were detected. Of the 27 gases reported, 17 were hydrocarbons. The most abundant hydrocarbon was methane at 17 ppmv, followed by ethane, propane, and an unsaturated compound, C_4H_8, each at 2 ppmv. No attempt was made to correlate these results with the FID analyzer results.

TABLE II-18

ANALYSIS OF FLASK SAMPLE

CELOTEX (LA)

Sampling Location: HEAF Outlet

Date: October 24, 1975 Sample No: S75-007-091

COMPONENT	VOLUME PERCENT
O_2	20.9
CO_2	0.05
N_2	78.0
A	1.00
CO	<0.0015
H_2	0.04

COMPONENT	ppmv
SO_2	<0.02
H_2S	0.6
NO_x	<0.5
COS	0.06
CH_3OH	0.09
C_2H_5OH	<0.1
HCHO	<0.5
CH_3COCH_3	1.0
CH_4	17
C_2H_6	2
C_3H_8	2
C_4H_{10}	0.4
C_5H_{12}	0.5
C_6H_{14}	0.7
C_2H_4	0.4
C_3H_6	<0.1
C_4H_8	2
C_5H_{10}	<0.1
C_2H_2	<0.1
C_6H_6	0.06
$C_6H_5CH_3$	0.06

SULFUR DIOXIDE (SO_2)

Concurrent with the final day of particulate and hydrocarbon sampling, SO_2 emission testing was conducted on the HEAF outlet stream. Concentrations of SO_2 were determined by a continuous automatic monitoring instrument. Minimum, maximum and average SO_2 concentrations (ppmv) were determined for 10 minute test intervals. In addition, the average minimum, average maximum and the overall average SO_2 concentrations were calculated. These data are presented in Table II-19. SO_2 concentrations averaged 5.4 ppmv with a low of 2.6 ppmv and a high of 12.6 ppmv during the test. The average emission rate of SO_2 from the HEAF outlet was 1.07 lb/hr.

VISIBLE EMISSIONS

The visible emission observation summary data are presented graphically in Figures II-1 through II-4. For each observer the six-minute average opacity has been plotted vs. the time of the observation period. Since readings were intermittent in order to coincide with normal production operation, actual clock time is indicated on the graphs as well. It should be noted that the range on each graph opacity scale is 0 to 5 percent.

The summary sheets present opacities as consecutive set numbers of six-minute averages over the length of the observation period. Examination of these summaries reveals that some set number averages are for less than six minutes and also that successive set numbers are sometimes separated by an interval of several minutes. This is explained by the fact that visible emissions readings were recorded only while the production process was in its normal operation. Thus, when a process interruption occurred, the particular six-minute interval of observation would be curtailed, and the next set number would begin at the time that normal operation was attained.

The remainder of this sub-section describes the visible emission results for each source individually. Copies of the field test data sheets are contained in Section VI and VII of Appendix B.

TABLE II-19

SO_2 EMISSION TEST SUMMARY

CELOTEX (LA)

HEAF OUTLET

DATE: October 24, 1975

Data averaged during 10 minute intervals

Interval Starting/Ending Time (Duration Min)	SO_2 Concentration Minimum ppmv	Maximum ppmv	(N) Average ppmv
1012/1022 (10)	3.7	4.6	4.3
1022/1032 (10)	4.5	5.8	5.2
1032/1042 (10)	5.0	5.4	5.3
1042/1052 (9)[a]	5.4	12.6	11.8
1114/1124 (10)	2.6	6.7	4.2
1234/1244 (10)	3.0	9.0	5.9
1244/1254 (10)	4.2	4.6	4.3
1306/1316 (10)	3.3	4.3	4.0
1316/1326 (10)	3.9	5.1	4.7
1326/1334 (8)[b]	4.7	10.0	7.2
1345/1355 (10)	3.3	4.8	3.8
1355/1405 (10)	4.2	6.0	4.9
Average	4.0	6.5	5.4

Average SO_2 Concentration

at HEAF Outlet = 14.4 mg/Nm^3 = 8.97 x 10^{-7} lb/DSCF = 6.28 x 10^{-3} gr/DSCF

Average SO_2 Emission Rate of HEAF = 0.488 kg/hr = 1.07 lb/hr

[a]One minute of test lost - recorder off scale

[b]Two minutes of test lost - felt break

FIGURE II-1

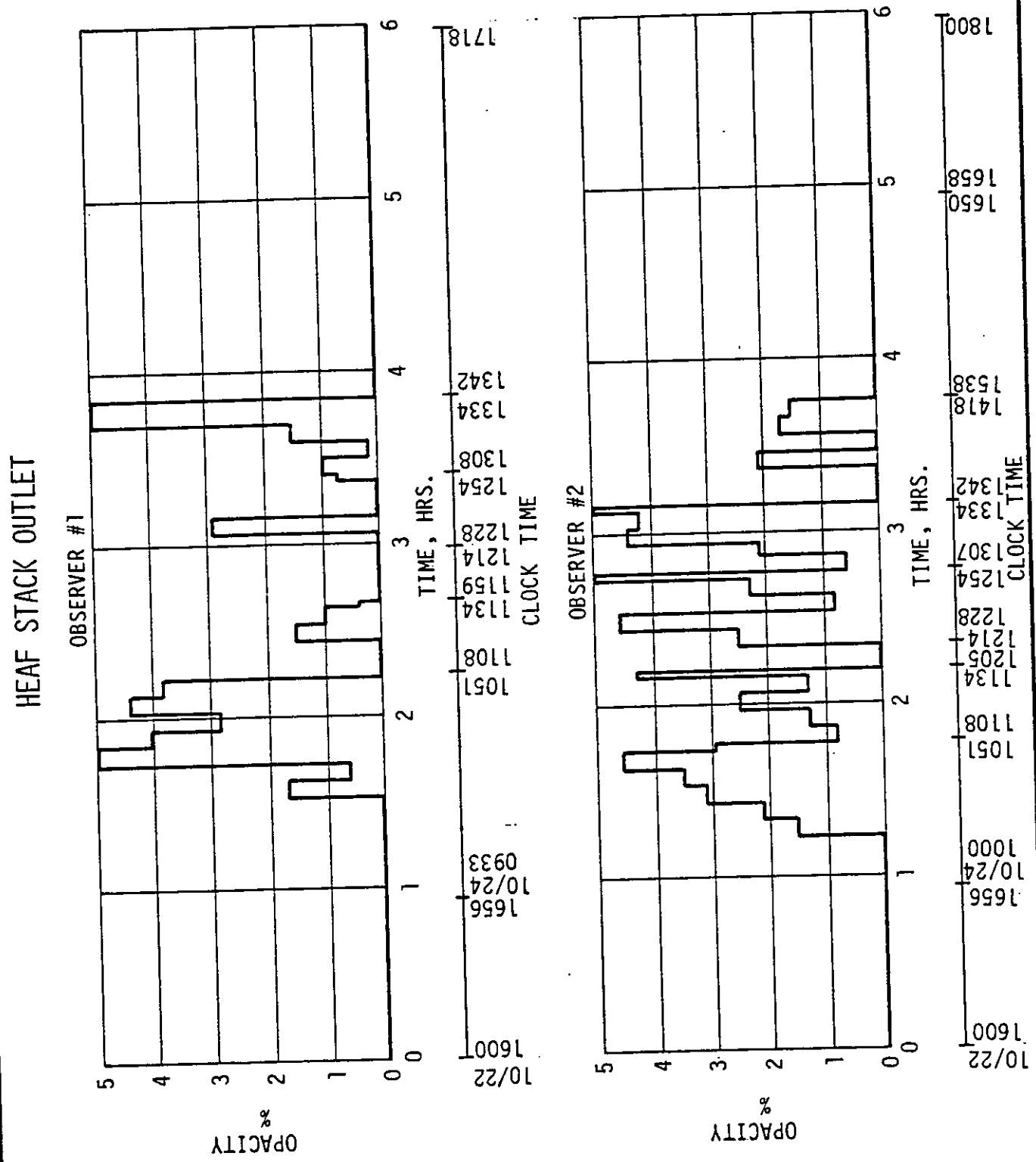
HEAF STACK OUTLET
OBSERVER #1
OPACITY %
0
1
2
3
4
5
6
TIME, HRS.
CLOCK TIME
10/22 1600
10/24 1656
0933
1051
1108
1134
1159
1214
1228
1254
1308
1334
1342
1718
OBSERVER #2
OPACITY %
0
1
2
3
4
5
6
TIME, HRS.
CLOCK TIME
10/22 1600
10/24 1656
1000
1051
1108
1134
1205
1214
1228
1254
1307
1334
1342
1418
1538
1650
1658
1800

FIGURE II-2

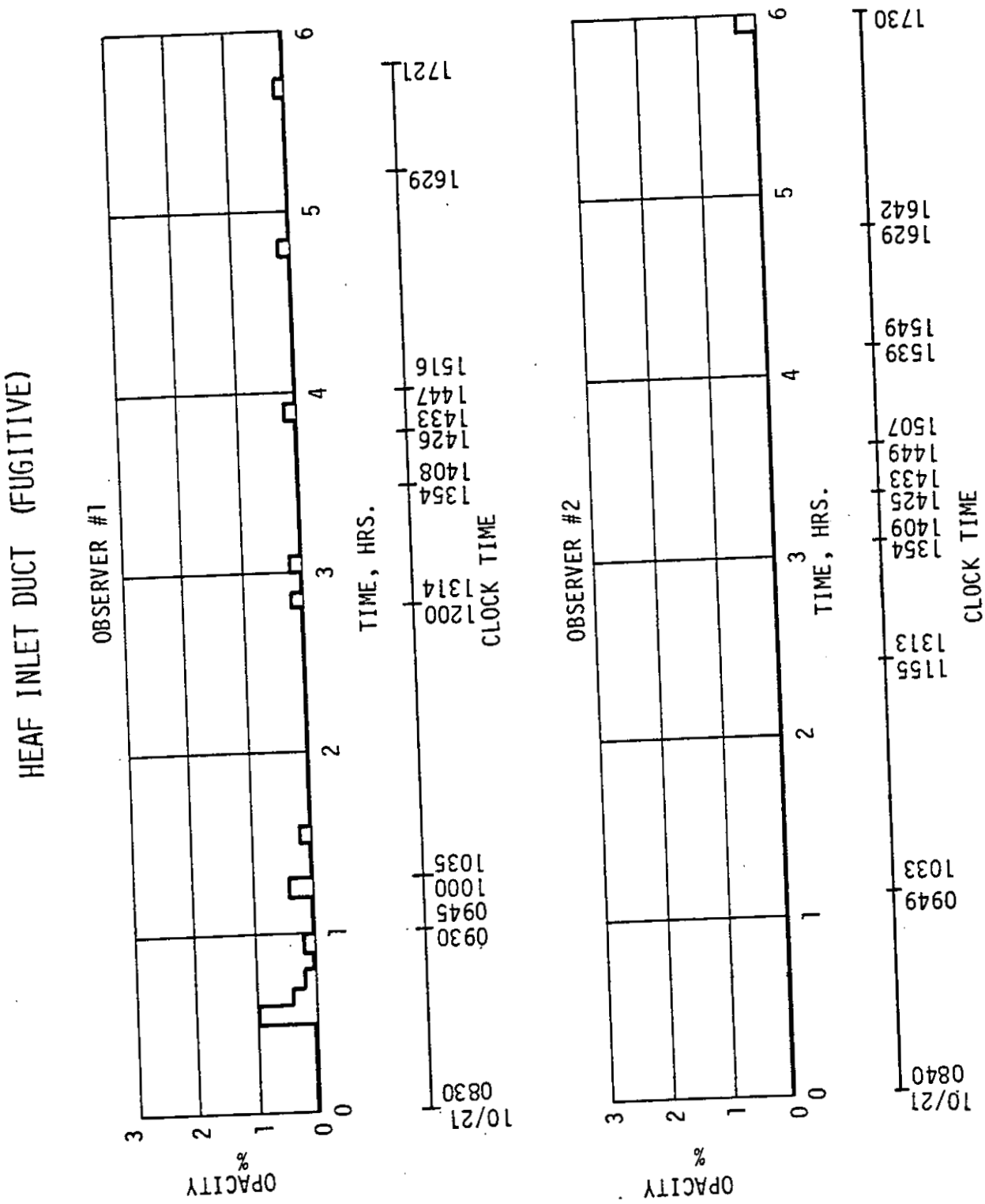
HEAF INLET DUCT (FUGITIVE)
OBSERVER #1
OPACITY %
0
1
2
3
TIME, HRS.
0
1
2
3
4
5
6
CLOCK TIME
10/21
0830
0930
0945
1000
1035
1200
1314
1354
1408
1426
1433
1447
1516
1629
1721
OBSERVER #2
OPACITY %
0
1
2
3
TIME, HRS.
0
1
2
3
4
5
6
CLOCK TIME
10/21
0840
0949
1033
1155
1313
1354
1409
1425
1433
1449
1507
1539
1549
1629
1642
1730

SATURATOR SPRAY/DIP (FUGITIVE)

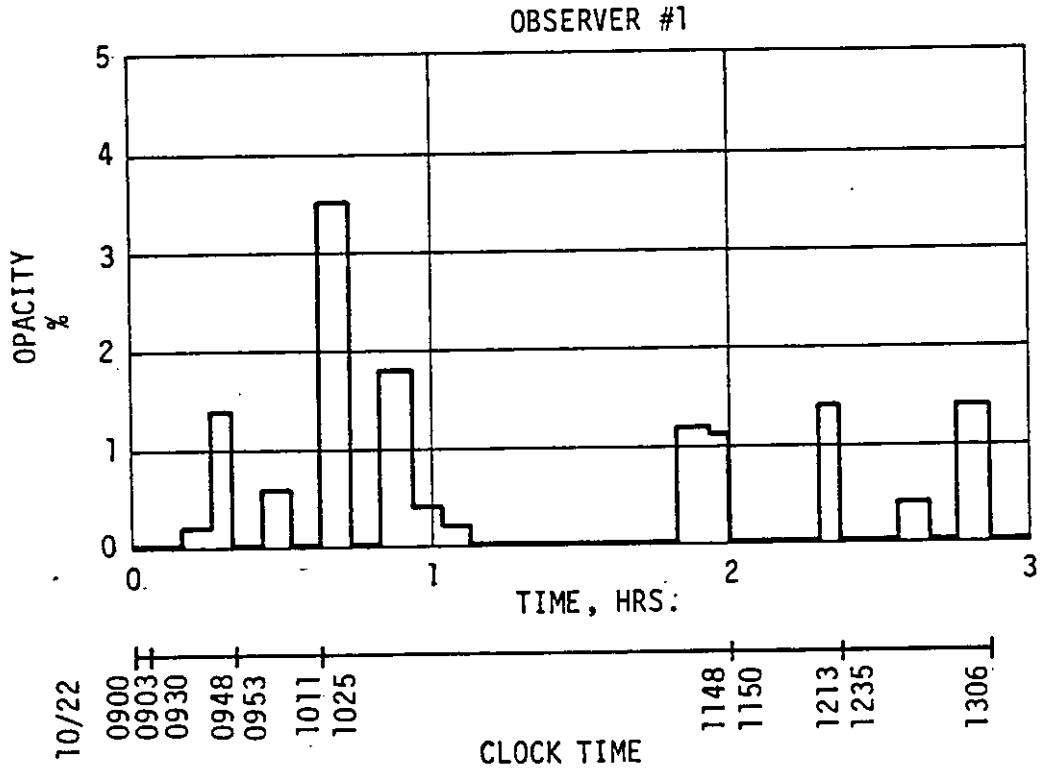

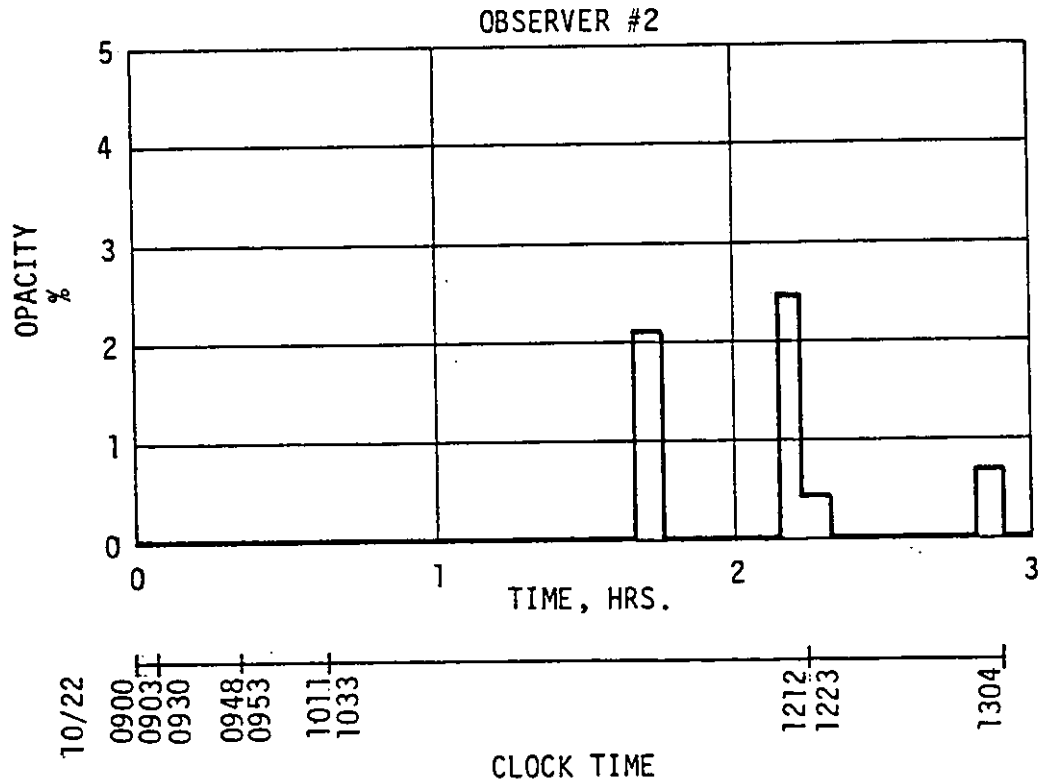

FIGURE II-4

SATURATOR STRIKE-IN AND COATER (FUGITIVE)

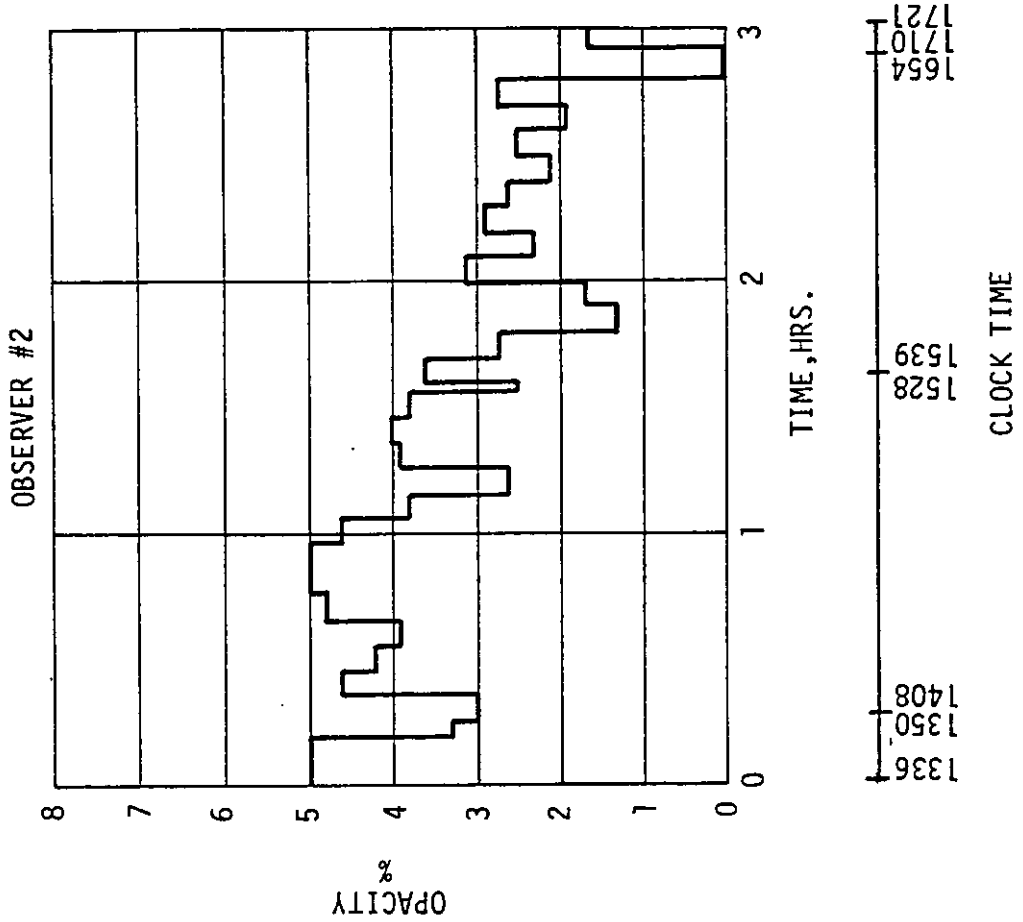

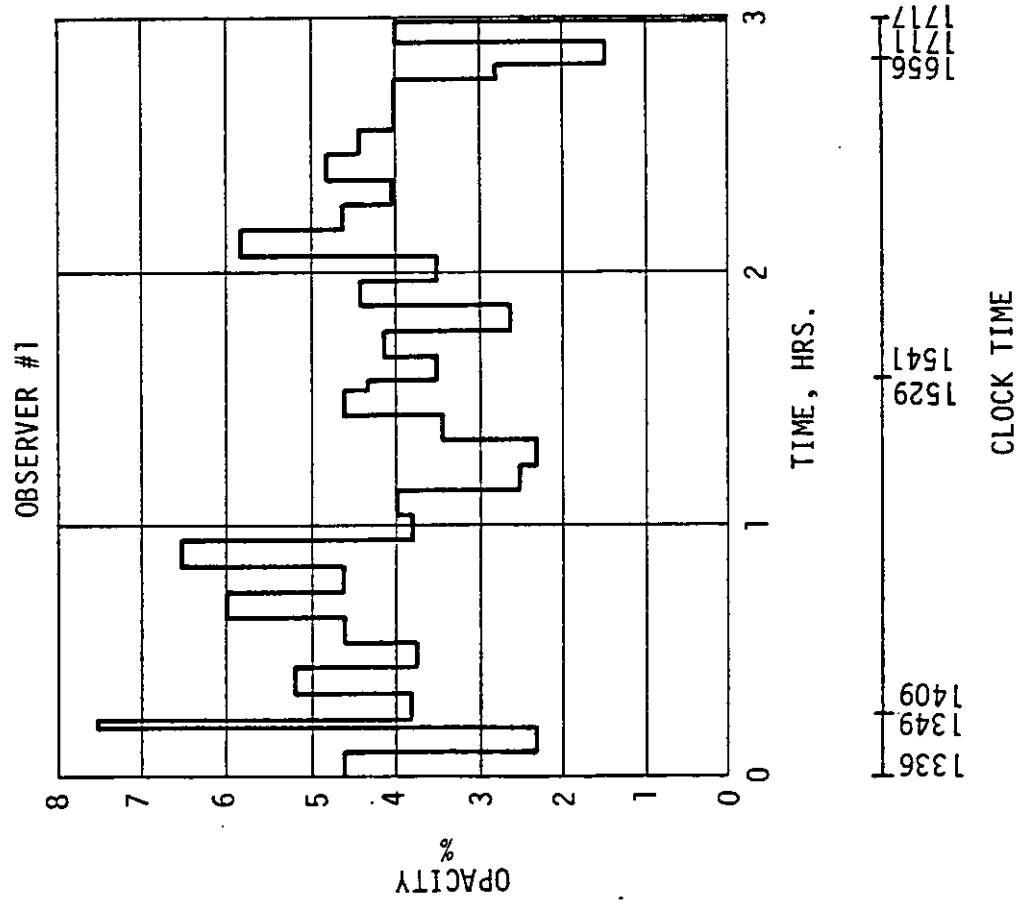

HEAF Stack Exit

Visible emissions determinations were conducted simultaneously by two observers for a cumulative observation period of six hours. On October 22, against a blue sky background, there was no detectable plume emitted from the stack. On October 24, against a blue sky background, a faint white plume exhausting from the stack was observed to have an opacity which fluctuated between 0 percent and 5 percent. On that same day after moving observer locations, readings were taken using a less contrasting background of green hills where no visible plume was detected. All visible emissions determinations were made when the asphalt roofing plant was operating at its continuous normal rate, as described in Section III. Visible emissions observations were terminated during any production upsets, slowdowns, or interruptions.

HEAF System and Connecting Ductwork

Over a cumulative period of six hours on October 21, two observers simultaneously evaluated the extent of fugitive visible emissions from the HEAF unit and its connecting ductwork. Slight puffs of white smoke were noted at the point where the filter moves through the HEAF housing but these emissions were quickly returned to the gas stream due to the negative pressure at that point. These emissions were only visible when the observer was within a few feet of the HEAF unit. Since these potential fugitive visible emissions were quickly and effectively recovered, any opacity contribution due to these potential emissions was not considered in the recorded readings.

Only a few small wisps of smoke of 5 percent opacity, lasting less than 15 seconds, were noted during the entire observation period. The opacity evaluations were performed against a dark metal background that was indoors.

Saturator Operational Line

The series of process steps for the saturator and coater is arranged in a straight continuous line approximately 100 feet long. The asphalt spraying and dipping steps followed by the strike-in operation are enclosed on all sides and hooded to a common exhaust manifold. Along the entire length of one wall of the saturator enclosure, there is a series of nine

vertical-sliding doors. Located at the end of the saturator enclosure is the coater operation which is vented to the process exhaust system via a canopy hood.

Due to the overall length of the saturator/coater line, this operation is housed in two adjacent rooms. The wall between these two rooms physically separates the spraying/dipping portion of the saturator enclosure (designated as access doors #1 through #6) from the striking-in section of the saturator line (access doors #7 through #9).

The saturator enclosure access doors must be opened frequently to allow correction of process upsets. In addition, the coating operation is not fully enclosed. Consequently, the saturator-coater operating line is a potential source of fugitive visible emissions.

On October 21, two observers simultaneously monitored the visible emissions from the saturator-coater operations. Fugitive emissions in the room surrounding the spraying/dipping steps of the saturator were observed for a cumulative period of three hours. Subsequently, fugitive emissions from the strike-in and coater sections located in the adjacent room were also evaluated for a total period of three hours. Visible emissions observations ceased whenever any production upsets, slowdowns, or interruptions occurred.

Fugitive visible emissions noted in each of the two rooms were found to predominantly occur near the top of the saturator enclosure. During all observations, these emissions appeared as white smoke. Opacity measurements were read against the dark background provided by the room ceiling that was illuminated by flood lights.

There were brief intermittent "puffs" of smoke with opacities approaching 10-15 percent above the spraying/dipping section of the saturator. The occurrence of these fugitive visible emissions was directly attributable to one of the access doors (#1 through #6) being opened to service the production line. There was a complete absence of visible emissions from this process section during continuous normal operation with all access doors closed. During the entire test program, if more than one of the

access doors were raised, testing was interrupted. Visible emissions in the other room housing the striking-in portion of the saturator enclosure and the coater were more pronounced and persistent. During the observations white visible emissions ranging in opacity from 5-15 percent were observed in the area above access door (#9) which was adjacent to the coater hood. The visible emissions observed in this area did not appear to be related to the use of the access doors. This is probably the result of the fact that the coater emissions were primarily removed via a single small diameter duct (8 inches diameter) to the main exhaust manifold. This line was apparently not large enough to handle the emissions.

PARTICLE SIZING

EPA personnel conducted particle size testing at the HEAF inlet and outlet using an out-of-stack Brink[1] impactor. The samples were collected in the field and hand carried to the EPA laboratory facilities in Durham, North Carolina, for the sizing determinations. Extreme difficulty was encountered with the laboratory analyses. Some of the impactor pans had turned over inside the shipping bottles, thereby resulting in a loss of sample. Some bottles had visible organic material on the bottle walls even though the pans were upright. Apparently, portions of the samples had vaporized and then recondensed on the inside surfaces of the bottles.

One set of samples from each of the two sampling sites was weighed. However, because of the problems with sample losses, the data were considered suspect and no calculations were performed.

PROCESS SAMPLES

Samples of unblown asphalt, saturant asphalt, coating asphalt and recovered oil were collected by the Project Officer and Process Engineer at the times indicated in the Sample Identification Log. On October 22 a sample of spent HEAF filter media and two samples of unused filter media (for blanks) were obtained. Similarly, on October 23 two more samples of the spent filter material were collected. All samples were subsequently forwarded to the Battelle facilities in Columbus, Ohio, for the prescribed analyses of each sample.

---

(1) Mention of a specific company or product does not constitute endorsement by the EPA.

Table II-20 presents the results of proximate and ultimate analyses of each of the four oil/asphalt process samples. Particular components of the proximate analysis were determined by the following ASTM standards:

D3173 - Moisture
D3174 - Ash
D3175 - Volatile Matter

The quantity of Fixed Carbon was calculated as the difference between 100 percent and the sum of the percentage amounts of the three above constituents. Along with the contents of ash and moisture, determinations of the other components of the ultimate analysis were conducted in accordance with ASTM standards listed below:

D3177 - Sulfur
D3178 - Carbon and Hydrogen
D3179 - Nitrogen

Oxygen content was calculated by the difference between 100 percent and the sum of the other six fractions present.

A sample of the unused HEAF filter medium and a sample of spent filter material were subjected to both proximate and ultimate analyses by the same ASTM standards. The results of those determinations have been tabulated in Table II-21. It should be noted that the spent filter material consists of both the filter medium itself and also any material removed from the exhaust stream and entrapped on the filter. The composition of the material collected on the filter has been calculated by employing an ash balance on the filter medium before and after use. This balance permits a rough determination of the mass of individual fractions from which proximate and ultimate analyses can be generated. Table II-22 illustrates the calculated contents of the material collected on the filter. The ash balance employed in this determination is presented in Appendix D, Section III.

A portion of the unblown asphalt sample was analyzed for trace metals content using an optical emission spectrograph. The results of that analysis are presented in Table II-23.

TABLE II-20

PROCESS SAMPLE ANALYSES

	SAMPLE DESCRIPTION AND NUMBER			
	Unblown Asphalt S75-007-068	Saturant Asphalt S75-007-066	Coating Asphalt without Filler S75-007-070	Recovery Oil S75-007-067
	As received	As received	As received	
Proximate Analysis, wt.%				
o Volatile Matter	89.43	86.43	70.36	95.26
o Fixed Carbon	8.37	13.30	14.50	0.00
o Ash	0.05	0.24	0.22	0.02
o Moisture	2.15	0.03	14.92	4.72
Ultimate Analysis, wt.%				
o Ash	0.05	0.24	0.22	0.02
o Moisture	2.15	0.03	14.92	4.72
o Carbon	76.54	78.52	67.13	73.73
o Hydrogen	5.32	5.45	4.65	5.12
o Sulfur	3.00	1.97	1.71	0.90
o Nitrogen	1.30	1.48	1.24	0.34
o Oxygen	11.64	12.31	10.13	15.17
Heat Content				
o BTU per lb, as received	18,086	18,404	15,554	17,772

TABLE II-21

HEAF FILTER ANALYSES

	SAMPLE DESCRIPTION AND NUMBER	
	Unused HEAF Filter Material-Blank S75-007-063	Spent HEAF Filter Material[a] S75-007-072
Proximate Analysis, wt.%		
o Volatile Matter	9.80	46.40
o Fixed Carbon	1.12	4.42
o Ash	88.47	40.96
o Moisture	0.61	8.22
Ultimate Analysis, wt.%		
o Ash	88.47	40.96
o Moisture	0.61	8.22
o Carbon	8.57	39.78
o Hydrogen	0.60	2.76
o Sulfur	0.24	0.50
o Nitrogen	0.05	1.64
o Oxygen	1.46	6.14
Heat Content		
o BTU per lb, as received	1,265	7,491

[a] Includes filter material and material collected by the HEAF.

TABLE II-22

COMPUTED ANALYSIS
OF COLLECTED MATERIAL

"Mass", lb./lb. of Filter Medium

	Blank	Spent Filter	Collected Material[a]	Calculated Analysis of Collected Material, wt.%
Proximate				
o Volatile matter	0.0980	1.0025	0.9045	77.94
o Fixed Carbon	0.0112	0.0955	0.0843	7.26
o Ash	0.8847	0.8849	0.0002	0.02
o Moisture	0.0061	0.1776	0.1715	14.78
TOTAL	1.0000	2.1605	1.1605	100.0
Ultimate				
o Ash	0.8847	0.8849	0.0002	0.02
o Moisture	0.0061	0.1776	0.1715	14.78
o Carbon	0.0857	0.8595	0.7738	66.68
o Hydrogen	0.0060	0.0596	0.0536	4.62
o Sulfur	0.0024	0.0108	0.0084	0.72
o Nitrogen	0.0005	0.0354	0.0349	3.01
o Oxygen	0.0146	0.1327	0.1181	10.18
TOTAL	1.0000	2.1605	1.1605	100.0

[a] Collected Material = $\text{"Mass"}_{\text{spent filter}} - \text{"Mass"}_{\text{blank}}$

TABLE II-23

TRACE METALS ANALYSIS

Unblown Asphalt (S75-007-068)

	ppm by weight
Ag	< 0.005
As	< 0.06
B	< 0.02
Ba	10
Be	< 0.002
Ca	60
Cd	< 0.06
Cr	0.6
Cu	0.6
Fe	20
K	10
Li	< 0.2
Mg	4
Mn	0.2
Na	80
Ni	20
Pb	40
Sb	< 0.06
Si	6
Sn	0.4
Sr	0.6
V	60
Zn	6

Note: Not analyzed for F, Hg and Se

Due to the volatility of the process samples, some uncertainty existed concerning the effect of evaporative loss upon analytical results. As part of a broad-based exploratory program designed to aid this and other similar tasks, one sample of recovery oil was exposed to atmospheric room conditions within the laboratory (approximately 75°F). The change in weight of the sample was periodically monitored for several days. The weight loss by evaporation is indicated below.

AIR DRYING OF OIL SAMPLES

Time (Hours)	Recovery Oil Weight (Grams)
0	1003.2
16	998.0
42	991.7
64	987.5
87	985.9

SECTION III

PROCESS DESCRIPTION AND OPERATIONS

The asphalt roofing manufacturing plant has two manufacturing lines, one for saturated felt and another for producing shingles and rolls. The line producing shingles/rolls is designated as Line 1 and the other as Line 2. Emission tests were conducted only on Line 1, and hence, this discussion is limited to that line.

PROCESS DESCRIPTION

The first step in the shingle manufacturing process is saturation of felt with asphalt. At this Celotex plant, the saturating operation is carried out by spraying the felt on one side with hot asphalt and then dipping the felt in hot asphalt at about 450°F. Hot asphalt is sprayed onto only one side so that moisture present in the felt can easily escape and prevent subsequent blistering of the shingles. After saturation, the felt passes through a "strike-in" drum section consisting of two rollers which squeeze in the surface asphalt and enhance asphalt permeation through the felt. The felt then goes through a hot looper section prior to being coated with coating asphalt. The coating asphalt differs from saturating asphalt in that it has a softening point range of about 210 to 220°F compared to 130 to 140°F for saturant. Another major difference is that coating asphalt has about 50 percent filler (rock dust) by weight. The addition of coating asphalt onto the felt gives the product (i.e., shingle) the strength to withstand the elements and serves as an adhesive bed for the granules. After the application of coating asphalt, granules are imbedded on one side of the felt and a backing agent (talc) on the other. The product is then cooled, cut, and packaged.

Emission sources that were monitored during the tests include the saturator, strike-in section, hot looper, and the coater. All of these sources were controlled by a HEAF (high energy air filtration) unit. The same unit also controlled emissions from the main asphalt storage tank and seven in-process storage tanks. A schematic of the sources controlled by the HEAF unit, including testing points, is shown in Figure III-1.

SCHEMATIC OF EMISSION SOURCES CONTROLLED BY HEAF INCLUDING TEST POINT (TP) AT CELOTEX'S LOS ANGELES ROOFING PLANT

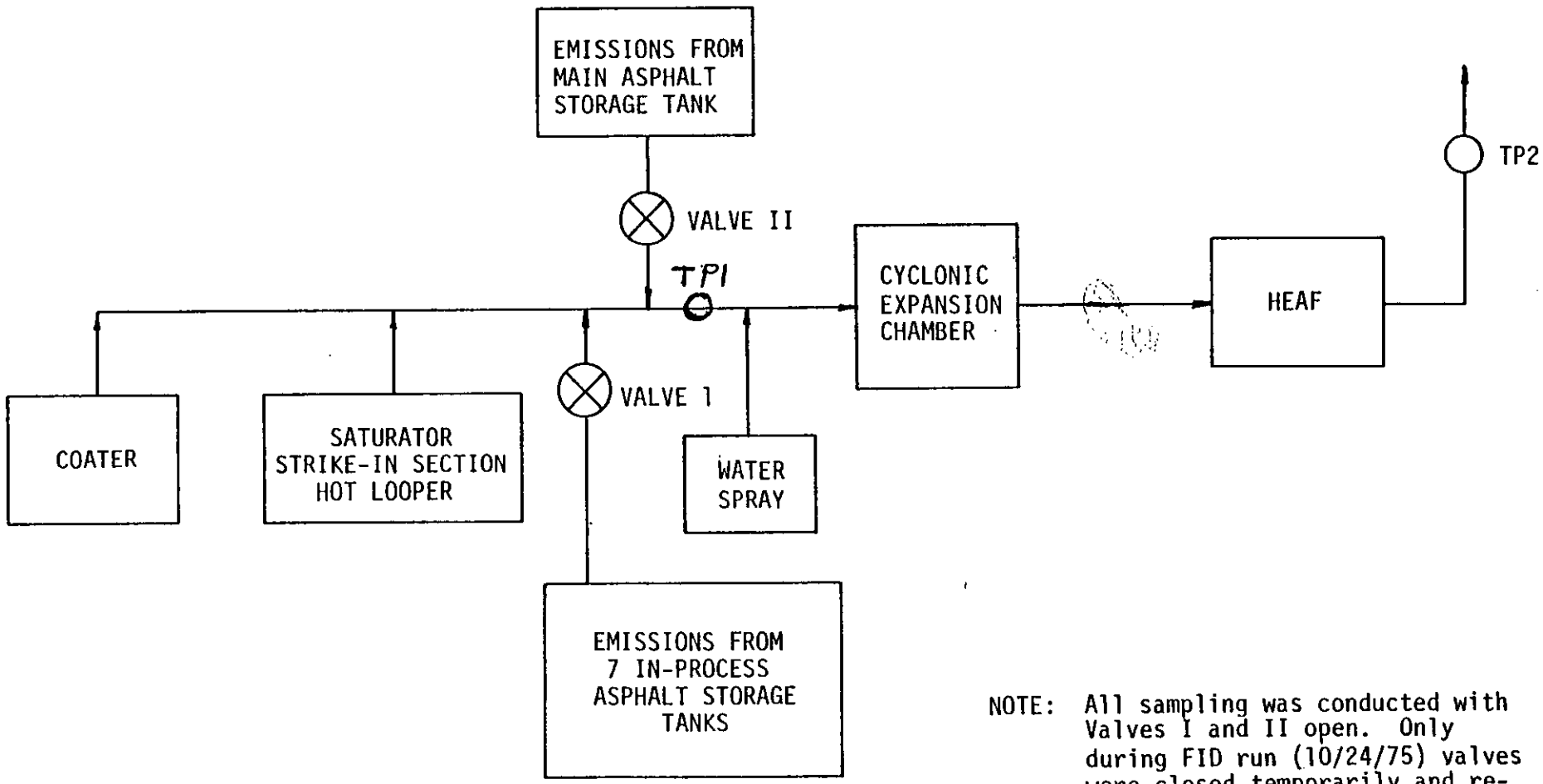

NOTE: All sampling was conducted with Valves I and II open. Only during FID run (10/24/75) valves were closed temporarily and re-opened to determine contribution of emissions from tanks.

FIGURE III-1

The saturator hood encloses the saturator, the strike-in section and the hot looper. The hood extends all the way to the floor and contains doors with 3 ft x 2 ft metal ports which can be opened for inspection. The coating area is enclosed with canvas from a height of about 6 ft above floor level. This acts as its hooding and is enveloped by the saturator enclosure. The HEAF unit controlling all of these sources including the storage tanks, as stated above, has a capacity of 22,000 acfm. There are two blowers (15 HP and 200 HP) which transport the fumes to the HEAF unit; the 15-HP blower precedes the HEAF and the 200-HP blower is after the HEAF unit. In addition, there are two other blowers one near the main asphalt storage tank and another at an "in-process" storage tank. Manufacturer's details on the HEAF blower are shown below:

Manufacturer: U.S. Electric Motors
Division of Emerson Electric
Milford, Connecticut

HP: 200
Type: R
Design B Code G
ID No. C 2941-00-173 83-02101
Motor RPM: 1,775
460V, 237 amps

There are several types of HEAF units. The Celotex (LA) plant has a Rotary Drum (DF) HEAF unit. It is a fully automatic system. Figure III-2 is an arrangement sketch of a typical Rotary Drum HEAF unit. The Celotex (LA) unit differed from this sketch in that the filter media entered and exited the cabinet from the opposite side. The Rotary Drum HEAF unit utilized a cylindrical perforated drum around which a stainless steel screen is wrapped. The stainless steel screen exits the filtration cabinet at the bottom of the cabinet, passes around an adjustable tension idler roll, and re-enters the filter cabinet on an upward slope at about mid-point in the front of the cabinet. Movement of the screen is provided by movement of the rotary drum which is driven by a small horsepower gear motor mounted at the end of the drum opposite the fan suction. The filter media rides on this screen and is drawn around the filter drum by the screen. At the point where

ROTARY DRUM HEAF UNIT

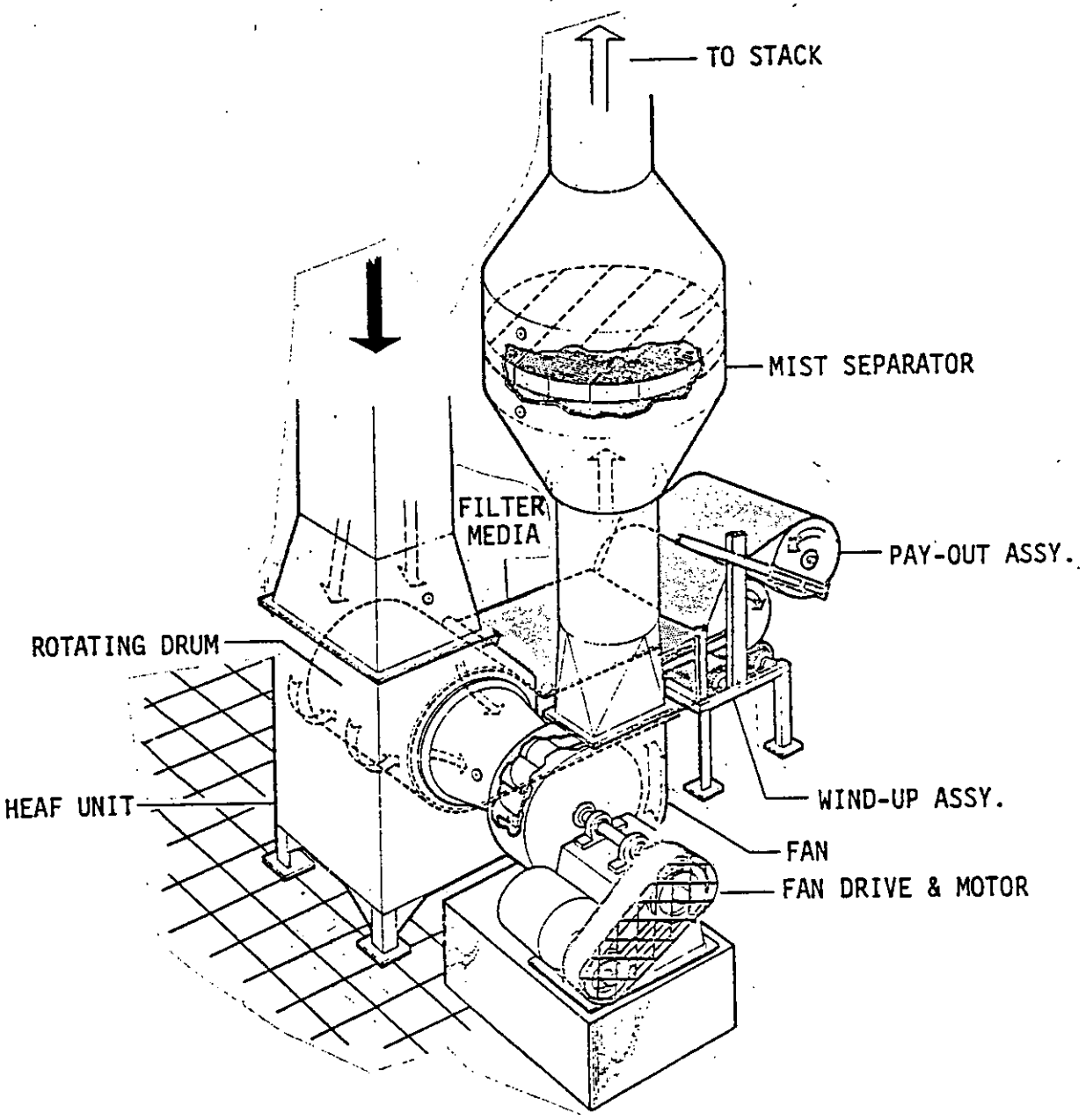

the screen and the filter media enter the cabinet, a curved stainless steel plate compresses the filter media and acts as a seal to prevent air from leaking into the cabinet. The same type of seal mechanism is provided at the exit point for the screen and the filter media. Figure III-3 shows the drum and screen mechanism used in the Rotary Drum unit. Two hundred fifty degrees of the drum is used as an active filtration surface. The remaining 110° does not provide a filtration surface because it is contained in the space btween the two seals and because it has no filter media on it.

The Rotary Drum HEAF unit is typically operated at a differential pressure across the filter media of about 28 inches H_2O. Filtration velocities at the face of the filter mat preferably range between 1,500 and 1,700 ft/min. It is necessary to insure that the differential pressure in the ductwork leading into the Rotary Drum HEAF unit is low enough to prevent negative pressures in excess of about 1 inch H_2O from developing at the inlet to the HEAF unit. The Celotex (LA) plant uses a vane-axial fan mounted directly in the ductwork leading to the HEAF unit to achieve such an inlet condition. The vane-axial fan is provided with a variable pitch drive pulley so that its speed can be increased or decreased sufficiently to provide approximately -0.2 inches H_2O at the inlet to the HEAF unit. The variable speed drive is necessary because if the pressure at the inlet to the HEAF unit becomes positive, contaminated gas will leak from the seals into the immediate surroundings.

Fumes are cooled upstream of the HEAF unit with a single manually-controlled atomized-water spray. According to plant personnel, the cooling apparently reduces or eliminates the opacity of the stack emissions. All emission tests were conducted with the cooling system "on"; therefore, the effect of cooling on the performance of the HEAF unit could not be determined. The fumes passed through a cyclonic expansion chamber that promoted mixing and cooling of the gaseous stream. The temperature of fumes entering the HEAF, after cooling, varied from 94°F to 125°F. The HEAF stack was equipped with a demister which operated at about 0.3 inches H_2O pressure drop. The pressure drop across the HEAF media averaged about 29 inches H_2O.

HEAF FILTER DRUM AND MEDIA

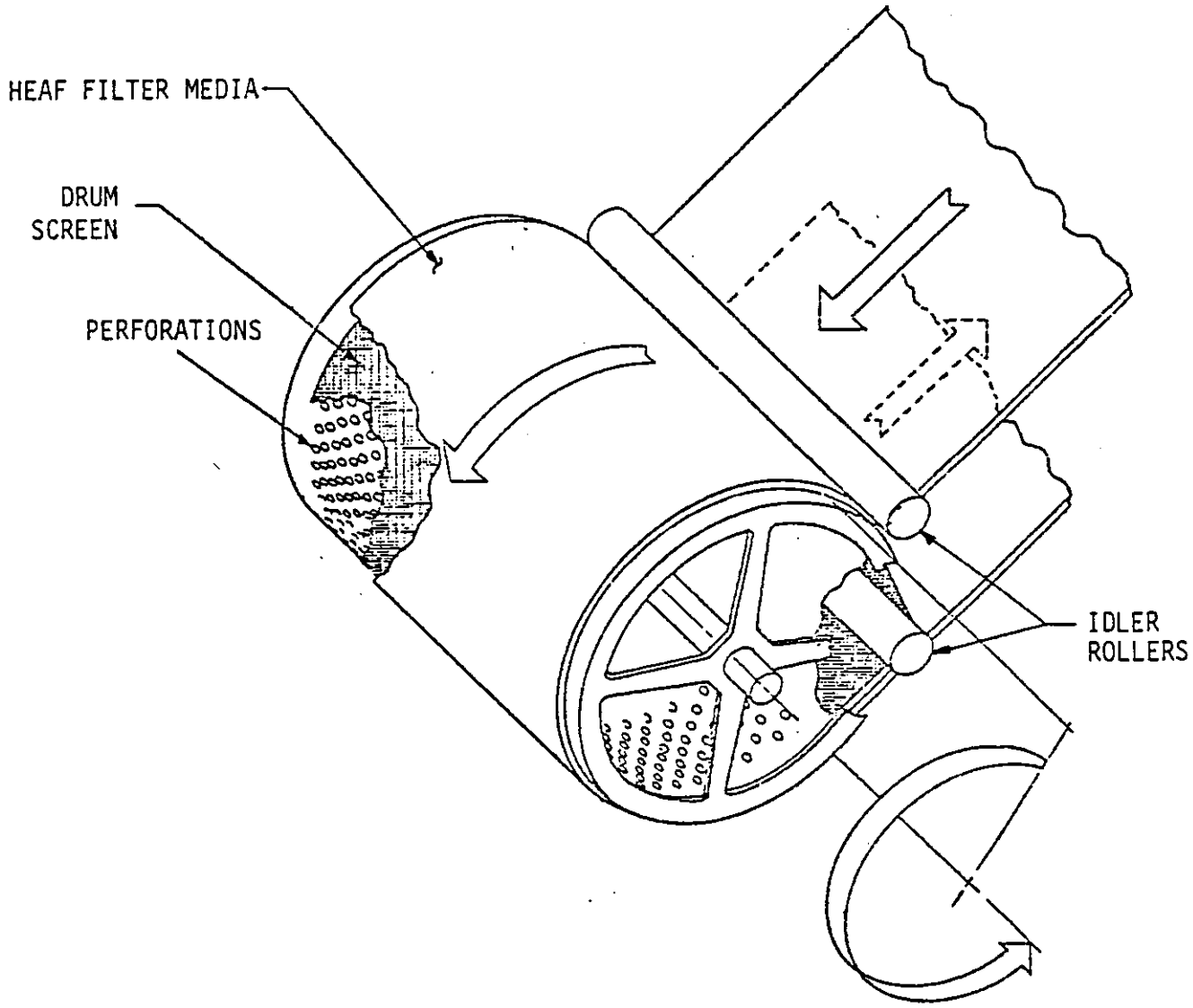

PROCESS OPERATION

Plant operation was considered to be normal when the manufacturing line speed was $\geq$ 200 feet per minute or at least 80 percent of the normal maximum operating speed for the product being produced. At speeds lower than this value, sampling was usually stopped unless it was only for an extremely short time. For durations of 2 to 3 minutes it was presumed inadvisable to stop and resume sampling since errors introduced by doing so would be quantitatively insignificant. Sampling was also conducted only when shingles were being manufactured. The type of shingles made (strip or hex strip) affected the line speed since hex strip shingles had to be manually packaged. Also, different types of shingles require different types of granules. For instance, the 240 lb seal down shingles used No. 8 granules which are coarser than the No. 11 granules that are used in producing a shingle called "Regency 25 lb Desert dust". This variation in granule type also altered the weight of the product. However, since product weights were obtained on an hourly basis during sampling, this did not affect production rate calculations.

The production rate of the line was determined from the number of pallets made, the weight of the pallet, and the downtime. The number of pallets made and their weights were obtained from the fork lift driver who recorded them for each hour and sometimes during each half hour. There were no counters available to check the production rates or to determine felt usage rates. Also, scrap discraded could not be estimated. Operating parameters such as line speed, saturant temperature, unfilled coating temperature, filler temperature, pressure drop across HEAF, etc., were recorded from plant charts and gauges. All of the process conditions, including production rates that were recorded during the emissions tests, are presented in Section IV of Appendix B. The shingle production rates, asphalt usage rates, and line speeds observed during the tests are summarized in Table III-1. A summary of the HEAF operating conditions is presented in Table III-2.

TABLE III-1

SUMMARY OF LINE SPEEDS, SHINGLE PRODUCTION AND ASPHALT USAGE RATES

Date and sampling time	Pollutants sampled	Actual sampling time (min)	Number of interruptions to sampling[a/]	Process parameters observed during sampling period[b/]: Line speed (ft/min) Min.	Max.	Weighted average[c/]	Shingle production rate (tons/hr)	Estimated asphalt usage rate[d/] (tons/hr): Saturant	Coating
October 21, 1975 12:58 p.m.-4:30 p.m.	Particulates and gaseous HC	144	4	210	300	256.5	22.6	3.1	2.7
October 22, 1975 10:03 a.m.-2:17 p.m.	Particulates and gaseous HC	144	6	200	260	226.7	21.7	2.8	2.8
October 23, 1975 1:50 p.m.-5:50 p.m.	FOMs	144	3	130	210	147.5	16.9	2.3	2.4
October 24, 1975 9:55 a.m.-2:05 p.m.	Particulates and gaseous HC	144	4	130	295	270.8	18.8	2.9	3.2

a/ Either due to felt breaks, speed being too low for sampling, sample port changes or sample nozzle change.

b/ Excluding period when sampling was interrupted.

c/ Based on time intervals and line speed readings using the relationship $\frac{\Sigma V.\Delta t}{\Sigma \Delta t}$.

d/ Based on period when tank levels were obtained. This could not be restricted to actual sampling time (see Table III-2).

Quantities of asphalt used during the testing were estimated from tank level and temperature readings monitored by the EPA project officer as shown in Section V of Appendix B. These data do not correspond with production or actual sampling times. However, the clock times are close enough for approximating asphalt consumption rates on an hourly basis during sampling. Table III-2 summarizes the calculated asphalt usage rates.

Characteristics of raw materials, primarily felt and asphalt, used in producing shingles during the tests were obtained from plant personnel. These are included in Section IV of Appendix B. Felt characteristics include felt width, moisture content, kerosene value, etc. Asphalt characteristics include softening point, penetration, flash point, etc. The percent saturation of felt (with asphalt) is also shown. According to plant personnel, variations observed in the characteristics during testing were normal and within their specifications. Table III-3 is a summary of key specifications for raw materials and product that were collected and recorded during sampling periods.

TABLE III-2

SUMMARY OF HEAF CONTROL SYSTEM OPERATING CONDITIONS

Date	Time Span	Readings	Temperature Filter Inlet °F	Temperature Filter Outlet °F	Pressure, Filter Inlet PSIG	Pressure Drop At Filter PSI	Filter Travel Inches
10/21/75	12:59 pm	Min.	-	100	-0.38	27.6	
	-4:26 pm	Max.	-	112	-0.02	29.1	
		Avg.	-	109	-0.22	28.2	134 1/2
10/22/75	9:24 am	Min.	-	91	-0.42	27.5	
	-4:50 pm	Max.	-	111	+0.10	29.1	
		Avg.	-	104	-0.15	28.4	246 1/2
10/23/75	1:45 pm	Min.	94	89	-0.48	27.8	
	-5:47 pm	Max.	123	112	+0.40	29.2	
		Avg.	109	101	-0.05	28.8	142
10/24/75	9:55 am	Min.	108	99	-0.36	28.1	
	-1:54 pm	Max.	125	115	+0.14	29.5	
		Avg.	116	107	-0.04	28.8	142
10/24/75	3:40 pm	Min.	105	98	-0.60	27.4	
	-5:20 pm	Max.	117	108	+0.26	29.5	
		Avg.	113	104	-0.11	28.8	-

TABLE III-3

RAW MATERIAL AND PRODUCT SPECIFICATIONS[a] COLLECTED AND OBSERVED DURING SAMPLING PERIODS

Date and sampling time	Felt (% moisture)			Asphalt						Weight of shingles (lb/pallet)[b]		
				Saturant			Unfilled coating					
	Min.	Max.	Overall average	Softening point (°F)	Penetration	Flash point (°F)	Softening point (°F)	Penetration	Flash point (°F)	Min.	Max.	Overall average
October 21, 1975 12:58 p.m.-4:30 p.m.	4.5	5.4	4.9	134.5	45.5	545	215-218.5	18-19.5	515-520	2,725	2,775	2,750
October 22, 1975 10:30 a.m.-2:17 p.m.	4.5	8.3	5.6	134.5	45.5	545	215-218.5	18-19.5	515-520	2,675	2,840	2,777
October 23, 1975 1:50 p.m.-5:50 p.m.	4.5	8.0	5.7	134.5	45.5	545	215-218.5	18-19.5	515-520	1,950	2,050	1,988
October 24, 1975 9:55 a.m.-2:05 p.m.	3.5	5.3	4.4	134.5	45.5	545	215-218.5	18-19.5	515-520	2,800	2,810	2,805

a/ Data supplied by plant personnel.
b/ Based on hourly readings obtained from fork lift driver at plant.

SECTION IV

LOCATION OF SAMPLING SITES

PARTICULATE, GASEOUS HYDROCARBON, POM SAMPLES, AND PARTICLE SIZING

HEAF Inlet

The HEAF inlet sampling site was located in a horizontal section of round duct on the roof above the filter unit. A sketch of the sampling site is shown in Figure IV-1. Two 3-inch pipe-nipple sampling ports were installed; one on the side of the duct and the other on the top. The ports were located near the downstream end of a long-radius, approximately 45°, horizontal bend. The duct was 40 inches ID and the bend radius was approximately 130 inches. At the upstream entrance to the bend the duct diameter gradually decreased from 40 to 36 inches ID over a 40 inch length of straight duct. Attached to the entrance of this transition section was a tube-axial fan. Upstream of the fan, the duct branched into several manifold sections which were connected to the saturator/coater line hoods. A 4 inch vent line from the asphalt heating kettle and a 6 inch vent line from the asphalt storage tanks both joined the main exhaust duct upstream of the axial fan. The distance from the fan to the sampling ports was 122 inches (approximately 3 duct diameters). Excluding the transition section reduced this length to 82 inches, or about 2 duct diameters.

A single water spray nozzle was located inside the duct approximately 6 inches downstream of the sample ports. The nozzle was pointed downstream and occupied negligible area within the duct. Thus, it was assumed that the nozzle would not interfere with sampling or create an appreciable flow disturbance. Approximately 38 inches downstream of the sampling ports the duct entered a vertical downcomer expansion chamber which carried the exhaust gases to the HEAF unit. The downcomer was about 75 inches in diameter, and the duct entered the downcomer tangentially. The 38 inch average dimension for the downstream duct length equaled 0.95 undisturbed duct diameters.

HEAF INLET SAMPLING SITE

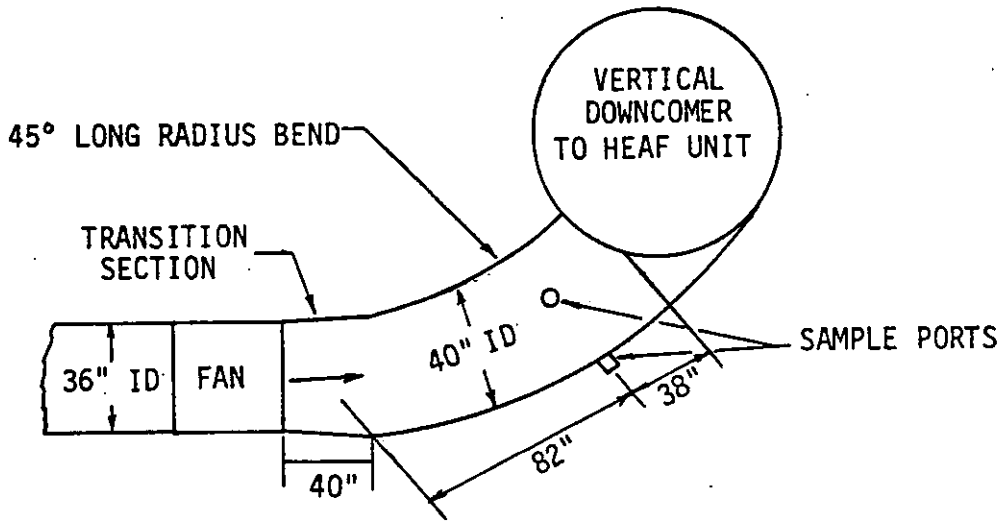

PLAN

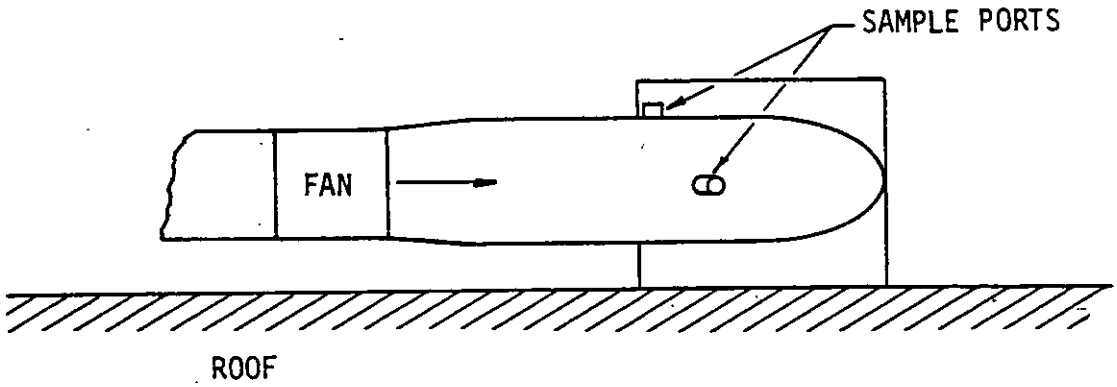

ELEVATION

Because the inlet sampling ports were located in a curving duct rather than a straight duct, the inlet site did not strictly conform to the specifications of EPA Method 1. However, the site chosen represented the best available inlet location. The inlet sampling data was to be used for determining desired emission test data as well as providing efficiency information for the emissions control device. Considering these objectives and the fact that the duct curvature was gradual, the site was considered to be acceptable for performing emission tests that would yield representative test data.

Forty traverse points were originally selected for the inlet site. This was based on the fact that the fan was the nearest upstream disturbance. However, because of the nonideal duct configruation, it was decided to sample 48 points, 24 along a horizontal diameter traverse and 24 along a vertical diameter traverse. These points were located as specified by Table 1-1 of EPA Method 1. Figure IV-2 shows the cross-sectional view of the duct at the sampling location and lists the exact distance from the outside of the sampling port to each traverse point. The location of traverse points, 1, 24, 25, and 48 was calculated to be less than 1 inch from the duct wall. Sampling within 1 inch of the duct wall is not recommended, thus sampling at these four points was conducted at 1 inch from the wall. The same point numbering sequence and point locations were used for all testing conducted at the HEAF inlet.

HEAF Outlet

The cleaned gases exiting the HEAF unit were ducted to a large induced draft fan which was adjacent to the HEAF. Normally at the Celotex (LA) plant the gases are discharged from the primary fan through a demister and a sound reducing muffler prior to being discharged to the atmosphere. There was no stack on the muffler vertex. The demister was located just above the building roof. The combined height of the demister and muffler resulted in the effluent gas being discharged about 25 feet above the roof level. The roof itself was nearly 25 feet above ground level. In order to meet the necessary EPA SPNSS test specifications it was required that a stack extension be installed at the existing site. To install a stack on the muffler, discharge would have

SCHEMATIC OF SAMPLING LOCATION
HEAF UNIT INLET

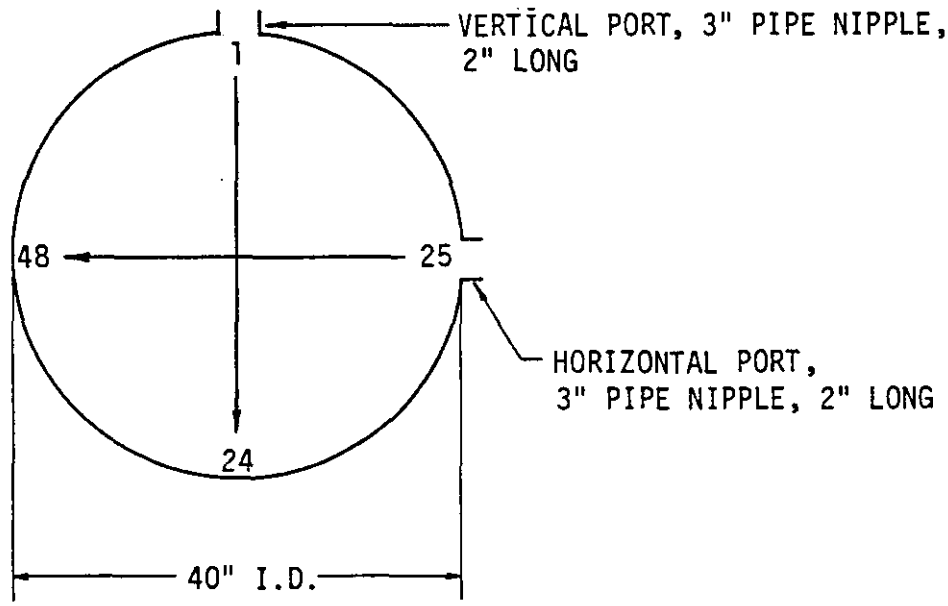

TRAVERSE POINT NO.	TRAVERSE POINT LOCATION FROM OUTSIDE NIPPLE(IN.)	TRAVERSE POINT NO.	TRAVERSE POINT LOCATION FROM OUTSIDE NIPPLE(IN.)
1	3	25	3
2	3 1/4	26	3 1/4
3	4 1/4	27	4 1/4
4	5 1/8	28	5 1/8
5	6 1/4	29	6 1/4
6	7 1/4	30	7 1/4
7	8 1/2	31	8 1/2
8	9 3/4	32	9 3/4
9	11 1/4	33	11 1/4
10	12 7/8	34	12 7/8
11	14 7/8	35	14 7/8
12	17 7/8	36	17 7/8
13	26 1/8	37	26 1/8
14	29 1/8	38	29 1/8
15	31 1/8	39	31 1/8
16	32 3/4	40	32 3/4
17	34 1/4	41	34 1/4
18	35 1/2	42	35 1/2
19	36 3/4	43	36 3/4
20	37 3/4	44	37 3/4
21	38 7/8	45	38 7/8
22	39 3/4	46	39 3/4
23	40 3/4	47	40 3/4
24	41	48	41

been extremely difficult and impractical because of the additional weight, height and lack of available supportive members. Instead, the EPA Project Officer requested that the muffler be removed and a temporary light-weight stack extension be attached to the demister outlet. Construction staging was erected which surrounded the stack, providing access to the sampling ports. A sketch of the outlet site, as tested, is provided in Figure IV-3.

The temporary outlet stack extension was 36.75 inches ID and was 15 feet long. Two 3-inch pipe-nipple ports were installed at 90 degrees along the stack circumference. The ports were 12 feet above the stack inlet and 3 feet below the stack exit. Thus, the nearest upstream disturbance (the demister outlet) was nearly 4 duct diameters below the sampling ports, and the downstream disturbance (the stack outlet) was essentially 1 duct diameter above the ports. For this stack configuration, EPA Method 1 specifies a minimum of 36 sampling points. However, in order for the inlet and outlet tests to correspond directly, the EPA Project Officer directed that 48 sampling points be selected for the outlet testing. These points were located as specified by Table 1-1, EPA Method 1; 24 points along each of two stack diameters oriented at 90° to each other. As with the inlet points, the four points nearest the stack wall were calculated to be within 1 inch of the wall and these points were repositioned to be 1 inch away from the wall. Figure IV-4 shows the stack cross section through the plane of the sampling ports and also gives the exact sampling point locations referenced to the outside edge of the sampling ports. The point locations and numbering system were the same for all outlet tests.

SULFUR DIOXIDE SAMPLES

During the third set of simultaneous inlet and outlet particulate tests a continuous sample was extracted from the HEAF outlet stack for SO_2 analyses. This continuous gaseous sample was extracted through an existing port located in the demister outlet just below the base of the temporary stack. The ID of this section was approximately 36.5 inches. A stainless steel probe was inserted into the stack to a depth of 26 inches. All sampling was conducted at this single point using an electrochemical monitoring analyzer.

HEAF OUTLET SAMPLING SITE

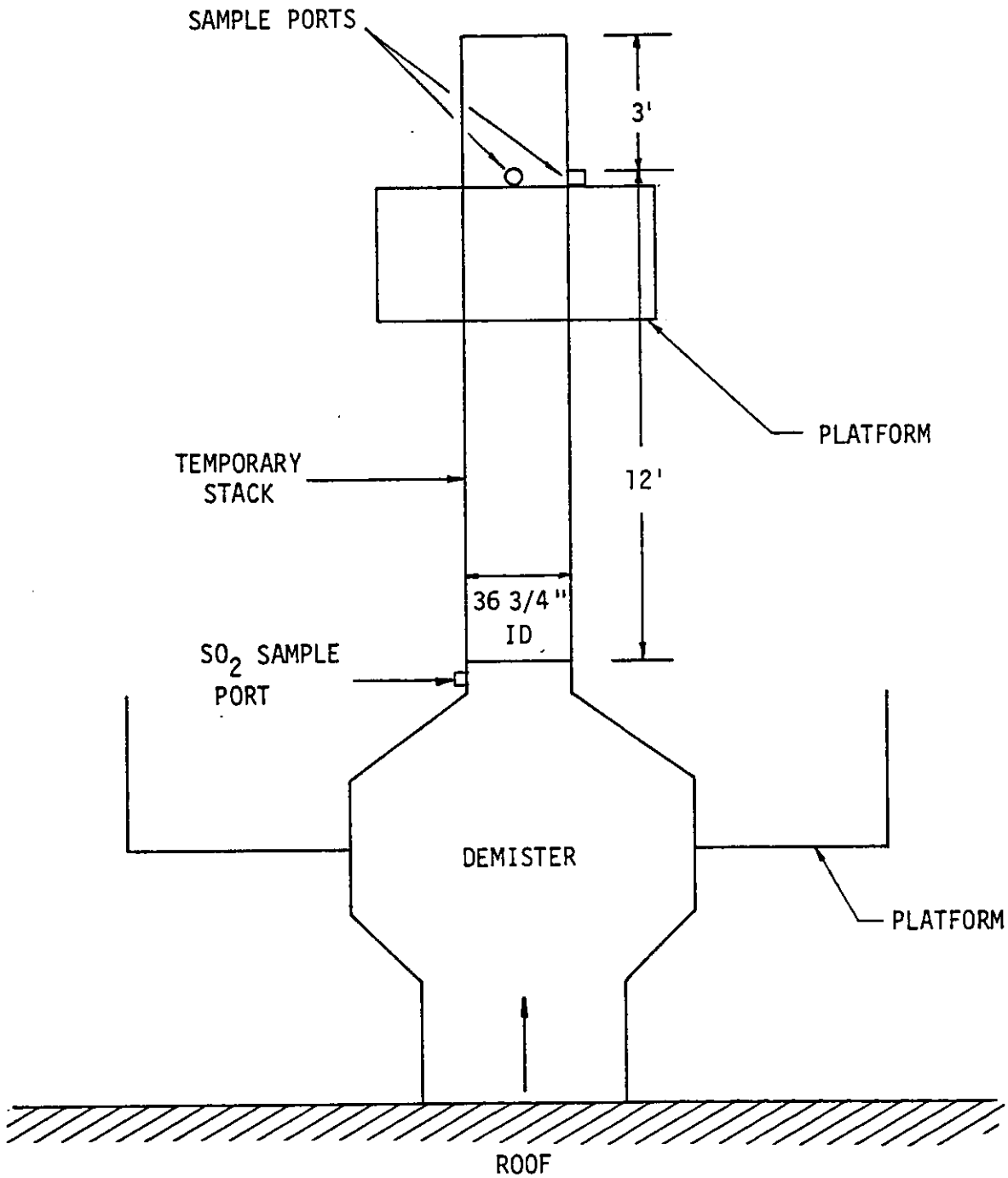

ELEVATION

SCHEMATIC OF SAMPLING LOCATION
HEAF UNIT OUTLET

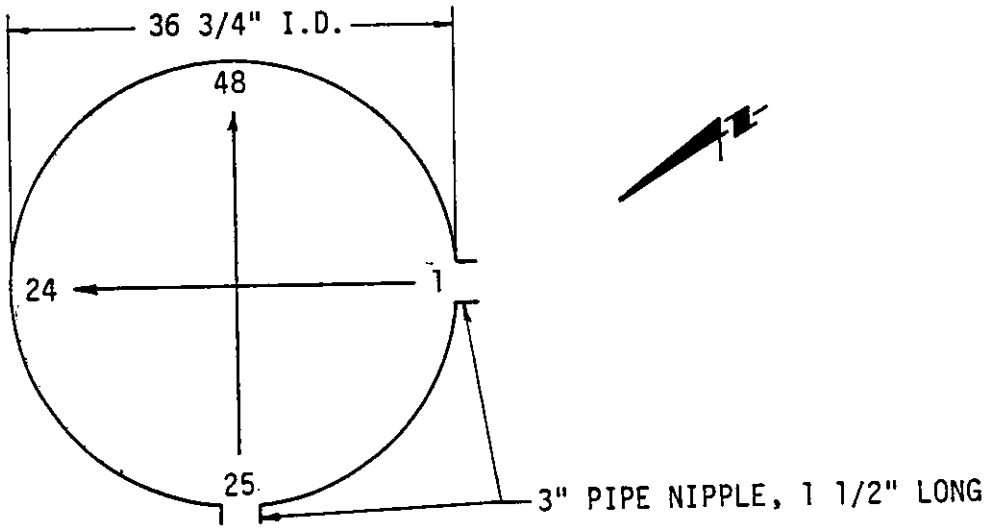

TRAVERSE POINT NO.	TRAVERSE POINT LOCATION FROM OUTSIDE NIPPLE(IN.)
1	2 1/2
2	2 5/8
3	3 1/2
4	4 3/8
5	5 3/8
6	6 3/8
7	7 3/8
8	8 5/8
9	10
10	11 1/2
11	13 3/8
12	16 1/8
13	23 5/8
14	26 3/8
15	28 1/4
16	29 3/4
17	31 1/8
18	32 3/8
19	33 3/8
20	34 3/8
21	35 3/8
22	36 1/4
23	37 1/8
24	37 1/4

TRAVERSE POINT NO.	TRAVERSE POINT LOCATION FROM OUTSIDE NIPPLE(IN.)
25	2 1/2
26	2 5/8
27	3 1/2
28	4 3/8
29	5 3/8
30	6 3/8
31	7 3/8
32	8 5/8
33	10
34	11 1/2
35	13 3/8
36	16 1/8
37	23 5/8
38	26 3/8
39	28 1/4
40	29 3/4
41	31 1/8
42	32 3/8
43	33 3/8
44	34 3/8
45	35 3/8
46	36 1/4
47	37 1/8
48	37 1/4

VISIBLE EMISSIONS OBSERVATIONS

Figure IV-5 indicates the relative position of the four different observation sites employed to evaluate the HEAF stack effluent. These locations were chosen in order to conform to EPA Method 9 specifications. The stack discharge was approximately 50 feet above ground level. Observers were positioned at distances of 80-120 feet from the stack. Heights of the observation points ranged from ground level to about 60 feet above grade.

HEAF Fugitive Emissions

When observing the futiive visible emissions from the HEAF unit and its associated ductwork, the two observers were oriented in the room housing this equipment as depicted in Figure IV-6. Intermittent emissions were noted from the filter approximately 6 feet above floor level. The observers were positioned approximately 15 feet from the emission sources.

Saturator/Coater Fugitive Emissions

The observation sites used in evaluating the saturator-coater fugitive visible emissions are shown in Figure IV-7. Observations of emissions emitted from the spraying/dipping section of the saturator were recorded from points 1 and 2 in one room. Because this room was particularly dark, portable flood lights were installed and directed toward the ceiling in order to assist in illuminating the observation area. Sparcely occurring fugitive emissions were detected approximately 15 feet above the floor at distances of 10-50 feet from the observer. Points 3 and 4 in the adjacent room designate the observer locations relative to the strike-in section of the saturator and to the coater area near the No. 9 access door. Consistent fugitive emissions from this process section were also detected at 15 feet above the floor at distances of 10-30 feet from the observer.

PROCESS SAMPLES

Throughout the testing period various process samples were collected. Included were samples of unblown asphalt, saturant asphalt, coating asphalt, recovered oil/asphalt, and both unused and spent HEAF filter media. These samples were obtained directly from the applicable process units/operations. A list of all collected process samples is included in the Sample Identification Log continaed in Section I of Appendix D.

PLAN VIEW: POSITIONS FOR OBSERVATION OF EMISSIONS FROM STACK

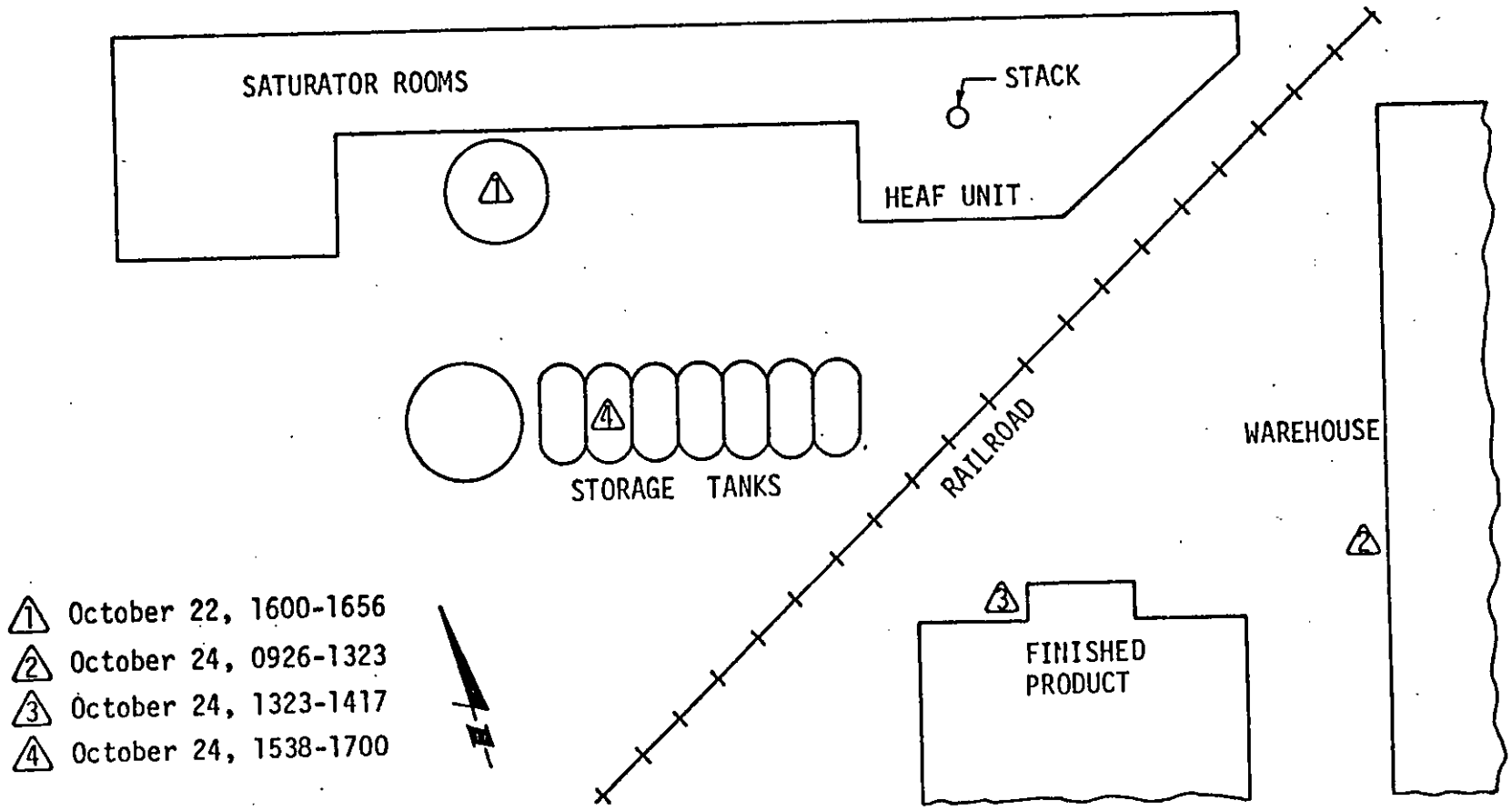

PLAN VIEW: POSITIONS FOR OBSERVATION OF HEAF UNIT

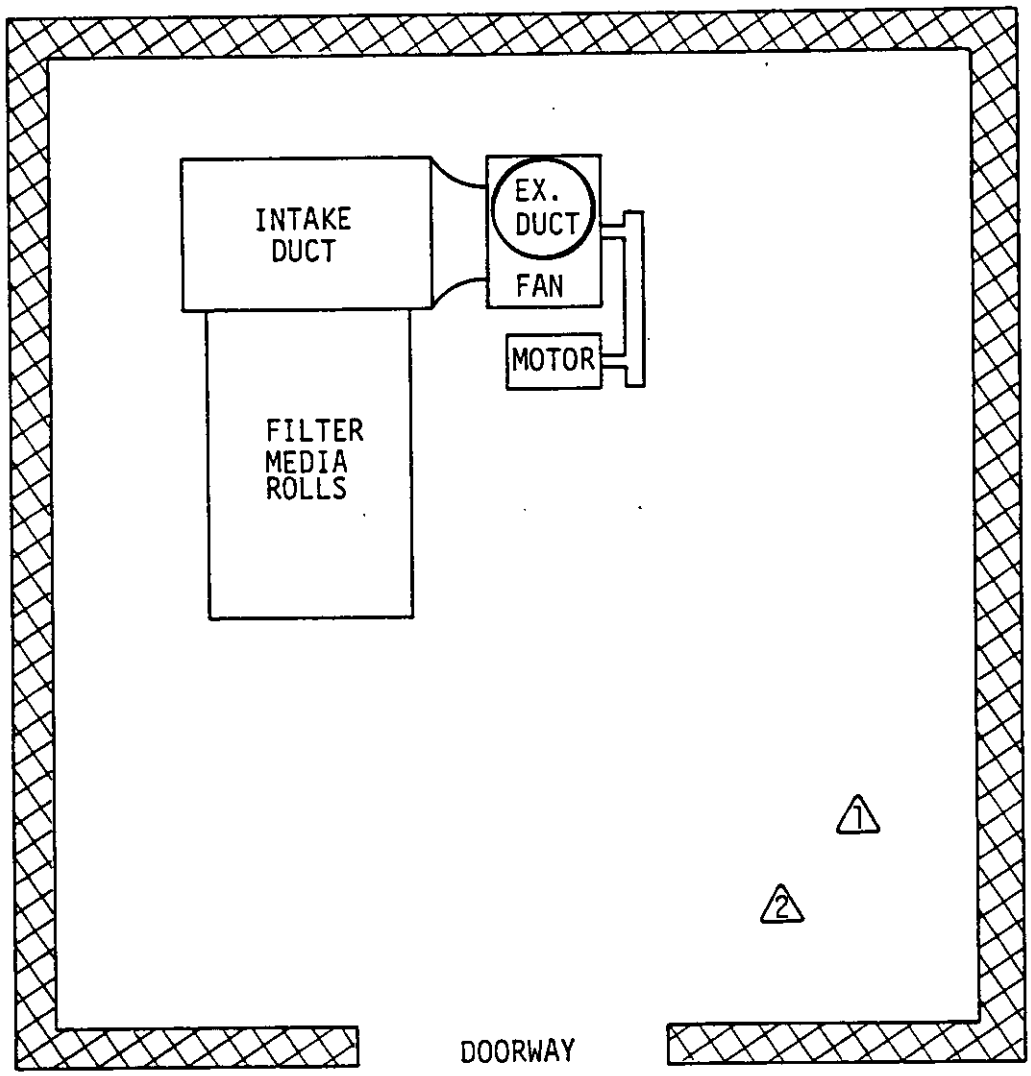

1 Observer #1
2 Observer #2

POSITIONS FOR OBSERVATION OF SATURATOR HOODS

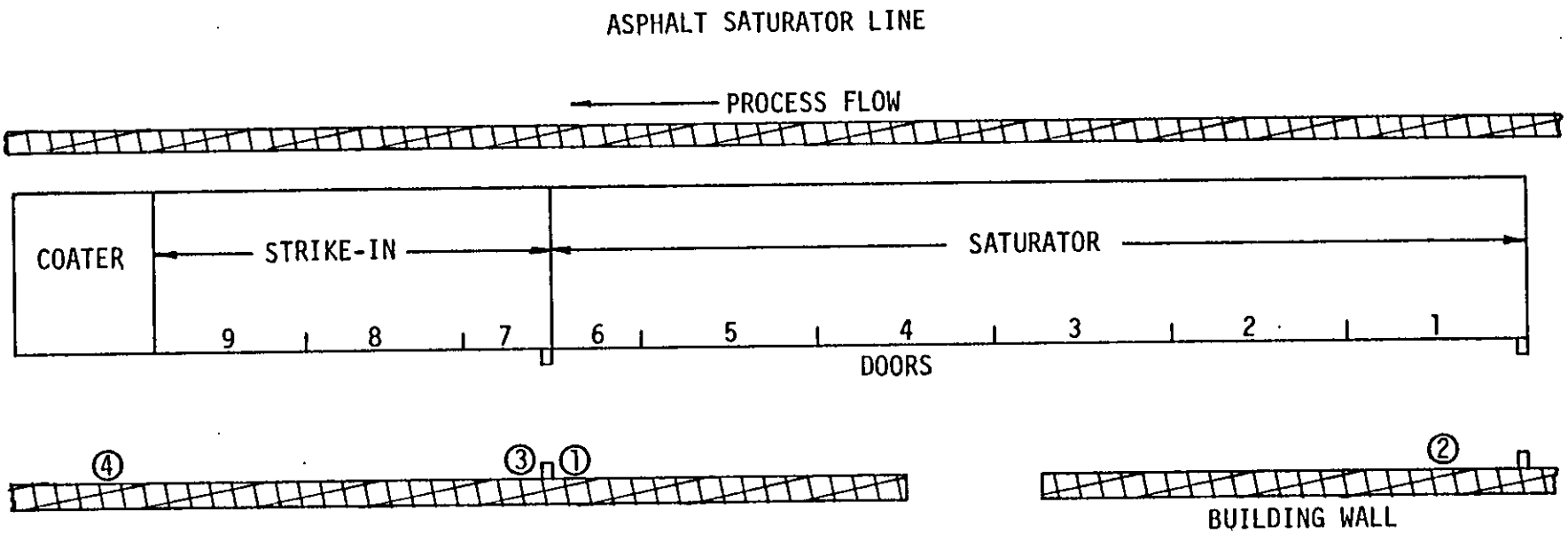

1. Observer 2, 0900-1010; Observer 1, 1025-1304
2. Observer 1, 0900-1010; Observer 2, 1033-1304
3. Observer 1, 1336-1712
4. Observer 2, 1335-1720

FIGURE IV-7

SECTION V

SAMPLING AND ANALYTICAL PROCEDURES

Total hydrocarbon (THC) and SO_2 measurements were performed at the test site with continuous monitoring instruments. Descriptions of these methods are provided in detail below.

Quantitative analyses for polycyclic organic materials (POM) and for particulate matter collected from the flue gases were subsequently performed by Battelle-Columbus Laboratories under a separate contract with EPA. In general, the analytical procedures employed either were those prescribed by EPA Reference Methods for the specific emission or else were techniques previously used by Battelle and authorized by EPA.

PARTICULATES

Particulate sampling was conducted simultaneously at the inlet and outlet of the HEAF unit using similar sampling trains. The trains (Figure V-1) consisted of EPA Method 20 equipment, designed to accommodate concurrent total hydrocarbon monitoring. The sampling train used at the HEAF inlet included a cyclone prefilter between the probe and glass-fiber filter. Following the first inlet run (CEL-1-P) it was discovered that condensation droplets were passing through the cyclone and filter. The two subsequent tests conducted at the inlet (CEL-3-P and CEL-7-P) were performed with a glass wool plug inserted into the cyclone inlet. Inclusion of the glass wool plug was necessary to eliminate mist carryover through the filter. No cyclone prefilter was necessary for the train used to sample the HEAF outlet because no problems were encountered with condensation accumulation before the filter. Preweighed glass-fiber filters were used for all inlet and outlet runs.

The Method 20 sampling train included a tee at the exit of the filter that allowed simultaneous THC sampling. A dial thermometer was inserted through a fourth opening in this tee into the back half of the filter holder for monitoring of gas temperature at this point. The prefilter and filter were heated to $100^{o}F \pm 10^{o}F$ in order to control sampling conditions

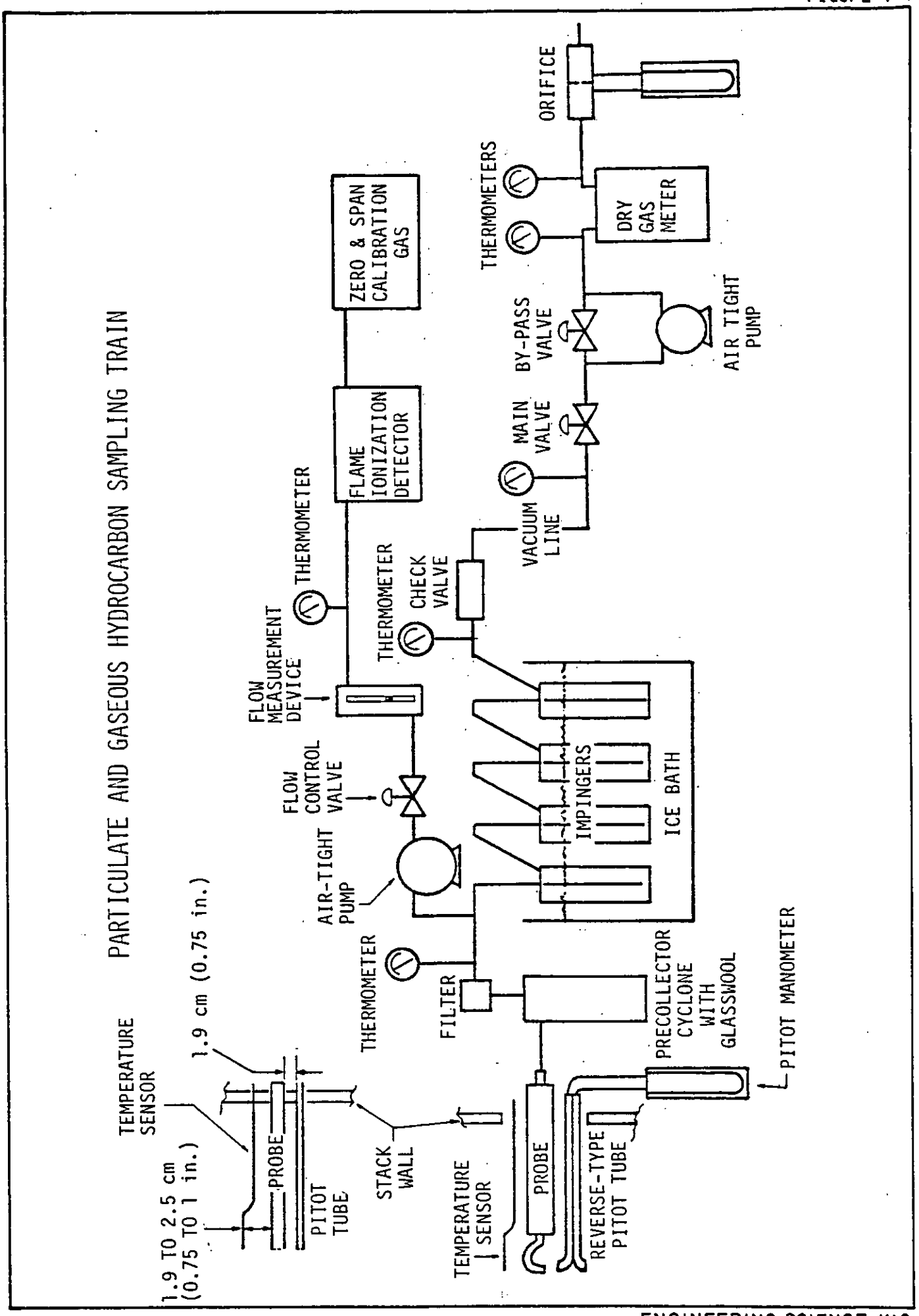

ENGINEERING-SCIENCE, INC.

pertaining to water and/or hydrocarbon condensation in the front half of the sampling train. This change in the filtration temperature normally employed for Method 5 sampling was selected to provide a consistent basis for evaluating different control systems used in the asphalt roofing industry. Selection of the 100°F filtration temperature had been previously found to be consistent with the optimum operating temperature of the collection systems to be evaluated.

Another modification to EPA Method 5 sampling procedures involved extraction of a small portion (1 lpm) of the sample gas after filtration and use of a continuous flame ionization detector (FID) analyzer to measure total gaseous hydrocarbon content. The use of this sampling procedure in EPA Method 20 is described further in the succeeding sub-section.

Pretest preparation and all sampling procedures described in EPA Method 20 were used. A complete description of EPA Method 20 is located in Section I of Appendix F. This method was developed from information obtained from R&D testing which was performed prior to the SPNSS testing in the asphalt roofing industry. To obtain maximum test data, the specific sampling and analytical procedures used at a single SPNSS test often exceeded those specified in the reference method. For example, on this test during sample cleanup and recovery, additional sample aliquots were recovered beyond the required number as was requested by the EPA Project Officer.

Sampling was conducted isokinetically. A single run consisted of forty-eight traverse points which were sampled for three minutes each. Six particulate runs were conducted (three each at the inlet and outlet of the HEAF unit). Odd test numbers correspond to inlet runs and even numbers to outlet runs.

SAMPLE NUMBER	DATE	LOCATION
CEL-1-P	10-21-75	HEAF inlet
CEL-2-P	10-21-75	HEAF outlet
CEL-3-P	10-22-75	HEAF inlet
CEL-4-P	10-22-75	HEAF outlet
CEL-7-P	10-24-75	HEAF inlet
CEL-8-P	10-24-75	HEAF outlet

An air-conditioned conference room was provided by the plant for sample recovery and clean-up. The room was located approximately 1/4 mile from the test site. Following sampling and post-test leak check, the sampling trains were disassembled, all parts sealed, and then transported by automobile to the clean-up area.

EPA Method 20 requires that the acetone wash of the probe and glassware be preceded by a 1,1,1-Trichloroethane (TCE) wash. Thus, samples were recovered as follows:

Container 1	TCE wash-front half (except prefilter)
Container 2	Acetone wash-front half (except prefilter)
Container 3	Cyclone prefilter with glass wool plug-not recovered-sealed in field
Container 4	Filter (glass-fiber)
Container 5	H_2O from 1st and 2nd impingers
Container 6	TCE wash-back half
Container 7	Acetone wash-back half

As mentioned previously, CEL-1-P test did not include the glass wool plug in the cyclone. Therefore, for this run the cyclone washes were combined with the front half TCE and acetone washes. No prefilter was used with the outlet sampling runs.

After the sampling train wash, the equipment was reassembled, charged with the specified Method 20 contents, and sealed prior to the next test. Portions of each stock bottle of TCE and acetone used for sample recovery and/or clean-up were transferred via clean-up wash bottles to clean sample bottles for blank determinations. Similar blank samples were taken of the distilled-deionized water used in the impingers.

All samples were shipped to Battelle for gravimetric determination of particulate mass by Method 20 analysis. Results of those determinations were transmitted to ES from Battelle via EPA. Analytical procedures used are presented in Section I of Appendix F. The back-half catch was not analyzed.

The means for determining the volume of gas withdrawn for the THC monitors is described in Section I of Appendix A, along with example calculations and results for each run.

TOTAL HYDROCARBONS (THC)

Total hydrocarbon concentrations were monitored concurrently with all particulate test runs, and an additional THC test was conducted after completion of all particulate testing. A diagram of the sampling train is presented in Figure V-I.

The THC Method 20 samples were collected by withdrawing a portion of the gas stream immediately after it passed through the temperature controlled glass fiber filter. Samples were drawn from the tee, through a moisture knockout trap, and then through (60 foot inlet and 30 foot outlet) heated (150°F) Teflon[1] lines. Each sample then passed through a stainless steel bellows pump and to a four-way gas manifold ([1]sample, [2]zero gas, [3]span gas [4]THC analyzer inlet).

From this point the inlet and outlet THC sampling systems varied slightly. The inlet gases passed from the manifold into a rotameter, allowing direct measurement of the flow rate of gases withdrawn from the particulate train. From the rotameter the inlet gases entered a Beckman 108A[1] THC analyzer at a constant rate. Thence, a portion passed through the flame ionization detector and the excess was exhausted to the atmosphere.

The outlet sampling system transmitted the gas sample directly from the four-way manifold into a Scott Model 116[1] analyzer. Gas flow through the Scott analyzer is similar to that of the Beckman analyzer. A constant gas flow to the detector is computed from the pressure of the detector gas stream sample. The exhausted excess sample flow rate is monitored by a rotameter. Total gas flow to the Scott analyzer is calculated by adding the detector flow to the sample bypass flow.

Both the Beckman and Scott THC analyzers operate on the flame ionization detection principal. Each was equipped with an Esterline Angus[1] strip chart recorder that provided a continuous record of the THC measurements.

---

[1]Mention of a specific company or product does not constitute endorsement by the EPA.

The Beckman 108A used for monitoring the HEAF inlet THC was operated in the following ranges: 0-100 ppmv, 0-200 ppmv, or 0-500 ppmv. Instrument specifications are ±1 percent for reproducibility and 5 seconds for response time.

The Scott analyzer used for the HEAF outlet monitoring was operated in the following ranges: 0-100 ppmv, 0-200 ppmv, or 0-500 ppmv. The reproducibility specification of that instrument is rated at ±1 percent, and response time is specified at 1 second for 90 percent of final reading.

Calibration of both instruments was conducted with gases of certified concentrations of 0 and 84 ppmv of methane in air. Both instruments were calibrated via a manifold from the same gas cylinders. Calibration gases were prepared and analyzed by Airco[1]. Certificates of those analyses are provided in Appendix E, Section I.

Reduced portions of the recorder strip chart displaying instrument response during sample monitoring are presented in Figures V-2 through V-8. Zero baseline was adjusted to 10 percent of chart before each test and checked for drift. This was readjusted if necessary during the time of port changes. Corrections for zero baseline and drift were made when computing THC concentrations. The concentration of total hydrocarbons can be estimated from Figures V-2 through V-8 by the following equations:

(1) for 10 mv range: ppm THC = % sample - % zero baseline

(2) for 20 mv range: ppm THC = (2)(% sample - % zero baseline)

(3) for 50 mv range: ppm THC = (5)(% sample - % zero baseline)

Minimum, maximum and average THC concentrations were calculated for each 3 minute traverse point. The starting time for each 3-minute period and the corresponding traverse point are marked on the recorder strip charts. Field data for the special THC run (CEL-9-THC) were recorded at varying time intervals from 5 to 25 minutes. The data for those THC emission rates were interpolated at 3 minute intervals. Average THC concentrations for each test run were also computed. Three minute average

---

[1] Mention of a specific company or product does not constitute endorsement by the EPA.

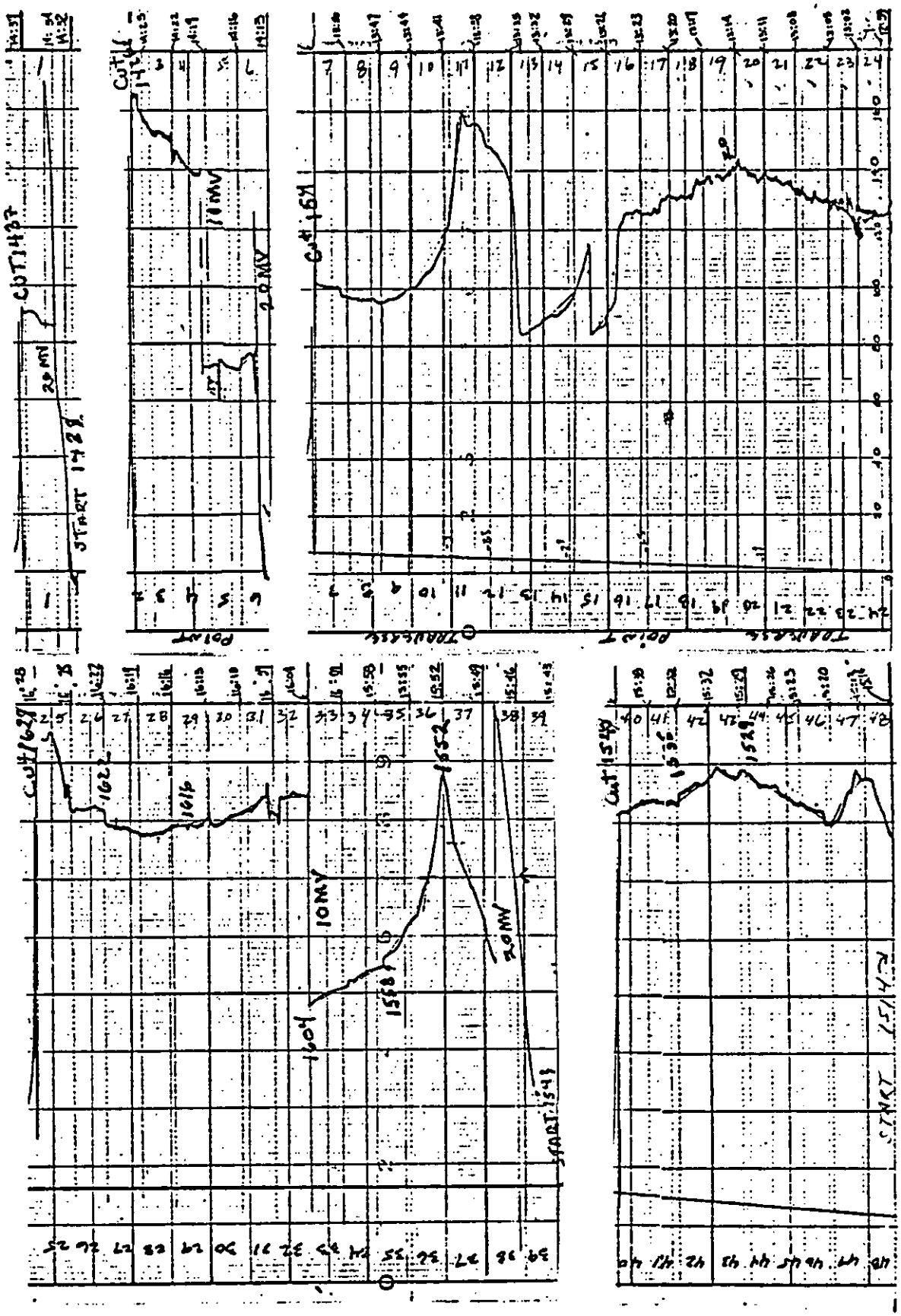

FIGURE V-2 - RUN CEL-1-THC HEAF INLET

October 21, 1975

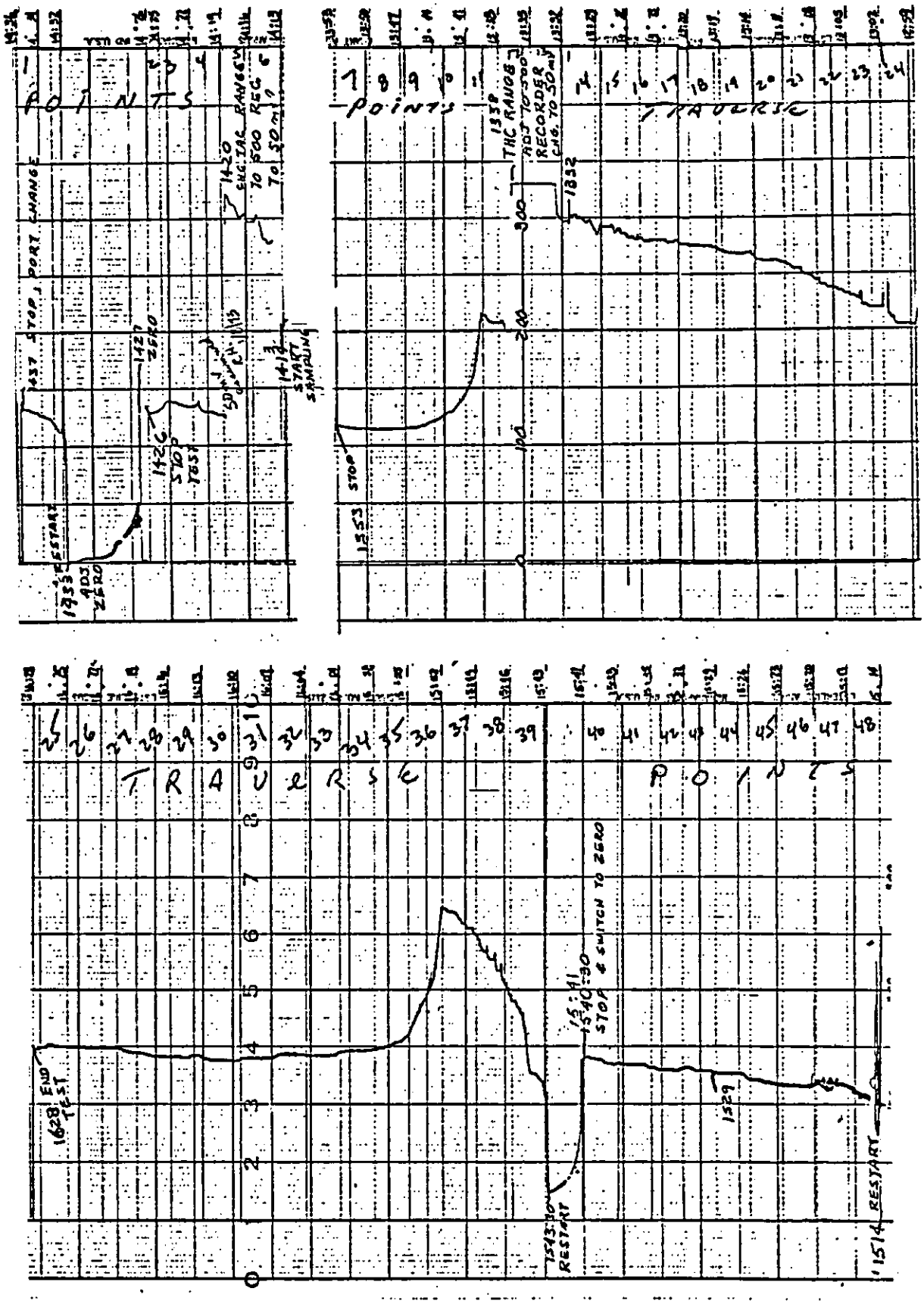

FIGURE V-3 - RUN CEL-2-THC HEAF OUTLET

October 21, 1975

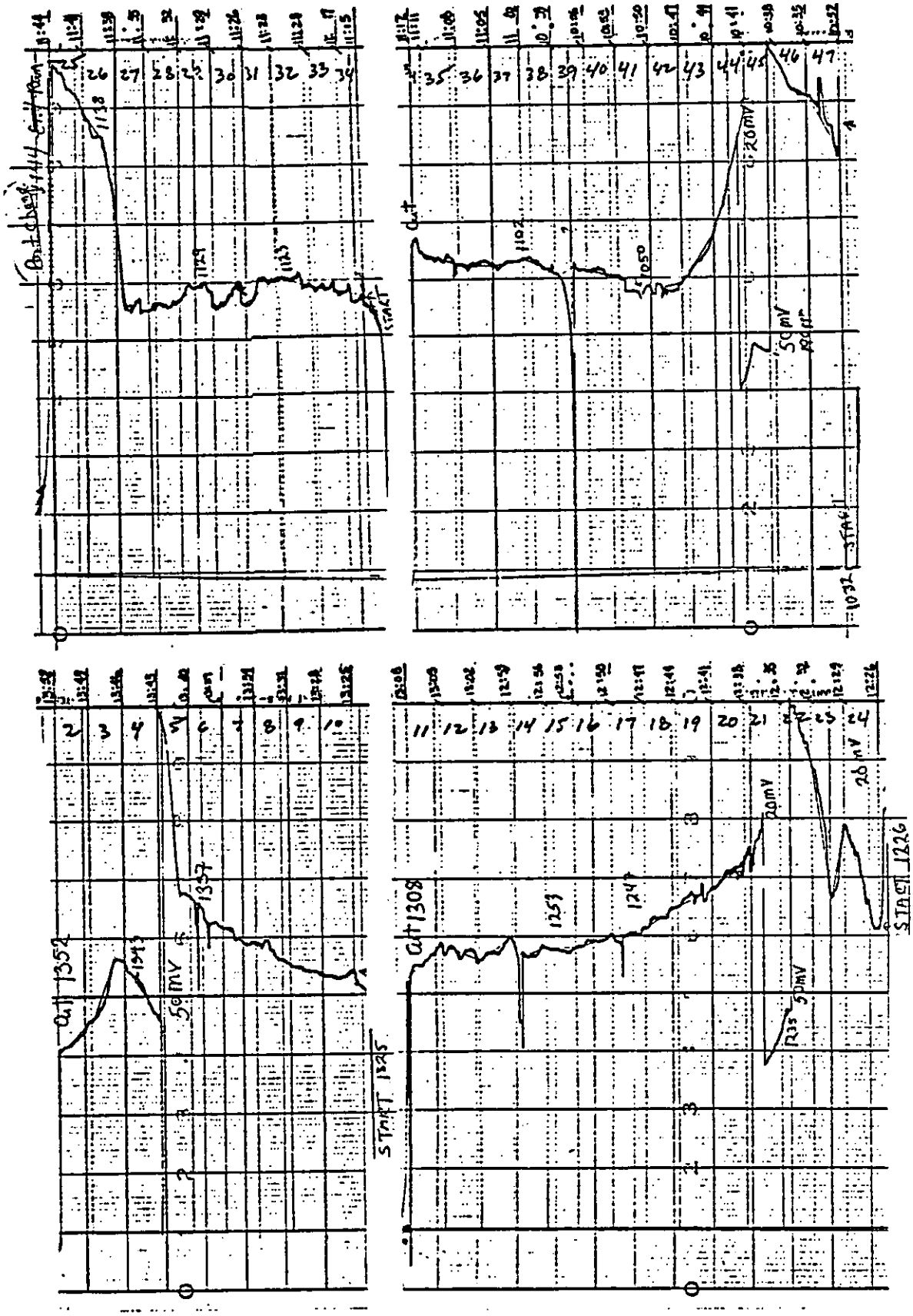

FIGURE V-4 - RUN CEL-3-THC HEAF INLET

October 22, 1975

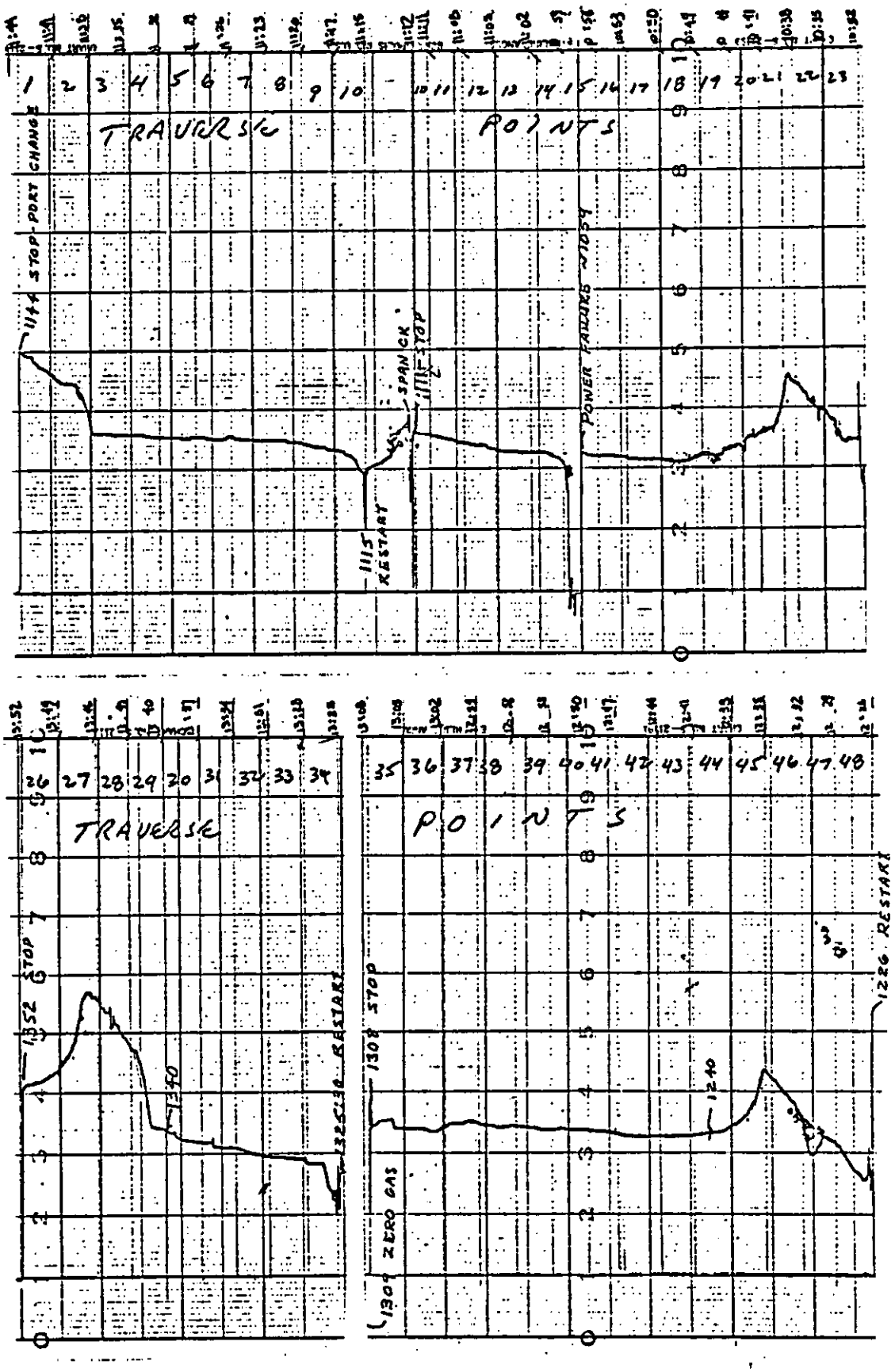

FIGURE V-5 - RUN CEL-4-THC HEAF OUTLET

October 22, 1975

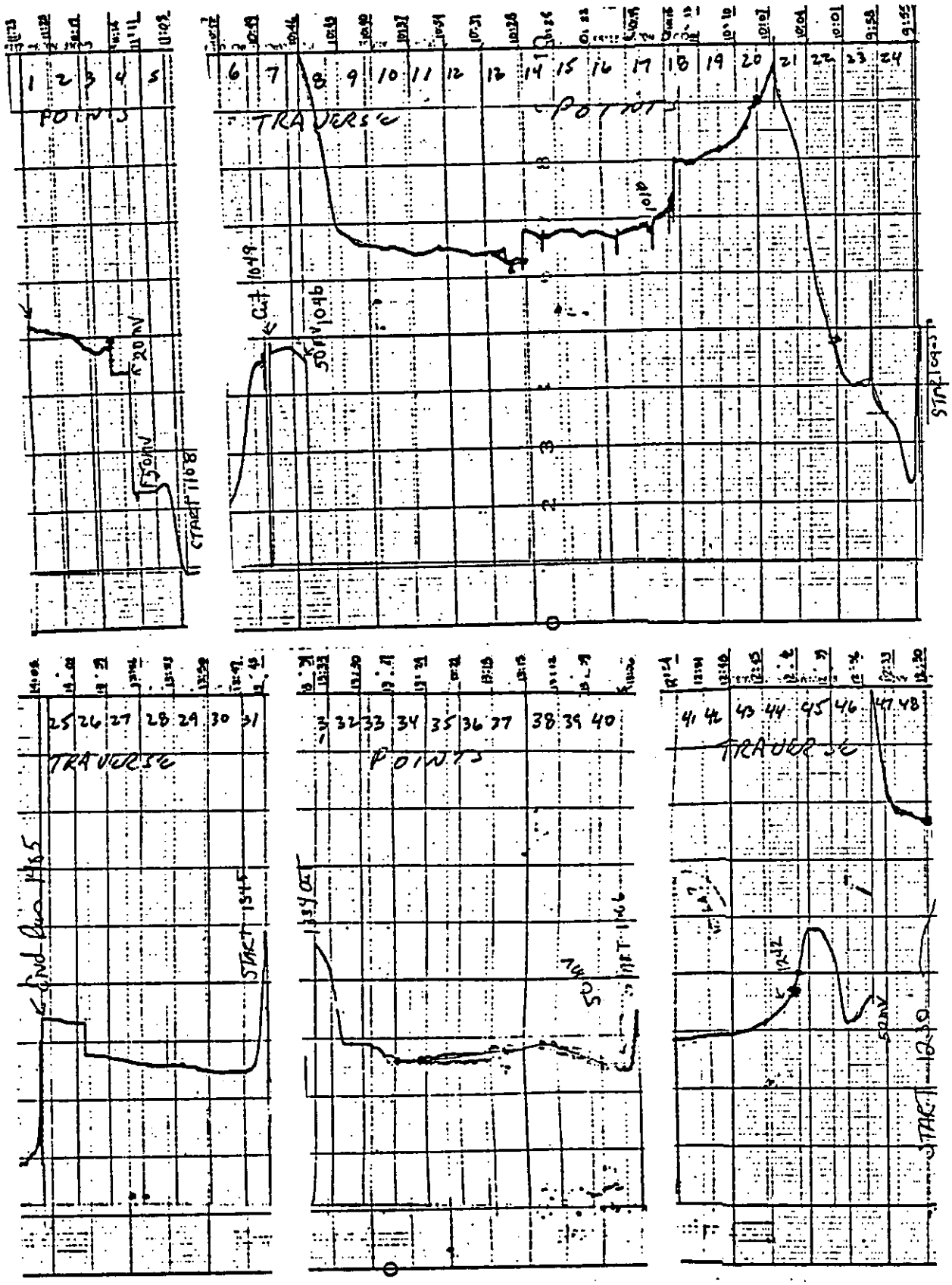

FIGURE V-6 - RUN CEL-7-THC HEAF INLET

October 24, 1975

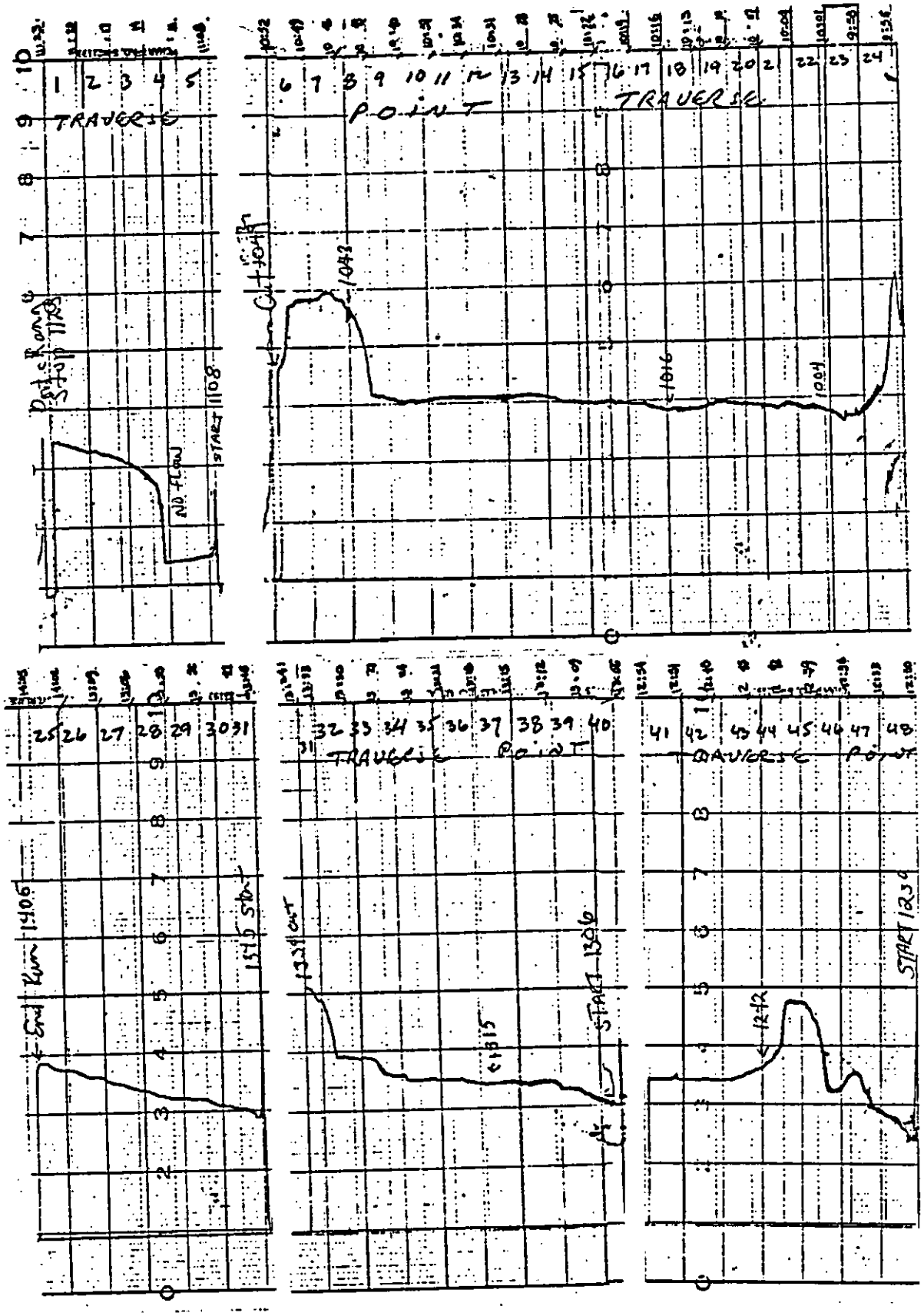

FIGURE V-7 - RUN CEL-8-THC HEAF OUTLET

October 24, 1975

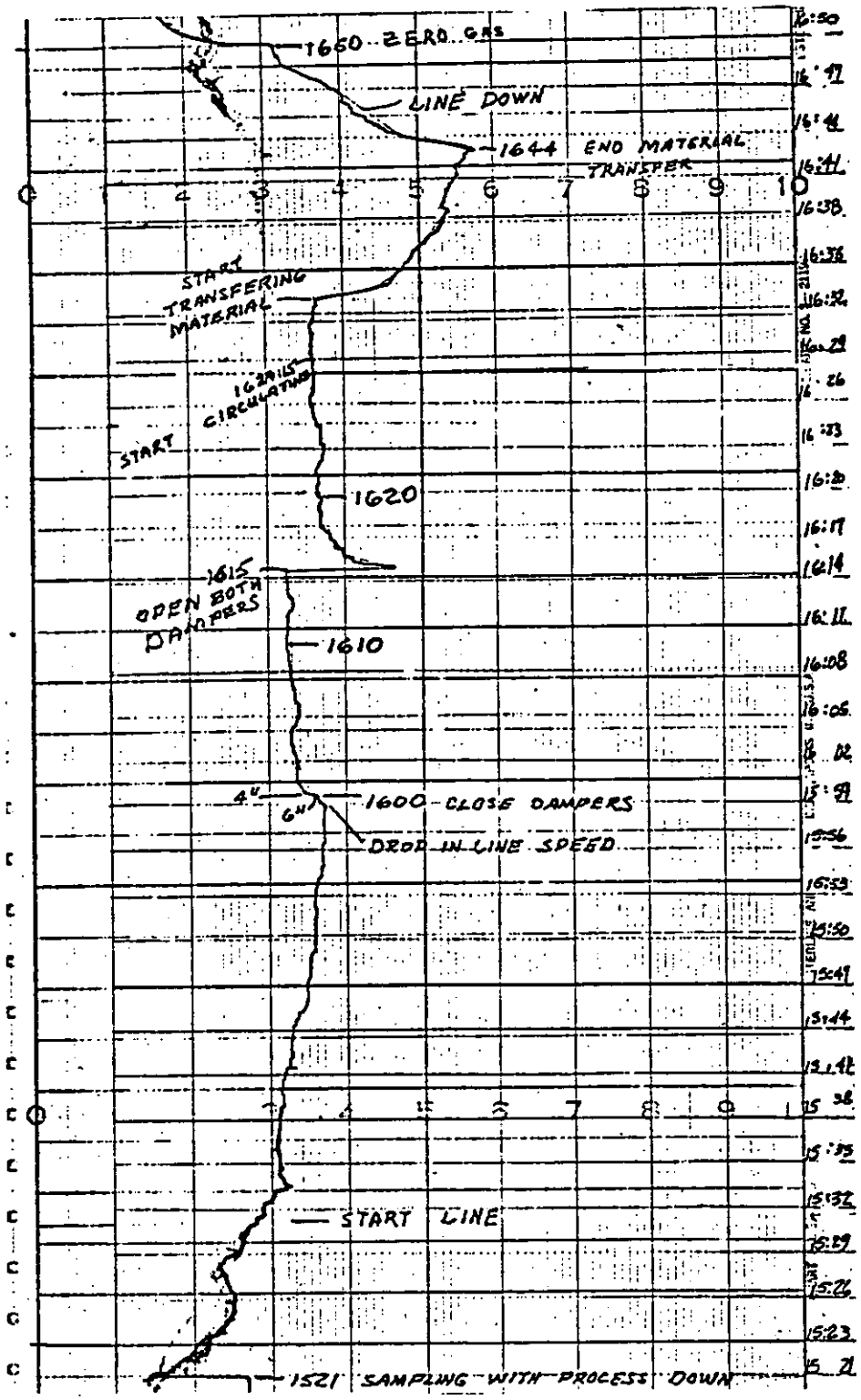

FIGURE V-8 - RUN CEL-9-THC SPECIAL RUN HEAF INLET

October 24, 1975

concentrations and the total average concentration were used with corresponding gas flow rates for each test. These data were used to calculate the emission rates in lbs/hr. as shown in Tables 10 through 16 of Section II.

Unabridged reproductions of the recorder strip charts, which include zero and span gas readings, are displayed in Section I of Appendix C.

POLYCYCLIC ORGANIC MATTER (POM)

The POM sampling train (Figure V-9) was modified Method 5 equipment with an adsorbent column inserted between the heated (125°F) glass fiber filter and the first water-filled impinger. The adsorbent column (Figure V-10) consisted of a glass cooling coil (120 cm x 0.8 cm) and a cylindrical column (7 cm x 3 cm diameter) packed with Tenax.[1] This Tenax column was maintained between 125 to 130°F with a thermostatically controlled, recirculating water bath. For POM testing the gas flow through the sampling train was:

STACK GAS
↓
PROBE
↓
CYCLONE
with glass wool plug
(plug not used on outlet)
↓
FILTER
(Heated) 125°F
↓
ADSORBENT (POM)
(Heated) 125°-130°F
↓
REMAINING METHOD 5 TRAIN
(i.e., impingers, pump and gas meter)

In order to minimize photooxidation of POM compounds during sample collection, all exposed glassware up to and including the adsorbent column was wrapped with aluminum foil to prevent exposure to ultra-violet radiation.

POM samples were collected at the HEAF inlet and outlet simultaneously. Sampling was performed isokinetically throughout the runs in accordance with modified Method 5 specifications. Excessive pressure drop, resulting

[1] Mention of a specific company or product does not constitute endorsement by the EPA.

FIGURE V-9

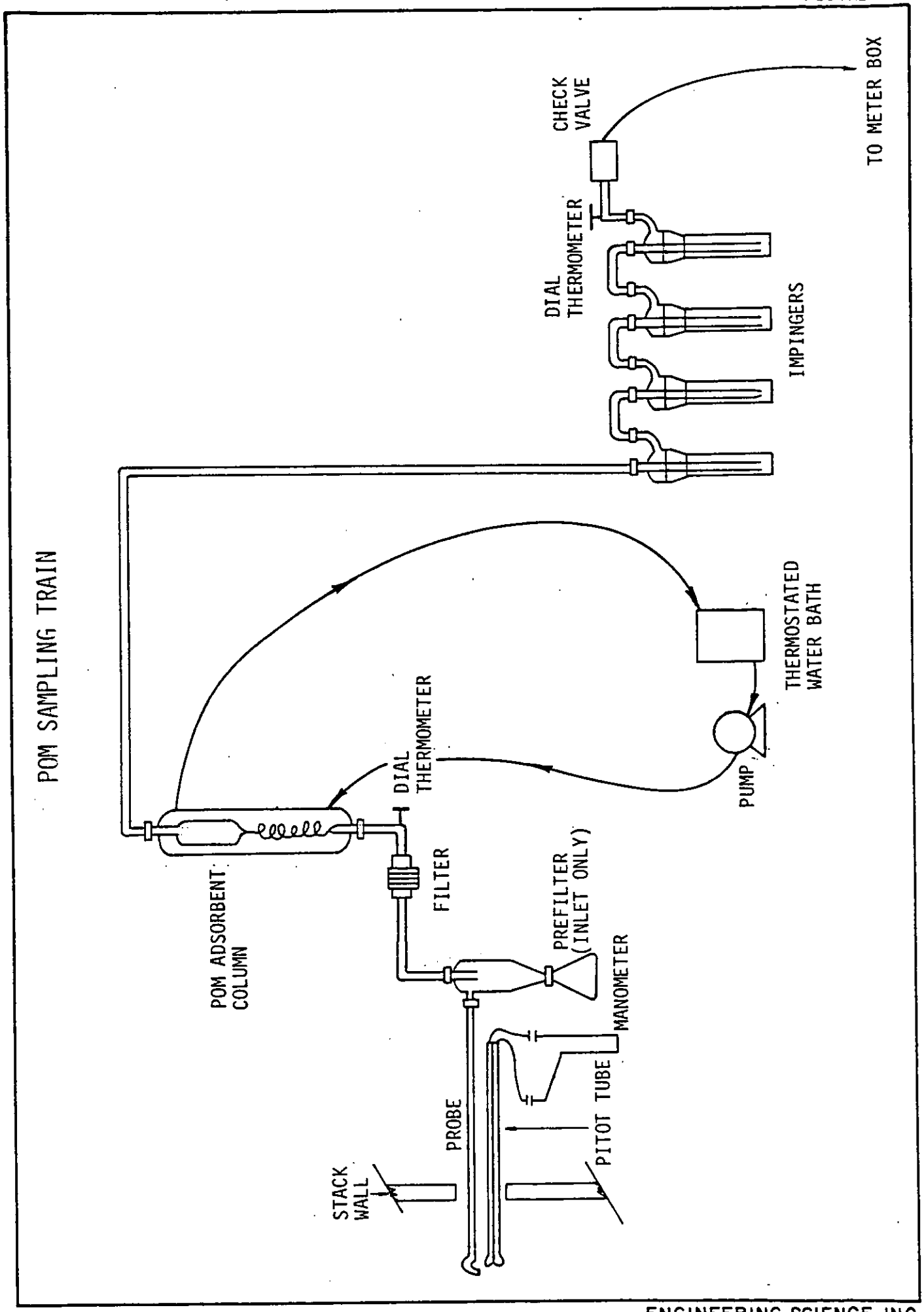
POM SAMPLING TRAIN
TO METER BOX
CHECK VALVE
DIAL THERMOMETER
IMPINGERS
THERMOSTATED WATER BATH
PUMP
DIAL THERMOMETER
POM ADSORBENT COLUMN
FILTER
PREFILTER (INLET ONLY)
MANOMETER
PITOT TUBE
PROBE
STACK WALL

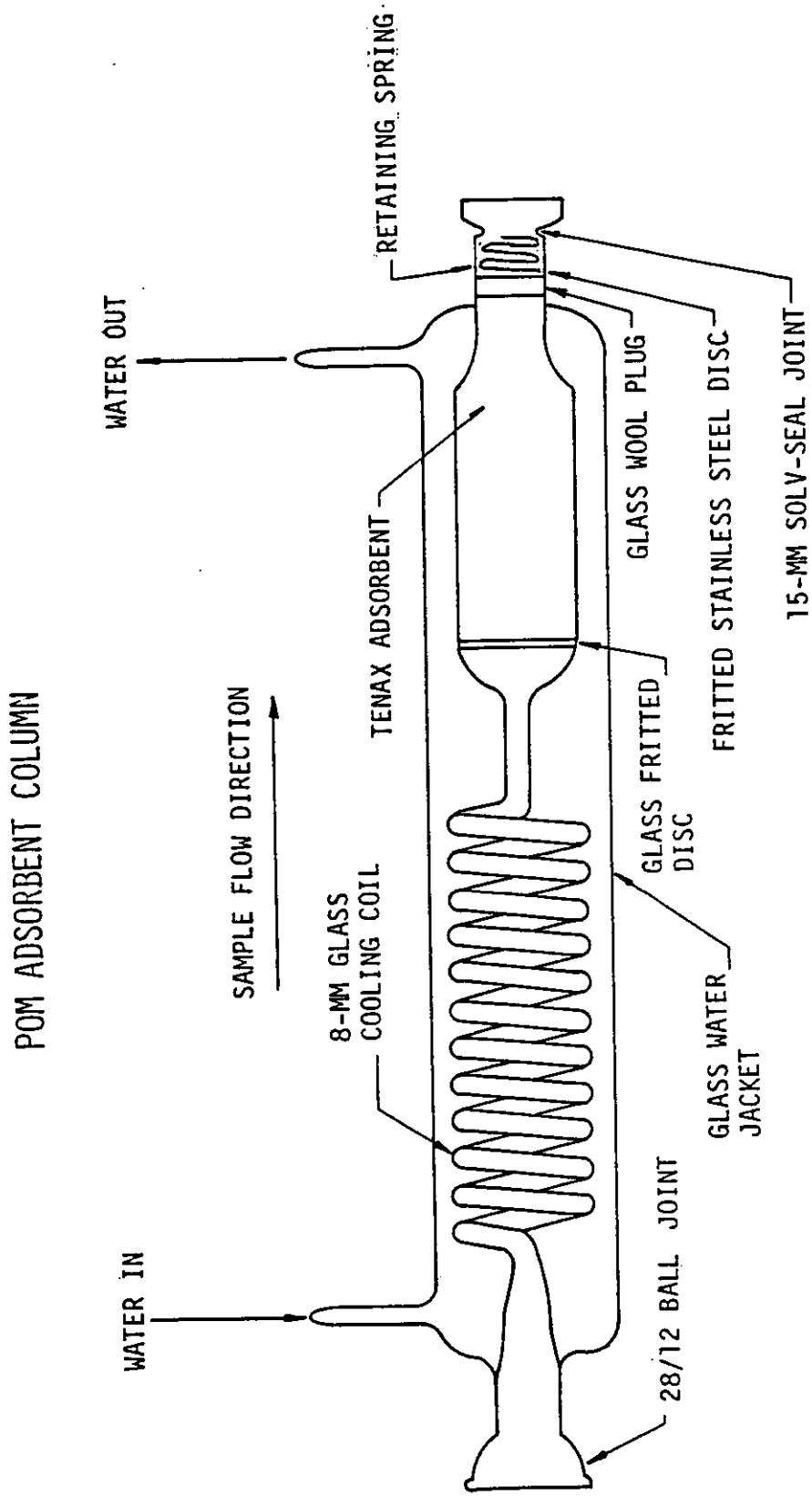
POM ADSORBENT COLUMN
SAMPLE FLOW DIRECTION
WATER IN
WATER OUT
8-MM GLASS COOLING COIL
TENAX ADSORBENT
RETAINING SPRING
28/12 BALL JOINT
GLASS WATER JACKET
GLASS FRITTED DISC
FRITTED STAINLESS STEEL DISC
GLASS WOOL PLUG
15-MM SOLV-SEAL JOINT

from the flow of gases through the adsorbent material, necessitated changing a probe tip for the inlet train. That change was made after the first 3-minute traverse point of the run. Correction for this change was made when calculating the isokinetic sampling rate by determining an average probe nozzle area weighted upon a volume sampled basis.

Immediately following sample collection the adsorbent column, filter holder, and prefilter (inlet only) were sealed and stored in an opaque container. The probe and connecting glassware were capped and transported to the clean-up area previously described. Incandescent lighting was used during the POM sample recovery in order to minimize photooxidation of those samples. Washing consisted of an initial 1,1,1-Trichloroethane (TCE) wash followed by an acetone rinse. TCE and acetone washes were collected in sealed amber bottles and stored in the dark in order to minimize POM degradation. Samples of the solvents and adsorbent column were retained for blank analysis.

The TCE/acetone probe washes, the filters, and the adsorbent columns were then transported to Battelle where the organic contents of the three separate portions of each sampling train were extracted to recover the sample.

The three extracts from the probe, filter and adsorbent column were combined and a single POM analysis was performed on each total sample. First, the overall volume of the combined extract was reduced by evaporation, and then the POM fraction of the extract was isolated by liquid chromatography separation.

The POM portion of the sample obtained was then separated into various compounds by gas chromatographic separation using a Dexil 300[1] temperature programmed column. The benzpyrene isomers were separated on an isothermal column of N' - Bix(p-methoxy-benzylidene)-α,α'-bi-p-toluidine.

Once the POM compounds were separated, detection of the constituents was conducted with a Finnigan 1015[1] quadrupole mass spectrometer using a chemical ionization source. Data acquisition and subsequent quantification were performed by a Systems Industries 150[1] data acqusition system system coupled to a Digital PDP8[1] computer respectively.

---

[1] Mention of a specific company or product does not constitute endorsement by the EPA.

Results of the POM analyses were transmitted to ES by EPA and are presented in Appendix D, Section II. A more detailed description of the POM sampling and analytical procedures is contained in Section II of Appendix F.

OUTLET GAS COMPOSITION

The HEAF outlet gases were analyzed by two procedures to determine the composition. During each particulate test a sample of outlet gas was collected in a plastic bag and subjected to a field Orsat analysis. The second analytical procedure involved collection of outlet gas samples in evacuated glass flasks followed by GC and MS analysis in the laboratory.

The Orsat sample collection train consisted of a stainless steel probe, flexible connecting tubing, water knock-out trap, glass fiber filter, diaphragm pump, and an aluminized Mylar[1] bag. An integrated sample was obtained using EPA Method 3 procedures. The samples were analyzed with an ORSAT analyzer within a matter of minutes after completion of the sample collection.

The evacuated flasks were provided preevacuated by Battelle. They were 2 liter, round-bottom, glass flasks with a stopcock attached to the flask neck. The flasks were filled through a glass tubing tee installed in the FID sampling system between the knock-out trap and the heated sample line. Thus the gas samples collected in the flasks were the same as the gas analyzed by the FID hydrocarbon analyzer. A total of five flask samples were obtained between 10:00 a.m. and 10:15 a.m. on October 24, during Run No. 8 The flasks were filled one at a time. A one-inch length of surgical rubber tubing was used to connect the flask inlet to the glass tee. A pinch clamp on the rubber tubing was used to close off the tee during periods when flask samples were not being taken. During filling the flask stopcock was opened only part way so that the flask filled slowly. This minimized any potential interference to the particulate and FID systems.

After collection, the flasks were returned to Battelle for analyses.

---

(1) Mention of a specific company or product does not constitute endorsement by the EPA.

The sample was analyzed on an as-received basis using MS and GC instruments. The gas mass spectra was run from mass 2 through mass 100. The light hydrocarbons are analyzed by the GC using a flame ionization detector (FID) and Porpak Q[1] column. A second GC analysis using a molecular sieve column and a thermal conductivity detector was made to detect carbon monoxide content (N_2 and CO both have nominal mass of 28 on the MS and the GC provide a specific CO content which can be subtracted from the total N_2 plus CO value obtained from the MS.)

After the analysis on the as-received sample, the samples were concentrated by cooling to liquid nitrogen temperature and pumping off the non-condensable gases (CO, N_2, Ar, O_2, CH_4 and H_2) the condensable material was warmed to room temperature and analyzed using the MS. The GC was used with the MS to determine the concentration of components with the same mass value.

---

[1] Mention of a specific company or product does not constitute endorsement by the EPA.

SULPHUR DIOXIDE (SO_2)

SO_2 monitoring was conducted at the HEAF outlet on October 24, 1975, concurrent with particulate run CEL-8-P. The sampling system employed a 1/4-inch O.D. stainless steel probe. A stainless steel bellows pump was used to transfer the sample through a 20 foot unheated Teflon[1] line, through a moisture trap, and into a Dynasciences Model SS-330[1] SO_2 analyzer. A sample rate of 0.5 to 2.0 SCFM was used throughout the test.

The Dynasciences Model SS-330 SO_2 monitor is rated with a linear response of $\pm$ 1 percent of full scale and operates on an electrometric principle. This instrument was operated in the 0-10 (L-scale) and 0-25 (M-scale) ppm SO_2 ranges during the test.

Calibration of the SO_2 monitor was conducted with certified gas mixtures containing 0 and 7.6 ppm SO_2. Airco[1] certificates of analysis are presented in Appendix E, Section I. Excessive electronic noise was experienced during the tests, but response and reproducibility were consistent as verified by calibrations.

Portions of the recorder strip chart displaying SO_2 sampling measurements are reproduced in Figure V-11. Field data were averaged over 10-minute intervals, which are identified on the strip chart. Concentrations of SO_2 were calculated from the recorder strip chart data by subtracting the extrapolated zero baseline (ranging from 9 to 20 percent of scale) from the average 10-minute recorder percent of scale and then multiplying that difference by a response factor (ppm/%). The response factor is determined from span gas analysis. The equation used is:

$$\text{ppm } SO_2 = (\%\text{ sample} - \%\text{ zero baseline}) \times \text{Response factor}$$

Minimum, maximum and average SO_2 concentrations for each 10-minute period have been previously presented in Section II, Summary and Discussion of Results.

VISIBLE EMISSIONS

The evaluation of the visible emissions from the HEAF stack were conducted as prescribed by Method 9 test procedures without modification.

[1] Mention of a specific company or product does not constitute endorsement by the EPA.

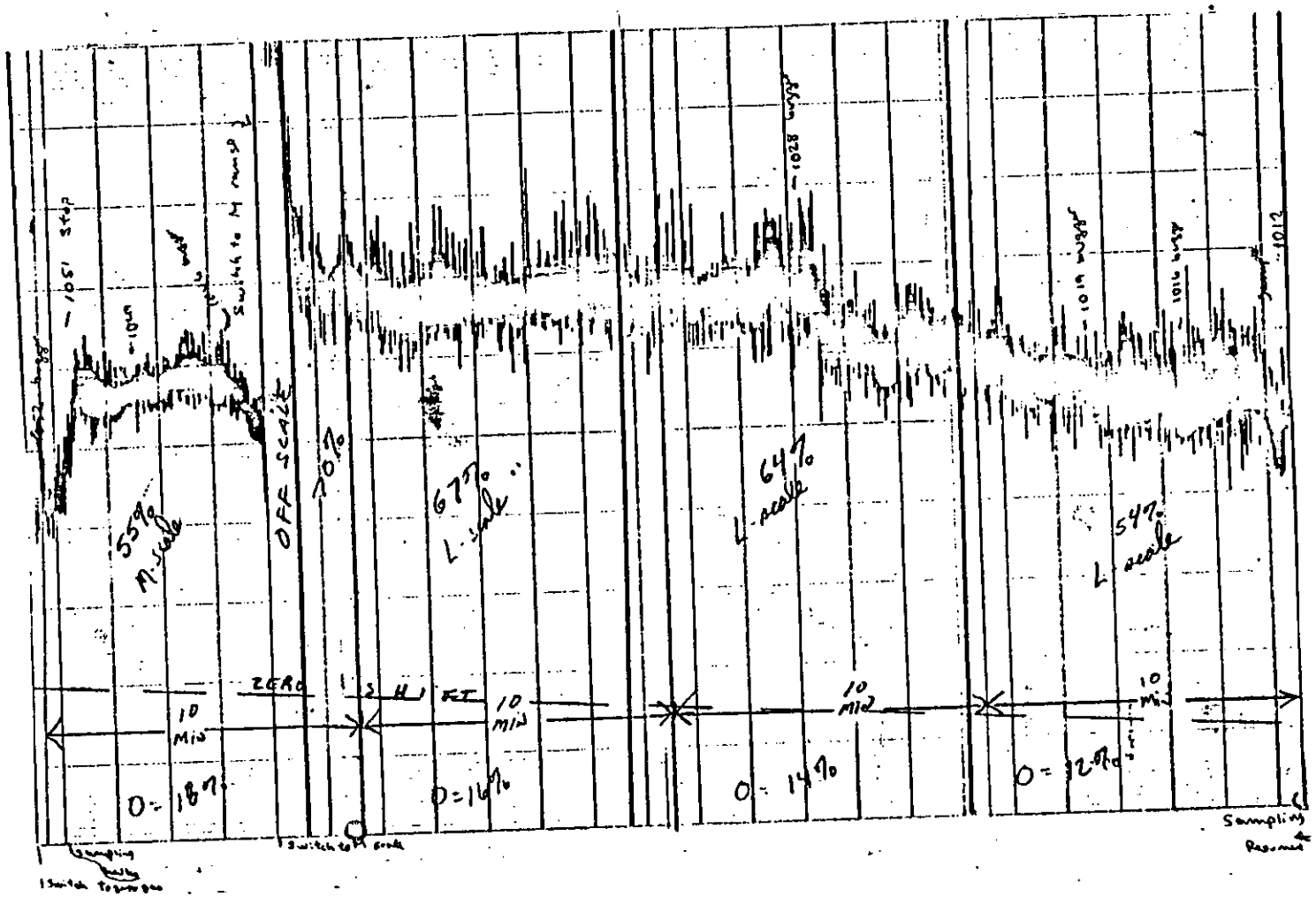

FIGURE V-11 - CEL-8-SO_2

October 24, 1975

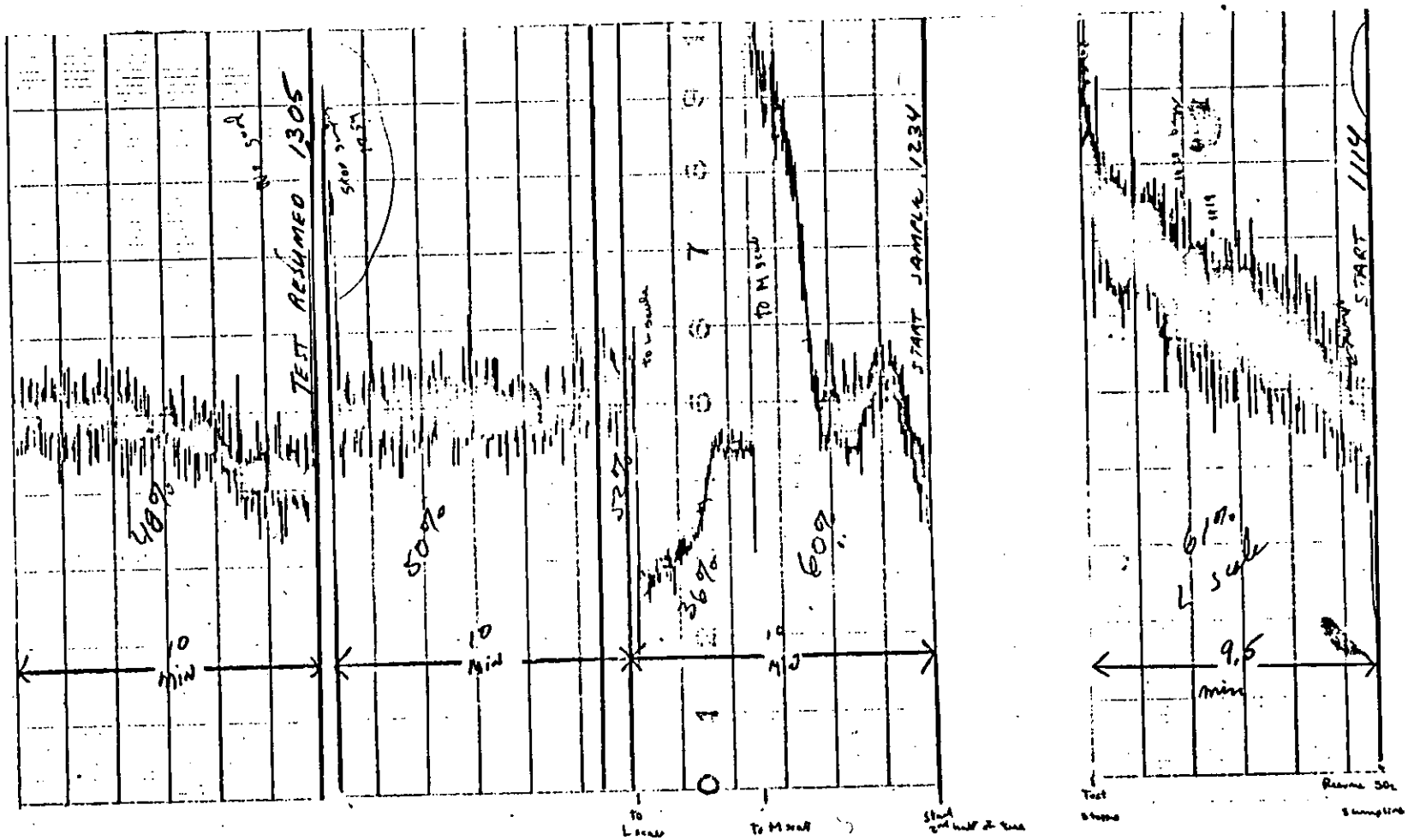

FIGURE V-11 (continued) - CEL-8-SO_2

October 24, 1975

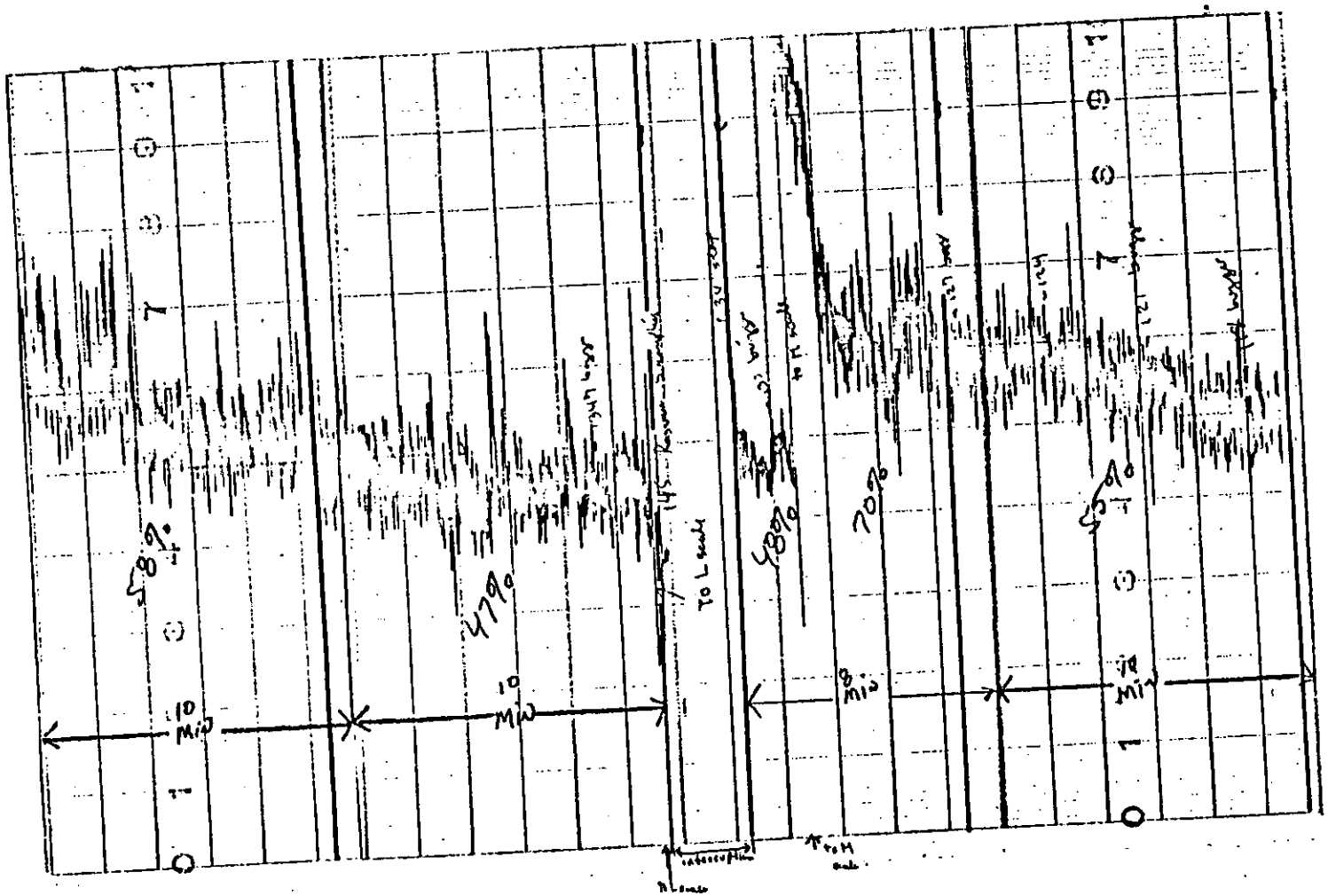

FIGURE V-11 (continued) - CEL-8-SO_2

October 24, 1975

Observations at less than optimal background and luminescence contrast conditions resulted in no detection of a plume.

Observations of the HEAF unit and of the saturator enclosure and coater did not conform to Method 9 inspection requirements for two major reasons. First, both of these stationary source emissions were completely fugitive in nature, i.e., there were no stack or duct exhausts for which a well defined point source plume existed. Secondly, both sources were located indoors precluding the presence of direct sunlight as the means of luminescence. In all cases the plant lighting was used during the observations. During evaluation of the saturator enclosure spraying/dipping section, the light source was supplemented by portable flood lights directed from the sidewall to the ceiling. In no instance were observations made by looking directly into any light source.

There is no prescribed method for selection of observer locations when evaluating fugitive visible emissions indoors. The observation sites as illustrated in Section IV were dictated by the EPA Project Officer at the time of the test program.

Section 4 Ref. 3

THIS TEST WAS ALREADY USED IN THE EXISTING AP-42 SECTION

DRAFT/WP
d3006-4/971130
03/30/92 1

NSPS PLANT C

Emission Test Report Review Checklist

Reviewer: Brian Shroger
Review Date: 7/14/92

A. Background Information

1. Facility name: CELOTEX CORPORATION ASPHALT ROOFING PLANT

   Location: Los Angeles, California

2. Source category: ASPHALT ROOFING

3. Test date: October 21-24, 1975

4. Test sponsor: EPA/EMB (75-ARM-8)

5. Testing contractor: Engineering Science, Inc.

6. Purpose of test: Development of Standards of performance for new stationary sources to regulate air pollutant emissions.

7. Pollutants measured

   PM PM-10 CO (ND) SO_2 (only 1 run) NO_x VOC Pb CO_2 (ND)

   Others (list): THC, (PS — VOID PS Data)
   Polycyc. Organic Matter - 1 run (experimental sampling train)

8. Process overview: On an attached page provide a block diagram of the unit operations and associated air pollution control systems at the facility. Identify process tested with letters from the beginning of the alphabet (A, B, C, etc.) and APC systems with letters from end of alphabet (V, W, X, etc.). Also identify test locations with Arabic numerals (1,2,3, ...). Using the ID symbols from that sketch complete the table below that identifies processes or unit operations tested.

Test ID	Process	Process ID	Emissions tested		APCD (controlled emissions only)
			Uncontrolled	Controlled	
1	Multiple Processes*	A	✓		
2	Multiple Processes*	A		✓	High Energy Air Filter (HEAF)

*Potential Air Contaminant Emission sources include the asphalt saturator, the strike-in section, the looper, the asphalt coater, and the asphalt storage tanks. Shingle-Making Processes.

B. Process Information

1. Provide a brief narrative description of the process. With as much detail as possible, (e.g., if a furnace or conveyor system is used, identify the type of unit) describe the equipment used for those operations tested. (Note: If process description provided in test report is adequate, attach copy or reproduce here.)

SECTION III

PROCESS DESCRIPTION AND OPERATIONS

The asphalt roofing manufacturing plant has two manufacturing lines, one for saturated felt and another for producing shingles and rolls. The line producing shingles/rolls is designated as Line 1 and the other as Line 2. Emission tests were conducted only on Line 1, and hence, this discussion is limited to that line.

PROCESS DESCRIPTION

The first step in the shingle manufacturing process is saturation of felt with asphalt. At this Celotex plant, the saturating operation is carried out by spraying the felt on one side with hot asphalt and then dipping the felt in hot asphalt at about 450°F. Hot asphalt is sprayed onto only one side so that moisture present in the felt can easily escape and prevent subsequent blistering of the shingles. After saturation, the felt passes through a "strike-in" drum section consisting of two rollers which squeeze in the surface asphalt and enhance asphalt permeation through the felt. The felt then goes through a hot looper section prior to being coated with coating asphalt. The coating asphalt differs from saturating asphalt in that it has a softening point range of about 210 to 220°F compared to 130 to 140°F for saturant. Another major difference is that coating asphalt has about 50 percent filler (rock dust) by weight. The addition of coating asphalt onto the felt gives the product (i.e., shingle) the strength to withstand the elements and serves as an adhesive bed for the granules. After the application of coating asphalt, granules are imbedded on one side of the felt and a backing agent (talc) on the other. The product is then cooled, cut, and packaged.

Emission sources that were monitored during the tests include the saturator, strike-in section, hot looper, and the coater. All of these sources were controlled by a HEAF (high energy air filtration) unit. The same unit also controlled emissions from the main asphalt storage tank and seven in-process storage tanks. A schematic of the sources controlled by the HEAF unit, including testing points, is shown in Figure III-1.

The saturator hood encloses the saturator, the strike-in section and the hot looper. The hood extends all the way to the floor and contains doors with 3 ft x 2 ft metal ports which can be opened for inspection. The coating area is enclosed with canvas from a height of about 6 ft above floor level. This acts as its hooding and is enveloped by the saturator enclosure. The HEAF unit controlling all of these sources including the storage tanks, as stated above, has a capacity of 22,000 acfm. There are two blowers (15 HP and 200 HP) which transport the fumes to the HEAF unit; the 15-HP blower precedes the HEAF and the 200-HP blower is after the HEAF unit. In addition, there are two other blowers one near the main asphalt storage tank and another at an "in-process" storage tank. Manufacturer's details on the HEAF blower are shown below:

Manufacturer: U.S. Electric Motors
Division of Emerson Electric
Milford, Connecticut

HP: 200
Type: R
Design B Code G
ID No. C 2941-00-173 83-02101
Motor RPM: 1,775
460V, 237 amps

There are several types of HEAF units. The Celotex (LA) plant has a Rotary Drum (DF) HEAF unit. It is a fully automatic system. Figure III-2 is an arrangement sketch of a typical Rotary Drum HEAF unit. The Celotex (LA) unit differed from this sketch in that the filter media entered and exited the cabinet from the opposite side. The Rotary Drum HEAF unit utilized a cylindrical perforated drum around which a stainless steel screen is wrapped. The stainless steel screen exits the filtration cabinet at the bottom of the cabinet, passes around an adjustable tension idler roll, and re-enters the filter cabinet on an upward slope at about mid-point in the front of the cabinet. Movement of the screen is provided by movement of the rotary drum which is driven by a small horsepower gear motor mounted at the end of the drum opposite the fan suction. The filter media rides on this screen and is drawn around the filter drum by the screen. At the point where

the screen and the filter media enter the cabinet, a curved stainless steel plate compresses the filter media and acts as a seal to prevent air from leaking into the cabinet. The same type of seal mechanism is provided at the exit point for the screen and the filter media. Figure III-3 shows the drum and screen mechanism used in the Rotary Drum unit. Two hundred fifty degrees of the drum is used as an active filtration surface. The remaining 110° does not provide a filtration surface because it is contained in the space btween the two seals and because it has no filter media on it.

The Rotary Drum HEAF unit is typically operated at a differential pressure across the filter media of about 28 inches H_2O. Filtration velocities at the face of the filter mat preferably range between 1,500 and 1,700 ft/min. It is necessary to insure that the differential pressure in the ductwork leading into the Rotary Drum HEAF unit is low enough to prevent negative pressures in excess of about 1 inch H_2O from developing at the inlet to the HEAF unit. The Celotex (LA) plant uses a vane-axial fan mounted directly in the ductwork leading to the HEAF unit to achieve such an inlet condition. The vane-axial fan is provided with a variable pitch drive pulley so that its speed can be increased or decreased sufficiently to provide approximately -0.2 inches H_2O at the inlet to the HEAF unit. The variable speed drive is necessary because if the pressure at the inlet to the HEAF unit becomes positive, contaminated gas will leak from the seals into the immediate surroundings.

Fumes are cooled upstream of the HEAF unit with a single manually-controlled atomized-water spray. According to plant personnel, the cooling apparently reduces or eliminates the opacity of the stack emissions. All emission tests were conducted with the cooling system "on"; therefore, the effect of cooling on the performance of the HEAF unit could not be determined. The fumes passed through a cyclonic expansion chamber that promoted mixing and cooling of the gaseous stream. The temperature of fumes entering the HEAF, after cooling, varied from 94°F to 125°F. The HEAF stack was equipped with a demister which operated at about 0.3 inches H_2O pressure drop. The pressure drop across the HEAF media averaged about 29 inches H_2O.

SCHEMATIC OF EMISSION SOURCES CONTROLLED BY HEAF INCLUDING TEST POINT (TP) AT CELOTEX'S LOS ANGELES ROOFING PLANT

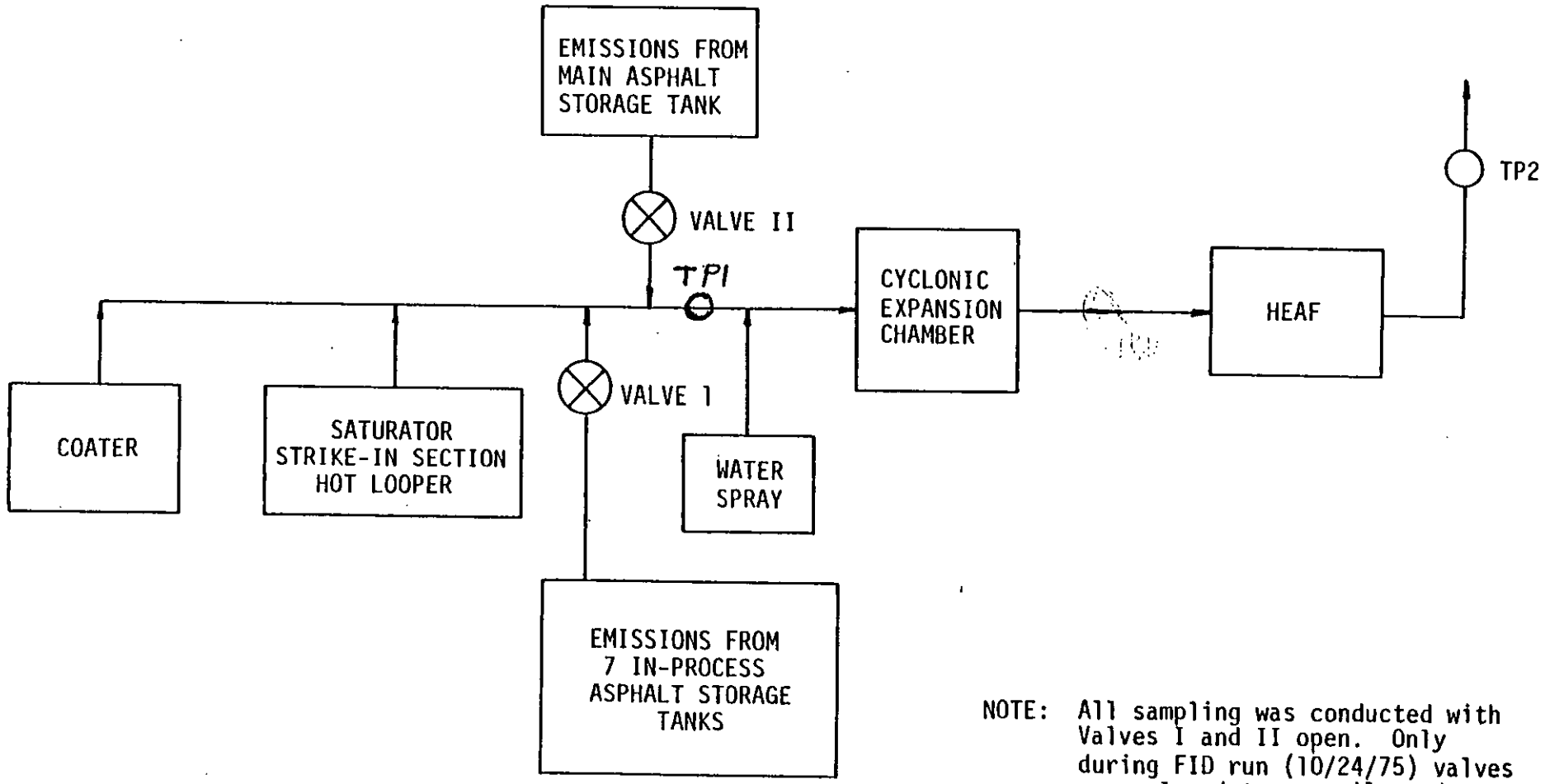

NOTE: All sampling was conducted with Valves I and II open. Only during FID run (10/24/75) valves were closed temporarily and re-opened to determine contribution of emissions from tanks.

2. For each process tested list feedstock materials and products. Indicate if activity factors are for feed (F) rate or product (P) rate.

Process ID	Feedstock materials	Products	Basis for activity factor	F/P
A	Felt, Asphalt, Granules	Shingles	Shingle Production	P

Basis for data: P. 59, P. 66
(Indicate page/table Nos. in test report)

3. For each process or operation tested and each test run note process capacity and operating rate during test.

Process ID	Capacity	Units	Test run	Process rate	Units (Shingles)
A	?	tons/hr	1	22.6	tons/hr
			2	21.7	tons/hr
			3	18.8	tons/hr
			4		
			1		
			2		
			3		
			4		
			1		
			2		
			3		
			4		
			1		
			2		
			3		
			4		

Basis for data: Pg. 66

C. Air Pollution Control Systems Tested

1. For each air pollution control system pollution control system identified in A.8, note the following

ID	Type of APCD	Manufacturer	Model No.
Z	HEAF	Anderson 2000	

Note: Be as specific as possible in identifying APCD. For example, indicate "pulse jet fabric filter" rather than simply "fabric filter."

2. For each system identified above, provide a narrative description. For fugitive systems describe capture techniques as well as the removal techniques (use a separate page if necessary)

3. Using the attached parameter list for guidance complete the table below. (Use additional pages as needed.)

APCD ID	Parameter	Units	Readings			
			Run 1	Run 2	Run 3	Run 4
Z	ΔP	in. H_2O	29			
Type of APCD: HEAF high energy air filter						
Type of APCD:						
Type of APCD:						

D. Sampling and Analysis Methods

1. Complete the following table

Test location	Pollutant	S & A method	Reference/ conditional method	Deviations noted
1	PM	Method ~~20~~ 5A	Y/N	Y/N
	THC	Method ~~20~~ "	Y/N	Y/N
			Y/N	Y/N
			Y/N	Y/N
			Y/N	Y/N
2	PM	Method ~~20~~ 5A	Y/N	Y/N
	THC	Method ~~20~~ "	Y/N	Y/N
			Y/N	Y/N
			Y/N	Y/N
			Y/N	Y/N
			Y/N	Y/N
			Y/N	Y/N
			Y/N	Y/N
			Y/N	Y/N
			Y/N	Y/N
			Y/N	Y/N
			Y/N	Y/N
			Y/N	Y/N
			Y/N	Y/N
			Y/N	Y/N
			Y/N	Y/N
			Y/N	Y/N
			Y/N	Y/N
			Y/N	Y/N
			Y/N	Y/N
			Y/N	Y/N
			Y/N	Y/N

2. If a method used was not a reference or conditional method, provide a narrative discussion including any data manipulation needed to make results correspond to reference or conditional method results.

3. Describe any deviations identified above.

E. Emission Data Documentation

1. Tabulate the following stack gas data from the test report. (Use additional pages as needed.)

Test ID	Parameter	Units	Values reported			
			Run 1	Run 2	Run 3	Run 4
1	Stack temperature	°F	141	134	142	
HEAF Inlet	Moisture	%	2.6	2.48	1.40	
	Oxygen	%				
	Volumetric flow, actual	ACFM	21,600	21,100	21,700	
	Volumetric flow, standard	DSCFM	18,300	18,100	18,600	
	Percent isokinetic	%	97.7	98.3	96.1	
	Pollutant concentration:					
	PM	gr/DSCF	0.443	2.071	0.392	
2	Stack temperature	°F	127	128	123	
HEAF Outlet	Moisture	%	3.13	2.82	1.58	
	Oxygen	%				
	Volumetric flow, actual	ACFM	22,500	22,800	22,500	
	Volumetric flow, standard	DSCFM	19,400	19,700	19,900	
	Percent isokinetic	%	97.6	100.5	100.4	
	Pollutant concentration:					
	PM	gr/DSCF	0.012	0.003	0.006	
	Stack temperature					
	Moisture					
	Oxygen					
	Volumetric flow, actual					
	Volumetric flow, standard					
	Percent isokinetic					
	Pollutant concentration:					

2. Tabulate pollutant mass flux rates

Test ID	Pollutant	Units	Mass flux rates			
			Run 1	~~Run 2~~	Run 3	Run 4
1	PM	lb/hr	69.5	321	62.6	
				Probe struck stack wall. Run VOID		
	Total VOC's	lb/hr	4.27	5.57	6.17	
2	PM	lb/hr	1.94	0.430	0.974	
	Total VOC's	lb/hr	6.58	6.33	7.04	

3. Present example emission factor calculations below.

PARTICULATE MATTER EMISSION FACTORS

INLET RUN

1 $\frac{69.5}{22.6}$ tons(shingles)/hr = 3.1 lb/ton

~~2 $\frac{321}{21.7}$ = 15 lb/ton~~

3 $\frac{62.6}{18.8}$ = 3.3 lb/ton

Uncontrolled
AVG = ~~3.1~~ 3.2 lb/ton

OUTLET RUN

1 $\frac{1.94}{22.6}$ = 0.086 lb/ton

2 $\frac{0.43}{21.7}$ = 0.020 lb/ton

3 $\frac{0.974}{18.8}$ = 0.052 lb/ton

Controlled w/ HEAF
AVG = 0.053 lb/ton

Nozzle scraped stack wall, thereby voiding run.

Total VOC Emission Factors

INLET RUN

1 $\frac{4.27}{22.6}$ = 0.19 lb/ton

2 $\frac{5.57}{21.7}$ = 0.26 lb/ton

3 $\frac{6.17}{18.8}$ = 0.33 lb/ton

UNCONTROLLED
AVG = 0.26 lb/ton

OUTLET RUN

1 $\frac{6.58}{22.6}$ = 0.29 lb/ton

2 $\frac{6.33}{21.7}$ = 0.29 lb/ton

3 $\frac{7.04}{18.8}$ = 0.37 lb/ton

"CONTROLLED" – HEAF DOES NOT CONTROL VOC'S
AVG = 0.32 lb/ton

Polycyclic Organic Matter

RUN 1

INLET – 0.0883 lb/hr
OUTLET – 0.0079 lb/hr

NO PRODUCTION RATE PROVIDED!

4. Tabulate emission factors

Process	Pollutant	Units	Average emission factor	
			Uncontrolled	Controlled
A	PM	lb/ton shingles	3.2	
	PM	lb/ton shingles		0.053
	Total VOC's	lb/ton shingles	0.26	
	Total VOC's	lb/ton shingles		0.32
1 RUN →	POM	lb/ton shingles	NO EF AVAILABLE	

Higher than controlled.

* CO + CO_2 not detected using ORSAT

ATTACHMENT A
APCD PARAMETERS

Type of APCD	Parameters
Fabric filter	Cleaning mechanism Bag type Cleaning frequency Air to cloth ratio (A/C) Pressure drop Inlet temperature
ESP	Type (wet or dry) Number of fields Rapping cycle (if dry) Specific Collection Area (SCA) Particulate resistivity (if known) Spark rate Current and power levels
Venturi (or other high energy) scrubber	Pressure drop Liquid/gas (L/G) ratio Mist eliminator type
Packed-bed scrubber	Packing depth L/G ratio Caustic use (Y/N) pH Mist eliminator type
Carbon absorber	Bed depth Superficial gas velocity Bed temperature Desorption mechanism (media) Flue-gas moisture Cycle length Time-on-line after breakthrough