Note: This is a reference cited in *AP 42, Compilation of Air Pollutant Emission Factors, Volume I Stationary Point and Area Sources.* AP42 is located on the EPA web site at www.epa.gov/ttn/chief/ap42/

The file name refers to the reference number, the AP42 chapter and section. The file name "ref02_c01s02.pdf" would mean the reference is from AP42 chapter 1 section 2. The reference may be from a previous version of the section and no longer cited. The primary source should always be checked.

AP-42 Section Number: 11.2

Reference Number: 5

Title: Background Information for Proposed Standards Asphalt Roofing Manufacturing Industry

EPA-450/3-80-021a

USEPA

June 1980

United States
Environmental Protection
Agency

Office of Air Quality
Planning and Standards
Research Triangle Park NC 27711

EPA-450/3-80-021a
June 1980

Air

EPA

Asphalt Roofing Manufacturing Industry — Background Information for Proposed Standards

Draft EIS

NSPS

Background Information
and Draft
Environmental Impact Statement
for Standards of Performance for New Stationary Sources
Asphalt Processing and Asphalt Roofing Manufacture

Type of Action: Administrative

Prepared by:

5-2-80
(Date)

Don R. Goodwin
Director, Emission Standards and Engineering Division
Environmental Protection Agency
Research Triangle Park, N. C. 27711

Approved by:

5-30-80
(Date)

David G. Hawkins
Assistant Administrator for Air, Noise, and Radiation
Environmental Protection Agency
Washington, D. C. 20460

Draft Statement Submitted to EPA's
Office of Federal Activities for Review on July, 1980
(Date)

This document may be reviewed at:

Central Docket Section
Room 2902, Waterside Mall
Environmental Protection Agency
401 M Street, S.W.
Washington, D. C. 20460

Additional copies may be obtained at:

Environmental Protection Agency Library (MD-35)
Research Triangle Park, N. C. 27711

National Technical Information Service
5285 Port Royal Road
Springfield, Virginia 22161

EPA-450/3-80-021a

Asphalt Roofing Manufacturing Industry — Background Information for Proposed Standards

Emission Standards and Engineering Division

U.S. ENVIRONMENTAL PROTECTION AGENCY
Office of Air, Noise, and Radiation
Office of Air Quality Planning and Standards
Research Triangle Park, North Carolina 27711

June 1980

This report has been reviewed by the Emission Standards and Engineering Division of the Office of Air Quality Planning and Standards, EPA, and approved for publication. Mention of trade names or commercial products is not intended to constitute endorsement or recommendation for use. Copies of this report are available through the Library Services Office (MD-35), U.S. Environmental Protection Agency, Research Triangle Park, N.C. 27711, or from National Technical Information Services, 5285 Port Royal Road, Springfield, Virginia 22161.

Publication No. EPA-450/3-80-021a

TABLE OF CONTENTS

		Page
List of Figures		v
List of Tables		viii
CHAPTER 1	SUMMARY	1-1
1.1	Regulatory Alternatives	1-1
1.2	Environmental Impact	1-2
1.3	Economic Impact	1-2
CHAPTER 2	INTRODUCTION	2-1
2.1	Background and Authority for the Standards	2-1
2.2	Selection of Categories of Stationary Sources	2-5
2.3	Procedure for Development of Standards of Performance	2-6
2.4	Consideration of Costs	2-9
2.5	Consideration of Environmental Impacts	2-10
2.6	Impact on Existing Sources	2-11
2.7	Revision of Standards of Performance	2-11
CHAPTER 3	THE ASPHALT ROOFING MANUFACTURING INDUSTRY	3-1
3.1	General	3-1
3.2	Processes and Their Emissions	3-8
3.3	Baseline Emissions	3-39
3.4	References for Chapter 3	3-47
CHAPTER 4	EMISSION CONTROL TECHNIQUES	4-1
4.1	Introduction	4-1
4.2	Process and Equipment Controls	4-1
4.3	Control Systems	4-5

TABLE OF CONTENTS (continued)

		Page
4.4	Performance of Emission Control Systems	4-28
4.5	References for Chapter 4	4-55
CHAPTER 5	MODIFICATION AND RECONSTRUCTION	5-1
5.1	40 CFR Part 60 Provisions for Modification and Reconstruction	5-2
5.2	Applicability to Asphalt Roofing Plants	5-3
5.3	Summary	5-4
CHAPTER 6	MODEL PLANTS AND REGULATORY ALTERNATIVES	6-1
6.1	Purpose	6-1
6.2	Model Plants	6-1
6.3	Regulatory Alternatives	6-16
6.4	References for Chapter 6	6-23
CHAPTER 7	ENVIRONMENTAL IMPACT	7-1
7.1	Air Pollution Impact	7-1
7.2	Water Pollution Impact	7-27
7.3	Solid Waste Disposal	7-27
7.4	Energy Impact	7-28
7.5	Other Environmental Impacts	7-30
7.6	Other Environmental Concerns	7-32
7.7	References for Chapter 7	7-33
CHAPTER 8	ECONOMIC IMPACT	8-1
8.1	Industry Characterization	8-1
8.2	Cost Analysis of Regulatory Alternatives	8-56
8.3	Other Cost Considerations	8-123
8.4	Economic Impact Assessment	8-123

Errata Sheet

ASPHALT ROOFING MANUFACTURING INDUSTRY -

BACKGROUND INFORMATION FOR PROPOSED STANDARDS

EPA-450/3-80-021a

Please note that the following changes must be made to pages D-1 and D-3 of this report:

p. D-1 The first sentence of the second paragraph should read: "Method development tests and emission measurements were conducted at five asphalt roofing plants."

The three references to the filtration temperature for Reference Method 26 should be changed from 40°C (104°F) to read 52°C (126°F).

p. D-3 The two references to the filtration temperature for Reference Method 26 should be changed from 40°C (104°F) to read 52°C (126°F).

TABLE OF CONTENTS (concluded)

		Page
8.5	Socio-Economic Impact Assessment	8-141
8.6	References for Chapter 8	8-144
APPENDIX A	EVOLUTION OF THE PROPOSED STANDARD	A-1
A-1	Chronology	A-1
APPENDIX B	INDEX TO ENVIRONMENTAL IMPACT CONSIDERATIONS . . .	B-1
APPENDIX C	SUMMARY OF TEST DATA	C-1
C.1	Introduction	C-1
C.2	Emission Test Program for Manufacture of Asphalt Roofing	C-1
C.3	Emission Test Program for Selected Non-Metallic Mineral Processes	C-4
APPENDIX D	EMISSION MEASUREMENT AND CONTINUOUS MONITORING . .	D-1
D.1	Emission Measurement Methods	D-1
D.2	Continuous Monitoring	D-3
D.3	Performance Test Methods	D-4

LIST OF FIGURES

		Page
Figure 1-1	Matrix of Environmental and Economic Impacts for Regulatory Alternatives	1-3
Figure 3-1	Processing Chart for Asphalt Roofing Products from Raw Materials to Finished Roofing	3-2
Figure 3-2	Location of Asphalt Roofing Manufacturing Facilities Within the United States	3-7
Figure 3-3	Typical Flow Diagram for Production of Asphalt-Saturated Felt	3-9
Figure 3-4	Typical Flow Sheet for Manufacturing Shingles and Rolls	3-10
Figure 3-5	Block Diagram, Asphalt Roofing Line	3-11
Figure 3-6	Surfacing Section of Typical Asphalt Roofing Manufacturing Line	3-14
Figure 3-7	Alternative Method for Applying Parting Agent	3-16
Figure 3-8	Asphalt Delivery Systems	3-20
Figure 3-9	In-Plant Asphalt Transfers	3-21
Figure 3-10	Mineral Products Delivery	3-24
Figure 3-11	Pneumatic Conveying Systems	3-25
Figure 3-12	Block Diagram of In-plant Transfers and Temporary Storage	3-27
Figure 3-13	In-plant Transfer of Bagged Mineral Products	3-28
Figure 3-14	Air-Blowing of Asphalt	3-31
Figure 3-15	Design Features of Vertical Still Equipped with a Cyclone Oil Recovery System	3-33
Figure 3-16	Design Features of Horizontal Still	3-34
Figure 4-1	Total Enclosure of Saturator, Wet Looper, and Coater	4-7
Figure 4-2	Typical Rotary Drum High Velocity Air Filter Installation	4-9

LIST OF FIGURES (continued)

		Page
Figure 4-3	HVAF Filter Media Filtration Efficiency as a Function of Filter Face Velocity for Different Filter Media	4-11
Figure 4-4	Typical Mini-HVAF	4-13
Figure 4-5	Schematic of Retaining Screens and Fiber Packing of a Mist Eliminator	4-15
Figure 4-6	Typical Mist Eliminator Element to Control Emissions from Asphalt Storage Tank	4-16
Figure 4-7	Steps Required for Successful Incineration of Combustible Dilute Fumes in a Thermal Afterburner	4-19
Figure 4-8	Coupled Effects of Time and Temperature on Rate of Pollutant Oxidation	4-20
Figure 4-9	Typical Effect of Operating Temperature on Effectiveness of Thermal Afterburner for Destruction of Hydrocarbons and Carbon Monoxide	4-21
Figure 4-10	Schematic of a Two-Pass Modular Electrostatic Precipitator	4-24
Figure 4-11	Modular Electrostatic Precipitator	4-25
Figure 4-12	Particulate Emissions from Asphalt Roofing Processes When Various Control Devices are Used (EPA Tests)	4-42
Figure 4-13	Extrapolation of Efficiency Versus Temperature Curve for the Afterburners at Plant B	4-49
Figure 4-14	Particulate Emissions from an Afterburner Controlling an Asphalt Blowing Still	4-51
Figure 4-15	Particulate Emissions from Crushed Stone Facilities	4-53
Figure 6-1	Configuration 1 for Small Plant	6-4
Figure 6-2	Configuration 2 for Small Plant	6-5
Figure 6-3	Configuration 1 for Medium Plant	6-6
Figure 6-4	Configuration 2 for Medium Plant	6-7
Figure 6-5	Configuration 1 for Large Plant	6-8

LIST OF FIGURES (concluded)

		Page
Figure 6-6	Configuration 2 for Large Plant	6-9
Figure 6-7	Regulatory Alternatives and Controlled Facilities	6-17
Figure 8-1	Processing Chart for Asphalt Roofing Products: From Raw Materials to Finished Roofing	8-3
Figure 8-2	106.6-kg (235-lb), 3-Tab, Self-Seal Strip Shingle	8-15
Figure 8-3	Location of Asphalt Roofing Manufacturing Facilities Within the United States	8-20
Figure 8-4	Shipping Trends in Roofing Manufacturing.	8-35
Figure 8-5	Stability in Asphalt Roofing Production	8-127
Figure 8-6	Relationship Between Price and Production	8-128
Figure C-1	Schematic of Ducting Arrangement and Test Points (TP)--Plant A	C-7
Figure C-2	Block Diagram Showing Relative Locations of Process Components and Sample Points--Plant B . .	C-16
Figure C-3	Schematic of Emission Sources Controlled by HVAF Including Test Point (TP)	C-27
Figure C-4	HVAF Stack Outlet--Plant C	C-28
Figure C-5	HVAF Inlet Duct (Fugitive)--Plant C	C-29
Figure C-6	Saturator Spray/Dip (Fugitive)--Plant C	C-30
Figure C-7	Saturator Strike-In and Coater (Fugitive)--Plant C	C-31
Figure C-8	Block Diagram Showing Sampling Location--Plant D	C-38
Figure C-9	Block Diagram Showing Relative Locations of Process Components and Sample Points--Plant E . .	C-42

LIST OF TABLES

		Page
Table 3-1	Emission Sources and Variables Affecting Emissions in an Asphalt Roofing Plant	3-36
Table 3-2	Uncontrolled Emissions from Asphalt Roofing Plants From Test Data	3-37
Table 3-3	Summary of Emission Regulations and Location of Asphalt Roofing Plants by State	3-40
Table 3-4	Baseline Particulate Emissions for Various Size Model Plants According to State Implementation Plans (SIP's)	3-46
Table 4-1	Asphalt Roofing Plant Emission Sources and Add-On Control Devices	4-2
Table 4-2	Asphalt Parameters	4-4
Table 4-3	Storage and Operating Temperatures	4-6
Table 4-4	EPA Test Data at Asphalt Roofing Plant A (Metric)	4-29
Table 4-4a	EPA Test Data at Asphalt Roofing Plant A (English)	4-30
Table 4-5	EPA Test Data at Asphalt Roofing Plant B (Metric)	4-31
Table 4-5a	EPA Test Data at Asphalt Roofing Plant B (English)	4-33
Table 4-6	EPA Test Data at Asphalt Roofing Plants C and D (Metric)	4-35
Table 4-6a	EPA Test Data at Asphalt Roofing Plants C and D (English)	4-37
Table 4-7	EPA Test Data at Asphalt Roofing Plant E (Metric)	4-39
Table 4-7a	EPA Test Data at Asphalt Roofing Plant E (English)	4-40
Table 4-8	Summary of Fugitive Emissions Data from Capture Systems	4-43
Table 4-9	Summary of Visible Emission Tests - Control Device Stack Outlet	4-46
Table 4-10	Visible Emissions from Minerals Handling and Storage Facilities	4-54

LIST OF TABLES (continued)

		Page
Table 6-1	Model Plant Production Rates and Operating Parameters	6-2
Table 6-2	Blowing Still Parameters for Model Plants	6-3
Table 6-3	Raw Materials and Utility Requirements for Model Plants	6-12
Table 6-4	Baseline Model Plant Control System - Alternative 1 (Small)	6-13
Table 6-5	Baseline Model Plant Control System - Alternative 1 (Medium)	6-14
Table 6-6	Baseline Model Plant Control System - Alternative 1 (Large)	6-15
Table 6-7	Model Plant Control Systems for Regulatory Alternatives 2 to 5 (Small)	6-20
Table 6-8	Model Plant Control Systems for Regulatory Alternatives 2 to 5 (Medium)	6-21
Table 6-9	Model Plant Control Systems for Regulatory Alternatives 2 to 5 (Large)	6-22
Table 7-1	Annual Mass Particulate Emissions from Baseline Model Plants With and Without Blowing Still (Alternative 1)	7-2
Table 7-2	Annual Mass Particulate Emissions from Small Plants for Regulatory Alternatives 2 Through 5	7-4
Table 7-3	Annual Mass Particulate Emissions from Medium Plants for Regulatory Alternatives 2 Through 5	7-5
Table 7-4	Annual Mass Particulate Emissions from Large Plants for Regulatory Alternatives 2 Through 5	7-6
Table 7-5	Summary of SO and CO Emissions from Afterburners Used to Control a Saturator and a Blowing Still	7-7
Table 7-6	Stack and Building Coordinates and Dimensions (All Plant Sizes)	7-9
Table 7-7	Stack Exit Temperature, Exit Velocities, and Particulate Emission Rates for Medium Plants (Metric)	7-10

LIST OF TABLES (continued)

		Page
Table 7-7a	Stack Exit Temperature, Exit Velocities, and Particulate Emission Rates for Medium Plants (English)	7-11
Table 7-8	Regulatory Alternatives Applicable to the Twelve Hypothetical Asphalt Roofing Plants	7-12
Table 7-9	Calculated Maximum 24-Hour Average Ground-Level Particulate Concentrations for the Individual Stacks at Medium Asphalt Roofing Plants	7-14
Table 7-10	Maximum 24-Hour Average Concentrations at the Plant Boundary for the Combined Stacks of the Medium Asphalt Roofing Plants (Metric)	7-15
Table 7-10a	Maximum 24-Hour Average Concentrations at the Plant Boundary for the Combined Stacks of the Medium Asphalt Roofing Plants (English)	7-19
Table 7-11	Maximum 24-Hour Average Particulate Concentrations Calculated for Medium Configuration C1 Asphalt Roofing Plants (Regulatory Alternative 1) Located in the Pittsburgh and Oklahoma City Areas	7-23
Table 7-12	Maximum 24-Hour Average Particulate Concentrations Calculated for the Combined Stacks of the Medium-Size Asphalt Roofing Plants	7-25
Table 7-13	Summary of Annual Total Particulate Emissions from Model Plant Configurations 1 and 2 (All Sizes) Under the Various Regulatory Alternatives and the Percent Reduction in Emissions from the Baseline Model Plant for the Various Alternatives	7-26
Table 7-14	Electricity Increase Over Baseline Electrical Demand for Regulatory Alternatives 2, 3, 4, and 5	7-29
Table 7-15	Annual Energy Requirement for Afterburners and Percent Fuel Increase from Baseline Model Plant for the Various Regulatory Alternatives	7-31
Table 8-1	ASTM Specifications for Roll Roofing Saturants (Metric)	8-4
Table 8-1a	ASTM Specifications for Roll Roofing Saturants (English)	8-5
Table 8-2	ASTM Specifications for Shingle Saturants (Metric)	8-6

LIST OF TABLES (continued)

		Page
Table 8-2a	ASTM Specifications for Shingle Saturants (English)	8-7
Table 8-3	ASTM Specifications for Coating Asphalts (Metric) .	8-8
Table 8-3a	ASTM Specifications for Coating Asphalts (English).	8-9
Table 8-4	Typical Asphalt Roofing Products (Metric)	8-11
Table 8-4a	Typical Asphalt Roofing Products (English).	8-12
Table 8-5	Typical Roofing Compositions (Metric)	8-13
Table 8-5a	Typical Roofing Compositions (English).	8-14
Table 8-6	Asphalt Roofing Manufacturers	8-17
Table 8-7	Quantities of Asphalt Roofing Product Shipments in 1977, by Region.	8-22
Table 8-8	Annual U.S. Production, Consumption, Imports, Exports, and Stock of Asphalt, 1969-1977 (Thousands of m^3 of Asphalt).	8-24
Table 8-8a	Annual U.S. Production, Consumption, Imports, Exports, and Stock of Asphalt 1969-1977 (Thousands of Barrels of Asphalt)	8-25
Table 8-9	U.S. Distribution of Asphalt Production Capacity, by State.	8-27
Table 8-10	U.S. Asphalt Production Capacity, by Company. . . .	8-29
Table 8-11	Annual Production of Asphalt and Tar Roofing and Siding Products (in Megagrams).	8-31
Table 8-11a	Annual Production of Asphalt and Tar Roofing and Siding Products (in Tons)	8-32
Table 8-12	Quantities of Asphalt Roofing Product Shipments by Region, 1970-1977.	8-33
Table 8-13	Annual Production of Asphalt and Tar Roofing and Siding Products as a Percent of Total Annual Production, 1970-1977	8-34
Table 8-14	Estimated Annual Employment in the Asphalt Roofing and Siding Products Industry, 1969-1976 . .	8-36

LIST OF TABLES (continued)

		Page
Table 8-15	Producer Price Index for Asphalt Roofing and Price of Asphalt Roofing Strip Shingles, 1969-1978	8-39
Table 8-16	Manufacturers' Prices of Standard Asphalt Shingles to Distributor	8-40
Table 8-17	Values and Quantities of Product Shipments in the Asphalt and Tar Roofing and Siding Products Industry, 1969-1976	8-41
Table 8-18	Value of Product Shipments in the Asphalt Roofing Industry, 1969-1976	8-43
Table 8-19	Purchase Prices of Various Roofing Asphalts from 1974 to 1979	8-44
Table 8-20	Producer Price Indices and Percent Increases for Selected Products in the Pulp, Paper, and Allied Products Industry, 1970-1978	8-45
Table 8-21	Annual Production and Percent Annual Production Changes from Year to Year in Asphalt Roofing and Siding Products, 1969-1977 (Metric)	8-47
Table 8-21a	Annual Production and Percent Annual Production Changes from Year to Year in Asphalt Roofing and Siding Products, 1969-1977 (English)	8-48
Table 8-22	Estimated Annual Expenditures for New Plant and Equipment by the Asphalt Roofing and Siding Industry, 1969-1976.	8-50
Table 8-23	Estimated Annual Expenditures for New Plant and Equipment by the Asphalt Roofing and Siding Industry, Adjusted to 1957-1959 Dollars, for 1969-1976	8-51
Table 8-24	Estimated End-of-Year Gross Book Value of Assets in the Asphalt Roofing Industry, 1969-1976	8-52
Table 8-25	Estimated End-of-Year Gross Book Value of Depreciable Assets in the Asphalt Roofing and Siding Industry, Adjusted to 1957-1959 Dollars, 1969-1976	8-54
Table 8-26	Chemical Engineering Plant Cost Indices and Subcomponents for October 1973 and November 1978. .	8-58

LIST OF TABLES (continued)

		Page
Table 8-27	Estimated Capital Investment Costs of New Asphalt Roofing Facilities Without Pollution Control Equipment	8-60
Table 8-28	Estimated Total Annualized Costs for New Asphalt Roofing Plants Without Pollution Control Equipment.	8-63
Table 8-29	Annual Raw Material Costs for Asphalt Roofing Plants (Metric)	8-64
Table 8-29a	Annual Raw Material Costs for Asphalt Roofing Plants (English).	8-65
Table 8-30	Annual Utility Requirements and Costs for Model Asphalt Roofing Plants Without Pollution Control Equipment (Metric).	8-68
Table 8-30a	Annual Utility Requirements and Costs for Model Asphalt Roofing Plants Without Pollution Control Equipment (English)	8-69
Table 8-31	Annualized Costs and Unit Product Costs of New Model Asphalt Roofing Plants Without Pollution Control Systems	8-71
Table 8-32	Pollution Control Systems and Operating Characteristics for Baseline Asphalt Roofing Model Plants (Metric)	8-74
Table 8-32a	Pollution Control Systems and Operating Characteristics for Baseline Asphalt Roofing Model Plants (English).	8-75
Table 8-33	Pollution Control Systems and Operating Characteristics for Regulatory Alternatives 2 to 5 (Metric)	8-76
Table 8-33a	Pollution Control Systems and Operating Characteristics for Regulatory Alternatives 2 to 5 (English)	8-77
Table 8-34	Uncontrolled Particulate Emissions from Each Operation at the Model Asphalt Roofing Plants on an Annual Basis.	8-83
Table 8-35	Uncontrolled Particulate Emissions, Control Emissions, and Particulate Pollutants Collected for Each Model Asphalt Roofing Plant Operation and Pollution Control Device.	8-85

LIST OF TABLES (continued)

		Page
Table 8-36	Control Efficiencies of the Pollution Control Devices Used in the Model Asphalt Roofing Plants .	8-87
Table 8-37	Capital Investment Costs of Pollution Control Systems for the Baseline Model Asphalt Roofing Plants	8-88
Table 8-38	Capital Investment Costs of Pollution Control Systems for Model Asphalt Roofing Plants for Regulatory Alternatives 2 and 3	8-89
Table 8-39	Capital Investment Costs of Pollution Control Systems for Model Asphalt Roofing Plants for Regulatory Alternatives 4 and 5	8-90
Table 8-40	Capital Cost Increase from Baseline for Pollution Control Systems	8-96
Table 8-41	Total Annualized Cost of Pollution Control Systems for Model Asphalt Roofing Plants for the Five Regulatory Alternatives Without Recovery Credits. .	8-98
Table 8-42	Annual Labor and Supervision Cost Increase from Baseline for Model Asphalt Roofing Plant Pollution Control Devices	8-99
Table 8-43	Annual Utility Requirements and Cost Increase from Baseline for Individual Pollution Control Devices Used in Model Asphalt Roofing Plants (Metric) . . .	8-101
Table 8-43a	Annual Utility Requirements and Cost Increase from Baseline for Individual Pollution Control Devices Used in Model Asphalt Roofing Plants (English). . .	8-102
Table 8-44	Increase in Annual Variable and Fixed Operating Costs from Baseline of Individual Pollution Control Devices for the Model Asphalt Roofing Plants . . .	8-104
Table 8-45	Increase in Annualized Costs of Pollution Control Systems for Alternatives 2 to 5 Compared to the Baseline Pollution Control Systems	8-106
Table 8-46	Cost Effectiveness of Pollution Control Devices Used in Model Asphalt Roofing Plants	8-108
Table 8-47	Cost Effectiveness of Pollution Control Systems for Model Asphalt Roofing Plants	8-109

LIST OF TABLES (continued)

		Page
Table 8-48	Total Capital Investment Costs of a Small, New Asphalt Roofing Plant With A Pollution Control System.	8-112
Table 8-49	Total Capital Investment Costs of a Medium, New Asphalt Roofing Plant With a Pollution Control System.	8-113
Table 8-50	Total Capital Investment Costs of a Large, New Asphalt Roofing Plant With a Pollution Control System	8-114
Table 8-51	Total Annualized Costs for a Small, New Asphalt Roofing Plant With a Pollution Control System . . .	8-115
Table 8-52	Total Annualized Costs for a Medium, New Asphalt Roofing Plant With a Pollution Control System . . .	8-116
Table 8-53	Total Annualized Costs for a Large, New Asphalt Roofing Plant With a Pollution Control System . . .	8-117
Table 8-54	Unit Product Costs of a Small, New Asphalt Roofing Plant With a Pollution Control System . . .	8-119
Table 8-55	Unit Product Costs of a Medium, New Asphalt Roofing Plant With a Pollution Control System . . .	8-120
Table 8-56	Unit Product Costs of a Large, New Asphalt Roofing Plant With a Pollution Control System . . .	8-121
Table 8-57	DCF for Small Plant	8-135
Table 8-58	DCF for Medium Plant	8-136
Table 8-59	DCF for Large Plant	8-137
Table C-1	Visible Emission Composite Summaries--Plant A . . .	C-8
Table C-2	Particulate and Gaseous Hydrocarbon Concentrations and Emission Data Summary--Plant A (Metric)	C-12
Table C-2a	Particulate and Gaseous Hydrocarbon Concentrations and Emission Data Summary--Plant A (English) . . .	C-13
Table C-3	Particulate Polycyclic Organic Matter Concentration and Emission Data Summary--Plant A (Metric)	C-14
Table C-3a	Particulate Polycyclic Organic Matter Concentration and Emission Data Summary--Plant A (English) . . .	C-15

LIST OF TABLES (continued)

		Page
Table C-4	Summary of Visible Emission Data--Plant B	C-17
Table C-5	Summary of Particulate and Gaseous Hydrocarbon Concentration and Emission Rates--Plant B (Metric).	C-18
Table C-5a	Summary of Particulate and Gaseous Hydrocarbon Concentration and Emission Rates--Plant B (English)	C-20
Table C-6	Summary of Pom Data--Plant B (Metric)	C-22
Table C-6a	Summary of Pom Data--Plant B (Metric)	C-23
Table C-7	Aldehyde Results--Plant B	C-24
Table C-8	CO Emissions and Emission Rates--Plant B	C-25
Table C-9	NO_x Results--Plant B	C-26
Table C-10	Particulate Emission Tests Summary: Performance of HVAF Control Device--Plant C	C-32
Table C-11	Polycyclic Organic Matter (POM) Emission Tests Summary--Plant C (Metric)	C-33
Table C-11a	Polycyclic Organic Matter (POM) Emission Tests Summary--Plant C (English)	C-34
Table C-12	Total Hydrocarbon Emission Tests Summary--Plant C (Metric) (English)	C-35
Table C-13	Flame Ionization Detector (FID) Data Summary--Plant C--HVAF Inlet	C-36
Table C-14	Flame Ionization Detector (FID) Data Summary--Plant C--HVAF Outlet	C-37
Table C-15	Summary of Visible Emission Data--Plant D	C-39
Table C-16	Particulate and Gaseous Hydrocarbon Results of Shingle Line Saturator HVAF Filter System Plant D	C-41
Table C-17	Summary of Visible Emission Data--Plant E	C-43
Table C-18	Performance Summary of Emission Reduction System for Blowing Stills Saturate Blows--Plant E (Metric)	C-44

LIST OF TABLES (continued)

		Page
Table C-18a	Performance Summary of Emission Reduction System for Blowing Stills, Saturate Blows--Plant E (English)	C-45
Table C-19	Performance Summary of Emission Reduction System for Blowing Stills, Coating Blows--Plant E (Metric)	C-46
Table C-19a	Performance Summary of Emission Reduction System for Blowing Stills, Coating Blows--Plant E (English)	C-47
Table C-20	Summary of POM Data--Plant E (Metric)	C-48
Table C-20a	Summary of POM Data--Plant E (English)	C-49
Table C-21	SO_2 and NO_x Readings by Continuous Monitoring Analysis--Plant E	C-50
Table C-22	Aldehyde Results--Plant E (Metric)	C-51
Table C-22a	Aldehyde Results--Plant E (English)	C-51
Table C-23	Summary of Visible Emission Data--Plant F	C-53
Table C-24	Summary of Visible Emissions--Plant G	C-54
Table C-25	Summary of Visible Emissions--Plant H	C-55
Table C-26	Summary of Visible Emissions--Plant J	C-56
Table C-27	Summary of Visible Emissions--Plant K	C-57
Table C-28	Summary of Visible Emissions--Plant L	C-58

1. SUMMARY

1.1 REGULATORY ALTERNATIVES

Standards of performance for new stationary sources are developed under Section 111 of the Clean Air Act (42 U.S.C. 1857C-6) as amended. Section 111 requires the establishment of standards of performance for new stationary sources which ". . . may contribute significantly to air pollution which causes or contributes to the endangerment of public health or welfare." The Act requires standards of performance for such sources to ". . . reflect the degree of emission limitation and the percentage reduction achievable through application of the best technological system of continuous emission reduction which (taking into consideration the cost of achieving such emission reduction, any non-air quality health and environmental impact, and energy requirements) the Administrator determines has been adequately demonstrated." The standards apply only to stationary sources, the construction or modification of which starts after regulations are proposed in the Federal Register.

Five regulatory alternatives were studied. The first alternative would not require promulgation of an NSPS. Asphalt roofing manufacturing (ARM) facilities would continue to be regulated by State Implementation Plans (SIP's). Alternatives 2, 3, 4, and 5 would apply well-designed and operated particulate control technology to different combinations of the four major affected facilities which may be located in ARM plants, oil refineries, or asphalt processing plants. Alternative 2 would require control of the saturator and the asphalt storage tanks. Alternative 3 would require control of the blowing still in addition to the saturator and storage tanks. Control of the mineral handling and storage facilities, the saturator, and the asphalt storage tanks would be required under Alternative 4. Alternative 5 would require control of all four facilities.

1.2 ENVIRONMENTAL IMPACT

The beneficial and adverse environmental impacts associated with each alternative are summarized in this section and in Figure 1-1.

It is projected that over the next 5 years three new asphalt roofing plants with blowing stills will be built. Regulatory Alternative 1 would have no impact on energy, water, solid waste, or noise. There would be an adverse impact on air quality. Emissions would increase by 684 megagrams (754 tons) in the fifth year.

A beneficial air impact would result from adoption of Regulatory Alternatives 2, 3, 4, and 5. The projected decrease in annual emissions below baseline (Alternative 1) for the fifth year for Alternatives 2 through 5 is listed below.

1. Alternative 2 - 226 Mg/yr (249 tons/yr)
2. Alternative 3 - 524 Mg/yr (578 tons/yr)
3. Alternative 4 - 237 Mg/yr (261 tons/yr)
4. Alternative 5 - 535 Mg/yr (590 tons/yr)

The projected increase in energy above the baseline in the fifth year after promulgation would be 0.2 percent (1.1 bbl of oil/day) for Alternatives 2 and 4 and 3.0 percent (16 bbl of oil/day) for Alternatives 3 and 5. Alternatives 2 through 5 would have a negligible impact on water and solid waste and no impact on noise.

1.3 ECONOMIC IMPACT

Capital and annualized costs were estimated for the Regulatory Alternatives. In each case, cost figures were developed for three model plant sizes with and without blowing stills (Section 8.2). A brief summary of the economic impacts associated with each regulatory alternative is presented in this section and in Figure 1-1.

The capital cost increase from baseline for Regulatory Alternatives 2 and 3 would be $215,000, and for Regulatory Alternatives 4 and 5 the increase would be $305,000. The annualized cost increase from baseline (Alternative 1) for Regulatory Alternative 2 is $81,000; for Regulatory Alternative 3, $160,000; for Regulatory Alternative 4, $109,000; and for Regulatory Alternative 5, $188,000. The cost to manufacture asphalt roofing would be increased if any one of Regulatory Alternatives 2, 3, 4,

Administrative action	Air impact	Water impact	Solid waste impact	Energy impact	Noise impact	Economic impact
Alternative 1	-3**	0	0	0	0	0
Alternative 2	+2**	-1**	-1**	-1**	0	-1**
Alternative 3	-3**	-1**	-1**	-1**	0	-1**
Alternative 4	+2**	-1**	-1**	-1**	0	-1**
Alternative 5	+3**	-1**	-1**	-1**	0	-1**
Delayed	+1*	-1*	-1*	-1*	0	-1*

Key: + Beneficial impact.
- Adverse impact.
0 No impact.
1 Negligible impact.
2 Small impact.
3 Moderate impact.
4 Large impact.
* Short term impact.
** Long term impact.
*** Irreversible impact.

Figure 1-1. Matrix of environmental and economic impacts for regulatory alternatives

or 5 were adopted. The average price increase for ARM products would be 0.2 percent for Alternatives 2 and 4 and 0.3 percent for Alternatives 3 and 5. The estimated cost increase for a roof on a new, typical three-bedroom house would be $3 for Regulatory Alternatives 3 or 5.

2. INTRODUCTION

2.1 BACKGROUND AND AUTHORITY FOR STANDARDS

Before standards of performance are proposed as a Federal regulation, air pollution control methods available to the affected industry and the associated costs of installing and maintaining the control equipment are examined in detail. Various levels of control based on different technologies and degrees of efficiency are expressed as regulatory alternatives. Each of these alternatives is studied by EPA as a prospective basis for a standard. The alternatives are investigated in terms of their impacts on the economics and well-being of the industry, the impacts on the national economy, and the impacts on the environment. This document summarizes the information obtained through these studies so that interested persons will be able to see the information considered by EPA in the development of the proposed standard.

Standards of performance for new stationary sources are established under Section 111 of the Clean Air Act (42 U.S.C. 7411) as amended, hereinafter referred to as the Act. Section 111 directs the Administrator to establish standards of performance for any category of new stationary source of air pollution which ". . . causes, or contributes significantly to, air pollution which may reasonably be anticipated to endanger public health or welfare."

The Act requires that standards of performance for stationary sources reflect ". . . the degree of emission reduction achievable which (taking into consideration the cost of achieving such emission reduction, and any non-air quality health and environmental impacts, and energy requirements) the Administrator determines has been adequately demonstrated for that category of sources." The standards apply only to stationary sources,

the construction or modification of which commences after regulations are proposed by publication in the Federal Register.

The 1977 amendments to the Act altered or added numerous provisions that apply to the process of establishing standards of performance.

1. EPA is required to list the categories of major stationary sources that have not already been listed and regulated under standards of performance. Regulations must be promulgated for these new categories on the following schedule:

a. 25 percent of the listed categories by August 7, 1980.

b. 75 percent of the listed categories by August 7, 1981.

c. 100 percent of the listed categories by August 7, 1982.

A governor of a State may apply to the Administrator to add a category not on the list or may apply to the Administrator to have a standard of performance revised.

2. EPA is required to review the standards of performance every 4 years and, if appropriate, revise them.

3. EPA is authorized to promulgate a standard based on design, equipment, work practice, or operational procedures when a standard based on emission levels is not feasible.

4. The term "standards of performance" is redefined, and a new term "technological system of continuous emission reduction" is defined. The new definitions clarify that the control system must be continuous and may include a low- or non-polluting process or operation.

5. The time between the proposal and promulgation of a standard under Section 111 of the Act may be extended to 6 months.

Standards of performance, by themselves, do not guarantee protection of health or welfare because they are not designed to achieve any specific air quality levels. Rather, they are designed to reflect the degree of emission limitation achievable through application of the best adequately demonstrated technological system of continuous emission reduction, taking into consideration the cost of achieving such emission reduction, any non-air quality health and environmental impacts, and energy requirements.

Congress had several reasons for including these requirements. First, standards with a degree of uniformity are needed to avoid situations

where some States may attract industries by relaxing standards relative to other States. Second, stringent standards enhance the potential for long-term growth. Third, stringent standards may help achieve long-term cost savings by avoiding the need for more expensive retrofitting when pollution ceilings may be reduced in the future. Fourth, certain types of standards for coalburning sources can adversely affect the coal market by driving up the price of low-sulfur coal or effectively excluding certain coals from the reserve base because their untreated pollution potentials are high. Congress does not intend that new source performance standards contribute to these problems. Fifth, the standard-setting process should create incentives for improved technology.

Promulgation of standards of performance does not prevent State or local agencies from adopting more stringent emission limitations for the same sources. States are free under Section 116 of the Act to establish even more stringent emission limits than those established under Section 111 or those necessary to attain or maintain the National Ambient Air Quality Standards (NAAQS) under Section 110. Thus, new sources may in some cases be subject to limitations more stringent than standards of performance under Section 111, and prospective owners and operators of new sources should be aware of this possibility in planning for such facilities.

A similar situation may arise when a major emitting facility is to be constructed in a geographic area that falls under the prevention of significant deterioration of air quality provisions of Part C of the Act. These provisions require, among other things, that major emitting facilities to be constructed in such areas are to be subject to best available control technology. The term Best Available Control Technology (BACT), as defined in the Act, means

> . . . an emission limitation based on the maximum degree of reduction of each pollutant subject to regulation under this Act emitted from, or which results from, any major emitting facility, which the permitting authority, on a case-by-case basis, taking into account energy, environmental, and economic impacts and other costs, determines is achievable for such facility through application of production processes and available methods, systems, and techniques, including fuel cleaning or

> treatment or innovative fuel combustion techniques for control of each such pollutant. In no event shall application of "best available control technology" result in emissions of any pollutants which will exceed the emissions allowed by any applicable standard established pursuant to Sections 111 or 112 of this Act. (Section 169(3))

Although standards of performance are normally structured in terms of numerical emission limits where feasible, alternative approaches are sometimes necessary. In some cases physical measurement of emissions from a new source may be impractical or exorbitantly expensive. Section 111(h) provides that the Administrator may promulgate a design or equipment standard in those cases where it is not feasible to prescribe or enforce a standard of performance. For example, emissions of hydrocarbons from storage vessels for petroleum liquids are greatest during tank filling. The nature of the emissions, high concentrations for short periods during filling and low concentrations for longer periods during storage, and the configuration of storage tanks make direct emission measurement impractical. Therefore, a more practical approach to standards of performance for storage vessels has been equipment specification.

In addition, Section 111(i) authorizes the Administrator to grant waivers of compliance to permit a source to use innovative continuous emission control technology. In order to grant the waiver, the Administrator must find: (1) a substantial likelihood that the technology will produce greater emission reductions than the standards require or an equivalent reduction at lower economic energy or environmental cost; (2) the proposed system has not been adequately demonstrated; (3) the technology will not cause or contribute to an unreasonable risk to the public health, welfare, or safety; (4) the governor of the State where the source is located consents; and (5) the waiver will not prevent the attainment or maintenance of any ambient standard. A waiver may have conditions attached to assure the source will not prevent attainment of any NAAQS. Any such condition will have the force of a performance standard. Finally, waivers have definite end dates and may be terminated earlier if the conditions are not met or if the system fails to perform

as expected. In such a case, the source may be given up to 3 years to meet the standards with a mandatory progress schedule.

2.2 SELECTION OF CATEGORIES OF STATIONARY SOURCES

Section 111 of the Act directs the Adminstrator to list categories of stationary sources. The Administrator ". . . shall include a category of sources in such list if in his judgment it causes, or contributes significantly to, air pollution which may reasonably be anticipated to endanger public health or welfare." Proposal and promulgation of standards of performance are to follow.

Since passage of the Clean Air Amendments of 1970, considerable attention has been given to the development of a system for assigning priorities to various source categories. The approach specifies areas of interest by considering the broad strategy of the Agency for implementing the Clean Air Act. Often, these "areas" are actually pollutants emitted by stationary sources. Source categories that emit these pollutants are evaluated and ranked by a process involving such factors as (1) the level of emission control (if any) already required by State regulations, (2) estimated levels of control that might be required from standards of performance for the source category, (3) projections of growth and replacement of existing facilities for the source category, and (4) the estimated incremental amount of air pollution that could be prevented in a preselected future year by standards of performance for the source category. Sources for which new source performance standards were promulgated or under development during 1977, or earlier, were selected on these criteria.

The Act amendments of August 1977 establish specific criteria to be used in determining priorities for all major source categories not yet listed by EPA. These are (1) the quantity of air pollutant emissions that each such category will emit, or will be designed to emit; (2) the extent to which each such pollutant may reasonably be anticipated to endanger public health or welfare; and (3) the mobility and competitive nature of each such category of sources and the consequent need for nationally applicable new source standards of performance.

The Administrator is to promulgate standards for these categories according to the schedule referred to earlier.

In some cases it may not be feasible immediately to develop a standard for a source category with a high priority. This might happen when a program of research is needed to develop control techniques or because techniques for sampling and measuring emissions may require refinement. In the developing of standards, differences in the time required to complete the necessary investigation for different source categories must also be considered. For example, substantially more time may be necessary if numerous pollutants must be investigated from a single source category. Further, even late in the development process the schedule for completion of a standard may change. For example, inablility to obtain emission data from well-controlled sources in time to pursue the development process in a systematic fashion may force a change in scheduling. Nevertheless, priority ranking is, and will continue to be, used to establish the order in which projects are initiated and resources assigned.

After the source category has been chosen, the types of facilities within the source category to which the standard will apply must be determined. A source category may have several facilities that cause air pollution, and emissions from some of these facilities may vary from insignificant to very expensive to control. Economic studies of the source category and of applicable control technology may show that air pollution control is better served by applying standards to the more severe pollution sources. For this reason, and because there is no adequately demonstrated system for controlling emissions from certain facilities, standards often do not apply to all facilities at a source. For the same reasons, the standards may not apply to all air pollutants emitted. Thus, although a source category may be selected to be covered by a standard of performance, not all pollutants or facilities within that source category may be covered by the standards.

2.3 PROCEDURE FOR DEVELOPMENT OF STANDARDS OF PERFORMANCE

Standards of performance must (1) realistically reflect best demonstrated control practice; (2) adequately consider the cost, the non-air quality health and environmental impacts, and the energy requirements of

such control; (3) be applicable to existing sources that are modified or reconstructed as well as new installations; and (4) meet these conditions for all variations of operating conditions being considered anywhere in the country.

The objective of a program for developing standards is to identify the best technological system of continuous emission reduction that has been adequately demonstrated. The standard-setting process involves three principal phases of activity: (1) information gathering, (2) analysis of the information, and (3) development of the standard of performance.

During the information-gathering phase, industries are queried through a telephone survey, letters of inquiry, and plant visits by EPA representatives. Information is also gathered from many other sources, and a literature search is conducted. From the knowledge acquired about the industry, EPA selects certain plants at which emission tests are conducted to provide reliable data that characterize the pollutant emissions from well-controlled existing facilities.

In the second phase of a project, the information about the industry and the pollutants emitted is used in analytical studies. Hypothetical "model plants" are defined to provide a common basis for analysis. The model plant definitions, national pollutant emission data, and existing State regulations governing emissions from the source category are then used in establishing "regulatory alternatives." These regulatory alternatives are essentially different levels of emission control.

EPA conducts studies to determine the impact of each regulatory alternative on the economics of the industry and on the national economy, on the environment, and on energy consumption. From several possibly applicable alternatives, EPA selects the single most plausible regulatory alternative as the basis for a standard of performance for the source category under study.

In the third phase of a project, the selected regulatory alternative is translated into a standard of performance, which, in turn, is written in the form of a Federal regulation. The Federal regulation, when applied to newly constructed plants, will limit emissions to the levels indicated in the selected regulatory alternative.

As early as is practical in each standard-setting project, EPA representatives discuss the possibilities of a standard and the form it might take with members of the National Air Pollution Control Techniques Advisory Committee. Industry representatives and other interested parties also participate in these meetings.

The information acquired in the project is summarized in the Background Information Document (BID). The BID, the standard, and a preamble explaining the standard are widely circulated to the industry being considered for control, environmental groups, other government agencies, and offices within EPA. Through this extensive review process, the points of view of expert reviewers are taken into consideration as changes are made to the documentation.

A "proposal package" is assembled and sent through the offices of EPA Assistant Administrators for concurrence before the proposed standard is officially endorsed by the EPA Administrator. After being approved by the EPA Administrator, the preamble and the proposed regulation are published in the Federal Register.

As a part of the Federal Register announcement of the proposed regulation, the public is invited to participate in the standard-setting process. EPA invites written comments on the proposal and also holds a public hearing to discuss the proposed standard with interested parties. All public comments are summarized and incorporated into a second volume of the BID. All information reviewed and generated in studies in support of the standard of performance is available to the public in a "docket" on file in Washington, D.C.

Comments from the public are evaluated, and the standard of performance may be altered in response to the comments.

The significant comments and EPA's position on the issues raised are included in the "preamble" of a promulgation package, which also contains the draft of the final regulation. The regulation is then subjected to another round of review and refinement until it is approved by the EPA Administrator. After the Administrator signs the regulation, it is published as a "final rule" in the Federal Register.

2.4 CONSIDERATION OF COSTS

Section 317 of the Act requires an economic impact assessment with respect to any standard of performance established under Section 111 of the Act. The assessment is required to contain an analysis of: (1) the costs of compliance with the regulation, including the extent to which the cost of compliance varies depending on the effective date of the regulation and the development of less expensive or more efficient methods of compliance; (2) the potential inflationary or recessionary effects of the regulation; (3) the effects the regulation might have on small business with respect to competition; (4) the effects of the regulation on consumer costs; and (5) the effects of the regulation on energy use. Section 317 also requires that the economic impact assessment be as extensive as practicable.

The economic impact of a proposed standard upon an industry is usually addressed both in absolute terms and in terms of the control costs that would be incurred as a result of compliance with typical, existing State control regulations. An incremental approach is necessary because both new and existing plants would be required to comply with State regulations in the absence of a Federal standard of performance. This approach requires a detailed analysis of the economic impact from the cost differential that would exist between a proposed standard of performance and the typical State standard.

Air pollutant emissions may cause water pollution problems, and captured potential air pollutants may pose a solid waste disposal problem. The total environmental impact of an emission source must, therefore, be analyzed and the costs determined whenever possible.

A thorough study of the profitability and price-setting mechanisms of the industry is essential to the analysis so that an accurate estimate of potential adverse economic impacts can be made for proposed standards. It is also essential to know the capital requirements for pollution control systems already placed on plants so that the additional capital requirements necessitated by these Federal standards can be placed in proper perspective. Finally, it is necessary to assess the availability

of capital to provide the additional control equipment needed to meet the standards of performance.

2.5 CONSIDERATION OF ENVIRONMENTAL IMPACTS

Section 102(2)(C) of the National Environmental Policy Act (NEPA) of 1969 requires Federal agencies to prepare detailed environmental impact statements on proposals for legislation and other major Federal actions significantly affecting the quality of the human environment. The objective of NEPA is to build into the decisionmaking process of Federal agencies a careful consideration of all environmental aspects of proposed actions.

In a number of legal challenges to standards of performance for various industries, the United States Court of Appeals for the District of Columbia Circuit has held that environmental impact statements need not be prepared by the Agency for proposed actions under Section 111 of the Clean Air Act. Essentially, the Court of Appeals has determined that the best system of emission reduction requires the Administrator to take into account counter-productive environmental effects of a proposed standard, as well as economic costs to the industry. On this basis, therefore, the Court established a narrow exemption from NEPA for EPA determination under Section 111.

In addition to these judicial determinations, the Energy Supply and Environmental Coordination Act (ESECA) of 1974 (PL-93-319) specifically exempted proposed actions under the Clean Air Act from NEPA requirements. According to Section 7(c)(1), "No action taken under the Clean Air Act shall be deemed a major Federal action significantly affecting the quality of the human environment within the meaning of the National Environmental Policy Act of 1969." (15 U.S.C. 793(c)(1))

Nevertheless, the Agency has concluded that the preparation of environmental impact statements could have beneficial effects on certain regulatory actions. Consequently, although not legally required to do so by section 102(2)(C) of NEPA, EPA has adopted a policy requiring that environmental impact statements be prepared for various regulatory actions, including standards of performance developed under Section 111 of the

Act. This voluntary preparation of environmental impact statements, however, in no way legally subjects the Agency to NEPA requirements.

To implement this policy, a separate Section in this document is devoted solely to an analysis of the potential environmental impacts associated with the proposed standards. Both adverse and beneficial impacts in such areas as air and water pollution, increased solid waste disposal, and increased energy consumption are discussed.

2.6 IMPACT ON EXISTING SOURCES

Section 111 of the Act defines a new source as ". . . any stationary source, the construction or modification of which is commenced . . ." after the proposed standards are published. An existing source is redefined as a new source if "modified" or "reconstructed" as defined in amendments to the general provisions of Subpart A of 40 CFR Part 60, which were promulgated in the Federal Register on December 16, 1975 (40 FR 58416).

Promulgation of a standard of performance requires States to establish standards of performance for existing sources in the same industry under Section 111 (d) of the Act if the standard for new sources limits emissions of a designated pollutant (i.e., a pollutant for which air quality criteria have not been issued under Section 108 or which has not been listed as a hazardous pollutant under Section 112). If a State does not act, EPA must establish such standards. General provisions outlining procedures for control of existing sources under Section 111(d) were promulgated on November 17, 1975, as Subpart B of 40 CFR Part 60 (40 FR 53340).

2.7 REVISION OF STANDARDS OF PERFORMANCE

Congress was aware that the level of air pollution control achievable by any industry may improve with technological advances. Accordingly, Section 111 of the Act provides that the Administrator ". . . shall, at least every 4 years, review and, if appropriate, revise . . ." the standards. Revisions are made to assure that the standards continue to reflect the best systems that become available in the future. Such revisions will not be retroactive but will apply to stationary sources constructed or modified after the proposal of the revised standards.

3.0 THE ASPHALT ROOFING MANUFACTURING INDUSTRY

3.1 GENERAL

The asphalt roofing and siding manufacturing industry, henceforth called the asphalt roofing industry for simplicity, encompasses ancillary production activities as well as the production of asphalt roofing and siding products. The raw materials used and the processing steps necessary to transform those raw materials into finished products are shown in Figure 3-1.

Cellulose fibers such as those from rags, paper, and wood are processed into a dry felt. Felt can also be made from asbestos. The felt is then saturated and sold as saturated felt, or saturated and coated with asphalt and surfaced with selected mineral aggregates appropriate to the finished product (roll roofing or shingles). A fiber glass mat is sometimes used in place of the dry felt, in which case the asphalt saturation step is bypassed.

Coal tar was used extensively for roofing products at one time, but it has now largely been supplanted by asphalt. One of the few remaining products is a tar-saturated felt used primarily for pipeline wrapping. Tar-saturated felt production is included as a part of the industry because it is processed like asphalt saturated felt.

The saturant and coating asphalts used in the production of asphalt roofing are a processed asphalt flux, which is usually a blend of crude oil residuum from the refining process. Air blown asphalts are also used in the installation of built-up roofs and for the repair of leaky roofs.

Products produced on an asphalt roofing line are: (1) saturated felts; (2) roll roofing and sidings; and (3) roofing and siding shingles. Roofing shingles accounted for about 80 percent of the total tonnage produced in 1978.[1]

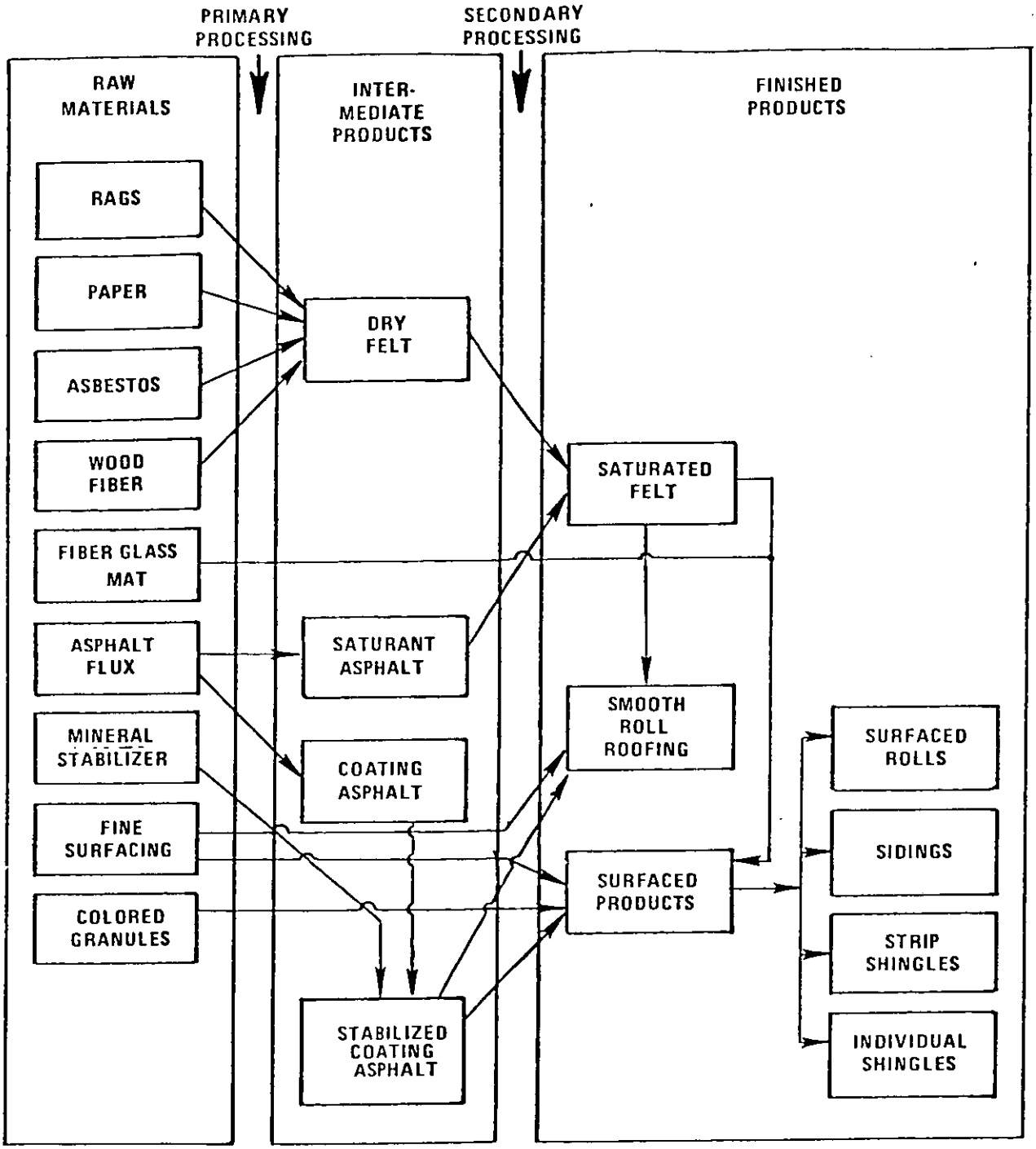

Figure 3-1. Processing chart for asphalt roofing products from raw materials to finished roofing.[2]

Saturated felts, used as underlayment for shingles, for sheathing paper, for laminations in the construction of built-up roofs and for pipe wrapping, consist of a felt impregnated with an asphalt or coal tar saturant.

Roll roofing and shingles are prepared by adding a coating of stabilized asphalt to a felt web which has first been impregnated with a saturant asphalt. Alternatively, a fiber glass mat web is used, in which case the stabilized coating is used both to saturate and to coat the web. To make shingles, mineral granules are added, a strip of sealer asphalt may be applied, and the web is cut into shingles. The most popular shingle is a nominal 106.6 kg (235 lb), 3-tab, self-sealing strip shingle. Self-seal shingles accounted for about 97 percent of all shingle production in 1978.[1]

3.1.1 Processed Asphalt Products

Most of the asphalt produced by, or for, the asphalt roofing industry is used in the manufacture of roofing line products. About 10 percent of the asphalt is used to make insulated sidings. Much of the usefulness and durability of asphalt roofing products can be attributed to the waterproofing characteristics of the asphalt.

The asphalt used for saturants and coatings is prepared by blowing air through a hot asphalt flux to raise the temperature at which it will soften. The stabilized coating asphalt is then prepared by mixing coating asphalt and a mineral stabilizer in approximately equal proportions.

Saturant and coating asphalts are normally classified as intermediate products because they are used in the manufacture of roofing line products. Saturant and coating asphalts are, however, end products for some companies since they are not always produced at roofing plants. Much of the saturant and coating asphalt used by asphalt roofing plants is prepared at refineries or by asphalt processors. Fifty-nine petroleum firms with 106 refineries report a capacity to produce asphalt.[3] There are several small companies which buy asphalt flux to produce saturants and coatings for the asphalt roofing industry.

3.1.2 Market Size and Description

The market for asphalt roofing products is focused on residential construction, with new construction and replacement sharing the resources

attracted to the market. An important feature of the domestic market is its local nature. It is estimated that virtually all of the sales of asphalt roofing and siding products occur within 483 km (300 mi) of the production facility. There are no data available to demonstrate the existence of a foreign market.

Ten major producers dominate the industry in a market with virtually inelastic demand, which would be expected since the substitutes for asphalt roofing are higher priced and constitute about 20 percent of sales. The entire industry can be viewed as a "subset" of a larger industry, that is, housing.

The constituents which traditionally determine market growth are demand, product cost, availability, and competition from market substitutes. Until recently, the asphalt processing and roofing industry differed from the norm in that its only growth determinant was the demand for roofing products. This may change as supply shortages drive prices up, and the search for viable substitutes is intensified.

"Housing starts" and the renovation of existing structures are the two primary determinants of the demand for roofing products, and they have a complementary relationship in that declines in one are associated with increases in the other. When housing starts dropped sharply in 1974, sales volume of roofing and siding material did not decline a corresponding amount because of the strength of the renovation market.

During the past 10 years, the compound annual growth rate of the asphalt roofing products market has been 2.5 percent.[1] Projections of the trend for the next 5-year period suggest continued growth at a rate of 1.5 to 2 percent.[4]

The price and availability of asphalt roofing products is closely intertwined with the cost and availability of the materials used in their manufacture. As noted earlier, these materials are asphalt, felt, and mineral products (granules, parting agents, and stabilizers).

3.1.3 Raw Materials

Asphalt is the most expensive component of asphalt roofing products. About 90 percent of all asphalt used is extracted from crude oil; therefore, the roofing industry is heavily dependent on the petroleum industry. The asphalt derived from crude oil has only one substitute, the "native" or

"natural" asphalt which is mined from fissures or pools close to the earth's surface.

Asphalt is the residual "heavy bottom" of crude petroleum. Prices and availabilities for asphalt are thus directly tied to the price and availability of crude oil. Disruption of asphalt supplies resulting from the interruption of petroleum imports increases prices. The industry expects asphalt shortages to continue.

Felts are produced from sawdust, rags, waste paper, wood fibers, and asbestos. In contrast with the volatile and even dramatic fluctuations of asphalt supplies, the effects of felt supplies on the roofing industry have been steadily unfavorable. The shortage of wood pulp has increased the demand for wastepaper and recycled paper, thus limiting the amount available for lower-priced paper products such as organic felt for roofing products. A fiber-glass-based asphalt shingle is now being manufactured by several roofing manufacturers. At the present time, it accounts for over 5 percent of the sales in a typical market.[5]

Granules, parting agents, and stabilizers for the surfacing of roofing products accounted for about 16 percent of the total cost of materials in 1979.[6] The roofing and siding industry consumes only a small fraction of domestic production, while the supply of basic granule material (primarily sand and gravel) is virtually limitless. Because of other uses for sand and gravel, however, there are some "regional shortages" in urban areas where asphalt roofing and siding manufacturing is primarily located.

3.1.4 Product Substitutes

The substitutes in the market for asphalt roofing, i.e., cedar shingles, slate, tile, and other new materials, have found only limited application in the roofing market in recent years. Increased asphalt roofing prices during the past several years, however, have caused some acceleration in the search for substitutes. In the commercial and industrial built-up roofing market there is some competition from various plastic materials which are lighter and have shorter application times, but these products have made no significant inroads into the residential market.

3.1.5 Industry Size and Growth Rate

The Asphalt Roofing Manufacturers Association (ARMA) furnished a list of 117 asphalt roofing manufacturing plants in the United States compared to 235 listed in the 1977 census of manufacturers under Standard Industrial Classification (SIC) Code 2952 (Asphalt Felts and Coating).[7] The name and location of one asphalt roofing plant, not on the ARMA list, was obtained from a manufacturer of electrostatic precipitators. The information was verified by calling the plant owner. SIC Code 2952 includes firms engaged in the manufacture of products such as roofing cements and coatings, tarpaper and pitch roofing, as well as asphalt roofing and siding. The ARMA list, on the other hand, is restricted to those firms which produce shingles or roll goods as their primary product.

The 118 asphalt roofing and siding manufacturing plants shown in Figure 3-2 are owned by 31 companies and are located in 30 states. Geographical locations are plotted in Figure 3-2. About 35 percent of the plants are concentrated in four states (California, Texas, Illinois, and New Jersey), mostly in urban areas.

The companies which comprise the asphalt roofing and siding industry vary greatly in size and diversity. The larger firms often produce their own felts, about one-third of the companies process their own asphalt, and one firm owns its own refinery for asphalt production. Six firms are publicly held and listed on either the New York, the American, or a regional stock exchange.

Asphalt roofing production and capacity figures are not disclosed by individual firms, but aggregate figures can be compared by region. In 1977 the regional sales of asphalt roofing products totalled 93.9 million squares, and sales were distributed as follows: Northeast region 17.9 percent; North Central region 32.5 percent; South region 34.1 percent; and West region 15.5 percent.[8] Estimates of production at 53 plants showed a range of 7,257 to 408,195 Mg (8,000 to 450,000 tons) per year.

The production of asphalt roofing and siding is so thoroughly interlocked with the production of asphalt that a description of asphalt roofing must include asphalt processing. This interlocked relationship has two major aspects. First, the pronounced dependence of the roofing industry on asphalt as an irreplaceable input links the two industries.

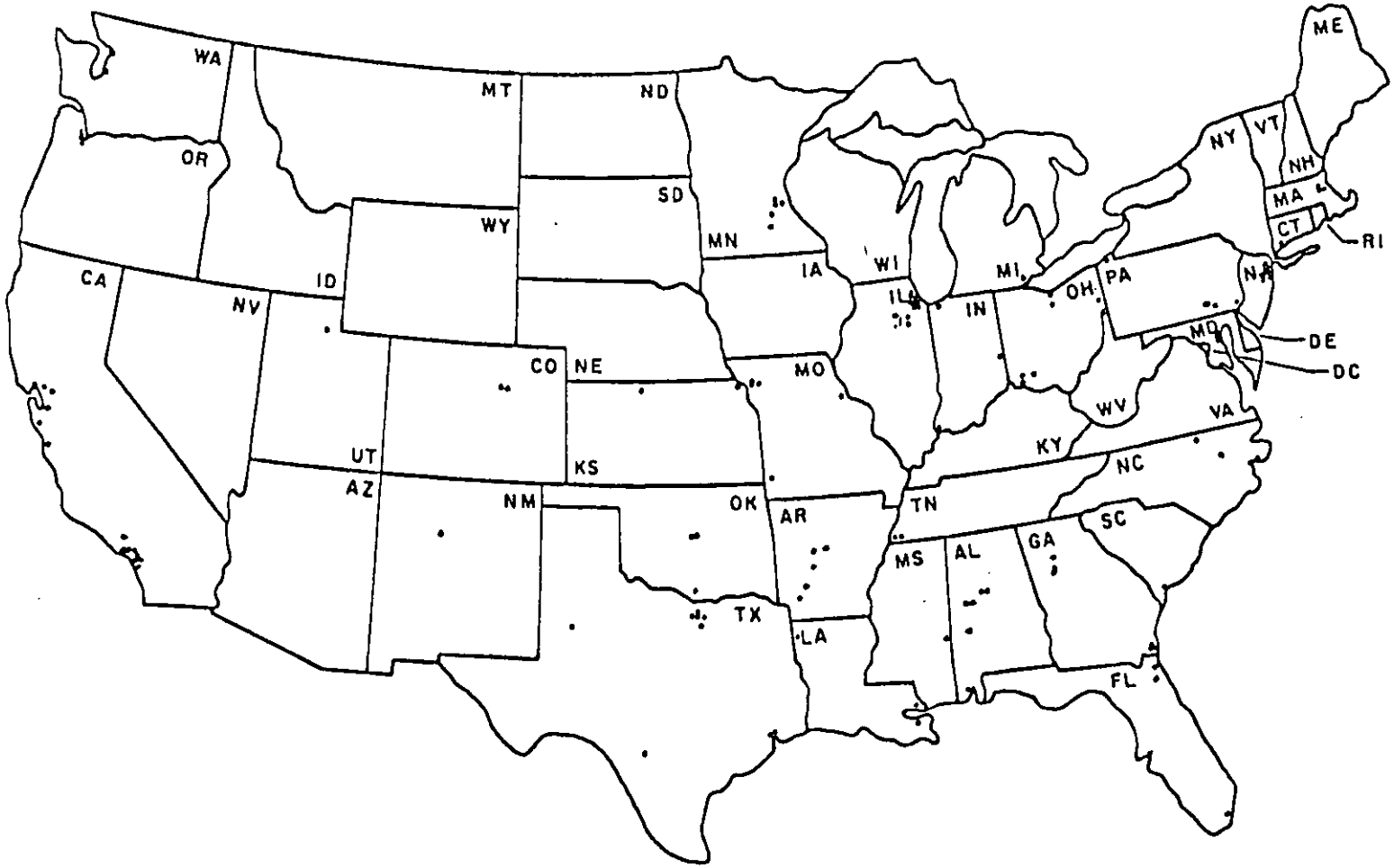

Figure 3-2. Location of asphalt roofing manufacturing facilities within the United States.[7]

Secondly, part of the production process itself, namely oxidizing or "blowing" the asphalt, can be done either at a roofing plant or at a refinery. As a result, regulations for control of asphalt blowing would have economic effects on both industries. It is necessary, therefore, to describe the production of roofing asphalt within the petroleum industry for a complete description of the roofing and siding industry.

The large-scale disruptions in petroleum production and prices make projection of the growth in asphalt production since 1978 almost impossible.[9] Since January 1, 1979, the price of crude oil has increased drastically. Between April 1976 and January 1979, the price of asphalt has increased 27 percent to reflect the rise in crude prices.[10]

3.2 PROCESSES AND THEIR EMISSIONS

3.2.1 Processes

The processes which contribute to emissions from asphalt roofing manufacturing can be placed in three broad categories. These are:

1. the roofing manufacturing line;
2. the delivery, transfer, and storage of materials used in the manufacture of roofing products; and
3. the processing (blowing) of asphalt to place it in a form suitable for use in roofing products.

3.2.1.1 Roofing and Siding Manufacturing Line. The sequence of events in the manufacture of asphalt roofing and siding products is illustrated in the flow diagrams of Figures 3-3 and 3-4 and by the block diagram of Figure 3-5. Figure 3-4 also indicates some of the ancillary activities necessary to the line operation. Each of the line activities is described below.

3.2.1.1.1 Dry looper. A roll of felt is installed on the felt reel and unwound onto the dry floating looper. The dry floating looper provides a reservoir of felt material to match the intermittent operation of the felt roller to the continuous operation of the line. Felt is unwound from the roll at a faster rate than is required by the line, with the excess being stored in the dry looper. The flow of felt to the line is kept constant by raising the top set of rollers and increasing looper capacity. The opposite action occurs when a new roll is being put on the

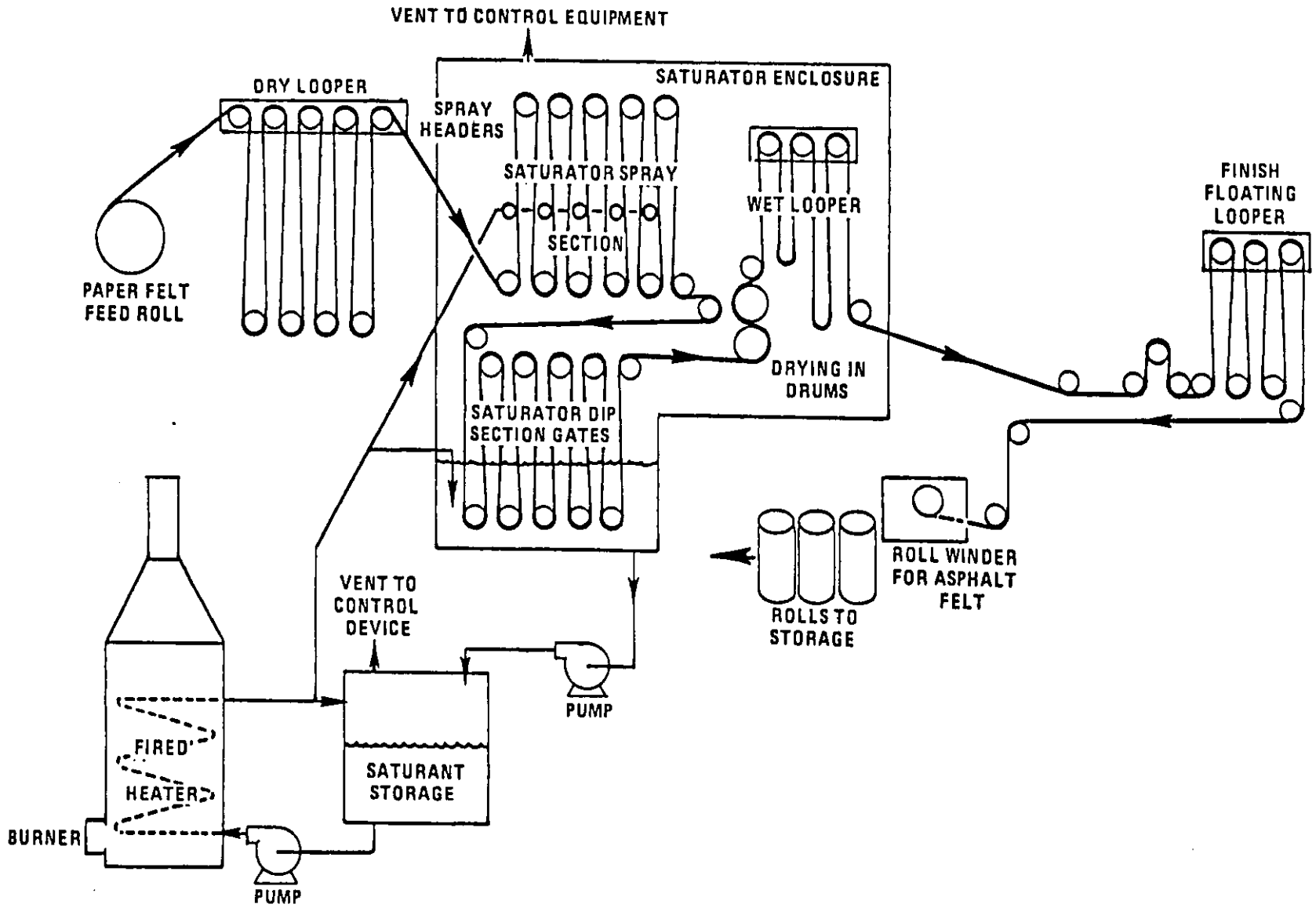

Figure 3-3. Typical flow diagram for production of asphalt-saturated felt.[11]

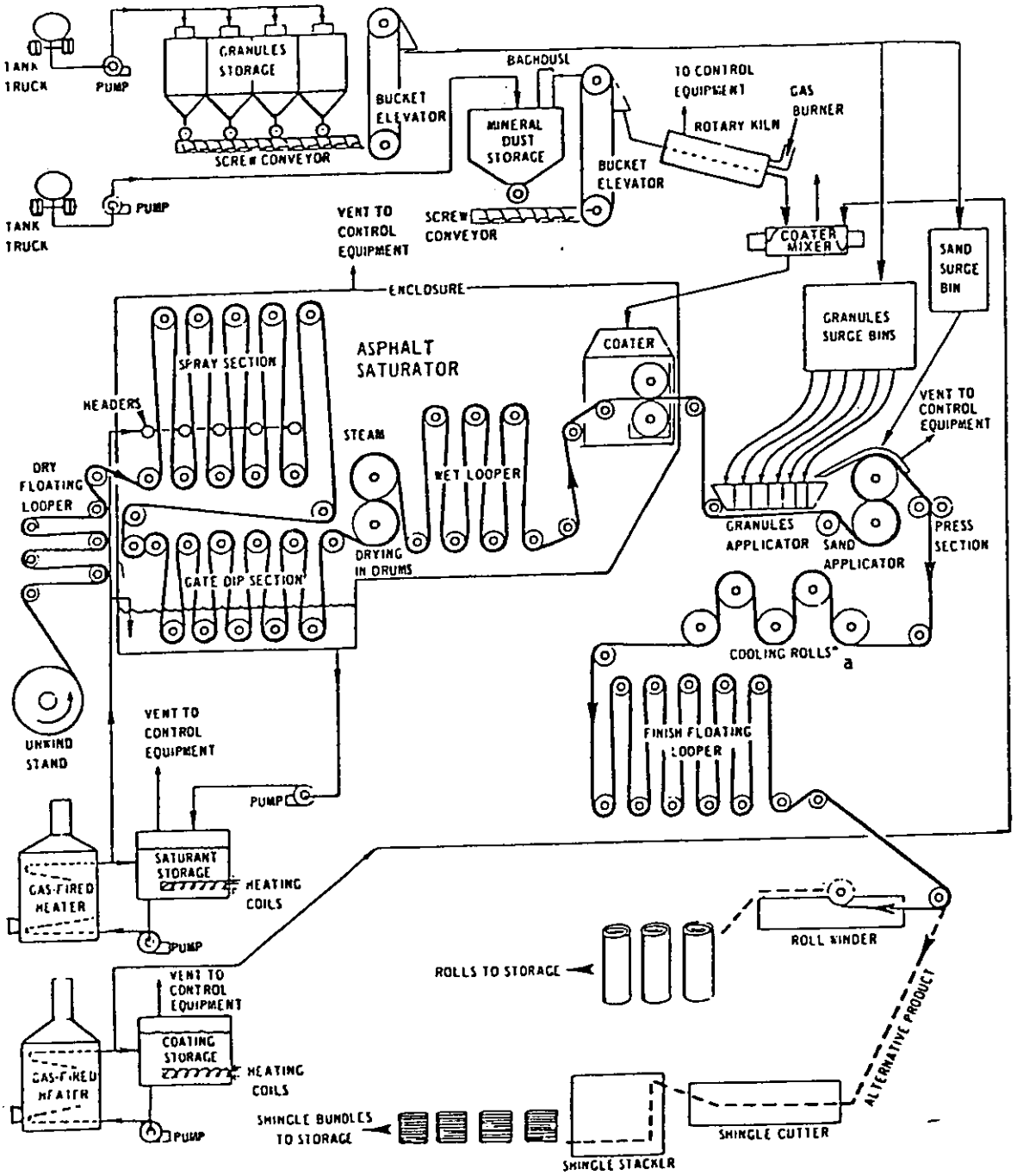

a * WATER SPRAY USED ALSO. THIS IS FOLLOWED BY "SEAL-DOWN" STRIP APPLICATION.

Figure 3-4. Typical flow sheet for manufacturing shingles and rolls.[12]

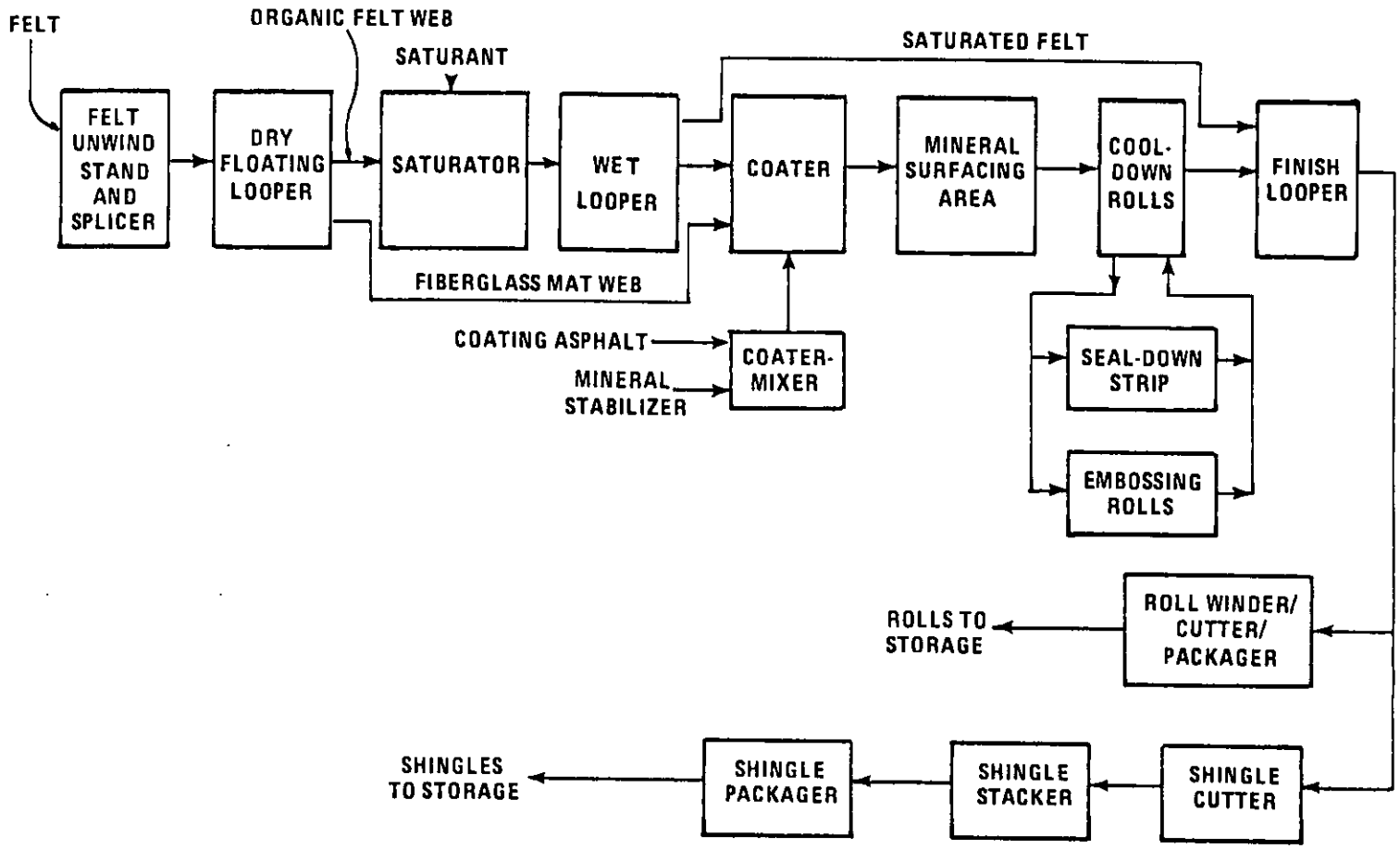

Figure 3-5. Block diagram asphalt roofing line.

felt reel and spliced in, and the felt supply ceases temporarily. There are no significant emissions generated in this processing step.

3.2.1.1.2 Saturator. Following the dry looper, the felt enters the saturator where moisture is driven out and the felt fibers and intervening spaces are filled with "saturant" asphalt. The saturator also contains a looper arrangement which is almost totally submerged in a tank of asphalt maintained at a temperature of 232° to 260°C (450° to 500°F). The asphalt absorbed increases the sheet or web weight by about 150 percent. At some plants the felt is sprayed on one side with asphalt to drive out the moisture prior to dipping. This approach reportedly results in higher emissions than does use of the dip process alone.[13] The saturator is a significant emission source of organic particulate.

3.2.1.1.3 Wet looper. The saturated felt then passes through drying-in drums and onto the wet looper, sometimes called the hot looper. The drying-in drums press surface saturant into the felt. Sometimes additional saturant is also added at this point. The amount of absorption depends on the viscosity of the asphalt and the length of time the asphalt remains fluid. The wet looper increases absorption by providing time for the saturant asphalt to penetrate the felt.

Emissions from the wet looper consist of organic particulate. The wet looper is a significant emission source of organic particulate.

3.2.1.1.4 Coater. If saturated felt is being produced, the sheet bypasses the next two steps (coating and surfacing) and passes directly to the cool-down section. For surfaced roofing products, however, the saturated felt is carried to the coater where a stabilized asphalt coating is applied to both top and bottom surfaces.

Stabilized coating contains a harder, more viscous coating asphalt which has a higher softening point than saturant asphalt and a mineral stabilizer. The coating asphalt and mineral stabilizer are mixed in approximately equal proportions. The mineral stabilizer may consist of finely divided lime, silica, slate dust, dolomite, or other mineral materials. The softening point of saturant asphalts varies from 40° to 74°C (104° to 165°F) whereas the softening point of coating asphalt varies from 99° to 116°C (210° to 240°F).

The weight of the finished product is controlled by the amount of coating used. The coater rollers can be moved closer together to reduce the amount of coating applied to the felt, or separated to increase it. Many modern plants are equipped with automatic scales which weigh the sheets in the process of manufacture and warn the coater operator when the product is running under or over specifications.

The coater is a significant emissions source, releasing asphalt fumes containing organic particulate.

3.2.1.1.5 Coater-mixer. The function of the coater-mixer, which is usually positioned over the line at the coater, is to mix coating asphalt and a mineral stabilizer in approximately equal proportions. The stabilized asphalt is then piped down to the coating pan. The asphalt is piped in at about 232° to 260°C (450° to 500°F), and the mineral stabilizer is delivered by screw conveyor. There is often a preheater immediately ahead of the coater-mixer to dry and preheat the material before it is fed into the coater-mixer. This eliminates moisture problems and also helps to maintain the temperature above 160°C (320°F) in the coater-mixer. The emissions from the preheater are vented to a baghouse at some plants. The coater-mixer is usually covered or enclosed, with an exhaust pipe for the air displaced by (or carried with) the incoming materials.

Emissions from the coater-mixer include both organic and inorganic particulate, but are expected to be primarily inorganic. The emissions from the coater-mixer are not as significant as the emissions from the saturator and coater.

3.2.1.1.6 Mineral surfacing. The next step in the production of coated roofing products is the application of mineral surfacing. The surfacing section of the roofing line usually consists of a multi-compartmented granule hopper, two parting agent hoppers, and two large press rollers (see Figure 3-6). The hoppers are fed through flexible hoses from one or more machine bins above the line. These machine bins provide temporary storage and are sometimes called surge bins. The granule hopper drops colored granules from its various compartments onto the top surface of the moving sheet of coated felt in the sequence necessary to produce the desired color pattern on the roofing. This step is bypassed for smooth-surfaced products. Potential emission sources are the machine bin, the granule

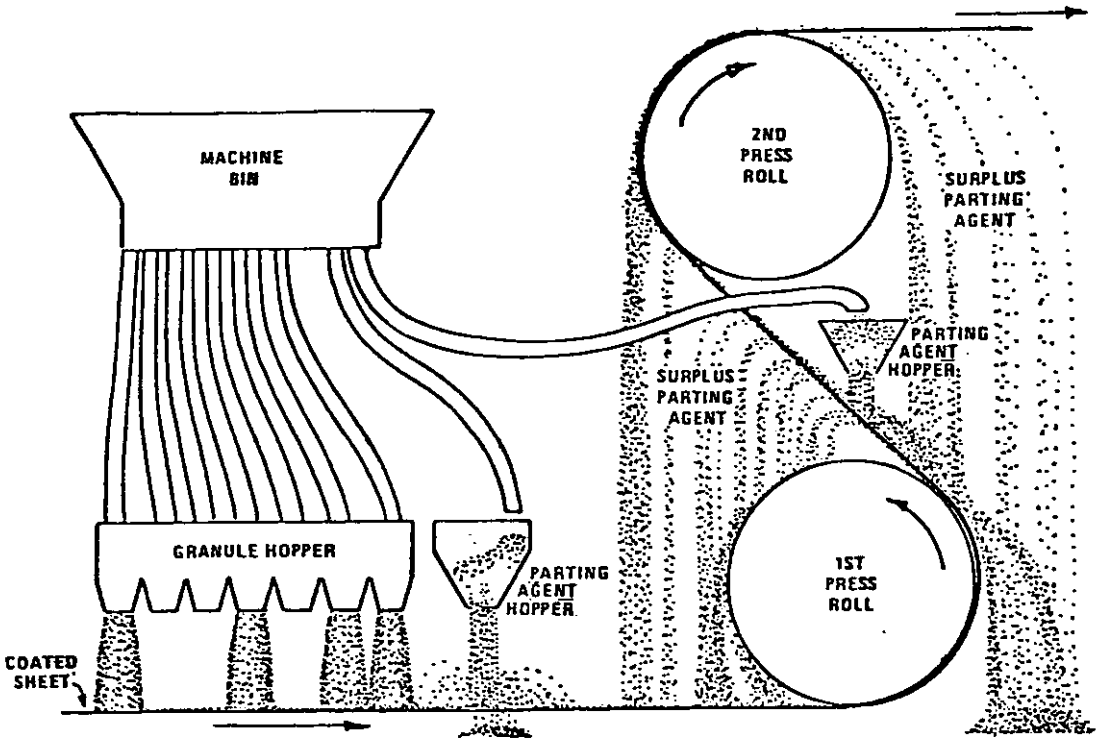

Figure 3-6. Surfacing section of typical asphalt roofing manufacturing line.

hopper, and the hopper/sheet interface. At those plants visited, emissions from the granule surfacing operation appeared to be minimal, even though no attempt was made at control. Granules are usually dyed or oiled, which could account for the low level of observed emissions.

Parting agents such as talc and sand (or some combination thereof) are applied to the top and back surfaces of the coated sheet from parting agent hoppers. These hoppers are usually of an open-topped, slot-type design, slightly longer than the sheet is wide, with a screw arrangement for distributing the parting agent uniformly throughout its length. The first hopper is positioned between the granule hopper and the first large press roller, and 0.2 to 0.3 m (8 to 12 in.) above the sheet. It drops a generous amount of parting agent onto the top surface of the coated sheet and slightly over each edge. Collectors are often placed at the edges of the sheet to pick up this overspray, which is then recycled to the parting agent machine bin by open screw conveyor and bucket elevator. Emission sources are the machine bin (which is usually covered), the open hopper, the hopper/sheet interface, and the roofing sheet. The last two sources are the most significant. If excess material is recycled, the equipment involved (screw conveyor, bucket elevator, etc.) is also a potential emission source. The second parting agent hopper is located between the rollers and dusts the back side of the sheet and is usually identical to the top side hopper with similar emission sources. Because of the steep angle of the sheet at this point, the average fall distance from the hopper to the sheet is usually somewhat greater than on the top side, and more of the material falls off the sheet.

Talc or sand is usually applied to both sides when smooth roll roofing is being made. When manufacturing mineral-surfaced products, granules of the proper color combinations are added as described above from hoppers and the back is coated with talc or sand. Consequently, in the manufacture of mineral-surfaced products, the coating of the back side with the finely divided talc or sand would be a greater source of dust than that from mineral surfacing.

Another method sometimes used to apply backing agent to the back side of the sheet is shown in Figure 3-7. In this technique, a hinged trough holds the backing material against the sheet, which picks up only

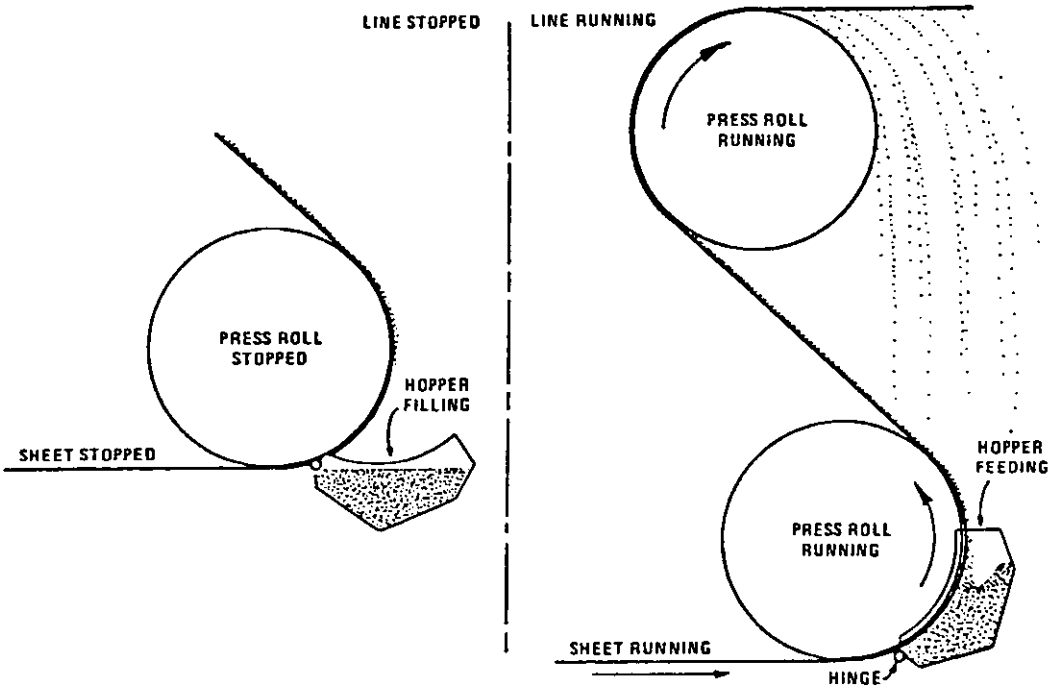

Figure 3-7. Alternative method for applying parting agent.

what will stick to it. When the line is not operating, the trough is tipped back so that no parting agent will escape past its lower lip. Emissions observed when this application technique is used appear to be considerably lower in magnitude than with the gravity dusting technique.

3.2.1.1.7 Product cooling and seal-down strip application. Immediately after application of the surfacing material, the sheet passes through a cool-down section. Here the sheet is cooled rapidly by passing it around water-cooled rollers in an abbreviated looper arrangement. Usually, water is also sprayed on the surfaces of the sheet to speed this cooling process. Emissions from this section were not measured in this program but, where water sprays are used, are expected to be mostly water vapor with some mineral particulate. These emissions are usually expelled to the atmosphere with the aid of large, wall- or roof-mounted fans.

The asphalt seal-down strip is usually applied to the self-sealing coated roofings in this section by a roller partially submerged in a pan of hot sealant asphalt. This pan is usually covered and fugitive emissions appeared to be minimal at the plants surveyed. Some products are also texturized at this point by passing the sheet over an embossing roll which forms a pattern in the surface of the sheet.

3.2.1.1.8 Finish or cooling looper. The cooling process is completed in the next section, the finish (or cooling) looper. The purpose of this section is twofold; first, it allows the product to cool and dry off gradually, and, secondly, the finish looper provides line storage to match the continuous operation of the line to the intermittent operation of the roll winder. It also allows time for quick repairs or adjustments to the shingle cutter and stacker during continuous line operation or, conversely, allows cutting and packaging to continue when the line is down for repair. Usually this section is enclosed to keep the final cooling process from progressing too rapidly. Sometimes, in cold weather, heated air is also used to retard cooling. The sheet is relatively cool at this point; therefore, emissions are not expected to be significant.

3.2.1.1.9 Cutting and packaging. Sheet destined for roll goods is wound on a mandrel, cut to the proper length, and packaged. When shingles

are being made, the material from the finish looper is fed into the shingle cutting machine. After the shingles have been cut, they are moved by roller conveyor to automatic packaging equipment or, in some plants, are manually packaged. They are then stacked on pallets and transferred by fork lift to storage areas or waiting trucks. Emissions from the cutting and packaging operations were not measured but are not expected to be significant.

3.2.1.1.10 Process variations. There are exceptions to the above process procedures. For example:

1. When fiber glass is used for the web instead of felt, the saturating and drying-in operations are bypassed. (These steps are superfluous because the porous construction of the fiber glass mat permits it to be completely permeated by the filled coating asphalt.)

2. The coating and surfacing step is bypassed for saturated felt.

3. No seal-down strip is applied for standard shingles or for roll goods.

4. Additional steps, which may be conducted off-line, are required for some specialty shingles.

3.2.1.2 Materials Delivery, Transfer, and Storage

3.2.1.2.1 Asphalt supply. The asphaltic material used to make roofing grades of asphalt known as "saturant" and "coating asphalt" is obtained from the petroleum industry. It is a product of the fractional distillation of crude oil that occurs toward the end of the distilling process and is commonly known as asphalt flux. Asphalt flux is sometimes blown by the oil refiner or asphalt processor to meet the roofing manufacturer's specifications. Many roofing manufacturers, however, purchase the flux and carry out their own blowing.

Asphalt fumes, composed of gaseous HC and organic particulate, can be released during asphalt transfer and storage.

Asphalt is normally delivered to the asphalt roofing plant in bulk by pipeline, tanker truck, or railcar. Bulk asphalts are delivered in liquid form at temperatures of 93° to 204°C (200° to 400°F), depending on the type of asphalt and local practice. Coating asphalts, however, can also be delivered in solid form.

Several tanker unloading techniques are used. The most common method is to couple a flexible pipe to the tanker and pump the asphalt directly into the appropriate storage tanks (see Figure 3-8). The tanker cover is partially open during the transfer. Since this is a closed system, the only potential sources of emissions are the tanker and the storage tanks. The magnitude of the emissions from the tanker is at least partially dependent on how far the cover is opened. Another unloading procedure, of which there are numerous variations, is to pump the hot asphalt into a large open funnel which is connected to a surge tank (see Figure 3-8). From there, asphalt is pumped into storage tanks. Emission sources are the tanker, the interface between the tanker and the surge tank, the surge tank, and the storage tanks. The emissions from these sources are organic particulate. The quantity of emissions depends on the asphalt temperature and on the asphalt characteristics.

Asphalt flux is usually stored at 51° to 79°C (124° to 174°F), although storage temperatures of up to 232°C (450°F) have been noted. The temperature is usually maintained with steam coils in the tanks at the lower temperatures. [Oil- or gas-fired preheaters are used to maintain the asphalt flux at temperatures above 93°C (200°F).]

Saturant and coating asphalt are normally stored at 204° to 260°C (400° to 500°F). Temperatures are maintained by heating the tanks directly or by cycling the asphalt through external heat exchangers, usually of the closed tube type.

Asphalt is transferred within the plant by closed pipeline. Barring leaks, the only potential emission sources are the end-points. These end-points are the storage tanks, the asphalt heaters (if not the closed tube type), the blowing stills, the coater-mixers, and the saturator and coater pans (see Figure 3-9).

Coating asphalt delivered in solid form is stored in open-ended cardboard tubes or metal cans until needed for use. The quantity of emissions (outgassing), if any, depends on ambient temperature and on the asphalt characteristics. Coating asphalt received in solid form must be melted and heated to operating temperature prior to transfer. This is usually accomplished in open kettles which discharge fumes into the building. Remelted filled coating asphalt is piped directly from the

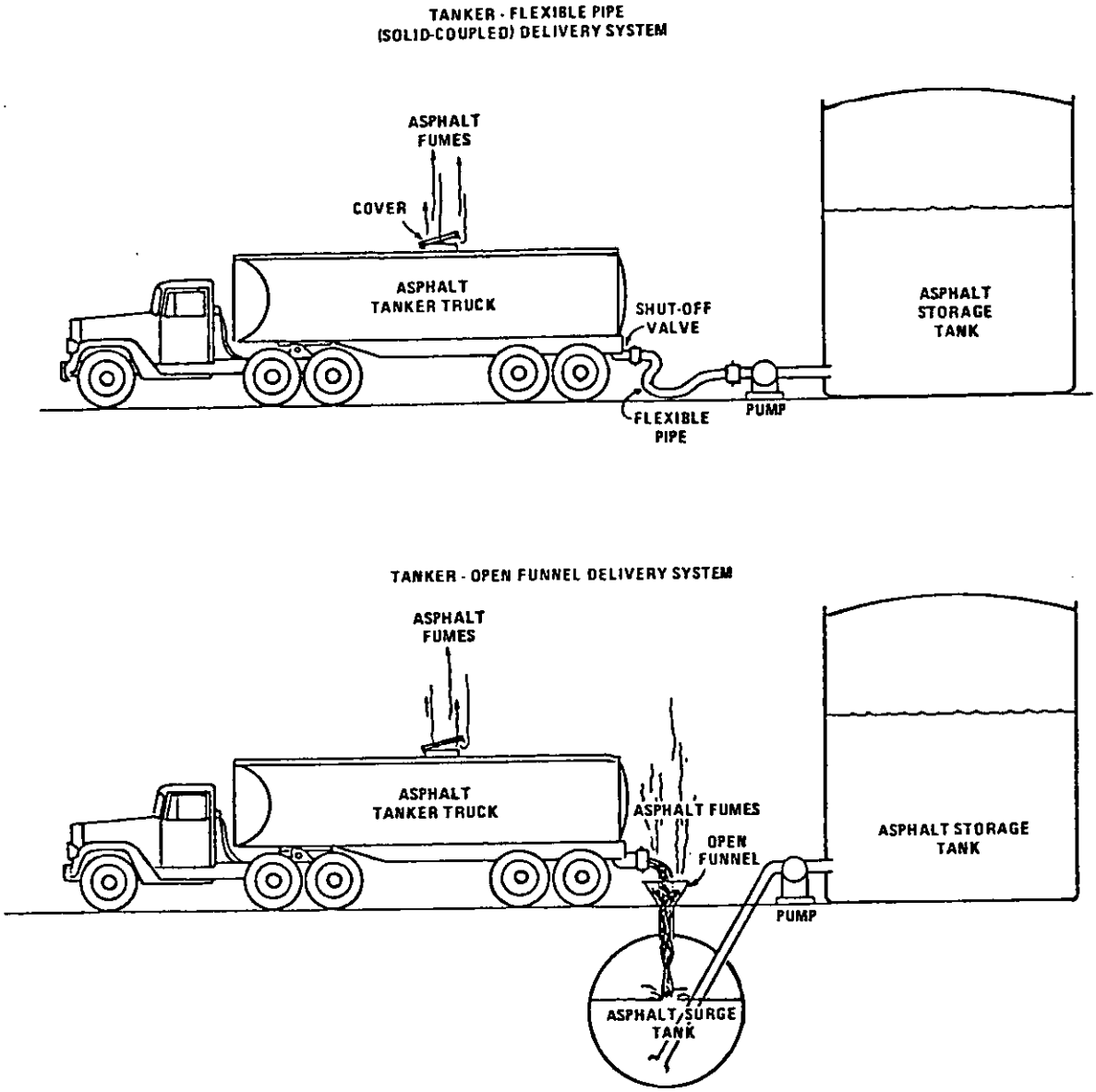

Figure 3-8. Asphalt delivery systems.

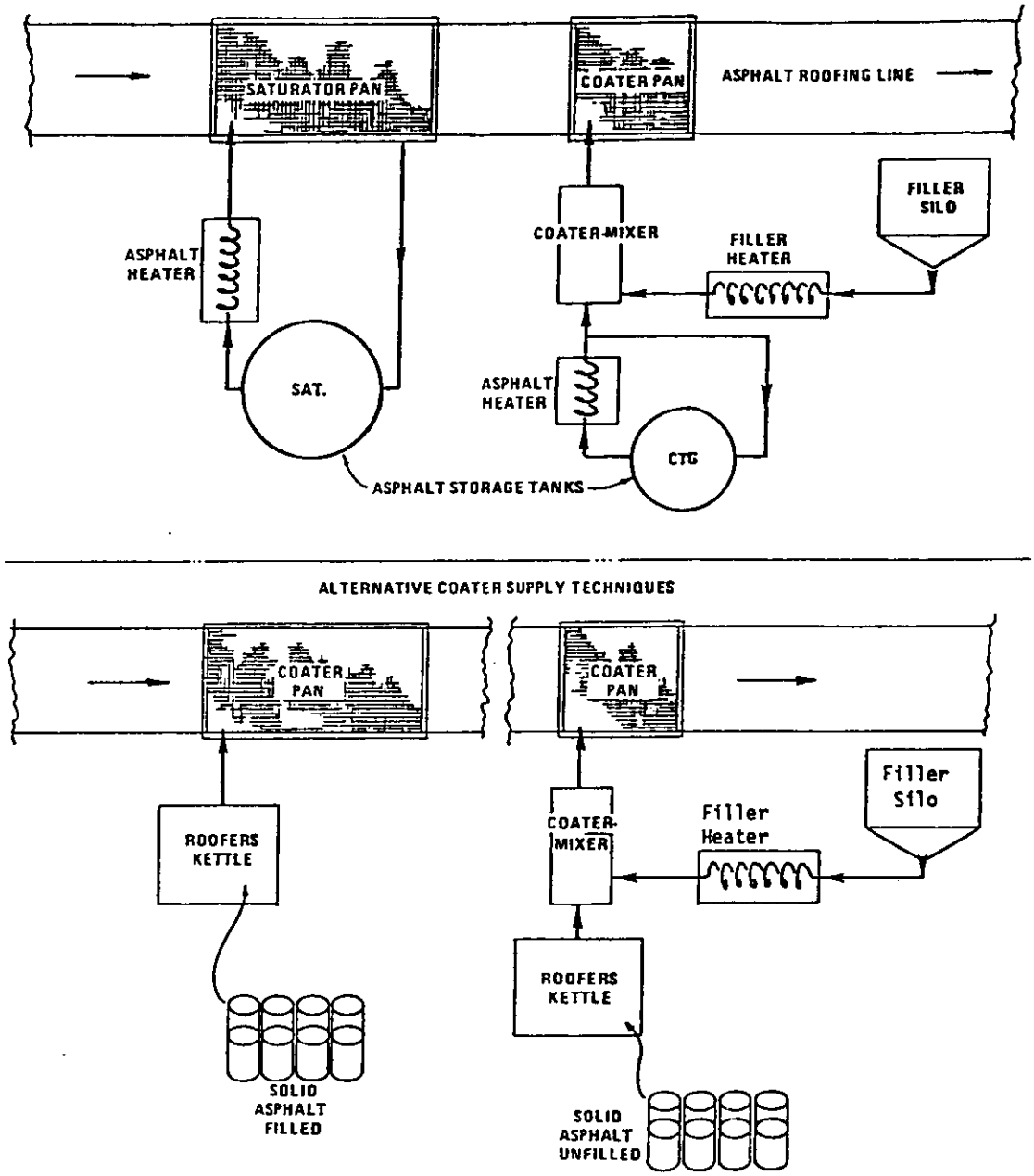

Figure 3-9. In-plant asphalt transfers.

kettle to the coater pan while unfilled coating asphalt is transferred to the coater-mixer and then to the coater pan. For filled asphalt, the emission sources are the kettle and the coater pan. For unfilled asphalt, there is one additional emission source, the coater-mixer.

In the case of asphalt prepared for shipment elsewhere, emission sources vary with the type of product and the manner of shipment. As with in-plant transfers, potential sources of emissions are from end-points of pipeline transfers of flux, saturant, and unfilled coating asphalt. These are the sending and receiving storage tanks. Tanker trucks and railcars are loaded by direct coupling to the transfer tanks and loaded with the tanker manhole covers open. Emission sources are the transfer tanks and the tanker. The methods used for preparing solid asphalt and asphalt emulsions for delivery are not included in this program.

3.2.1.2.2 Mineral products supply. The supply of mineral products to the surfacing area of the roofing line and to the coater-mixer involves the unloading, storage, and transfer of the following products:

1. granules;
2. parting agent (talc or sand); and
3. mineral stabilizer (limestone, traprock, dolomite, slate).

Granules are generally procured in an oiled or coated (painted or dyed) state and are essentially dust-free. Granule sizes vary, depending on the product being produced, but a typical specification allows only 2 percent to be smaller than 420 μm.[14]

Sand is a sharp silica or similar fine material which is normally procured free of dirt, loam, and other foreign material. A typical specification requires that 100 percent pass through a U.S. Standard No. 8 screen (230 μm),* 20 to 40 percent pass through a No. 100 screen (149 μm), and 0 to 5 percent pass through a No. 200 screen (74 μm).[14]

Talc can be micaceous or foliated and is generally purchased free of dirt and any foreign material. The average particle size is quite small,

---

*The number in parentheses indicates the size of the openings in the screen; in this case, 230 μm.

with a typical specification requiring that 30 to 36 percent pass through a 200-mesh (74-μm) screen.[15]

Mineral stabilizer is a fine, inorganic material such as dolomite, micaceous materials, slate, limestone, or trap rock. It can also be a mixture of several of these materials since material captured in baghouses is recycled at many plants for use as stabilizer. One specification requires that at least 60 percent of the mineral stabilizer pass through a 200-mesh (74-μm) screen.[14]

3.2.1.2.3 Unloading and storage. Rock granules are normally delivered in bulk by hopper railcar or truck and dumped onto an underground belt conveyor (see Figure 3-10). They are then transported by bucket elevator, belt conveyor, or gravity feed pipe to the appropriate silo or storage bin. Potential sources of fugitive emissions are the vehicle hopper/conveyor bin interface, any above-ground belt conveyors, all material transfer points, and the silos or storage bins if not covered. The underground conveyors, being fully enclosed, are not emission sources. Most plants do not enclose or ventilate these sources to control emissions. If granules are procured and maintained dust-free, emissions should be minimal during these operations.

Granules are unloaded pneumatically at some plants (see Figure 3-11). In this technique, material is transported from the truck (or railcar) to the silo while it is entrained in a column of air. Both negative and positive pressure systems are used, although the positive pressure system is more common. Pneumatic transfer can generate more dust from the granules. However, since it is a closed system, the only source of fugitive emissions is the discharge into the silo. Some rarely used specialty granules are delivered in bags rather than in bulk. The bags are stacked on pallets for delivery, transfer, and storage and pose no emission problems unless a bag is improperly closed or is broken.

Sand is usually shipped in bulk and handled in the same manner as granules. (See Figures 3-10 and 3-11.) Because of the generally smaller grain size, the transfer of sand can generate more emissions than the transfer of granules.

Talc is delivered in bags or in bulk. Bulk delivery is more common and is usually by hopper railcars or trucks. Talc may be transferred

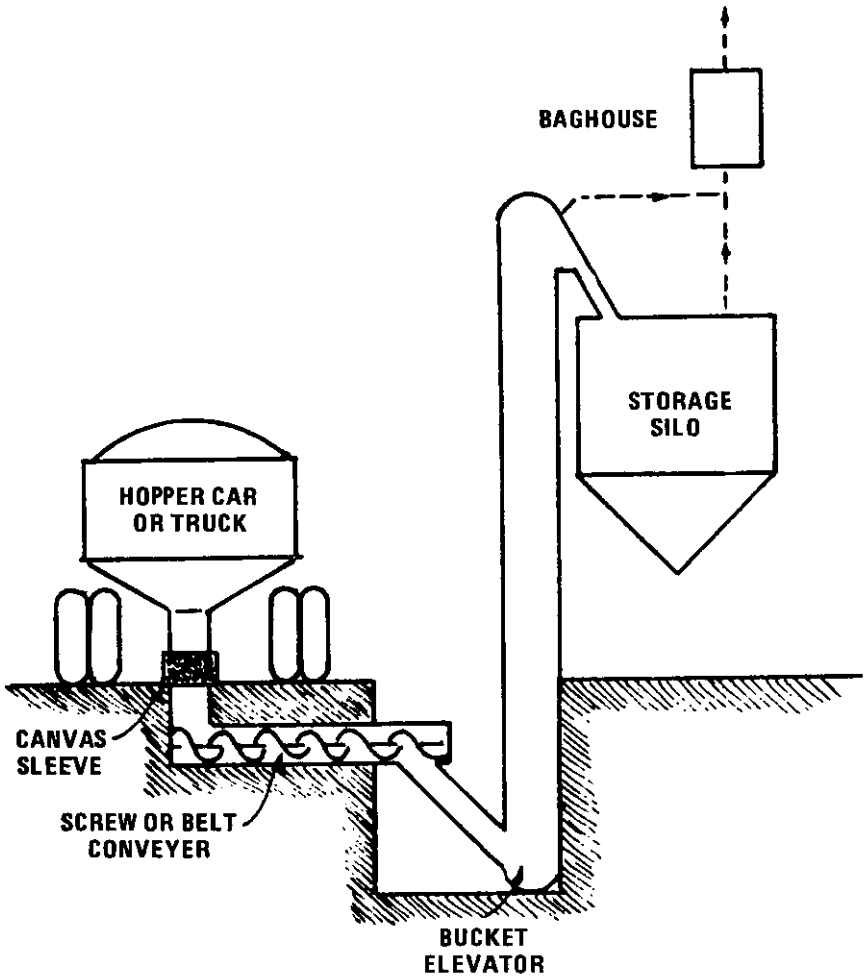

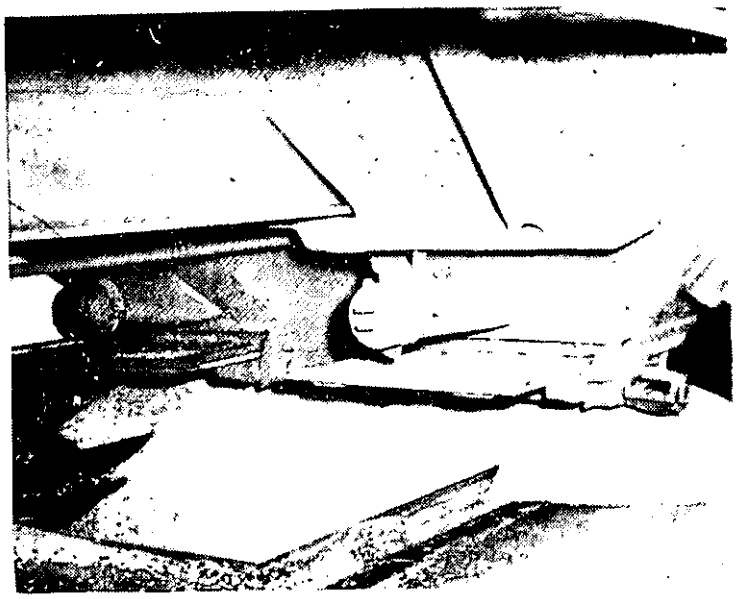

HOPPER BOTTOM RAILROAD CAR UNLOADING GRAIN INTO A SHALLOW HOPPER BY THE CHOKED-FEED METHOD (KOPPEL BULK TERMINAL, LONG BEACH, CALIFORNIA).

Figure 3-10. Mineral products delivery.[16]

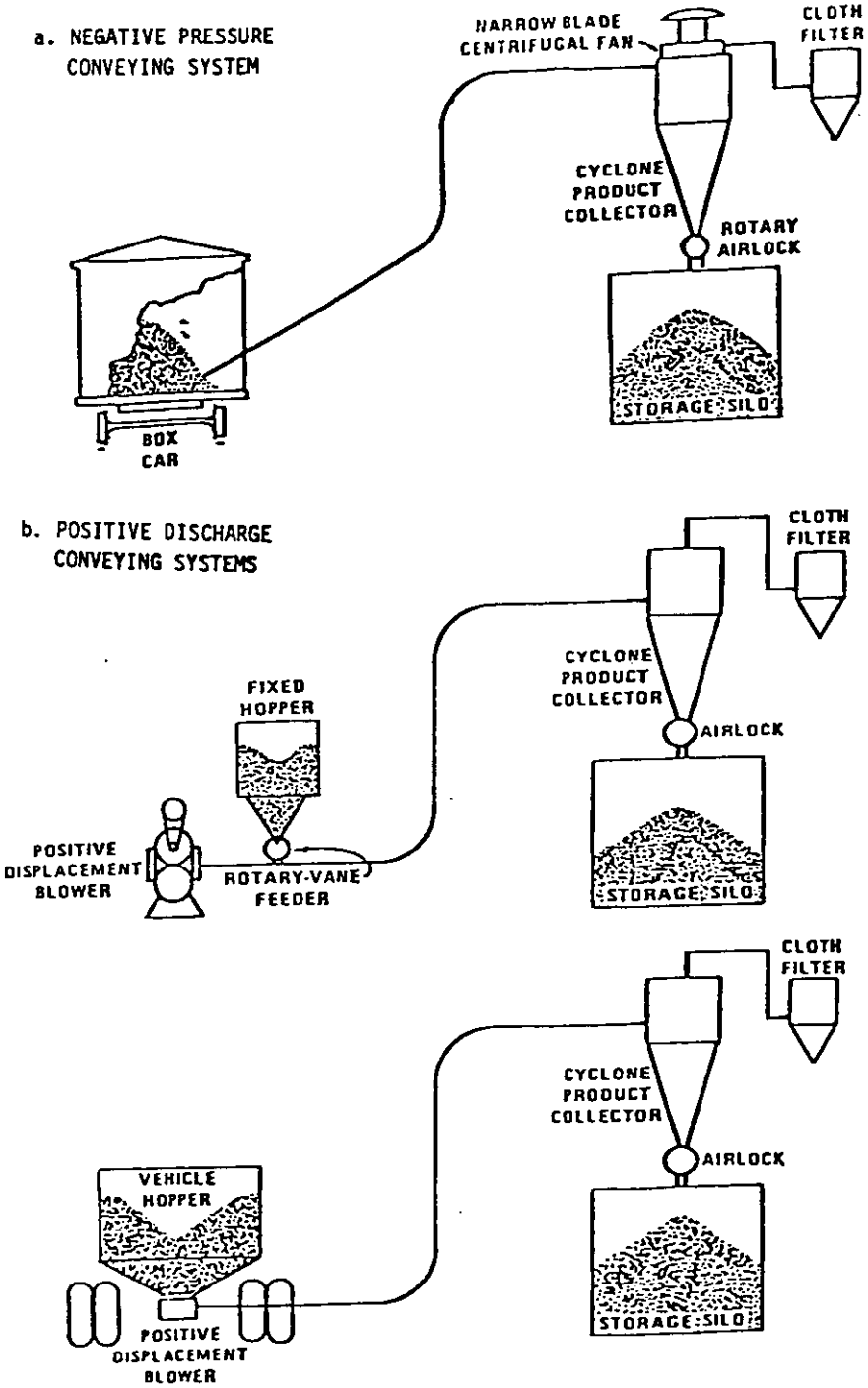

Figure 3-11. Pneumatic conveying systems.[17]

pneumatically to the storage silo, usually with a positive pressure system (see Figure 3-11). A screw conveyor may be used to transfer the talc from the trucks to storage. The silo is usually enclosed and vented to a fabric filter. Another common approach is to dump the talc from the vehicle hopper onto an underground belt or screw conveyor through a sleeve connecting the vehicle hopper and the conveyor hopper (see Figure 3-10). The material is then transferred to a bucket elevator, raised to the top of the silo, and piped by gravity feed or airslide into a covered silo. Fugitive emission sources are the sleeve interfaces with the hopper and conveyor bin, any open portions of the conveyor system, and material transfer points. The only other emission source is the exhaust from the talc silo. Bagged material is delivered on pallets, usually by boxcar. The loaded pallets are transferred by fork lift to storage areas. Fugitive emission sources are torn, broken, or inadequately sealed bags.

Mineral stabilizer is delivered in bulk and transferred in the same manner as talc, often by the same conveying equipment. Emission sources are the same as those for talc.

3.2.1.2.4 <u>In-plant transfers and temporary storage</u>. The movements of asphalt and mineral products in a roofing plant are illustrated in the simplified block diagram of Figure 3-12. The techniques used to accomplish these transfers are reviewed in the following paragraphs.

Asphalts are transferred from one point to another in the roofing plant by pipeline; therefore, the only sources of emissions are the end points (flux tanks, in-process tanks, asphalt heaters, saturator pan, coater-mixer, coater, etc.) which are discussed elsewhere.

Granules are sometimes transferred from storage bins to bucket elevator hoppers with shovels or a front-end loader. When specialty granules are received and stored in bags, the bags are emptied into the bucket elevator hopper (see Figure 3-13). A much more common technique, however, is to use a belt conveyor to load the bucket elevator. Granules are dumped onto the conveyor belt by gravity, raised by bucket elevator, and fed by gravity through flexible pipes into machine bins. Machine bins, located over the roofing line (or machine), provide temporary storage for the particular granule colors needed for the roofing product

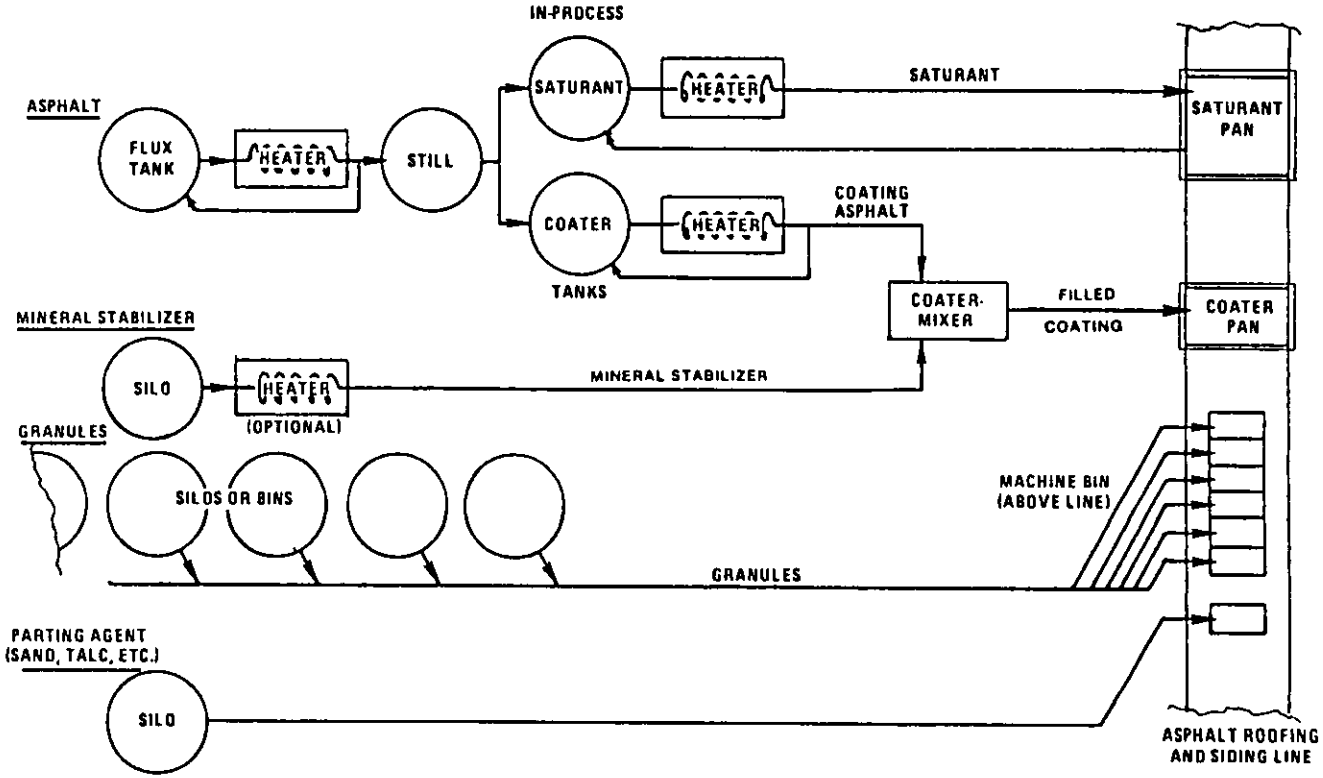

Figure 3-12. Block diagram of in-plant transfers and temporary storage.

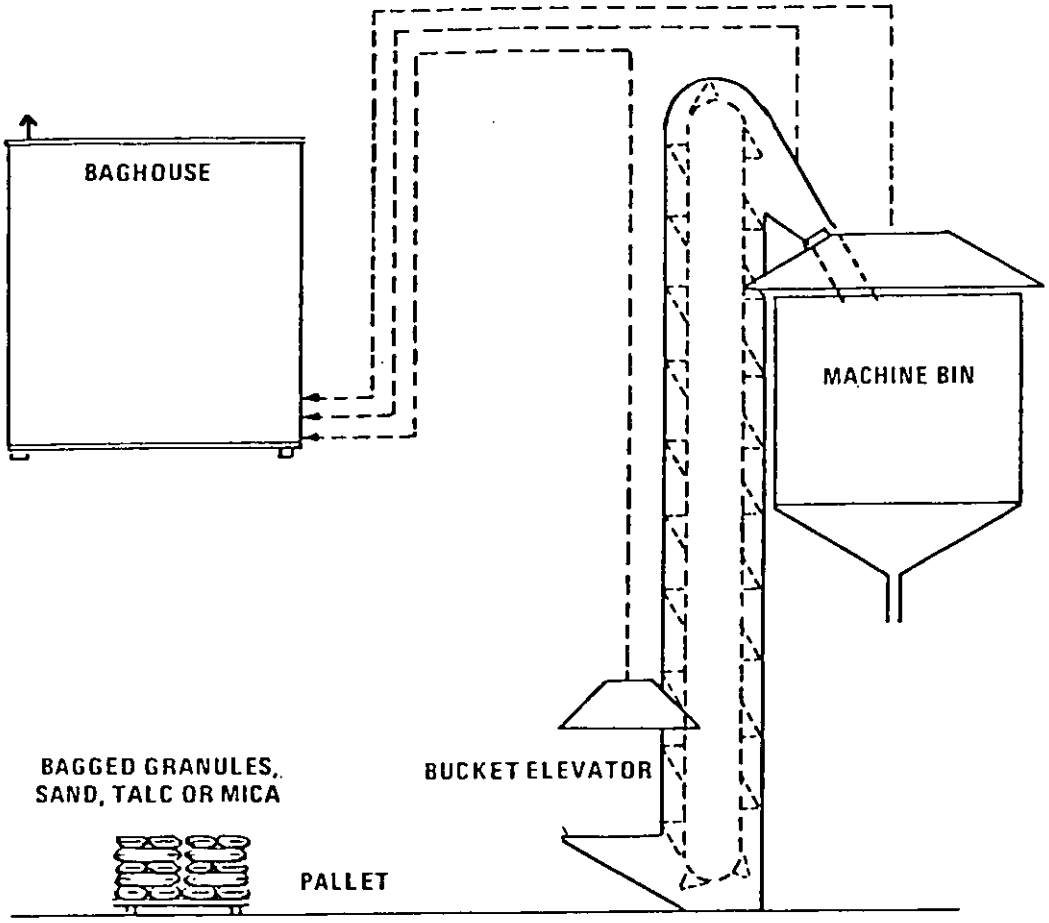

Figure 3-13. In-plant transfer of bagged mineral products.

being manufactured. Some compartments of the machine bin are also used for the parting agent (usually talc). The potential emission sources are the silo/bin unloading point, the conveying system, the bucket elevator hopper, the bucket elevator, and the machine bins. Fugitive emissions from these sources should be minor if the granules are procured oiled (or dyed) and dust-free.

In-plant transfers of sand, sometimes used as a parting agent, are usually conducted in the same manner as granules. The potential emission sources are also the same, but the magnitude of the emissions will probably be higher as a consequence of the generally smaller grain size of the sand.

Talc, the most commonly used parting agent, may also be transferred within the plant by open belt conveyor and bucket elevator. A more usual approach, however, is the use of gravity, air slides, screw conveyors, and sometimes bucket elevators. Another approach, not yet very common for in-plant transfers, is pneumatic conveying. When talc is received and stored in bags, the bags are emptied into a bucket elevator hopper (see Figure 3-13). Potential emission sources and emissions depend on the transfer system used. When bagged talc is used, both the dumping process and the empty bags are potential emission sources. Other potential emission sources are the belt conveyor, the bucket elevator, and the machine bin. With pneumatic transfer, air slides, and screw conveyors, the only potential sources of emissions are the silo, the machine bin, and (with positive-pressure systems) line leaks.

Mineral stabilizer can be transported using the same techniques as used with talc. However, like talc, mineral stabilizer is more commonly moved by gravity, air slides, screw conveyors, and sometimes bucket elevators. With a gravity feed system, fugitive emission sources are line leaks and any open transfer points. Bucket elevators and their transfer points are sources of fugitive emissions, as are the storage silo and the coater-mixer. These are discussed elsewhere in this chapter. Air slides and screw conveyors are closed systems and are not, of themselves, emission sources.

3.2.1.2.5 Asphalt processing. Asphalt flux is the bottoms from the petroleum refining process. It can consist of the residuums from a

single crude or from a blend of many crudes. A number of products are produced for the asphalt roofing industry, as detailed in Section 3.1. The principal products, however, are the "saturant" asphalt and "coating" asphalt used in the production of asphalt roofing and siding. One difference between these two asphalts is their softening point. Saturants usually have a softening point between 40° and 74°C (104° and 165°F), while coating asphalts soften at about 110°C (230°F). In addition, flexibility at lower temperatures and penetration into the web are important parameters.

Asphalt is blown with air in asphalt blowing stills (see Figure 3-14). A blowing still is a tank fitted near its base with a sparger (air lines in a spider arrangement). The purpose of the sparger is to increase contact between the air and the asphalt. Air is forced through holes in the sparger into a tank of hot [204° to 243°C (400° to 470°F)] asphalt flux. This air rises through the asphalt, participating in an exothermic oxidation reaction. Oxidizing the asphalt has the effect of raising its softening temperature, reducing penetration, and modifying other characteristics. Sometimes catalysts are added to assist in this transformation.[18] The time required for air blowing of asphalt depends on a number of factors. These factors include the characteristics of the asphalt flux, the characteristics desired for the finished product, the reaction temperature, the type of still used, the air injection rate, and the efficiency with which the air entering the still is dispersed throughout the asphalt. Blowing times may vary in duration from 30 minutes to 12 hours.

Asphalt flux characteristics depend on the source of the crude and the method used to refine it. The type of flux used will vary from plant to plant but should stay fairly constant at any one plant. The softening point of the principal products of the blowing process (saturant and coating asphalts) varies from one location to another.

Asphalt blowing is a highly temperature-dependent process, as the rate of oxidation increases rapidly with increases in temperature.[18] Asphalt is preheated to 204° to 243°C (400° to 470°F) before blowing is initiated to assure that the oxidation process will start at an acceptable rate. Conversion does take place at lower temperatures but is much slower.[18] Due to the exothermic nature of the reaction, the asphalt

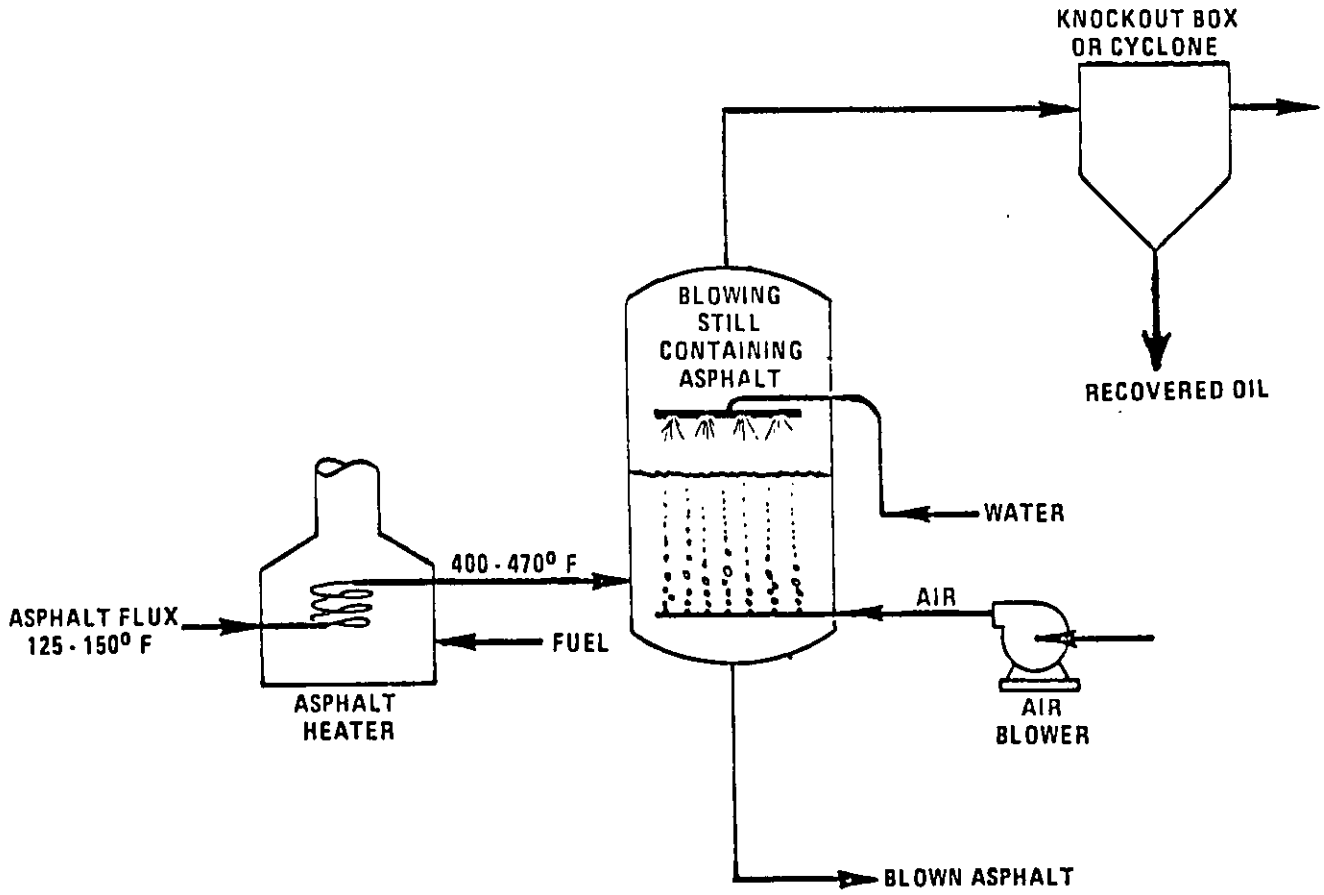

Figure 3-14. Air-blowing of asphalt.

temperature rises as blowing proceeds. This, in turn, further increases the reaction rate. Asphalt temperature is normally kept at about 260°C (500°F) during blowing by spraying water onto the surface of the asphalt, although external cooling may also be used to remove the heat of reaction. The heat of reaction during air blowing is relatively low for some crudes, and auxiliary cooling may not be required. The allowable upper limit to the reaction temperature is dictated by safety considerations, with the maximum temperature of the asphalt usually kept at least 28°C (50°F) below the flash point of the asphalt being blown. The design and location of the sparger in the still governs how much of the asphalt surface area is physically contacted by the injected air, and the vertical height of the still determines the time span of this contact. Vertical stills, because of their greater head (asphalt height) require less air flow for the same amount of asphalt-air contact (see Figures 3-15 and 3-16). Both vertical and horizontal stills are still in use, but where new design is involved, a vertical type is preferred by the industry because of the increased asphalt-air contact and consequent reduction in blowing times.[19] Asphalt losses from vertical stills are also reported to be less than those from horizontal stills.[19] All recent blowing still installations have been of the vertical type. Asphalt blowing can be either a batch process or a continuous operation. These operations are described in more detail in Reference 18. All stills at roofing plants are believed to use the batch process, as do most of the asphalt processing plants, but the ratio among refineries is unknown.

The emissions from the blowing still are primarily organic particulate with a fairly high concentration of gaseous hydrocarbon (6,000 to 7,000 ppm) and polycyclic organic matter [112,308 $\mu g/Nm^3$ (0.00007 lb/ft^3)]. The blowing still has the highest total emissions of any of the emission sources in an asphalt roofing plant.

3.2.2 Process Emissions

As was discussed in Section 3.2.1, there are a considerable number of emission sources in a typical asphalt roofing and siding manufacturing plant. Emissions result from asphalt handling and storage, asphalt processing, various roofing line operations, and mineral products handling and storage. The potentially significant sources are listed in Table 3-1,

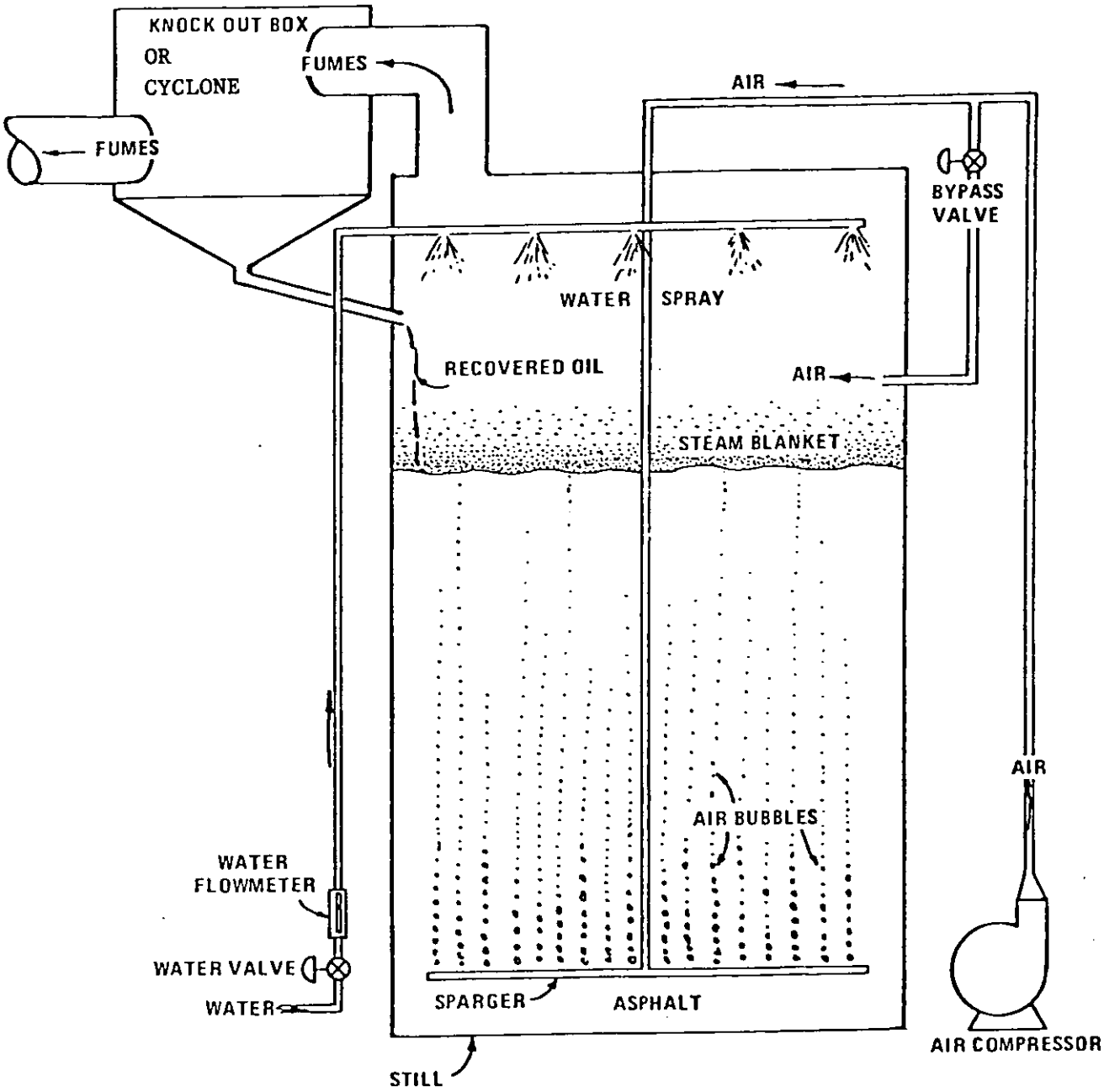

Figure 3-15. Design features of vertical still equipped with a cyclone oil recovery system.

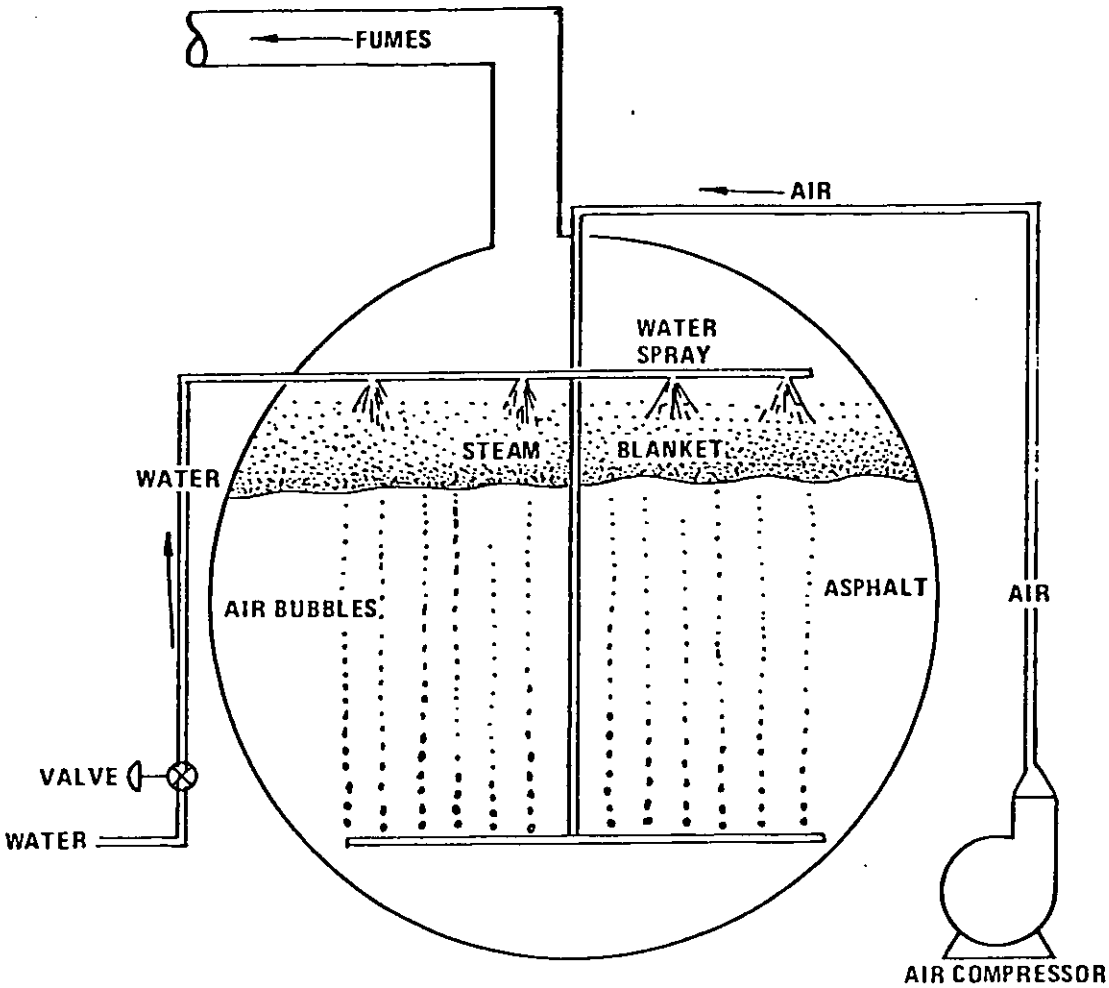

Figure 3-16. Design features of horizontal still.

which also catalogs some of the parameters which are believed to affect both the magnitude and type of emissions from those activities which involve the processing, storage, or use of asphalt.

There are many variables which could potentially affect emissions from asphalt roofing manufacturing operations. For example, particulate emissions from roofing lines (asphalt fumes from the saturator, wet looper, and coater) may increase on a kilogram-per-megagram-shingle basis, with increases in line speed. No test data are available to confirm or disprove this statement. Also, a number of industry representatives are of the opinion that spray or spray/dip saturators create more fumes than do dip saturators, other factors being equal. The test data suggest a similar conclusion since the one spray/dip saturator tested generated 5 to 10 times as much particulate emission on a kilogram-per-hour basis as the dip saturators tested. It is also hypothesized that:

1. uncontrolled emissions are higher for asphalts derived from the more volatile West Coast or Middle East crudes than from the midcontinent crudes;

2. vertical stills emit fewer fumes than horizontal units;

3. uncontrolled emissions from roofing lines are lower when saturants and coatings are used which have higher than normal softening points; and

4. uncontrolled emissions of asphalt particulate increase with increases in the moisture content of the felt.

No one to our knowledge has yet attempted to isolate and quantify the effects of these variables on uncontrolled emission rates. Plants were tested, however, in different parts of the country and with different types of saturators, so the range of data collected should encompass the effect of many of these variables. A summary of the test data for uncontrolled emissions is presented in Table 3-2.

The sampling and analysis techniques developed (and used) for this series of tests on sources of asphalt fumes are somewhat different from the methods used by other investigators (see Appendix D for test method). As a result, data from other sources could not be correlated to data developed from this program.

3.2.2.1 Emissions from Asphalt Handling and Storage. The uncontrolled emissions from one asphalt surge tank and five 114-m^3

TABLE 3-1. EMISSION SOURCES AND VARIABLES AFFECTING EMISSIONS IN AN ASPHALT ROOFING PLANT

Emission source	Pollutants	Raw material variations influencing emissions	Process parameters influencing emissions
Asphalt storage tank	Gaseous hydrocarbons and particulate	* Type of crude (Middle East, West Coast, midcontinent, Venezuelan) * Characteristics of asphalt (softening point, penetration, viscosity, flash point, etc.)	* Storage temperature * Loading/storage cycle
Asphalt blowing still	Particulate hydrocarbon, gaseous hydrocarbons	* Type of crude * Characteristics of asphalt	* Blowing temperature * Air rate * Design/configuration of still * Type of product (saturant and coating asphalt)
Saturator	Particulate hydrocarbon, gaseous hydrocarbons	* Type of crude * Characteristics of asphalt * Characteristics of felt (type, width weight, moisture content)	* Type of saturator (spray/dip, spray, dip) * Saturant temperature * Line speed
Wet looper	Gaseous hydrocarbons	* Characteristics of asphalt * Characteristics of felt	* Line speed
Coater-mixer tank	Particulate hydrocarbon, gaseous hydrocarbons, and inorganic particulates	* Type of filler * Characteristics of filler (particle shape, density, moisture content) * Characteristics of asphalt	* Temperature of filler * Temperature of coating asphalt * Filler/asphalt ratio
Coater	Particulate hydrocarbon, gaseous hydrocarbons, and inorganic particulates	* Characteristics of asphalt * Type of crude * Characteristics of felt * Type and proportion of filler used (type - limestone, rock dust)	* Line speed * Amount of coater applied
Surface application	Inorganic particulates	* Type of backing agent (sand, talc, mica) * Characteristics of backing agent	* Line speed * Type of product
Sealant strip application	Gaseous hydrocarbons	* Characteristics of asphalt	* Line speed * Type of product
Materials handling	Inorganic particulates	* Type of backing agent, filler, and granules * Particle size range	* Type of conveyor (belt, pneumatic screw, manual)
Filler dryer	Inorganic particulate combustion gases	* Type of filler * Moisture content * Particle size range of filler	* Type of dryer * Firing method

TABLE 3-2. UNCONTROLLED EMISSIONS FROM ASPHALT ROOFING PLANTS FROM TEST DATA

Plant	Emission source	Production rate[a]		Uncontrolled emissions[a]					
		Mg/yr	tons/yr	kg/h	lb/h	kg/Mg	lb/ton	Mg/yr	tons/yr
A	Saturator, dip coater	112,590	124,120	6.62	14.59	0.235	0.47	26.50	29.20
B	Saturator, dip coater	147,680	162,800	12.50	27.50	0.340	0.68	49.90	55.00
	Storage tanks[b]			1.00	2.20	0.080	0.16	3.99	4.40
C	Saturator, spray-dip coater, and storage tanks	76,300	84,120	29.93	66.00	1.570	3.14	119.70	132.00
D	Saturator, dip	173,070	190,800	6.93	15.27	0.160	0.32	27.76	30.60
E	Blowing still[c]								
	Saturant	13,430	14,800	80.00	176.4	3.440	6.89	46.24	50.98
	Coating	11,700	12,900	98.60	217.4	12.690	25.38	148.50	163.70

[a]Yearly production and emissions are based on the roofing line operating and producing shingle 4,000 hours per year and the blowing still operating 2,000 hours per year. Saturant and coating asphalts are blown 573 and 1,427 hours per year respectively.
[b]Five 114 m (30,000 gal) storage tanks were tested. Emission rate in kg/Mg (lb/ton) based on usage of 12.5 Mg/h (13.75 tons/h) of asphalt from storage tanks.
[c]Tested still has a working capacity of 36.34 m (9,600 gal) compared to 75.71 m (20,000 gal) and 94.64 m (25,000 gal) for model plants.

(30,000-gal) asphalt storage tanks were measured at one roofing plant. Hot asphalt was being unloaded from trucks, recirculated to the saturator, and pumped to the coater-mixer while the tests were conducted. The range of uncontrolled emissions was from 0.64 kg/h (1.4 lb/h) to 1.63 kg/h (3.6 lb/h). The average emission rate for the three tests was 1.0 kg/h (2.2 lb/h).

3.2.2.2 Emissions from Blowing Stills. One blowing still installation was tested during this program. The uncontrolled emission rate was measured during three saturant asphalt blows and three coating asphalt blows. The range of uncontrolled emissions during the saturant blows was from 57.61 kg/h (127 lb/h) to 102.97 kg/h (227 lb/h). The average emission rate for the three saturant blow tests was 80 kg/h (176 lb/h). The rate of uncontrolled emissions from the coating blows varied from 95.71 kg/h (211 lb/h) to 103.87 kg/h (229 lb/h). The average for the three coating blows was 98.6 kg/h (217 lb/h). The average uncontrolled emission rate for all six runs was 89.4 kg/h (197 lb/h).

3.2.2.3 Emissions from Roofing Line Operations. Emission tests were conducted at four asphalt roofing plants where emissions from a varied grouping of sources were measured.

At Plant A the emissions from the dip saturator, wet looper, and coater were measured. The uncontrolled emissions varied from 4.99 kg/h (11 lb/h) to 7.98 kg/h (17.6 lb/h), and the average of the four tests was 6.62 kg/h (14.6 lb/h).

At Plant B the emissions from the dip saturator, wet looper, and coater were measured. The uncontrolled emissions ranged from 8.89 kg/h (19.6 lb/h) to 15.15 kg/h (33.4 lb/h), with an average emission rate of 12.5 kg/h (27.5 lb/h).

There were three tests conducted to determine the emissions from a spray-dip saturator, wet looper, coater, and eight asphalt storage tanks at Plant C. The data from one of the tests cannot be used because of an accidental bumping of the stack wall with the sampling probe during the test. The uncontrolled emission rates for the two tests were 31.52 kg/h (69.5 lb/h) and 28.39 kg/h (62.6 lb/h).

The uncontrolled emissions from a dip saturator and wet looper were measured at Plant D. There were three tests, and the emissions ranged from 4.99 kg/h (11 lb/h) to 10.16 kg/h (22.4 lb/h). The average for the three tests was 6.93 kg/h (15.3 lb/h).

3.2.2.4 Emissions from Mineral Handling and Storage. Particulates may be emitted from any of the mineral handling and transfer operations, but most of the particulate emissions usually occur at transfer points and use points. No tests were conducted during this program to determine the emissions from mineral transfer and storage operations (screw conveyors, belt conveyors, air slides, bucket elevators, pneumatic conveyors, and silos). Uncontrolled emissions from the conveying, screening, and handling of crushed stone have been estimated to be 1 kg/Mg (2 lb/ton) of inorganic particulate.[20]

3.3 BASELINE EMISSIONS

3.3.1 Introduction

The baseline emission level is the level of control that is achieved by the industry in the absence of a new source performance standard. The opacity and particulate emission regulations for the States which have roofing plants are summarized in Table 3-3. A number of regional and State agencies were contacted to ascertain if the regulations were applied on a plant basis or on an emission source basis. The typical State considers that a plant is one source, so the regulation applies to the plant. Based on the average particulate weight permitted, a small roofing plant producing 27.2 Mg/h (30 tons/h) of product is allowed emissions of 18.14 kg/h (40 lb/h). This is equivalent to 0.67 kg/Mg (1.33 lb/ton) if expressed as an emissions to product ratio. The typical opacity regulation is 20 percent.

If the State regulations are compared with the actual uncontrolled emissions at plants tested (Table 3-2), it is noted that the uncontrolled emissions from three of the roofing plants without stills would meet the mass emissions standards of most States. Emissions from the fourth plant would not meet the mass emission standards of most States. Uncontrolled emissions from blowing stills exceed the mass emissions standards of all States.

TABLE 3-3. SUMMARY OF EMISSION REGULATIONS AND LOCATION OF ASPHALT ROOFING PLANTS BY STATE

State	Plant size	No. of plants	Particulate emissions[b] kg/h	Particulate emissions[b] lb/h	Visible emissions Percent opacity
Alabama	L	6	15.68	34.57	20
	M		15.12	33.30	
	S		13.53	29.83	
Arkansas	L	5	15.66	34.52	20 (new)
	M		15.10	33.28	
	S		13.43	29.60	40 (existing)
California		14		c	d
Colorado	L	2	13.43	29.60	20
	M		13.43	29.60	
	S		13.43	29.60	
Connecticut	L	1	15.66	34.52	20
	M		15.10	33.28	
	S		13.43	29.60	
Florida	L	4	15.66	34.52	20
	M		15.10	33.28	
	S		13.43	29.60	
Georgia	L	6	21.97	48.44	20 (on dusts)
	M		21.00	46.30	(nuisance control)
	S		18.14	40.00	
Illinois	L	10	11.35	25.03	30
	M		8.60	19.08	
	S		7.08	15.60	
Indiana	L	3	21.97	48.44	40
	M		21.00	46.30	
	S		18.14	40.00	
Kansas	L	2	21.97	48.44	20 (new)
	M		21.00	46.30	
	S		18.14	40.00	40 (existing)
Louisiana	L	3	21.97	48.44	20
	M		21.00	46.30	
	S		18.14	40.00	

TABLE 3-3. SUMMARY OF EMISSION REGULATIONS AND LOCATION OF ASPHALT ROOFING PLANTS BY STATE (continued)

State	Plant size	No. of plants	Particulate emissions[b] kg/h	Particulate emissions[b] lb/h	Visible emissions Percent opacity
Maryland	L	3	22.11	48.75	No visible
	M		21.08	46.37	
	S		18.14	40.00	
Massachusetts	L	3	21.62	47.67	20
	M		20.34	44.84	
	S		18.14	40.00	
Michigan	L	1	21.97	48.44	40
	M		21.00	46.30	
	S		18.14	40.00	
Minnesota	L	5	29.97	48.44	20 (new)
	M		21.00	46.30	
	S		18.14	40.00	60 (existing)
Mississippi	L	1	21.97	48.44	40
	M		21.00	46.30	
	S		18.14	40.00	
Missouri	L	5	21.97	48.44	20 (new)
	M		21.00	46.30	
	S		18.14	40.00	40 (existing)
New Jersey	L	6	0.45	1.00	20
	M		0.45	1.00	
	S		0.23	.50	
New Mexico	L	1	21.97	48.44	20
	M		21.00	46.30	
	S		18.14	40.00	
North Carolina	L	3	21.97	48.44	20 (new)
	M		21.00	46.30	
	S		18.14	40.00	40 (existing)
Ohio	L	6	21.97	48.44	20
	M		21.00	46.30	
	S		18.14	40.00	

TABLE 3-3. SUMMARY OF EMISSION REGULATIONS AND LOCATION OF ASPHALT ROOFING PLANTS BY STATE (continued)

State	Plant size	No. of plants	Particulate emissions[b] kg/h	Particulate emissions[b] lb/h	Visible emissions Percent opacity
Oklahoma	L	3	21.97	48.44	20
	M		21.00	46.30	
	S		18.14	40.00	
Oregon	L	4	21.97	48.44	20 (new)
	M		21.00	46.30	
	S		18.14	40.00	40 (existing)
Pennsylvania		4	e		f
South Carolina	L	1	21.97	48.44	20 (new)
	M		21.00	46.30	
	S		18.14	40.00	40 (existing)
Tennessee	L	2	15.66	34.52	20
	M		15.10	33.30	
	S		13.43	29.60	
Texas	L	10	39.13	86.26	20
	M		33.72	74.35	
	S		30.57	67.40	
Utah		1		85% Control	20 (new)
					40 (existing)
Washington		2		g	20 (new)
					40 (existing)
West Virginia		1		g	20

[a]Production rates for typical plants operating 4,000 hours per year are:

Large		Medium		Small	
Mg/yr	tons/yr	Mg/yr	tons/yr	Mg/yr	tons/yr
281,201	310,000	219,518	242,000	109,759	121,000

TABLE 3-3. SUMMARY OF EMISSION REGULATIONS AND LOCATION OF ASPHALT ROOFING PLANTS BY STATE[21]
(concluded)

State	Plant size[a]	No. of plants	Particulate emissions[b] kg/h	Particulate emissions[b] lb/h	Visible emissions Percent opacity

[b]Emissions allowed by typical process weight tables:

	Small		Medium		Large	
Hourly	kg/h	lb/h	kg/h	lb/h	kg/h	lb/h
	18.14	40.00	21.00	46.30	21.97	48.44
Annual	Mg/yr	tons/yr	Mg/yr	tons/yr	Mg/yr	tons/yr
	72.56	80	84.00	92.60	87.88	96.88

[c]Regulation is by county or Air Pollution District. Bay Area = 18.14 kg/h (40 lb/h). Los Angeles Pollution Control District = .08 gr/DSCF.
[d]20 percent for Los Angeles Pollution Control District and Bay Area.
[e]In Pennsylvania the regulation is based on DSCFM of gas emitted. For the Asphalt Roofing Industry, emissions should not exceed .04 gr/DSCF.
[f]20 percent for a period or periods aggregating more than 3 minutes in any one hour.
[g]These two states did not include a general process curve in their 1972 standard for particulate.

It appears that most States enforce the regulations by relying on opacity readings and nuisance complaints. Although an opacity regulation is convenient from an enforcement point of view, opacity measurements do not appear to reflect the degree of control being achieved. The emissions data collected from control devices during the tests do not show a direct correlation between particulate emissions and opacity readings. According to the "Afterburner Systems Study," hydrocarbon emissions are not visible at temperatures above 427°C (800°F), but there is virtually no destruction of hydrocarbons below 538°C (1000°F).[22] Therefore, it is possible that an afterburner operating between these temperatures could operate with a zero opacity and yet remove little or no particulates or gaseous hydrocarbons.

Conversely, a high opacity reading is usually indicative of high mass emissions. Therefore, many States measure particulate emissions only if opacity readings indicate that such a measurement is warranted. When a State agency does decide to test for particulates, the test method normally used is the EPA Method 5 (which employs a heated probe).[23] The heated probe lowers the particulate catch because some of the fume is in a gaseous state at test temperature. Therefore, the test method used by most States is not adequate to determine if particulate emissions are at an acceptable level. As a result, the common practice in the roofing industry is to apply only the controls necessary to meet opacity requirements. This limit is usually attained through the use of afterburners to control blowing stills. High velocity air filters, electrostatic precipitators, or afterburners are commonly used to control emissions from the saturator coater and asphalt storage tanks.

3.3.2 Definition of Baseline

Project personnel surveyed 13 plants with blowing stills. Many of the afterburners controlling the stills appeared to be homemade or had insufficient temperatures and residence times. One still was found which was controlled by an afterburner that had the potential for high removal efficiency as determined by visible emission readings, design configuration, and operating temperature. This still was tested, and the uncontrolled emissions are included in Table 3-2. Saturators, coaters, and storage tanks were surveyed at 20 plants. Four of these plants were

tested because they were found to use better designed and operated control devices. The uncontrolled emissions are reported in Table 3-2. Other less efficient devices on stills, saturators, coaters, and storage tanks were reportedly satisfactory for State and local agency requirements, primarily enforced solely by opacity. As noted earlier, a plant without a still and without controls will meet SIP's. Due to a lack of data to show otherwise, it is assumed that all plants are meeting the SIP's; therefore, baseline conditions are defined for small, medium, and large plants as shown in Table 3-4. In some cases, actual plants are probably exceeding the mass emissions while others are somewhat lower.

TABLE 3-4. BASELINE PARTICULATE EMISSIONS FOR VARIOUS SIZE MODEL PLANTS ACCORDING TO STATE IMPLEMENTATION PLANS (SIP's)

Plant size	Production rate		Particulate emissions	
	Mg/yr	tons/yr	kg/h	lb/h
Large	281,201	310,000	21.97	48.44
Medium	219,518	242,000	21.00	46.30
Small	109,759	121,000	18.14	40.00

3.4 REFERENCES FOR CHAPTER 3

1. Asphalt and Tar Roofing and Siding Products. U.S. Department of Commerce. Washington, D.C. Series M-29A. Yearly Summaries for 1967-1976 and 1978.

2. Asphalt Roofing Manufacturers Association. Manufacture, Selection, and Application of Asphalt Roofing and Siding Products. Twelfth Edition. New York, N.Y. 1974. p. 3.

3. Cantrell, A. Annual Refining Survey. The Oil and Gas Journal. p. 108-146. March 20, 1978.

4. Tight Money Crimps House-Building Market. The News and Observer. Raleigh, N.C. p. IV-9. February 25, 1979.

5. Telecon. North Carolina Distributor of Roofing Products with Antel, D. C., MRI/NC. March 7, 1979. Prices of asphalt roofing shingles.

6. Telecon. Merz, S., Celotex Corporation, with Cooper, R., MRI/NC. March 8, 1979. Dry materials prices.

7. Asphalt Roofing Manufacturers Association. List of Plants: Asphalt and Tarred Roofing Manufacturers. New York, N.Y. May 12, 1978. 4 p.

8. Asphalt and Tar Roofing and Siding Products: 1977. U.S. Department of Commerce, Washington, D.C. M-29A(77)-1. June 1978. 3 p.

9. GAO Predicts Higher Oil Costs, More Inflation. The News and Observer. Raleigh, N.C. p. 3. March 8, 1979.

10. Telecon. Lambert, D., Exxon Corporation, with Antel, D. C., MRI/NC. March 8, 1979. Prices of asphalt.

11. Danielson, J. A. Air Pollution Engineering Manual. 2nd Ed. Los Angeles Air Pollution Control District. PB-225 132. May 1973. p. 379.

12. Reference 11, p. 380.

13. Reference 11, p. 382.

14. Letter and attachments from Hambrick, M. M., Celotex Corporation, to Goodwin, D. R., EPA/ESED. May 30, 1975. Information on plants at Goldsboro, N.C.; Los Angeles, Calif.; and Cincinnati, Ohio.

15. Letter from Angarano, J. A., The Flintkote Company, to Goodwin, D. R., EPA/ESED. July 17, 1975. p. 4. Information concerning air pollution control for plants at Ennis, Tex., and Los Angeles, Calif.

16. Reference 11, p. 336 and 354.

17. Reference 11, p. 363.

18. Corbett, L. W. Manufacture of Petroleum Asphalt. In: Bituminous Materials; Asphalts, Tars, and Pitches, Vol. 2, Part 1, Hoiberg, A. J. (ed.). New York, Interscience Publishers, 1965. p. 99-103.

19. Letter from Merz, S. A., Celotex Corporation, to Ananth, K. P., MRI/KC. February 4, 1975. Process operations at Goldsboro, N.C. plant.

20. U.S. Environmental Protection Agency. Compilation of Air Pollutant Emission Factors. AP-42. Research Triangle Park, N.C. April 1973. p. 8.20-1.

21. Analysis of Final State Implementation Plans - Rules and Regulations. U.S. Environmental Protection Agency. Research Triangle Park, N.C. APTD-1334. July 1972. p. 29-31, 51-52.

22. Afterburner Systems Study. U.S. Environmental Protection Agency. Research Triangle Park, N.C. EPA-R2-72-062. August 1972. p. 18a and 19.

23. U.S. Environmental Protection Agency. Part 60: Standards of Performance for New Stationary Sources. Method 5: Determination of Particulate Emissions from Stationary Sources. 40 CFR 60. Washington, D.C. Government Printing Office. August 18, 1977.

4. EMISSION CONTROL TECHNIQUES

4.1 INTRODUCTION

Techniques used to minimize emissions from asphalt blowing stills, asphalt saturators, wet loopers, and coaters fit into two categories, that is, process controls and add-on emission controls. Both process and add-on controls are discussed in the following sections, as are the control strategies for each of these categories. Emission sources and add-on control devices are summarized in Table 4-1.

4.2 PROCESS AND EQUIPMENT CONTROLS

Process selection and control of process parameters reportedly can be used to minimize uncontrolled emissions from asphalt blowing stills, asphalt saturators, wet loopers,* and coaters. Process controls include the use of the following:

1. dip saturators, rather than spray or spray-dip saturators;
2. vertical stills, rather than horizontal stills;
3. asphalts that inherently produce low emissions;
4. higher flash point asphalts;
5. reduced temperatures in the asphalt saturant pan;
6. reduced asphalt storage temperatures; and
7. lower asphalt blowing temperatures.

Literature searches were conducted, and the industry was surveyed; but no data were supplied or located which would quantify the effects of these process controls, either individually or collectively, during the development phase of this program. However, such controls (1) seem reasonable from an engineering standpoint, (2) reflect opinions expressed by people in the industry, and (3) are supported by published information.[1,2] In consideration of these variables and their effects, the emissions testing program included several types of control devices,

---

*The wet looper is also called a "hot looper" or the "striking-in" section.

TABLE 4-1. ASPHALT ROOFING PLANT EMISSION SOURCES AND ADD-ON CONTROL DEVICES

Emission sources	Control devices
A. Saturator, wet looper (hot looper), and coater[a]	Afterburner High velocity air filter Electrostatic precipitator
B. Coater-mixer[b]	High velocity air filter
C. Asphalt blowing still	Afterburner
D. Asphalt storage tanks[c]	Mist eliminator
E. Mineral surfacing and granule application	Baghouse
F. Granule and mineral delivery, storage, and transfer	Baghouse(s)

[a]These sources usually share a common enclosure, and emissions are ducted to a common control device.
[b]Emissions from the coater-mixer are controlled, at some plants, by routing fumes to the control device used for sources listed in A, above.
[c]Some plants control emissions from storage tanks with the same device used for processes listed in A and then use a mist eliminator during periods when the roofing line is not operating (e.g., weekends). Asphalt delivery can be accomplished via a closed system which vents emissions to the same control device as that used for the tanks.

plants in different parts of the country using different asphalts, and dip saturators as well as spray-dip saturators.

4.2.1 Saturators

Dip saturators have been selected for most new asphalt roofing line installations in recent years, and this trend is expected to continue. The most common technique for increasing line speeds in existing installations, however, is to add saturant sprays. This practice is expected to increase uncontrolled emissions considerably, since spray-dip saturators appear to generate more particulate emissions than do dip saturators. Data collected during the test program appears to support this conclusion but are not sufficient to quantify the effect (see Chapter 3, Table 3-2).

4.2.2 Asphalt Blowing Stills

Recent asphalt blowing still installations have been almost exclusively of the vertical type because of their higher efficiency and lower emissions.[3] Vertical stills occupy less space and require no heating during oxidizing [if the temperature of the incoming flux is above 204°C (400°F)]. Vertical stills will, therefore, probably be used in all new installations equipped with stills and for most retrofit situations.

4.2.3 Asphalt Softening and Flash Points

It is reported that asphalt fluxes with lower flash points and softening points tend to have higher emissions.[2] These asphalt fluxes generally have been less severely cracked and contain more low-boiling fractions. Many of these light ends can be expected to boil off during blowing. The reported ranges of softening and flash points for asphalt fluxes, saturants, and coatings currently in use in the asphalt roofing manufacturing industry are listed in Table 4-2. Limiting the minimum softening and flash points of asphalt flux should reduce the amount of fumes generated during blowing since less blowing is required to produce a saturant or coating asphalt. Catalysts are often used in coating asphalts to reduce blowing times. Their effect on emissions is unknown.

Saturant and coating asphalts with high softening points should reduce emissions from felt saturation and coating operations. However, producing the higher softening asphalt flux requires more blowing, which increases uncontrolled emissions from the blowing operation. Whether

TABLE 4-2. ASPHALT PARAMETERS[4]

Parameter	Asphalt flux °C	(°F)	Asphalt saturant °C	(°F)	Asphalt coating °C	(°F)
Softening point	26-49	(79-110)	40-71	(104-158)	99-118	(210-244)
Flash point	221-349	(430-660)	>246	(>475)	>246	(>475)

overall plant emissions are decreased depends on the relative effectiveness of the emission control equipment on the blowing still and the saturator and coater, respectively. Typically, the afterburner controlling emissions from a blowing still is more effective in reducing gaseous hydrocarbons than the particulate control devices which may be used on the saturator.

4.2.4 Storage and Use Temperatures

As the temperature of an asphalt is raised above its softening point, emissions from that asphalt can be expected to increase.

Emissions can be minimized by keeping storage and use temperatures as low as possible. Table 4-3 lists the range of temperatures noted during surveys and tests conducted for the study.

4.3 CONTROL SYSTEMS

The control systems used in this industry include various types of hoods, total enclosure capture systems, and add-on control devices.

4.3.1 Capture Systems

Capture of emissions from asphalt blowing stills, asphalt storage tanks, asphalt truck unloading, the coater-mixer, and from mineral* and granule unloading, storage and transfer systems is (or can be) accomplished by the use of closed systems. Uncontrolled emissions from the mineral surfacing and granule application areas may be captured by hoods or by total enclosure of the application area.

Emissions from the saturator, wet looper, and coater are usually collected by a single enclosure as shown in Figure 4-1, by a canopy type hood, or by an enclosure and hood combination (saturator and wet looper enclosed and coater hooded). The doors shown in Figure 4-1 allow the operators access as required for maintenance and repair. This particular system is designed with two-stage fans to provide additional exhaust ventilation during periods when the doors are open. The ventilation requirements to obtain complete pickup will vary depending on the extent to which openings in the enclosures are minimized and on safety considerations.

---

*This classification includes mineral stabilizer, talc, and sand.

TABLE 4-3. STORAGE AND OPERATING TEMPERATURES

	Flux storage		In-process storage (saturant and coating)		Saturant pan		Asphalt blowing	
	°C	(°F)	°C	(°F)	°C	(°F)	°C	(°F)
Temperatures in current use	65-260	(149-500)	240-260	(464-500)	232-246	(450-475)	246-274	(475-525)

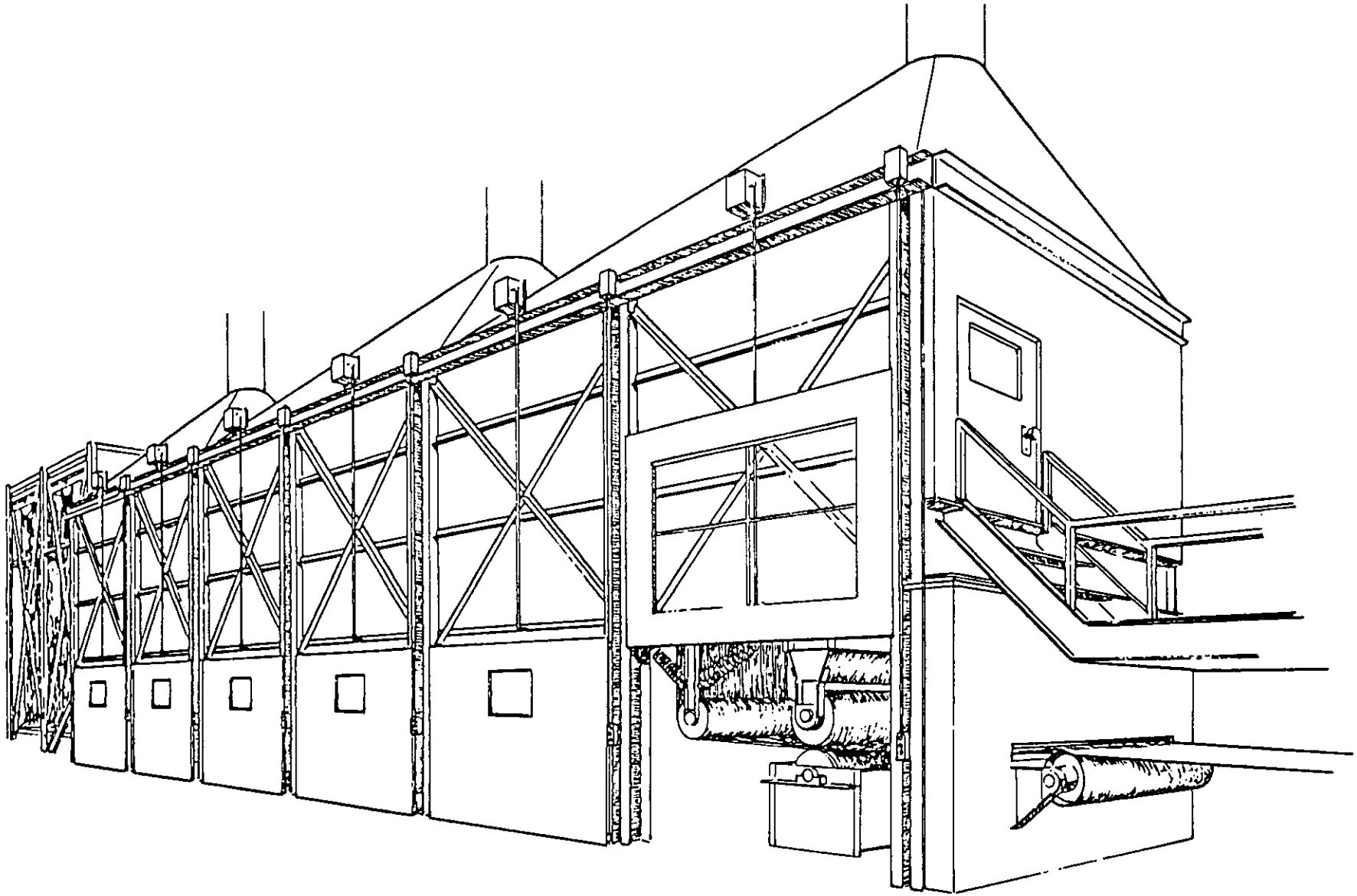

Figure 4-1. Total enclosure of saturator, wet looper, and coater.

Safety considerations dictate that the concentration of combustible pollutants at the fume source and in the capture system be kept below the lower flammability limit. The resulting fume streams, since they will not support combustion unaided, are classified as "dilute."

Fugitive emissions from both open and closed asphalt unloading systems were monitored during the testing program.

4.3.2 Control Devices for Organic and Inorganic Particulates

Several types of control devices are used in this industry for control of pollutants. The devices include high velocity air filters (HVAF), mist eliminators, afterburners, electrostatic precipitators (ESP), scrubbers, and fabric filters. The devices for which emissions data were available are discussed in detail in the following paragraphs.

4.3.2.1 High Velocity Air Filter (HVAF). HVAF's are used in asphalt roofing plants to collect particulate hydrocarbons emitted from the saturator, wet looper, and coater, and are sometimes used to collect particulate hydrocarbons emitted from the coater-mixer and asphalt storage tanks. A typical rotary drum high velocity air filter installation is shown in Figure 4-2. Its basic components are a cooling section, a motor-driven fan, a rotating drum filter section, and a mist eliminator.

HVAF units are filtration devices and do not remove gas phase organic compounds contained in the exhausts from saturators, wet loopers, coaters, and asphalt storage tanks. Thus, for effective capture of hydrocarbon emissions, the gases entering the HVAF unit must be cooled to about 32° to 49°C (90° to 120°F). The cooling may be accomplished by either dilution air, water sprays, or a shell and tube heat exchanger.[5]

Dilution air cooling requires a larger fan, fan motor, and a larger control device to handle the increased air volume. Cooling by direct contact water spray is simple and requires less energy and smaller equipment. It does produce an oil-water mixture which must be settled so that the oil can be used for fuel or recycled to the oil refinery and the water can be recycled to the spray cooler. With a shell and tube heat exchanger, the fan, fan motor, and particle capture device would be smaller than that required for air cooling, and the oil-water separator would not be required. Condensed oil could be drained from the cooler and used directly for fuel or for recycle. However, shell and tube

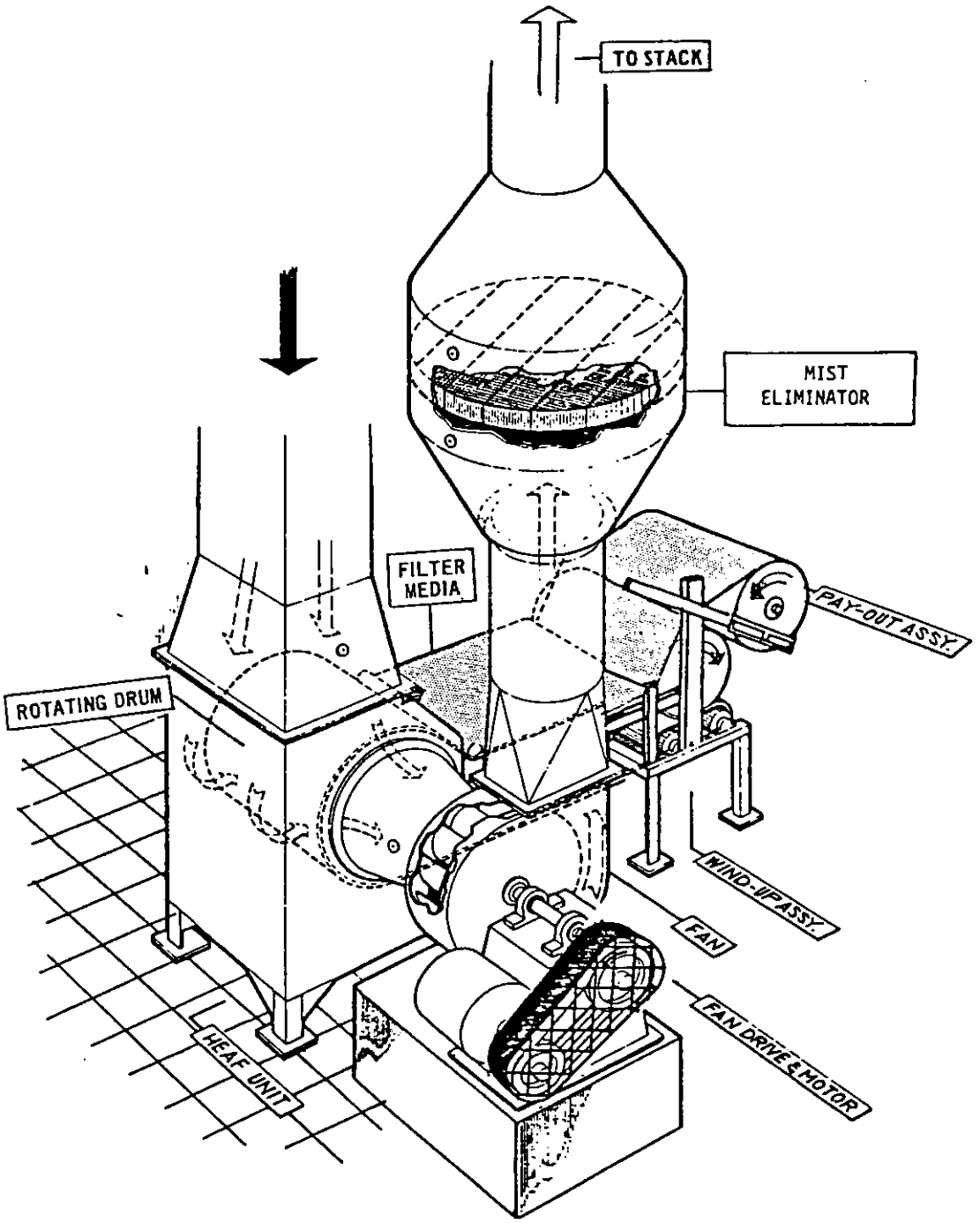

Figure 4-2. Typical rotary drum high velocity air filter installation.[6]

capital costs would be higher, and the shell side of the exchanger would require solvent cleaning several times a year. The waste solvent would create a waste disposal problem. A fan would be required to overcome the additional pressure drop.

Precooling and condensation minimizes the amount of organic vapors which would otherwise pass through the filter and condense in the atmosphere to produce a visible plume. The quantity of gaseous organic emissions and the extent of precooling needed to prevent a visible plume are somewhat dependent upon the particular crude and the degree of refining of the crude from which the asphalt is produced.[1] Data are not available to define the relative quantities of organic emissions produced by different crudes or the relationship between the temperature of the pollutant stream and the physical state of the various pollutants.

As the exhaust gases pass through the HVAF filter media, particulates impact on the glass fibers and are separated from the gas stream. The filter media is supported by a screen and a perforated drum retainer, as shown in Figure 4-2. The filter media is a 2.54-cm (1-in.) thick fiber glass mat having a density of 0.20 kg/m^2 (0.66 oz/ft^2). The fibers are random and have a diameter of about 4 μm.[7] High filter face velocities are necessary to attain high collection efficiency, as shown in Figure 4-3. Experience with systems operating at asphalt roofing plants has shown that the system should be designed so that the gases pass through the filter media at a face velocity of between 7.62 and 8.64 m/s (1,500 and 1,700 ft/min), which produces a pressure drop of about 6,966 Pa (28 in.) of water.[8] The fan horsepower required for a system capable of handling 18.9 m^3/s (40,000 acfm) is usually in the range of 223,700 to 261,000 W (300 to 350 hp).[9]

The inorganic particulates and the more viscous organic compounds collect on the filter mat and eventually begin to plug it. The micron and submicron size liquid particles attach themselves to the fibers of the filter media and migrate to the discharge side of the mat where they again enter the high velocity air stream as larger, liquid oil droplets.[7] Periodically, the filter media is advanced to expose a small surface of new material to the exhaust flow. Automatic advance of the filter media may be accomplished at either a predetermined time interval or at a

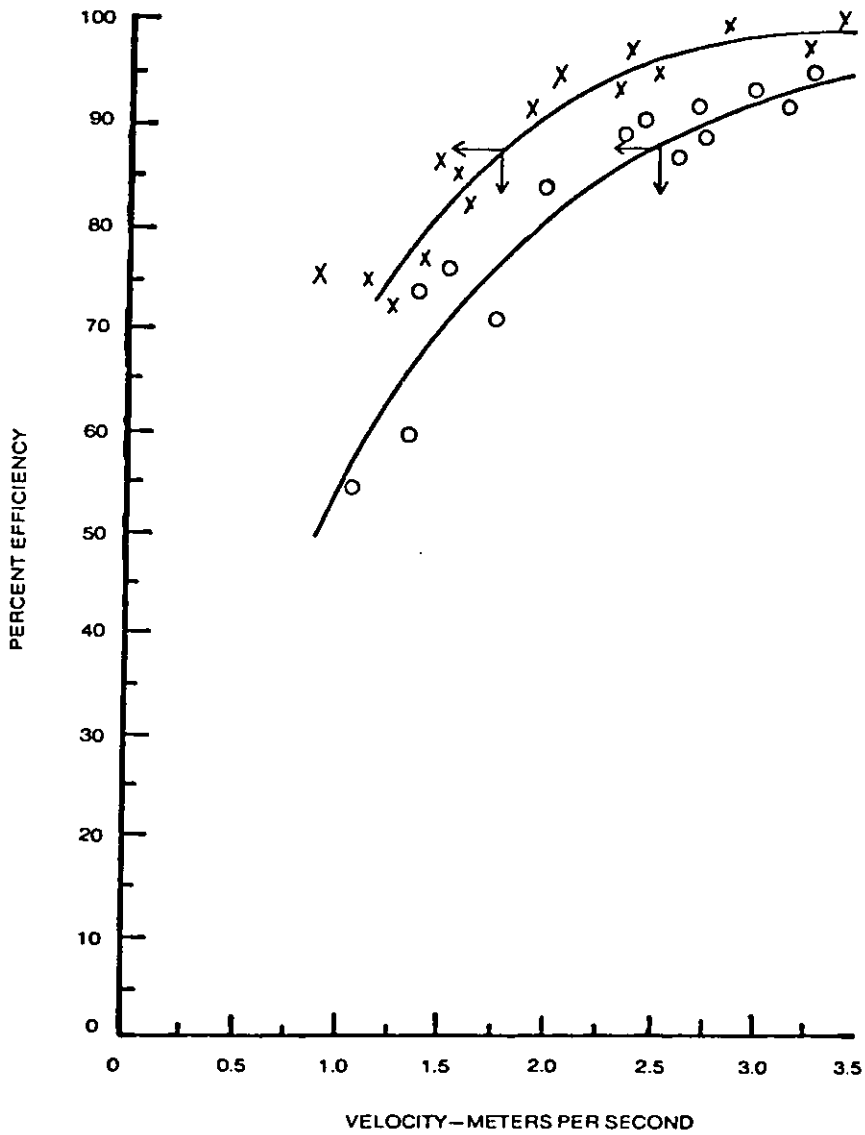

Figure 4-3. HVAF filter media filtration efficiency as a function of filter face velocity for different filter media.[10]

predetermined pressure drop across the filter media. With the time-operated advance, if new material is advanced while the process is shut down, a large filter area may be "uncaked" and the pressure drop will be low, resulting in decreased collection efficiency. Some HVAF systems incorporate a pressure-actuated advance system which operates by sensing pressure at the mat and advancing the filter at a given rate until a preset lower pressure is reached at the mat.

Large oil droplets entering the high velocity air stream from the filter of the HVAF unit pass through a fan and are collected on a mesh-type mist eliminator (see Figure 4-2). The filter media is a 15.2-cm (6-in.) thick mat (packing) of stainless steel fibers retained between stainless steel grids. The face velocity of the gas stream is 1.8 to 2.4 m/s (6 to 8 ft/s) and the pressure drop is ≦1.27 cm (0.5 in.). When the pressure drop increases to 2.54 cm (1.0 in.), cleaning of the mist eliminator is necessary.[11] Cleaning of the mist eliminator is usually performed annually although at a few installations it may be done every 6 months.[12]

A smaller version of the high velocity air filter is shown in Figure 4-4. This type of unit is typically installed for application where the emissions are intermittent, where the gas flows are low [0-2.36 m^3/s (0-5000 acfm)], and where capital costs might be minimized. Emissions from the coater-mixer contain both organic and inorganic particulate and would interfere with afterburner operation. As a result, mini-HVAF'S are sometimes used to control emissions from the coater-mixer at asphalt roofing plants where an afterburner is used to control emissions from the saturator and coater. The basic operation and characteristics of the mini-HVAF are essentially the same as those detailed above for the HVAF unit, except that the filter media is sandwiched between two quick-release flanges, and periodically it is changed manually. The need for regular manual filter changes is a disadvantage of the unit.

Among the advantages of HVAF units in the asphalt roofing industry are: ease of operation, low maintenance, and no fuel costs. The major disadvantages are: a lack of control of gaseous emissions, the large pressure drops required, and the disposal and handling problems associated with the used mats. The saturated mats can become a secondary emission

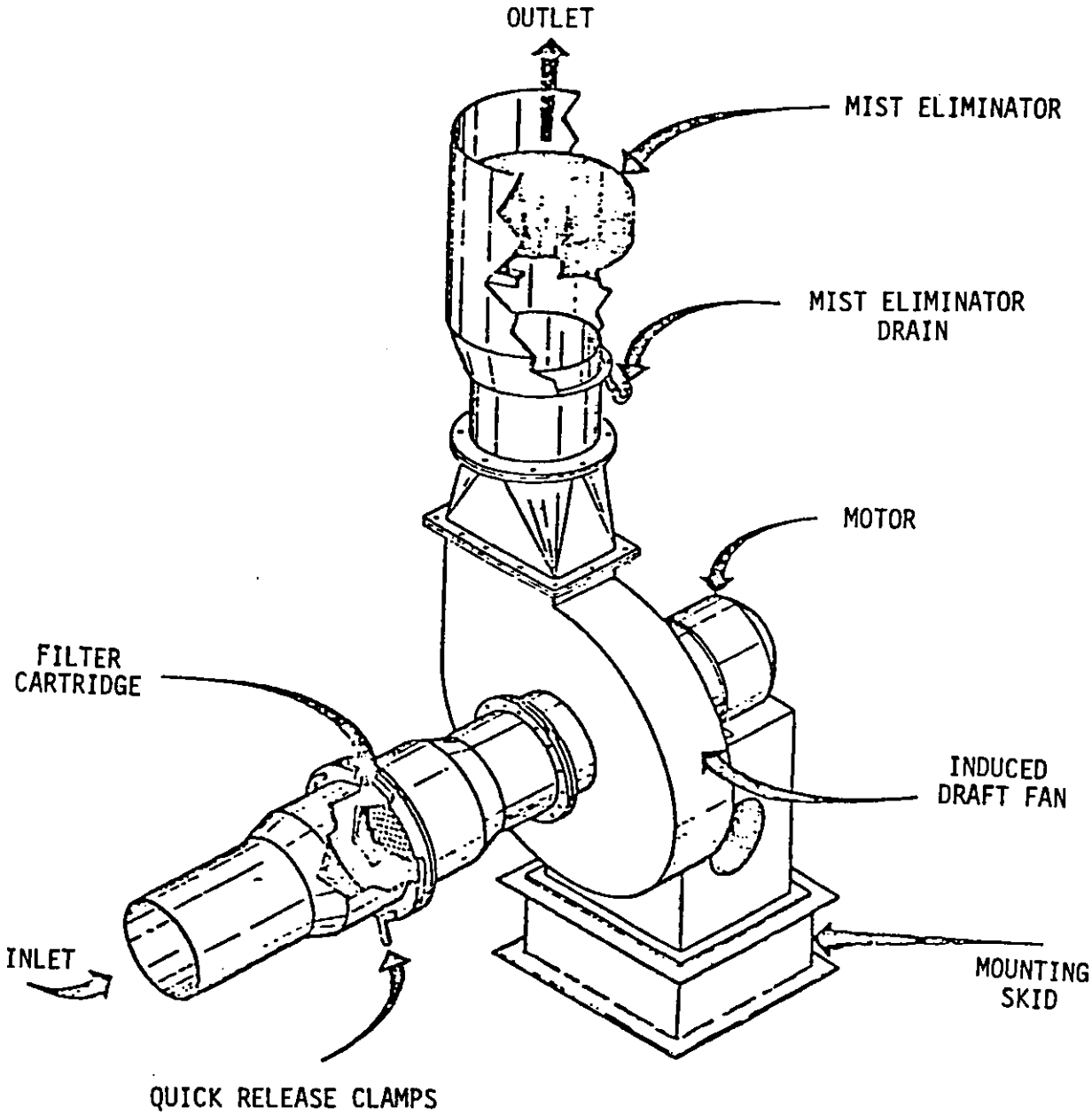

Figure 4-4. Typical mini-HVAF.[13]

source unless proper care is taken to minimize outgassing. Outgassing can occur while the saturated mat is being accumulated on the HVAF takeup reel (windup assembly), during temporary storage, during transport for disposal, or during disposal.

4.3.2.2 Mist Eliminators. Mist eliminators are used in numerous industrial applications to remove both liquid mists and soluble solids from gas streams. Mist eliminators cannot be subjected to high concentrations of inorganic particulate matter because the collection media soon becomes plugged. Thus, where high concentrations of inorganic particulate are present in the exhaust stream, a cleanable or replaceable type prefilter is needed to remove the bulk of the particulates.[14] In asphalt roofing plants, mist eliminators are used to control emissions from asphalt storage tanks.

A typical mist eliminator consists of a packed fiber bed retained between two screens as shown in Figure 4-5. The screens can be concentric cylindrical screens or parallel flat screens. Chemically resistant glass fibers, synthetic fibers, stainless steel fibers, and other fiber materials can be used as packing, depending upon the composition of the effluent stream. Gases containing mist particles flow into the fiber bed where the mist particles are collected on the fibers by inertial impaction, direct interception, and Brownian movement. The collected liquid particles coalesce into liquid films which are moved through the fiber bed by the drag of the gases. The collected liquid drains by gravity off the downstream face of the fiber bed to a separate storage vessel (as shown in Figure 4-6).

The oil collected by a mist eliminator can be disposed of in a number of ways. Some plants use it as fuel for their boilers while others recycle the oil back to the saturator or the storage tanks.

The effectiveness of mist eliminators depends on particle size, particulate loading, liquid viscosity, fiber dimensions, bed density, and gas velocity through the bed. Particle size is one of the most important considerations involved in the design and construction of mist eliminators. A wide range of particle sizes may be handled. Larger particles may be collected by a cyclone or mesh pad. The mist eliminator can then be designed to remove the smaller particles with high efficiency. A wide

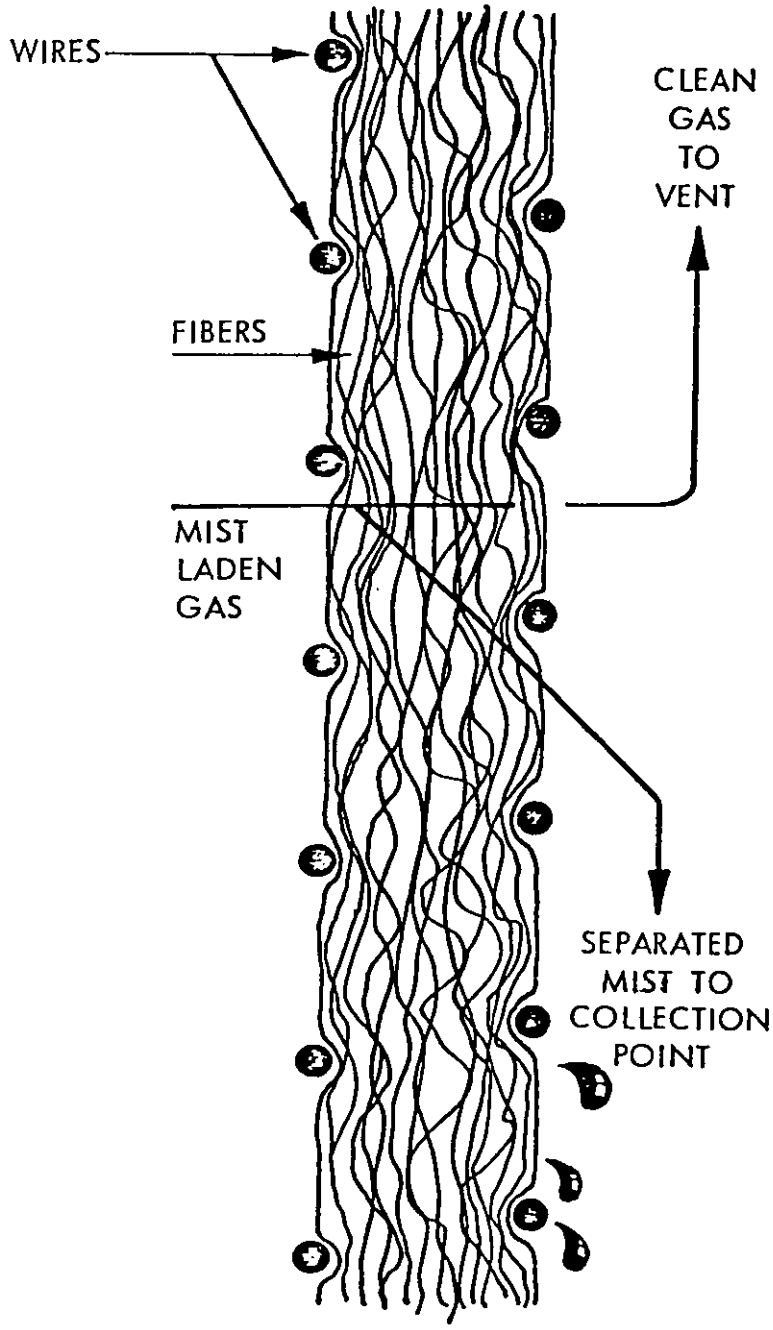

Figure 4-5. Schematic of retaining screens and fiber packing of a mist eliminator.[14]

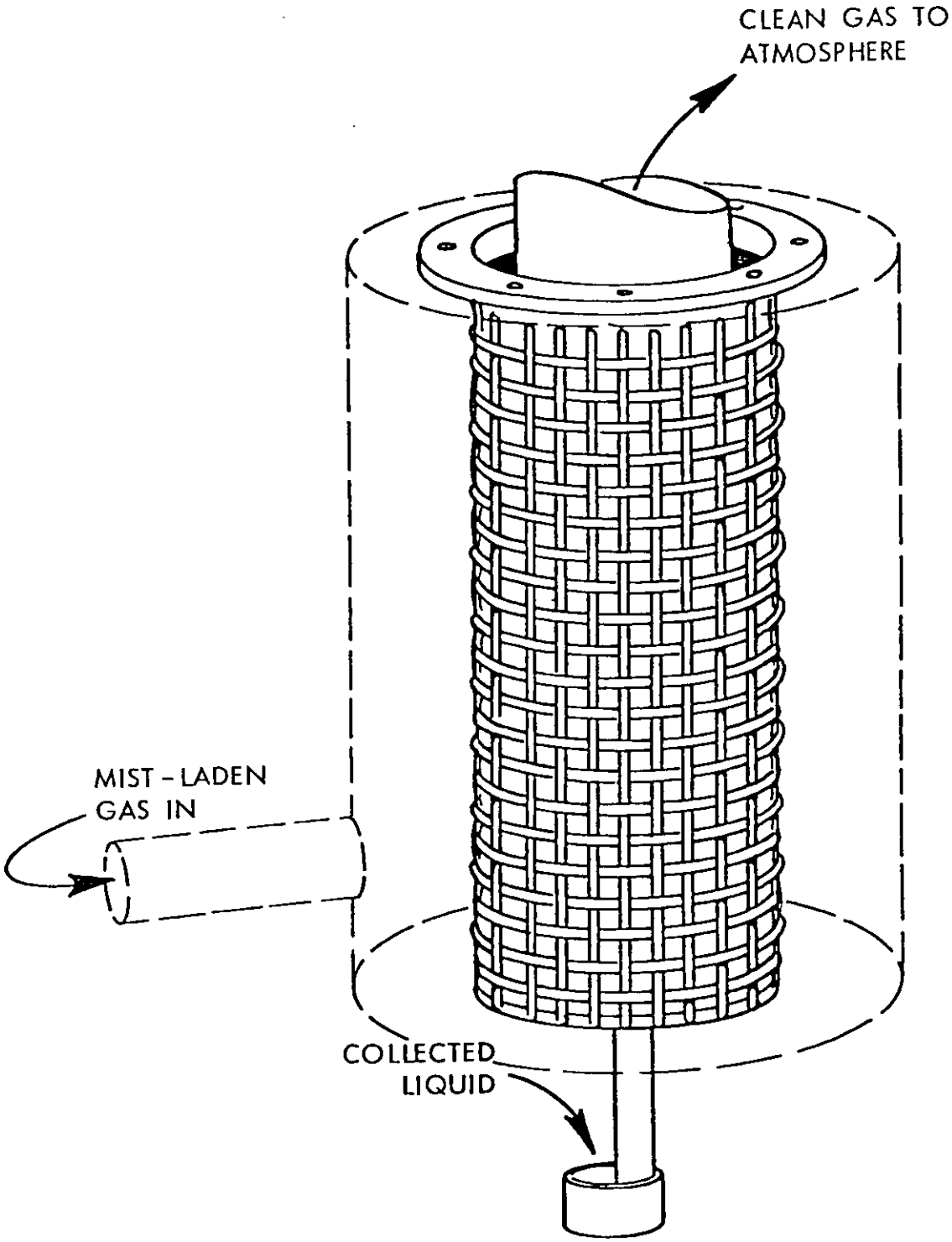

Figure 4-6. Typical mist eliminator element to control emissions from asphalt storage tank.[14]

range of pollutants, particulate loading, and gas volumes can be handled with high efficiency by mist eliminators. This device can handle a wide range of viscosities (up to 5,000 cp) as long as the collected particles can be made to drain from the bed.[14]

Among the advantages of the mist eliminator are a moderate pressure drop (less than half that of the HVAF), a relatively infrequent cleaning cycle, and no fuel costs. The disadvantages include an inability to control gases and odors and the secondary pollution impact of the prefilter cleaning or disposal process.

4.3.2.3 Afterburners. An afterburner, as discussed in this document, means any exhaust gas incinerator used to control emissions of particulate matter. Afterburners are typically used to control combustible pollutants present in concentrations too dilute to support combustion unaided. Afterburners are used in asphalt roofing manufacturing plants to control emissions of gaseous hydrocarbons and organic particulates from the saturator, wet looper, coater, asphalt storage tanks, and asphalt blowing stills. For asphalt blowing stills, only afterburners or some other type of combustion device are known to be used as the final control device.

Afterburners are classified as either thermal (i.e., direct flame) or catalytic. The primary advantage of catalytic afterburners is that they use much less supplemental fuel than an equivalent thermal afterburner. Catalytic afterburners are not used or recommended for control of hydrocarbon emissions from asphalt roofing plants because the catalyst is subject to rapid poisoning and plugging due to constituents of the fumes from asphalt processes.[15]

Thermal afterburners destroy combustible pollutants through oxidation to CO_2 and water. Temperatures of 650° to 760°C (1200° to 1400°F), maintained for 0.1 to 0.3 seconds of fume residence time, are sufficient to obtain nearly complete oxidation of most combustible pollutants.[15] Destruction of most hydrocarbons occurs rapidly at 593° to 649°C (1100° to 1200°F), but destruction of some organic compounds, such as methane, and the oxidation of CO to CO_2 requires longer residence times and higher temperatures. Temperatures of 760° to 816°C (1400° to 1500°F) may be required if the methane content of the hydrocarbon is over 1000 ppm.[15] Large droplets (50 to 100 μm) require longer residence

times at the above temperatures; however, these large droplets are also easily removed in simple cyclones and knockout vessels.[15]

The steps involved in dilute fume incineration are shown schematically in Figure 4-7. As shown in the figure, part of the fume stream is sometimes bypassed around the fuel combustion process to preclude flame quenching and combustion instability. In the case of exhaust streams containing emissions from asphalt blowing, it is common to use only outside air in the combustion of fuel, since burner fouling is a problem. For other asphalt roofing processes, burner fouling seems to be less of a problem, and the fume stream is often used as a major source of combustion air. The fume not used for combustion must then be mixed with the hot combustion products to give a uniform temperature to all fume flowing through the afterburner. This mixing should be done as rapidly as possible without causing flame quenching so that sufficient residence time can be provided at the required temperature. Temperature and residence time are somewhat interchangeable; a higher temperature allows use of a shorter residence time and vice versa. This is illustrated in Figure 4-8, which indicates that, for a 0.1-second residence time, the efficiency of pollutant oxidation varies from 90 percent at 666°C (1231°F) to 100 percent at 725°C (1337°F). For a 1.0-second residence time, the efficiency varies from 90 percent at 623°C (1153°F) to 100 percent at 666°C (1231°F).

The typical effect of operating temperature on the effectiveness of thermal afterburner destruction of hydrocarbons is shown in Figure 4-9. The figure shows that the efficiency of hydrocarbon destruction varies from about 90 percent to almost 100 percent over a temperature range of about 677° to 760°C (1250° to 1400°F). For a given level of pollutant destruction for different afterburner designs, the major factor that influences the residence time required at a given operating temperature [above about 538°C (1000°F)] is the effectiveness with which the fume is mixed with the combustion products. If hydrocarbons are present in the exhaust gas of any afterburner operating at a nominal combustion chamber temperature above 760°C (1400°F) [or above 649°C (1200°F) for all but a few hydrocarbons], it is due to poor mixing and nonuniform treatment of the fume stream or too short residence time of the fume at temperature.

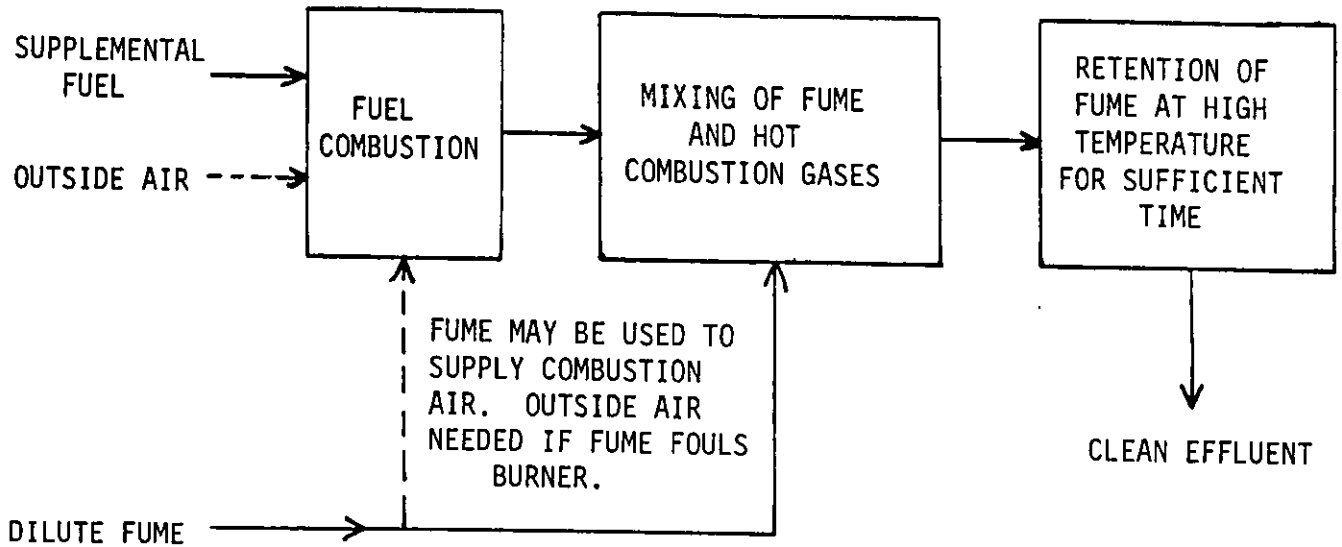

Figure 4-7. Steps required for successful incineration of combustible dilute fumes in a thermal afterburner.[15]

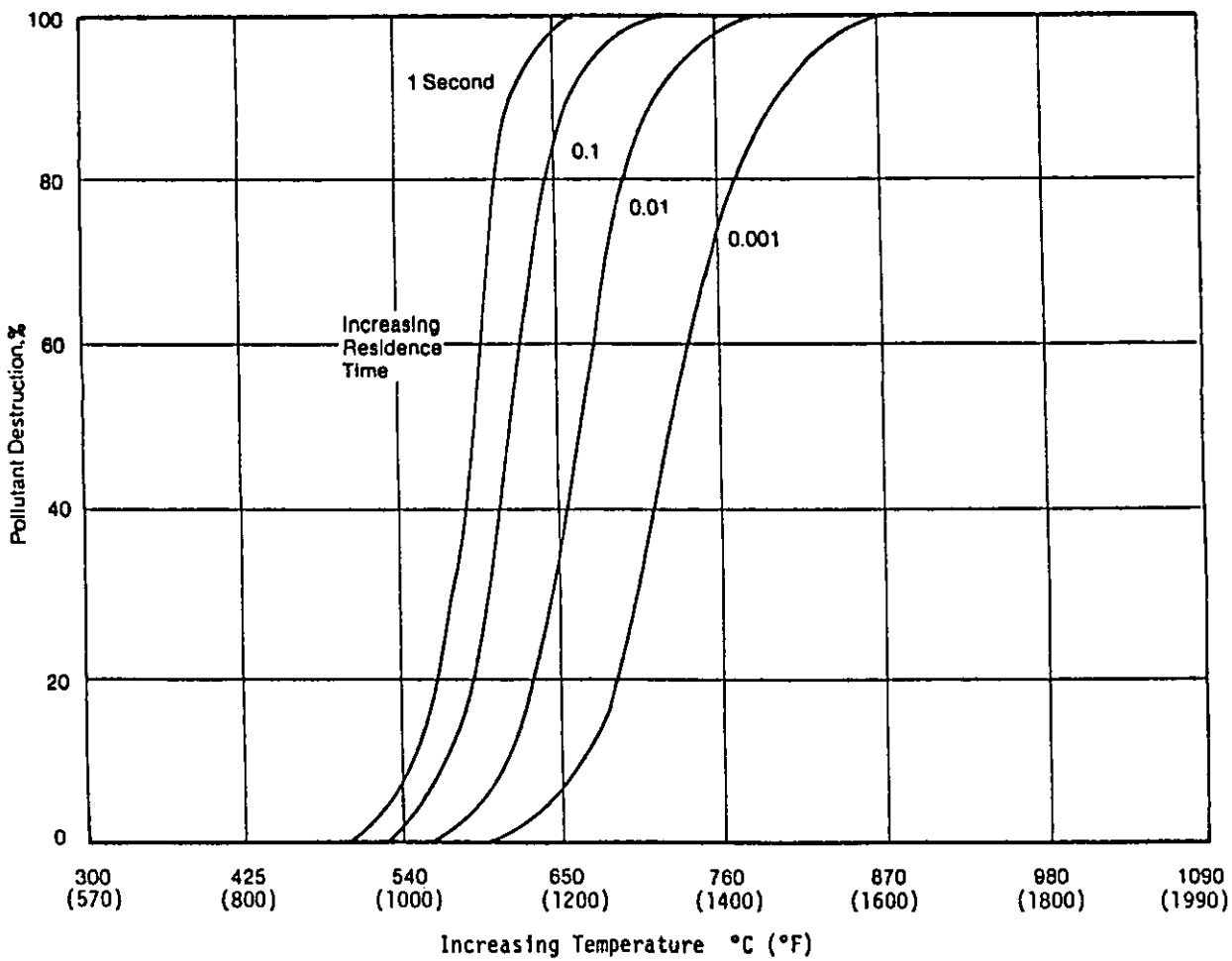

Figure 4-8. Coupled effects of time and temperature on rate of pollutant oxidation.[15]

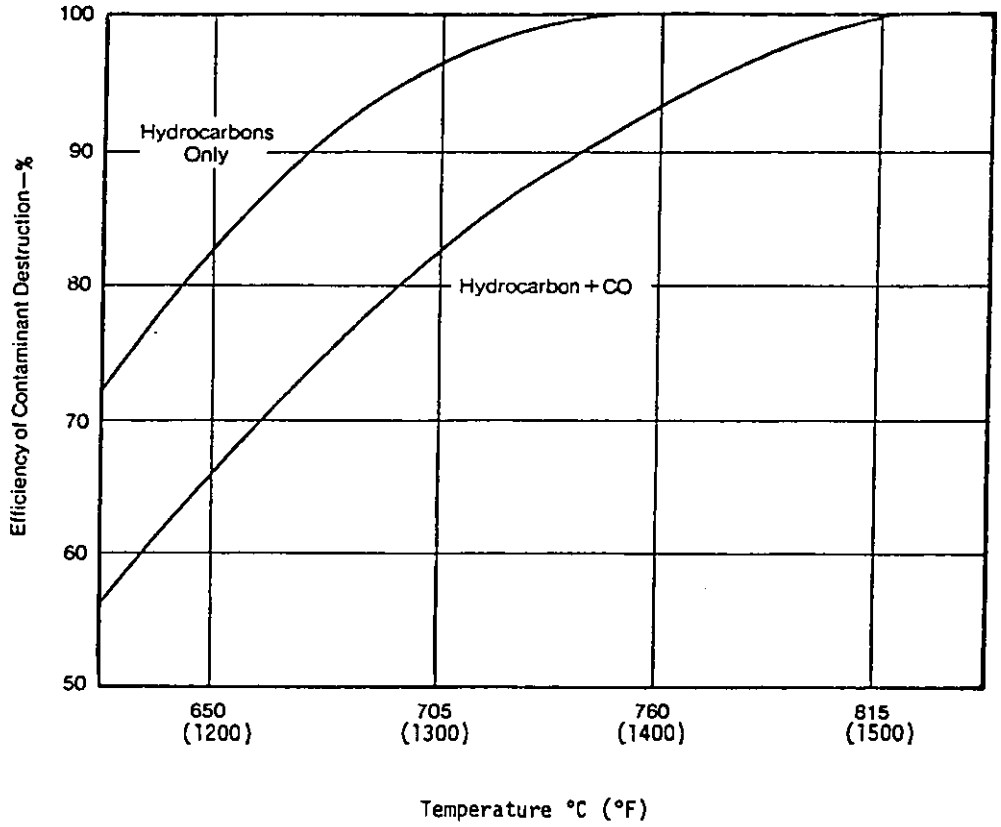

Figure 4-9. Typical effect of operating temperature on effectiveness of thermal afterburner for destruction of hydrocarbons and carbon monoxide.[15]

Typically, afterburners are designed with average residence times which vary from 0.1 to 0.5 seconds, but the amount of time required to raise the cold fume up to the desired temperature often exceeds this average residence time. Also, not all portions of the fume are in the combustion chamber an equal amount of time; some portions are swept out very quickly while others are retained for an appreciable time. The variation in residence time, which is a function of flow patterns in the combustion chamber, can appreciably affect afterburner performance. In practice, operating personnel compensate for deficiencies in design by increasing the operating temperature of the thermal afterburners during the startup phase until a temperature is reached which produces the desired pollutant destruction.

Little maintenance is required on most thermal afterburners. The main operating problems involve safety controls, erosion or cracking of refractory linings, heat exchanger fouling, or mechanical failure and bearing failure in the fans.

The major distinguishing feature of thermal afterburners, as compared to noncombustion control techniques for hydrocarbons, is the use of fuel. Because exhaust gases from the afterburner are typically at 649° to 816°C (1200° to 1500°F), many asphalt roofing plants use heat exchangers to recover the waste heat. This recovered waste heat may be used for many of the plant processes.

Thermal afterburners, like all combustion sources, have the potential for generating secondary pollutants due to oxidation of nitrogen, sulfur, and metals in the fume or fuel. Thermal afterburners, in comparison with power plant boilers and industrial furnaces, should have lower NO_x emissions because of their lower operating temperatures. The low operating temperatures and dilution of combustion products by excess air and fume results in a NO_x effluent concentration of 5 to 15 ppm when controlling saturator emissions.[16] Emissions of SO_2 depend on the sulfur content of the fuel burned and on the sulfur content of the fume because almost 100 percent of this sulfur will be converted to SO_2.

4.3.2.4 Electrostatic Precipitators (ESP). Low voltage electrostatic precipitators (ESP) can be used to control inorganic and hydrocarbon particulate mass emissions from asphalt saturators, wet loopers, and

coaters. Initial applications of ESP for control of emissions from these sources resulted in high maintenance costs due to the design of the ESP. Common problems included the need for frequent shutdown to clean the sticky asphalt from the ESP components, failure of power packs which cause shutdown of entire ESP units, and ionizer wire breakage.[1] To overcome these problems, one manufacturer introduced a modular electrostatic precipitator. The modular electrostatic precipitator concept is illustrated in Figures 4-10 and 4-11. The basic building block of the modular ESP incorporates a prefilter, ionizer, collecting cell, afterfilter, and a solid-state power pack in a self-contained unit. The collecting components slide out for easy cleaning. The contaminated air stream first passes through the mechanical prefilter, which consists of a fiber glass mat or a continuous self-cleaning metallic filter, to remove the larger particulates. A single large prefilter is generally used in the roofing industry rather than the modular type shown in Figures 4-10 and 4-11. The contaminated stream next passes through an ionizer section where it is subjected to an intense electrostatic field (12,000 volts) resulting in an electrical charge being imparted to the particles. The ionized particles are then collected on oppositely charged plates in the collecting cell. The function of the afterfilter is to aid in air distribution and to prevent reentrainment of any particulate draining off the collecting cells. The liquids collected on the plates and afterfilter are drained to a sump and recovered. In this design each module has its own power supply; therefore, a power pack failure will affect only one module. Modules can be removed individually for cleaning or servicing without shutting down the ESP. Because the individual module components can be submerged in a detergent or solvent bath for washing, the potential exists for more effective cleaning; thus, the design efficiency can be maintained.

The variables which affect the collection efficiency of the low voltage ESP are particle size, particle resistivity, area of the collecting electrodes, gas temperature, and gas velocity.[20]

The larger particles are easier to collect. High resistivity particles can form an insulating layer on the surface of the collecting electrode. If this happens, the particles will leave the electrode and reenter the

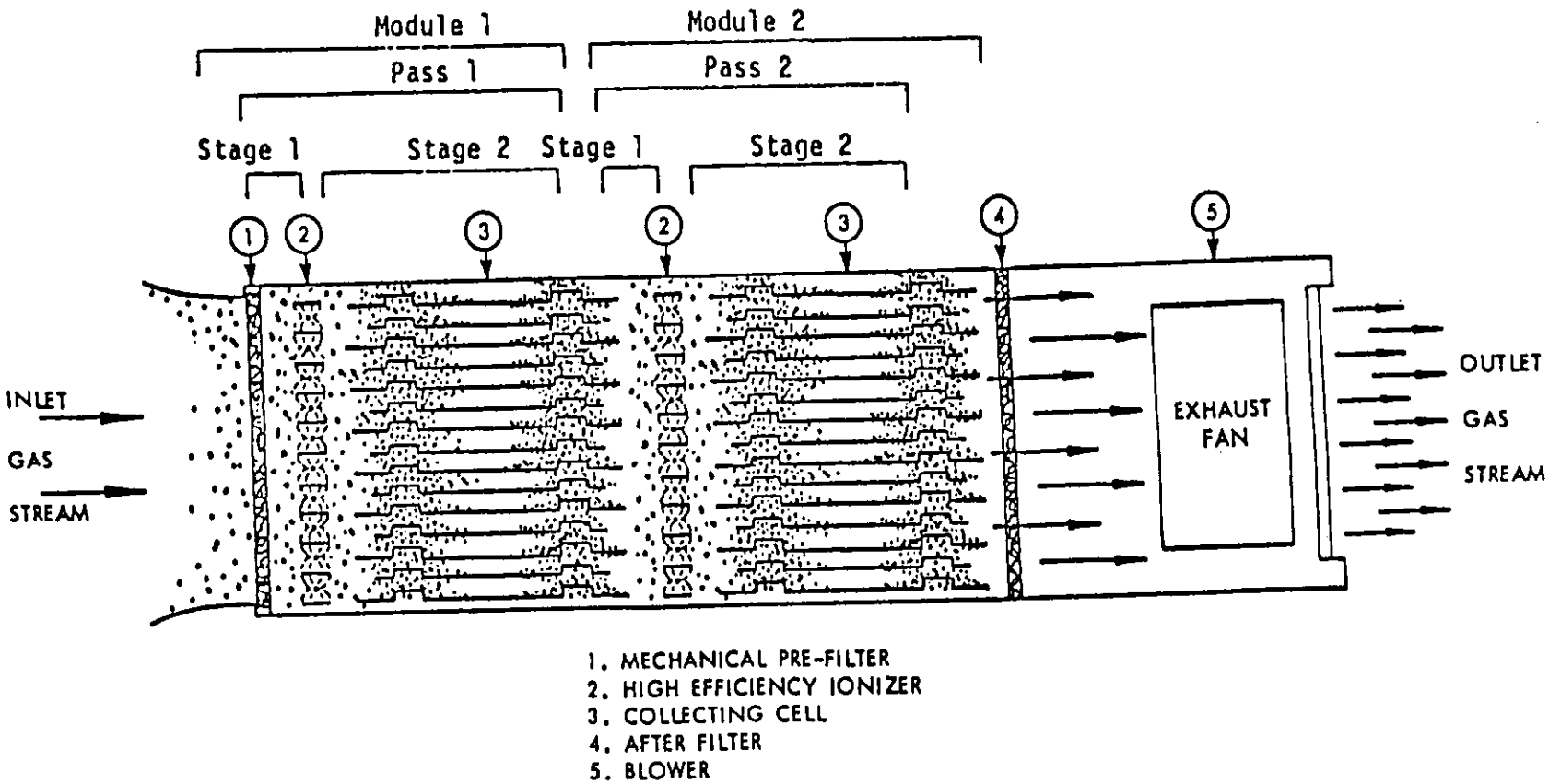

Figure 4-10. Schematic of a two-pass modular electrostatic precipitator.[17]

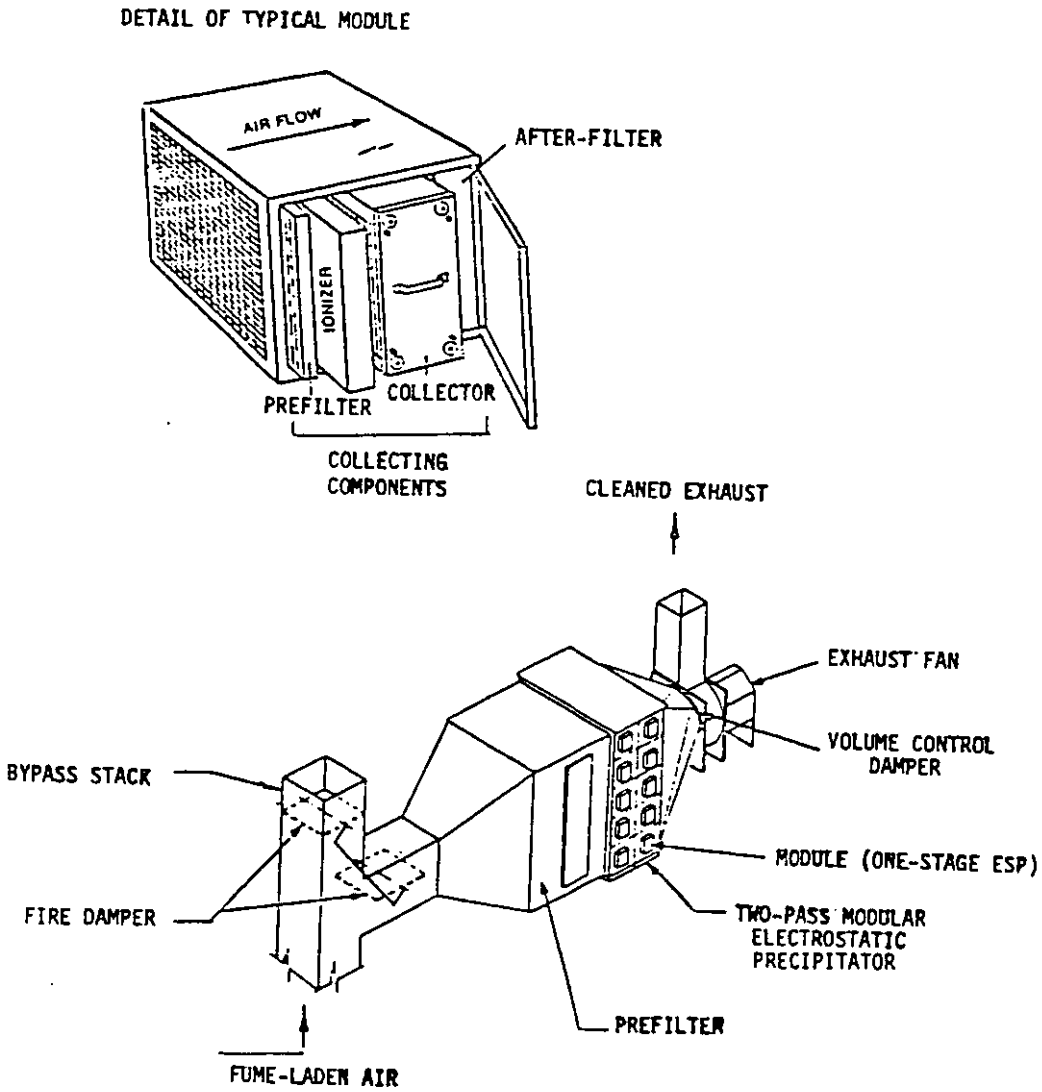

Figure 4-11. Modular electrostatic precipitator.[18,19]

gas stream. The area of the collecting electrodes is used in the calculations to determine the size and to predict the efficiency of the ESP. In organic liquid particulate, the fume temperature determines the percentage of the fume present as a particulate to be collected. The gas flow is critical; if the gas velocity exceeds the design gas velocity, some particles could be reintroduced in the gas stream. The effects of these variables are discussed in detail in the references.[20-22] One advantage of the modular ESP is that, to some extent, the above variables can be compensated for by adding more modules in series or in parallel. For example, the modular ESP shown in Figure 4-11 is a two-pass system since the gas must pass through two modules in series. Each module, in turn, is a two-stage precipitator because the fumes are ionized and collected sequentially (these operations are performed simultaneously in a single-stage precipitator).[18] Three-pass systems are sometimes used to control emissions from sources in the asphalt roofing industry.

In order to increase the efficiency of the ESP, precooling of the gas is recommended. Precooling can be accomplished by the use of dilution air, a prechamber using water sprays, or a shell and tube heat exchanger. The advantages and disadvantages of these three methods are discussed in detail in Section 4.3.2.1.

Advantages of the ESP are its low power consumption and low system pressure drop. Power requirements of the ESP are about 100 W maximum per 0.472 m^3/s (1,000 acf/min) of exhaust flow at a pressure drop of 50 to 150 Pa (0.2 in to 0.6 in.) of water.[18] A typical modular ESP installed at an asphalt roofing plant requires 22.4 kW (30 fan hp) to provide draft.[23]

Disadvantages of the modular ESP include lack of control of gaseous emissions; the problems associated with the handling and cleaning of the collecting components, disposal of the single-use prefilter, and cleaning of the reusable filter now in use at some installations. According to an industry source, a major disadvantage in the use of an ESP control system is the lack of expertise by plant engineering and maintenance personnel for installation and maintenance of the units.[24]

4.3.2.5 Fabric Filters. The handling of sand, talc, mineral stabilizer (filler), granules, and mica causes emissions of inorganic particulates during receiving, storage, transfer, and application operations. Emissions from those operations involving granules may be minimized by purchase of granules which have been washed and oiled (or dyed). Emissions involving the other materials are controlled by transfer within closed systems, capture of emissions at the area of application (via hoods or enclosures), and the venting of these emissions to fabric filter collectors.

Although tests of baghouses collecting these emissions at asphalt roofing plants were not performed, it is well documented that fabric filters used in other operations collecting dust from like materials have collection efficiencies in excess of 99 percent.[25] Outlet grain loadings, recorded during emission tests at several crushed stone facilities processing and handling a variety of types of rock seldom exceeded 2.28×10^{-5} kg/m^3 (0.01 gr/DSCF), and visible emissions from the baghouse stack were consistently zero.[26]

There are three basic designs used in fabric filter baghouse construction: the open pressure, the closed pressure, and the closed suction baghouse. The fans for both the open and closed pressure baghouses are located on the dirty gas side of the system. The fan for the closed suction baghouse is located on the discharge or clean side of the baghouse. There are two major bag shapes, the envelope and the tube, and they are constructed of woven cloth or felted cloth. Several materials are used: wool, cotton, synthetics, and fiber glass.

There are several methods of cleaning filter cloths in a baghouse. Fabric flexing and reverse air flow through the bag are the two general methods of bag cleaning. Manual shaking, mechanical shaking, and air shaking are the three methods considered as fabric flexing. Air shaking can be accomplished four ways: air bubbling, jet pulsing, reverse air flexing, and sonic vibration. Reverse air flow is divided into three methods: repressuring cleaning, atmospheric cleaning, and reverse jet cleaning. Typical air to cloth ratios in conventional baghouses vary from 0.5 to 1.0 m^3/s/m^2 (1.0 to 2.0 ft^3/min/ft^2) for fumes.

4.4 PERFORMANCE OF EMISSION CONTROL SYSTEMS

Data from tests performed by local agencies or plant owners cannot, in general, be correlated with the data from EPA test methods for asphalt roofing plants. Also, process data, test methods, and sample analysis methods are not generally described in local agency or plant owner reports. However, in this section, discussion concerning performance of control systems is based on those tests performed as a part of this study and on tests conducted by an industry source using EPA Test Method 26.

Tables 4-4, 4-5, 4-6, and 4-7 present a summary of emission data obtained during this study by measurement of emissions at asphalt roofing plants using various control systems. Analysis of the data in Tables 4-4, 4-5, and 4-6 shows that the average particulate inlet loadings for the saturators at plants A, B, C, and D were 0.238, 0.327, 1.57, and 0.16 kg/Mg of shingle (0.475, 0.653, 3.143 and 0.32 lb/ton) respectively, while the average production rates were 27.8, 37.0, 19.1, and 43.3 Mg/h (30.7, 40.8, 21.0, and 47.7 tons/h) respectively. Plant A has a dip saturator which is enclosed along with the wet looper and coater in a boxlike structure with removable doors. Emissions are ducted to two electrostatic precipitators for control. Plant B has a dip saturator which, along with the wet looper and coater, is surrounded by a large enclosure with sliding doors. One surge tank and six asphalt storage tanks are vented to one afterburner with part of the emissions from the above enclosure; another afterburner controls the rest of the emissions from the saturator, wet looper, and coater. Plant C has a spray-dip saturator enclosed along with the wet looper and coater; the enclosure has vertical sliding doors. The emissions from this enclosure are ducted to a HVAF for control. Plant D has a dip saturator and wet looper enclosed by a hood with an opening extending to about 6 feet above the floor. The emissions from the coater are ducted to another HVAF for control and were not sampled. Plants A, C, and D would be expected to generate similar quantities of pollutants; Plant B might be expected to have higher emissions since the surge tank and storage tank emissions are ducted together with the asphalt line emissions.

No mini-HVAF units were tested. However, comparable efficiencies should be achievable with the mini-HVAF under similar operating procedures.

TABLE 4-4. EPA TEST DATA AT ASPHALT ROOFING PLANT A (METRIC)
SOURCE: SATURATOR; CONTROL: ELECTROSTATIC PRECIPITATOR (ESP)

Measurement parameter	Inlet	Outlet 1	Outlet 2	Total outlet
Particulate				
g/Nm^3	0.1494	0.0117	0.0089	0.0103
g/m^3	0.1300	0.0101	0.0076	0.0089
kg/h	6.7585	0.2585	0.1814	0.4399
kg/Mg shingle	0.2380	0.0190	0.0130	0.0160
kg/Mg felt	2.0270	0.1580	0.1110	0.1350
Gaseous hydrocarbon				
g/Nm^3	0.0279	0.0304	0.0332	0.0318
kg/h	1.2383	0.6713	0.6849	1.3562
kg/Mg shingle	0.0450	0.0480	0.0490	0.0485
kg/Mg felt	0.3800	0.4100	0.4200	0.4150
Combined particulate and hydrocarbon (HC)				
g/Nm^3	0.1785	0.0412	0.0421	0.0416
kg/h	7.8562	0.9299	0.8663	1.7962
kg/Mg shingle	0.2800	0.0670	0.0620	0.0645
kg/Mg felt	2.40	0.5700	0.5300	0.5500
Polycyclic organic matter (POM)				
g/Nm^3	13.0700	--	--	6.3600
kg/h	5.8513	--	--	2.6853
Control eff. %--particulate	--	92.20	94.50	93.35
HC	--	Neg.	Neg.	Neg.
Combined particulate + HC	--	76.30	77.90	77.10
POM				54.10
Volume flow rates:				
Nm^3/s	12.33	6.12	5.72	11.84
m^3/s	14.14	7.14	6.64	13.78
Fume temp.--°C	52	58	57	58 (Avg.)
Control device temp.--°C		52		
Line speed particulate runs--m/s		1.77		
Felt width--cm		91.44		
Shingle production rate--Mg/h		27.85		
Felt usage rate--Mg/h		3.27		

TABLE 4-4a. EPA TEST DATA AT ASPHALT ROOFING PLANT A (ENGLISH)
SOURCE: SATURATOR
CONTROL: ELECTROSTATIC PRECIPITATOR (ESP)

Measurement parameter	Inlet	Outlet 1	Outlet 2	Total outlet
Particulate				
gr/DSCF	0.0653	0.0051	0.0039	0.0045
gr/acf	0.0568	0.0044	0.0033	0.0039
lb/h	14.5900	0.5700	0.4000	0.9700
lb/ton shingle	0.4750	0.0370	0.0260	0.0320
lb/ton felt	4.0530	0.3160	0.2220	0.2690
Gaseous hydrocarbon				
gr/DSCF	0.0122	0.0133	0.0145	0.0139
lb/h	2.7300	1.4800	1.5100	2.9900
lb/ton shingle	0.0890	0.0960	0.0980	0.0970
lb/ton felt	0.7580	0.8220	0.8380	0.8310
Combined particulate and hydrocarbon (HC)				
gr/DSCF	0.0780	0.0180	0.0184	0.0182
lb/h	17.3200	2.0500	1.9100	3.9600
lb/ton shingle	0.5640	0.1340	0.1240	0.1290
lb/ton felt	4.8110	1.1380	1.0620	1.1000
Polycyclic organic matter (POM)				
gr/DSCFx10^{-6}	5.71	--	--	2.78
lb/hx10^{-3}	12.90	--	--	5.92
Control eff. %--particulate	--	92.20	94.50	93.35
HC	--	Neg.	Neg.	Neg.
Combined particulate + HC	--	76.30	77.90	77.10
POM	--	--	--	54.10
Volume flow rates DSCFM	26,131	12,975	12,114	25,089
acfm	29,959	15,120	14,074	29,194
Fume temp.--°F	126	136	135	136
Control device temp.--°F		126		
Line speed particulate runs--ft/min		348		
Felt width--in.		36		
Shingle production rate--tons/h			30.70	
Felt usage rate--tons/h		3.60		

TABLE 4-5. EPA TEST DATA AT ASPHALT ROOFING PLANT B (METRIC)
SOURCES - SATURATOR AND STORAGE TANKS
CONTROL - AFTERBURNER

Measurement parameter	Inlet 1	Outlet 1	Inlet 2	Outlet 2	Total in	Total out	Storage tanks
Particulate							
g/Nm^3	0.4119	0.0549	0.6018[a]	0.0229	0.5080	0.0389	0.0776
g/m	0.3318	0.0275	0.4554	0.0114	0.3936	0.0183	--
kg/h	5.4880	1.2250	7.0760	0.4990	12.565	1.724	1.00
kg/Mg shingle					0.3270	0.0450	--
kg/Mg felt					2.7700	0.3800	--
Gaseous hydrocarbon							
g/Nm^3	0.048	0.030[b]	0.089	0.050	0.069	0.041	--
kg/h	0.617	0.689	0.993	1.089	1.610	1.778	0.331
kg/Mg shingle	0.032	0.036	0.052	0.057	0.042	0.046	--
kg/Mg felt	0.272	0.304	0.438	0.240	0.355	0.392	--
Combined particulate and hydrocarbon (HC)							
g/Nm^3	0.460	0.085	0.691	0.073	0.577	0.080	--
kg/h	5.942	1.914	8.074	1.588	14.197	3.502	1.329
kg/Mg shingle	0.310	0.100	0.420	0.083	0.369	0.091	--
kg/Mg felt	2.620	0.844	3.560	0.700	3.130	0.770	--
Polycyclic organic matter (POM)							
$g/Nm^3 \times 10^{-3}$	0.924	1.021	--	--	--	--	--
$kg/h \times 10^{-3}$	12.20	23.179	--	--	--	--	--

TABLE 4-5. EPA TEST DATA AT ASPHALT ROOFING PLANT B (METRIC)
SOURCES - SATURATOR AND STORAGE TANKS
CONTROL - AFTERBURNER
(concluded)

Measurement parameter	Inlet 1	Outlet 1	Inlet 2	Outlet 2	Total in	Total out	Storage tanks
Aldehydes							
kg/h	--	--	0.153	0.43	--	--	--
Control eff. %--							
Particulate	--	77.60	--	92.90	--	86.30	--
HC	--	Neg.	--	1.60	--	Neg.	--
Combined particulate + HC	--	67.20	--	80.70	--	74.80	--
Volume flow rates							
Nm^3/s	3.72	6.38	3.19	6.13	6.91	12.52	0.38
m^3/s	4.66	12.49	4.25	13.88	8.92	26.37	0.43
Fume temp.--°C	102	281	95	364	98	322	--
Combustion temp.--°C		538	649				
Line speed particulate runs--m/s		1.69					
Felt width--cm		124.50					
Shingle production rate--Mg/h		37.00					
Felt usage rate--Mg/h		4.30					

[a]Results of one particulate run (of three) on the control device inlet were deleted because catch was excessive.
[b]Results of one gaseous HC run (of three) on the control device outlets were deleted.

TABLE 4-5a. EPA TEST DATA AT ASPHALT ROOFING PLANT B (ENGLISH)
SOURCES: SATURATOR AND STORAGE TANKS
CONTROL: AFTERBURNER

Measurement parameter	Inlet 1	Outlet 1	Inlet 2	Outlet 2	Total in	Total out	Storage tanks
Particulate							
gr/dscf	0.180	0.024	0.263[a]	0.010	0.222	0.017	0.0339
gr/acf	0.145	0.012	0.199	0.005	0.172	0.008	--
lb/h	12.100	2.700	15.600	1.100	27.700	3.800	2.20
lb/ton shingle	0.571	0.127	0.736	0.052	0.653	0.090	--
lb/ton felt	4.850	1.080	6.240	0.440	5.540	0.760	--
Gaseous hydrocarbon							
gr/dscf	0.021	0.013[b]	0.039	0.022	0.030	0.018	--
lb/h	1.360	1.520	2.190	2.400	3.550	3.920	0.73
lb/ton shingle	0.064	0.072	0.103	0.113	0.084	0.092	--
lb/ton felt	0.544	0.608	0.876	0.480	0.710	0.784	--
Combined particulate and hydrocarbon (HC)							
gr/dscf	0.201	0.037	0.302	0.032	0.252	0.035	--
lb/h	13.100	4.220	17.800	3.500	31.300	7.720	2.93
lb/ton shingle	0.620	0.199	0.840	0.165	0.738	0.182	--
lb/ton felt	5.240	1.688	7.120	1.400	6.260	1.540	--
Polycyclic organic matter (POM)							
gr/dscfx10^{-6}	404	446	--	--	--	--	--
lb/hx10^{-3}	26.90	51.10	--	--	--	--	--

TABLE 4-5a. EPA TEST DATA AT ASPHALT ROOFING PLANT B (ENGLISH)
SOURCES: SATURATOR AND STORAGE TANKS
CONTROL: AFTERBURNER
(concluded)

Measurement parameter	Inlet 1	Outlet 1	Inlet 2	Outlet 2	Total in	Total out	Storage tanks
Aldehydes							
lb/h	--	--	0.337	0.950	--	--	--
Control eff. %--							
particulate	--	77.6	--	92.9	--	86.30	--
HC	--	Neg.	--	1.60	--	Neg.	--
Combined particulate + HC	--	67.20	--	80.70	--	74.80	--
Volume flow rates							
DSCFM	7,883	13,538	6,768	12,995	14,651	26,533	796
acfm	9,884	26,466	9,010	29,412	18,894	55,878	911
Fume temp.--°F	215	537	203	687	209	612	--
Combustion temp.--°F	1,000		1,200				
Line speed particulate runs--ft/min	333						
Felt width--in.	49						
Shingle production rate--tons/h	40.80						
Felt usage rate--tons/h	4.74						

[a]Results of one particulate run (of three) on the control device inlet were deleted because catch was excessive.
[b]Results of one gaseous HC run (of three) on the control device outlets were deleted.

TABLE 4-6. EPA TEST DATA AT ASPHALT ROOFING PLANTS C AND D (METRIC)
SOURCE: PLANT C - SATURATOR AND STORAGE TANKS
PLANT D - SATURATOR
CONTROL: HIGH VELOCITY AIR FILTER

Measurement parameter	Plant C Inlet	Plant C Outlet	Plant D Inlet	Plant D Outlet
Particulate				
g/Nm^3	0.9565	0.0160	0.1442	0.0297
g/m^3	0.8146	0.0137	--	--
kg/h	29.94	0.50	6.93	1.53
kg/Mg shingle	1.5700	0.0270	0.1600	0.0350
kg/Mg felt	--	--	1.2500	0.2800
Gaseous hydrocarbon				
g/Nm^3	0.0778	0.0915	--	--
kg/h	2.42	3.02	--	2.05
kg/Mg shingle	0.1300	0.1600	--	0.047
kg/Mg felt	--	--	--	0.370
Combined particulate and hydrocarbon (HC)				
g/Nm^3	1.0343	0.1075	--	--
kg/h	32.36	3.52	--	3.57
kg/Mg shingle	1.7000	0.1800	--	0.087
kg/Mg felt	--	--	--	0.640
Polycyclic organic matter (POM)				
$g/Nm^3 x10^{-3}$	1.226	0.103	--	--
$kg/h x10^{-3}$	40.05	3.58	--	--
Sulfur dioxide (SO_2)				
$g/Nm^3 x10^{-3}$	--	14.370	--	--
kg/h	--	0.485	--	--
Control Eff. %--particulate	--	98.30	--	77.90
HC	--	Neg.	--	a
Combined particulate + HC	--	89.10	--	60.70[a]
POM	--	80.40	--	--
Volume flow rates:				
Nm^3/s	8.71	9.29	13.27	13.89
m^3/s	10.21	10.66	--	--

TABLE 4-6. EPA TEST DATA AT ASPHALT ROOFING PLANTS C AND D (METRIC)
SOURCE: PLANT C - SATURATOR AND STORAGE TANKS
PLANT D - SATURATOR
CONTROL: HIGH VELOCITY AIR FILTER
(concluded)

Measurement parameter	Plant C Inlet	Plant C Outlet	Plant D Inlet	Plant D Outlet
Fume temp.--°C	61	52	69	74
Control device temp.--°C	43		69	
Line speed particulate runs--m/s	1.16		2.00	
Felt width--cm	91.44		121.90	
Shingle production rate--Mg/h	19.05		43.27	
Felt usage rate--Mg/h	--		5.53	

[a]Since gaseous HC was not measured at the control device inlet, its ability to control gaseous HC could not be estimated. Overall control efficiency was estimated using the assumption that gaseous HC would neither increase nor decrease across the control device.

TABLE 4-6a. EPA TEST DATA AT ASPHALT ROOFING PLANTS C AND D (ENGLISH)
SOURCE: PLANT C - SATURATOR AND STORAGE TANKS
PLANT D - SATURATOR
CONTROL: HIGH VELOCITY AIR FILTER

Measurement parameter	Plant C Inlet	Plant C Outlet	Plant D Inlet	Plant D Outlet
Particulate				
gr/DSCF	0.418	0.007	0.063	0.013
gr/acf	0.356	0.006	--	--
lb/h	66.000	1.110	15.270	3.370
lb/ton shingle	3.143	0.053	0.320	0.071
lb/ton felt	--	--	2.503	0.552
Gaseous hydrocarbon				
gr/DSCF	0.034	0.040	--	--
lb/h	5.340	6.650	--	4.510
lb/ton shingle	0.254	0.317	--	0.095
lb/ton felt	--	--	--	0.739
Combined particulate and hydrocarbon (HC)				
gr/DSCF	0.452	0.047	--	--
lb/h	71.340	7.760	--	7.880
lb/ton shingle	3.397	0.370	--	0.165
lb/ton felt	--	--	--	1.292
Polycyclic organic matter (POM)				
gr/DSCFx 10^{-6}	536.00	44.90	--	--
lb/hx10^{-3}	88.30	7.89	--	--
Sulfur dioxide (SO_2)				
gr/DSCFx10^{-3}	--	6.28	--	--
lb/h	--	1.07	--	--
Control eff. %--particulate	--	98.30	--	77.90
HC	--	Neg	--	a
Combined particulate + HC	--	89.10	--	60.70[a]
POM	--	80.40	--	--
Volume flow rates				
DSCFM	18,462	19,681	28,118	29,437
acfm	21,636	22,596	--	--

TABLE 4-6a. EPA TEST DATA AT ASPHALT ROOFING PLANTS C AND D (ENGLISH)
SOURCE: PLANT C - SATURATOR AND STORAGE TANKS
PLANT D - SATURATOR
CONTROL: HIGH VELOCITY AIR FILTER
(concluded)

Measurement parameter	Plant C Inlet	Plant C Outlet	Plant D Inlet	Plant D Outlet
Fume temp.--°C	142	126	156	166
Control device temp.--°F	109		156	
Line speed particulate runs--ft/min	251		395	
Felt width--in.	36		48	
Shingle production rate--tons/h	21.00		47.70	
Felt usage rate--tons/h	--		6.10	

[a]Since gaseous HC was not measured at the control device inlet, its ability to control gaseous HC could not be estimated. Overall control efficiency was estimated using the assumption that gaseous HC would neither increase nor decrease across the control device.

TABLE 4-7. EPA TEST DATA AT ASPHALT ROOFING PLANT E (METRIC)
SOURCE: BLOWING STILLS
CONTROL: AFTERBURNER

Measurement parameter	Saturant asphalt Inlet	Saturant asphalt Outlet	Coating asphalt Inlet	Coating asphalt Outlet
Particulate				
g/Nm^3	27.87	0.364	33.41	0.210
g/m^3	10.47	0.185	13.52	0.117
kg/h	80.01	5.58	98.61	3.27
kg/Mg asphalt	3.30	0.230	12.21	0.405
Gaseous hydrocarbon				
g/Nm^3	5.180	0.021	4.391	0.043
kg/h	16.03	0.29	14.03	0.68
kg/Mg asphalt	0.662	0.012	1.740	0.085
Combined particulate and hydrocarbon (HC)				
g/Nm^3	33.071	0.385	37.80	0.253
kg/h	96.04	5.87	112.64	3.95
kg/Mg asphalt	3.962	0.242	13.95	0.490
Polycyclic organic matter (POM)				
$g/Nm^3 \times 10^{-3}$	--	--	113.75	0.075
kg/h	--	--	396.68	1.16
Aldehydes				
g/Nm^3	--	--	1.041	0.009
kg/h	--	--	0.35	0.01
Control eff. %--particulate	--	93.40	--	96.70
HC	--	98.30	--	95.20
Combined particulate + HC	--	94.20	--	96.50
POM	--	--	--	99.90
Aldehydes + HC	--	--	--	99.10
Volume flow rates:				
Nm^3/s	0.90	4.21	0.91	4.29
m^3/s	2.31	8.15	2.28	8.10
Fume temp.--°C	199	199	216	196
Combustion temp.--°C	816		816	

TABLE 4-7a. EPA TEST DATA AT ASPHALT ROOFING PLANT E (ENGLISH)
SOURCE: BLOWING STILLS
CONTROL: AFTERBURNER

Measurement parameter	Saturant asphalt Inlet	Saturant asphalt Outlet	Coating asphalt Inlet	Coating asphalt Outlet
Particulate				
gr/dscf	12.180	0.159	14.600	0.096
gr/acf	4.577	0.081	5.907	0.051
lb/h	176.400	12.300	217.400	7.200
lb/ton asphalt	6.607	0.461	24.427	0.809
Gaseous hydrocarbon				
gr/dscf	2.264	0.009	1.919	0.019
lb/h	35.330	0.650	30.940	1.510
lb/ton asphalt	1.323	0.024	3.476	0.170
Combined particulate and hydrocarbon (HC)				
gr/dscf	14.454	0.168	16.519	0.115
lb/h	211.730	12.950	248.340	8.710
lb/ton asphalt	7.930	0.485	27.903	0.979
Polycyclic organic matter (POM)				
gr/dscf$\times 10^{-6}$	--	--	49,708	32.76
lb/h$\times 10^{-3}$	--	--	815	2.55
Aldehydes				
gr/dscf	--	--	0.455	0.004
lb/h	--	--	0.780	0.024
Control eff. %--particulate	--	93.40	--	96.70
HC	--	98.30	--	95.20
Combined particulate + HC	--	94.20	--	96.50
POM	--	--	--	99.50
Aldehydes + HC	--	--	--	99.10
Volume flow rates:				
DSCFM	1,916	8,928	1,937	9,089
acfm	4,904	17,265	4,826	17,169
Fume temp.--°F	390	390	420	385
Combustion temp.--°F	1500		1500	

Four emission tests were conducted at plant A on the ESP controlling emissions from the saturator and coater. The results are depicted graphically in Figure 4-12. During the first emission test, a visible plume was observed from the outlet stacks of the ESP. This plume varied in opacity from 5 to 15 percent. After the first emission test was completed, the ESP was cleaned and minor maintenance performed. A visible plume was not observed during the last three emission tests. The collection efficiency for the first test was 88.3 percent. The average collection efficiency for the last three tests was 95.7 percent.

At Plant B the emissions from the two afterburners controlling emissions from the saturator and coater were measured. The results of the tests are displayed for each afterburner and for both afterburners combined in Figure 4-12. The afterburners were operated at different temperatures. The afterburner operating at 538°C (1000°F) had an average collection efficiency of 77.7 percent, and the afterburner operating at 649°C (1200°F) had an average efficiency of 95.2 percent. The emissions from the afterburner operating at 538°C (1000°F) were: 1.04 kg/h (2.3 lb/h), 1.32 kg/h (2.9 lb/h), and 1.36 kg/h (3.0 lb/h), for an average of 1.22 kg/h (2.7 lb/h). The emissions from the afterburner operating at 649°C (1200°F) were: 0.36 kg/h (0.8 lb/h), 0.41 kg/h (0.9 lb/h), and 0.68 kg/h (1.5 lb/h), for an average of 0.5 kg/h (1.1 lb/h).

Discussion on the performance of capture and control options are contained in the following paragraphs.

4.4.1 Performance of Capture Systems

The performance of capture systems varies greatly depending on the construction and operation of the system. Canopy enclosures used for the saturator, wet looper, and coater generally achieve poor capture whereas the total-enclosure hoods achieve very good emission capture when properly operated. Closed systems can provide very good capture of emissions from mineral products handling and storage and from asphalt truck unloading.

4.4.1.1 Capture Systems for Collecting Fumes from the Saturator, Wet Looper, and Coater. Data in Table 4-8 show that emissions from the hooded enclosures were generally visible almost 100 percent of the time and ranged up to 20 percent opacity. Fugitive emissions from the

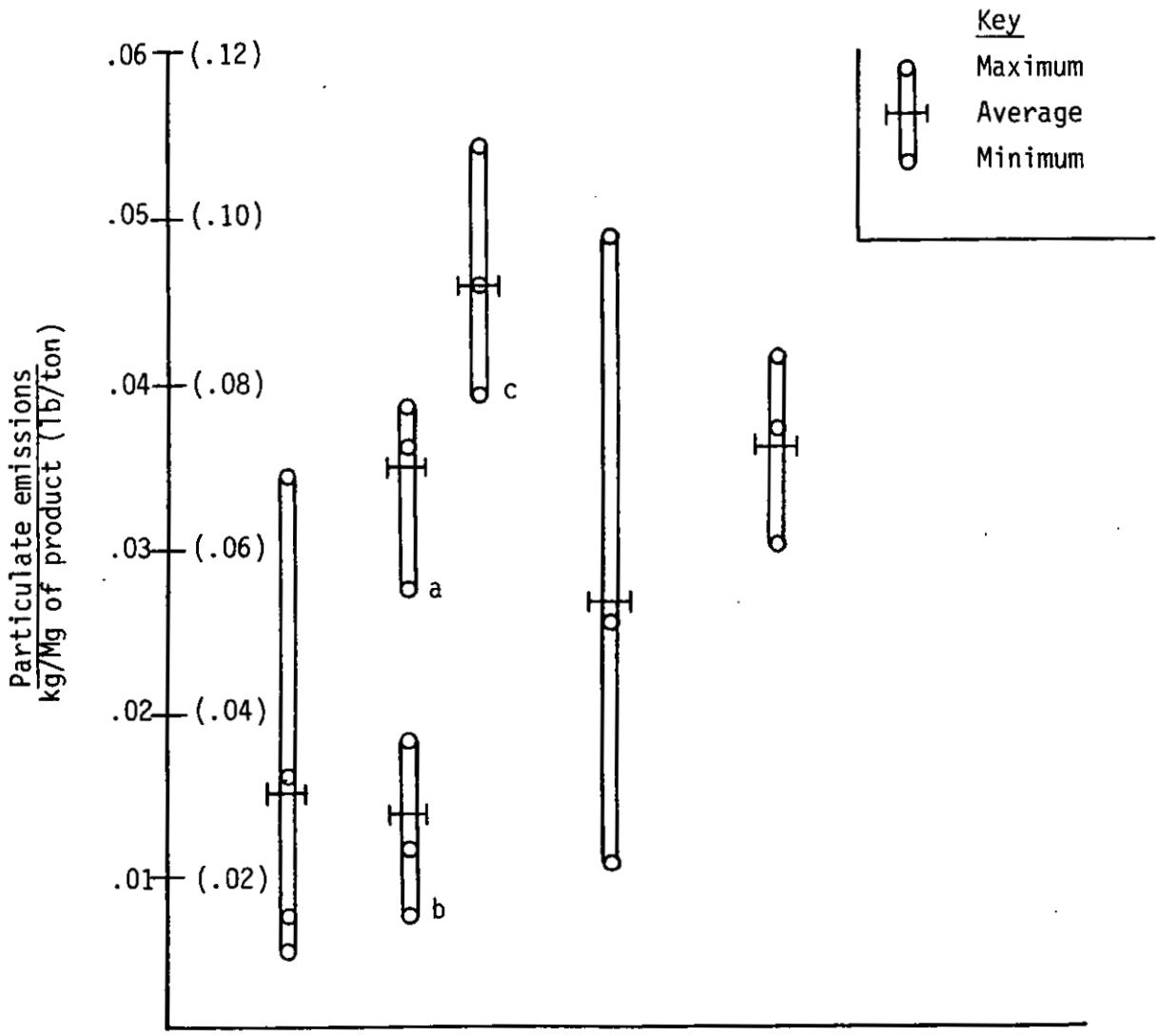

Plant	A	B	C	D
Emission source	S+C	S+C	S+C+T	S
Control devices	ESP	A/B (2)	HVAF + cooling system	HVAF
Avg. shingle production				
Mg/h	27.85	37.0	19.1	43.3
(tons/h)	(30.70)	(40.8)	(21.0)	(47.7)
Avg. removal eff. - %	92.2 and 94.5	77 and 95	98.3	78

[a]Emissions from one afterburner operating at 77 percent efficiency divided by total production rate.
[b]Emissions from one afterburner operating at 95 percent efficiency divided by total production rate.
[c]Total emissions from both parallel afterburners divided by total production rate.

Figure 4-12. Particulate emissions from asphalt roofing processes when various control devices are used (EPA tests).[43]

TABLE 4-8. SUMMARY OF FUGITIVE EMISSIONS DATA FROM CAPTURE SYSTEMS

Plant	Source	Number of observers	Total observation time (hours)	Emission location	Emissions: Type and color	Emissions: frequency	Opacity range percent[a]	Visible[b]	5% Opacity[b]	10% Opacity[b]	Comments
A	Asphalt saturator	2	12	Saturator and wet looper	None	N/A	0 0	0 0	0 0	0 0	Enclosure houses saturator and wet looper. Wet looper door open during tests. Coater hooded. Data recorded only during normal operation.
	Wet looper and coater	2	12	Coater	White fumes	Constant	10 5	100 100	100 100	100 0	
B	Asphalt saturator, wet looper, and coater	2	12	Top 1 ft of door openings	Gray fumes	Intermittent[c]	0-22 0-22	34 31	17 5	5 3	Enclosure houses saturator, wet looper, and coater. Coater door open during tests. Data recording halted only when line stopped.
C-1	Asphalt saturator	2	6	Saturator	White puffs	Intermittent	0-2 0-2.3	7 38	0 0	0 0	Enclosure houses saturator and wet looper. Coater hooded. Testing interrupted when more than one door in enclosure was open.
	Wet looper and coater	2	6	Coater	White fumes	Variable but constant	0.2-5.8 1.5-6.3	100 100	10 20	0 0	
C-2	HVAF, inlet duct	2	12	HVAF/duct interface	White puffs	Intermittent	0 0-14[f]	0 20	0 0	0 0	Ducting not tightly sealed at HVAF inlet.
D-1	Asphalt saturator	2	10.8	Coater end of hood	Gray fumes	Almost constant	0-15 0-10	98 93	52 39	2 2	Saturator, wet looper, and coater are hooded (no enclosure). Data recorded only during normal operation.
	Wet looper and coater	2	1.0	Top of hood (2 holes)	Gray fumes	Constant	20	100	100	100	
D-2	Asphalt unloading tanker transfer to storage tanks	2	6	Pipe connection	None	N/A	0	0	0	0	Tanker solid-coupled to piping through a flexible hose. Tanker hatch cover normally open 1-2 in. for venting.
				Hatch cover	Gray fumes	Intermittent[d]	0-10[e]	10	10	10	

[a]Range of opacities after data collated into 6-minute averages.
[b]Percent of total observation time opacities were visible, were 5 percent opacity or higher, or were 10 percent or higher.
[c]Emissions were visible only when doors were open. Unlike other tests, these were not halted when doors were open to correct process problems unless line was shut down.
[d]Emissions were visible only when hatch cover was open more than 1-2 in.
[e]Maximum opacity (30 percent) was experienced when hatch was opened fully for 2 min.
[f]Puffs lasted less than 15 s. Maximum opacity was 10 percent.

saturator, wet looper, and coater enclosures at plants tested are summarized in Table 4-8, and detailed data are reported in Appendix C. Fugitive emissions from the canopy hood capture system were generally less than 20 percent opacity while those from the enclosures were generally less than 10 percent opacity. At plants tested, the flow rates used for ventilation varied from about 7.08 Nm^3/s [15,000 dry standard cubic feet per minute (DSCFM)] for a full enclosure to about 14.16 Nm^3/s (30,000 DSCFM) for a hood. Since the 7.08 Nm^3/s (15,000 DSCFM) was measured with one door of the enclosure open (see Figure 4-1), it is probable that all emissions from the saturator, wet looper, and coater can be captured with exhaust ventilation rates of 4.7 Nm^3/s (10,000 DSCFM).

Fugitive emissions from the three total-enclosure hoods varied from 0 to 10 percent opacity. For the best hood observed, there were no visible emissions when all but one of the hood doors were closed. Emissions were light but constant when more than one door was open.

4.4.1.2 Capture Systems for Other Emission Sources. As discussed in Section 4.3.1, the systems used for the capture of emissions from asphalt blowing stills, asphalt storage and transfer systems, and the coater-mixer are primarily closed systems. Similarly, closed systems can be used to capture emissions from mineral products delivery, storage and transfer, and asphalt truck unloading. If properly installed and maintained, closed systems provide 100 percent capture of all potential emissions. Visible emissions were tested at one asphalt roofing plant while asphalt was being unloaded. The results of the emission testing showed that the capture system for asphalt unloading was performing effectively and visible emissions were not observed.

Tests were not performed on systems designed to capture emissions from mineral surfacing and granule application areas. The development by the industry of capture systems for inorganic particulate has received less attention than those for asphalt fume. None of the systems currently in use appear to perform adequately. However, the mineral surfacing and granule application areas are located inside the plant building and do not appear to discharge any material to the atmosphere.

4.4.2 Performance of High Velocity Air Filter (HVAF) Systems

Two HVAF units were tested. The HVAF at Facility C controlled emissions from a "spray and dip" type saturator, coater, wet looper, and storage tanks for an asphalt roofing plant operating at an average production rate of 19.1 Mg/h (21 tons/h) of shingles. The control system incorporated water sprays to precool the inlet gases to the HVAF to about 49°C (120°F) and an automated system, based on pressure drop, to advance the filter mat. This system operated with an average particulate removal efficiency of 98.3 percent based on an average inlet loading of 29.95 kg/h (66.0 lb/h) and an outlet loading of 0.50 kg/h (1.11 lb/h). Controlled emissions averaged 0.026 kg/Mg (0.053 lb/ton) of product, as shown for Plant C in Figure 4-12. Visible emissions from the stack of the control device varied from 0 to 5 percent opacity, as shown in Table 4-9.

The second HVAF unit controlled emissions from a dip saturator for an asphalt roofing plant operating at an average production rate of 43.3 Mg/h (47.7 tons/h) of shingles (Plant D). No precooling was used, and the average temperature of the inlet gases to the HVAF was about 69°C (156°F). The filter mat was advanced by a timer. This system operated with an average particulate removal efficiency of 78 percent based on an average inlet loading of 6.94 kg/h (15.3 lb/h) and an outlet loading of 1.54 kg/h (3.4 lb/h). Controlled emissions averaged 0.035 kg/Mg (0.07 lb/ton) of product, as shown for Plant D in Figure 4-12. Visible emissions from the stack of the control device were about 15 percent opacity as shown in Table 4-9.

There are several possible reasons why the HVAF unit at Plant D had a lower particulate removal efficiency than the HVAF unit at Plant C. These reasons are discussed below.

1. The timed advancement of the filter mat at Plant D could result in reduced efficiency. As explained in Section 4.3.2.1, advancement of too much filter material or advancement of the filter too frequently will result in decreased collection efficiency due to excessive exposure of "uncaked" filter media and the resulting low pressure drop across the filter. This condition can also occur if filter advance continues while

TABLE 4-9. SUMMARY OF VISIBLE EMISSION TESTS - CONTROL DEVICE STACK OUTLET[27]

Plant ID	Process source	Control device[a]	No. of stacks	Stack No.	No. of obs.	Total msmt. time (hrs)	Percent time visible emissions exceeded listed opacities[b]					
							0	5	10	15	20	Opacity range
A	Saturator	ESP	2	1 and 2	2-4	22.3	9	5	2	2	0	0-18
B	Saturator	A/B	2	1	2	6.7	0	0	0	0	0	0
				2	2	6.7	0	0	0	0	0	0
C	Saturator	HVAF	1	1	2	12.0	33	4	0	0	0	0-5
D	Saturator	HVAF	1	1	2	13.1	100	100	100	0	0	10-15
E	Still	A/B	1	1	2	29.0	0	0	0	0	0	0
F	Asphalt storage tanks	Mist elim.	1	1	2	24.0	0	0	0	0	0	0-0.4

[a]Includes saturator, hot looper, striking-in section, and coater.
[b]Detailed plots of opacity versus time are included in Appendix A.

the roofing line is shut off to repair a felt break. It should be noted that there were several line stoppages during the tests cited above.

2. The operating temperature of the control device at Plant C was about 55.5°C (132°F) compared with an operating temperature of about 71.7°C (161°F) for Plant D. This could bias the measured particulate removal efficiency of the HVAF at Plant D towards the low side because some of the hydrocarbons which are particulates at 55.5°C (132°F), and are measured as a particulate by the EPA method, would be gases at 71.7°C (161°F) and would thus pass through the HVAF. The greater visible emissions from Plant D, as compared with Plant C, also support the argument that more gaseous emissions were present in the exhaust stream of Plant D. Gaseous emissions that pass through a HVAF could condense to form a visible plume upon coming in contact with the cooler ambient air. In these tests, the test samples were cooled to 38°C (100°F) before the particulate mass fraction was collected. Therefore, part of the gaseous hydrocarbon will be condensed, and the measured mass of particulate will be higher. The effect of this is that the data indicate the efficiency of removing hydrocarbons that are condensible at 38°C (100°F) and not just the efficiency of removing the particulate matter.

Table 4-6 shows only 0.04 kg/h (0.088 lb/h) of POM emissions and 2.42 kg/h (5.34 lb/h) of gaseous HC emissions from the wet looper, saturator, and storage tank compared to 29.9 kg/h (66 lb/h) of total particulate emissions. The HVAF achieves a 91.9 percent reduction of POM emissions and no reduction of gaseous hydrocarbons.

4.4.3 Performance of Afterburners

Thermal afterburners are used in this industry primarily for the control of pollutants from asphalt blowing stills, although in a few cases they have been used to control the pollutants from saturators and other roofing line processes. When properly designed, constructed, and operated, thermal afterburners give good performance in the control of organic particulates, gaseous hydrocarbons, and POM's from sources within the asphalt roofing industry.

4.4.3.1 Afterburners Applied to the Saturator, Wet Looper, Coater, and Storage Tanks. Emission measurement tests were performed on one asphalt plant where two identical afterburners were operated in parallel

to control the emissions from the saturator, wet looper, coater, and storage tanks. The emissions data for these parallel afterburners were combined to reflect total process emissions. These data, Plant B in Figure 4-12, reflect an average controlled particulate emission level of 0.0465 kg/Mg (0.093 lb/ton) of product. Visible emissions from the afterburners were less than one percent opacity as shown in Table 4-9. The individual afterburners operated at particulate removal efficiencies of 77.7 percent and 95.2 percent. This difference is attributed to the fact that the afterburner with the lower efficiency was operated at a temperature of 538°C (1000°F), compared with an operating temperature of 649°C (1200°F) for the other. As discussed in Section 4.3.2.3 and shown in Figures 4-8 and 4-9, a temperature difference as small as 56°C (101°F) easily accounts for a variation in efficiencies as large as that observed.

If one assumes that both afterburners are operated at 649°C (1200°F) and therefore achieve control efficiencies of 95.2 percent, the average emission level of 0.046 kg/Mg (0.1 lb/ton) (total from both afterburners) shown in Figure 4-12 would be reduced to 0.021 kg/Mg (0.042 lb/ton) of product. Furthermore, if one combines the known data for operation of these specific afterburners at temperatures of 538°C and 649°C (1000°F and 1200°F) with the information (see Section 4.3.2.3) that almost 100 percent of organic particulate and gaseous hydrocarbon can be destroyed at temperatures of 704°C to 816°C (1300°F to 1500°F), then an efficiency versus temperature curve can be constructed as shown in Figure 4-13. Based on this curve, if Plant B were operated at 704°C (1300°F), the removal efficiency would be 98 percent, and controlled emissions from Plant B would be 0.0086 kg/Mg (0.017 lb/ton) of product. The data in Table 4-5 show that the concentration of HC and POM in the fume from the saturator is small when compared to the concentration of particulate. The uncontrolled emissions from the saturator and storage tanks contain 0.012 kg/h (0.027 lb/h) of POM compared to 0.62 kg/h (1.36 lb/h) of gaseous hydrocarbon and 5.49 kg/h (12.9 lb/h) of particulate.

4.4.3.2 Afterburners Applied to Blowing Stills. Emission measurements were performed on an afterburner used to control emissions from a blowing still with the afterburner operating at about 816°C (1500°F).

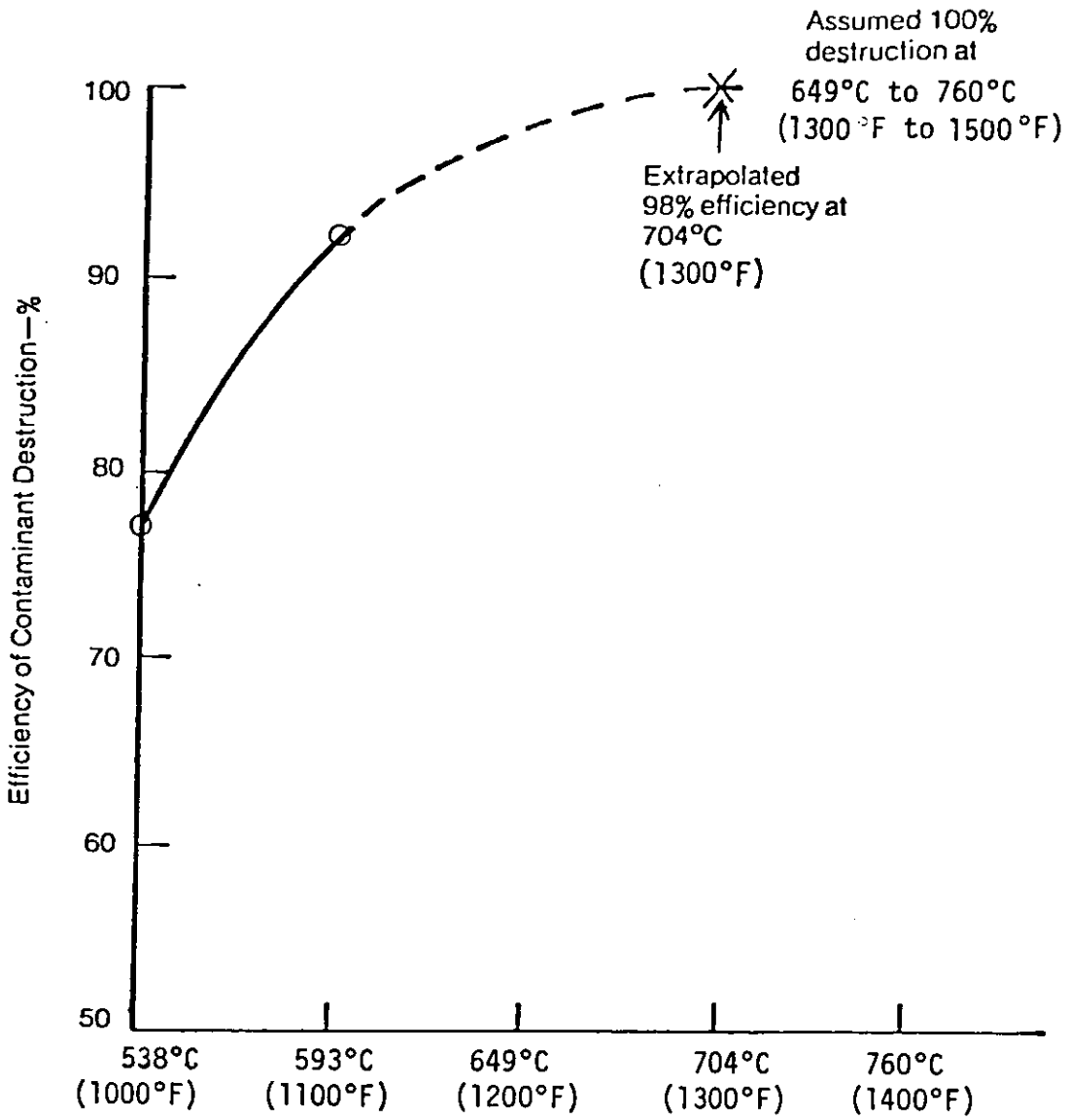

Figure 4-13. Extrapolation of efficiency versus temperature curve for the afterburners at Plant B.

Measured efficiencies of the afterburner were 95 percent and 96.7 percent for the saturant and coating blows, respectively. The fume from the coating blows had a higher concentration of particulate and HC than the fume from the saturant blows. The efficiency of HC destruction is directly related to concentration, all other factors being equivalent.[15] Outlet particulate emissions were 0.243 kg/m^3 (2.02 lb/1,000 gal) of saturant asphalt charged to the still and 0.405 kg/m^3 (3.38 lb/1,000 gal) of coating asphalt. These emission data are summarized in Table 4-7 and Figure 4-14. No visible emissions were observed from the afterburner (Table 4-9) for either the saturant or the coating blowing cycles.

This afterburner demonstrated a 98.2 and 95.0 percent reduction of the gaseous hydrocarbon emissions for the saturant and coating blows, respectively, and a 99.7 percent reduction of POM's for the coating blows. The incomplete destruction of particulate and gaseous hydrocarbons at the afterburner temperature of 816°C (1500°F) was probably due to inadequate mixing of fume and combustion products or to bypassing some fume around the hot reaction zone, as discussed in Section 4.3.2.3. The residence time at combustion temperature may also have been inadequate for complete combustion both of the gaseous hydrocarbons and the large droplets usually formed during the rapid cooling of the gases by dilution air.

4.4.4 Performance of Electrostatic Precipitators

Two modular ESP's at one asphalt roofing plant were tested. The two ESP's were installed in parallel to control the combined emissions from the saturator, coater, and wet looper. The ESP's operated at inlet temperatures of 51.1°C (124°F), 57.2°C (135°F), and 48.3°C (119°F) and achieved particulate removal efficiencies of 96.6 percent, 93.6 percent, and 96.8 percent, respectively. The controlled particulate emissions from both ESP's, when combined, averaged 0.016 kg/Mg (0.032 lb/ton) of product as shown for Plant A in Figure 4-12. Visible emissions from the ESP's were generally less than 10 percent opacity as shown in Table 4-9. As stated in Section 4.3.2.4, this efficiency could be further increased by the use of additional series modules. The potential efficiency of these units could have been increased by cooling the inlet fume below 50°C (122°F) so additional hydrocarbons would have been in particulate

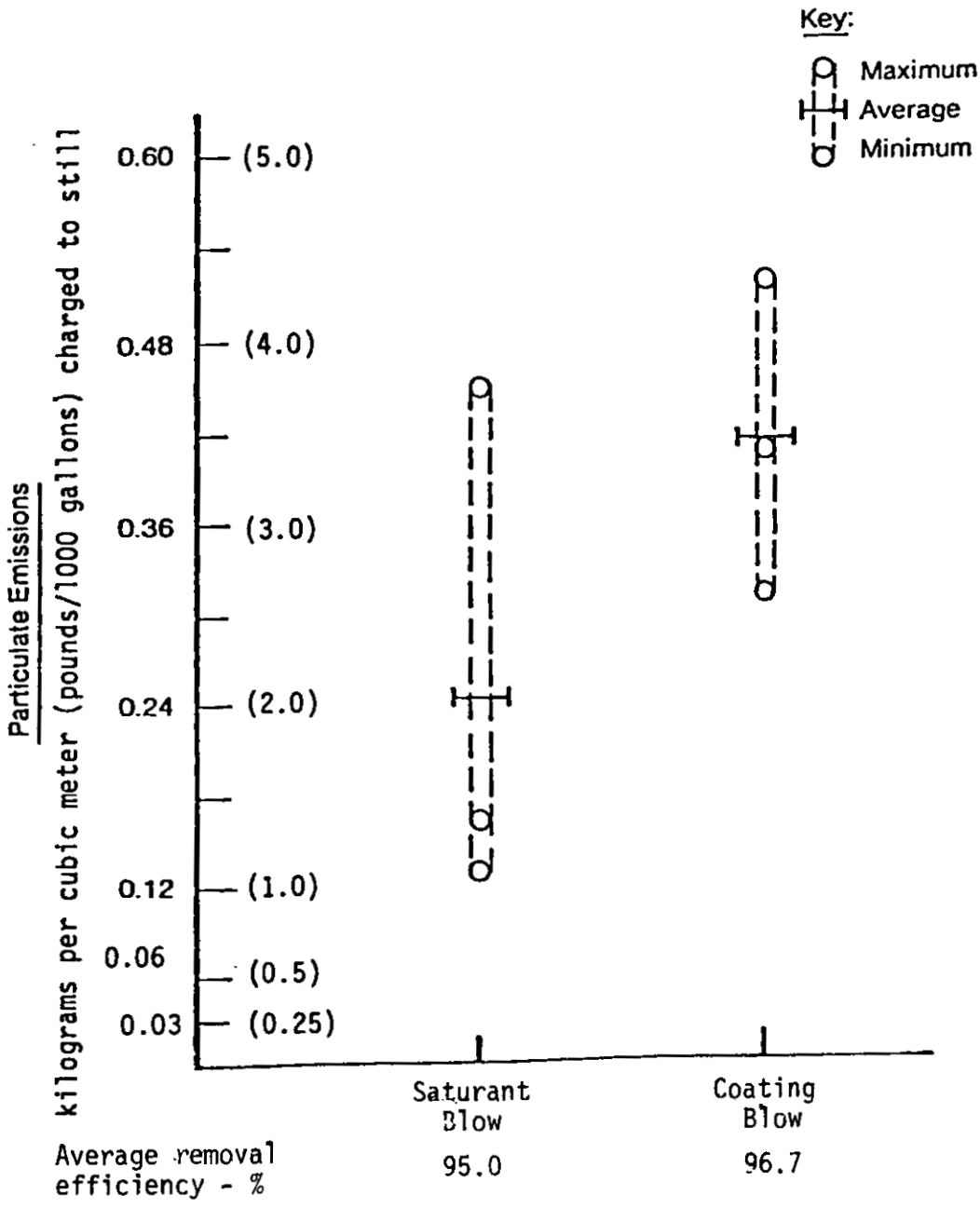

Figure 4-14. Particulate emissions from an afterburner controlling an asphalt blowing still.

form, removable by the ESP. As with the high velocity air filter systems discussed earlier, precooling of the inlet air stream to 30°C to 49°C (90°F to 120°F) via air dilution or water sprays is necessary to condense a substantial portion of the gaseous hydrocarbons to particulates which can be removed by the ESP.

4.4.5 Performance of Fabric Filters

Fabric filters used to control emissions from talc and limestone handling and storage equipment at asphalt roofing plants were not tested. As discussed in Section 4.3.2.5, these devices are used to control clay (C) and limestone (L) emissions in the crushed stone industry as summarized in Figure 4-15. In the applications in the crushed stone industry, collection efficiencies exceed 99 percent, and outlet loadings are consistently less than 2.3×10^{-5} kg/m^3 (0.01 gr/DSCF). As shown in Table 4-10, visible emissions are consistently zero. The material being controlled, the processes, conveying, and storage are the same for both industries; thus, similar emission levels can be attained for the applications in the asphalt roofing industry.

4.4.6 Performance of Mist Eliminators on Storage Tanks

Mist eliminators were discussed in Section 4.3.2.2. Visible emissions from a mist eliminator used to control emissions from storage tanks were zero percent opacity as shown in Table 4-9. Particulate mass loadings from mist eliminators were not measured.

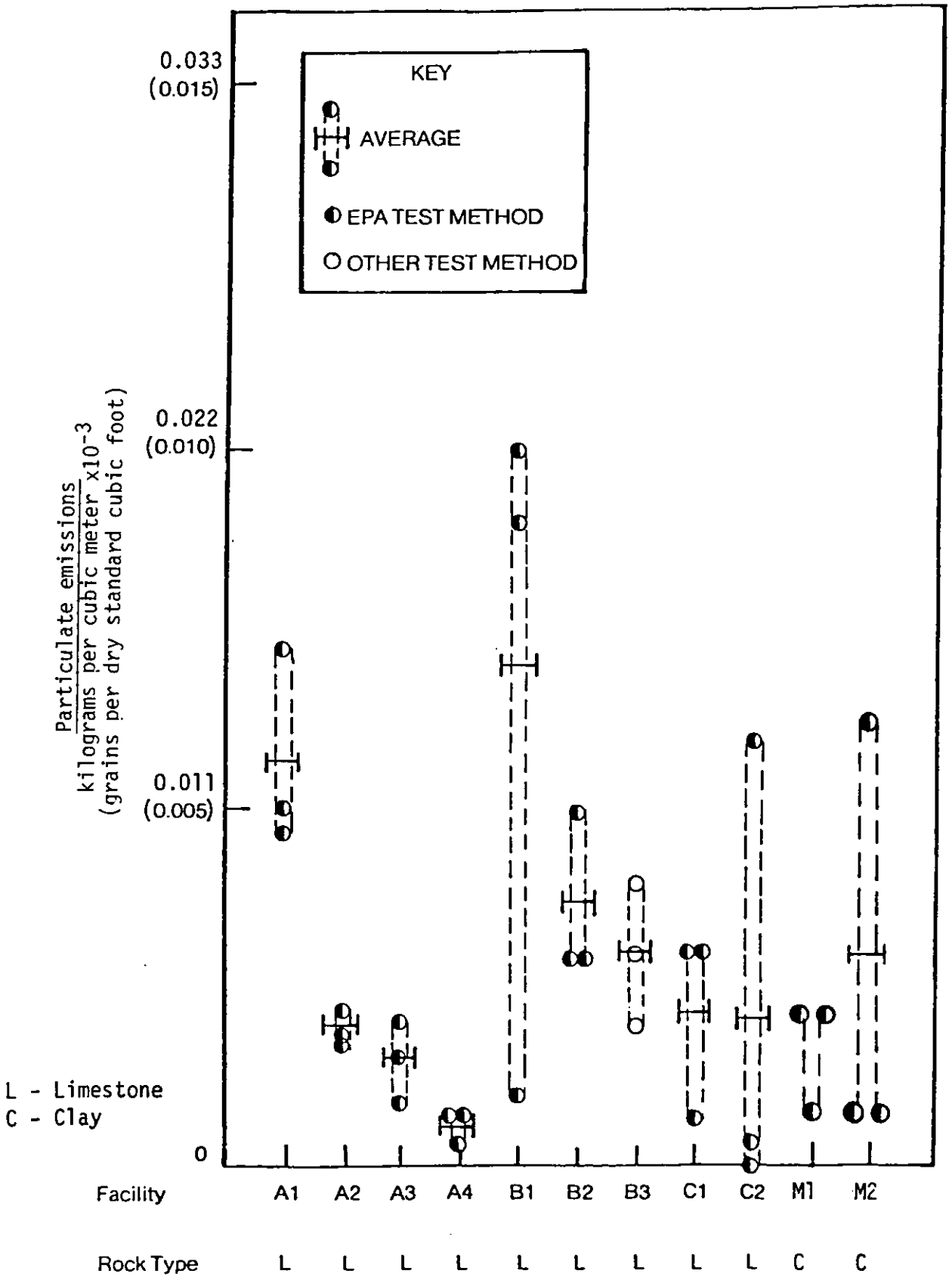

Figure 4-15. Particulate emissions from crushed stone facilities.[28]

TABLE 4-10. VISIBLE EMISSIONS FROM MINERALS HANDLING AND STORAGE FACILITIES

Plant	Facility	Control device	No. of observations	Opacity %
G	Conveyor transfer point	Baghouse	40	0
H	Finishing screens	Baghouse	40	0
J	Finishing screens	Baghouse	40	0
K	Finishing screens and bins	Baghouse	30	0
L	Bagging operation	Fugitive	1 h	0

4.5 REFERENCES FOR CHAPTER 4

1. United Air Specialists, Inc. The Control of Asphalt and Coal Tar Fumes. Form 9-374. Cincinnati, Ohio. 1974. p. 2.

2. Corbett, L. W. Reaction Variables in the Air-Blowing of Asphalt. Industrial Engineering Chemistry Process Design and Development. 14(2):181-187. April 1975.

3. Air Pollution Engineering Manual (Second Edition). U.S. Environmental Protection Agency. Research Triangle Park, N.C. AP-40. May 1973. p. 687.

4. Barth, E. J. Asphalt-Science and Technology. New York, Gordon and Breach, 1962. p. 331-428.

5. Andersen 2000, Inc. HEAF Air Pollution Control Equipment Engineering Manual with Operating and Maintenance Instructions. TR No. 75-900011. Atlanta, Ga. April 1976. p. 14.

6. Reference 5, Figure 7.

7. Reference 5, p. 21.

8. Reference 5, p. 10, 11.

9. Reference 5, Table IV.

10. High-Energy Air Filter for Reducing Industrial Effluents. Filtration Engineering. May 1970.

11. Reference 5, p. 53.

12. Letter from Brady, J. D., Andersen 2000, Inc., to Noble, E. A., EPA/ISB. January 21, 1976. Cleaning procedures for HEAF units.

13. Reference 5, Figure 1.

14. Monsanto Enviro-Chem Systems, Inc. Brink Fact Guide for the Elimination of Mists and Soluble Solids. Undated.

15. Afterburner Systems Study. U.S. Environmental Protection Agency. Research Triangle Park, N.C. EPA-R2-72-062. August 1972. p. 6, 7, 16a-23, 69-72.

16. EPA Air Pollution Emission Test. Final Report for Plant B. p. 19.

17. United Air Specialists, Inc. Smog-Hog is a Glutton for Dirty Air! Cincinnati, Ohio. 1 p.

18. United Air Specialists. Smog-Hog: Beat the High Cost of Process Smoke Control! M-6A. Cincinnait, Ohio. 1972. 4 p.

19. United Air Specialists. Smog-Hog Air Pollution Control System. Figure 8-174. Cincinnati, Ohio. 1 p.

20. A Manual of Electrostatic Precipitator Technology. Parts I and II. National Air Pollution Control Administration. Cincinnati, Ohio. APTD-0610. August 1970.

21. Control Techniques for Particulate Air Pollutants. U.S. Department of Health, Education, and Welfare. Washington, D.C. AP-51. January 1969. 215 p.

22. Schmeider, G. G. et al. Selecting and Specifying Electrostatic Precipitators. Chemical Engineering. 82(11):94-108. May 26, 1975.

23. Particulate and Gaseous Emissions from the Asphalt Roofing Process Saturator at the Celotex Roofing Plant, Fairfield, Alabama. U.S. Environmental Protection Agency. Research Triangle Park, N.C. 76 ARM 13. p. 44.

24. Memo from Shea, E. P., MRI/NC, to Noble, E. A., EPA/ISB. April 23, 1979. Minutes of April 4, 1979 meeting with representatives of Owens-Corning Fiberglas.

25. Non-Metallic Mineral Processing Plants - Background Information for Proposed Emission Standards. Draft EIS. U.S. Environmental Protection Agency. Research Triangle Park, N.C. March 1979. p. 4-21.

26. Reference 25, p. 4-40.

27. EPA Visible Emission Tests. Final Reports for Plants A, B, C, D, E, and F.

28. Reference 25, p. 4-35.

5. MODIFICATION AND RECONSTRUCTION

In accordance with Section 111 of the Clean Air Act, as amended, standards of performance shall be established for new sources within a stationary source category which ". . . may contribute significantly to air pollution . . . ." Standards of performance apply to "affected facilities," the construction or modification of which started after the proposal of said standards.

On December 16, 1975, the Agency promulgated amendments to the general provisions of 40 CFR Part 60, including additions and revisions to clarify modification and the addition of a reconstruction provision. Under the provisions of 40 CFR 60.14 and 60.15, an "existing facility" may become subject to standards of performance if deemed modified or reconstructed. An "existing facility" defined in 40 CFR 60.2(aa) is an apparatus of the type for which a standard of performance is promulgated and the construction or modification of which was commenced before the date of proposal of that standard. The following discussion examines the applicability of these provisions to asphalt roofing manufacturing facilities (saturators, asphalt storage tanks, blowing stills, and mineral handling and storage) and details conditions under which these existing facilities could become subject to standards of performance. It is important to stress that standards of performance apply to affected facilities, which, combined with existing and other facilities, comprise a stationary source. The addition of an affected facility to a stationary source through any mechanism, new construction, modification, or reconstruction, does not make the entire stationary source subject to standards of performance, only the added affected facility.

5.1 40 CFR PART 60 PROVISIONS FOR MODIFICATION AND RECONSTRUCTION

5.1.1 Modification

It is important that these provisions be fully understood prior to investigating their applicability.

Section 60.14 defines modification as follows:

> Except as provided under paragraphs (e) and (f) of this section, any physical or operational change to an existing facility which results in an increase in the emission rate to the atmosphere of any pollutant to which a standard applies shall be considered a modification within the meaning of Section 111 of the Act. Upon modification, an existing facility shall become an affected facility for each pollutant to which a standard applies and for which there is an increase in the emission rate to the atmosphere.

Paragraph (e) lists certain physical or operational changes which will not be considered as modifications, irrespective of any change in the emission rate. These changes include:

1. the maintenance, repair, and replacement determined to be routine;
2. an increase in production rate accomplished without a capital expenditure;
3. an increase in the hours of operation;
4. the use of an alternative fuel or raw material if, prior to the standard, the existing facility was designed to accommodate that alternative fuel or raw material;
5. the addition or use of an air pollution control device that is environmentally beneficial.

Paragraph (b) clarifies what constitutes an increase in emissions in kilograms per hour and the methods for determining the increase, including the use of emission factors, material balances, continuous monitoring systems, and manual emission tests. Paragraph (c) affirms that the addition of an affected facility to a stationary source does not make any other facility within that source subject to standards of performance. Paragraph (f) simply provides for superseding any conflicting provisions.

5.1.2 Reconstruction

"Reconstruction" means the replacement of components of an existing facility to such an extent that:

1. the fixed capital cost of the new components exceeds 50 percent of the fixed capital cost that would be required to construct a comparable entirely new facility; and

2. it is technologically and economically feasible to meet the applicable performance standard.

The purpose of these provisions is to ensure that an owner or operator does not perpetuate an existing facility by replacing all but vestigial components, such as support structures, frames, and housing, rather than totally replacing it in order to avoid subjugation to applicable standards of performance.

The enforcement division of the appropriate EPA regional office should be contacted whenever a source has questions regarding modifications and reconstruction. Their judgment will supersede any general examples that are given in this document.

5.2 APPLICABILITY TO ASPHALT ROOFING PLANTS

5.2.1 Modification

Physical and operational changes to an asphalt roofing plant which might be considered modifications are:

1. extension of the saturator capacity through the use of additional sprays or dips; and

2. replacement of a component with one of a different design or capacity to increase the line speed of the plant.

5.2.2 Reconstruction

There are few possible changes that are likely to be made to an asphalt roofing plant which would be defined as reconstruction. Generally, asphalt roofing plants have a long lifetime. Many existing plants have been operating for over 50 years. Due to the flammability and high operating temperatures of the asphalt, the potential for fire is significant. It is possible that a fire could damage an asphalt roofing plant to such an extent that the provisions for reconstruction would apply to the repairs necessary to resume production.

5.3 SUMMARY

According to 40 CFR Part 60 provisions for modifications and reconstructions, as applied to asphalt roofing plants, few, if any, facilities are expected to become affected facilities by virtue of modification or reconstruction after proposal of new standards. Relatively unchanging technologies for production and the extended lifetime of asphalt roofing plants substantiate this position.

6. MODEL PLANTS AND REGULATORY ALTERNATIVES

6.1 PURPOSE

The purpose of Chapter 6 is to define model plants and the regulatory alternatives for the Asphalt Roofing and Siding Manufacturing Industry. The environmental, economic, and energy impacts associated with the model plants and the regulatory alternatives are presented in Chapters 7 and 8.

6.2 MODEL PLANTS

The production of asphalt roofing and siding varies widely from plant to plant. Plant production is determined by plant capacity and by operating time. Plant capacity, in turn, depends on the number of lines in a plant, the felt width, and the line speed. In this report, as shown in Table 6-1, the parameters of operating time, felt width, and line speed are considered to be fixed with the number of lines in a plant as the only production variable. The data for plants with stills are presented in Table 6-2.

Several model plant configurations were developed. Three plant sizes (small, medium, and large) were chosen as representative of probable future plants based on review of current installations and the mix of products manufactured. The small plant has one roofing line, the medium sized plant has two roofing lines, and the large plant has two roofing lines plus one saturated felt line. For each size of plant, small, medium and large, one configuration includes an asphalt blowing still while the second configuration does not, resulting in a total of six model plants.

Figures 6-1 through 6-6 illustrate the model plant configurations, one for each of the six model plants. Figures 6-1 and 6-2 are for small plants, 6-3 and 6-4 for medium plants, and 6-5 and 6-6 for large plants. Development of model plant configurations utilized data from source

TABLE 6-1. MODEL PLANT PRODUCTION RATES AND OPERATING PARAMETERS[1]

Production		No. of production lines	Operating time	Felt width		Line speed		Product	Land area		Size designation
Mg/yr	(tons/yr)		h/yr	m	(in.)	(m/s)	(ft/min)		m	(acres)	
109,759	(121,000)	1	4,000	1.22	(48)	2.03	(400)	106.5-kg[b] (235-lb) shingle	60,703	(15)	Small
219,518	(242,000)	2	4,000	1.22	(48)	2.03	(400)	106.5-kg[b] (235-lb) shingle	80,937	(20)	Medium
281,201	(310,000)	2	4,000	1.22	(48)	2.03	(400)	106.5-kg (235-lb) shingle	89,031	(22)	Large
		1	2,000	0.864	(36)	2.03	(400)	c			

[a]The operating time is based on two-shift operation: 16 h/d, 5 d/wk, 50 wk/yr.
[b]Saturated felt produced on single line 20 percent of time: 50:50 mix of 6.8-kg (15-lb) and 13.6-kg (30-lb) saturated felt.
[c]Saturated felt only produced on this line: 50:50 mix of 6.8-kg (15-lb) and 13.6-kg (30-lb) saturated felt, one-shift operation. Production rates would be somewhat lower if a mix of shingle and saturated felt were manufactured on lines 1 and 2.

TABLE 6-2. BLOWING STILL PARAMETERS FOR MODEL PLANTS[2]

(METRIC)

Plant production Mg/yr	Asphalt production[a] Mg/yr	Still capacity m	Blowing time hours		No. of blows/yr		Total blowing time h/yr	Operating temperature °C	Air flow[b] Nm^3/s	Softening point °C	
			Saturant	Coating	Saturant	Coating				Saturant	Coating
109,759	46,200	75.7	1.5	4.5	382	306	2000	246-271	.75	40-74	99-110
219,518	93,128	75.7	1.5	4.5	754	604	3850[c]	246-271	.75	40-74	99-110
281,201	116,219	94.6	1.5	4.5	782	607	3906[c]	246-271	.94	40-74	99-110

(ENGLISH)

Plant production tons/yr	Asphalt production tons/yr	Still capacity gal	Blowing time hours		No. of blows/yr		Total blowing time h/yr	Operating temperature °F	Air flow SCFM	Softening point °F	
			Saturant	Coating	Saturant	Coating				Saturant	Coating
121,000	50,931	20,000	1.5	4.5	382	306	2000	475-520	1600	104-165	210-230
242,000	102,666	20,000	1.5	4.5	754	604	3850[c]	475-520	1600	104-165	210-230
310,000	128,122	25,000	1.5	4.5	782	607	3906[c]	475-520	2000	104-165	210-230

[a] Asphalt production rate from Table 6-3.
[b] Inlet air to still is compressed at 3.4×10^5 Pa (50 psi).
[c] Still operating time shown is for one blowing still in operation at a time. Medium and large plants will operate more than one still at a time.

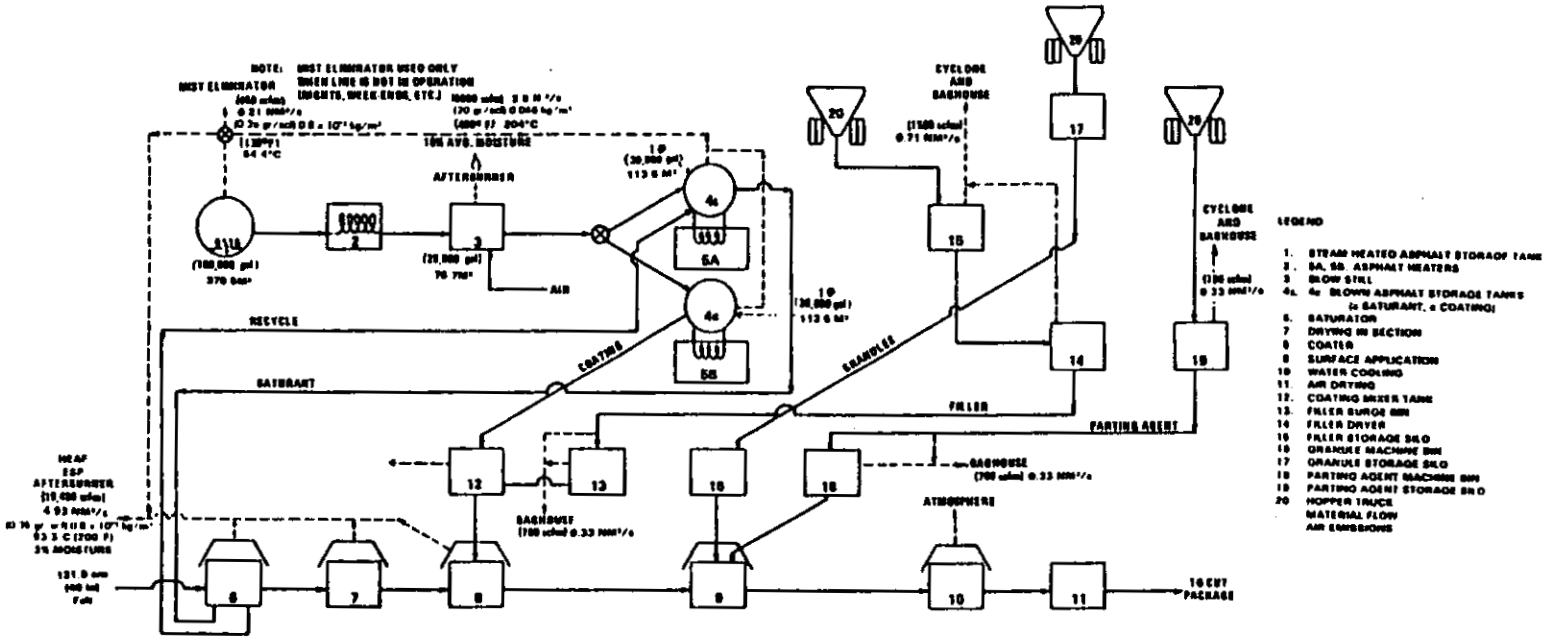

Figure 6-1. Configuration 1 for small plant.

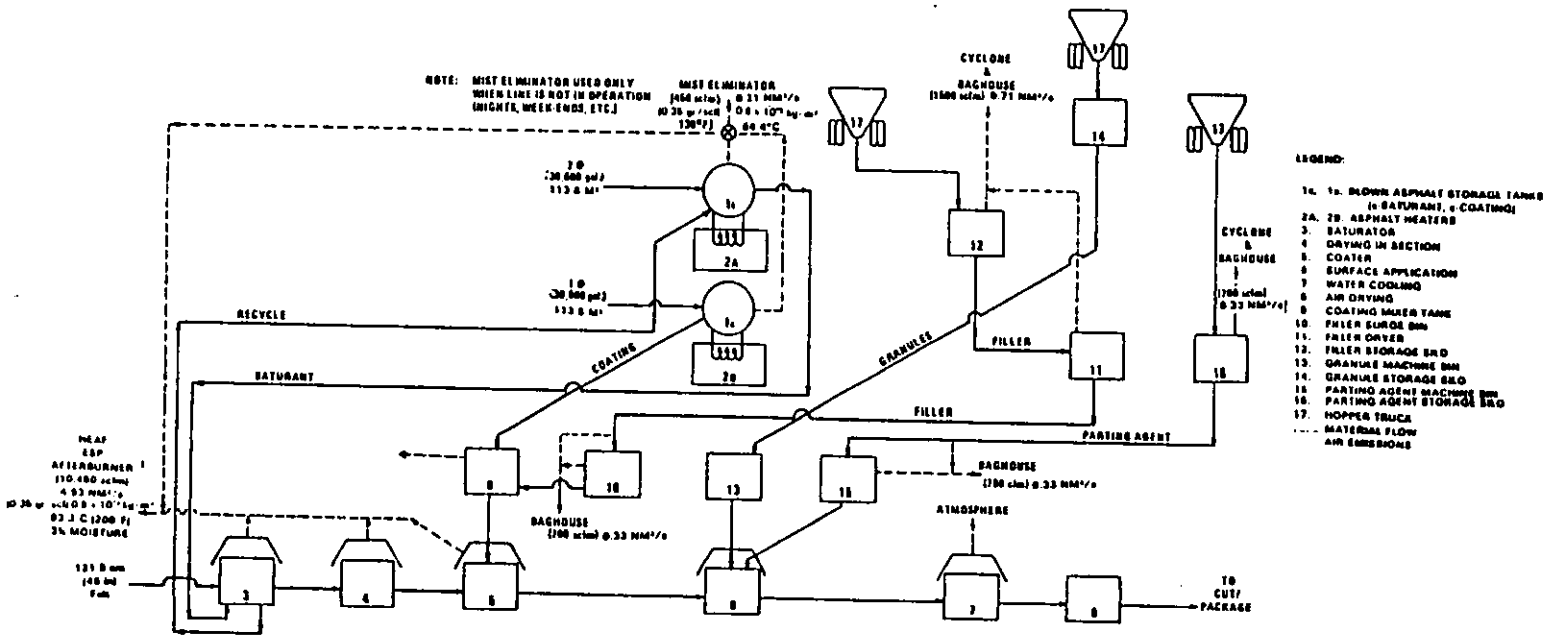

Figure 6-2. Configuration 2 for small plant.

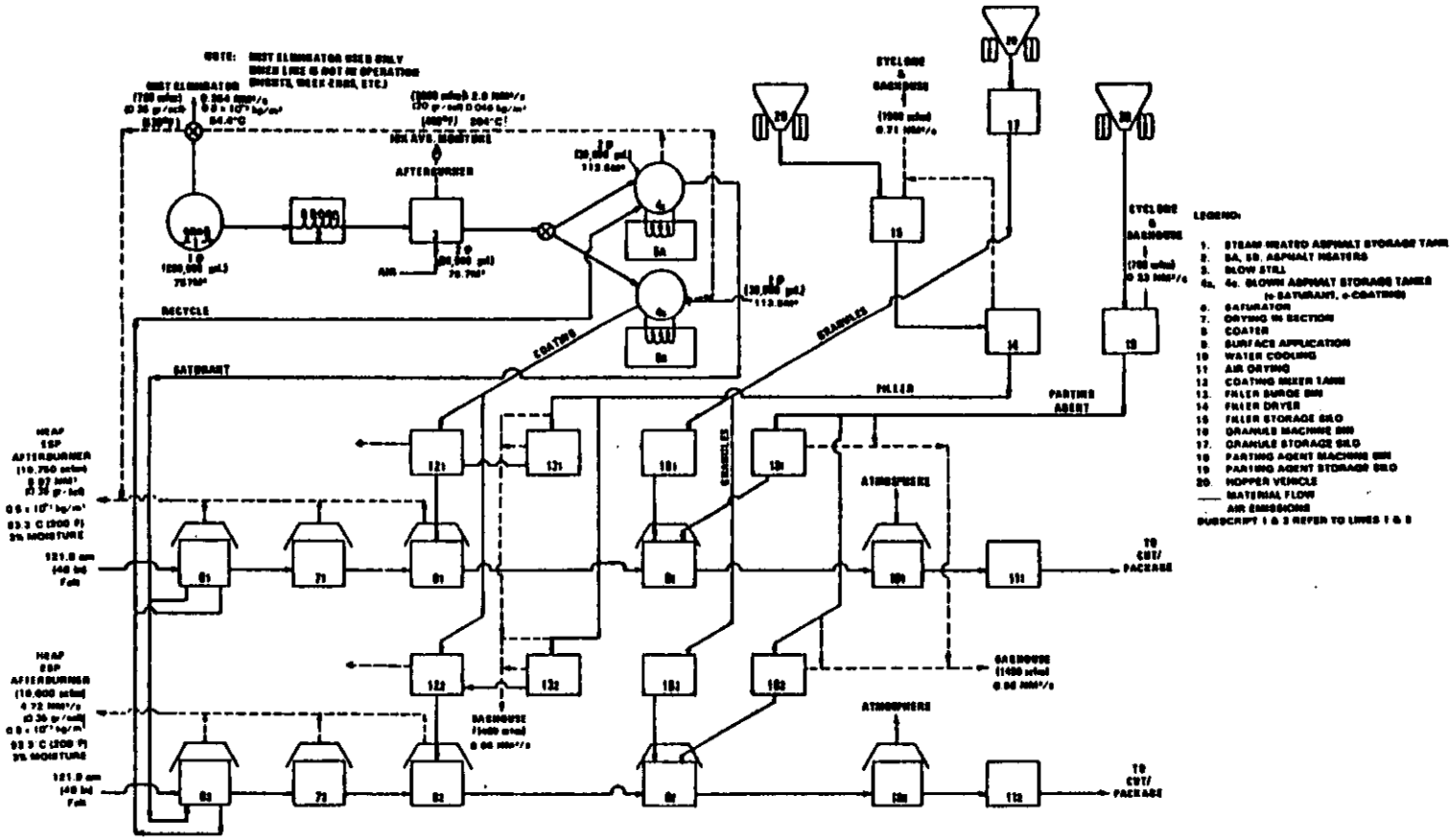

Figure 6-3. Configuration 1 for medium plant.

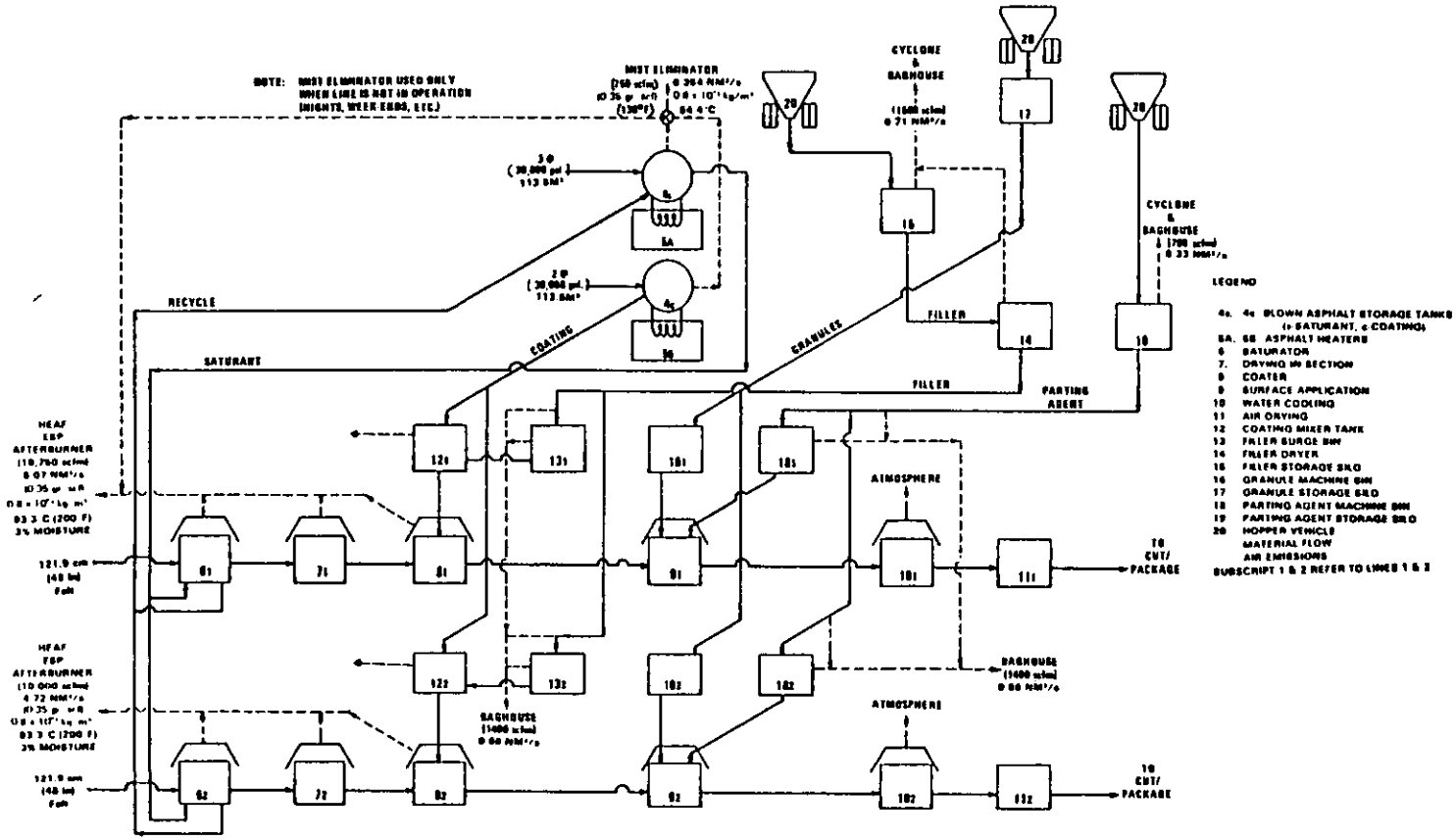

Figure 6-4. Configuration 2 for medium plant.

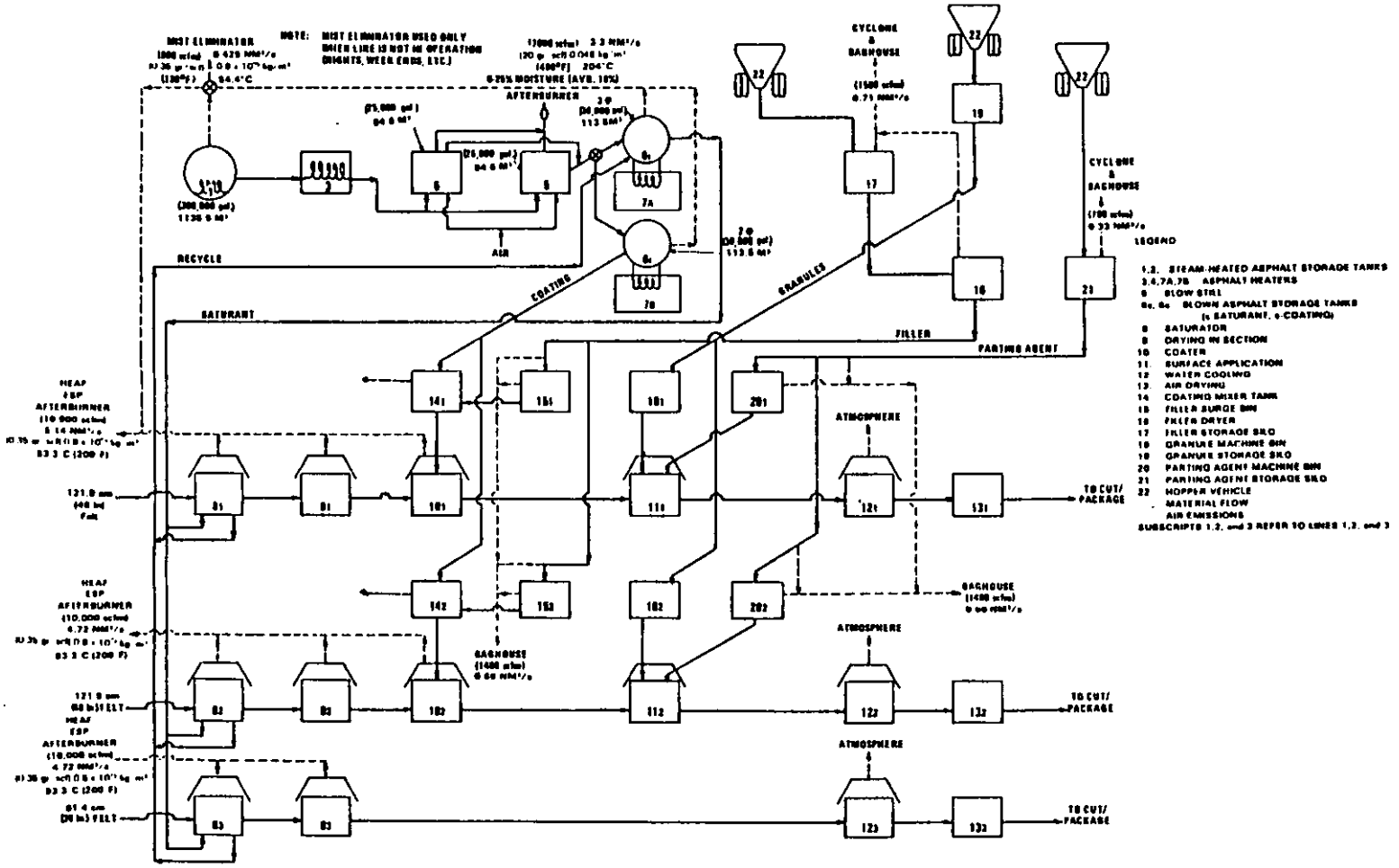

Figure 6-5. Configuration 1 for large plant.

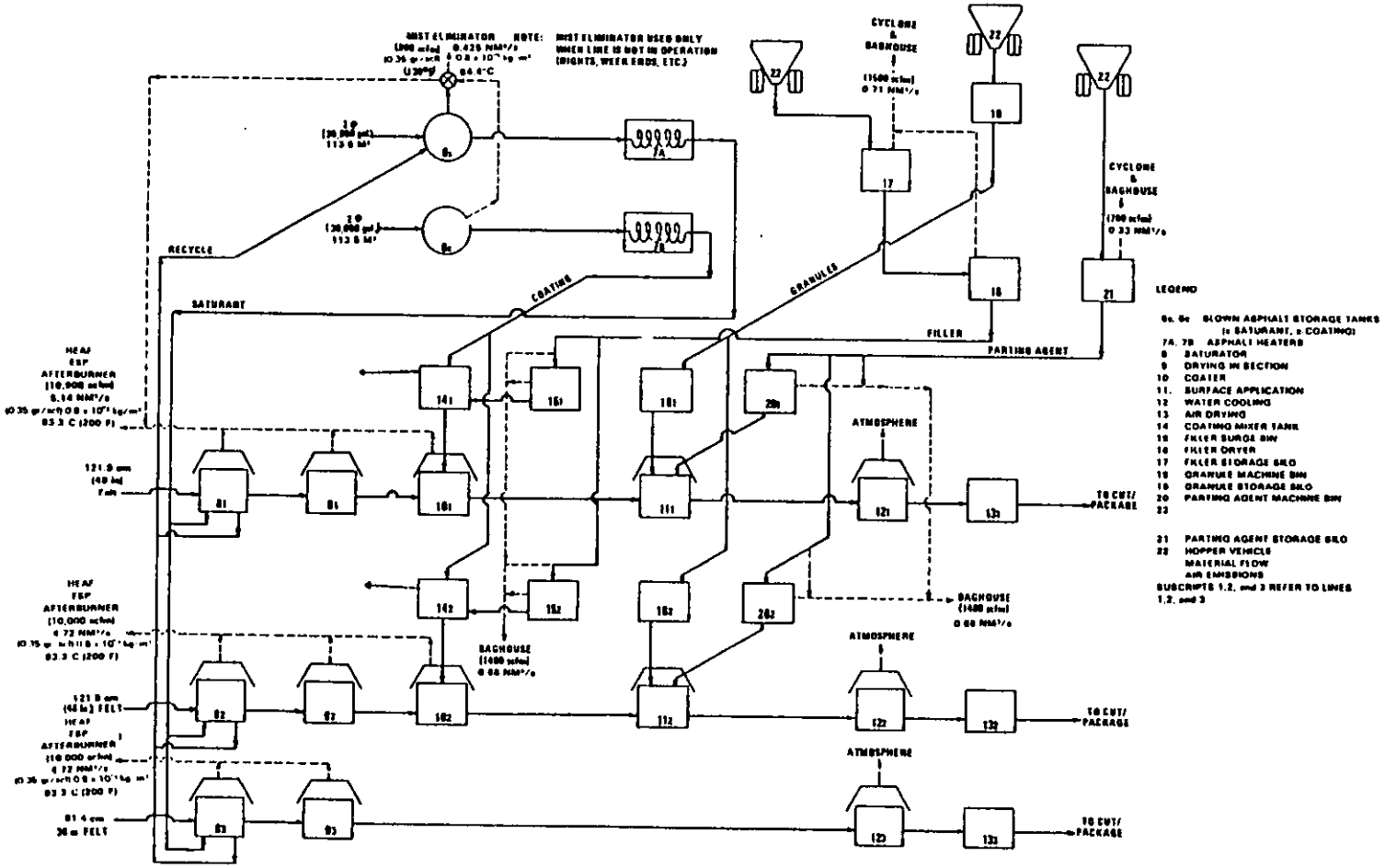

Figure 6-6. Configuration 2 for large plant.

tests, from industry responses to EPA requests for information, from plant visits, and from an in-depth study of process control options.

The emissions from the saturator, wet looper, and coater are controlled by any one of three control devices. The control devices used are: (1) high velocity air filters (HVAF); (2) electrostatic precipitators (ESP); and (3) afterburners (A/B). The term "afterburners" includes thermal oxidizers, waste heat boilers, incinerators, and afterburners with waste heat recovery. Emissions from asphalt storage tanks can be controlled by a mist eliminator or routed through one of the saturator and coater control devices. It was assumed that it will be cheaper to use a mist eliminator to control storage tank emissions when the roofing line is not operating than to operate the saturator and coater control device full time. The only device utilized for controlling the emissions from blowing stills is the afterburner.

It was assumed for model plant configuration development that emissions controlled by HVAF's and ESP's will be cooled to 40°C (104°F) prior to control.

The model plant layouts utilize individual baghouses for each talc and mineral stabilizer emission source. This represents a "worst-case" cost impact. It may be more cost effective, however, to combine these as follows:

Small plants:

1. combine mineral stabilizer surge bin (13),* mineral stabilizer dryer (14), and mineral stabilizer silo (15); and
2. combine parting agent machine bin (18) and parting agent silo (19).

Medium and large plants:

1. combine mineral stabilizer surge bins (13_1 and 13_2), mineral stabilizer dryer (14) and mineral stabilizer silo (15); and
2. combine parting agent machine bins (18_1 and 18_2) and parting agent silo (19).

---

*Numbers in parentheses refer to the codes used in the legends for Figures 6-1 through 6-6.

Control of emissions from the mineral surfacing application area is not considered in the model plants for two reasons: (1) the emissions appeared to be contained within the plant building; and (2) there was no system observed that captured the emissions from this area in a satisfactory manner.

The raw material requirements and the utilities usage for each of the model plant sizes (small, medium, and large) are shown in Table 6-3. The data in the table were obtained by compiling information supplied by asphalt roofing companies in response to EPA requests for information and then converting the data to fit the model plants. Utility requirements (water, gas, oil, electricity) for operation of the emission control systems are also included in Table 6-3.

6.1.1 Baseline Model Plant Control Systems

The baseline model plant control systems are shown in Table 6-4 for small plants; in Table 6-5 for medium plants; and in Table 6-6 for large plants. The facilities being controlled are the saturator and coater, blowing still, and mineral handling and storage. The control devices include a high velocity air filter, an electrostatic precipitator, and an afterburner for the saturator and coater; an afterburner* for the blowing still; and a cyclone for the mineral handling and storage. Since the typical asphalt roofing plant does not have a control device on the asphalt storage tanks, the asphalt storage tanks are shown with no control device in Tables 6-4, 6-5, and 6-6.

Asphalt roofing plants presently meet typical state standards of 20 percent opacity, but it is not known if the plants meet typical state mass emissions requirements. The baseline model plant was developed using data from plant emission tests, from industry-supplied data, from plant site visits, and from the State Implementation Plans (SIP's). The emission data in Tables 6-4, 6-5, and 6-6 for the saturator and coater, asphalt storage tanks, and blowing stills were based on SIP's and calculated for the model plant size.

---

*The afterburner is preceded by a cyclone that is considered to be a piece of process control equipment.

TABLE 6-3. RAW MATERIALS AND UTILITY REQUIREMENTS FOR MODEL PLANTS[4]

(METRIC)

Production Mg/yr	Asphalt Mg/yr	Felt Mg/yr	Filler Mg/yr	Granules Mg/yr	Talc Mg/yr	Water m^3/yr	Natural gas 10^{13}J/yr	Oil m^3/yr	Electricity 10^{13}J/yr
109,759	46,200	15,175	20,462	40,685	1,089	271,842	7.8	810	1.09
215,518	93,128	30,811	40,924	81,372	2,177	540,852	15.7	1,620	2.18
281,201	116,219	39,088	51,155	101,716	2,812	693,763	20.1	2,074	2.79

(ENGLISH)

Production tons /yr	Asphalt tons/yr	Felt tons/yr	Filler tons/yr	Granules tons/yr	Talc tons/yr	Water ft^3/yr x 10^6	Natural gas 10^6Therms/yr	Oil gal/yr	kWh/yr 10^6kWh/yr
121,000	50,931	16,730	22,558	44,852	1,200	9.6	0.743	214,000	3.03
242,000	102,666	33,967	45,115	89,706	2,400	19.1	1.486	428,000	6.05
310,000	128,122	43,091	56,394	112,133	3,100	24.5	1.903	548,000	7.75

[a]Information was taken from industry-furnished data on product specifications and production rates. The loss rate for all materials was assumed to be 9 percent.

TABLE 6-4. BASELINE MODEL PLANT CONTROL SYSTEM - ALTERNATIVE 1 (SMALL)

Emission source	SIP control parameter	Control system type	Control equipment operating temperature °C	(°F)	Exhaust gas characteristics: Air flow Nm³/s	(DSCFM)	Temperature °C	(°F)	Mass emissions kg/h	(lb/h)
Saturator, wet looper, and coater	20% opacity	Hood, fan, duct, and:								
		1. High velocity air filter	93	(200)	4.93	(10,450)	93	(200)	16.47	(36.75)
		2. ESP	93	(200)	4.93	(10,450)	93	(200)	16.47	(36.75)
		3. Afterburner	<538	(<1000)	4.93	(10,450)	349	(660)	16.47	(36.75)
Asphalt storage tanks	20% opacity	None	(None)	(None)	0.21	(450)	71	(160)	0.93	(2.05)
Blowing still	20% opacity	Afterburner,[b] asphalt heater, or waste heat boiler	(<538)	(<1000)	2.8	(6,000)	199	(390)	37.19 45.76	(82.0)[c] (100.8)[d]
Mineral loading and storage	20-40% opacity	Cyclone	Ambient		1.7	(3,600)	Ambient		0.54	(1.2)[e]

[a] Information is listed on a "per-line" basis from SIP.
[b] Afterburner efficiency 77.7 percent from test data for a unit operating at 538°C (1000°F).
[c] The blowing still tested had a capacity of 9,600 gallons. Data are from the saturant blow.
[d] Data are from the coating blow.
[e] Not tested during asphalt roofing study. Data were transferred from minerals industry.[4]

TABLE 6-5. BASELINE MODEL PLANT CONTROL SYSTEM - ALTERNATIVE 1 (MEDIUM)

Emission source	SIP control parameter	Control system type	Control equipment operating temperature		Exhaust gas characteristics					
					Air flow		Temperature		Mass emissions	
			°C	(°F)	Nm^3/s	(DSCFM)	°C	(°F)	kg/h	(lb/h)
Saturator, wet looper, and coater	20% opacity	Hood, fan, duct, and:								
		1. High velocity air filter	93	(200)	5.07	(10,750)	93	(200)	18.04	(39.80)
		2. ESP	93	(200)	5.07	(10,750)	93	(200)	18.04	(39.80)
		3. Afterburner	<538	(<1000)	5.07	(10,750)	349	(660)	18.04	(39.80)
Asphalt storage tanks	20% opacity	None	None	(None)	0.35	(750)	71	(160)	1.86	(4.10)
Blowing still	20% opacity	Afterburner,[b] asphalt heater, or waste heat boiler	<538	<1000	2.80	(6,000)	199	(390)	37.19 45.76	(82.0)[c] (100.8)[d]
Mineral loading and storage	20-40% opacity	Cyclone	Ambient		2.36	(5,000)	Ambient		1.08	(2.4)[e]

[a] Information is listed on a "per-line" basis from SIP.
[b] Afterburner efficiency 77.7 percent from test data for a unit operating at 538°C (1000°F).
[c] The blowing still tested had a capacity of 9,600 gallons. Data are from the saturant blow.
[d] Data are from the coating blow.
[e] Not tested during asphalt roofing study. Data were transferred from minerals industry.[4]

TABLE 6-6. BASELINE MODEL PLANT CONTROL SYSTEM - ALTERNATIVE 1 (LARGE)

Emission source	SIP control parameter	Control system type	Control equipment operating temperature		Exhaust gas characteristics					
					Air flow		Temperature		Mass emissions	
			°C	(°F)	Nm^3/s	(DSCFM)	°C	(°F)	kg/h	(lb/h)
Saturator, wet looper, and coater	20% opacity	Hood, fan, duct, and:								
		1. High velocity air filter	93	(200)	5.14	(10,900)	93	(200)	18.20	(40.12)
		2. ESP	93	(200)	5.14	(10,900)	93	(200)	18.20	(40.12)
		3. Afterburner	<538	(<1000)	5.14	(10,900)	349	(660)	18.20	(40.12)
Asphalt storage tanks	20% opacity	None	None	(None)	0.425	(900)	71	(160)	2.38	(5.25)
Blowing still	20% opacity	Afterburner,[b] asphalt heater, or waste heat boiler	<538	(<1000)	3.30	(7,000)	199	(390)	46.49 57.30	(102.5)[c] (126.0)[d]
Mineral loading and storage	20-40% opacity	Cyclone	Ambient		2.36	(5,000)	Ambient		1.39	(3.07)[e]

[a] Information is listed on a "per-line" basis from SIP.
[b] Afterburner efficiency 77.7 percent from test data for a unit operating at 538°C (1000°F).
[c] The blowing still tested had a capacity of 9,600 gallons. Data are from the saturant blow.
[d] Data are from the coating blow.
[e] Not tested during asphalt roofing study. Data were transferred from minerals industry.[4]

6.3 REGULATORY ALTERNATIVES

The purpose of this section is to list the regulatory alternatives or possible courses of action that EPA could take to control particulate emissions from asphalt roofing and siding manufacturing plants. Possible regulatory alternatives are as follows:

1. No new source performance standard (NSPS) for this industry.

2. New source performance standard to control the emissions from the saturator, wet looper, and coater and asphalt storage tanks.

3. New source performance standard to control the emissions from the saturator, wet looper, and coater, asphalt storage tanks, and the blowing still.

4. New source performance standard to control emissions from the saturator, wet looper, and coater, asphalt storage tanks, and materials handling.

5. New source performance standard to control emissions from the saturator, wet looper, and coater, asphalt storage tanks, blowing still, and materials handling.

Figure 6-7 is a matrix displaying the five regulatory alternatives with each facility to be controlled.

There is only one viable control technique for blowing stills. For the saturator and coater three types of control equipment are used, and, based on the data contained in Chapter 4 and Appendix C, all are judged to be similar in their control capability. For that reason, the regulatory alternatives presented in Figure 6-7 are different from most recommendations in that only one level of NSPS control is proposed for each emission source, other than baseline. All but one of the emission sources considered for control will, in the absence of an NSPS, be controlled by State and local agencies and essentially the same control devices will be used. The differences are:

1. The capture device for the saturator is a full enclosure rather than the hood typically used.

2. The efficiencies of the HVAF and ESP are increased by reducing the fume inlet temperature (the HVAF and ESP are particulate control devices and reducing the fume temperature converts more of the gaseous HC to a particulate).

Regulatory alternatives	Saturator	Asphalt storage	Blowing stills	Minerals handling and storage
1				
2	●	●		
3	●	●	●	
4	●	●		●
5	●	●	●	●

Figure 6-7. Regulatory alternatives and controlled facilities.

3. The efficiency of the afterburner is increased by increasing the combustion temperature and the residence time at temperature.

Total plant emissions will vary with each alternative because different quantities of particulate are emitted by the various emission sources.

6.3.1 Regulatory Alternative 1

This alternative assumes no NSPS would be set if emissions from asphalt roofing plants are determined to be insignificant now and are expected to remain so in the future, or if existing State standards are adequate and consistent. The asphalt roofing industry was ranked number 45 out of 59 source categories prioritized for NSPS development by EPA in 44 FR 163 on August 21, 1979.[5] In the absence of an NSPS, typical plants in the industry would utilize control systems as shown in Tables 6-4, 6-5, and 6-6. The States control emissions from asphalt roofing plants by monitoring opacity and odor complaints. The baseline plants would meet opacity requirements, but it is not known if the plants would meet the particulate standards. Tables 6-4, 6-5, and 6-6 list the emission sources, control systems, control parameters, operating temperatures, exhaust gas characteristics, and emissions for baseline asphalt roofing plants. The mass emissions listed in Tables 6-4, 6-5, and 6-6 were obtained from State Implementation Plans and were calculated to conform to model plant sizes. The energy and other utility requirements for operation of control equipment listed in Tables 6-4, 6-5, and 6-6 are included in Table 6-3.

6.3.2 Regulatory Alternative 2

This alternative assumes control of three emission sources: saturators, coaters, and asphalt storage tanks. Three types of control equipment (afterburner, ESP, and HVAF) have been demonstrated to be capable of achieving equivalent reduction in particulate emissions from saturators, coaters, and asphalt storage tanks. The baseline control system must be upgraded to meet the requirements of this regulatory alternative. The necessary changes are:

1. a better capture system;
2. precooling of the fume before the HVAF or the ESP; and
3. higher operating temperature and longer residence time in the afterburner.

The control systems containing these equipment types are described in Table 6-7 for small plants; in Table 6-8 for medium plants; and in Table 6-9 for large plants. Mist eliminators are shown for control of emissions from the asphalt storage tanks when the roofing line is not operating. The energy requirements and the costs of these control systems will vary.

6.3.3 Regulatory Alternative 3

The facilities to be controlled under this alternative are the same as for Alternative 2 except that blowing stills are included. The afterburner is the only device used to control particulate emissions from the blowing still. The control systems for the four facilities are shown in Tables 6-7, 6-8, and 6-9. The operating conditions for these control systems are also shown in the tables.

6.3.4 Regulatory Alternative 4

This regulatory alternative is the same as Alternative 2 except that control is recommended for materials handling. Tables 6-7, 6-8, and 6-9 show the facilities to be controlled, the recommended control system, and the operating conditions under Regulatory Alternative 4. Controls are specified in Tables 6-7, 6-8, and 6-9 for the saturator, coater, asphalt storage tanks, and materials handling.

6.3.5 Regulatory Alternative 5

All facilities are recommended for control in this alternative. The controlled facilities (the saturator and coater, asphalt storage tanks, blowing stills, and materials handling) are displayed in Tables 6-7, 6-8, and 6-9. The control systems for these facilities are also displayed and the operating conditions are specified.

TABLE 6-7. MODEL PLANT CONTROL SYSTEMS FOR REGULATORY ALTERNATIVES 2 TO 5 (SMALL)

Model plant Nos.	Emission source	Emission type	Control system: Type	Control system: Operating temperature °C	Control system: Operating temperature (°F)	Exhause gas characteristics: Airflow Nm^3/s	Exhause gas characteristics: Airflow (DSCFM)	Exhause gas characteristics: Temperature °C	Exhause gas characteristics: Temperature (°F)	Control parameter	Pertinent regulatory alternatives
1-6	Saturator, wet looper, and coater; asphalt storage	Organic particulate	Full enclosure hood with ducts, fan, and:							Particulate	2, 3, 4, 5
			1. Cooler and ESP	38	(100)	4.93	(10,450)	43.3	(110)		
			2. Cooler and HVAF	38	(100)	4.93	(10,450)	38	(100)		
			3. Afterburner with heat recovery	649-760	(1300-1500)[b]	4.93	(10,450)	199	(390)		
1, 3 and 5	Blowing still	Organic particulate	Duct, fan, and afterburner with heat recovery	649-760	(1300-1500)[b]	2.80	(6,000)	199	(390)	Particulate	3, 5
1-6	Materials handling and storage	Inorganic particulate	Duct, fan, and baghouse	Ambient		1.70	(3,600)[d]	Ambient		Opacity	4, 5

[a]Storage tanks are fitted with mist eliminators to be put into service for opacity control when the roofing line and control equipment are shut down for extended periods.
[b]Residence time at temperature of 0.3 to 0.5 seconds.
[c]Granules are not included in materials to be controlled.
[d]Total airflow from four separate sources.

TABLE 6-8. MODEL PLANT CONTROL SYSTEMS FOR REGULATORY ALTERNATIVES 2 TO 5 (MEDIUM)

Model plant Nos.	Emission source	Emission type	Control system: Type	Control system: Operating temperature °C	Control system: Operating temperature (°F)	Exhause gas characteristics: Airflow Nm³/s	Exhause gas characteristics: Airflow (DSCFM)	Exhause gas characteristics: Temperature °C	Exhause gas characteristics: Temperature (°F)	Control parameter	Pertinent regulatory alternatives
1-6	Saturator, wet looper, and coater; asphalt storage	Organic particulate	Full enclosure hood with ducts, fan, and:							Particulate	2, 3, 4, 5
			1. Cooler and ESP	38	(100)	5.07	(10,750)	43.3	(110)		
			2. Cooler and HVAF	38	(100)	5.07	(10,750)	38	(100)		
			3. Afterburner with heat recovery	649-760	(1300-1500)[b]	5.07	(10,750)	199	(390)		
1, 3 and 5	Blowing still	Organic particulate	Duct, fan, and afterburner with heat recovery	649-760	(1300-1500)[b]	2.80	(6,000)	199	(390)	Particulate	3, 5
1-6	Materials handling and storage	Inorganic particulate	Duct, fan, and baghouse	Ambient		2.36	(5,000)[d]	Ambient		Opacity	4, 5

[a]Storage tanks are fitted with mist eliminators to be put into service for opacity control when the roofing line and control equipment are shut down for extended periods.
[b]Residence time at temperature of 0.3 to 0.5 seconds.
[c]Granules are not included in materials to be controlled.
[d]Total airflow from four separate sources.

TABLE 6-9. MODEL PLANT CONTROL SYSTEMS FOR REGULATORY ALTERNATIVES 2 TO 5 (LARGE)

Model plant Nos.	Emission source	Emission type	Control system: Type	Control system: Operating temperature °C	Control system: Operating temperature (°F)	Exhause gas characteristics: Airflow Nm^3/s	Exhause gas characteristics: Airflow (DSCFM)	Exhause gas characteristics: Temperature °C	Exhause gas characteristics: Temperature (°F)	Control parameter	Pertinent regulatory alternatives
1-6	Saturator, wet looper, and coater; asphalt storage	Organic particulate	Full enclosure hood with ducts, fan, and:							Particulate	2, 3, 4, 5
			1. Cooler and ESP	38	(100)	5.14	(10,900)	43.3	(110)		
			2. Cooler and HVAF	38	(100)	5.14	(10,900)	38	(100)		
			3. Afterburner with heat recovery	649-760	(1300-1500)[b]	5.14	(10,900)	199	(390)		
1, 3 and 5	Blowing still	Organic particulate	Duct, fan, and afterburner with heat recovery	649-760	(1300-1500)[b]	3.30	(7,000)	199	(390)	Particulate	3, 5
1-6	Materials handling and storage	Inorganic particulate	Duct, fan, and baghouse	Ambient		2.36	(5,000)[d]	Ambient		Opacity	4, 5

[a]Storage tanks are fitted with mist eliminators to be put into service for opacity control when the roofing line and control equipment are shut down for extended periods.
[b]Residence time at temperature of 0.3 to 0.5 seconds.
[c]Granules are not included in materials to be controlled.
[d]Total airflow from four separate sources.

6.4 REFERENCES FOR CHAPTER 6

1. Memo from Shea, E. P., MRI/NC to 4654-L Project File. May 30, 1979. Calculations for data in Table 6-1.

2. Memo from Shea, E. P., MRI/NC to 4654-L Project File. May, 31, 1979. Calculations for data in Table 6-2.

3. Memo from Shea, E. P., MRI/NC to 4654-L Project File. June 1, 1979. Calculations for data in Table 6-3.

4. Non-Metallic Mineral Processing Plants - Background Information for Proposed Emission Standards. Draft EIS. U.S. Environmental Protection Agency. Research Triangle Park, N.C. March 1979.

5. U.S. Environmental Protection Agency. Priority List and Additions to the List of Categories of Stationary Sources. 40 CFR Part 60. Washington, D.C. Office of the Federal Register. August 21, 1979.

7. ENVIRONMENTAL IMPACT

An assessment of the environmental and energy impacts of regulatory alternatives for the asphalt roofing manufacturing industry is presented in this chapter. Beneficial and adverse impacts on air, water, solid waste, energy, and noise are reviewed.

7.1 AIR POLLUTION IMPACT

In order to determine the impact of regulatory alternatives on air quality, the emissions from a baseline model plant equipped with emission control systems that allow it to meet general State particulate and opacity standards were compared with the emission reductions from the six model plants representing the various regulatory alternatives. An examination of the emission sources (Chapter 3) from the asphalt roofing industry shows that the major air pollutant is particulate emissions from the saturator, coater, asphalt storage, blowing still, and materials handling and storage. The impact on air quality of controlling these emission sources through one of the various regulatory alternatives presented in Figure 6-7, Chapter 6, is assessed in the following subsection.

7.1.1 Particulate Emissions from the Model Plants

As explained in Chapter 6, three model plant sizes (small, medium, and large) and two configurations for each plant size were used. Configuration 1 represents a model plant equipped with a blowing still; Configuration 2 depicts a plant without a blowing still. Each regulatory alternative was applied to each model plant configuration, the total annual baseline particulate emissions were calculated from Tables 6-4, 6-5, 6-6, and the results were tabulated in Table 7-1. Alternative 1 applies only to the baseline model plant (Table 7-1) whose emissions are used for comparison with the reduced emissions from the other model plants under the various regulatory alternatives.

TABLE 7-1. ANNUAL MASS PARTICULATE EMISSIONS FROM BASELINE MODEL PLANTS WITH AND WITHOUT BLOWING STILL (ALTERNATIVE 1)

	Mg/yr	Tons/yr
Total annual particulate emissions from:		
Small baseline plant with blowing still	158	174
Small baseline plant without blowing still	74	82
Total annual particulate emissions from:		
Medium baseline plant with blowing still	257	283
Medium baseline plant without blowing still	89	98
Total annual particulate emissions from:		
Large baseline plant with blowing still	303	334
Large baseline plant without blowing still	94	104

Particulate emissions from the baseline model plants are summarized in Table 7-1. Table 7-2 presents the particulate emissions from the small plant for the two configurations and various regulatory alternatives, while Tables 7-3 and 7-4 show the particulate emissions from the medium and large plants, respectively. An emission limit was assumed in order to calculate the data shown in Tables 7-2, 7-3, and 7-4.

7.1.2 Secondary Air Pollutants

The only secondary air pollutants resulting from the regulatory alternatives are those associated with the use of an afterburner to control emissions from the saturator, coater, and the blowing stills. Emissions of SO_2, CO, and NO_x occur with the use of afterburners. Table 7-5 presents data on these secondary pollutants obtained by EPA from source tests of afterburner performance on a saturator and a blowing still.[1,2]

7.1.3 Dispersion Analysis

Ground-level pollutant concentrations at specific locations downwind from a medium asphalt roofing plant have been estimated using atmospheric dispersion modeling. A description of the Industrial Source Complex (ISC) model used and the results are contained in a report by the H. E. Cramer Company and are summarized in the following subsections.[3,4]

7.1.3.1 Model Description and Input Data. Estimates of the 24-hour average ground-level concentration and the annual average ground-level concentration were made for a network of receptors at various downwind distances from a medium model plant.

The model used accounts for aerodynamic downwash and a large number of sources and receptors and requires input data on sources, receptors, and meteorology. The annual average ground-level concentrations are below the National Ambient Air Quality Standards (NAAQS) for all configurations and regulatory alternatives and are not included in this discussion.

7.1.3.1.1 Source data. The source configuration for a medium model plant was assumed to consist of five stacks that correspond to the five major emission sources. Two sets of operating conditions (baseline and controlled), representing two levels of particulate emission control, were considered in the model calculations for each stack. The data for

TABLE 7-2. ANNUAL MASS PARTICULATE EMISSIONS FROM SMALL PLANTS FOR REGULATORY ALTERNATIVES 2 THROUGH 5

	Mg/yr	tons/yr
Total annual measured particulate emissions from model plant Configuration 1:		
A. Alternative 2	90	99
B. Alternative 4	89	98
Total annual measured particulate emissions from model plant Configuration 1:		
A. Alternative 3	29	32
B. Alternative 5	28	31
Total annual measured particulate emissions from model plant Configuration 2:		
A. Alternatives 2 and 3	6	7
B. Alternatives 4 and 5	5	6

TABLE 7-3. ANNUAL MASS PARTICULATE EMISSIONS FROM MEDIUM PLANTS FOR REGULATORY ALTERNATIVES 2 THROUGH 5

	Mg/yr	tons/yr
Total annual measured particulate emissions from model plant Configuration 1:		
A. Alternative 2	181	200
B. Alternative 4	178	196
Total annual measured particulate emissions from model plant Configuration 1:		
A. Alternative 3	60	66
B. Alternative 5	56	62
Total annual measured particulate emissions from model plant Configuration 2:		
A. Alternatives 2 and 3	14	15
B. Alternatives 4 and 5	10	11

TABLE 7-4. ANNUAL MASS PARTICULATE EMISSIONS FROM LARGE PLANTS FOR REGULATORY ALTERNATIVES 2 THROUGH 5

	Mg/yr	tons/yr
Total annual measured particulate emissions from model plant Configuration 1:		
A. Alternative 2	225	248
B. Alternative 4	223	246
Total annual measured particulate emissions from model plant Configuration 1:		
A. Alternative 3	74	82
B. Alternative 5	71	78
Total annual measured particulate emissions from model plant Configuration 2:		
A. Alternatives 2 and 3	16	18
B. Alternatives 4 and 5	13	14

TABLE 7-5. SUMMARY OF SO_2 AND CO EMISSIONS FROM AFTERBURNERS USED TO CONTROL A SATURATOR AND A BLOWING STILL

Source		SO_2 kg/h	SO_2 (lb/h)	CO kg/h	CO (lb/h)
Afterburner outlet on saturator (Plant B)		ND[a]		16.49	(36.27)
Afterburner outlet on blowing still (Plant E)	Saturant	5.5	(12.1)	13.0	(28.7)
	Coating	6.5	(14.3)	32.3	(71.3)

[a]Not detected.

the baseline and controlled operating conditions are presented in Tables 7-6 and 7-7.

Twelve model plants [three plant sizes (small, medium, and large) each with four configurations] were used to characterize the asphalt roofing industry. The configurations are:

1. C1 - a high velocity air filter (HVAF) or an electrostatic precipitator (ESP) is used to control saturator and coater emissions, and an afterburner (A/B) is used to control asphalt blowing still emissions;

2. C2 - an A/B is used to control saturator and coater emissions, and an A/B is used to control asphalt blowing still emissions;

3. C3 - same as configuration C1, except without asphalt blowing stills; and

4. C4 - same as configuration C2, except without asphalt blowing stills.

The model plants are assumed to be in operation from 0700 to 2300 local standard time on Monday through Friday, 50 weeks per year. With the exception of mineral products delivery and the blowing stills, emissions from the stacks are assumed to be continuous during their respective operating periods. The storage tank mist eliminator is assumed to operate whenever the plant is not in operation.

Five regulatory alternatives were considered for each of the four configurations of asphalt roofing plants. As shown in Table 7-8, these alternatives indicate either baseline or controlled particulate emission levels for the various stacks within each plant.

7.1.3.1.2 Meteorological data. Meteorological data required by the model include hourly values (for an entire year) of:

1. ambient temperature;
2. wind speed;
3. wind direction (nearest 10 degrees); and
4. stability class.

Daily morning and afternoon mixing height data are also required.

In this study, 1964 climatological data for Pittsburgh, Pennsylvania, and Oklahoma City, Oklahoma, were used for comparison purposes. Both data sets are reasonably consistent with meteorological conditions representing maximum impact for short stacks.

TABLE 7-6. STACK AND BUILDING COORDINATES AND DIMENSIONS (ALL PLANT SIZES)

(METRIC)

Stack number	Stack coordinates X(m)	Stack coordinates Y(m)	Stack height (m)	Stack diameter (m)	Building dimensions (m) Height	Building dimensions (m) Length	Building dimensions (m) Width
1	0	0	6.1	0.30	6.7	137	31
2 (HVAF or ESP)	-34	-5	7.6	0.91	6.7	137	31
2 (A/B)	-34	-5	8.5	1.22	6.7	137	31
3	-25	-30	9.1	1.25	10.1	137	31
4	25	-18	12.8	0.45	12.2	137	31
5	30	8	7.6	0.43/0.49[a]	6.7	137	31

(ENGLISH)

Stack number	Stack coordinates X(ft)	Stack coordinates Y(ft)	Stack height (ft)	Stack diameter (ft)	Building dimensions (ft) Height	Building dimensions (ft) Length	Building dimensions (ft) Width
1	0	0	20	1.0	22	450	102
2 (HVAF or ESP)	-111	-16.4	25	3.0	22	450	102
2 (A/B)	-111	-16.4	28	4.0	22	450	102
3	-82	-98.4	30	4.1	33	450	102
4	82	-59	42	1.5	40	450	102
5	98	26	25	1.4/1.6[a]	22	450	102

[a]The first diameter is for small plants; the second is for medium and large plants.

TABLE 7-7. STACK EXIT TEMPERATURE, EXIT VELOCITIES, AND PARTICULATE EMISSION RATES FOR MEDIUM PLANTS

(METRIC)

Stack number	Stack exit temperature (°K)		Stack exit velocity (m/s)		Particulate emission rate[a] (g/s)	
	Baseline	Controlled	Baseline	Controlled	Baseline	Controlled
1	344	344	5.83	5.83	0.52	0.010
2 (HVAF or ESP)	366	311	9.40	8.04	0.68	0.194
2 (A/B)	622	472	8.90	6.75	1.42	0.194
3 (Saturant)	472	472	3.65	3.65	10.33	1.850
3 (Coating)	472	472	3.65	3.65	12.71	2.300
4	Ambient	Ambient	6.54	6.54	0.13	0.013
5	Ambient	Ambient	7.00	7.00	0.17	0.017

[a]Instantaneous rates, valid only during periods when equipment is operating.

TABLE 7-7a. STACK EXIT TEMPERATURE, EXIT VELOCITIES, AND PARTICULATE EMISSION RATES FOR MEDIUM PLANTS

(ENGLISH)

Stack number	Stack exit temperature (°R)		Stack exit velocity (ft/s)		Particulate emission rate[a] (lb/h)	
	Baseline	Controlled	Baseline	Controlled	Baseline	Controlled
1	651	651	19.11	19.11	4.13	0.079
2 (HVAF or ESP)	690	592	30.82	26.36	5.40	1.54
2 (A/B)	1,152	882	29.18	22.13	11.28	1.54
3 (Saturant)	882	882	12.0	12.0	82.05	14.7
3 (Coating)	882	882	12.0	12.0	101	18.27
4	Ambient	Ambient	21.44	21.44	1.03	0.103
5	Ambient	Ambient	23.0	23.0	1.35	0.135

[a]Instantaneous rates, valid only during periods when equipment is operating.

TABLE 7-8. REGULATORY ALTERNATIVES APPLICABLE TO THE TWELVE HYPOTHETICAL ASPHALT ROOFING PLANTS

Regulatory alternative	Emission levels				
	Stack No. 1	Stack No. 2	Stack No. 3	Stack No. 4	Stack No. 5
1	Baseline	Baseline	Baseline	Baseline	Baseline
2	Controlled	Controlled	Baseline	Baseline	Baseline
3	Controlled	Controlled	Controlled	Baseline	Baseline
4	Controlled	Controlled	Baseline	Controlled	Controlled
5	Controlled	Controlled	Controlled	Controlled	Controlled

Climatological data from 1964 were used because these data are complete on an hour-by-hour basis. These data are considered to be meteorologically representative. The model rejects days with questionable wind directions (which are often associated with light winds).

7.1.3.1.3 Receptor data. The model calculates concentration impacts for receptors at specified radial distances from the source. Preliminary calculations indicated that maximum 24-hour average ground-level particulate concentrations occured at downwind distances of less than 300 meters. For modeling purposes, the maximum concentrations were assumed to occur at the property boundary.

Stack No. 1 is at the approximate center of the emission points of the model asphalt roofing plants. Receptor rings were centered on stack No. 1 at distances of 0.34 km (115 ft) (the property boundary) and 2 km (1.2 mi). Each ring has receptors at 10 degree intervals for a total of 36 receptors per ring. All receptors were assumed to be at the same elevation as plant grade. The only terrain effects included in the model calculations were those implicitly contained in the meteorological data.

7.1.3.2 Twenty-Four Hour Maximum Concentration Impacts. The maximum 24-hour average ground-level particulate concentrations calculated for each stack are listed in Table 7-9 for both the baseline and controlled emission levels. The maximum 24-hour average ground-level particulate concentrations which occur at the assumed plant boundary (centered on stack No. 1) for the combined emissions from medium asphalt roofing plants are given in Table 7-10. The 24-hour average ground-level particulate concentration data are given for each regulatory alternative, each stack, and for each plant configuration. The modeled concentration impacts can be compared to the National Ambient Air Quality Standard (NAAQS):

Averaging time	Standard type	Particulate concentration $\mu g/m^3$	gr/dscf
24-hour maximum (not to be exceeded more than once per year)	Primary	260	1.14×10^{-4}
	Secondary	150	0.66×10^{-4}

Table 7-11 compares the maximum 24-hour average ground-level particulate concentrations calculated for the same model plant located in

TABLE 7-9. CALCULATED MAXIMUM 24-HOUR AVERAGE GROUND-LEVEL PARTICULATE CONCENTRATIONS FOR THE INDIVIDUAL STACKS AT MEDIUM ASPHALT ROOFING PLANTS

(METRIC)

Stack number	Concentration ($\mu g/m^3$) Plant boundary Baseline	Controlled
1	40.7	0.783
2 (HVAF or ESP)	15.7	7.09
2 (A/B)	6.67	2.32
3	220	39.6
4	4.47	0.447
5	7.01	0.701

(ENGLISH)

Stack number	Concentration (lb/ft^3) Plant boundary Baseline	Controlled
1	254.4×10^{-9}	4.9×10^{-11}
2 (HVAF or ESP)	98.1×10^{-11}	44.3×10^{-11}
2 (A/B)	41.7×10^{-11}	14.5×10^{-11}
3	13.8×10^{-9}	2.5×10^{-9}
4	27.9×10^{-11}	2.8×10^{-11}
5	43.8×10^{-11}	4.4×10^{-11}

TABLE 7-10. MAXIMUM 24-HOUR AVERAGE CONCENTRATIONS CALCULATED AT THE PLANT BOUNDARY FOR THE COMBINED STACKS OF THE MEDIUM ASPHALT ROOFING PLANTS

Configuration C1

(METRIC)

Stack number	Concentration ($\mu g/m^3$)				
	Reg. Alt. 1	Reg. Alt. 2	Reg. Alt. 3	Reg. Alt. 4	Reg. Alt. 5
1	0.706	0.0136	0.0136	0.0136	0.0136
2	15.1	6.06	6.06	6.06	6.06
3	220	220	39.6	220	39.6
4	1.71	1.71	1.71	0.171	0.171
5	1.64	1.64	1.64	0.164	0.164
All stacks	239	229	49.1	226	46.0

TABLE 7-10. MAXIMUM 24-HOUR AVERAGE CONCENTRATIONS CALCULATED AT THE PLANT BOUNDARY FOR THE COMBINED STACKS OF THE MEDIUM ASPHALT ROOFING PLANTS (continued)

Configuration C2

(METRIC)

Stack number	Concentration ($\mu g/m^3$)				
	Reg. Alt. 1	Reg. Alt. 2	Reg. Alt. 3	Reg. Alt. 4	Reg. Alt. 5
1	0.706	0.0136	0.117	0.0136	0.0136
2	3.97	1.87	1.98	1.87	1.87
3	220	220	35.8	220	39.6
4	1.71	1.71	2.24	0.171	0.171
5	1.64	1.64	5.96	0.164	0.164
All stacks	228	225	46.1	222	41.8

TABLE 7-10. MAXIMUM 24-HOUR AVERAGE CONCENTRATIONS CALCULATED AT THE PLANT BOUNDARY FOR THE COMBINED STACKS OF THE MEDIUM ASPHALT ROOFING PLANTS (continued)

Configuration C3

(METRIC)

Stack number	Concentration ($\mu g/m^3$)				
	Reg. Alt. 1	Reg. Alt. 2	Reg. Alt. 3	Reg. Alt. 4	Reg. Alt. 5
1	14.2	0.272	0.272	0.272	0.272
2	15.7	7.09	7.09	7.09	7.09
4	3.41	3.41	3.41	0.341	0.341
5	5.59	5.59	5.59	0.559	0.559
All stacks	38.8	16.4	16.4	8.26	8.26

TABLE 7-10. MAXIMUM 24-HOUR AVERAGE CONCENTRATIONS CALCULATED AT THE PLANT BOUNDARY FOR THE COMBINED STACKS OF THE MEDIUM ASPHALT ROOFING PLANTS (concluded)

Configuration C4

(METRIC)

Stack number	Concentration ($\mu g/m^3$)				
	Reg. Alt. 1	Reg. Alt. 2	Reg. Alt. 3	Reg. Alt. 4	Reg. Alt. 5
1	23.5	0.272	0.272	0.083	0.083
2	0.781	1.44	1.44	2.32	2.32
4	1.77	3.41	3.41	0.223	0.223
5	3.66	5.59	5.59	0.474	0.474
All stacks	29.7	10.7	10.7	3.03	3.03

TABLE 7-10a. MAXIMUM 24-HOUR AVERAGE CONCENTRATIONS CALCULATED AT THE PLANT BOUNDARY FOR THE COMBINED STACKS OF THE MEDIUM ASPHALT ROOFING PLANTS

Configuration C1

(ENGLISH)

Stack number	Concentration (lb/ft^3)				
	Reg. Alt. 1	Reg. Alt. 2	Reg. Alt. 3	Reg. Alt. 4	Reg. Alt. 5
1	4.4×10^{-11}	8.5×10^{-13}	8.5×10^{-13}	8.5×10^{-13}	8.5×10^{-13}
2	9.4×10^{-10}	3.8×10^{-10}	3.8×10^{-10}	3.8×10^{-10}	3.8×10^{-10}
3	13.8×10^{-9}	13.8×10^{-9}	2.5×10^{-9}	13.8×10^{-9}	2.5×10^{-9}
4	1.1×10^{-10}	1.1×10^{-10}	1.1×10^{-10}	1.1×10^{-11}	1.1×10^{-11}
5	1.0×10^{-10}	1.0×10^{-10}	1.0×10^{-10}	1.0×10^{-11}	1.0×10^{-11}
All stacks	14.9×10^{-9}	14.3×10^{-9}	3.1×10^{-9}	14.1×10^{-9}	2.9×10^{-9}

TABLE 7-10a. MAXIMUM 24-HOUR AVERAGE CONCENTRATIONS CALCULATED AT THE PLANT BOUNDARY FOR THE COMBINED STACKS OF THE MEDIUM ASPHALT ROOFING PLANTS (continued)

Configuration C2

(ENGLISH)

Stack number	Concentration (lb/ft^3)				
	Reg. Alt. 1	Reg. Alt. 2	Reg. Alt. 3	Reg. Alt. 4	Reg. Alt. 5
1	4.4×10^{-11}	8.5×10^{-13}	7.3×10^{-12}	8.5×10^{-13}	8.5×10^{-13}
2	2.5×10^{-10}	1.2×10^{-10}	1.2×10^{-10}	1.2×10^{-10}	1.2×10^{-10}
3	13.8×10^{-9}	13.8×10^{-9}	2.2×10^{-9}	13.8×10^{-9}	2.5×10^{-9}
4	1.1×10^{-10}	1.1×10^{-10}	1.4×10^{-10}	1.1×10^{-11}	1.1×10^{-11}
5	1.0×10^{-10}	1.0×10^{-10}	3.7×10^{-10}	1.0×10^{-11}	1.0×10^{-11}
All stacks	14.25×10^{-9}	14.1×10^{-9}	2.9×10^{-9}	13.9×10^{-9}	2.6×10^{-9}

TABLE 7-10a. MAXIMUM 24-HOUR AVERAGE CONCENTRATIONS CALCULATED AT THE PLANT BOUNDARY FOR THE COMBINED STACKS OF THE MEDIUM ASPHALT ROOFING PLANTS (continued)

Configuration C4

(ENGLISH)

Stack number	Concentration (lb/ft^3)				
	Reg. Alt. 1	Reg. Alt. 2	Reg. Alt. 3	Reg. Alt. 4	Reg. Alt. 5
1	1.5×10^{-9}	1.7×10^{-11}	1.7×10^{-11}	5.2×10^{-12}	5.2×10^{-12}
2	4.9×10^{-11}	9.0×10^{-11}	9.0×10^{-11}	1.5×10^{-10}	1.5×10^{-10}
4	1.1×10^{-10}	2.1×10^{-10}	2.1×10^{-10}	1.4×10^{-11}	1.4×10^{-11}
5	2.3×10^{-10}	3.5×10^{-10}	3.5×10^{-10}	2.9×10^{-10}	2.9×10^{-10}
All stacks	1.9×10^{-9}	6.7×10^{-9}	6.7×10^{-9}	1.9×10^{-10}	1.9×10^{-10}

TABLE 7-10a. MAXIMUM 24-HOUR AVERAGE CONCENTRATIONS CALCULATED AT THE PLANT BOUNDARY FOR THE COMBINED STACKS OF THE MEDIUM ASPHALT ROOFING PLANTS (continued)

Configuration C3

(ENGLISH)

Stack number	Concentration (lb/ft^3)				
	Reg. Alt. 1	Reg. Alt. 2	Reg. Alt. 3	Reg. Alt. 4	Reg. Alt. 5
1	8.9×10^{-10}	1.7×10^{-11}	1.7×10^{-11}	1.7×10^{-11}	1.7×10^{-11}
2	9.8×10^{-10}	4.4×10^{-10}	4.4×10^{-10}	4.4×10^{-10}	4.4×10^{-10}
4	2.1×10^{-10}	2.1×10^{-10}	2.1×10^{-10}	2.1×10^{-11}	2.1×10^{-11}
5	3.5×10^{-10}	3.5×10^{-10}	3.5×10^{-10}	3.5×10^{-11}	3.5×10^{-11}
All stacks	2.4×10^{-9}	1.0×10^{-9}	1.0×10^{-9}	5.2×10^{-10}	5.2×10^{-10}

TABLE 7-11. MAXIMUM 24-HOUR AVERAGE PARTICULATE CONCENTRATIONS CALCULATED FOR MEDIUM CONFIGURATION C1 ASPHALT ROOFING PLANTS (REGULATORY ALTERNATIVE 1) LOCATED IN THE PITTSBURGH AND OKLAHOMA CITY AREAS

(METRIC)

Stack number	Concentration ($\mu g/m^3$)	
	Oklahoma City	Pittsburgh
1	7.47	0.706
2	13.1	15.1
3	210	220
4	1.11	1.71
5	1.04	1.64
All stacks	233	239

(ENGLISH)

Stack number	Concentration (lb/ft^3)	
	Oklahoma City	Pittsburgh
1	46.7×10^{-11}	4.4×10^{-11}
2	81.9×10^{-11}	94.4×10^{-11}
3	13.1×10^{-9}	13.8×10^{-9}
4	6.9×10^{-11}	10.7×10^{-11}
5	6.5×10^{-11}	10.3×10^{-11}
All stacks	14.6×10^{-9}	15.0×10^{-9}

the Pittsburgh and Oklahoma City areas. The maximum 24-hour concentrations for the two locations are essentially the same because the climatological conditions were similar for both areas.

The maximum 24-hour average particulate concentrations calculated for the combined stacks of the medium asphalt roofing plants are presented in Table 7-12 for each regulatory alternative and each plant configuration. The maximum concentrations for configurations C1 and C2 are significantly higher than the corresponding concentrations for configurations C3 and C4 because the latter configurations do not include blowing stills. The results of the dispersion modeling indicate that the 24-hour maximum concentration (260 $\mu g/m^3$) is not exceeded under any of the control modes, Regulatory Alternatives 1 through 5. The secondary 24-hour maximum ambient air concentration (150 $\mu g/m^3$) would be exceeded by plants controlled under Regulatory Alternatives 1, 2, and 4. The 24-hour maximum ambient air concentration for a plant controlled under Regulatory Alternative 3 would be 49.1 $\mu g/m^3$ (3.1×10^9 lb/ft^3) and for Regulatory Alternative 5 would be 46 $\mu g/m^3$ (2.9×10^9 lb/ft^3). Regulatory Alternative 1 is the baseline condition (no NSPS), and Alternatives 2 through 5 show decreases in particulate emissions from the baseline level. Configuration C1 shows a decrease in emissions of 4.2 percent for Alternative 2, 80 percent for Alternative 3, 5.5 percent for Alternative 4, and 81 percent for Alternative 5. Configuration C2 shows a decrease in emissions of 1.4 percent for Alternative 2, 80 percent for Alternative 3, 2.7 percent for Alternative 4, and 82 percent for Alternative 5. These results are based on calculations for asphalt roofing plants assumed to be located in the Pittsburgh, Pennsylvania urban area.

7.1.4 Incremental Impact of Regulatory Alternatives

Table 7-13 presents a summary of the annual total particulate emissions from the model plants under the various regulatory alternatives and also shows the percent particulate emissions reduction achieved through the regulatory alternatives. It is readily apparent that blowing stills are the largest source of particulate air pollution in the asphalt roofing industry. Table 7-13 shows that by adding a mist eliminator to the asphalt storage tanks and by improving saturator and coater control systems (Alternative 2, Configuration 1), the particulate emission reduction from

TABLE 7-12. MAXIMUM 24-HOUR AVERAGE PARTICULATE CONCENTRATIONS CALCULATED FOR THE COMBINED STACKS OF THE MEDIUM-SIZE ASPHALT ROOFING PLANTS

(METRIC)

Plant configuration	Concentration ($\mu g/m^3$)				
	Reg. Alt. 1	Reg. Alt. 2	Reg. Alt. 3	Reg. Alt. 4	Reg. Alt. 5
C1	239	229	49.1	226	46.0
C2	228	225	46.1	222	41.8
C3	38.8	16.4	16.4	8.26	8.26
C4	29.7	10.7	10.7	3.03	3.03

(ENGLISH)

Plant configuration	Concentration (lb/ft^3)				
	Reg. Alt. 1	Reg. Alt. 2	Reg. Alt. 3	Reg. Alt. 4	Reg. Alt. 5
C1	14.9×10^{-9}	14.3×10^{-9}	3.1×10^{-9}	14.1×10^{-9}	2.9×10^{-9}
C2	14.3×10^{-9}	14.1×10^{-9}	2.9×10^{-9}	13.9×10^{-9}	2.6×10^{-9}
C3	2.4×10^{-9}	1.0×10^{-9}	1.0×10^{-9}	5.2×10^{-10}	5.2×10^{-10}
C4	1.9×10^{-9}	7.0×10^{-10}	6.7×10^{-10}	1.9×10^{-10}	1.9×10^{-10}

TABLE 7-13. SUMMARY OF ANNUAL TOTAL PARTICULATE EMISSIONS FROM MODEL PLANT CONFIGURATION 1 AND 2 (ALL SIZES) UNDER THE VARIOUS REGULATORY ALTERNATIVES AND THE PERCENT REDUCTION IN EMISSIONS FROM THE BASELINE MODEL PLANT FOR THE VARIOUS ALTERATIVES

Alternative number	Plant configuration	Small plant[a]		Medium plant[a]		Large plant[a]		Percent reduction from baseline		
		Mg/yr	tons/yr	Mg/yr	tons/yr	Mg/yr	tons/yr	Small	Medium	Large
1	Configuration 1 ESP/HVAF or afterburner[b] Afterburner[c]	158	174	257	283	303	334	--	--	--
	Configuration 2 ESP/HVAF or afterburner[d]	74	82	89	98	94	104	--	--	--
2	Configuration 1 (unregulated blow still)	90	99	181	200	225	248	43	29	25
2,3	Configuration 2	6	7	14	15	16	18	90	85	83
3	Configuration 1 (regulated blow still)	29	32	60	66	74	82	82	77	75
4	Configuration 1 (unregulated blow still)	89	98	178	196	223	246	44	31	26
4,5	Configuration 2	5	6	10	11	13	14	96	96	96
5	Configuration 1 (regulated blow still)	28	31	56	62	71	78	82	78	77

[a]All model plants under Alternatives 2 to 5 are equipped with mist eliminators on their asphalt storage tanks.
[b]All devices have identical efficiencies in baseline model plant for control of saturator and coater.
[c]Afterburner control efficiency 77.7 percent for blowing still control in baseline model plant.
[d]Afterburner, HVAF, and ESP efficiency 95 percent in Alternatives 2 to 5.

the baseline values averages about 15 percent. On the other hand, by controlling the blowing still emissions (Alternative 3, Configuration 1) the average reduction in emissions from the baseline case is nearly 88 percent.

Improvement in emissions control from Alternatives 2 and 3 (Configuration 2) to Alternatives 4 and 5 (Configuration 2) is due to equipping the materials handling and storage facility with a baghouse. For Alternative 5, the most stringent of the regulatory alternatives, the reduction in emissions from the baseline averaged over 90 percent.

7.2 WATER POLLUTION IMPACT

The model plant designs under the regulatory alternatives are equipped with a water spray injection system for cooling the gas streams prior to the control device.

Cooling of the gas stream is accomplished by evaporation of the water. About 80 percent of the water is evaporated and the remainder is recirculated. The water-oil mixture is discharged into a sump and the oil is skimmed off and reclaimed for use as fuel. The water from the sump is pumped to the recirculation tank where fresh water is added to replace the water lost by evaporation. Approximately one percent of the recirculated water will have to be disposed of in the plant's waste water treatment system. The increased quantity of waste water generated by the adoption of the regulatory alternative will have a very small impact.

7.3 SOLID WASTE DISPOSAL

The type of solid waste most commonly generated by the control devices is the particulate emissions that are removed by the ESP or HVAF and baghouse. The ESP and HVAF remove solid asphalt particles and liquid asphalt droplets; the baghouse removes dust particles from the material handling and storage area. These materials are generally recycled into the appropriate phase of the manufacturing process. The filter elements from the HVAF units must be replaced when they are saturated. Current practice is to dispose of spent filters in a landfill. There will be a small increase in waste filter elements caused by the regulatory alternatives. The increase in filter material to be disposed cannot be quantified. However, the impact on solid waste disposal will be small.

The afterburners, operating at a temperature of 760°C (1400°F), incinerate the particulate hydrocarbon (asphalt) emissions. Assuming that the heating value and ash production is similar to No. 6 high sulfur fuel oil, the quantity of ash generated from a large roofing plant with afterburners on its saturator, coaters, and blowing stills is approximately 0.2 Mg/yr (0.24 ton/yr).[5] This ash is emitted as particulate and is not collected as a solid waste. There should be no impact on solid waste disposal.

7.4 ENERGY IMPACT

The energy impact of alternative control systems and standards can be assessed by determining the additional energy consumption requirements for the model plants above the baseline plant. The increases in energy requirements for Regulatory Alternatives 2 through 5 result from the addition of a mist eliminator with a 5- to 10-hp fan to the asphalt storage tanks, the addition of a cooling system with two water pumps (10 hp) to the ESP and HVAF, the increase of afterburner operating temperatures from 482° to 760°C (900° to 1400°F), and the substitution of a fabric filter (baghouse) for the cyclone in the material handling and storage area.

7.4.1 Incremental Impact for Regulatory Alternatives

Table 7-14 shows the electricity requirements, over and above the baseline electrical demand, that are created by implementing any of the various regulatory alternatives. The electricity increase from Alternative 2 to Alternative 4 and from Alternative 3 to Alternative 5 is due to the replacement of the cyclone with a baghouse in the material handling and storage area. The regulatory alternatives have no impact on the electrical requirements for afterburners. The electrical increases created by the regulatory alternatives constitute only a small energy impact. For example, the elctricity requirement of a large baseline roofing plant with ESP is 2.79×10^{13} J/yr (7.75×10^{6} kWh/yr) (Table 6-3). The electrical increase created by implementing Regulatory Alternatives 4 or 5 is 0.558×10^{10} J/yr (0.16×10^{6} kWh/yr), which is a 2 percent increase over the baseline demand.

For those plants that choose to use afterburners on their saturator and coater and for those plants with blowing stills, the increase in fuel

TABLE 7-14. ELECTRICITY INCREASE OVER BASELINE ELECTRICAL DEMAND FOR REGULATORY ALTERNATIVES 2, 3, 4, AND 5

Emission source	Control system	Required under what alternative	Electricity increase over baseline demand: Small plant J/yrx10^7	Small plant kWh/yr	Medium plant J/yrx10^7	Medium plant kWh/yr	Large plant J/hrx10^7	Large plant kWh/yr
Saturator-coater	1. Precooled ESP and HVAF	2, 3, 4, 5	12,600	35,000	25,200	70,000	37,800	105,000
	2. Afterburner W/HR		0	0	0	0	0	0
Asphalt storage	Mist eliminator	2, 3, 4, 5	3,900	11,000	5,000	14,000	6,000	16,000
Material handling and storage	Baghouse (replaces cyclone)	4, 5	6,900	19,000	12,000	34,000	12,000	34,000
Blowing still	Afterburner W/HR		0	0	0	0	0	0
Total electricity increase over the baseline demand for the regulatory alternatives:								
Alternatives 2 and 3 with precooled ESP/HVAF			16,500	46,000	30,200	84,000	43,800	121,000
Alternatives 4 and 5 with precooled ESP/HVAF			23,400	65,000	42,200	118,000	55,800	155,000

requirements produced by the increase in afterburner operating temperature is substantial. Table 7-15 shows the annual fuel requirements for the different regulatory alternatives and plant configurations. For Alternatives 2 and 4, Configuration 1 (unregulated blowing stills), increasing the operating temperature of the afterburner controlling the saturator and coater, increases the afterburner fuel requirement over 49 percent for a large plant. When operating temperatures are increased on both afterburners (Alternatives 3 and 5, Configuration 1), the afterburner fuel requirement increases from the baseline operation by over 60 percent for a large plant.

The liquid hydrocarbon particulate emissions have a significant heating value [39,564 J/m^3 (142,000 Btu/gal)]. When the blowing still afterburner operating temperature is increased, the large volume of particulates incinerated will supply part of the heat required.

Assuming there will be an addition of three medium plants with stills, and afterburners controlling the saturators, the increase in energy from the baseline for Regulatory Alternative 5 in 1984 will be:

1. natural gas - 28.5×10^{12} J/yr (2.7×10^5 therms/yr);
2. oil - 2,217 m^3/yr (14,000 barrels/yr).

This energy increase is the equivalent of 11,000 m^3/yr (69,000 barrels/yr) of oil for three medium plants.

The 1984 increase in energy for plants using the ESP or HVAF control device on the saturator and coater will be:

1. natural gas - 6.4×10^{12} J/yr (4.9×10^5 therms/yr);
2. fuel oil - 498 m^3/yr (3,100 barrels/yr);
3. electricity - 1.26×10^{12} J/yr (3.7×10^5 kWh/yr).

This is equivalent to 609 m^3/yr (4,320 barrels/yr) of oil for three medium plants.

7.5 OTHER ENVIRONMENTAL IMPACTS

7.5.1 Noise Impact

The only noise-producing additions that would be made under any of the alternatives are the addition of a small water pump in the ESP or HVAF precooler and the addition of a small fan in the mist eliminator system on the asphalt storage tanks.

TABLE 7-15. ANNUAL ENERGY REQUIREMENT FOR AFTERBURNERS AND PERCENT FUEL INCREASE FROM BASELINE MODEL PLANT FOR THE VARIOUS REGULATORY ALTERNATIVES

Alternative number	Plant configuration	Afterburner specifications Saturator and coater = S-C Blow still = BS			Fuel requirements[a]						Percent fuel increase from baseline		
		Emission source	Operating temperature		Small plant		Medium plant		Large plant				
			C	(F)	m^3/hr	(gal/yr)	m^3/yr	(gal/yr)	m^3/yr	(gal/yr)	Small plant	Medium plant	Large plant
1	Configuration 1	S-C	482	(900)	566	(149,600)	1,123	(296,700)	1,664	(439,700)	--	--	--
		BS	482	(900)	118	(31,200)	236	(62,400)	276	(72,800)	--	--	--
1	Configuration 2	S-C	482	(900)	566	(149,600)[b]	1,123	(296,700)[c]	1,664	(439,700)[d]	--	--	--
2,4	Configuration 1 (unregulated blow still)	S-C	760	(1400)	889	(234,800)	1,766	(466,400)	2,616	(691,200)	47.1	47.3	49.1
		BS	482	(900)	118	(31,200)	236	(62,400)	276	(72,800)			
2,3,4,5	Configuration 2	S-C	760	(1400)	889	(234,800)	1,766	(466,400)	2,616	(691,200)	57.0	57.2	57.2
3,5	Configuration 1 (regulated blow still)	S-C	760	(1400)	889	(234,800)	1,766	(466,400)	2,616	(691,200)	57.0	57.2	57.2
		BS	760	(1400)	213	(56,400)	427	(112,800)	499	(131,600)	80.5	80.9	80.7

[a]Fuel requirements are based on a fuel heating value of 39,564 J/m^3 (142,000 Btu/gal).
[b]Air flow of blow still afterburner is 2.83 Nm^3/s (6,000 scfm). Saturator and coater have one 4.93 Nm^3/s (10,450 scfm) afterburner. Afterburners are assumed to have a 78 percent operating efficiency and a 50 percent heat recovery.
[c]Air flow of blow still afterburner is 2.83 Nm^3/s (6,000 scfm). Saturator and coaters have one 5.07 Nm^3/s (10,750 scfm) afterburner and one 4.72 Nm^3/s (10,000 scfm) afterburner. Afterburners are assumed to have a 78 percent operating efficiency and a 50 percent heat recovery.
[d]Air flow of blow still afterburner is 3.30 Nm^3/s (7,000 scfm). Saturator and coaters have one 5.14 Nm^3/s 10,900 scfm) afterburner and two 4.72 Nm^3/s (10,000 scfm) afterburners. Afterburners are assumed to have a 78 percent operating efficiency and a 50 percent heat recovery.

It is not expected that these changes to the baseline plant will provide any significant additional noise to the existing levels in the plants.

7.6 OTHER ENVIRONMENTAL CONCERNS

7.6.1 Irreversible and Irretrievable Commitment of Resources

One option of the regulatory alternatives entails an increase in operating temperature of afterburners which increases their fuel consumption, and this option must be viewed as the irreversible and irretrievable commitment of a resource. It should be noted that no alternative control system for blowing stills, other than afterburners, was considered.

7.7 REFERENCES FOR CHAPTER 7

1. Particulate and Gaseous Emissions from the Asphalt Roofing Process Saturator at the CertainTeed Products Plant, Shakopee, Minnesota. U.S. Environmental Protection Agency. Research Triangle Park, N.C. EPA 76-ARM-12. May 1977.

2. Particulate and Gaseous Emissions from the Asphalt Roofing Process Blowing Still at the Elk Roofing Plant, Stephens, Arkansas. U.S. Environmental Protection Agency. Research Triangle Park, N.C. EPA 76-ARM 11. May 1977.

3. Dispersion Model Analysis of the Air Quality Impact of Particulate Emissions from Asphalt Roofing Plants. U.S. Environmental Protection Agency. Research Triangle Park, N.C. EPA 68-02-3323. February 1980.

4. Industrial Source Complex (ISC) Dispersion Model Users Guide. U.S. Environmental Protection Agency, Research Triangle Park, N.C. EPA 450/4-79-031. December 1979.

5. Perry, R. H. and C. H. Chilton. Chemical Engineers' Handbook. 4th ed. New York, McGraw-Hill, 1963.

8. ECONOMIC IMPACT

This chapter contains three sections: (1) industry characterization; (2) cost analysis of regulatory alternatives; and (3) other cost considerations. The first section describes the asphalt roofing industry's products, production plants, production output, industry employment, product markets and sales, product prices, and historical and future trends of various aspects of the industry. The second section analyzes the capital and annual operating costs and cost effectiveness of particulate pollution control devices installed in new facilities and modified/reconstructed facilities for six configurations of three model plant sizes for each of the five regulatory options. The third section summarizes the costs of other environmental regulatory requirements on facilities in the industry and discusses the impacts of standards on the budgets and resources of various regulatory and enforcement agencies.

8.1 INDUSTRY CHARACTERIZATION

The asphalt roofing industry began in this country in 1893 and has grown until it now supplies over 80 percent of the roofing applied in this country. The industry is comprised of a group of 118 manufacturing plants scattered throughout the United States. These plants produce asphalt roofing and siding shingles, asphalt roofing and siding rolls, and saturated felts. There are also 42 plants that blow asphalt and sell saturant and coating asphalt to asphalt roofing plants; 17 of these blowing still installations are at oil refineries.

8.1.1 General Profile

The description of the industry presented in this section discusses the following characteristics of the industry: (1) products, (2) production plants, (3) asphalt and product production, (4) industry employment, (5) product markets, (6) product prices, and (7) historical and future trends. Each of these topics is discussed below.

8.1.1.1 Raw Materials and Products. The basic raw materials and intermediate products used in the asphalt roofing industry to produce roofing and siding products are: (1) dry felts and fiber glass mats, (2) asphalt, (3) mineral stabilizers, and (4) fine and coarse mineral surfacings. Figure 8-1 shows these raw materials and intermediate products and their relationship to the finished products.

Dry felt is made from various combinations of rags, paper fibers, wood fibers, and other cellulose fibers which are blended to form an acceptable felt for roofing products. The felt is made from fibers prepared by various pulping methods similar to papermaking processes. Fiber glass mats are produced from thin glass fibers bonded with plastic binders. Some roofing plants produce their own dry felt, while others purchase the dry felt or fiber glass mats from other manufacturers.

Asphalt is used to preserve, waterproof, and increase the durability and usefulness of roofing and siding products. The asphalt used in the industry is divided into saturant and coating asphalt and is produced from asphalt flux, a product of the fractional distillation of crude oil. Some roofing manufacturers produce their own saturant and coating asphalts from the flux while others purchase the prepared asphalt from refineries or asphalt processors. The asphalt is prepared by blowing air through the hot flux to raise the temperature at which it will soften. The softening point of saturant asphalt is between 40.55°C (105°F) and 74°C (165°F) and runs as high as 127°C (260°F) for coating asphalt.[1] Tables 8-1 through 8-3a list the ASTM specifications for roll roofing saturants, shingle saturants, and coating asphalt, respectively.

Coating asphalt is usually stabilized by adding finely divided minerals to make the asphalt more shatter- and shock-proof in cold weather and more resistant to weathering. Typical mineral stabilizers include talc, silica, dolomite, slate dust, trap rock, and micaceous materials.

Fine mineral surfacing materials, primarily talc and sand, are dusted: (1) on the back of shingles to prevent them from sticking to each other; (2) on the back of mineral-surfaced roll roofing to prevent the convolutions of the roll from sticking together; and (3) on surfaces of smooth roll roofing to prevent sticking. These materials adhere to the product during storage and handling.

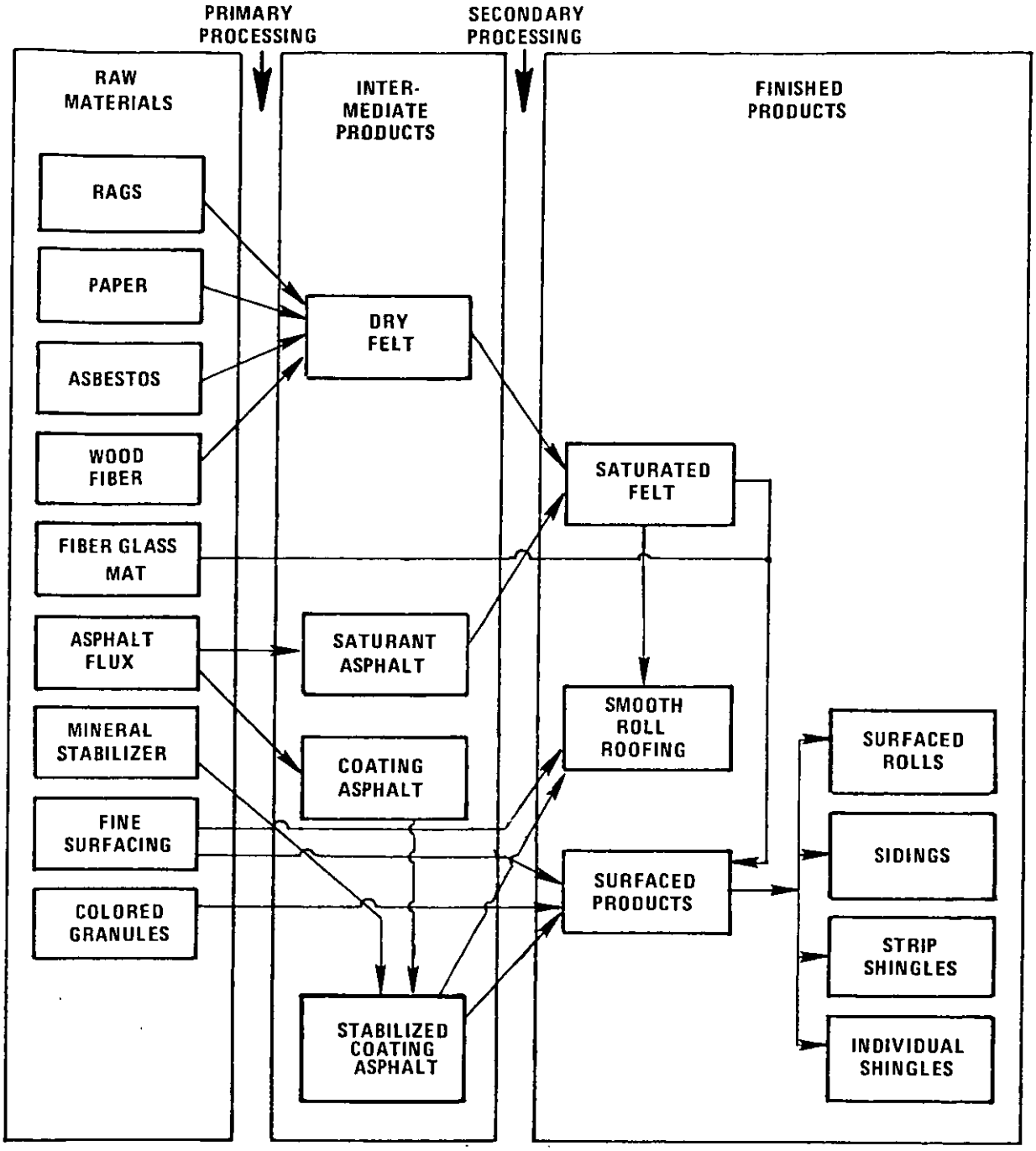

Figure 8-1. Processing chart for asphalt roofing products, from raw materials to finished roofing.[2]

TABLE 8-1. ASTM SPECIFICATIONS FOR ROLL ROOFING SATURANTS (METRIC)[3]

Characteristics	ASTM Specifications
Specific gravity at 15.55°C	0.99 - 1.035
Softening point (R and B) °C	40.55 - 46.1
Penetration at	
0°C, 200 g, 60 s	30 up
25°C, 100 g, 5 s	90 - 150
Flash point (C.O.C.) °C	232 up
Loss in 5 h at 162.8°C (50g)	Below 1%
Loss in penetration after heating	Below 20%
Soluble in carbon tetrachloride	Over 99%
Viscosity, Saybolt Furol, at	
121°C	Under 350
149°C	Under 100
177°C	Under 40
204°C	--
Foam test, seconds for first clear spot	Under 300
Compatibility with coating at 54°C for 72 h	Under 1.5 mm
Oliensis heterogeneity, test for 24 h	Negative

TABLE 8-1a. ASTM SPECIFICATIONS FOR ROLL ROOFING SATURANTS (ENGLISH)[3]

Characteristics	ASTM Specifications
Specific gravity at 60°F	0.99 - 1.035
Softening point (R and B) °F	105 - 115
Penetration at	
32°F, 0.44 lb, 60 s	30 up
77°F, 0.22 lb, 5 s	90 - 150
Flash point (C.O.C.) °F	450 up
Loss in 5 h at 325°F (0.11 lb)	Below 1%
Loss in penetration after heating	Below 20%
Soluble in carbon tetrachloride	Over 99%
Viscosity, Saybolt Furol, at	
250°F	Under 350
300°F	Under 100
350°F	Under 40
400°F	--
Foam test, seconds for first clear spot	Under 300
Compatibility with coating at 130°F for 72 h	Under 0.55 in.
Oliensis heterogeneity, test for 24 h	Negative

TABLE 8-2. ASTM SPECIFICATIONS FOR SHINGLE SATURANTS (METRIC)[3]

Characteristics	ASTM Specifications
Specific gravity at 15.55°C	1.0 - 1.04
Softening point (R and B) °C	63 - 74
Penetration at	
0°C, 200 g, 60 s	10 up
25°C, 100 g, 5 s	25 - 40
46°C, 50 g, 5 s	Under 115
Ductility at 25°C	10 cm up
Flash point (C.O.C.) °C	246 up
Loss in 5 h at 163°C (50g)	Under 0.5%
Loss in penetration after heating	Under 20%
Soluble in carbon tetrachloride	Over 99%
Viscosity at	
177°C	Under 140 Furol
204°C	Under 60 Furol
232°C	Under 30 Furol
Foam test, seconds for first clear spot	Under 300
Compatibility with coating at 54°C for 72 h	Under 0.3 mm
Oliensis heterogeneity, test for 24 h	Negative

TABLE 8-2a. ASTM SPECIFICATIONS FOR SHINGLE SATURANTS (ENGLISH)[3]

Characteristics	ASTM Specifications
Specific gravity at 60°F	1.0 - 1.04
Softening point (R and B) °F	145 - 165
Penetration at	
32°F, 0.44 lb, 60 s	10 up
77°F, 0.22 lb, 5 s	25 - 40
115°F, 0.11 lb, 5 s	Under 115
Ductility at 77°F	3.94 in.
Flash point (C.O.C.) °F	475 up
Loss in 5 h at 325°F (0.11 lb)	Under 0.5%
Loss in penetration after heating	Under 20%
Soluble in carbon tetrachloride	Over 99%
Viscosity at	
350°F	Under 140 Furol
400°F	Under 60 Furol
450°F	Under 30 Furol
Foam test, seconds for first clear spot	Under 300
Compatibility with coating at 130°F for 72 h	Under 0.012 in.
Oliensis heterogeneity, test for 24 h	Negative

TABLE 8-3. ASTM SPECIFICATIONS FOR COATING ASPHALTS (METRIC)[3]

Characteristics	ASTM Specifications
Specific gravity at 15.55°C	1.005 - 1.045
Softening point (R and B) °C	102 - 116
Penetration at	
0°C, 200 g, 60 s	10 up
25°C, 100 g, 5 s	18 - 22
46°C, 50 g, 5 s	Under 45
Ductility at 25°C	Over 2.5 cm
Flash point (C.O.C.) °C	Over 246
Loss in 5 h at 163°C (50g)	Under 0.5%
Loss in penetration after heating	Under 20%
Impact at 4.4°C (cm)	Over 5.08 cm
Pliability at 4.4°C	--
Soluble in carbon tetrachloride, %	--
Stain test, 54°C, 5 days	Under 3-1/2
Viscosity, Stormer 100 g, 100 rev/s at	
191°C	--
204°C	--
218°C	--
232°C	--
Compatibility with coating at 54°C for 72 h	
Roll saturant	Under 1.5 mm
Shingle saturant	Under 3 mm

TABLE 8-3a. ASTM SPECIFICATIONS FOR COATING ASPHALTS (ENGLISH)[3]

Characteristics	ASTM specifications
Specific gravity at 60°F	1.005 - 1.045
Softening point (R and B) °F	215 - 240
Penetration at:	
32°F, 0.44 lb, 60 s	10 up
77°F, 0.22 lb, 5 s	18 - 22
115°F, 0.11 lb, 5 s	Under 45
Ductility at 77°F	Over 1.0 in.
Flash point (C.O.C.) °F	Over 475°F
Loss in 5 h at 325°F (0.11 lb)	Under 0.05%
Loss in penetration after heating	Under 20%
Impact at 40°F (in.)	Over 2 in.
Pliability at 40°F	--
Soluble in carbon tetrachloride, %	--
Stain test, 130°F, 5 days	Under 3-1/2
Viscosity, stormer 0.22 lb., 100 rev/s at:	
375°F	--
400°F	--
425°F	--
450°F	--
Compatibility with saturants at 130°F for 72 h	
Roll saturant	Under 0.059 in.
Shingle saturant	Under 0.118 in.

Coarse minerals or granules are applied to surfaced products to protect the asphalt coating, increase fire resistance, and impart color to the product. The granules typically used for mineral surfacing are natural rock granules, rock granules colored by a ceramic process, or naturally colored slate.

The asphalt roofing industry produces three basic groups of roofing and siding products: (1) saturated felts, (2) roll roofing and roll siding, and (3) roofing and siding shingles. Products which are typical of these three groups are shown and described in Tables 8-4 and 8-4a, and typical compositions of these products are given in Tables 8-5 and 8-5a.

Saturated felts may be impregnated with either saturant asphalt or coal tar. Currently about 95 percent of saturated felts are produced with asphalt and about 5 percent are produced with coal tar. Asphalt saturated felts are used as underlayment for shingles, for sheathing paper, and for laminations in the construction of built-up roofs. These products are made in different weights, the most common being No. 15, which weighs approximately 6.8 kg (15 lb) per square, and No. 30, which weighs about 13.6 kg (30 lb) per square.* Coal tar saturated felts are used for pipe wrapping.

Roll roofing is prepared by adding a stabilized coating of asphalt to a dry felt which has first been impregnated with a saturant asphalt or by adding a stabilized coating asphalt to a fiber glass mat, in which case the stabilized coating is used to both saturate and coat the mat. Roll roofings can be surfaced with mineral granules to produce a wide range of colors. Some styles are furnished in split rolls designed to give an edge pattern when applied to the roof. Mineral-surfaced rolls are also embossed to simulate brick or stone for use as sidings.

Shingles are made by adding a coating of stabilized asphalt to a dry felt web which has first been impregnated with a saturant asphalt, or to a fiber glass mat. Mineral granules are then added, a strip of sealer asphalt may be applied, and the web is cut into shingles. The most popular shingle is a nominal 106.6-kg (235-lb), 3-tab, self-sealing strip shingle. This shingle is shown in Figure 8-2.

---

*A square (sq) is the amount of material which, when applied, will cover 9.29 m^2 (100 ft^2) of surface.

TABLE 8-4. TYPICAL ASPHALT ROOFING PRODUCTS (METRIC)

PRODUCT 1	2	3	4	5	6	7	8
	6.8 13.6	10	1/4 1/2		43.9 21.9	.91	.05
	29.5 22.7	10	1		11	.91	.05
	40.8	10	1.000 1.075 1.150		11	.91	.05 .08 .10
	47.6	11.7 11.9	1		12.8 14.6	.91 .81	.05
	50 TO 54.4	20.1	2		11	.91	.48
	Approx. shipping weight per square, kg.	Area per square, m²	Packages per square	Shingles per square	Length, m	Width, m	Top Lap, m

PRODUCT 1	2	3	4	5	6	7	8
	106.6 136.1	22.3 29.7	3 OR 4	80 80	.91 .91	.30 .30	.18 .18
	88.5	22.7	3	86	.91	1.29	.05
	65.8	23.2	2	80	.41	.41	
	65.8	23.2	2	80	.41	.41	
	150	18.9	4	226	.41	.30	.28
	75	13.1	2	113	.41	.30	.05
	Approx. shipping weight per square, kg.	Area per square, m²	Packages per square	Shingles per square	Length, m	Width, m	Top Lap, m

TABLE 8-4 IS SET UP IN 8 COLUMNS ARRANGED TO SHOW IMPORTANT CHARACTERISTICS OF THE PRODUCT, AS FOLLOWS:[4]

COLUMN 1 - NAME OF PRODUCT

COLUMN 2 - APPROXIMATE SHIPPING WEIGHT OF ONE SQUARE OF PRODUCT. A SQUARE BEING THE AMOUNT OF MATERIAL WHICH, WHEN INSTALLED, WILL COVER 9.29 SQUARE METERS OF SURFACE

COLUMN 3 - APPROXIMATE AREA OF ONE SQUARE

COLUMN 4 - NUMBER OF PACKAGES REQUIRED TO COVER ONE SQUARE

COLUMN 5 - NUMBER OF SHINGLES REQUIRED TO COVER ONE SQUARE

COLUMNS 6&7 - LENGTH AND WIDTH OF ONE PACKAGE OR ONE SHINGLE

COLUMN 8 - AMOUNT OF OVERLAP FROM ONE COURSE TO THE NEXT (SEE FIGURE BELOW)

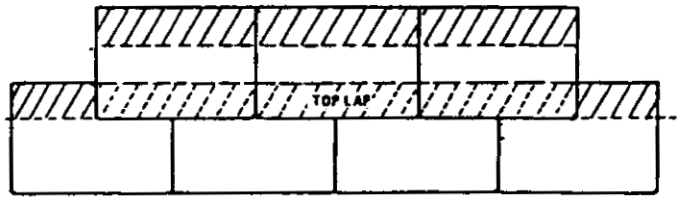

TABLE 8-4a. TYPICAL ASPHALT ROOFING PRODUCTS (ENGLISH)

PRODUCT 1	2	3	4	5	6	7	8
	15 30	108	1/4 1/2		144 72	36	2
	65 50	108	1		36	36	2
	90	108	1.000 1.075 1.150		36	36	2 3 4
	105	126 128	1		42 48	36 32	2
	110 TO 120	216	2		36	36	19
	Approx. shipping weight per square, lb	Area per square, ft^2	Packages per square	Shingles per square	Length, ft.	Width, in.	Top Lap, in.

PRODUCT 1	2	3	4	5	6	7	8
	235 300	240 320	3 OR 4	80 80	36 36	12 12	7 7
	195	244	3	86	36	$11\frac{1}{3}$	2
	145	250	2	80	16	16	
	145	250	2	80	16	16	
	330	203	4	226	16	[illegible]	11
	165	141	2	113	16	12	2
	Approx. shipping weight per square, lb	Approximate area per square, ft^2	Packages per square	Shingles per square	Length, in.	Width, in.	Top Lap, in.

TABLE 8-4a IS SET UP IN 8 COLUMNS ARRANGED TO SHOW IMPORTANT CHARACTERISTICS OF THE PRODUCT, AS FOLLOWS:[4]

COLUMN 1 - NAME OF PRODUCT

COLUMN 2 - APPROXIMATE SHIPPING WEIGHT OF ONE SQUARE OF PRODUCT, A SQUARE BEING THE AMOUNT OF MATERIAL WHICH, WHEN INSTALLED, WILL COVER 100 SQUARE FEET OF SURFACE

COLUMN 3 - APPROXIMATE AREA OF ONE SQUARE

COLUMN 4 - NUMBER OF PACKAGES REQUIRED TO COVER ONE SQUARE

COLUMN 5 - NUMBER OF SHINGLES REQUIRED TO COVER ONE SQUARE

COLUMNS 6&7 - LENGTH AND WIDTH OF ONE PACKAGE OR ONE SHINGLE

COLUMN 8 - AMOUNT OF OVERLAP FROM ONE COURSE TO THE NEXT (SEE FIGURE BELOW)

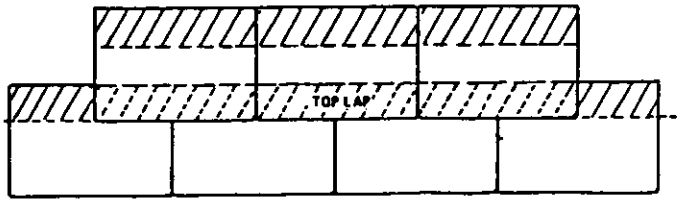

TABLE 8-5. TYPICAL ROOFING COMPOSITIONS[5,6] (METRIC)

Parameters	Saturated felts 6.8 kg	Saturated felts 13.6 kg	Smooth roll roofing	Granule-surfaced roll roofing	Standard shingle
Weight--kg/100 m^2	65.9	131.8	236.3	439.4	488.5
Felt base--% by wt.	40	38	14.0	12.5	11.6
Saturant for felt--% by wt.	60	62	19.6	19.9	19.8
Coating (stabilized)--% by wt.	--	--	59.8	23.9	34.4
Surfacing--% by wt.	--	--	6.6	43.7	34.2
Character of felt:	Organic		Organic	Organic	
Weight--kg/100 m^2	26.5	50.9	30.5	50.9	55.9
Thickness--mm	0.864	1.397	0.864	1.397	1.524
Composition:					
Rag fiber--%	0	0	0	0	0
Chemical wood pulp--%	45	45	45	45	45
Mechnical wood pulp--%	55	55	55	55	55
Character of saturant	Blown asphalt		Blown asphalt	Blown asphalt	
Softening point (R and B)--°C	43.3		43.3	43.3	54.4
Penetration at 25°C	150		150	150	70
Character of coating	--	--	Filled blown asphalt	Filled blown asphalt	
Stabilizer (limestone)--% by wt.			50	50	53
Softening point (R and B), unfilled--°C			104	104	104
Softening point (R and B), filled--°C			110	110	110
Penetration, unfilled at 25°C			18	18	18
Character of surfacing			Ground talc	Crushed rock	
Cumulative retained					
10-mesh sieve--%			--	1	1
14-mesh sieve--%			--	35	35
35-mesh sieve--%			--	98	98
100-mesh sieve--%			40	--	--
200-mesh sieve--%			60	--	--

TABLE 8-5a. TYPICAL ROOFING COMPOSITIONS[5,6] (ENGLISH)

Parameters	Saturated felts 15 lb	Saturated felts 30 lb	Smooth roll roofing	Granule-surfaced roll roofing	Standard shingle
Weight--lb/100 ft^2	13.5	27.0	48.4	90	98
Felt base--% by wt.	40	38	14.0	12.5	11.6
Saturant for felt--% by wt.	60	62	19.6	19.9	19.8
Coating (stabilized)--% by wt.	--	--	59.8	23.9	34.4
Surfacing--% by wt.	--	--	6.6	43.7	34.2
Character of felt:	Organic		Organic	Organic	
Weight--lb/480 ft^2	26	50	30	50	55
Thickness--in.	0.034	.055	.034	.055	.060
Composition:					
Rag fiber--%	0	0	0	0	0
Chemical wood pulp--%	45	45	45	45	45
Mechnical wood pulp--%	55	55	55	55	55
Character of saturant:	Blown asphalt		Blown asphalt	Blown asphalt	
Softening point (R and B)--°F	110		110	110	130
Penetration at 77°F	150		150	150	70
Character of coating	--	--	Filled blown asphalt	Filled blown asphalt	
Stabilizer (limestone)--% by wt.			50	50	53
Softening point (R and B), unfilled--°F			220	220	220
Softening point (R and B), filled--°F			230	230	230
Penetration, unfilled at 77°F			18	18	18
Character of surfacing			Ground talc	Crushed rock	
Cumulative retained					
10-mesh sieve--%			--	1	1
14-mesh sieve--%			--	35	35
35-mesh sieve--%			--	98	98
100-mesh sieve--%			40	--	--
200-mesh sieve--%			60	--	--

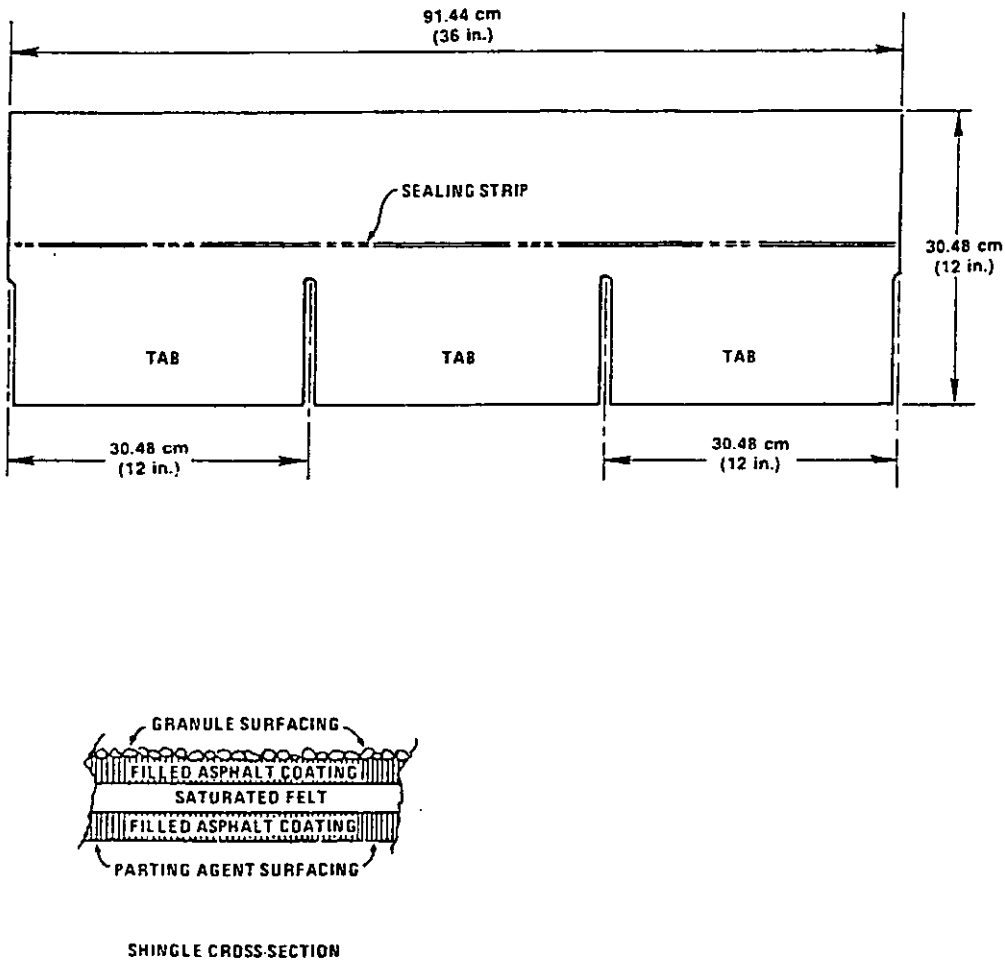

Figure 8-2. 106.6-kg (235-lb), 3-tab self-seal strip shingle.[7]

In addition to the basic products given above, a variety of specialty asphalt coatings and cements are made from asphalt by adding special ingredients, by mixing with suitable solvents, or by emulsifying with water.

Asphalt coatings and cements can be categorized as:[8]

1. plastic asphalt cements;
2. lap cements;
3. quick-setting asphalt adhesives;
4. roof coatings;
5. asphalt water emulsions; and
6. asphalt primers.

Few roofing plants make these specialty products and details of their preparation were not investigated in this study.

8.1.1.2 Production Plants. The individual asphalt roofing manufacturing plants are described with the information available with respect to the following characteristics: (1) location and ownership, (2) plant age, and (3) plant production capacity.

8.1.1.2.1 Plant location and ownership. The Asphalt Roofing Manufacturers Association (ARMA) provided the name and location of 117 asphalt roofing manufacturing plants in the United States. They reported that 109 were members of the association in 1978. The name and location of the asphalt roofing plant not a member of ARMA was obtained from a manufacturer of electrostatic precipitators. The information was verified by calling the plant owner. These plants were owned by 31 companies and were scattered throughout the country. Table 8-6 lists the locations and company ownership of the 118 asphalt roofing plants in the United States. Figure 8-3 shows the plant locations.

About 30 percent of the plants are located in three states (California, Texas, and Illinois), and most of the plants are located in urban areas. The companies which own the plants vary greatly in size and diversity of products. Some of the companies produce their own felts, about one-third of the companies process their own asphalt, and one company owns its own asphalt refinery. Ten of the firms are publicly owned and listed on the New York, American, or regional stock exchanges.

TABLE 8-6. ASPHALT ROOFING MANUFACTURERS[9]

Company and headquarters location	No. of plants	Plant locations
Allied Materials Corporation Stroud, Oklahoma	1	Stroud, OK
Asphalt Products Industries[a] Auburn, Washington	1	Auburn, WA
Bear Brand Roofing, Inc. Bearden, Arkansas	1	Bearden, AR
Big Chief Roofing Company Ardmore, Oklahoma	1	Ardmore, OK
Bird and Sons, Inc. East Walpole, Massachusetts	9	Charleston, SC; Chicago, IL; Franklin, OH; Martinez, CA; Norwood, MA; Perth Amboy, NJ; Portland, OR; Shreveport, LA; Wilmington, CA
The Celotex Corporation Tampa, Florida	13	San Antonio, TX; Camden, AR; Houston, TX; Cincinnati, OH; Memphis, TN; Perth Amboy, NJ; Goldsboro, NC; Chester, WV; Chicago, IL; Wilmington, IL; Philadelphia, PA; Birmingham, AL; Los Angeles, CA
CertainTeed Corporation Valley Forge, Pennsylvania	10	Avery, OH; Chicago Hgts., IL; Kansas City, MO; Dallas, TX; Oxford, NC; Richmond, CA; Shakopee, NM; Savannah, GA; Tacoma, WA; York, PA
Congoleum-Nair, Inc. Cedarhusrt, Maryland	1	Cedarhurst, MD
Consolidated Fiberglass Bakersfield, California	1	Bakersfield, CA
Daingerfield Manufacturing Company Daingerfield, Texas	1	Daingerfield, TX
Delta Roofing Mills Slidell, Louisiana	1	Slidell, LA

TABLE 8-6. ASPHALT ROOFING MANUFACTURERS[9]
(continued)

Company and headquarters location	No. of plants	Plant locations
Elk Corporation Stephens, Arkansas	2	Stephens, AR; Tuscaloosa, AL
The Flintkote Company Stamford, Connecticut	7	Peachtree City, GA; Jersey City, NJ; Ennis, TX; Chicago Hgts., IL; Los Angeles, CA; St. Paul, NM; Portland, OR
G A F Corporation New York, New York	13	Baltimore, MD; Dallas, TX; Denver, CO; Erie, PA; Joliet, IL; Kansas City, MO; Millis, MA; Minneapolis, MN; Mobile, AL; Mount Vernon, IL; Savannah, GA; Tampa, FL; South Bound Brook, NJ
Gate Roofing Company Green Cove Springs, Florida	1	Green Cove Springs, Fl
Georgia Pacific Portland, Oregon	3	Hampton, GA; Franklin, OH; Quakertown, PA
Globe Industries, Inc. Chicago, Illinois	1	Whiting, IN
Johns-Manville Corporation Denver, Colorado	7	Fort Worth, TX; Marrero, LA; Manville, NJ; Savannah, GA; Pittsburg, CA; Waukegan, IL; Los Angeles, CA
Koppers Company Pittsburgh, Pennsylvania	3	Chicago, IL; Woodward, AL; Youngstown, OH
Lunday-Thagard Oil Company South Gate, California	1	South Gate, CA
Herbert Malarkey Roofing Company Portland, Oregon	1	Portland, OR
Masonite Corporation Meridian, Mississippi	2	Meridian, MS; Little Rock, AR

TABLE 8-6. ASPHALT ROOFING MANUFACTURERS[9]
(concluded)

Company and Headquarters lodation	No. of plants	Plant locations
Nical, Inc. Hollister, California	2	Albuquerque, NM; Hollister, CA
Owens-Corning Fiberglas Corporation, Toledo, Ohio	26	Atlanta, GA; Brookville, IN; Compton, CA; Denver, CO; Detroit, MI; Hazelwood, MO; Houston, TX; Irving, TX; Kansas City, KS; Medina, OH; Kearney, NJ; Lubbock, TX; Memphis, TN; Ft. Lauderdale, FL; Jacksonville, FL; Minneapolis, MN; Morehead City, NC; North Kansas City, MO; Oklahoma City, OK; Portland, OR; San Leandro, CA; Santa Clara, CA; Summit, IL; Waltham, MA; Woods Cross, UT; Jessup, MD
Prairie States Roofing Joliet, Illinois	1	Joliet, IL
Richards Oil Company Savage, Minnesota	1	Savage, MN
Tamko Asphalt Products, Inc. Joplin, Missouri	3	Joplin, MO; Phillipsburg, KS; Tuscaloosa, AL
TARCO North Little Rock, Arkansas	1	North Little Rock, AK
Tilo Company, Inc. Stratford, Connecticut	1	Stratford, CT
United States Gypsum Company Chicago, Illinois	1	South Gate, CA
Warrior Roofing Tuscalosa, Alabama	1	Tuscalosa, AL

[a]Company name not furnished by the Association; company name and location obtained from a manufacturer of electrostatic precipitators. Verified by calling plant owner.

Figure 8-3. Location of asphalt roofing manufacturing facilities within the United States.[9]

8.1.1.2.2 Plant age. No data are available on the age of individual plants in the asphalt roofing and siding products industry. Data published by the Department of Commerce, Bureau of the Census, provide some insight into the approximate ages of plants in the industry. The Census of Manufacturers reports in 1954, 1958, 1963, 1967, and 1972 showed that the asphalt and tar roofing and siding products industry was composed of the following number of plants:[10]

Year	No. of plants
1954	116
1958	109
1963	113
1967	100
1972	102
1977	110

These data show that the number of plants in the industry declined between 1954 and 1967. The number of plants increased from 100 in 1967 to 110 in 1977. During the 24-year period 1954 through 1977 the least number of plants in operation in the census years was 100.

Since there are no data for years between the censuses and no information on the number of new plants built or plant closures, the age of the 110 plants in operation in 1977 can only be estimated. If we assume that during periods of decline (1954 through 1958 and 1963 through 1967) no new plants were built, and assume that during periods of increase (1958 through 1963 and 1967 through 1977) about 2 percent of the existing plants were closed and were replaced by new plants, and attribute the actual increase in the number of plants to new plant construction, then the 110 plants existing in 1977 would have the following estimated ages:

Age	No. of plants
Over 20 years	90
10 to 20 years	5
Under 10 years	15

8.1.1.2.3 Plant production capacities. Asphalt roofing production capacity figures are not disclosed for the industry or for individual plants. Table 8-7 shows the shipments, by region, for individual products in 1977 and the number of plants in each region. The table can also be used to show the relative capacities of plants in each region for production of specific products. It is important to note that the data in Table 8-7 are aggregate data, and no information can be deduced from

TABLE 8-7. QUANTITIES OF ASPHALT ROOFING PRODUCT SHIPMENTS IN 1977, BY REGION[9,11]

Region[a]	No. of plants	Quantity of shipments (thousands of sales squares)				
		Roll roofing and cap sheet				
		Smooth-surfaced	Mineral-surfaced	Strip shingles	Individual shingles	Total
Northeast	13	3,426	2,430	10,905	92	16,853
North Central	29	5,256	3,786	20,379	1,102	30,523
East North Central	18	4,412	2,616	14,040	513	21,581
West North Central	11	844	1,170	6,339	589	8,942
South	44	4,943	3,911	23,108	292	32,254
South Atlantic	16	1,705	1,506	6,354	133	9,698
East South Central	9	1,115	559	4,354	30	6,058
West South Central	19	2,123	1,846	12,400	129	16,498
West	24	3,764	3,062	7,048	737	14,611
Total United States	110	17,389	13,189	61,440	2,223	94,241

[a]Northeast: Massachusetts, Connecticut, New Jersey, and Pennsylvania.
North Central: Ohio, Indiana, Illinois, Michigan, Minnesota, Missouri, and Kansas.
South: Maryland, West Virginia, North Carolina, South Carolina, Georgia, Florida Tennessee, Alabama, Mississippi, Arkansas, Oklahoma, Louisiana, and Texas.
West: Colorado, Utah, Washington, California, Oregon, and New Mexico.

these data for individual plants. For example, a region may have two large plants which tend to distort the data to indicate that plants in that region are larger than plants in another region, while the opposite may be the actual case.

The data in Table 8-7 indicate that 12 percent of the plants are in the Northeast; 26 percent in the North Central region; 40 percent in the South; and 22 percent in the West. The Northeast produced 18 percent of the asphalt roofing products in 1977; the North Central region produced 32 percent; the South produced 34 percent; and the West produced 16 percent. The South and North Central regions have larger production capacities than do the other two regions, and the ratio of production quantities to the number of plants is highest for the Northeast region and lowest for the West.

Half of the production of individual shingles occurs in the North Central region and another 33 percent occurs in the West. Strip shingles are produced primarily (70.7 percent) in the North Central and South regions. Smooth-surfaced and mineral-surfaced roll roofing and cap sheet comprise from 18 to 30 percent of the U.S. total production in each region.

8.1.1.3 Asphalt and Asphalt Product Production. The production of asphalt roofing products depends upon the manufacture of asphalt flux at petroleum refineries and the processing of the flux into saturant and coating asphalt by the petroleum refineries, asphalt processors, or asphalt roofing manufacturing plants. Since the asphalt roofing industry is dependent on the petroleum refining industry for this primary raw material, a brief discussion of the asphalt production industry is included in this section. Following the discussion on asphalt production, the production of products in the asphalt roofing industry is presented.

8.1.1.3.1 Asphalt production. The production of asphalt in the United States increased from 21,573,000 m^3 (135,691,000 barrels) in 1969 to 26,691,000 m^3 (167,884,000 barrels) in 1973; then declined to 22,211,000 m^3 (139,706,000 barrels) by 1976; and rose to 24,493,000 m^3 (154,058,000 barrels) in 1977 as shown in Tables 8-8 and 8-8a. These increases and decreases in asphalt production were in direct response to the U.S. consumption of asphalt each year, since exports were negligible

TABLE 8-8. ANNUAL U.S. PRODUCTION, CONSUMPTION, IMPORTS, EXPORTS, AND STOCK OF ASPHALT, 1969-1977[16,17]
(Thousands of m^3 of asphalt)

Year	U.S. production	Imports	U.S. consumption	Exports	End-of-year stock
1977	24,493	238	24,808	35	2,968
1976	22,211	621	23,333	42	3,080
1975	22,887	788	23,432	51	3,624
1974	26,112	1,789	26,826	65	3,398
1973	26,691	1,342	29,031	54	2,389
1972	24,690	1,473	26,040	53	3,440
1971	24,967	1,147	25,204	49	3,371
1970	23,317	986	24,401	57	2,509
1969	21,573	757	22,781	74	2,664

TABLE 8-8a. ANNUAL U.S. PRODUCTION, CONSUMPTION, IMPORTS, EXPORTS, AND STOCK OF ASPHALT, 1969-1977[16,17]
(Thousands of barrels of asphalt)

Year	U.S. production	Imports	U.S. consumption	Exports	End-of-year stock
1977	154,058	1,498	156,039	223	18,669
1976	139,706	3,905	146,763	267	19,375
1975	143,957	4,956	147,384	320	22,794
1974	164,237	11,252	168,733	410	21,370
1973	167,884	8,444	182,602	340	15,024
1972	155,294	9,263	163,788	333	21,638
1971	157,039	7,216	158,526	306	21,202
1970	146,658	6,201	153,477	356	15,779
1969	135,691	4,761	143,290	464	16,753

and imports varied to meet short-term demand which domestic production failed to provide.

Most asphalt is produced at petroleum refineries as a residual product of the refining processes. The refineries can adjust the process to obtain larger or smaller quantities of asphalt as needed. The residual product is used in coking operations, in the production of residual fuel oils and as refinery fuel, as well as for the manufacture of asphalt.

The demand for asphalt depends predominantly on the paving market and on the asphalt roofing industry to a lesser extent. In recent years, 80 percent of asphalt was used to pave roads, 15 percent was used in asphalt roofing, and 5 percent was used for miscellaneous purposes. Asphalt consumption increased by about 780,000 Mg/yr (860,000 tons/yr) in the 1960's; 698,000 Mg/yr (770,000 tons/yr) for paving; and 62,000 Mg/yr (68,000 tons/yr) for asphalt roofing.[14]

During the early 1970's, asphalt consumption continued to increase, reaching the highest level in 1973. The price of crude oil and asphalt rose dramatically in 1974 due to the oil embargo of the Organization of Petroleum Exporting Countries (OPEC) and the demand for asphalt fell for that year, for 1975, and for 1976. The fall in consumption can be explained by the facts that consumer funds for home construction and government funds for road construction remained almost constant while the price of asphalt rose dramatically.

The capacity to produce asphalt was available at 104 of the nation's 285 refineries as of January 1, 1978, and the reported capacity for the industry was 122,890 m^3 per stream day (772,957 barrels per stream day), as shown in Table 8-9. These 104 refineries are owned by 58 companies; the 20 largest firms in terms of asphalt production capacity are shown in Table 8-10. The largest, the Exxon Corporation, controls 13.2 percent of the asphalt production capacity in the U.S.; the five largest companies control 48.6 percent of the asphalt capacity; and the 20 largest control 80.5 percent of the production capacity.[15]

8.1.1.3.2 Asphalt Product Production. Shipments of all asphalt and tar roofing and siding products totaled 8.6 million Mg (9.5 million tons) in 1977, the most recent year for which data are available. The total

TABLE 8-9. U.S. DISTRIBUTION OF ASPHALT PRODUCTION CAPACITY, BY STATE[a] [15]

State	No. of refineries	Refineries producing asphalt	Asphalt production capacity		
			m^3 per stream day	Barrels per stream day	Percent of crude capacity
Alabama	6	3	2,067	13,000	11.2
Alaska	4	1	48	300	0.3
Arizona	1	1	238	1,500	23.7
Arkansas	4	3	1,351	8,500	13.2
California	40	13	12,218	76,850	3.1
Colorado	3	1	525	3,300	4.8
Delaware	1	0	0	0	0.0
Florida	1	0	0	0	0.0
Georgia	2	2	2,067	13,000	59.1
Hawaii	2	1	207	1,300	1.2
Illinois	12	5	8,236	51,800	4.2
Indiana	7	4	9,285	58,400	9.5
Kansas	11	5	2,830	17,800	3.8
Kentucky	4	2	3,736	23,500	13.6
Louisiana	23	5	9,523	59,900	2.8
Maryland	2	2	3,450	21,700	69.5
Michigan	6	1	1,375	8,650	5.7
Minnesota	3	2	7,790	49,000	21.8
Mississippi	5	3	1,517	9,540	2.8
Missouri	1	1	1,033	6,500	6.1
Montana	7	4	3,863	24,300	14.7
Nebraska	1	0	0	0	0.0
Nevada	1	0	0	0	0.0
New Hampshire	1	0	0	0	0.0
New Jersey	4	2	12,401	78,000	11.5
New Mexico	8	1	111	700	0.6
New York	2	2	2,862	18,000	16.4
North Carolina	1	0	0	0	0.0
North Dakota	3	0	0	0	0.0

TABLE 8-9. U.S. DISTRIBUTION OF ASPHALT PRODUCTION CAPACITY, BY STATE[a] [15]
(concluded)

State	No. of refineries	Refineries producing asphalt	Asphalt production capacity		
			m^3 per stream day	Barrels per stream day	Percent of crude capacity
Ohio	7	6	5,406	34,000	5.5
Oklahoma	12	8	5,247	33,000	5.8
Oregon	1	1	1,367	8,600	58.4
Pennsylvania	10	3	6,677	42,000	5.0
Tennessee	1	1	1,272	8,000	17.9
Texas	53	11	10,223	64,300	1.3
Utah	9	1	350	2,200	1.3
Virginia	1	0	0	0	0.0
Washington	8	2	1,113	7,000	1.8
West Virginia	3	0	0	0	0.0
Wisconsin	1	1	2,146	13,500	28.8
Wyoming	13	6	2,356	14,817	7.5
Total	285	104	122,890	772,957	avg. 4.4

[a]Data for January 1, 1978.

TABLE 8-10. U.S. ASPHALT PRODUCTION CAPACITY, BY COMPANY[a] [15]

	Company	m^3 per stream day	Barrels per stream day	% of total U.S. capacity
1.	Exxon Company	16,200	101,900	13.2
2.	Amoco Oil Company	12,460	78,400	10.1
3.	Chevron USA, Inc.	11,270	70,900	9.2
4.	Ashland Petroleum Company	10,800	67,900	8.8
5.	Shell Oil Company	8,970	56,400	7.3
6.	Koch Refining Company	5,560	35,000	4.5
7.	Marathon Oil Company	4,560	28,700	3.7
8.	Atlantic Richfield Company	3,970	25,000	3.2
9.	Douglas Oil Company	3,470	21,800	2.8
10.	Sun Oil Company	3,240	20,400	2.6
11.	Mobil Oil Corporation	2,460	15,500	2.0
12.	Vickers Petroleum Corporation	2,380	15,000	1.9
13.	Murphy Oil Corporation	2,150	13,500	1.7
14.	Texaco, Inc.	2,100	13,200	1.7
15.	Continental Oil Company	1,720	10,800	1.4
16.	Union Oil Company (CA)	1,690	10,600	1.4
17.	Energy Cooperative, Inc.	1,650	10,400	1.3
18.	Hunt Oil Company	1,590	10,000	1.3
19.	Southland Oil Company	1,510	9,500	1.2
20.	Gulf Oil Company	1,410	8,900	1.2
	Total	99,180	623,800	80.5

[a]Data for January 1, 1978.

shipment was 90.3 percent asphalt roofing products, 9.6 percent saturated felts, and 0.1 percent asphalt and insulated siding products. Total production in 1977 represented an increase of 1.8 percent of the total production in 1976.[11]

Tables 8-11 through 8-13 and Figure 8-4 show the production data for the asphalt and tar roofing and siding industry for the years 1963 through 1977. Tables 8-11 through 8-11a give the annual production of asphalt and tar roofing and siding products for 1969 to 1977 in megagrams and tons, respectively. Table 8-12 shows the quantities of asphalt roofing shipments in sales squares, by region, for 1970 through 1977. Table 8-13 shows the annual production of asphalt and tar roofing and siding products as a percent of total annual production of asphalt products for 1970 to 1977. Figure 8-4 shows the total shipments in teragrams for the asphalt roofing industry for 1963 through 1977.

Production of asphalt and tar roofing and siding products increased 27 percent from 1970 to 1973, then declined in 1974 and 1975, and recovered in 1976 and 1977 to the 1972 level of production and to within 4 percent of the peak 1973 production level. In 1970 the Northeast region accounted for 19 percent of total U.S. production; the North Central region, 31 percent; the South region, 36 percent; and the West region, 14 percent. In 1977 the percentage of U.S. production in the Northeast region had decreased to 18 percent; the North Central region had increased to 32 percent; the South region had decreased to 34 percent; and the West region had increased to 16 percent.

The period 1971 to 1977 showed some marked changes in the product mix of the industry as shown in Table 8-13. The most significant change was the shift from standard (or regular) shingles to self-sealing shingles. The share of the total industry market for self-sealing shingles increased from 51.7 to 74.9 percent while the market share for regular shingles decreased from 20.2 to only 2.5 percent. Individual shingles, smooth-surfaced and mineral-surfaced roll roofing and cap sheet, asphalt and insulated sidings, and saturated felts all declined in their shares of the market.

8.1.1.4 Industry Employment. Table 8-14 shows the data on employment in the asphalt felts and coating industry, which includes the asphalt and

TABLE 8-11. ANNUAL PRODUCTION OF ASPHALT AND TAR ROOFING AND SIDING PRODUCTS (IN MEGAGRAMS)[11]

Product	1969	1970	1971	1972	1973	1974	1975	1976	1977
Asphalt roofing									
Smooth-surface roll roofing and cap sheet[a]	547,905	584,738	552,883	492,045	480,509	465,278	389,914	389,515	384,840
Mineral-surfaced roll roofing and cap sheet[b]	542,513	533,370	539,107	526,787	539,030	529,380	538,486	528,554	525,482
Strip shingles, self-sealing and standard	4,962,532	4,841,278	5,811,507	6,413,644	6,736,404	6,184,024	6,109,036	6,498,962	6,641,961
Individual shingles	329,039	279,254	309,557	283,385	298,997	253,136	225,013	221,085	197,493
Subtotal	6,381,989	6,238,640	7,213,054	7,715,861	8,054,940	7,431,818	7,262,449	7,638,116	7,749,776
Asphalt and insulated siding, all types and finishes	50,837	41,502	40,957	27,860	40,683	27,819	18,978	15,276	9,733
Saturated felts									
Asphalt	789,143	728,716	789,311	793,612	823,464	828,337	645,607	746,923	789,946
Tar	45,105	40,742	41,189	32,794	40,045	27,391	26,827	31,575	36,679
Subtotal	834,248	769,458	830,500	826,406	863,509	855,728	672,434	778,498	826,625
Asphalt roofing and siding products total	7,267,074	7,049,600	8,084,512	8,570,127	8,959,131	8,315,365	7,953,860	8,431,890	8,586,134

[a] Includes sand, talc, mica, and other fine material surfacing.
[b] Includes 17-inch and 19-inch selvage-edged roofing.

TABLE 8-11a. ANNUAL PRODUCTION OF ASPHALT AND TAR ROOFING AND SIDING PRODUCTS (IN TONS)[11]

Product	1969	1970	1971	1972	1973	1974	1975	1976	1977
Asphalt roofing									
Smooth-surface roll roofing and cap sheet[a]	604,018	644,624	609,506	542,437	529,720	512,929	429,847	429,407	424,253
Mineral-surfaced roll roofing and cap sheet[b]	598,074	587,995	594,319	580,738	594,234	583,596	593,635	582,686	579,299
Strip shingles, self-sealing and standard	5,470,766	5,337,094	6,406,689	7,070,493	7,426,308	6,817,356	6,734,689	7,164,548	7,322,193
Individual shingles	362,737	307,854	341,260	312,408	329,619	279,061	248,057	243,727	217,719
Subtotal	7,035,595	6,877,567	7,951,774	8,506,076	8,879,881	8,192,942	8,006,228	8,420,368	8,543,464
Asphalt and insulated siding, all types and finishes	56,043	45,753	45,151	30,713	44,850	30,668	20,922	16,841	10,730
Saturated felts									
Asphalt	869,963	803,347	870,148	874,889	907,798	913,170	711,726	823,419	870,848
Tar	49,724	44,915	45,408	36,153	44,146	30,196	29,574	34,809	40,435
Subtotal	919,687	848,262	915,556	911,042	951,944	943,366	741,300	858,228	911,283
Asphalt roofing and siding products total	8,011,325	7,711,582	8,912,481	9,447,831	9,876,675	9,166,976	8,768,450	9,295,437	9,465,477

[a]Includes sand, talc, mica, and other fine material surfacing.
[b]Includes 17-inch and 19-inch selvage-edged roofing.

TABLE 8-12. QUANTITIES OF ASPHALT ROOFING PRODUCT SHIPMENTS BY REGION, 1970-1977[11]

Region[a]	Products	Quantities of shipments (thousands of sales squares)							
		1970	1971	1972	1973	1974	1975	1976	1977
Northeast	Roll roofing and cap sheet	7,415	7,728	7,423	7,012	7,136	6,202	5,405	5,855
	Strip shingles	8,351	10,049	10,792	11,277	10,899	10,768	10,710	10,905
	Individual shingles	396	391	209	274	166	176	143	92
	Subtotal	16,162	18,168	18,424	18,563	18,201	17,146	16,258	16,852
North Central	Roll roofing and cap sheet	10,414	10,004	9,918	10,773	10,065	9,260	9,731	9,042
	Strip shingles	14,364	17,197	18,197	20,435	19,958	18,950	20,556	20,378
	Individual shingles	1,155	1,362	1,423	1,592	1,456	1,272	1,336	1,102
	Subtotal	25,933	28,563	29,538	32,800	31,479	29,482	31,624	30,522
South	Roll roofing and cap sheet	11,384	11,644	11,835	11,694	11,318	9,355	9,024	8,854
	Strip shingles	17,642	21,849	24,497	25,531	22,226	21,740	22,630	23,108
	Individual shingles	734	935	706	692	544	411	386	292
	Subtotal	29,760	34,438	37,038	37,917	34,088	31,506	32,040	32,254
West	Roll roofing and cap sheet	5,544	5,931	6,291	7,232	7,356	6,512	7,327	6,827
	Strip shingles	5,132	5,484	5,810	6,226	5,844	5,659	6,804	7,048
	Individual shingles	649	662	597	683	623	557	443	737
	Subtotal	11,325	12,077	12,698	14,141	13,823	12,728	14,574	14,612
United States total		83,180	93,246	97,698	103,421	97,591	90,862	94,496	94,240
United States total (revised)		83,180	93,246	97,163	102,861	94,852	90,828	93,759	94,240

[a]Northeast: Massachusetts, Connecticut, New York, New Hampshire, New Jersey, and Pennsylvania.
North Central: Ohio, Indiana, Illinois, Michigan, Minnesota, Missouri, and Kansas.
South: Delaware, Maryland, West Virginia, North Carolina, South Carolina, Georgia, Florida, Tennessee, Alabama, Mississippi, Arkansas, Oklahoma, Louisiana, and Texas.
West: Colorado, Utah, Washington, California, and Oregon.

TABLE 8-13. ANNUAL PRODUCTION OF ASPHALT AND TAR ROOFING AND SIDING PRODUCTS AS A PERCENT OF TOTAL ANNUAL PRODUCTION, 1970-1977[11]

Product	Percent of total production, by weight						
	1971	1972	1973	1974	1975	1976	1977
Smooth-surfaced roll roofing and cap sheet	6.8	5.7	5.4	5.6	4.9	4.6	4.5
Mineral-surfaced roll roofing and cap sheet	6.7	6.2	6.0	6.4	6.8	6.3	6.1
Self-sealing strip shingles	51.7	65.7	69.7	71.9	74.6	74.1	74.9
Standard or regular strip shingles	20.2	9.1	5.5	2.5	2.2	3.0	2.5
Individual shingles	3.8	3.3	3.3	3.0	2.8	2.6	2.3
Asphalt roofing total	89.2	90.0	89.9	89.4	91.3	90.6	90.3
Asphalt and insulated sidings total	0.5	0.3	0.5	0.3	0.2	0.2	0.1
Saturated felts							
Asphalt	9.8	9.3	9.1	10.0	8.1	8.9	9.2
Tar	0.5	0.4	0.5	0.3	0.4	0.3	0.4
Total	100.0	100.0	100.0	100.0	100.0	100.0	100.0

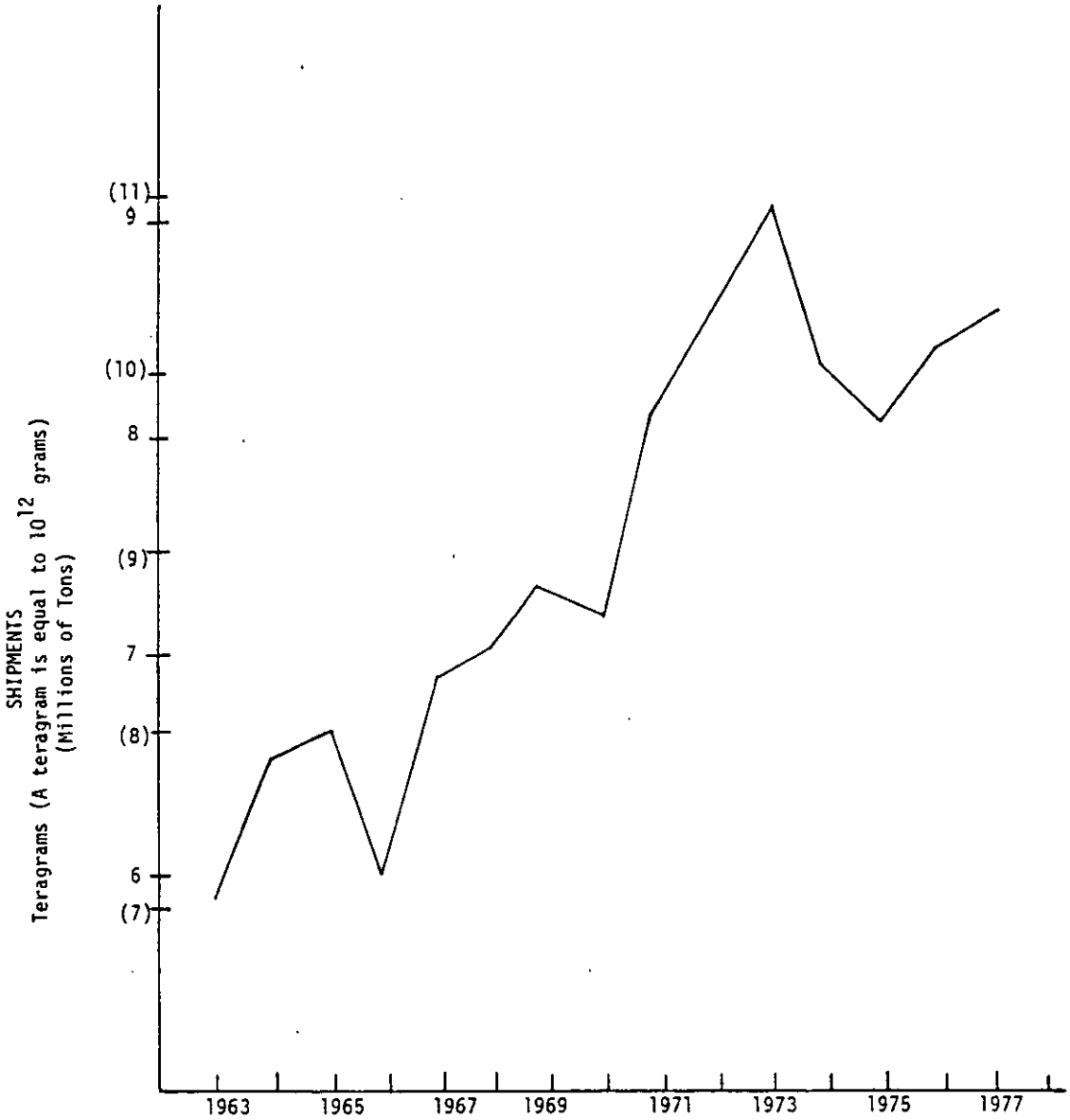

Figure 8-4. Shipping Trends in Roofing Manufacturing.[16]

TABLE 8-14. ESTIMATED ANNUAL EMPLOYMENT IN THE ASPHALT ROOFING AND SIDING PRODUCTS INDUSTRY, 1969-1976

Year	Asphalt felts and coating industry		Asphalt roofing and siding products industry	
	No. of all employees	No. of production workers	No. of all employees	No. of production workers
1969	13,800	9,900	10,900	8,600
1970	14,200	10,200	11,200	8,800
1971	14,400	10,400	11,400	9,000
1972	15,600	11,500	12,300[a]	9,700[a]
1973	16,700	12,600	13,200	10,400
1974	17,300	12,800	13,700	10,800
1975	16,600	12,200	13,100	10,400
1976	18,900	13,700	14,900	11,800

[a]These data from the 1972 Census of Manufacturers show that 79 percent of all employees in the asphalt felts and coating industry work in the asphalt roofing and siding products industry and that 79 percent of the employees in the latter industry are production workers. The data for the other years were developed from these ratios.

tar roofing and siding products industry. The asphalt felts and coating industry is engaged in manufacturing roofing coatings and cements, in addition to asphalt roofing and siding products.

Estimated data on employment in the asphalt roofing and siding products industry are also included in Table 8-14. The data were calculated by assuming that 79 percent of the employees in the asphalt felts and coating industry were employed in the asphalt roofing and siding industry. This percentage is based on historical data from the Census of Manufacturers (1954, 1958, 1963, 1967, and 1972).[10]

Table 8-14 shows that employment in the asphalt roofing industry increased from 10,900 employees in 1969 to 14,900 employees in 1976, and the number of production workers increased from 8,600 in 1969 to 11,800 in 1976. Between 1969 and 1976 the industry employment increased by 37 percent.

8.1.1.5 Product Markets. The discussion of asphalt roofing product markets which follows is divided into the following topics: (1) market location, (2) product substitution, and (3) imports and exports.

8.1.1.5.1 Market locations. Most asphalt roofing products are sold within 483 km (300 mi) of the production facility, so the location of the markets would approximate the location of the production plants shown in Figure 8-3. The market locations for specific products would approximate the regional shipments of products shown in Table 8-7. This table shows that half of the individual shingles are sold in the North Central region, and one-third are sold in the West; that 70 percent of strip shingles are sold in the North Central region and the South; that 30 percent of smooth-surfaced roll roofing and cap sheet is sold in the North Central region, 29 percent in the South, 21 percent in the West, and 20 percent in the Northeast; and that 30 percent of mineral-surfaced roll roofing and cap sheet is sold in the South, 29 percent in the North Central region, 23 percent in the West, and 18 percent in the Northeast.[9,11]

8.1.1.5.2 Product substitution. At present, asphalt roofing products provide over 80 percent of the roofing products purchased in the United States.[17] Cedar shingles, slate, and tile have found limited application in the roofing markets in recent years. The physical properties of

asphalt roofing products make them durable and economical in the long run. Recent price increases in asphalt roofing products have caused some acceleration in the searches for substitutes by consumers and producers of roofing products. In the commercial and industrial built-up roofing market, there is some competition from various plastic materials which are lighter and have shorter application times, but these products have made no significant inroads into the residential market.

8.1.1.5.3 Imports and exports. The U.S. Department of Commerce U.S. General Imports and U.S. General Exports publications for 1973 and 1977 do not report any imports or exports of asphalt roofing products or roofing products of any type.[18,19] We assume, therefore, that the U.S. domestic market for asphalt roofing products is supplied entirely by domestic manufacturers and that domestic manufacturers do not export asphalt roofing products.

8.1.1.6 Product prices. The producer prices of asphalt roofing products tripled between 1969 and 1978. This is reflected in Table 8-15 which shows that the producer price index (1967=100) for asphalt roofing products rose from 102.8 in 1969 to 305.2 in December 1978 and shows that the producer price of asphalt roofing strip shingle rose from $6.44/sq in 1969 to $16.69/sq in January 1978. More recent data on producers' prices of standard asphalt shingle to a large southeastern building supply company show that the price of this product rose from $12.67/sq in 1974 to $17.01/sq in February 1979, an increase of 34 percent over the 5-year period as shown in Table 8-16.

Manufacturers' shipments of asphalt roofing products, as shown in Table 8-17, rose from 84,430,000 sq to 93,759,000 sq, or 11 percent, and saturated felt shipments fell from 834,532 Mg (920,000 tons) to 778,292 Mg (858,000 tons), or 6.7 percent, from 1969 to 1976. At the same time, the value of asphalt roofing product shipments rose from $406,800,000 to $1,327,900,000, or 226 percent.

These dramatic price increases are attributable primarily to rising material costs. Data from the 1976 Annual Survey of Manufacturers show that 60 percent of the value of product shipments in the asphalt felts and coatings industry is due to material costs, 15 percent is due to salaries, wages, and benefits, and 25 percent is due to value added;

TABLE 8-15. PRODUCER PRICE INDEX FOR ASPHALT ROOFING AND PRICE OF ASPHALT ROOFING STRIP SHINGLES, 1969-1978[20-22]

Year	Producer price index for asphalt roofing (1969=100)	Producer price of asphalt roofing strip shingles ($ per square)
1969	102.8	6.44
1970	102.7	N/A[a]
1971	125.5	7.34
1972	131.2	7.75
1973	135.5	8.30
1974	196.0	11.56
1975	225.9	13.24
1976	238.1	14.04
1977	253.0	14.95
1978 (Jan.)	277.4	16.69
1978 (Dec.)	305.2	N/A[a]

[a]N/A = not available.

TABLE 8-16. MANUFACTURERS' PRICES OF STANDARD ASPHALT SHINGLES TO DISTRIBUTOR[23]

Year	Price per square[a]	Precent increase
1974	12.57	--
1975	13.16	4.7
1976	13.98	6.2
1977	13.98	0.0
1978	15.87	13.5
1/2/79	16.51	4.0
2/1/79	17.01	3.0

[a]A square is the amount of roofing material when applied will cover 9.29 m^2 (100 ft^2) of surface.

TABLE 8-17. VALUES AND QUANTITIES OF PRODUCT SHIPMENTS IN THE ASPHALT AND TAR ROOFING AND SIDING PRODUCTS INDUSTRY, 1969-1976[11,16]

Year	Value of product shipments[a] ($ millions)	Quantities of shipments		
		Asphalt roofing (thousands of squares)	Saturated felts (thousands of Mg)	Saturated felts (thousands) of tons)
1969	406.8	84,430	835	920
1970	464.6	83,180	769	848
1971	638.5	93,246	831	916
1972	690.6	97,163	826	911
1973	828.4	102,861	864	952
1974	1,052.0	94,852	855	943
1975	1,139.6	95,828	672	741
1976	1,327.9	93,759	778	858

[a]The value of product shipments data also includes the value of siding products shipped, which are not shown. Siding products amounted to 560,000 squares in 1971 and were not reported in the following years. By 1976, the quantity shipped is estimated to be 200,000 squares.

approximately 75 to 80 percent of these product shipments are shipments from the asphalt and tar roofing and siding industry, as shown in Table 8-18. The relationship of the materials, labor and supervision, and value added costs to the product value in the asphalt roofing industry are about the same for both industries.

The price of asphalt rose dramatically in early 1974 when the price of crude oil increased from $3.01/barrel in October 1973 to $11.65/barrel in December 1973 as a result of the OPEC oil embargo and has continued to increase steadily as the price of crude oil continues to rise.[24] Table 8-19 shows that from October 1974 until January 1979 the price increase in saturant asphalt for the asphalt roofing industry was 41 percent. The Government Accounting Office predicts a crude oil price of $16/barrel by the end of 1979, and spot prices are ranging up to $28/barrel in mid-1979.

Roofing felts have increased in price in the 1970's primarily from price increases in wood pulp, wastepaper, other paper products, and asphalt. Wood pulp and wastepaper product prices increased dramatically in 1973 and 1974 as shown in Table 8-20, the same years asphalt roofing showed dramatic price increases.

Granules, parting agents, and stabilizers for the surfacing of roofing products accounted for about 16 percent of the total cost of materials in 1979 and do not have an appreciable effect on the price of asphalt roofing products. The average price of mineral products purchased from several suppliers by a large roofing manufacturing plant in March of 1979 was $44.10 to $47.40/Mg ($40 to $43/ton) for tab slate; $25.36/Mg ($23/ton) for head lap; $17.64/Mg ($16/ton) for filler; $41.89/Mg ($38/ton) for talc; and $11.02/Mg ($10/ton) for sand.[25]

8.1.2 Historical and Future Trends

Historical trends for the past 10 years and future trends for the next 5 years are described for the following aspects of the asphalt roofing industry: (1) annual changes in production, (2) industry expansion through new plants and additions to existing plants, (3) geographic concentration, (4) effects of imports and substitute products on growth, (5) changes in plant sizes, and (6) production capacity utilization.

TABLE 8-18. VALUE OF PRODUCT SHIPMENTS IN THE ASPHALT ROOFING INDUSTRY, 1969-1976[16]

Year	Value of product shipments (millions of dollars)		SIC 29523 percent of SIC 2952
	Asphalt felts and coatings (SIC 2952)[a]	Asphalt and tar roofing and siding products (SIC 29523)[b]	
1969	589.9	406.8	69.0
1970	626.4	464.6	74.2
1971	825.9	638.5	77.3
1972	902.2	690.6	76.5
1973	1,058.5	828.4	78.3
1974	1,357.0	1,052.0	77.5
1975	1,462.8	1,139.6	77.9
1976	1,699.7	1,327.9	78.1

[a]SIC 2952 is the Standard Industrial Classification Number assigned to this industry by the U.S. Census Bureau.
[b]SIC 29523 is the code for this segment of the industry.

TABLE 8-19. PURCHASE PRICES OF VARIOUS ROOFING ASPHALTS FROM 1974 TO 1979[26]

Date	Dollars/megagram					
	Asphalt flux		Saturant grade		Coating grade	
	Price	% increase	Price	% increase	Price	% increase
October 1974	65.32		68.63		70.00	
April 1976	72.76	+11.4	76.07	+10.8	77.72	+11.0
January 1979	92.60	+27.3	96.46	+26.8	98.67	+27.0
(From 1974 to 1979)		+41.8		+40.5		+40.9

Date	Dollars/ton					
	Asphalt flux		Saturant grade		Coating grade	
	Price	% increase	Price	% increase	Price	% increase
October 1974	59.25		62.25		63.50	
April 1976	66.00	+11.4	69.00	+10.8	70.50	+11.0
January 1979	84.00	+27.3	87.50	+26.8	89.50	+27.0

TABLE 8-20. PRODUCER PRICE INDICES AND PERCENT INCREASES FOR SELECTED PRODUCTS IN THE PULP, PAPER, AND ALLIED PRODUCTS INDUSTRY 1970-1978[22]

Year	Pulp, paper, and allied products		Wood pulp		Wastepaper	
	Index	Percent increase	Index	Percent increase	Index	Percent increase
1970	108.2	--	109.6	--	125.0	--
1972	113.4	4.8	111.5	1.7	133.6	6.8
1973	122.1	7.7	128.3	15.1	197.4	47.8
1974	151.7	24.2	217.8	69.8	265.5	34.4
1975	170.4	12.3	283.4	30.1	110.2	58.5
1976	179.4	5.3	286.0	0.9	184.9	67.8
1977	186.4	3.9	281.1	1.7	187.2	1.2
1978 (Jan.)	189.6	1.7	263.3	6.3	201.7	7.7

8.1.2.1 Annual Changes in Production and Product Mix. The total production of the asphalt roofing and siding industry rose from 7,267,064 Mg (8,011,324 tons) in 1969 to 8,586,134 Mg (9,465,477 tons) in 1977, or 18.2 percent. In 1970, 1974, and 1975 the total production of the industry decreased relative to the previous years while total production increased in other years. Tables 8-21 and 8-21a show the annual production quantities and annual percentage changes in total production for the industry from 1969 to 1977 in megagrams and tons, respectively.

Tables 8-21 and 8-21a also show the annual percentage changes in asphalt roofing products, asphalt and insulated siding, and saturated felts. Asphalt roofing production increased from 6,381,989 Mg (7,035,595 tons) in 1969 to 7,749,776 Mg (8,543,464 tons) in 1977, or an increase of 21.4 percent; decreases in production were experienced in 1970, 1974, and 1975, while increases were experienced in 1971, 1972, 1973, 1976, and 1977. Asphalt and insulated siding production decreased from 50,837 Mg (56,043 tons) in 1969 to 9,733 Mg (10,730 tons) in 1977, or a decrease of 81 percent; decreases in production were experienced every year except 1973. Saturated felt product production showed a slight decline from 834,248 Mg (919,687 tons) in 1969 to 826,625 Mg (911,283 tons) in 1977, or a decrease of 0.8 percent; decreases in production were experienced in 1970, 1972, 1974, and 1975, and increases were experienced in 1971, 1973, 1976, and 1977.

The trend of the past 10 years in asphalt products is expected to continue for the next 5 years. Annual production of all products will probably show years of increases and decreases with a net increase of about 4 to 8 percent over the 5-year period. Asphalt roofing products will continue to dominate the asphalt roofing and siding industry and constitute about 90 percent of the production output of the industry as they have for the past 10 years. Saturated felts will continue to constitute about 10 percent of the production output and siding products will remain at less than 0.5 percent of the production output.

Within the asphalt roofing product output sector, self-sealing strip shingles will account for about 75 percent of output; roll roofing and cap sheet will account for about 10 percent of output; and standard strip shingles and individual shingles will each account for about 2.5 percent

TABLE 8-21. ANNUAL PRODUCTION AND PERCENT ANNUAL PRODUCTION CHANGES FROM YEAR TO YEAR IN ASPHALT ROOFING AND SIDING PRODUCTIONS, 1969-1977[11]

(METRIC)

Year	Total production		Asphalt roofing		Asphalt and insulated siding		Saturated felts	
	Mg	% change	Mg	% change	Mg	% change	Mg	% change
1969	7,267,074	---	6,381,989	---	50,837	---	834,248	---
1970	7,049,600	-3.0	6,238,640	-2.2	41,502	-18.4	769,458	-7.8
1971	8,084,512	+14.7	7,213,054	15.6	40,957	-1.3	830,500	+7.9
1972	8,570,127	6.0	7,715,861	+7.0	27,860	-32.0	826,406	-0.5
1973	8,959,136	+4.5	8,054,940	+4.4	40,683	+46.0	863,509	+4.5
1974	8,315,365	-7.2	7,431,818	-7.7	27,819	-31.6	855,728	-0.9
1975	7,953,860	-4.4	7,262,449	-2.3	18,978	-31.8	672,434	-21.4
1976	8,431,890	+6.0	7,638,116	+5.2	15,276	-19.5	778,498	+15.8
1977	8,586,134	+1.8	7,759,776	+1.5	9,733	-36.3	826,625	+6.2

TABLE 8-21a. ANNUAL PRODUCTION AND PERCENT ANNUAL PRODUCTION CHANGES FROM YEAR TO YEAR IN ASPHALT ROOFING AND SIDING PRODUCTIONS, 1969-1977[11]

(ENGLISH)

Year	Total production		Asphalt roofing		Asphalt and insulated siding		Saturated felts	
	tons	% change	tons	% change	tons	% change	tons	% change
1969	8,011,324	---	7,035,595	---	56,043	---	919,687	---
1970	7,771,582	-3.0	6,877,567	-2.2	45,753	-18.4	848,262	-7.8
1971	8,912,481	+14.7	7,951,774	+15.6	45,151	-1.3	915,556	+7.9
1972	9,447,831	+6.0	8,506,076	+7.0	30,713	-32.0	911,042	-0.5
1973	9,876,675	+4.5	8,879,881	+4.4	44,850	+46.0	951,944	+4.5
1974	9,166,976	-7.2	8,192,942	-7.7	30,668	-31.6	943,366	-0.9
1975	8,768,450	-4.4	8,006,228	-2.3	20,922	-31.8	741,300	-21.4
1976	9,295,437	+6.0	8,420,368	+5.2	16,841	-19.5	858,228	+15.8
1977	9,465,477	+1.8	8,543,464	+1.5	10,730	-36.3	911,283	+6.2

of output. These ratios of output have been almost constant for the past 5 years (see Table 8-13) and are not expected to change to any extent over the next 5 years.

8.1.2.2 Industry Expansion by New Plants and Additions to Existing Plants. The Annual Survey of Manufacturers and Census of Manufacturers reported data on the total annual expenditures for new structures and additions to plants and total annual expenditures for new machinery and equipment for the asphalt felts and coatings industry as shown in Table 8-22. Approximately 75 percent of these expenditures were made by the asphalt and tar roofing and siding industry as reported in the Census of Manufacturers (1972, 1967, 1963, 1958, and 1954). In order to obtain approximate annual expenditures by the asphalt roofing and siding industry for the years 1969 to 1977, the expenditures of the asphalt coatings industry were multiplied by 0.75. These data are also shown in Table 8-22.

The expenditures in Table 8-22 are based on current dollars for the year reported and do not reflect comparable expenditures since price inflation has not been considered. Table 8-23 reflects adjustments to the estimated annual expenditures for new plants and equipment by the asphalt roofing and siding industry to constant 1957-59 dollars by using the Chemical Engineering (CE) plant cost indices for buildings and for equipment, machinery, and supports. These figures show that annual expenditures for new structures and additions to plants were less than $4 million dollars each year (in 1957-1959 dollars) and that annual expenditures for new machinery and equipment were less than $16 million dollars (in 1957-59 dollars) for the industry which had about 100 plants operating each year. An average of $56,000 (in 1957-1959 dollars) was spent per operating plant in 1969 for new structures and equipment, and this expenditure increased to $194,000 (in 1957-1959 dollars) in 1976.

Table 8-24 shows the end-of-year gross book value of depreciable assets in the asphalt felts and coatings industry and the estimated values for the asphalt and tar roofing and siding products industry. The Census of Manufacturers showed that in the census years of 1954, 1958, 1963, 1967, and 1972 about 75 percent of the end-of-year gross book value in the asphalt felts and coatings industry was attributed to the asphalt roofing industry. The estimated values for asphalt roofing in Table 8-24

TABLE 8-22. ESTIMATED ANNUAL EXPENDITURES FOR NEW PLANT AND EQUIPMENT BY THE ASPHALT ROOFING AND SIDING INDUSTRY, 1969-1976[10,16]

	Expenditures for new plant and equipment (millions of dollars)					
	Asphalt felts and coatings[a]			Asphalt roofing and siding products[b]		
Year	Total new Expenditures	New structures and additions to plant	New machinery and equipment	Total new expenditures	New structures and additions to plant	New machinery and equipment
1969	8.8	2.4	6.4	6.6	1.8	4.8
1970	11.8	2.8	9.0	8.9	2.1	6.8
1971	15.8	2.1	13.7	11.9	1.6	10.3
1972	19.7	3.2	16.5	15.2	2.5	12.7
1973	26.8	3.9	22.9	20.1	2.9	17.2
1974	35.4	7.8	27.6	26.6	5.9	20.7
1975	33.9	7.1	26.8	25.4	5.3	20.1
1976	52.1	10.1	42.1	39.1	7.5	31.6

[a]Data for asphalt felts and coatings from Annual Survey of Manufacturers (1969-1976) and Census of Manufacturers (1967 and 1972).

[b]Data for asphalt roofing and siding products are estimated. Total new expenditures assumed to be 75 percent of total new expenditures of asphalt felts and coatings. New structures and additions to plant and new machinery and equipment are in the same proportion for both industries. Data from 1972 indicate that asphalt roofing and siding comprise 75 percent of the industry business.

TABLE 8-23. ESTIMATED ANNUAL EXPENDITURES FOR NEW PLANT AND EQUIPMENT BY THE ASPHALT ROOFING AND SIDING INDUSTRY, ADJUSTED TO 1957-1959 DOLLARS, FOR 1969-1976

	1969	1970	1971	1972	1973	1974	1975	1976
Total new expenditures ($ millions)[a]	6.6	8.9	11.9	15.2	20.1	26.6	25.4	39.1
New structures and additions to plant	1.8	2.1	1.6	2.5	2.9	5.9	5.3	7.5
New machinery and equipment	4.8	6.8	10.3	12.7	17.2	20.7	20.1	31.6
CE plant cost index for building[b]	122.5	127.2	135.5	142.0	150.6	165.8	177.0	187.3
CE plant cost index for equipment[b]	116.6	123.8	130.4	135.4	141.9	171.2	194.7	205.8
Adjusted expenditures (1956-59 prices)[c]								
Total new expenditures ($ millions)	5.6	7.2	9.1	11.2	14.0	15.7	13.3	19.4
New structures and additions to plant	1.5	1.7	1.2	1.8	1.9	3.6	3.0	4.0
New machinery and equipment	4.1	5.5	7.9	9.4	12.1	12.1	10.3	15.4

[a]Data taken from estimates made in Table 8-22.
[b]Chemical Engineering plant cost index for buildings and the CE plant cost index for equipment, machinery, and supports (1957-59 = 100).[27]
[c]Adjusted expenditures are: (1) the new structures and additions to plant expenditure for each year multiplied by 100 and divided by the CE plant cost index for buildings for that year; (2) new machinery and equipment expenditures for each year multiplied by 100 and divided by the CE plant cost index for equipment, machinery, and supports for that year; and (3) the total new expenditures are the sum of (1) and (2).

TABLE 8-24. ESTIMATED END-OF-YEAR GROSS BOOK VALUE OF ASSETS IN THE ASPHALT ROOFING INDUSTRY, 1969-1976[16]

	End-of-year value of depreciable assets (millions of dollars)					
	Asphalt felts and coatings (SIC 2952)[a]			Asphalt and tar roofing and siding products (SIC 29523)[a]		
Year	Total	Structures and buildings	Machinery and equipment	Total	Structures and buildings	Machinery and equipment
1969	219.7	69.1	150.6	165	50	115
1970	229.0	74.9	154.1	170	55	115
1971	238.3	75.9	162.4	180	60	120
1972	281.3	83.2	198.1	210	60	150
1973	298.3	86.8	211.5	225	65	160
1974	339.2	101.1	238.1	255	75	180
1975	370.2	109.3	260.9	280	85	195
1976	439.5	121.1	318.4	330	90	240

[a]Data for asphalt and tar roofing and siding products (SIC 29523) are estimated. Gross book value of depreciable assets are assumed to be about 75 percent of SIC 2952.

were obtained by multiplying the values for felts and coatings by 0.75.[10] Table 8-25 shows the estimated end-of-year gross book value of depreciable assets in the asphalt roofing industry adjusted to 1957-59 dollars using the CE plant cost indices for buildings and for equipment, machinery, and supports.

The Annual Survey of Manufacturers data shown in Tables 8-24 and 8-25 include all fixed depreciable assets on the books of establishments at the end of the year.[16] The values shown (book value) represent the actual cost of assets at the time they were acquired, including all costs incurred in making the assets usable (such as transportation and installation).[16] Thus, the values shown in Tables 8-24 and 8-25 do not reflect depreciation of the buildings and equipment as do usual book values. The annual increase in end-of-year book value shown in Tables 8-24 and 8-25 indicate the increase in new plants and additions to existing plants and indicate the increase in new machinery and equipment for new plants, additional capacities at existing plants, and replacement equipment.

Based on the historical data presented in this document, it is assumed that the capacity of the asphalt roofing industry should increase at a rate of about 2 percent a year for the next 5 years. At least half of this increased capacity can be met by the expansion of existing facilities. Several companies have indicated that they will increase the productive capacity of their plants by adding a line to make roll roofing. As a result, it is assumed that three new medium plants will be built in the next 5 years. However, the increase in production may be achieved by adding new lines to existing plants.

8.1.2.3 Geographic Concentration. Figure 8-3 shows the current location of asphalt roofing production plants in the United States. It was estimated previously that 95 of these 118 plants were in operation in 1967. An estimated 15 new plants built since 1967 have been located in States which had one or more plants in the past. This estimate is based upon reported shipments of products by States in the Census of Manufacturers reports for 1967 and 1972.[10]

Table 8-12 shows that in 1970 the Northeast region accounted for 19 percent of total U.S. production of asphalt roofing and siding products; the North Central region, 31 percent; the South region, 36 percent; and

TABLE 8-25. ESTIMATED END-OF-YEAR GROSS BOOK VALUE OF DEPRECIABLE ASSETS IN THE ASPHALT ROOFING AND SIDING INDUSTRY, ADJUSTED TO 1957-1959 DOLLARS, FOR 1969-1976[16]

	1969	1970	1971	1972	1973	1974	1975	1976
Total depreciable assets ($ millions)[a]	165	170	180	210	225	255	280	330
Structures and buildings ($ millions)[a]	50	55	60	60	65	75	85	90
Machinery and equipment[a]	115	115	120	150	160	180	195	240
CE plant cost index for building[b]	122.5	127.2	135.5	142.0	150.6	165.8	177.0	187.3
CE plant cost index for equipment[b]	116.6	123.8	130.4	135.4	141.9	171.2	194.7	205.8
Adjusted expenditures (1957-59 prices)[c]								
Total depreciable assets ($ millions)[c]	139	136	136	153	156	150	148	165
Structures and buildings ($ millions)[c]	41	43	44	42	43	45	48	48
Machinery and equipment ($ millions)[c]	98	93	92	111	113	105	100	117

[a]Data taken from estimates made in Table 8-24.
[b]Chemical Engineering plant cost index for buildings and the CE plant cost index for equipment, machinery, and supports (1957-59 = 100).
[c]Adjusted expenditures are: (1) the new structures and additions to plant expenditure for each year multiplied by 100 and divided by the CE plant cost index for buildings for that year; (2) new machinery and equipment expenditures for each year multiplied by 100 and divided by the CE plant cost index for equipment, machinery, and supports for that year; and (3) the total new expenditures are the sum of (1) and (2).

the West region, 14 percent; and in 1977 the Northeast region had declined to 18 percent of U.S. production; the North Central region had increased to 32 percent; the South region had decreased to 34 percent; and the West region had increased to 16 percent. Over the next 5 years the concentration of production in the regions is not expected to change more than 3 percent either way in each region.

8.1.2.4 Effects of Imports and Substitute Products on Growth. There are no reported imports of roofing products into the United States and there are no indications that imports will have any effect on the U.S. asphalt roofing market growth over the next 5 years.[18]

The asphalt roofing industry currently has about an 80 percent share of the roofing market in the United States and competes with cedar shingles, tile, slate, and plastic products.[17] Over the next 5 years the share of the total roofing market that the asphalt roofing industry will maintain will depend upon its price relative to other products, consumer preferences, and new substitute product competition. The price of asphalt roofing products has risen dramatically in the last 10 years; thus the incentive to search for cheaper substitutes, such as plastics, has increased. It is unlikely that an acceptable substitute for asphalt roofing will be found over the next 5 years, but this possibility exists.

Dramatic increases in crude oil prices and, therefore, increases in asphalt prices are a real possibility in the near term. If asphalt prices continue to rise in relationship to the price of other materials, such as cedar, a significant shift in consumer preferences for other products could occur. Predicting a shift in preference involves too many unknowns to make a reasonable estimate of what may occur in the short term. However, it is important to note that the asphalt roofing industry could be adversely affected by any substantial price changes in petroleum products.

8.1.2.5 Changes in Plant Sizes. The size of individual plants is not reported by the asphalt roofing industry, government publications, or any other known sources. Increases in production over the next 5 years may be made by additions to existing plants, building new plants, or increasing utilization of existing capacity. Since any or all of these

possibilities may occur, it is impossible to predict how plant sizes (unknown at present) will change in the next 5 years.

8.1.2.6 Production Capacity Utilization. The historical and current total production capacity of the asphalt roofing industry and the capacities of individual plants are not reported by the U.S. Census Bureau in the Census of Manufacturers or in the Annual Survey of Manufacturers. Based on information obtained from plant surveys and supplied by plants, it is estimated that the newer asphalt roofing plant lines operate at 70 percent of their design line speed of 3.048 m/s (600 ft/min); and the typical plant operates two shifts per day, 5 days per week, and 50 weeks per year. It has been estimated that the typical plant would have a 20 percent down-time and a 9 percent average waste.

8.2 COST ANALYSIS OF REGULATORY ALTERNATIVES

In this section, the estimated capital investment costs, annualized costs, and unit product costs to construct and operate new model asphalt roofing plants are presented for small, medium, and large plants, both with and without blowing stills, as previously defined in Chapter 6. The estimated capital investment costs, annualized costs, and cost effectiveness of pollution control systems for each new facility are determined and compared for each regulatory alternative. Costs for retrofitting the pollution control systems to modified/reconstructed facilities that may make those changes identified in Chapter 5, and thus qualify as possible modified or reconstructed sources subject to standards, are not determined, since the likelihood that any existing facility will make those changes is extremely remote.

Capital investment costs represent the total investment required to construct new facilities and install pollution control systems and include direct costs, indirect costs, contractor's fees, and contingency. Annualized costs represent the variable, fixed, and overhead costs required to operate the plants, and represent the fixed and variable costs required to operate the pollution control systems. Unit product costs for each plant are the annualized cost of the plant divided by the annual production. Cost effectiveness is the annualized cost of each pollution control system divided by the quantity of particulate pollutants collected annually.

The cost analysis of the new model asphalt roofing plants and pollution control systems for the five regulatory alternatives is divided into three sections: (1) costs of new facilities without pollution control; (2) costs of pollution control for the five regulatory alternatives; and (3) cost summary. All costs are given in November 1978 dollars.

8.2.1 Costs of New Facilities Without Pollution Control

The capital investment costs, annualized costs, and unit product costs for new model asphalt roofing plants are determined for small, medium, and large plants, both with and without blow stills, as previously defined in Chapter 6. The costs presented in this section are for new facilities with no pollution control equipment and represent the costs that are required to construct and operate each facility without regard to the regulatory alternatives. Section 8.2.2 presents the costs of the pollution control equipment under each regulatory alternative and those costs must be added to the costs given in this section to determine the total costs of a new facility. Total costs are presented in the cost summary in Section 8.2.3.

8.2.1.1 Capital Investment Costs. The capital investment costs of constructing new asphalt roofing facilities calculated in this analysis are detailed estimates based upon a contractor's bid to construct a small plant in October 1973.[28] The method of estimating the capital investment costs is commonly referred to as the detailed-item estimation method and usually has an accuracy of about ±5 percent. However, the costs are updated using cost indices, and this introduces some error into current cost estimates so that the accuracy of the estimates given is about ±10 percent.

The method used to estimate the cost of the small plant involved using the contractor's October 1973 cost proposal and updating all the costs to November 1978 dollars using the Chemical Engineering (CE) Plant Cost indices and subcomponents are shown in Table 8-26.[28] The costs of the medium and large plants are estimated from the small plant costs taking into account the additional equipment and building requirements of these plants. The small plant has one roofing machine, the medium plant

TABLE 8-26. CHEMICAL ENGINEERING PLANT COST INDICES AND SUBCOMPONENTS FOR OCTOBER 1973 AND NOVEMBER 1978[29]

	Cost indices		
	October 1973	November 1978	Ratio of 1978 to 1973 indices
Chemical engineering plant cost index	146.7	224.7	1.53
Construction labor	161.7	190.3	1.18
Buildings	150.9	217.8	1.44
Engineering and supervision	130.7	165.4	1.27
Equipment, machinery, and supports	143.5	247.6	1.73
Fabricated equipment	143.7	244.1	1.70
Process machinery	139.6	235.8	1.69
Pipe, valves, and fittings	153.9	278.1	1.81
Process instruments	148.1	221.7	1.50
Pumps and compressors	140.8	266.6	1.89
Electrical equipment	105.3	173.5	1.65
Structural support and miscellaneous	141.5	258.0	1.82

has two roofing machines, and the large plant has two roofing machines and one saturated felt line.

Table 8-27 shows the estimated capital investment costs for each plant, both with and without blowing stills, excluding pollution control equipment. The cost for plants without blowing stills is $8,946,000 for the small plant, $14,501,000 for the medium plant, and $16,953,000 for the large plant; and the cost of plants with blowing stills is $9,110,000 for the small plant, $14,831,000 for the medium plant, and $17,338,000 for the large plant. The capital investment costs for the blowing stills are $160,000 for small plants, $320,000 for medium plants, and $370,000 for large plants. These costs include the purchase costs, indirect costs, and the installed cost of the blowing still, preheater, pumps, compressor, piping, and electrical equipment. All costs in Table 8-27 are determined from the information given in the contractor's October 1973 cost proposal.[28]

A description of each capital investment cost item shown in Table 8-27 is given in Sections 8.2.1.1.1. to 8.2.1.1.4.

8.2.1.1.1 Direct cost items. Sitework includes rough grading; roads on the plant property; paved parking in the loading dock and office building areas; 213 m (700 ft) of railroad track; 366 m (1,200 ft) of 2.1-m (7-ft) high, aluminum-coated fence and two sliding gates; stone grading; fill and compacting; excavation and backfill; drainage system; and dewatering.

The manufacturing and warehouse building is constructed of prefabricated, 26-gauge, prepainted metal roof and sidings on a 0.2-m (8-in.), reinforced concrete floor in the manufacturing section and a 0.15 m (6 in.) reinforced concrete floor in the warehouse section. The building includes a high bay section over the roofing machine(s), machine room, utility and electric room, warehouse, office, locker room, pump house, and machine shop. Also included in the building cost are concrete foundations for the silo area and still yard; heating units for the warehouse; steam unit heaters; air conditioning for office area; plumbing fixtures; dock levelers; and partitions, light, heating, and air conditioning for the office. The cost of land is excluded in this analysis.

TABLE 8-27. ESTIMATED CAPITAL INVESTMENT COSTS OF NEW ASPHALT ROOFING FACILITIES WITHOUT POLLUTION CONTROL EQUIPMENT

Capital investment item	Capital cost (November 1978 dollars) Small plant	Medium plant	Large plant
Plants without blowing stills			
Direct costs			
Sitework	225,000	245,000	270,000
Buildings	1,350,000	2,150,000	2,700,000
Fired heaters	290,000	435,000	540,000
Heat exchangers	30,000	50,000	60,000
Process and storage tanks	645,000	965,000	1,035,000
Pumps and compressors	150,000	300,000	335,000
Fire protection system	195,000	235,000	255,000
Electrical equipment	560,000	675,000	700,000
Instruments and controls	80,000	120,000	135,000
Piping, ductwork, and insulation	890,000	1,400,000	1,580,000
Materials handling systems	315,000	475,000	480,000
Roofing machine(s)	1,310,000	2,620,000	3,060,000
Miscellaneous structural steel	160,000	240,000	260,000
Miscellaneous equipment	100,000	120,000	150,000
Total direct cost (D)	6,300,000	10,030,000	11,560,000
Indirect costs			
Engineering and supervision	300,000	350,000	370,000
Construction overhead	200,000	320,000	360,000
Total indirect cost	500,000	670,000	730,000
Contractor's fee (~5% D)	300,000	500,000	580,000
Contingency (~5% D)	300,000	500,000	600,000
Working capital (~10% D)	1,546,000	2,801,000	3,483,000
Total investment cost	8,946,000	14,501,000	16,953,000
Plants with Blowing Stills			
Investment cost without stills	8,946,000	14,501,000	16,953,000
Blowing stills	160,000	320,000	370,000
Increased working capital	4,000	10,000	15,000
Total investment cost	9,110,000	14,831,000	17,338,000

8.2.1.1.2 Indirect cost items. Costs for construction design and engineering, drafting, purchasing, accounting, cost engineering, and travel are included in engineering and supervision of the plant construction.

Items such as temporary construction facilities, tools, rentals, travel, living expenses, taxes, and insurance are included in construction overhead. This cost item is estimated at about 3 percent of the total direct costs for each plant.

8.2.1.1.3 Contractor's fee. The contractor's fee will vary for different contractors, and is estimated to be about 5 percent of the total direct costs of each plant.

8.2.1.1.4 Contingency. The contingency factor is added to compensate for work stoppages, weather problems, and other unpredictable events; design changes during construction; underestimation errors; and expenses not specifically listed which are likely to occur. In this analysis a contingency factor of about 5 percent of the total direct costs for each plant is added to the total capital investment cost.

8.2.1.2 Annualized Costs. The annualized costs for each model plant will be the sum of variable costs, fixed costs, and plant overhead. The following list shows the operating cost items considered in this study:

Variable costs	Fixed costs
Raw materials	Capital recovery
Operating labor	Taxes and insurance
Supervision and clerical labor	General and administrative
Maintenance labor and materials	
Operating supplies	
Process utilities	
Laboratory services	Plant Overhead
Payroll charges	

The annualized cost (in November 1978 dollars) for plants with blowing stills is $14,645,600 for small plants, $26,580,400 for medium plants, and $34,221,400 for large plants. The annualized cost for plants without blowing stills is $14,722,500 for small plants, $26,737,400 for

medium plants, and $34,445,100 for large plants. These costs are shown in Table 8-28 and are based on plants operating 16 hours/day, 250 days/year. The inputs used to determine these costs are shown below.

8.2.1.2.1 Variable costs. Variable costs include raw materials, operating labor, supervision and clerical labor, maintenance labor and materials, operating supplies, process utilities, laboratory services, and payroll charges.

Asphalt, dry felt, filler, talc, and granules are the basic raw materials used in asphalt roofing plants. The quantities of each material used annually by each model plant were previously given in Table 6-3, and the prices (in November 1978 dollars), which were previously given in section 8.1.5, are:

1. blown asphalt - $97/Mg ($88/ton);[30]
2. asphalt flux - $92.60/Mg ($84/ton);[30]
3. dry felt - $235.92/Mg ($214/ton);[31]
4. filler - $17.64/Mg ($16/ton);[32]
5. talc - $41.90/Mg ($38/ton);[32] and
6. granules - $44.10/Mg ($40/ton).[32]

Tables 8-29 and 8-29a show the annual quantities and costs of raw materials used by each model plant.

A roofing shingle line or saturated felt line requires 14 operators per shift for operations; materials handling requires three operators per shift; warehousing requires three operators per shift; shipping and receiving requires two operators per day; blowing stills require two operators per shift; and miscellaneous operating labor requires two operators per shift. Each plant operates two shifts per day. The small plant operates the blowing still one shift, and the medium and large plants operate the blowing stills two shifts. The saturated felt line at the large plant is operated on only one shift.

The total operating labor required for each model plant without blowing stills is: small plant, 46 people; medium plant, 74 people; and large plant, 88 people. Total operating labor for plants with blowing stills is: small plant, 48 people; medium plant, 78 people; and large plant, 92 people.

TABLE 8-28. ESTIMATED TOTAL ANNUALIZED COSTS FOR NEW ASPHALT ROOFING PLANTS WITHOUT POLLUTION CONTROL EQUIPMENT

Annualized cost item	Annualized costs (November 1978 dollars)					
	Small plant		Medium plant		Large plant	
	With blowing stills	Without blowing stills	With blowing stills	Without blowing stills	With blowing stills	Without blowing stills
Variable costs						
Raw materials	10,058,900	10,262,600	20,295,400	20,706,100	25,488,600	26,001,100
Operating labor	658,600	631,100	1,070,200	1,015,300	1,262,200	1,207,400
Supervision and clerical labor	218,000	218,000	230,000	230,000	286,000	286,000
Maintenance	497,000	492,000	672,400	662,400	802,800	792,800
Operating supplies	49,700	49,200	67,200	66,200	80,300	79,300
Process utilities	424,600	385,600	850,800	772,900	1,091,900	995,000
Laboratory services	10,000	10,000	20,000	20,000	20,000	20,000
Payroll charges	235,700	230,200	332,500	321,500	394,200	383,200
Subtotal	12,152,500	12,278,700	23,538,500	23,794,400	29,426,000	29,764,800
Fixed costs						
Capital recovery	1,482,700	1,456,000	2,413,700	2,360,000	2,821,800	2,759,100
Taxes and insurance	182,200	178,900	296,600	290,000	346,800	339,100
General and administrative	182,200	178,900	296,600	290,000	346,800	339,100
Subtotal	1,847,100	1,813,800	3,006,900	2,940,000	3,515,400	3,437,300
Plant overhead	636,000	630,000	1,035,000	1,003,000	1,280,000	1,243,000
Total	14,645,600	14,722,500	27,580,400	27,737,400	34,221,400	34,445,100

TABLE 8-29. ANNUAL RAW MATERIAL COSTS FOR ASPHALT ROOFING PLANTS (METRIC)

Raw material	Unit costs dollars	Raw material costs without blowing stills (November 1978 dollars)					
		Small plant		Medium plant		Large plant	
		Quantity Mg/yr	Cost $1,000	Quantity Mg/yr	Cost $1,000	Quantity Mg/yr	Cost $1,000
Blown asphalt	97.00/Mg	46,200	4,481.8	93,128	9,035.0	116,219	11,274.6
Felt	235.92/Mg	15,175	3,580.2	30,811	7,269.6	39,088	9,221.3
Filler	17.64/Mg	20,462	361.0	40,924	721.9	51,155	902.2
Granules	44.10/Mg	40,685	1,794.0	81,372	3,588.4	101,716	4,485.2
Talc	41.90/Mg	1,089	45.6	2,177	91.2	2,812	117.8
Total costs			10,262.6		20,706.1		26,001.1

Raw material	Unit costs dollars	Raw material costs with blowing stills (November 1978 dollars)					
		Small plant		Medium plant		Large plant	
		Quantity Mg/yr	Cost $1,000	Quantity Mg/yr	Cost $1,000	Quantity Mg/yr	Cost $1,000
Asphalt flux	92.60/Mg	46,200	4,278.1	93,128	8,624.3	116,219	10,762.1
Felt	235.92/Mg	15,175	3,580.2	30,811	7,269.6	39,088	9,221.3
Filler	17.64/Mg	20,462	361.0	40,924	721.9	51,155	902.2
Granules	44.10/Mg	40,685	1,794.0	81,372	3,588.4	101,716	4,485.2
Talc	41.90/Mg	1,089	45.6	2,177	91.2	2,812	117.8
Total costs			10,058.9		20,295.4		25,488.6

TABLE 8-29a. ANNUAL RAW MATERIAL COSTS FOR ASPHALT ROOFING PLANTS (ENGLISH)

Raw material	Unit costs dollars	Raw material costs without blowing stills (November 1978 dollars)					
		Small plant		Medium plant		Large plant	
		Quantity tons/yr	Cost $1,000	Quantity tons/yr	Cost $1,000	Quantity tons/yr	Cost $1,000
Blown asphalt	88/ton	50,930	4,481.8	102,666	9,035.0	128,122	11,274.6
Felt	214/ton	16,730	3,580.2	33,967	7,269.6	43,091	9,221.3
Filler	16/ton	22,558	361.0	45,115	721.9	56,394	902.2
Granules	40/ton	44,852	1,794.0	89,706	3,588.4	112,133	4,485.2
Talc	38/ton	1,200	45.6	2,400	91.2	3,100	117.8
Total costs			10,262.6		20,706.1		26,001.1

Raw material	Unit costs dollars	Raw material costs with blowing stills (November 1978 dollars)					
		Small plant		Medium plant		Large plant	
		Quantity tons/yr	Cost $1,000	Quantity tons/yr	Cost $1,000	Quantity tons/yr	Cost $1,000
Asphalt flux	84/ton	50,930	4,278.1	102,666	8,624.3	128,122	10,762.1
Felt	214/ton	16,730	3,580.2	33,967	7,269.6	43,091	9,221.3
Filler	16/ton	22,558	361.0	45,115	721.9	56,394	902.2
Granules	40/ton	44,852	1,794.0	89,706	3,588.4	112,133	4,485.2
Talc	38/ton	1,200	45.6	2,400	91.2	3,100	117.8
Total costs			10,058.9		20,295.4		25,488.6

Wages for production workers in the paving and roofing materials industry (SIC 295) in November 1978 were $6.86/h.[33] At this wage rate, the annual operating labor cost for each model plant is:

ANNUAL OPERATING LABOR HOURS AND COSTS (NOVEMBER 1978 DOLLARS)

	Without blowing stills		With blowing stills	
Model plant size	Labor hours	Cost ($)	Labor hours	Cost ($)
Small	92,000	631,100	96,000	658,600
Medium	148,000	1,015,300	156,000	1,070,200
Large	176,000	1,207,400	184,000	1,262,200

Each plant requires a plant manager and plant superintendent. The small and medium plants require four foremen each, and the large plant requires six foremen. The small plant requires five clerical workers, the medium plant requires six, and the large plant requires seven.

The salaries of each person are assumed to be $40,000 for the plant manager, $30,000 for the superintendent, $22,000 for the foremen, and $12,000 for the clerical workers. At these salaries, the cost of supervision and clerical labor for each plant is: small plant, $218,000; medium plant, $230,000; and large plant, $286,000.

An asphalt roofing plant requires constant maintenance and repair operations. Four shifts of maintenance workers are used, and a small plant requires 5 workers per shift, or 20 workers; a medium plant requires 6 workers per shift, or 24 workers; and a large plant requires 7 workers per shift, or 28 workers.

The wage rate of maintenance workers is assumed to be 10 percent more than the production workers, or $7.55/h. At this wage rate, the annual maintenance labor cost for each model plant size is: small plant, $302,000; medium plant, $362,400; and large plant, $422,800.

The materials required for annual maintenance and repairs are assumed to be about 3 percent of the direct capital investment costs of each plant, or $190,000 for the small plants, $300,000 for the medium plants, and $370,000 for the large plants without blowing stills; and $195,000 for the small plants, $310,000 for the medium plants, and $380,000 for the large plants with blowing stills.

The total annual maintenance labor and material costs for each plant are: small plant without blowing stills, $492,000; small plant with blowing stills, $497,000; medium plant without blowing stills, $662,400; medium plant with blowing stills, $672,400; large plant without blowing stills, $792,800; and large plant with blowing stills, $802,800.

Miscellaneous operating supplies, such as charts, lubricants, small tools, and similar items, which are neither raw materials nor maintenance and repair materials, are required in the plant operation. The annual cost of these supplies is estimated to be 10 percent of the maintenance labor and materials cost, or about $49,200 and $49,700 for the small plants, $66,200 and $67,200 for the medium plants, and $79,300 and $80,300 for the large plants, without and with blowing stills, respectively.

The process utilities, energy and water usage, of the model plants with an electrostatic precipitator (ESP) on the saturator, afterburner with heat recovery and cyclone on the blowing stills, and cyclones on the materials handling operations were shown previously in Table 6-3. In Tables 8-30 and 8-30a the annual utility requirements and annual cost of water, natural gas, No. 2 fuel oil, and electricity are shown for each plant size, both with and without blowing stills, for model plants with no pollution control devices. The data in this table were derived by subtracting the energy requirements for the baseline pollution control equipment from the figures shown in Table 6-3. It was assumed that the afterburners are fired with No. 2 fuel oil and the asphalt blowing still preheaters are fired with natural gas.

No laboratory services are normally required at an asphalt roofing plant. However, an allowance of $10,000 for small plants and $20,000 for medium and large plants is made for contract laboratory services which may be required periodically for quality control.

Payroll charges are assumed to be about 20 percent of the wages paid to all employees, or about $235,700 for small plants with blowing stills; $230,200 for small plants without blowing stills; $332,500 for medium plants with blowing stills; $321,500 for medium plants without blowing stills; $394,200 for large plants with blowing stills; and $383,200 for plants without blowing stills.

TABLE 8-30. ANNUAL UTILITY REQUIREMENTS AND COSTS FOR MODEL ASPHALT ROOFING PLANTS WITHOUT POLLUTION CONTROL EQUIPMENT (METRIC)[35-37]

Type of plant	Annual utility usage and costs (November 1978 dollars)								
	Water		Natural gas		No. 2 fuel oil		Electricity		
	Usage ($m^3 \times 10^3$)	Cost[a] ($)	Usage (joules $\times 10^{13}$)	Cost[b] ($)	Usage (m^3)	Cost[c] ($)	Usage (joules $\times 10^{12}$)	Cost[d] ($)	Total cost ($)
Small									
With blow still	272	28,800	7.84	183,500	689	94,600	10.33	117,700	424,600
Without blow still	62	6,600	7.31	171,200	689	94,600	9.94	113,200	385,600
Medium									
With blow still	541	57,300	15.68	367,000	1,385	190,300	20.74	236,200	850,800
Without blow still	125	13,200	14.62	342,300	1,385	190,300	19.94	227,100	772,900
Large									
With blow still	694	73,500	20.08	470,000	1,798	247,000	26.46	301,400	1,091,900
Without blow still	159	16,800	18.78	439,700	1,798	247,000	25.60	291,400	995,000

[a]Based on a cost of about $0.106/m^3$.
[b]Based on a cost of $0.234/joules x 10^8.
[c]Based on a cost of $127.30/m^3$.
[d]Based on a cost of $11.39/joules x 10^9.

TABLE 8-30a. ANNUAL UTILITY REQUIREMENTS AND COSTS FOR MODEL ASPHALT ROOFING PLANTS WITHOUT POLLUTION CONTROL EQUIPMENT (ENGLISH)[35-37]

	Annual utility usage and costs (November 1978 dollars)								
	Water		Natural gas		No. 2 fuel oil		Electricity		
Type of plant	Usage ($ft^3 x 10^6$)	Cost[a] ($)	Usage (therms $x10^6$)	Cost[b] ($)	Usage (gal)	Cost[c] ($)	Usage (kWh $x10^6$)	Cost[d] ($)	Total cost ($)
Small									
With blow still	9.6	28,800	0.743	183,500	182,000	94,600	2.87	117,700	424,600
Without blow still	2.2	6,600	0.693	171,200	182,000	94,600	2.76	113,200	385,600
Medium									
With blow still	19.1	57,300	1.486	367,000	366,000	190,300	5.76	236,200	850,800
Without blow still	4.4	13,200	1.386	342,300	366,000	190,300	5.54	227,100	772,900
Large									
With blow still	24.5	73,500	1.903	470,000	475,000	247,000	7.35	301,400	1,091,900
Without blow still	5.6	16,800	1.780	439,700	475,000	247,000	7.11	291,500	995,000

[a]Based on a cost of about $0.30/100 ft^3.
[b]Based on a cost of $0.247/therm.
[c]Based on a cost of $0.52/gal.
[d]Based on a cost of $0.041/kWh.

8.2.1.2.2 Fixed costs. Fixed costs include capital recovery of the total capital investment cost, taxes, insurance, and general and administrative expenses.

Interest is assumed to be 10 percent annually, and the total capital investment cost is recovered over a 10-year period. The capital recovery factor (n=10, i=0.10) is 0.16275. Therefore, the annual capital recovery costs are:

ANNUAL CAPITAL RECOVERY COST ($)

	Small plant	Medium plant	Large plant
Plant without blowing stills	1,456,200	2,360,000	2,759,100
Plant with blowing stills	1,482,700	2,413,700	2,821,800

The annual cost of taxes and insurance is assumed to be 2 percent of the total capital investment cost for each plant. This cost for plants without blowing stills is $178,900 for small plants, $290,000 for medium plants, and $339,100 for large plants; and for plants with blowing stills is $182,200 for small plants, $296,600 for medium plants, and $346,800 for large plants.

General and administrative expenses are assumed to be 2 percent of the total capital investment cost for each plant and are equal to the costs of taxes and insurance given above.

8.2.1.2.3 Plant overhead. Plant overhead is a charge to the costs of the manufacturing facility which are not chargeable to any particular operation. Overhead includes such cost items as medical services, general engineering and contracting to others, plant utilities, plant guards, janitors, cafeterias, administrative offices, accounting, and purchasing. Overhead costs will vary from company to company and are usually calculated as a percentage of direct labor cost or a percentage of installed capital investment for the entire facility. Plant overhead is estimated to be 10 percent of the direct capital investment cost for each plant.

8.2.1.3 Unit Product Costs. Table 8-31 shows the annualized cost of each plant, quantities of asphalt roofing shingles produced annually by each plant, and the unit cost of the products. The small plants produce 109,759 Mg (121,000 tons) of product annually, the medium plants

TABLE 8-31. ANNUALIZED COSTS AND UNIT PRODUCT COSTS OF NEW MODEL ASPHALT ROOFING PLANTS WITHOUT POLLUTION CONTROL SYSTEMS

Plant size and description	Annualized cost $	Annual production of roofing shingles Sales squares	Unit costs of roofing shingles[a] $/sales squares
Small			
With blow stills	14,645,600	1,030,000	14.22
Without blow stills	14,722,500	1,030,000	14.29
Medium			
With blow stills	27,580,400	2,060,000	13.38
Without blow stills	27,737,400	2,060,000	13.46
Large			
With blow stills	34,221,400	2,640,000	12.96
Without blow stills	34,445,100	2,640,000	13.05

[a]November 1978 dollars.

produce 219,518 Mg (242,000 tons) of product annually, and the large plants produce 281,201 Mg (310,000 tons) of product annually. About 97 percent (on a weight basis) of the product manufactured by each plant is assumed to be asphalt roofing strip shingles and 3 percent is saturated felt. For the purpose of determining the unit product costs, all of the production at each plant is assumed to be asphalt roofing strip shingles.

An asphalt roofing strip shingle sales square weighs 106.6 kg (235 lb). A small plant produces 1,030,000 sales squares per year; a medium plant produces 2,060,000 sales squares per year; and a large plant produces 2,640,000 sales squares per year.[38] The unit product costs for each plant are determined by dividing the annualized cost by the annual production of sales squares.

8.2.2 Costs of Pollution Control for the Five Regulatory Alternatives

The capital investment costs, annualized costs, and cost effectiveness of particulate pollution control systems for the model asphalt roofing plants are determined for six basic types of devices: electrostatic precipitators (ESP), high velocity air filers (HVAF), afterburners with heat recovery (A/B W/HR), cyclones (CYC), mist eliminators (M/E), and fabric filters (F/F). Capital investment costs include the purchase cost of the basic control equipment and auxiliary equipment, the installation cost, foundations and supports, ductwork, stacks, electrical, piping, insulation, painting, pumps, contractor's fee, contingency, and other indirect costs. Annualized costs are the sum of variable costs (operating labor, supervision, maintenance labor, maintenance and repair materials, process utilities, and payroll charges) and fixed costs (capital recovery, taxes, insurance and general and administrative expenses). Cost effectiveness is the annualized cost of the control system divided by the quantity of pollutants collected annually by the system.

The discussion which follows is divided into the following sections: (1) description of the pollution control systems for each regulatory alternative, (2) description of the individual pollution control devices, (3) annual particulate emissions from model asphalt roofing plants and the control systems, (4) capital investment costs; (5) capital investment cost comparisons, (6) annualized costs, (7) annualized operating cost

comparisons, (8) cost effectiveness, and (9) cost effectiveness comparisons.

8.2.2.1 Description of the Pollution Control Systems for Each Regulatory Alternative. The pollution control systems required for each regulatory alternative were discussed in Chapter 6 and shown in Tables 6-4 and 6-5 and in Figures 6-1 to 6-6. The information presented in those tables and figures is used in this chapter to describe more specific systems for each model plant and regulatory alternative. The costs of the pollution control systems and the individual pollution control devices presented in this chapter are based upon the descriptions given here.

Tables 8-32 and 8-32a show the pollution control systems and operating characteristics for baseline model asphalt roofing plants, and Tables 8-33 and 8-33a show the pollution control systems and operating characteristics for the model asphalt roofing plants for Regulatory Alternatives 2 through 5. Each model plant size (small, medium, and large) has two configurations: Configuration 1 for plants with blowing stills and Configuration 2 for plants without blowing stills. Five basic operations are considered at each plant for each control system under each regulatory alternative as follows: (1) saturator, wet looper, and coater, (2) filler surge bin and storage, (3) parting agent bin and storage, (4) asphalt storage, and (5) blowing stills. The saturator, wet looper, and coater operation may be controlled by one ESP, one HVAF, or one A/B W/HR in small plants; two ESP's, two HVAF's, or two A/B's W/HR in medium plants; and three ESP's, three HVAF's, or three A/B's W/HR in large plants.

The filler surge bin and storage operation and the parting agent bin and storage operation may each be controlled by either one cyclone or one fabric filter, or each operation may be controlled by a separate control device. The emissions from both the filler surge bin and storage operation may be controlled by the same device, and the parting agent bin and storage operation may be controlled by the same device. The asphalt storage operation may be uncontrolled, controlled by the saturator control device during plant operations, and controlled by a mist eliminator when the plant is not operating. The blowing stills are controlled by one A/B W/HR.

TABLE 8-32. POLLUTION CONTROL SYSTEMS AND OPERATING CHARACTERISTICS FOR BASELINE ASPHALT ROOFING MODEL PLANTS (METRIC)

		Control devices, airflow (Nm^3/s), and operating temperature (°C) for each operation											
		Saturator wet looper, and coater			Filler surge bin and storage		Parting agent bin and storage		Asphalt storage		Blowing stills		
Plant size	Plant configuration	Control device(s)	Nm^3/s[a]	°C	Control device	Nm^3/s[b]	Control device	Nm^3/s[b]	Control device	Nm^3/s	Control device	Nm^3/s	°C
Small	1	ESP[c]	4.93	93	CYC[f]	1.04	CYC	0.66	None	--	A/B W/HR	2.83	482
	1	HVAF[d]	4.93	93	CYC	1.04	CYC	0.66	None	--	A/B W/HR	2.83	482
	1	A/B W/HR[e]	4.93	482	CYC	1.04	CYC	0.66	None	--	A/B W/HR	2.83	482
	2[h]	ESP	4.93	93	CYC	1.04	CYC	0.66	None	--	N/A[g]	--	--
	2	HVAF	4.93	93	CYC	1.04	CYC	0.66	None	--	N/A	--	--
	2	A/B W/HR	4.93	482	CYC	1.04	CYC	0.66	None	--	N/A	--	--
Medium	1	ESP	9.79	93	CYC	1.37	CYC	0.99	None	--	A/B W/HR	2.83	482
	1	HVAF	9.79	93	CYC	1.37	CYC	0.99	None	--	A/B W/HR	2.83	482
	1	A/B W/HR	9.79	482	CYC	1.37	CYC	0.99	None	--	A/B W/HR	2.83	482
	2	ESP	9.79	93	CYC	1.37	CYC	0.99	None	--	N/A	--	--
	2	HVAF	9.79	93	CYC	1.37	CYC	0.99	None	--	N/A	--	--
	2	A/B W/HR	9.79	482	CYC	1.37	CYC	0.99	None	--	N/A	--	--
Large	1	ESP	14.58	93	CYC	1.37	CYC	0.99	None	--	A/B W/HR	3.30	482
	1	HVAF	14.58	93	CYC	1.37	CYC	0.99	None	--	A/B W/HR	3.30	482
	1	A/B W/HR	14.58	482	CYC	1.37	CYC	0.99	None	--	A/B W/HR	3.30	482
	2	ESP	14.58	93	CYC	1.37	CYC	0.99	None	--	N/A	--	--
	2	HVAF	14.58	93	CYC	1.37	CYC	0.99	None	--	N/A	--	--
	2	A/B W/HR	14.58	482	CYC	1.37	CYC	0.99	None	--	N/A	--	--

[a] Nm^3/s = normal cubic meter per second (21°C, 101,325 Pa).
[b] The control devices on the filler surge bin and storage and on the parting agent bin and storage operations operate at ambient temperatures.
[c] ESP = electrostatic precipitator.
[d] HVAF = high velocity air filter.
[e] A/B W/HR = afterburner with heat recovery.
[f] CYC = cyclone.
[g] N/A = not applicable.
[h] Configuration 1 is a plant with blowing stills and Configuration 2 is a plant without blowing stills.

TABLE 8-32a. POLLTUION CONTROL SYSTEMS AND OPERATING CHARACTERISTICS FOR BASELINE ASPHALT ROOFING MODEL PLANTS (ENGLISH)

		Control devices, airflow (scfm), and operating temperature (°F) for each operation											
		Saturator wet looper, and coater			Filler surge bin and storage		Parting agent bin and storage		Asphalt storage		Blowing stills		
Plant size	Plant configuration	Control device(s)	scfm[a]	°F	Control device	scfm[b]	Control device	scfm[b]	Control device	scfm	Control device	scfm	°F
Small	1	ESP[c]	10,450	200	CYC[f]	2,200	CYC	1,400	None	--	A/B W/HR	6,000	900
	1	HVAF[d]	10,450	200	CYC	2,200	CYC	1,400	None	--	A/B W/HR	6,000	900
	1	A/B W/HR[e]	10,450	900	CYC	2,200	CYC	1,400	None	--	A/B W/HR	6,000	900
	2[h]	ESP	10,450	200	CYC	2,200	CYC	1,400	None	--	N/A[g]	--	--
	2	HVAF	10,450	200	CYC	2,200	CYC	1,400	None	--	N/A	--	--
	2	A/B W/HR	10,450	900	CYC	2,200	CYC	1,400	None	--	N/A	--	--
Medium	1	ESP	20,750	200	CYC	2,900	CYC	2,100	None	--	A/B W/HR	6,000	900
	1	HVAF	20,750	200	CYC	2,900	CYC	2,100	None	--	A/B W/HR	6,000	900
	1	A/B W/HR	20,750	900	CYC	2,900	CYC	2,100	None	--	A/B W/HR	6,000	900
	2	ESP	20,750	200	CYC	2,900	CYC	2,100	None	--	N/A	--	--
	2	HVAF	20,750	200	CYC	2,900	CYC	2,100	None	--	N/A	--	--
	2	A/B W/HR	20,750	900	CYC	2,900	CYC	2,100	None	--	N/A	--	--
Large	1	ESP	30,900	200	CYC	2,900	CYC	2,100	None	--	A/B W/HR	7,000	900
	1	HVAF	30,900	200	CYC	2,900	CYC	2,100	None	--	A/B W/HR	7,000	900
	1	A/B W/HR	30,900	900	CYC	2,900	CYC	2,100	None	-	A/B W/HR	7,000	900
	2	ESP	30,900	200	CYC	2,900	CYC	2,100	None	--	N/A	--	--
	2	HVAF	30,900	200	CYC	2,900	CYC	2,100	None	--	N/A	--	--
	2	A/B W/HR	30,900	900	CYC	2,900	CYC	2,100	None	--	N/A	--	--

[a] scfm = standard cubic feet per minute (70°F, 1 atmosphere).
[b] The control devices on the filler surge bin and storage and on the parting agent bin and storage operations operate at ambient temperatures.
[c] ESP = electrostatic precipitator.
[d] HVAF = high velocity air filter.
[e] A/B W/HR = afterburner with heat recovery.
[f] CYC = cyclone.
[g] N/A = not applicable.
[h] Configuration 1 is a plant with blowing stills and Configuration 2 is a plant without blowing stills.

TABLE 8-33. POLLUTION CONTROL SYSTEMS AND OPERATING CHARACTERISTICS FOR REGULATORY ALTERNATIVES 2 TO 5 (METRIC)

Plant size	Plant configuration	Control devices, airflow (Nm^3/s)[a] and operating temperature (°C) for each operation											
		Saturator, wet looper, and coater			Filler surge bin and storage		Parting agent bin and storage		Asphalt storage		Blowing stills		
		Control device(s)[b]	Nm^3/s	°C	Control device[c]	Nm^3/s[d]	Control device[c]	Nm^3/s[d]	Control device	Nm^3/s[d]	Control device	Nm^3/s	°C[e]
Small	1	ESP[f]	4.93	38	CYC[j] or F/F[k]	1.04	CYC or F/F	0.66	M/E[l]	0.21	A/B W/HR	2.83	760
	1	HVAF[g]	4.93	38	CYC or F/F	1.04	CYC or F/F	0.66	M/E	0.21	A/B W/HR	2.83	760
	1	A/B W/HR[h]	4.93	760	CYC or F/F	1.04	CYC or F/F	0.66	M/E	0.21	A/B W/HR	2.83	760
	2	ESP	4.93	38	CYC or F/F	1.04	CYC or F/F	0.66	M/E	0.21	N/A[m]	2.83	760
	2[n]	HVAF	4.93	38	CYC or F/F	1.04	CYC or F/F	0.66	M/E	0.21	N/A		--
	2	A/B W/HR	4.93	760	CYC or F/F	1.04	CYC or F/F	0.66	M/E	0.21	N/A		--
Medium	1	ESP	9.79	38	CYC or F/F	1.37	CYC or F/F	0.99	M/E	0.35	A/B W/HR	2.83	760
	1	HVAF	9.79	38	CYC or F/F	1.37	CYC or F/F	0.99	M/E	0.35	A/B W/HR	2.83	760
	1	A/B W/HR	9.79	760	CYC or F/F	1.37	CYC or F/F	0.99	M/E	0.35	A/B W/HR	2.83	760
	2	ESP	9.79	38	CYC or F/F	1.37	CYC or F/F	0.99	M/E	0.35	N/A		--
	2	HVAF	9.79	38	CYC or F/F	1.37	CYC or F/F	0.99	M/E	0.35	N/A		--
	2	A/B W/HR	9.79	760	CYC or F/F	1.37	CYC or F/F	0.99	M/E	0.35	N/A		--
Large	1	ESP	14.58	38	CYC or F/F	1.37	CYC or F/F	0.99	M/E	0.35	A/B W/HR	3.30	760
	1	HVAF	14.58	38	CYC or F/F	1.37	CYC or F/F	0.99	M/E	0.35	A/B W/HR	3.30	760
	1	A/B W/HR	14.58	760	CYC or F/F	1.37	CYC or F/F	0.99	M/E	0.35	A/B W/HR	3.30	760
	2	ESP	14.58	38	CYC or F/F	1.37	CYC or F/F	0.99	M/E	0.35	N/A		--
	2	HVAF	14.58	38	CYC or F/F	1.37	CYC or F/F	0.99	M/E	0.35	N/A		--
	2	A/B W/HR	14.58	760	CYC or F/F	1.37	CYC or F/F	0.99	M/E	0.35	N/A		--

[a] Nm^3/s = normal cubic meter per second (21°C, 101,325 Pa).
[b] The ESP and HVAF are preceded by a water spray to cool the inlet air from 93°C to 38°C.
[c] The cyclone is used for Regulatory Alternatives 2 and 3 and the F/F for Alternatives 4 and 5.
[d] The control devices on the filler surge bin and storage and on the parting agent bin and storage operate at ambient temperature. The mist eliminator on the asphalt storage tanks operates at 54°C.
[e] The A/B W/HR operates at 482°C for Regulatory Alternatives 2 and 4 and operates at 760°C for Alternatives 3 and 5.
[g] HVAF = high velocity air filter.
[h] A/B W/HR = afterburner with heat recovery.
[j] CYC = cyclone.
[k] F/F = fabric filter.
[l] M/E = mist eliminator.
[m] N/A = not applicable.
[n] Configuration 1 is a plant with blowing stills, and Configuration 2 is a plant without blowing stills.

TABLE 8-33a. POLLUTION CONTROL SYSTEMS AND OPERATING CHARACTERISTICS FOR REGULATORY ALTERNATIVES 2 TO 5 (ENGLISH)

Plant size	Plant configuration	Control devices, airflow (scfm)[a] and operating temperature (°F) for each operation: Saturator, wet looper, and coater: Control device(s)[b]	scfm	°F	Filler surge bin and storage: Control device[c]	scfm[d]	Parting agent bin and storage: Control device	scfm[d]	Asphalt storage: Control device[e]	scfm[d]	Blowing stills: Control device	scfm	°F[e]
Small	1	ESP[f]	10,450	100	CYC[j] or F/F[k]	2,200	CYC or F/F	1,400	M/E[l]	450	A/B W/HR	6,000	1400
	1	HVAF[g]	10,450	100	CYC or F/F	2,200	CYC or F/F	1,400	M/E	450	A/B W/HR	6,000	1400
	1	A/B W/HR[h]	10,450	1400	CYC or F/F	2,200	CYC or F/F	1,400	M/E	450	A/B W/HR	6,000	1400
	2	ESP	10,450	100	CYC or F/F	2,200	CYC or F/F	1,400	M/E	450	N/A[m]	--	--
	2	HVAF	10,450	100	CYC or F/F	2,200	CYC or F/F	1,400	M/E	450	N/A	--	--
	2[n]	A/B W/HR	10,450	1400	CYC or F/F	2,200	CYC or F/F	1,400	M/E	450	N/A	--	--
Medium	1	ESP	20,750	100	CYC or F/F	2,900	CYC or F/F	2,100	M/E	750	A/B W/HR	6,000	1400
	1	HVAF	20,750	100	CYC or F/F	2,900	CYC or F/F	2,100	M/E	750	A/B W/HR	6,000	1400
	1	A/B W/HR	20,750	1400	CYC or F/F	2,900	CYC or F/F	2,100	M/E	750	A/B W/HR	6,000	1400
	2	ESP	20,750	100	CYC or F/F	2,900	CYC or F/F	2,100	M/E	750	N/A	--	--
	2	HVAF	20,750	100	CYC or F/F	2,900	CYC or F/F	2,100	M/E	750	N/A	--	--
	2	A/B W/HR	20,750	1400	CYC or F/F	2,900	CYC or F/F	2,100	M/E	750	N/A	--	--
Large	1	ESP	30,900	100	CYC or F/F	2,900	CYC or F/F	2,100	M/E	900	A/B W/HR	7,000	1400
	1	HVAF	30,900	100	CYC or F/F	2,900	CYC or F/F	2,100	M/E	900	A/B W/HR	7,000	1400
	1	A/B W/HR	30,900	1400	CYC or F/F	2,900	CYC or F/F	2,100	M/E	900	A/B W/HR	7,000	1400
	2	ESP	30,900	100	CYC or F/F	2,900	CYC or F/F	2,100	M/E	900	N/A	--	--
	2	HVAF	30,900	100	CYC or F/F	2,900	CYC or F/F	2,100	M/E	900	N/A	--	--
	2	A/B W/HR	30,900	1400	CYC or F/F	2,900	CYC or F/F	2,100	M/E	900	N/A	--	--

[a] scfm = standard cubic feet per minute (70°F, 1 atmosphere).
[b] The ESP and HVAF are preceded by a water spray to cool the inlet air from 200°F to 100°F.
[c] The cyclone is used for Regulatory Alternatives 2 and 3 and the F/F for Alternatives 4 and 5.
[d] The control devices on the filler surge bin and storage and on the parting agent bin and storage operate at ambient temperature.
[e] The mist eliminator on the asphalt storage tanks operates at 130°F.
[f] The A/B W/HR operates at 900°F for Regulatory Alternatives 2 and 4 and operates at 1400°F for Alternatives 3 and 5.
[g] ESP = electrostatic precipitator.
[h] HVAF = high velocity air filter.
[j] A/B W/HR = afterburner with heat recovery.
[k] CYC = cyclone.
[l] F/F = fabric filter.
[m] M/E = mist eliminator.
[n] N/A = not applicable.
Configuration 1 is a plant with blowing stills, and Configuration 2 is a plant without blowing stills.

The specific pollution control devices and their operating characteristics shown in Tables 8-32 through 8-33a are discussed below for each operation.

8.2.2.1.1 Saturator, wet looper, and coater operation. The ESP, HVAF, or A/B W/HR in small plants operates at 4.93 Nm^3/s (10,450 scfm); the control devices in medium plants operate at 5.07 Nm^3/s (10,750 scfm) and 4.72 Nm^3/s (10,000 scfm), respectively; and the three control devices in large plants operate at 5.14 Nm^3/s (10,900 scfm), 4.72 Nm^3/s (10,000 scfm), and 4.72 Nm^3/s (10,000 scfm), respectively. Each ESP or HVAF baseline control device has an inlet gas temperature of 93°C (200°F), and each ESP or HVAF for Alternatives 2 through 5 has water sprays in the fume duct to reduce the inlet gas temperature from 93°C (200°F) to 38°C (100°F) to condense gaseous hydrocarbons. Each baseline (Alternative 1) afterburner with heat recovery has an operating temperature of 482°C (900°F), and each afterburner with heat recovery is operated at a higher temperature of 760°C (1400°F) for Alternatives 2 through 5.

8.2.2.1.2 Filler surge bin and storage operation. Each plant has cyclones for Alternatives 1, 2, and 3, and each plant has fabric filters for Alternatives 4 and 5. These devices operate at 0.33 Nm^3/s (700 scfm) and 0.71 Nm^3/s (1,500 scfm) in small plants; and 0.66 Nm^3/s 1,400 scfm) and 0.71 Nm^3/s (1,500 scfm) in medium and large plants. For the cost estimate, these have been combined to give devices with air flows of 1.04 Nm^3/s (2,200 scfm) in small plants and 1.37 Nm^3/s (2,900 scfm) in medium and large plants. They all have inlet gas streams at ambient temperatures.

8.2.2.1.3 Parting agent bin and storage operation. Each plant has two cyclones for Alternatives 1, 2, and 3, and each plant has fabric filters for Alternatives 4 and 5. Each of these devices operates at 0.33 Nm^3/s (700 scfm) in small plants and at 0.33 Nm^3/s (700 scfm) and 0.66 Nm^3/s (1,400 scfm) in medium and large plants. For the cost estimate, these devices were combined to yield a 0.66 Nm^3/s (1,400 scfm) in small plants and 0.99 Nm^3/s (2,100 scfm) in medium and large plants. They all have inlet gas streams at ambient temperatures.

8.2.2.1.4 Asphalt storage operation. The baseline (Alternative 1) plants have no controls on the asphalt storage operation. Each plant has

one mist eliminator on the asphalt storage operation for Alternatives 2 through 5. The small plants have a 0.21 Nm^3/s (450 scfm) unit, the medium have a 0.35 Nm^3/s (750 scfm) unit, and the large plants have a 0.425 Nm^3/s (900 scfm) unit. All mist eliminators have inlet gas stream temperatures of 54°C (130°F).

8.2.2.1.5 Blowing still operation. All plants with blowing stills (Configuration 1) are controlled by an A/B W/HR. The afterburner operates at 2.8 Nm^3/s (6,000 scfm) in small and medium plants and at 3.3 Nm^3/s (7,000 scfm) in large plants. Each A/B W/HR for Alternatives 1, 2, and 4 has an operating temperature of 482°C (900°F), and each A/B W/HR is operated at a higher temperature of 760°C (1400°F) for Alternatives 3 and 5. The afterburner operates 2,084 h/yr in small plants, 3,888 h/yr in medium plants, and 3,872 h/yr in large plants.

8.2.2.2 Description of the Individual Pollution Control Devices. All of the individual particulate pollution control devices used by the model asphalt roofing plants for the five regulatory alternatives were described in Chapter 4. A brief description of each device is given below. Supporting information and calculations are given in the reference.[39]

8.2.2.2.1 ESP. All ESP's are modular, low voltage, multiple-pass units equipped with a fan, liquid pump and piping, and stack. Each unit has an assumed drift velocity of 0.04 m/s (7 ft/min) and an assumed pressure drop of 500 Pa (2 in. of H_2O) for the ductwork and ESP system.

8.2.2.2.2 ESP with cooling systems. All ESP's with cooling systems are as previously described except that they now include a water pump, a recirculating water storage tank, water sprays installed in the fume duct to cool the fume, a sump for oil-water separation, and the associated piping.

8.2.2.2.3 HVAF. The HVAF units previously described in Chapter 4 are equipped with a glass fiber mat filter, fans and motors, a 20-ft stack, ductwork, and necessary controls. Each unit has an assumed pressure drop of 6,200 Pa (25 in. of H_2O) for the ductwork and filter system.[40] The assumed power requirements for each unit are 95 kW (127 hp), 100 kW (134 hp), 105 kW (141 hp), and 108 kW (144 hp), respectively.

8.2.2.2.4 HVAF with cooling systems. All HVAF's with cooling systems are the same as the HVAF's given above, with cooling systems identical in size and water flow to those for ESP's of the same size. The power requirements for the HVAF's with cooling systems are increased because of the water pump and are assumed to be: 97 kW (130 hp) for the 4.72 Nm^3/s (10,000 scfm) unit; 103 kW (138 hp) for the 4.93 Nm^3/s (10,450 scfm) unit; 108 kW (144 hp) for the 5.07 Nm^3/s (10,750 scfm) unit; and 111 kW (148 hp) for the 5.14 Nm^3/s (10,900 scfm) unit.

8.2.2.2.5 Afterburner with heat recovery. All afterburners are equipped with a counterflow shell and tube heat exchanger and are designed to operate at an incinerator outlet temperature of up to 815°C (1500°F) with a 0.3- to 0.5-second residence time. They are designed to operate on No. 2 fuel oil at an efficiency of 98 percent, and the heat exchanger recovers 50 percent of the heat. The pressure drop through the system is 2,000 Pa (8 in. of H_2O) for the ductwork, heat exchanger, and incinerator. The units all have an incinerator, burners, stack, controls, fan, fan motor, and necessary auxiliary equipment.[40] Each of the two smaller units has power requirements of 15 kW (20 hp) for the fan motor and fuel pump; and each of the three larger units has power requirements of 22.4 kW (30 hp) for the fan motor and fuel pump.

8.2.2.2.6 Cyclone. The cyclones are single-chamber units constructed of 10-gauge carbon steel and have a support, hopper, scroll, fan, fan motor, and ductwork as auxiliary equipment. The air flow through the units is 18.3 m/s (3,600 ft/min) and the pressure drop is about 500 Pa (2 in. of H_2O).[41] The power requirements for the fan motors are assumed to be 1.5 kW (2 hp) for the small unit; 2.2 kW (3 hp) for the next three units; and 15 kW (20 hp) for the two large units, respectively.

8.2.2.2.7 Mist eliminators. These units are fiber mist eliminators consisting of a packed bed of fibers retained between two concentric screens. Mist particles are collected on the fibers and become part of the liquid film which wets the fibers. The collected liquid drains down to the bottom of the unit and is recovered.[42] The pressure drop through each unit is about 2,500 Pa (10 in. of H_2O). The power requirements for the fan motor for each unit are 2.2 kW (3 hp) and 3 kW (4 hp) for the respective units.

8.2.2.2.8 Fabric filters. The fabric filters are constructed of carbon steel with dacron polyester bags. The collector has a pulse-jet type cleaning mechanism and a screw conveyor system. The fan is located at the outlet side of the unit so that the compartmented fabric filters operate at negative pressure. The maximum air-to-cloth ratio is 5.0, and the pressure drop is 2,500 Pa (10 in. of H_2O) through the system.[42] The power requirements for the fan motors are 3.7 kW (5 hp), 5.6 kW (7.5 hp), 5.6 kW (7.5 hp), and 7.5 kW (10 hp) for the respective units.

8.2.2.3 Annual Particulate Emissions From Model Asphalt Roofing Plants and the Control Systems. This section is concerned with the particulate emissions from five separate asphalt roofing plant operations: (1) the saturator, wet looper, and coater; (2) filler surge bin and storage silos; (3) parting agent bin and storage silos; (4) asphalt storage tanks; and (5) blowing stills. The uncontrolled emissions, emissions from installed control systems, and the quantities of particulate pollutants collected from each operation for each plant size and configuration for the five regulatory alternatives and for plants with no controls are discussed in this section. First, the quantities of particulates that would be emitted annually from model plants with no controls are determined. Next, the quantities of particulates that would be emitted annually from the various control devices and the efficiency of the devices are discussed. Then the quantities of particulate pollutants that are collected by each device and each system installed in each model plant size, with and without blowing stills, are given for each regulatory alternative. Finally, the efficiencies of the control devices are discussed.

8.2.2.3.1 Uncontrolled emissions. The uncontrolled emissions from each plant are derived from information contained in Chapter 3 and Chapter 6. The particulate loading of the exhaust gases from the hoods and ductwork on the filler surge bin and storage operations is calculated from data in Table 6-4 that show that the uncontrolled operation emits 5.13 kg/h (11.3 lb/h) at a small plant, which has an exhaust gas rate of 1.04 Nm^3/s (2,200 scfm), and the particulate loading from the parting agent bin and storage operation is assumed to be the same as from the filler operations. The particulate loading of the exhaust gases from the

asphalt storage operation is calculated from data in Table 6-4 that the uncontrolled operation emits 5.13 kg/h (11.3 lb/h) at a small plant which has an exhaust gas rate of 0.21 Nm^3/s (450 scfm). The calculations are shown below.

1. Filler and parting agent operations:

   Particulate loading = (5.13 kg/h)(h/60 min)(min/1.04 Nm^3) (1,000 g/kg) = 82.5 g/Nm^3 (0.60 gr/scf)

2. Asphalt storage operations:

   Particulate loading = (0.75 kg/h) (h/60 min)(min/0.21 Nm^3) (1,000 g/kg) = 59.4 g/Nm^3 (0.43 gr/scf)

Given the particulate loading, the annual uncontrolled emissions from each operation for each plant size can be calculated. The annual particulate emissions from the saturator and coater operation are taken from the emissions test data and calculated to model plant sizes.

Table 8-34 shows the annual uncontrolled particulate emissions from each operation for each size plant.

8.2.2.3.2 Emissions from baseline control systems. The quantities of particulates emitted from the control systems are taken in part from Table 6-4, which shows:

1. the ESP, HVAF, and A/B on the saturator, wet looper, and coater operation emit 16.67 kg/h (36.75 lb/h);

2. the A/B W/HR operating at 482°C (900°F) on the blowing stills emits 37.19 kg/h (82 lb/h) during the saturant blow and 45.76 kg/h (100.8 lb/h) during the coating blow; and

3. the cyclones on the material handling systems emit 0.54 kg/h (1.2 lb/h).

All the control devices on the small plant operate 4,000 h/yr, except the mist eliminator, which operates 4,800 h/yr, and the A/B W/HR on the blowing stills, which operates 2,000 h/yr. The plant produces 109,759 Mg (121,000 tons) of product each year. The test data indicate that the average control efficiency for all three control devices is 93.3 percent. Therefore, the emissions from the control devices can be

TABLE 8-34. UNCONTROLLED PARTICULATE EMISSIONS FROM EACH OPERATION AT THE MODEL ASPHALT ROOFING PLANTS ON AN ANNUAL BASIS

Plant operation	Uncontrolled emissions					
	Small plant		Medium plant		Large plant	
	Mg/yr	(tons/yr)	Mg/yr	(tons/yr)	Mg/yr	(tons/yr)
Saturator, wet looper, and coater	65.89	(72.63)	130.82	(144.22)	194.81	(214.77)
Filler surge bin and storage	20.53	(22.63)	27.06	(29.83)	27.06	(29.83)
Parting agent bin and storage	13.06	(14.40)	19.60	(21.60)	19.60	(21.60)
Asphalt storage tanks	3.59	(3.96)	6.02	(6.63)	6.00	(6.63)
Blowing stills	378.00	(417.00)	746.00	(822.40)	(944.00)	(1,041.00)
Totals	481.07	(530.62)	929.50	(1,024.68)	1,163.96	(1,283.56)

calculated in a manner similar to those shown below for the ESP with heat exchanger:

ESP with cooling system emissions = 65.89 (100-93.3) =
4.39 Mg/yr (4.84 tons/yr)

The annual control emissions calculated for each control device are shown in Table 8-35, which also shows the annual uncontrolled emissions for each operation and the amount of pollutants collected annually by each control device.

8.2.2.3.3 Pollutants collected. The amount of pollutants collected annually by each control device is shown in Table 8-35. The amount of pollutant was determined by subtracting the quantity of control emissions in Mg/yr (ton/yr) from the uncontrolled emissions in Mg/yr (ton/yr).

8.2.2.3.4 Control efficiencies. The control efficiencies for each type of device used on each operation are shown in Table 8-36. The test data showed that the average control efficiency for all three saturator control devices was between 92 and 94 percent. Cyclones have an efficiency of 80 percent, the fabric filters an assumed efficiency of 98.4 percent, and the mist eliminator efficiency is assumed to be 98.0 percent. The A/B W/HR system on the blowing stills has an efficiency of 77.7 percent at an operating temperature of 482°C (900°F) and an efficiency of 93.9 percent at an operating temperature of 760°C (1400°F).

8.2.2.4 Capital Investment Costs. The capital investment costs of the pollution control systems defined in the previous two sections are given for each model plant in Tables 8-37 to 8-39. The costs given in these tables include the cost of purchasing and installing the control equipment, auxiliary equipment, foundations and supports, ductwork, stacks, electrical systems, piping, insulation, painting, instrumentation, indirect costs such as engineering and construction overhead, contractor's fees, and contingencies. All costs are for new equipment installed at the time the plant is built and are given in November 1978 dollars.

The capital investment costs estimated in this analysis are based upon limited specifications for the equipment since no detailed specifications are available. All costs are derived from previous estimates reported in the literature and have been updated for inflation using the Chemical Engineering (CE) fabricated equipment cost index. Since the

TABLE 8-35. UNCONTROLLED PARTICULATE EMISSIONS, CONTROL EMISSIONS, AND PARTICULATE POLLUTANTS COLLECTED FOR EACH MODEL ASPHALT ROOFING PLANT OPERATION AND POLLUTION CONTROL DEVICE

Plant operation and size	Description of control system					Uncontrolled emissions		Control emissions		Pollutants collected	
	Device(s)	Nm^3/s	(scfm)	°C	(°F)	Mg/yr	(tons/yr)	Mg/yr	(tons/yr)	Mg/yr	(tons/yr)
Saturator, wet looper, and coater											
Small	ESP/HE[a]	4.93	(10,450)	38	(100)	65.89	(72.63)	4.39	(4.84)	61.50	(67.79)
	HVAF/HE[b]	4.93	(10,450)	38	(100)	65.89	(72.63)	4.39	(4.84)	61.50	(67.79)
	A/B W/HR[c]	4.93	(10,450)	760	(1400)	65.89	(72.63)	4.39	(4.84)	61.50	(67.79)
Medium	ESP/HE	9.79	(20,750)	38	(100)	130.82	(144.22)	8.78	(9.68)	122.04	(134.54)
	HVAF/HE	9.79	(20,750)	38	(100)	130.82	(144.22)	8.78	(9.68)	122.04	(134.54)
	A/B W/HR	9.79	(20,750)	760	(1400)	130.82	(144.22)	8.78	(9.68)	122.04	(134.54)
Large	ESP/HE	14.58	(30,900)	38	(100)	194.82	(214.77)	11.25	(12.40)	183.57	(202.37)
	HVAF/HE	14.58	(30,900)	38	(100)	194.82	(214.77)	11.25	(12.40)	183.57	(202.37)
	A/B W/HR	14.58	(30,900)	760	(1400)	194.82	(214.77)	11.25	(12.40)	183.57	(202.37)
Filler surge bin and storage											
Small	CYC[d]	1.04	(2,200)	Ambient		20.53	(22.63)	4.10	(4.52)	16.43	(18.11)
	F/F[e]	1.04	(2,200)	Ambient		20.53	(22.63)	0.33	(0.36)	20.20	(22.27)
Medium and Large	CYC	1.37	(2,900)	Ambient		27.06	(29.83)	5.41	(5.96)	21.65	(23.87)
	F/F	1.37	(2,900)	Ambient		27.06	(29.83)	0.44	(0.48)	26.63	(29.35)
Parting agent bin and storage											
Small	CYC	0.66	(1,400)	Ambient		13.06	(14.40)	2.61	(2.88)	10.45	(11.52)
	F/F	0.66	(1,400)	Ambient		13.06	(14.40)	0.21	(0.23)	12.85	(14.17)
Medium Large	CYC	0.99	(2,100)	Ambient		19.60	(21.60)	3.97	(4.38)	15.62	(17.22)
	F/F	0.99	(2,100)	Ambient		19.60	(21.60)	0.32	(0.35)	19.28	(21.25)
Asphalt storage											
Small	M/E[f]	0.21	(450)	54	(130)	3.59	(3.96)	0.07	(0.08)	3.52	(3.88)
Medium	M/E	0.35	(750)	54	(130)	6.02	(6.63)	0.12	(0.13)	5.90	(6.50)
Large	M/E	0.425	(900)	54	(130)	7.04	(7.76)	0.14	(0.15)	6.90	(7.61)

TABLE 8-35. UNCONTROLLED PARTICULATE EMISSIONS, CONTROL EMISSIONS, AND PARTICULATE POLLUTANTS COLLECTED FOR EACH MODEL ASPHALT ROOFING PLANT OPERATION AND POLLUTION CONTROL DEVICE (concluded)

Plant operation and size	Description of control system					Uncontrolled emissions		Control emissions		Pollutants collected	
	Device(s)	Nm^3/s	(scfm)	°C	(°F)	Mg/yr	(tons/yr)	Mg/yr	(tons/yr)	Mg/yr	(tons/yr)
Blowing stills											
Small	A/B W/HR	2.83	(6,000)	482	(900)	378	(417)	84.3	(92.99)	293.7	(324.0)
	A/B W/HR	2.83	(6,000)	760	(1400)	378	(417)	22.7	(25.5)	355.3	(391.5)
Medium	A/B W/HR	2.83	(6,000)	482	(900)	746	(822.4)	133.2	(146.8)	612.8	(675.6)
	A/B W/HR	2.83	(6,000)	760	(1400)	746	(822.4)	46.6	(51.3)	699.4	(771.1)
Large	A/B W/HR	3.30	(7,000)	482	(900)	944	(1,041)	210.5	(232.2)	733.8	(808.9)
	A/B W/HR	3.30	(7,000)	760	(1400)	944	(1,041)	58	(64)	886.0	(977.0)

[a]ESP = electrostatic precipitator.
[b]ESP/HE = electrostatic precipitator with cooling system.
[c]HVAF = high velocity air filter.
[d]HVAF/HE = high velocity air filter with cooling system.
[e]A/B W/HR = afterburner with heat recovery.
[f]CYC = cyclone.
[g]F/F = fabric filter.
[h]M/E = mist eliminator.

TABLE 8-36. CONTROL EFFICIENCIES OF THE POLLUTION CONTROL DEVICES USED IN THE MODEL ASPHALT ROOFING PLANTS

Plant operation	Description of control device					Uncontrolled emissions		Pollutants collected		Coll. eff.
	Device	Nm^3/sec	(scfm)	°C	(°F)	Mg/yr	(tons/yr)	Mg/yr	(tons/yr)	%
Saturator wet looper, and coater	ESP/HE[a]	4.72	(10,000)	38	(100)	63.05	(69.50)	58.85	(64.87)	93.3
	HVAF[b]	4.72	(10,000)	38	(100)	63.05	(69.50)	58.85	(64.87)	93.3
	A/B W/HR[c]	4.72	(10,000)	760	(1400)	63.05	(69.50)	58.85	(64.87)	93.3
Filler surge bin and storage	CYC[d]	1.04	(2,200)	ambient		20.53	(22.63)	16.43	(18.11)	80.0
	F/F[e]	1.04	(2,200)	ambient		20.53	(22.63)	20.20	(22.27)	98.4
Parting agent bin and storage	CYC	0.66	(1,400)	ambient		13.06	(14.40)	10.45	(11.52)	80.0
	F/F	0.66	(1,400)	ambient		13.06	(14.40)	12.85	(14.17)	98.4
Asphalt storage	M/E	0.21	(450)	54	(130)	3.59	(3.96)	3.41	(3.76)	98.0
Blowing stills	A/B W/HR	2.83	(6,000)	482	(900)	378	(417)	293.7	(324)	77.7
	A/B W/HR	2.83	(6,000)	760	(1400)	378	(417)	355.3	(391.5)	93.9

[a]ESP/HE = electrostatic precipitator with cooling system.
[b]HVAF/HE = high velocity air filter with cooling system.
[c]A/B W/HR = afterburner with heat recovery.
[d]CYC = cyclone.
[e]F/F = fabric filter.

TABLE 8-37. CAPITAL INVESTMENT COSTS OF POLLUTION CONTROL SYSTEMS FOR THE BASELINE MODEL ASPHALT ROOFING PLANTS

		Capital investment costs (November 1978 dollars)						
Plant size	Plant configuration	Saturator, wet looper and coater Device(s)	Saturator, wet looper and coater Cost($)	Filler surge bin and storage CYC[d]	Parting agent bin and storage CYC	Asphalt storage	Blowing stills A/B W/HR	Total capital cost
Small	1	ESP[a]	253,000	12,900	8,600	None	121,000	395,500
	1	HVAF[b]	225,000	12,900	8,600	None	121,000	367,500
	1	A/B W/HR[c]	210,000	12,900	8,600	None	121,000	352,500
	2	ESP	253,000	12,900	8,600	None	N/A[e]	274,500
	2	HVAF	225,000	12,900	8,600	None	N/A	246,500
	2	A/B W/HR	210,000	12,900	8,600	None	N/A	231,500
Medium	1	ESP	506,000	17,200	12,500	None	121,000	656,700
	1	HVAF	446,000	17,200	12,500	None	121,000	596,700
	1	A/B W/HR	417,000	17,200	12,500	None	121,000	567,700
	2	ESP	506,000	17,200	12,500	None	N/A	535,700
	2	HVAF	446,000	17,200	12,500	None	N/A	445,700
	2	A/B W/HR	417,000	17,200	12,500	None	N/A	446,700
Large	1	ESP	757,000	17,200	12,500	None	141,000	957,700
	1	HVAF	661,000	17,200	12,500	None	141,000	831,700
	1	A/B W/HR	620,000	17,200	12,500	None	141,000	790,700
	2	ESP	757,000	17,200	12,500	None	N/A	786,700
	2	HVAF	661,000	17,200	12,500	None	N/A	690,700
	2	A/B W/HR	620,000	17,200	12,500	None	N/A	649,700

[a]ESP = electrostatic precipitator.
[b]HVAF = high velocity air filter.
[c]A/B W/HR = afterburner with heat recovery.
[d]CYC = cyclone.
[e]N/A = not applicable.

TABLE 8-38. CAPITAL INVESTMENT COSTS OF POLLUTION CONTROL SYSTEMS FOR MODEL ASPHALT ROOFING PLANTS FOR REGULATORY ALTERNATIVES 2 AND 3

		Capital investment costs (November 1978 dollars)						
Plant size	Plant configuration	Saturator, wet looper and coater Device(s)	Saturator, wet looper and coater Cost($)	Filler surge bin and storage CYC[d]	Parting agent bin and storage CYC	Asphalt storage M/E[e]	Blowing stills A/B W/HR	Total capital cost
Small	1	ESP[a]	274,200	12,900	8,600	19,700	121,000	436,400
	1	HVAF[b]	246,200	12,900	8,600	19,700	121,000	408,400
	1	A/B W/HR[c]	210,000	12,900	8,600	19,700	121,000	372,200
	2	ESP	274,200	12,900	8,600	19,700	N/A[f]	315,400
	2	HVAF	246,200	12,900	8,600	19,700	N/A	287,400
	2	A/B W/HR	210,000	12,900	8,600	19,700	N/A	251,200
Medium	1	ESP	548,100	17,200	12,500	29,400	121,000	728,200
	1	HVAF	488,100	17,200	12,500	29,400	121,000	668,200
	1	A/B W/HR	417,000	17,200	12,500	29,400	121,000	597,100
	2	ESP	548,100	17,200	12,500	29,400	N/A	607,200
	2	HVAF	488,100	17,200	12,500	29,400	N/A	547,200
	2	A/B W/HR	417,000	17,200	12,500	29,400	N/A	476,100
Large	1	ESP	819,600	17,200	12,500	29,400	141,000	1,019,700
	1	HVAF	723,600	17,200	12,500	29,400	141,000	923,700
	1	A/B W/HR	620,000	17,200	12,500	29,400	141,000	820,100
	2	ESP	819,600	17,200	12,500	29,400	N/A	878,700
	2	HVAF	723,600	17,200	12,500	29,400	N/A	782,700
	2	A/B W/HR	620,000	17,200	12,500	29,400	N/A	679,100

[a]ESP = electrostatic precipitator with cooling system.
[b]HVAF = high velocity air filter with cooling system.
[c]A/B W/HR = afterburner with heat recovery.
[d]CYC = cyclone.
[e]M/E = mist eliminator.
[f]N/A = not applicable.

TABLE 8-39. CAPITAL INVESTMENT COSTS OF POLLUTION CONTROL SYSTEMS FOR MODEL ASPHALT ROOFING PLANTS FOR REGULATORY ALTERNATIVES 4 AND 5

Plant size	Plant configuration	Capital investment costs (November 1978 dollars): Saturator, wet looper and coater: Device(s)	Saturator, wet looper and coater: Cost($)	Filler surge bin and storage F/F[d]	Parting agent bin and storage F/F	Asphalt storage M/E[e]	Blowing stills A/B W/HR	Total capital cost
Small	1	ESP[a]	274,200	28,500	23,400	19,700	121,000	466,800
	1	HVAF[b]	246,200	28,500	23,400	19,700	121,000	438,800
	1	A/B W/HR[c]	210,000	28,500	23,400	19,700	121,000	402,600
	2	ESP	274,200	28,500	23,400	19,700	N/A[f]	345,800
	2	HVAF	246,200	28,500	23,400	19,700	N/A	317,800
	2	A/B W/HR	210,000	28,500	23,400	19,700	N/A	281,600
Medium	1	ESP	548,100	32,000	27,900	29,400	121,000	758,400
	1	HVAF	488,100	32,000	27,900	29,400	121,000	698,400
	1	A/B W/HR	417,000	32,000	27,900	29,400	121,000	627,300
	2	ESP	548,100	32,000	27,900	29,400	N/A	637,400
	2	HVAF	488,100	32,000	27,900	29,400	N/A	577,400
	2	A/B W/HR	417,000	32,000	27,900	29,400	N/A	506,300
Large	1	ESP	819,600	32,000	27,900	29,400	141,000	1,049,900
	1	HVAF	723,600	32,000	27,900	29,400	141,000	953,900
	1	A/B W/HR	620,000	32,000	27,900	29,400	141,000	850,300
	2	ESP	819,600	32,000	27,900	29,400	N/A	908,900
	2	HVAF	723,600	32,000	27,900	29,400	N/A	812,900
	2	A/B W/HR	620,000	32,000	27,900	29,400	N/A	709,300

[a]ESP = electrostatic precipitator with cooling system.
[b]HVAF = high velocity air filter with cooling system.
[c]A/B W/HR = afterburner with heat recovery.
[d]F/F = fabric filter.
[e]M/E = mist eliminator.
[f]N/A = not applicable.

pollution control equipment is not defined by detailed specifications and since the costs are adjusted for inflation with a broad index, the probable accuracy of the estimated costs is ±30 percent.

The total capital investment costs shown in the tables were derived by determining the costs of individual control systems for each operation. The methods and assumptions used to arrive at these costs are discussed below.

8.2.2.4.1 ESP. The cost (in December 1975 dollars) of an uninstalled ESP without auxiliary equipment can be estimated from the following equation:

Purchase cost = \$75,000 + \$27.56 (net plate area, m^2), or

Purchase cost = \$75,000 + \$2.56 (net plate area, ft^2).[41]

The cost of auxiliary equipment, including fans, damper, ductwork, fan motor, and miscellaneous items, adds about 20 percent to the basic ESP cost.[40,41] Installation costs vary between 50 percent and 150 percent of the basic ESP and auxiliary equipment cost; in this analysis an installation cost of 75 percent is assumed.[40,41]

The cost of the ESP system must be adjusted from December 1975 dollars to November 1978 dollars. This is done by using the CE fabricated equipment cost index, which rose from 196.4 in December 1975 to 244.1 in November 1978.[41,43]

The installed capital equipment cost (C) for each ESP system (in November 1978 dollars rounded to the nearest \$1,000) is:

1. 4.72 Nm^3/s (10,000 scfm) ESP system:

   C = [\$75,000+(\$2.56)(8,200)](1.2)(1.75)(244.1/196.4) = \$251,000

2. 4.93 Nm^3/s (10,450 scfm) ESP system:

   C = [\$75,000+(\$2.56)(8,500)](1.2)(1.75)(244.1/196.4) = \$253,000

3. 5.07 Nm^3/s (10,750 scfm) ESP system:

   C = [\$75,000+(\$2.56)(8,800)](1.2)(1.75)(244.1/196.4) = \$255,000

4. 5.14 Nm^3/s (10,900 scfm) ESP system:

   C = [\$75,000+(\$2.56)(9,000)](1.2)(1.75)(244.1/196.4) = \$256,000

8.2.2.4.2 ESP with cooling systems. The cost of an ESP with a cooling system increases the above ESP system costs by the cost of the cooling system. The installed cost of a cooling system, including the purchase cost, handling and setting, steel, concrete, electrical, piping,

paint, insulation, and indirect costs, was obtained from suppliers of this equipment. The updated costs (rounded to the nearest $1,000) for cooling systems (HE) for each unit are:[40,43,44]

1. 4.72 Nm^3/s (10,000 scfm) ESP system:
   Cooling system installed cost = $20,300
2. 4.93 Nm^3/s (10,450 scfm) ESP system:
   Cooling system installed cost = $21,200
3. 5.07 Nm^3/s (10,750 scfm) ESP system:
   Cooling system installed cost = $21,800
4. 5.14 Nm^3/s (10,900 scfm) ESP system:
   Cooling system installed cost = $22,000

The total installed capital investment cost for ESP's with cooling systems is $271,300, $274,200, $276,800 and $278,000 for the respective systems.

8.2.2.4.3 HVAF. The installed cost of an HVAF system, including the purchase cost of the HVAF and auxiliary equipment, installation, engineering, foundations, ductwork, stack, electrical, insulation, painting, piping, and indirect costs, is taken from Air Pollution Control Technology and Costs: Seven Selected Emission Sources.[40] The approximate cost (in 1974 dollars) of the HVAF systems is $45,500/$Nm^3/s$ ($15/scfm) for systems in the size range of 4.72 to 5.04 Nm^3/s (10,000 to 10,900 scfm).

The 1974 cost is adjusted to November 1978 dollars with the CE fabricated equipment cost index, which rose from 170.1 in 1974 to 244.1 in November 1978.[41,43] Thus, the capital investment cost (C) of the HVAF systems (rounded to the nearest $1,000) is:

1. 4.72 Nm^3/s (10,000 scfm) HVAF system:
   C = ($15)(10,000)(244.1/170.1) = $215,000
2. 4.93 Nm^3/s (10,450 scfm) HVAF system:
   C = ($15)(10,450)(244.1/170.1) = $225,000
3. 5.07 Nm^3/s (10,750 scfm) HVAF system:
   C = ($15)(10,750)(244.1/170.1) = $231,000
4. 5.14 Nm^3/s (10,900 scfm) HVAF system:
   C = ($15)(10,900)(244.1/170.1) = $235,000

8.2.2.4.4 HVAF with cooling system. The cost of an HVAF with a direct water spray cooling system increases the HVAF system costs shown

above by the cost of the cooling system, and their costs are identical to those used on the ESP's. The capital investment cost (C) of each HVAF with cooling system (rounded to the nearest $1,000) is:

1. 4.72 Nm^3/s (10,000 scfm) HVAF with cooling system:
   C = $215,000 + $20,300 = $235,300
2. 4.93 Nm^3/s (10,450 scfm) HVAF with cooling system:
   C = $225,000 + $21,200 = $246,200
3. 5.07 Nm^3/s (10,750 scfm) HVAF with cooling system:
   C = $231,000 + $21,800 = $252,800
4. 5.14 Nm^3/s (10,900 scfm) HVAF with cooling system:
   C = $235,000 + $22,000 = $257,000

8.2.2.4.5 Afterburner with heat recovery. The cost of an A/B W/HR is taken from Air Pollution Control Technology and Costs: Seven Selected Emission Sources and Capital and Operating Costs of Selected Air Pollution Control Systems.[40,41] The capital investment costs of the A/B W/HR and auxiliary equipment is about $17,000/$Nm^3/s$ ($8/scfm) in 1974 dollars.[40] Installation, ductwork, piping, electrical, insulation, painting, supports, foundation, stack, and indirect costs range between 25 percent and 100 percent of the basic equipment cost and are assumed to be 75 percent in this analysis.[41]

The cost of the A/B W/HR system must be adjusted from 1974 dollars to November 1978 dollars. This is done by using the CE fabricated equipment cost index, which rose from 170.1 in 1974 to 244.1 in November 1978.[41,43]

The installed capital cost (C) of each A/B W/HR system (in November 1978 dollars rounded to the nearest $1,000) is:

1. 2.83 Nm^3/s (6,000 scfm) A/B W/HR:
   C = ($8)(6,000)(1.75)(244.1/170.1) = $121,000
2. 3.30 Nm^3/s (7,000 scfm) A/B W/HR:
   C = ($8)(7,000)(1.75)(244.1/170.1) = $141,000
3. 4.72 Nm^3/s (10,000 scfm) A/B W/HR:
   C = ($8)(10,000)(1.75)(244.1/170.1) = $201,000
4. 4.93 Nm^3/s (10,450 scfm) A/B W/HR:
   C = ($8)(10,450)(1.75)(244.1/170.1) = $210,000
5. 5.07 Nm^3/s (10,750 scfm) A/B W/HR:
   C = ($8)(10,750)(1.75)(244.1/170.1) = $216,000

6. 5.14 Nm^3/s (10,900 scfm) A/B W/HR:

$C = (\$8)(10,900)(1.75)(244.1/170.1) = \$218,000$

8.2.2.4.6 Cyclones. The capital investment cost of cyclones is taken from Capital and Operating Costs of Pollution Control Equipment Modules - Vol. II - Data Manual and Capital and Operating Costs of Selected Air Pollution Control Systems.[41,44] The 1972 installed capital investment cost of each system, including purchase cost of cyclone and auxiliary equipment, installation, ductwork, piping, supports, instrumentation, electrical, insulation, paint, and indirect costs, is: $4,800 for the 0.66 Nm^3/s (1,400 scfm) system; $7,000 for the 0.99 Nm^3/s (2,100 scfm) system; $7,200 for the 1.04 Nm^3/s (2,200 scfm) system; and $9,600 for the 1.37 Nm^3/s (2,900 scfm) system.[44] These costs (adjusted for inflation) agree with those given in Capital and Operating Costs of Selected Air Pollution Control Systems.[41]

The capital investment cost (C) of each system (rounded to the nearest $100) adjusted from 1972 dollars to November 1978 dollars with the CE fabricated equipment cost index is:

1. 0.66 Nm^3/s (1,400 scfm) cyclone:

   $C = (\$4,800)(244.1/136.3) = \$8,600$

2. 0.99 Nm^3/s (2,100 scfm) cyclone:

   $C = (\$7,000)(1.79) = \$12,500$

3. 1.04 Nm^3/s (2,200 scfm) cyclone:

   $C = (\$7,200)(1.79) = \$12,900$

4. 1.37 Nm^3/s (2,900 scfm) cyclone:

   $C = (\$9,600)(1.79) = \$17,200$

8.2.2.4.7 Mist eliminators. The capital investment cost of mist eliminators is taken from a 1977 EPA report.[45] The estimated capital investment cost for each system, in May 1977 dollars, is: $17,100 for the 0.21 Nm^3/s (450 scfm) system; $25,500 for the 0.35 Nm^3/s (750 scfm) system; and $30,600 for the 0.425 Nm^3/s (900 scfm) system.

These capital investment costs are adjusted using the CE fabricated equipment cost index, which rose from 211.9 in May 1977 to 244.1 in November 1978, or about 15.2 percent.[43,46]

The capital investment cost (C) of the mist eliminator system is:

1. 0.21 Nm^3/s (450 scfm) M/E:

   C = ($17,100)(1.152) = $19,700

2. 0.35 Nm^3/s (750 scfm) M/E:

   C = ($25,500)(1.152) = $29,400

3. 0.425 Nm^3/s (900 scfm) M/E:

   C = ($30,600)(1.152) = $35,300

8.2.2.4.8 Fabric filters. The capital investment cost of fabric filter systems is taken from Non-metallic Minerals Industries Control Equipment Costs.[47] The capital investment cost of fabric filter systems (in December 1976 dollars) including the collector, auxiliaries, installation, foundation, stack, piping, ductwork, insulation, painting, electrical, and indirect costs is: $20,000 for the 0.66 Nm^3/s (1,400 scfm) system; $23,800 for the 0.99 Nm^3/s (2,100 scfm) system; $24,300 for the 1.04 Nm^3/s (2,200 scfm) system; and $27,300 for the 1.37 Nm^3/s (2,900 scfm) system.

The costs are adjusted from December 1976 dollars to November 1978 dollars with the CE fabricated equipment cost index, which rose from 208.3 in December 1976 to 244.1 in November 1978, or about 17.2 percent.[43,48] The November 1978 capital investment cost (C) of each fabric filter system (rounded to the nearest $100) is:

1. 0.66 Nm^3/s (1,400 scfm) fabric filter:

   C = ($20,000)(1.172) = $23,400

2. 0.99 Nm^3/s (2,100 scfm) fabric filter:

   C = ($23,800)(1.172) = $27,900

3. 1.04 Nm^3/s (2,200 scfm) fabric filter:

   C = ($24,300)(1.172) = $28,500

4. 1.37 Nm^3/s (2,900 scfm) fabric filter:

   C = ($27,300)(1.172) = $32,000

8.2.2.5 Capital cost increase from baseline. The capital cost increase from the baseline for control systems for Alternatives 2 to 5 at a given plant, with or without blowing stills, is given in Table 8-40. For a small plant with an ESP or HVAF, the capital cost increase of the pollution control system is $40,900 for Alternatives 2 and 3 and $71,300 for Alternatives 4 and 5; for a medium plant, the capital cost increase

TABLE 8-40. CAPITAL COST INCREASE FROM BASELINE FOR POLLUTION CONTROL SYSTEMS

Plant size	Saturator control device	Regulatory alternatives 2 and 3	Regulatory alternatives 4 and 5
Small	ESP[a] or HVAF[b]	40,900	71,300
	A/B W/HR[c]	19,700	50,100
Medium	ESP or HVAF	71,500	101,700
	A/B W/HR	29,400	59,600
Large	ESP or HVAF	97,900	128,100
	A/B W/HR	35,300	65,500

[a]ESP = electrostatic precipitator with cooling system.
[b]HVAF = high velocity air filter with cooling system.
[c]A/B W/HR = afterburner with heat recovery.

is $71,500 for Alternatives 2 and 3 and $101,700 for Alternatives 4 and 5; and for a large plant, the capital cost increase is $97,900 for Alternatives 2 and 3 and $128,100 for Alternatives 4 and 5. When an A/B W/HR is used to control the saturator, wet looper, and coater, the capital cost increase for a small plant is $19,700 for Alternatives 2 and 3 and $50,100 for Alternatives 4 and 5; for a medium plant, the capital cost increase is $29,400 for Alternatives 2 and 3 and $59,600 for Alternatives 4 and 5; for a large plant, the increase is $35,300 for Alternatives 2 and 3 and $65,500 for Alternatives 4 and 5.

8.2.2.6 Annualized Cost. The annualized costs for the pollution control systems are the sum of variable costs and fixed costs. Variable costs include operating labor, supervision, maintenance labor, payroll charges, maintenance and repair materials, and process utilities. Fixed costs include capital recovery, taxes, insurance, and general and administrative expenses.

Table 8-41 shows the total annualized cost for each pollution control system for each plant size and configuration for the five regulatory alternatives.

The inputs used to determine the annualized cost of the control systems are discussed below.

8.2.2.6.1 Variable costs. The variable costs include labor and supervision, maintenance and repair materials, and process utilities.

Each pollution control device requires an operator to periodically check the instruments, controls, and the unit for proper operation, and requires maintenance labor to maintain and service the equipment. The increase from baseline in the amount of time required to operate and maintain the control devices and the associated labor and supervision costs are shown in Table 8-42.

The amount of operating labor required for each device is based on the assumptions that the ESP, HVAF, cyclone, mist eliminator, and fabric filter require 0.5 hour of operating labor per day (0.25 h/shift), and that the afterburner with heat recovery system requires 2 hours of operating labor per day (1 h/shift). The amount of maintenance labor required for each device is based on the assumptions that the ESP, HVAF, afterburner with heat recovery, mist eliminator, fabric filter, and heat

TABLE 8-41. TOTAL ANNUALIZED COST OF POLLUTION CONTROL SYSTEMS FOR MODEL ASPHALT ROOFING PLANTS FOR THE FIVE REGULATORY ALTERNATIVES WITH RECOVERY CREDITS

Plant size	Plant configuration	Saturator control device	Total annualized cost of pollution[a] control systems (November 1978 dollars)				
			Alternative 1	Alternative 2	Alternative 3	Alternative 4	Alternative 5
Small	1	ESP[c]	89,800	100,700	108,700	108,900	116,900
	1	HVAF[d]	96,500	107,600	115,600	115,800	123,800
	1	A/B W/HR[e]	162,000	204,400	212,400	212,900	220,900
	2	ESP	62,900	73,800	73,800	82,400	82,400
	2	HVAF	69,600	80,700	80,700	89,300	89,300
	2	A/B W/HR	135,100	177,500	177,500	186,400	186,400
Medium	1	ESP	135,700	135,900	141,900	144,000	150,000
	1	HVAF	148,400	148,700	154,700	156,800	162,800
	1	A/B W/HR	274,400	341,200	347,200	348,300	355,300
	2	ESP	114,400	135,400	135,400	143,500	143,500
	2	HVAF	127,100	148,200	148,200	156,300	156,300
	2	A/B W/HR	253,100	340,700	340,700	348,800	348,800
Large	1	ESP	183,900	214,000	232,000	222,100	240,100
	1	HVAF	202,700	232,300	250,300	240,400	258,400
	1	A/B W/HR	388,000	518,900	537,400	527,000	545,000
	2	ESP	163,600	193,700	193,700	201,800	201,800
	2	HVAF	182,400	212,000	212,000	221,100	221,100
	2	A/B W/HR	367,700	498,600	498,600	506,700	506,700

[a]All costs are rounded to the nearest $100.
[b]The ESP and HVAF have cooling systems in Regulatory Alternatives 2 through 5.
[c]ESP = electrostatic precipitator.
[d]HVAF = high velocity air filter.
[e]A/B W/HR = afterburner with heat recovery.

TABLE 8-42. ANNUAL LABOR AND SUPERVISION COST INCREASE FROM BASELINE FOR MODEL ASPHALT ROOFING PLANT POLLUTION CONTROL DEVICES

Pollution control system	Annual operating labor		Supervision	Maintenance labor		Payroll charges	Total labor and supervision cost
	h	$	$	h	$	$	$
ESP W/HE[c]	--	--	--	200	1,500	300	1,800
HVAF/W/HE[c]	--	--	--	200	1,500	300	1,800
M/E[d]	125	860	90	200	1,500	490	2,900
F/F[c]	--	--	--	200	750	150	900

[a]Wages of operating labor are $6.86/h; wages of maintenance labor are $7.50/h; supervision cost is 10 percent of operating labor; and payroll charges are 20 percent of all operating labor, maintenance labor, and supervision costs.
[b]Rounded to the nearest $100.
[c]Based on 4,000 h/yr operation.
[d]Based on 4,800 h/yr operation.

exchanger systems require 4 hours maintenance per week, and the cyclones require 2 hours maintenance per week. These assumptions are based on information given in Air Pollution Control Technology and Costs: Seven Selected Emission Sources.[40]

The costs shown in Table 8-42 are based on operating labor wages of $6.86/h and maintenance labor wages of $7.50/h.[33] Supervision costs are 10 percent of operating labor, and payroll charges are 20 percent of the sum of operating labor, supervision, and maintenance labor wages.

The annual cost of maintenance and repair materials, operating supplies, and replacement parts is estimated to be 3 percent of the total capital investment cost of the ESP, HVAF, and afterburner with heat recovery systems and 5 percent of the cyclone, mist eliminator, and fabric filter systems.[40,44]

Tables 8-43 and 8-43a show the annual process utility requirements and utility costs for each pollution control device used in the model asphalt roofing plants. The utility requirements are calculated from the information given in Section 8.2.2.2 for each device. The annual utility costs are based on a cost of $0.106/m^3 ($0.30/100 ft^3) for water; $137.40/m^3 ($0.52/gal) for No. 2 fuel oil; and $11.39/gigajoules* ($0.041/kWh) for electricity.[34-36]

The fuel requirements for the afterburners with heat recovery are not reduced for the heating value of the hydrocarbons in the gas stream. This is considered a recovery credit and is discussed in Section 8.2.2.6.3.

8.2.2.6.2 Fixed costs. Fixed costs include capital recovery, taxes, insurance, and general and administrative cost for each system.

The total capital investment cost of each system is recovered over its depreciable life, which is assumed to be 20 years for each control device. (This assumption is generally valid for all devices except the afterburner with heat recovery, which has a life of about 10 years. To simplify calculations, a 20-year life is assumed for all the devices.) Interest is assumed to be 10 percent. Therefore, the capital recovery

---

*Gigajoule is a billion joules.

TABLE 8-43. ANNUAL UTILITY REQUIREMENTS AND COST INCREASE FROM BASELINE FOR INDIVIDUAL POLLUTION CONTROL DEVICES USED IN MODEL ASPHALT ROOFING PLANTS (METRIC)

Control device	Operating characteristics		Annual utility requirements and costs (November 1978 dollars)						
			Water		No. 2 fuel oil		Electricity		Total annual cost ($)
	Nm^3/s	°C	$m^3 x10$	Cost ($)	m^3	Cost ($)	Joules$x10^9$	Cost ($)	
ESP/HE[a] or HVAF/HE[b]	4.72	38	2.8	300	--	--	35	1,400	1,700
	4.93	38	3.4	400	--	--	35	1,400	1,800
	5.07	38	3.7	400	--	--	35	1,400	1,800
	5.14	38	4.0	400	--	--	35	1,400	1,800
A/B W/HR[c]	2.83	760	--	--	95	13,100	--	--	13,100
	3.30	760	--	--	222	30,500	--	--	30,500
	4.72	760	--	--	310	42,600	--	--	42,600
	4.93	760	--	--	323	44,300	--	--	44,300
	5.07	760	--	--	334	45,700	--	--	45,700
	5.14	760	--	--	342	46,300	--	--	46,300
F/F[d]	0.66	amb	--	--	--	--	32	200	200
	0.99	amb	--	--	--	--	37	500	500
	1.04	amb	--	--	--	--	37	500	500
	1.37	amb	--	--	--	--	76	800	800
M/E[e]	0.21	54	--	--	--	--	40	500	500
	0.35	54	--	--	--	--	50	600	600
	0.425	54	--	--	--	--	60	700	700

All annual utility requirements are based on 4,000 h/yr operation, except the 2.83 Nm^3/s A/B W/HR, which operates 2,000 h/yr, and the M/E's, which operate 4,800 h/yr.
Costs are based on water, $0.106/$m^3$; No. 2 fuel oil, $137.40/$m^3$; and electricity, $11.39/joules x 10^9.
All costs are rounded to the nearest $100.
[a]ESP/HE = electrostatic precipitator with cooling system.
[b]HVAF/HE = high velocity air filter with cooling system.
[c]A/B W/HR = afterburner with heat recovery.
[d]F/F = fabric filter.
[e]M/E = mist eliminator.

TABLE 8-43a. ANNUAL UTILITY REQUIREMENTS AND COST INCREASE FROM BASELINE FOR INDIVIDUAL POLLUTION CONTROL DEVICES USED IN MODEL ASPHALT ROOFING PLANTS (ENGLISH)

Control device	Operating characteristics		Annual utility requirements and costs (November 1978 dollars)						
			Water		No. 2 fuel oil		Electricity		Total annual cost($)
	scfm	°F	$ft^3 x 10^3$	Cost($)	$gal x 10^3$	Cost($)	$kWh x 10^3$	Cost($)	
ESP/HE[a] or HVAF/HE[b]	10,000	100	100	300	--	--	35	1,400	1,700
	10,450	100	120	400	--	--	35	1,400	1,800
	10,750	100	130	400	--	--	35	1,400	1,800
	10,900	100	140	400	--	--	35	1,400	1,800
A/B W/HR[c]	6,000	1400	--	--	25.2	13,100	--	--	13,100
	7,000	1400	--	--	58.8	30,500	--	--	30,500
	10,000	1400	--	--	82.0	42,600	--	--	42,600
	10,450	1400	--	--	85.2	44,300	--	--	44,300
	10,750	1400	--	--	88.0	45,700	--	--	45,700
	10,900	1400	--	--	88.2	46,300	--	--	46,300
F/F[d]	1,400	amb	--	--	--	--	6	200	200
	2,100	amb	--	--	--	--	13	500	500
	2,200	amb	--	--	--	--	13	500	500
	2,900	amb	--	--	--	--	21	800	800
ME[e]	450	130	--	--	--	--	11	500	500
	750	130	--	--	--	--	14	600	600
	900	130	--	--	--	--	16	700	700

All annual utility requirements are based on 4,000 h/yr operation, except the 6,000 scfm A/B W/HR, which operates 2,000 h/yr, and the M/E's, which operate 4,800 h/yr.
Costs are based on water, \$0.30/100 ft^3; No. 2 fuel oil, \$0.52/gal; and electricity, \$0.041/kWh.
All costs are rounded to the nearest \$100.
[a]ESP/HE = electrostatic precipitator with cooling system.
[b]HVAF/HE = high velocity air filter with cooling system.
[c]A/B W/HR = afterburner with heat recovery.
[d]F/F = fabric filter.
[e]M/E = mist eliminator.

factor (n=20, i=10) is 0.11746.[41] This factor, multiplied by the capital investment cost for each pollution control device, gives the capital recovery cost.

The annual cost of taxes and insurance is assumed to be 2 percent of the total capital investment cost for each control device. General and administrative costs also are assumed to be 2 percent of the total capital investment cost.

The annualized cost for each control device is shown in Table 8-44. These costs are used to determine the annualized cost for each plant shown previously in Table 8-41.

8.2.2.6.3 Recovery credits. The materials collected by the ESP, ESP with heat exchanger, HVAF, HVAF with heat exchanger, and the mist eliminator on the asphalt storage tanks are liquid hydrocarbons. The afterburners with heat recovery on the saturator operation incinerate liquid hydrocarbons. The cyclones and fabric filters collect filler and parting agent for recycle. The afterburner with heat recovery operating at 760°C (1400°F) on the blowing still incinerates liquid hydrocarbons. It is assumed that all of the liquid hydrocarbons collected have the same dollar and heat value as No. 6 fuel oil which costs about \$79.30/m^3 (\$0.30/gal) in November 1978 dollars and has a heating value of 41.8 gigajoules/m^3 (150,000 Btu/gal).[49,50] The filler has a value of \$17.64/Mg (\$16/ton) and the parting agent has a value of \$41.90/Mg (\$38/ton). The liquid hydrocarbons burned in the afterburner with heat recovery systems have an assumed heating value of 3.96 gigajoules/m^3 (142,000 Btu/gal), which is the heating value of No. 2 fuel oil. The dollar value of No. 2 fuel oil is \$137.40/m^3 (\$0.52/gal). The dollar value of No. 2 and No. 6 fuel oil is based on a specific gravity of 903 kg/m^3 (7.54 lb/gal) for No. 2 fuel oil and 960 kg/m^3 (8.0 lb/gal) for No. 6 fuel oil.[50] The heat recovery system is used to generate steam or to preheat asphalt. The heat released in burning the liquid hydrocarbon replaces an equivalent quantity of heat from burning No. 2 fuel oil. The particulates from the saturator are assumed to be 100 percent combustible, and those from the blowing still cyclone are assumed to be 50 percent combustible.

TABLE 8-44. INCREASE IN ANNUAL VARIABLE AND FIXED OPERATING COSTS FROM BASELINE OF INDIVIDUAL POLLUTION CONTROL DEVICES FOR THE MODEL ASPHALT ROOFING PLANTS

Control device	Operating characteristics				Annual operating costs (November 1978 dollars)						
					Variable costs				Fixed costs		
	Nm^3/s	(scfm)	°C	(°F)	Labor and super.	Maint. material	Process util.	Cap. rec.	Taxes and ins.	Gen. and admin.	Total costs
ESP/HE[a] and HVAF[b]	4.72	(10,000)	38	(100)	1,800	1,800	1,700	2,400	400	400	8,500
	4.93	(10,450)	38	(100)	1,800	1,800	1,800	2,500	400	400	8,700
	5.07	(10,750)	38	(100)	1,800	1,800	1,800	2,600	400	400	8,800
	5.14	(10,900)	38	(100)	1,800	1,900	1,800	2,600	400	400	8,900
A/B W/HR[c]	2.83	(6,000)	760	(1400)	--	--	13,100	--	--	--	13,100
	3.30	(7,000)	760	(1400)	--	--	30,600	--	--	--	30,600
A/B W/HR	4.72	(10,000)	760	(1400)	--	--	42,600	--	--	--	42,600
	4.93	(10,450)	760	(1400)	--	--	44,300	--	--	--	44,300
	5.07	(10,750)	760	(1400)	--	--	45,700	--	--	--	45,700
	5.14	(10,900)	760	(1400)	--	--	46,300	--	--	--	46,300
F/F[d]	0.66	(1,400)	ambient		900	800	400	1,700	300	300	4,400
	0.99	(2,100)	ambient		900	800	500	1,800	300	300	4,600
	1.04	(2,200)	ambient		900	800	500	1,800	300	300	4,600
	1.37	(2,900)	ambient		900	700	800	1,800	300	300	4,800
M/E[e]	0.21	(450)	54	(130)	2,900	1,000	500	2,300	400	400	7,500
	0.35	(750)	54	(130)	2,900	1,500	600	3,500	600	600	9,700
	0.425	(900)	54	(130)	2,900	1,500	700	4,100	700	700	10,400

All costs are based on 4,000 h/yr operation except the 2.83 Nm^3/s (6,000 scfm) A/B W/HR, which operates 2,000 h/yr, and the M/E's, which operate 4,800 h/yr.

[a]ESP/HE = electrostatic precipitator with cooling system.
[b]HVAF/HE = high velocity air filter with cooling system.
[c]A/B W/HR = afterburner with heat recovery for blowing still.
[d]F/F = fabric filer.
[e]M/E = mist eliminator.

Recovery credits are not considered in any of the annualized costs reported in this document because there are not enough data on the amount of product that is being recovered.

8.2.2.7 Annualized Cost Comparisons. The annualized costs of the baseline (Regulatory Alternative 1) pollution control systems are lower than those of the other four regulatory alternatives. The annualized costs for Alternatives 2 to 5 increase by the annualized cost of the cooling systems on the ESP and HEAF and by the cost of the additional fuel required to operate the A/B W/HR at a higher temperature on the saturator, wet looper, and coater operation; and increase by the annualized cost of the mist eliminator on the asphalt storage tanks. Alternatives 3 and 5 incur an increase in cost for the net fuel required to raise the operating temperature of the A/B W/HR from 482°C (900°F) to 760°C (1400°F). Alternatives 4 and 5 incur an additional annualized cost for using fabric filters on the material handling systems instead of cyclones, since the annualized cost of fabric filters is greater than the cyclones.

Table 8-45 shows the increase in the annualized costs of the pollution control systems for each plant size and configuration for Alternatives 2 to 5 as compared to the baseline pollution control systems and shows the percentage increase in annualized costs compared to the baseline annualized costs without recovery credits. The increase in annualized costs is least for Alternative 3 followed by Alternatives 2, 5, and 4 (in that order) for plants with blowing stills and is less for Alternatives 2 and 3 than for Alternatives 4 and 5 for plants without blowing stills.

Comparison of the three alternative control devices on the baseline saturator, wet looper, and coater operation in Table 8-42 shows that the ESP is the least expensive to operate, followed by the HVAF and A/B W/HR. The ESP costs $6,700 less to operate than the HVAF and $72,400 less to operate than the A/B W/HR at small plants; costs $12,700 and $142,800 less than the respective devices at medium plants; and costs $18,800 and $212,600 less than the respective devices at large plants. Comparing the three alternative devices on the saturator, wet looper, and coater operation for Alternatives 2 to 5 shows that the ESP with cooling system costs $6,900 less to operate than the HVAF with cooling system and $108,000 less to operate than the A/B W/HR at the small plants; costs

TABLE 8-45. INCREASE IN ANNUALIZED COSTS OF POLLUTION CONTROL SYSTEMS FOR ALTERNATIVES 2 TO 5 COMPARED TO THE BASELINE POLLUTION CONTROL SYSTEMS

Plant size	Plant configuration	Saturator control device	Increase in annualized costs (November 1978 dollars)[a,b]							
			Alternative 2		Alternative 3		Alternative 4		Alternative 5	
			$	%	$	%	$	%	$	%
Small	1	ESP[c]	16,200	14.1	29,300	25.4	25,200	21.9	38,300	33.3
	1	HVAF[d]	16,400	13.5	29,500	24.2	25,400	20.9	38,500	31.6
	1	A/B W/HR[e]	51,800	27.6	64,900	34.6	60,800	32.4	73,900	39.4
	2	ESP	16,200	25.3	16,200	25.3	25,200	39.4	25,200	39.4
	2	HVAF	16,400	23.4	16,400	23.4	25,400	36.0	25,400	36.0
	2	A/B W/HR	51,800	38.0	51,800	38.0	60,800	44.6	60,800	44.6
Medium	1	ESP	6,200	3.2	19,300	10.0	15,600	8.1	28,700	14.9
	1	HVAF	6,300	3.1	19,400	9.5	15,700	7.7	28,800	14.0
	1	A/B W/HR	77,200	23.0	90,300	26.9	86,600	25.8	99,700	29.7
	2	ESP	27,000	22.4	27,000	22.4	36,400	30.2	36,400	30.2
	2	HVAF	27,100	20.3	27,100	20.3	36,500	27.4	36,500	27.4
	2	A/B W/HR	98,000	37.2	98,000	37.2	107,400	40.8	107,400	40.8
Large	1	ESP	36,300	14.2	66,900	26.2	45,700	17.9	76,300	29.8
	1	HVAF	35,800	13.0	66,400	24.2	45,200	16.5	75,800	27.6
	1	A/B W/HR	141,300	30.2	171,900	36.7	150,700	32.2	181,300	38.7
	2	ESP	36,300	20.1	36,300	20.1	45,700	26.1	45,700	26.1
	2	HVAF	35,800	18.5	35,800	18.5	45,200	23.3	45,200	23.3
	2	A/B W/HR	141,300	36.5	141,300	36.5	150,700	38.9	150,700	38.9

[a]Net annualized costs are the sum of annual variable and fixed operating costs less recovery credits.
[b]The increase in annualized cost as a percentage of the total baseline annualized cost.
[c]ESP = electrostatic precipitator.
[d]HVAF = high velocity air filter.
[e]A/B W/HR = afterburner with heat recovery.

$12,800 and $213,800 less than the respective devices at medium plants; and costs $18,300 and $317,600 less than the respective devices at large plants.

Comparison of the two alternative devices on the materials handling operations shows that the cyclones are less expensive to operate than the fabric filters. The annualized cost differences between the two types of devices are $9,000 at small plants and $9,400 at medium and large plants. These cost differences account for the cost differences between Alternatives 2 and 4 and for the cost differences between Alternatives 3 and 5.

Comparison of the annualized costs of the A/B W/HR on the blowing stills at the two operating temperatures shows that the higher temperature 760°C (1400°F) operation costs more than the lower temperature 482°C (900°F) operation. The annual cost difference is $13,100 at the small and medium plants and $20,600 at the large plants. These cost differences account for the cost differences between Alternatives 2 and 3 and between Alternatives 4 and 5.

8.2.2.8 Cost Effectiveness. The cost effectiveness of a device or system is simply the annualized cost of the device or system divided by the amount of pollutants collected in megagrams (tons) per year. The lower the cost effectiveness in dollars per megagram (dollars per ton), the more cost effective is the device or system.

Table 8-46 shows the cost effectiveness of each individual pollution control device considered in this analysis. Table 8-47 shows the cost effectiveness from baseline of each control system for each plant size and configuration for Regulatory Alternatives 3 and 5. The cost effectiveness of individual control devices and control systems used on the model asphalt roofing plants are compared in the following two sections.

8.2.2.8.1 Cost effectiveness comparisons of individual control devices. An examination of Table 8-46 shows that the cost effectiveness of the devices used on the saturator, wet looper, and coater operation is about $958/Mg ($869/ton) for the ESP with cooling system, $1,070/Mg ($971/ton) for the HVAF with cooling system, and $2,650/Mg ($2,400/ton) for the A/B W/HR operating at 760°C (1400°F). The cost effectiveness of the devices used on the material handling systems ranges from $259/Mg

TABLE 8-46. COST EFFECTIVENESS OF POLLUTION CONTROL DEVICES USED IN MODEL ASPHALT ROOFING PLANTS

Control device	Operating characteristics				Cost effectiveness in $/Mg ($/ton)				
					Annualized cost ($)	Pollutants collected		Cost effectiveness[a]	
	Nm^3/s	(scfm)	°C	(°F)		Mg	(tons)	$/Mg	$/ton
ESP/HE[b]	4.93	(10,450)	38	(100)	58,900	61.50	(67.79)	958	869
HVAF/HE[c]	4.93	(10,450)	38	(100)	65,800	61.50	(67.79)	1,070	971
A/B W/HR[d]	2.83	(6,000)	482	(900)[h]	26,840	293.7	(324.0)	91	83
	2.83	(6,000)	760	(1400)[h]	34,900	355.3	(391.5)	98	89
	2.83	(6,000)	482	(900)[j]	69,200	612.8	(675.6)	113	102
	2.83	(6,000)	760	(1400)[j]	93,400	699.4	(771.1)	134	121
	3.30	(7,000)	482	(900)	79,200	733.8	(808.9)	108	98
	3.30	(7,000)	760	(1400)	103,100	886.0	(977.0)	116	106
A/B W/HR	4.93	(10,450)	760	(1400)	163,000	61.50	(67.79)	2,650	2,400
CYC[e]	0.66	(1,400)	Ambient		3,600	10.45	(11.52)	344	313
	0.99	(2,100)	Ambient		4,500	15.62	(17.22)	288	261
	1.04	(2,200)	Ambient		4,800	16.43	(18.11)	292	265
	1.37	(2,900)	Ambient		5,600	21.65	(23.87)	259	235
F/F[f]	0.66	(1,400)	Ambient		7,900	12.85	(14.17)	615	558
	0.99	(2,100)	Ambient		8,900	19.28	(21.25)	462	419
	1.04	(2,200)	Ambient		9,300	20.20	(22.27)	460	418
	1.37	(2,900)	Ambient		10,200	26.63	(29.35)	383	348
M/E[g]	0.21	(450)	54	(130)	7,000	3.52	(3.88)	1,988	1,804
	0.35	(750)	54	(130)	8,800	5.90	(6.50)	1,492	1,354
	0.425	(900)	54	(130)	9,300	6.90	(7.61)	1,348	1,222

[a]Cost effectiveness is the annualized cost of the pollution control system divided by the amount of pollutants collected annually (4,000 h/yr operation).
[b]ESP/HE = electrostatic precipitator with cooling system.
[c]HVAF/HE = high velocity air filter with cooling system.
[d]A/B W/HR = afterburner with heat recovery.
[e]M/E = mist eliminator.
[f]F/F = fabric filter.
[g]M/E = mist eliminator.
[h]Data based on 2,000 h/yr operation.
[j]Data based on 4,000 h/yr operation.

TABLE 8-47. COST EFFECTIVENESS OF POLLUTION CONTROL SYSTEMS FOR MODEL ASPHALT ROOFING PLANTS

Plant size	Plant configuration	Saturator control device	Baseline		Alternative 1 to Alternative 3		Alternative 3 to Alternative 5		Alternative 1 to Alternative 5	
			$/Mg	$/ton	$/Mg	$/ton	$/Mg	$/ton	$/Mg	$/ton
Small	1	ESP[a]	355	322	239	217	1,459	1,321	295	270
	1	HVAF[b]	376	341	239	217	1,459	1,321	298	271
	1	A/B W/HR[c]	579	524	528	480	1,459	1,321	572	521
	2	ESP	2,090	1,900	265	239	1,459	1,321	573	339
	2	HVAF	2,310	2,099	267	242	1,459	1,321	376	342
	2	A/B W/HR	4,458	4,052	844	766	1,459	1,321	901	817
Medium	1	ESP	270	245	128	115	1,089	988	179	163
	1	HVAF	288	261	129	117	1,089	988	180	163
	1	A/B W/HR	470	426	596	537	1,089	988	624	561
	2	ESP	1,264	1,099	417	373	1,089	988	497	444
	2	HVAF	1,326	1,215	419	374	1,089	988	498	445
	2	A/B W/HR	2,621	2,401	1,514	1,353	1,089	988	1,463	1,311
Large	1	ESP	287	270	303	275	1,089	988	334	301
	1	HVAF	308	290	301	273	1,089	988	331	300
	1	A/B W/HR	524	494	780	708	1,089	988	792	718
	2	ESP	1,094	993	533	484	1,089	988	596	541
	2	HVAF	1,212	1,100	526	478	1,089	988	590	535
	2	A/B W/HR	2,425	2,200	2,077	1,885	1,089	988	1,966	1,783

[a]ESP = electrostatic precipitator.
[b]HVAF = high velocity air filter.
[c]A/B W/HR = afterburner with heat recovery.

($235/ton) to $344 ($313/ton) for cyclones, and ranges from $383/Mg ($348/ton) to $615/Mg ($558/ton) for fabric filters. The cost effectiveness of the mist eliminator on the asphalt storage tanks ranges from $1,348/Mg ($1,222/ton) to $1,988/Mg ($1,804/ton). The A/B W/HR on the blowing stills has a cost effectiveness which ranges from $91/Mg ($83/ton) to $134/Mg ($121/ton) when operating at 482°C (900°F), and ranges from $98/Mg ($89/ton) to $116/Mg ($106/ton) when operating at 760°C (1400°F).

These data indicate that the most cost effective device for controlling the saturator, wet looper, and coater operation under Regulatory Alternatives 2 to 5 is the ESP with cooling system. The HVAF with cooling system costs about $112/Mg ($102/ton) more than the ESP with cooling system. The A/B W/HR operating at 760°C (1400°F) costs about $1,692/Mg ($1,531/ton) more than the ESP with heat exchanger. The A/B W/HR is about two times as expensive on a dollar-per-megagram (dollars-per-ton) basis as the other two devices installed on the saturator, wet looper, and coater operation.

The data given in Table 8-46 also indicate the cyclones on the filler surge bin and storage operation, and the parting agent bin and storage operation, are more cost effective than the fabric filters. The fabric filters cost about $300/Mg ($270/ton) to $480/Mg ($435/ton) more than the cyclones. This indicates that Alternatives 4 and 5, which use the fabric filters, are less cost effective than Alternatives 2 and 3, which use the cyclones.

8.2.2.8.2 Cost effectiveness comparisons of regulatory alternatives. The data in Table 8-47 indicate that the most cost effective regulatory alternative is No. 3 and that Alternatives 3 and 5 are more cost effective than Alternatives 2 and 4.

8.2.3 Cost Summary

The capital investment costs, annualized costs, and unit product costs for new model asphalt roofing plants with pollution control systems are given for small, medium, and large plants, both with and without blowing stills, for the five regulatory alternatives. These costs are derived from the information presented in the previous two sections (8.2.1 and 8.2.2).

The capital investment costs represent the total investment required to construct new model asphalt roofing plants and install a new pollution control system, and include direct costs, indirect costs, contractor's fee, and contingency. Tables 8-48 to 8-50 show the total capital investment cost for each regulatory alternative and plant configuration (with or without blowing stills) for small, medium, and large plants, respectively. The small plants cost $9,178,000 to $9,577,000; the medium plants cost $14,948,000 to $15,589,000; and the large plants cost $17,603,000 to $18,388,000. The pollution control systems cost $232,000 to $467,000 for small plants, $447,000 to $758,000 for medium plants, and $650,000 to $1,050,000 for large plants. The pollution control systems represent 2.5 to 4.9 percent of the total capital investment cost of small plants, 3.0 to 4.9 percent of the total capital investment cost of medium plants, and 3.7 to 5.7 percent of the total capital investment cost of large plants.

The annualized costs represent the variable, fixed, and overhead costs required to operate the plants and represent the variable and fixed costs required to operate the pollution control systems. Tables 8-51 to 8-53 show the total annualized cost for each regulatory alternative and plant configuration for small, medium, and large plants, respectively. The annualized cost for small plants is $14,761,000 to $14,920,000; for medium plants is $27,773,000 to $28,118,000; and for large plants is $34,477,000 to $34,983,000. The pollution control systems cost $64,000 to $261,000 per year to operate at small plants, $121,000 to $435,000 per year to operate at medium plants, and $175,000 to $650,000 per year to operate at large plants. The annualized costs of the pollution control systems represent 0.4 to 1.7 percent of the total annualized cost of small plants, 0.4 to 1.5 percent of the total annualized cost of medium plants, and 0.5 to 1.8 percent of the total annualized cost of large plants.

The unit product costs represent the annualized cost of the plant plus the annualized cost of the pollution control system divided by the annual production of roofing shingle sales square at each plant. The small plants produce 1,030,000 roofing shingle sales squares annually; the medium plants produce 2,060,000 sales squares annually; and the large

TABLE 8-48. TOTAL CAPITAL INVESTMENT COSTS OF A SMALL, NEW ASPHALT ROOFING PLANT WITH A POLLUTION CONTROL SYSTEM

Description of alternative and capital cost item	Capital investment costs (November 1978 dollars)[a]					
	ESP[b] on saturator		HVAF[c] on saturator		A/B W/HR[d] on saturator	
	With blow stills	Without blow stills	With blow stills	Without blow stills	With blow stills	Without blow stills
Alternative 1						
New plant	9,110,000	8,946,000	9,110,000	8,946,000	9,110,000	8,946,000
Control system	396,000	275,000	368,000	247,000	353,000	232,000
Total	9,506,000	9,221,000	9,478,000	9,193,000	9,463,000	9,178,000
Alternatives 2 and 3						
New plant	9,110,000	8,946,000	9,110,000	8,946,000	9,110,000	8,946,000
Control system	436,000	315,000	408,000	287,000	372,000	251,000
Total	9,546,000	9,261,000	9,518,000	9,233,000	9,482,000	9,197,000
Alternatives 4 and 5						
New plant	9,110,000	8,946,000	9,110,000	8,946,000	9,110,000	8,946,000
Control system	467,000	346,000	439,000	318,000	403,000	282,000
Total	9,577,000	9,292,000	9,549,000	9,264,000	9,513,000	9,228,000

[a]A small plant produces 109,759 Mg (121,000 tons) of roofing shingles annually. All costs rounded to the nearest $1,000.
[b]ESP = electrostatic precipitator.
[c]HVAF = high velocity air filter.
[d]A/B W/HR = afterburner with heat recovery.

TABLE 8-49. TOTAL CAPITAL INVESTMENT COSTS OF A MEDIUM, NEW ASPHALT ROOFING PLANT WITH A POLLUTION CONTROL SYSTEM

Description of alternative and capital cost item	Capital investment costs (November 1978 dollars)[a]					
	ESP[b] on saturator		HVAF[c] on saturator		A/B W/HR[d] on saturator	
	With blow stills	Without blow stills	With blow stills	Without blow stills	With blow wtills	Without blow stills
Alternative 1						
New plant	14,831,000	14,501,000	14,831,000	14,501,000	14,831,000	14,501,000
Control system	657,000	536,000	597,000	476,000	568,000	447,000
Total	15,488,000	15,037,000	15,428,000	14,977,000	15,399,000	14,948,000
Alternatives 2 and 3						
New plant	14,831,000	14,501,000	14,831,000	14,501,000	14,831,000	14,501,000
Control system	728,000	607,000	668,000	547,000	597,000	476,000
Total	15,559,000	15,108,000	15,499,000	15,048,000	15,428,000	14,977,000
Alternatives 4 and 5						
New plant	14,831,000	14,501,000	14,831,000	14,501,000	14,831,000	14,501,000
Control system	758,000	637,000	698,000	577,000	627,000	506,000
Total	15,589,000	15,138,000	15,529,000	15,078,000	15,458,000	15,007,000

[a]A medium plant produces 219,518 Mg (242,000 tons) of roofing shingles annually. All costs rounded to the nearest $1,000.
[b]ESP = electrostatic precipitator.
[c]HVAF = high velocity air filter.
[d]A/B W/HR = afterburner with heat recovery.

TABLE 8-50. TOTAL CAPITAL INVESTMENT COSTS OF A LARGE, NEW ASPHALT ROOFING PLANT WITH A POLLUTION CONTROL SYSTEM

Description of alternative and capital cost item	Capital investment costs (November 1978 dollars)[a]					
	ESP[b] on saturator		HVAF[c] on saturator		A/B W/HR[d] on saturator	
	With blow stills	Without blow stills	With blow stills	Without blow stills	With blow stills	Without blow stills
Alternative 1						
New plant	17,338,000	16,953,000	17,338,000	16,953,000	17,338,000	16,953,000
Control system	958,000	787,000	832,000	691,000	791,000	650,000
Total	18,296,000	17,740,000	18,170,000	17,644,000	18,129,000	17,603,000
Alternatives 2 and 3						
New plant	17,338,000	16,953,000	17,338,000	16,953,000	17,338,000	16,953,000
Control system	1,020,000	879,000	924,000	783,000	820,000	679,000
Total	18,358,000	17,832,000	18,262,000	17,736,000	18,158,000	17,632,000
Alternatives 4 and 5						
New plant	17,338,000	16,953,000	17,338,000	16,953,000	17,338,000	16,953,000
Control system	1,050,000	909,000	954,000	813,000	850,000	709,000
Total	18,388,000	17,862,000	18,292,000	17,766,000	18,188,000	17,662,000

[a]A large plant produces 281,201 Mg (310,000 tons) of roofing shingles annually. All costs rounded to the nearest $1,000.
[b]ESP = electrostatic precipitator.
[c]HVAF = high velocity air filter.
[d]A/B W/HR = afterburner with heat recovery.

TABLE 8-51. TOTAL ANNUALIZED COSTS FOR A SMALL NEW ASPHALT ROOFING PLANT WITH A POLLUTION CONTROL SYSTEM

Description of alternative and annualized cost item	Annualized costs (November 1978 dollars)[a]					
	ESP[b] on saturator		HVAF[c] on saturator		A/B W/HR[d] on saturator	
	With blow stills	Without blow stills	With blow stills	Without blow stills	With blow stills	Without blow stills
Alternative 1						
New plant	14,646,000	14,723,000	14,646,000	14,723,000	14,646,000	14,723,000
Control system	115,000	64,000	122,000	71,000	188,000	136,000
Total	14,761,000	14,787,000	14,768,000	14,794,500	14,834,000	14,859,000
Alternative 2						
New plant	14,646,000	14,723,000	14,646,000	14,723,000	14,646,000	14,723,000
Control system	131,000	80,000	138,000	87,000	239,000	188,000
Total	14,777,000	14,803,000	14,784,000	14,810,000	14,885,000	14,911,000
Alternative 3						
New plant	14,646,000	14,723,000	14,646,000	14,723,000	14,646,000	14,723,000
Control system	144,000	80,000	151,000	87,000	252,000	188,000
Total	14,790,000	14,803,000	14,797,000	14,810,000	14,898,000	14,911,000
Alternative 4						
New Plant	14,646,000	14,723,000	14,646,000	14,723,000	14,646,000	14,723,000
Control system	140,000	89,000	147,000	96,000	248,000	197,000
Total	14,786,000	14,812,000	14,793,000	14,819,000	14,894,000	14,920,000
Alternative 5						
New plant	14,646,000	14,723,000	14,646,000	14,723,000	14,646,000	14,723,000
Control system	153,000	89,000	160,000	96,000	261,000	197,000
Total	14,799,000	14,812,000	14,806,000	14,819,000	14,907,000	14,920,000

[a]A small plant produces 109,759 Mg (121,000 tons) of roofing shingles annually. All costs rounded to the nearest $1,000.
[b]ESP = electrostatic precipitator.
[c]HVAF = high velocity air filter.
[d]A/B W/HR = afterburner with heat recovery.

TABLE 8-52. TOTAL ANNUALIZED COSTS FOR A MEDIUM, NEW ASPHALT ROOFING PLANT WITH A POLLUTION CONTROL SYSTEM

Description of alternative and annualized cost item	Annualized costs (November 1978 dollars)[a]					
	ESP on saturator		HVAF on saturator		A/B W/HR on saturator	
	With blow stills	Without blow stills	With blow stills	Without blow stills	With blow stills	Without blow stills
Alternative 1						
New plant	27,580,000	27,737,000	27,580,000	27,737,000	27,580,000	27,737,000
Control system	193,000	121,000	205,000	133,000	335,000	263,000
Total	27,773,000	27,858,000	27,785,000	27,870,000	27,915,000	28,000,000
Alternative 2						
New plant	27,580,000	27,737,000	27,580,000	27,737,000	27,580,000	27,737,000
Control system	199,000	148,000	212,000	160,000	413,000	361,000
Total	27,779,000	27,885,000	27,792,000	27,897,000	27,993,000	28,098,000
Alternative 3						
New plant	27,580,000	27,737,000	27,580,000	27,737,000	27,580,000	27,737,000
Control system	212,000	148,000	225,000	160,000	426,000	361,000
Total	27,792,000	27,885,000	27,805,000	27,897,000	28,006,000	28,098,000
Alternative 4						
New plant	27,580,000	27,737,000	27,580,000	27,737,000	27,580,000	27,737,000
Control system	208,000	157,000	224,000	170,000	422,000	371,000
Total	27,788,000	27,894,000	27,804,000	27,907,000	28,002,000	28,118,000
Alternative 5						
New plant	27,580,000	27,737,000	27,580,000	27,737,000	27,580,000	27,737,000
Control system	221,000	157,000	237,000	170,000	435,000	371,000
Total	27,801,000	27,894,000	27,814,000	27,907,000	28,015,000	28,107,000

[a]A medium plant produces 219,518 Mg (242,000 tons) of roofing shingles annually. All costs rounded to the nearest $1,000.
[b]ESP = electrostatic precipitator.
[c]HVAF = high velocity air filter.
[d]A/B W/HR = afterburner with heat recovery.

TABLE 8-53. TOTAL ANNUALIZED COSTS FOR A LARGE, NEW ASPHALT ROOFING PLANT WITH A POLLUTION CONTROL SYSTEM

Description of alternative and annualized cost item	Annualized costs (November 1978 dollars)[a]					
	ESP[b] on saturator		HVAF[c] on saturator		A/B W/HR[d] on saturator	
	With blow stills	Without blow stills	With blow stills	Without blow stills	With blow stills	Without blow stills
Alternative 1						
New plant	34,221,000	34,445,000	34,221,000	34,445,000	34,221,000	34,445,000
Control system	256,000	175,000	275,000	194,000	468,000	387,000
Total	34,477,000	34,620,000	34,496,000	34,639,000	34,689,000	34,832,000
Alternative 2						
New plant	34,221,000	34,445,000	34,221,000	34,445,000	34,221,000	34,445,000
Control system	292,000	211,000	310,000	229,000	610,000	529,000
Total	34,513,000	34,656,000	34,531,000	34,674,000	34,831,000	34,974,000
Alternative 3						
New plant	34,221,000	34,445,000	34,221,000	34,445,000	34,221,000	34,445,000
Control system	323,000	211,000	341,000	229,000	640,000	529,000
Total	34,544,000	34,656,000	34,562,000	34,674,000	34,861,000	34,974,000
Alternative 4						
New plant	34,221,000	34,445,000	34,221,000	34,445,000	34,221,000	34,445,000
Control system	302,000	221,000	312,000	239,000	619,000	538,000
Total	34,523,000	34,666,000	34,533,000	34,684,000	34,840,000	34,983,000
Alternative 5						
New plant	34,221,000	34,445,000	34,221,000	34,445,000	34,221,000	34,445,000
Control system	332,000	221,000	350,000	239,000	650,000	538,000
Total	34,553,000	34,666,000	34,571,000	34,684,000	34,871,000	34,983,000

[a]A large plant produces 281,201 Mg (310,000 tons) of roofing shingles annually. All costs rounded to the nearest $1,000.
[b]ESP = electrostatic precipitator.
[c]HVAF = high velocity air filter.
[d]A/B W/HR = afterburner with heat recovery.

plants produce 2,640,000 sales squares annually. Tables 8-54 to 8-56 show the unit product costs for each plant configuration and regulatory alternative for small, medium, and large plants, respectively. The cost of a roofing shingle sales square at small plants is $14.33 to $14.47; at medium plants is $13.48 to $13.64; and at large plants is $13.06 to $13.25. The unit product cost increase attributed to the annualized cost of the pollution control system at small plants is $0.06 to $0.25; at medium plants is $0.06 to $0.21; and at large plants is $0.07 to $0.25. The cost increases attributable to the pollution control system operations represent a cost increase in the total unit product cost of 0.4 to 1.7 percent at small plants; 0.4 to 1.6 percent at medium plants; and 0.5 to 1.6 percent at large plants.

8.3 OTHER COST CONSIDERATIONS

This section summarizes the cost currently being imposed upon the asphalt roofing and siding manufacturing industry (ARM) as a result of (1) the Water Pollution Control Act (WPCA); (2) the Resource Conservation and Recovery Act (RCRA); and (3) the Occupational Safety and Health Administration (OSHA).

The impact of the alternative regulatory options on the resource requirements of State, regional, and local regulatory and enforcement agencies is also assessed in this section.

8.3.1 Water Pollution Control Act

The Development Document for Proposed Effluent Limitation Guidelines and New Source Performance Standards for the ARM industry was published by EPA in 1974.[51] At that time, the cost to the industry to comply with best available technology economically acceptable (BATEA) was estimated to be $0.18/Mg ($0.16/ton) of product (1973 dollars). Standards based on these guidelines have not yet been finalized. Thus, the ARM industry is not currently subject to specific provisions under the Water Pollution Control Act.

The ARM industry has minimized waste water discharge in recent years by recirculating cooling water, substituting cooling rolls for direct

TABLE 8-54. UNIT PRODUCT COSTS OF A SMALL, NEW ASPHALT ROOFING PLANT WITH A POLLUTION CONTROL SYSTEM

Description of alternative and product cost item	Unit product costs (November 1978 dollars/sales square)[a]					
	ESP[b] on saturator		HVAF[c] on saturator		A/B W/HR[d] on saturator	
	With blow stills	Without blow stills	With blow stills	Without blow stills	With blow stills	Without blow stills
Alternative 1						
Plant costs	14.22	14.29	14.22	14.29	14.22	14.29
Control costs	0.11	0.06	0.12	0.07	0.18	0.13
Total	14.33	14.35	14.34	14.36	14.40	14.42
Alternative 2						
Plant costs	14.22	14.29	14.22	14.29	14.22	14.29
Control costs	0.13	0.07	0.13	0.08	0.23	0.17
Total	14.35	14.36	14.35	14.37	14.45	14.46
Alternative 3						
Plant costs	14.22	14.29	14.22	14.29	14.22	14.29
Control costs	0.14	0.07	0.15	0.08	0.24	0.17
Total	14.36	14.36	14.37	14.37	14.46	14.46
Alternative 4						
Plant costs	14.22	14.29	14.22	14.29	14.22	14.29
Control costs	0.14	0.08	0.14	0.09	0.24	0.18
Total	14.36	14.37	14.36	14.38	14.46	14.47
Alternative 5						
Plant costs	14.22	14.29	14.22	14.29	14.22	14.29
Control costs	0.15	0.08	0.16	0.09	0.25	0.18
Total	14.37	14.37	14.38	14.38	14.47	14.47

[a]A small plant produces 1,030,000 roofing shingle sales squares annually. The total unit product cost is the sum of the unit cost attributable to plant annualized costs and the unit cost attributable to pollution control system annualized costs.
[b]ESP = electrostatic precipitator.
[c]HVAF = high velocity air filter.
[d]A/B W/HR = afterburner with heat recovery.

TABLE 8-55. UNIT PRODUCT COSTS OF A MEDIUM, NEW ASPHALT ROOFING PLANT WITH A POLLUTION CONTROL SYSTEM

Description of alternative and product cost items	Unit product costs (November 1978 dollars/sales square)[a]					
	ESP[b] on saturator		HVAF[c] on saturator		A/B W/HR[d] on saturator	
	With blow stills	Without blow stills	With blow stills	Without blow stills	With blow stills	Without blow stills
Alternative 1						
Plant costs	13.39	13.46	13.39	13.46	13.39	13.46
Control costs	0.09	0.06	0.10	0.06	0.16	0.12
Total	13.48	13.52	13.49	13.52	13.55	13.58
Alternative 2						
Plant costs	13.39	13.46	13.39	13.46	13.39	13.46
Control costs	0.10	0.07	0.10	0.07	0.20	0.18
Total	13.49	13.53	13.49	13.53	13.59	13.64
Alternative 3						
Plant costs	13.39	13.46	13.39	13.46	13.39	13.46
Control costs	0.10	0.07	0.11	0.07	0.21	0.18
Total	13.49	13.53	13.50	13.53	13.60	13.64
Alternative 4						
Plant costs	13.39	13.46	13.39	13.46	13.39	13.46
Control costs	0.10	0.07	0.11	0.08	0.20	0.18
Total	13.49	13.53	13.50	13.54	13.59	13.64
Alternative 5						
Plant costs	13.39	13.46	13.39	13.46	13.39	13.46
Control costs	0.11	0.08	0.11	0.08	0.21	0.18
Total	13.50	13.54	13.50	13.54	13.60	13.64

[a]A medium plant produces 2,060,000 roofing shingle sales squares annually. The total unit product cost is the sum of the unit cost attributable to plant annualized costs and the unit cost attributable to pollution control system annualized costs.
[b]ESP = electrostatic precipitator.
[c]HVAF = high velocity air filter.
[d]A/B W/HR = afterburner with heat recovery.

TABLE 8-56. UNIT PRODUCT COSTS OF A LARGE, NEW ASPHALT ROOFING PLANT WITH A POLLUTION CONTROL SYSTEM

Description of alternative and product cost items	Unit product costs (November 1978 dollars/sales square)[a]					
	ESP[b] on saturator		HVAF[c] on saturator		A/B W/HR[d] on saturator	
	With blow stills	Without blow stills	With blow stills	Without blow stills	With blow stills	Without blow stills
Alternative 1						
Plant costs	12.96	13.05	12.96	13.05	12.96	13.05
Control costs	0.10	0.07	0.10	0.07	0.18	0.15
Total	13.06	13.12	13.06	13.12	13.14	13.20
Alternative 2						
Plant costs	12.96	13.05	12.96	13.05	12.96	13.05
Control costs	0.11	0.08	0.129	0.09	0.23	0.20
Total	13.07	13.13	13.08	13.14	13.19	13.25
Alternative 3						
Plant costs	12.96	13.05	12.96	13.05	12.96	13.05
Control costs	0.12	0.08	0.13	0.09	0.24	0.20
Total	13.08	13.13	13.09	13.14	13.20	13.25
Alternative 4						
Plant costs	12.96	13.05	12.96	13.05	12.96	13.05
Control costs	0.11	0.08	0.12	0.09	0.23	0.20
Total	13.07	13.13	13.08	13.14	13.19	13.25
Alternative 5						
Plant costs	12.96	13.05	12.96	13.05	12.96	13.05
Control costs	0.13	0.08	0.13	0.09	0.25	0.20
Total	13.09	13.13	13.09	13.14	13.21	13.25

[a]A large plant produces 2,640,000 roofing shingle sales squares annually. The total unit product cost is the sum of the unit cost attributable to plant annualized costs and the unit cost attributable to pollution control system annualized costs.
[b]ESP = electrostatic precipitator.
[c]HVAF = high velocity air filter.
[d]A/B W/HR = afterburner with heat recovery.

contact cooling spray, and by recirculating cooling water used in emission control systems.[52-54]

In the absence of specific performance standards for water emissions, there should be no cost impact that would inhibit the industry's ability to bear the increased costs associated with air pollution regulations.

8.3.2 Resource Conservation and Recovery Act

The Resource Conservation and Recovery Act (RCRA) requires all sources of hazardous solid wastes (1) to record quantities of hazardous waste generated; (2) to label all containers used in storage, transport, or disposal; (3) to use appropriate containers; (4) to furnish information on chemical composition of such waste to handlers; (5) to use a system to assure proper disposition of wastes generated; and (6) to submit reports to the Administrator detailing quantities of wastes generated and the disposition of those wastes. It is not known if the ARM industry is a source of hazardous waste. Asphalt roofing plants presently employ conservation techniques such as recycling paper and waste wood materials in the manufacture of felt, reusing reclaimed oil as fuel or feed stock, and recovering waste heat from afterburners for use in other plant operations. Therefore, if the ARM industry becomes subject to the provisions of the RCRA, only minimal costs may be incurred due to waste produced from additional control equipment required to meet the proposed alternative regulatory options.

8.3.3 Occupational Safety and Health Administration Act

Several asphalt roofing plants were visited during the course of this program. It was the opinion of personnel at plants visited that the impact of OSHA regulations on the industry is minimal. One particular plant had recently been inspected by OSHA personnel with no resulting violations.[55] Several OSHA offices have been contacted to ascertain if there were any compliance problems in the ARM industry plants. There were no reported problems and no reported violations.

The control equipment required under the alternative regulatory options should result in minimal OSHA-related compliance costs (i.e., electrical, plumbing, and similar equipment). The ARM industry's ability to comply with any one of the alternative regulatory options would therefore not be greatly affected by the economic impact of OSHA regulations.

8.3.4 Resource Requirements Imposed on State, Regional, and Local Agencies

The State Implementation Plans which have been approved by EPA require that a company make an application and receive a permit to construct before it is allowed to begin construction.[56,57] The application for the construction permit must list all emission sources, the control system for the emission sources, the nature of the emission (particulate, CO), and all pertinent drawings.

After construction is completed, the States require that the company apply for and receive a permit to operate before operation can be started. The application for operation must contain pertinent emission test data. Certain local and regional agencies also require construction and operating permits before construction of a new plant is started.[58] However, since no more than one new asphalt roofing manufacturing plant per year is estimated to be constructed in the United States through 1985, the promulgation of standards for this industry should not impose major resource requirements on State, regional, and local agencies.

8.4 ECONOMIC IMPACT ASSESSMENT

8.4.1 Introduction and Summary

8.4.1.1 Introduction. This section will assess the economic impact of the potential NSPS on asphalt roofing manufacturing plants. Economic profile information on the industry presented in Section 8.1 will be a principal input to this assessment. The impact on individual new plants will be assessed by using model plants that represent small, medium, and large members of the industry. Various financial analysis techniques will be applied to the model plants. These findings will be assessed, based on the industry profile, to determine industrywide impacts.

As noted in previous chapters the fundamental manufacturing processes for which the NSPS is being developed is the asphalt saturator and blowing still operations of roofing material manufacture. This process is generally similar throughout the 118 asphalt roofing manufacturing plants. While the process is similar, there is considerable difference in plant size attributable to the number of plant production lines. For the purpose of this study, small plants have been designated as those

with one roofing line; medium plants, those typically having two roofing lines; and large plants, those with two roofing lines plus an intergrated saturated felt line. Saturated felt, an organic material frequently made from recycled wastepaper and saturated with asphalt, is basic feedstock for roofing manufacturing plants.

8.4.1.2 Summary. A discounted cash flow analysis demonstrates that an investment in a new asphalt roofing manufacturing plant will remain a profitable investment after the addition of controls required by Regulatory Alternative 5, the most stringent alternative. The investment is profitable for all three model plant sizes: small, medium, and large.

If this additional control cost is completely passed through to customers, it will raise the price of the product by 0.1 percent, a minor increase. If the control cost must be completely absorbed by the manufacturers, the profit margins of the manufacturers are such that a reduction in profit margin equivalent to 0.1 percent of the price will not have a major economic impact.

The Alternative 5 controls will add, at most, 0.7 percent to the total initial investment required for a model plant. The additional 0.7 percent is a minor increase and will not restrict capital availability for the new plant.

Overall, the most stringent alternative will not have a significant economic impact on the asphalt roofing industry.

8.4.2 Ownership, Location, and Concentration Characteristics

Ownership characteristics range from single plant, privately held operations to large, publicly held corporations that own as many as 26 roofing plants. The publicly held companies are diversified corporations within which the manufacture of shingles may represent one of as many as 10 distinct business segments. The various business segments may or may not be related to asphalt roofing, such as building materials, metal products, photography, sugar operations, etc.

In the above companies, the sales contribution from the asphalt roofing products line ranges from less than 10 percent to more than 80 percent of a company's total sales.[59]

The seven largest members of the industry own 85 of the total 118 plants in the industry, or 77 percent. The plants are distributed

across the country, approximately conforming to the population distribution.

There is a gradual move underway in the industry toward consolidation of ownership through both vertical and horizontal integration.[60] Evidence of vertical integration is provided by the fact that the manufacture and distribution of shingles was previously two distinct business activities carried on by separate companies, but over the past few years, corporations have been increasingly combining the manufacture and distribution of shingles into a single line of business.

Evidence of horizontal integration is supplied by the fact that from 1969 to 1978 there have been at least eight mergers or acquisitions between companies in the industry.[60]

8.4.3 Pricing Mechanism

Transportation costs are an important element in the pricing mechanism of the asphalt roofing industry. Manufacturers ship on a freight-equalized basis, i.e., the customer pays no more in freight than it would cost from the nearest supplier.[60] A customer pays only the freight costs from the closest available source of supply, regardless of the location of the shipping or producing plant for a particular order. If a manufacturer ships a greater distance, that manufacturer absorbs the additional freight.

Price shifts by one manufacturer of asphalt and tar roofing products are readily communicated throughout the industry and result in an "evening up" of all manufacturers' prices within a short time.

Since producers of asphalt roofing products generally sell their products f.o.b. producer's plant with freight costs to the customer equalized from the competitive producing or shipping point nearest to the customer, the producer must often absorb a portion of the transporation cost of shipments. Therefore, a producer located considerably farther away from a given area than other producers selling in that area cannot profitably sell in that location at a competitive price. Transportation costs become prohibitive beyond a radius of approximately 300 miles from the manufacturer when another manufacturer is located nearer to the customer.

8.4.3.1 Supply. In general terms, the supply and demand relationship in the asphalt roofing industry can best be summarized as stable.

In spite of the integral relationship between the asphalt roofing manufacturing industry and the building industry, the asphalt roofing industry is not a highly cyclical industry as is the building industry. Figure 8-5 illustrates this stability. Production of asphalt roofing has only varied by ±7.7 percent per year (as shown in Table 8-21a) over the years since 1973, while over the same period of time new housing starts have fluctuated by as much as ±34.3 percent in a single year.[60] Production of asphalt roofing for 1977 is 3.7 percent below the peak production of 1973. The reason asphalt roofing is not a highly cyclical industry is that there are two segments in the total market. One segment is the new construction market and the other segment is the reroofing market for existing structures. The reroofing segment of the market comprises from 50 to 70 percent of the total market, depending on the activity for new construction.[60] Since reroofing is an appreciable amount of the total market and is stable, it dampens swings in asphalt roofing production. Entry into the industry is relatively easy for several reasons: there are no major patent obstacles, high technology is not involved, and the capital requirements are not excessive by manufacturing standards. In spite of the ease of entry into the industry, the industry does not have a history of excess expansions of capacity that lead to oversupply problems.

8.4.3.2 Demand. On the other side of the supply and demand equation, the industry has inelastic demand over a wide range. The industry has experienced rapidly rising costs, the major cause of which has been rising asphalt prices, which rose 41.8 percent from 1974 to 1979. Figure 8-6 illustrates that production (demand) has increased at the same time that prices have increased sharply. This demonstrates inelastic demand. An examination of published statements by industry members, actions by industry members, statements by industry observers, and industry profits and prices indicate that producers have been able to pass through cost increases and maintain acceptable profits.[61,62]

There are several reasons for the industry's inelastic demand. First, a roof is an indispensable part of a building. Second, the competitive product (wood shingles) costs about 60 percent more than asphalt shingles. Third, in the volatile new housing segment of the market, the cost of the shingles, as sold by the manufacturer, represents

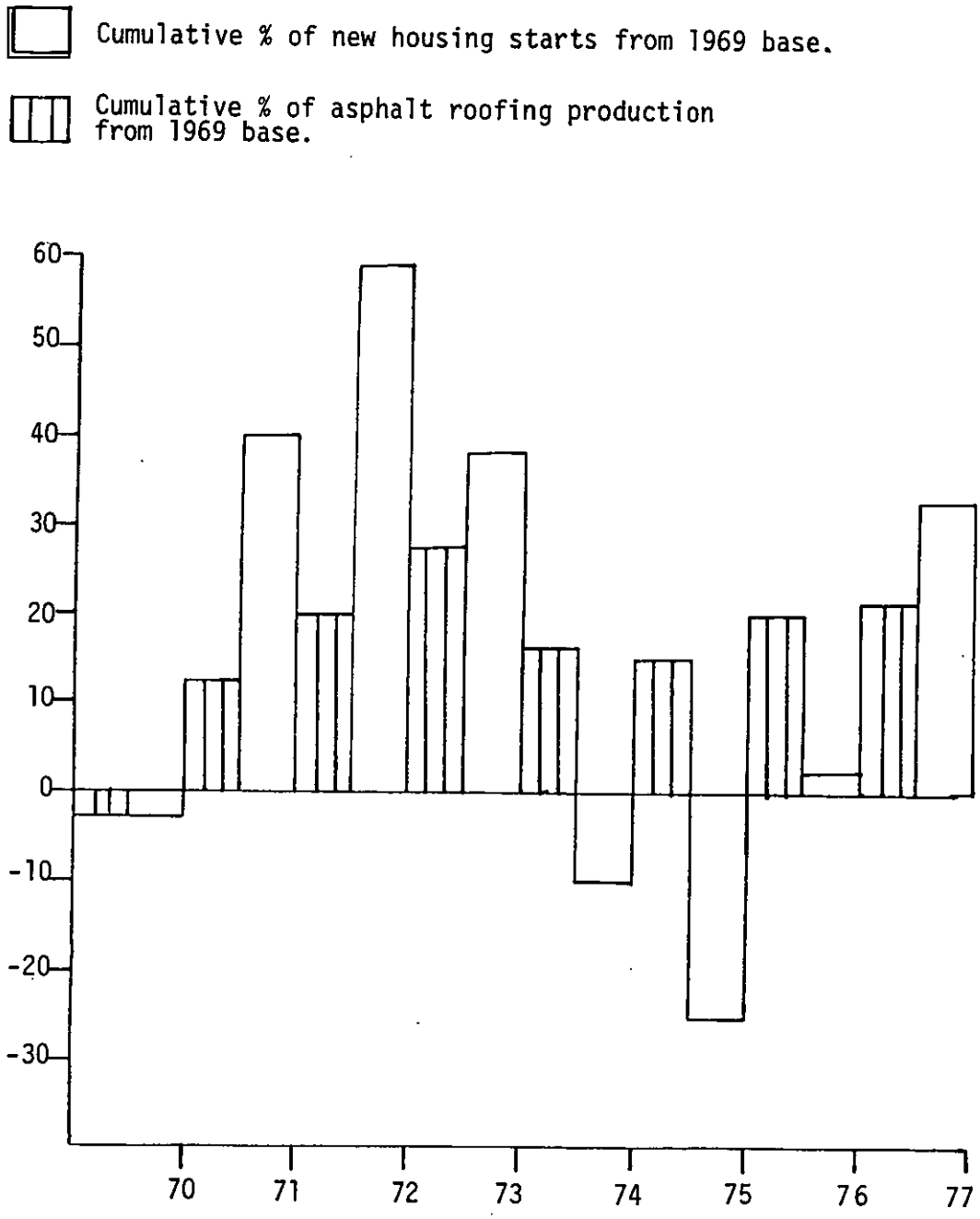

Figure 8-5. Stability in Asphalt Roofing Production.

Sources: Statistical Abstract of the United States 1977. Section 8.1.

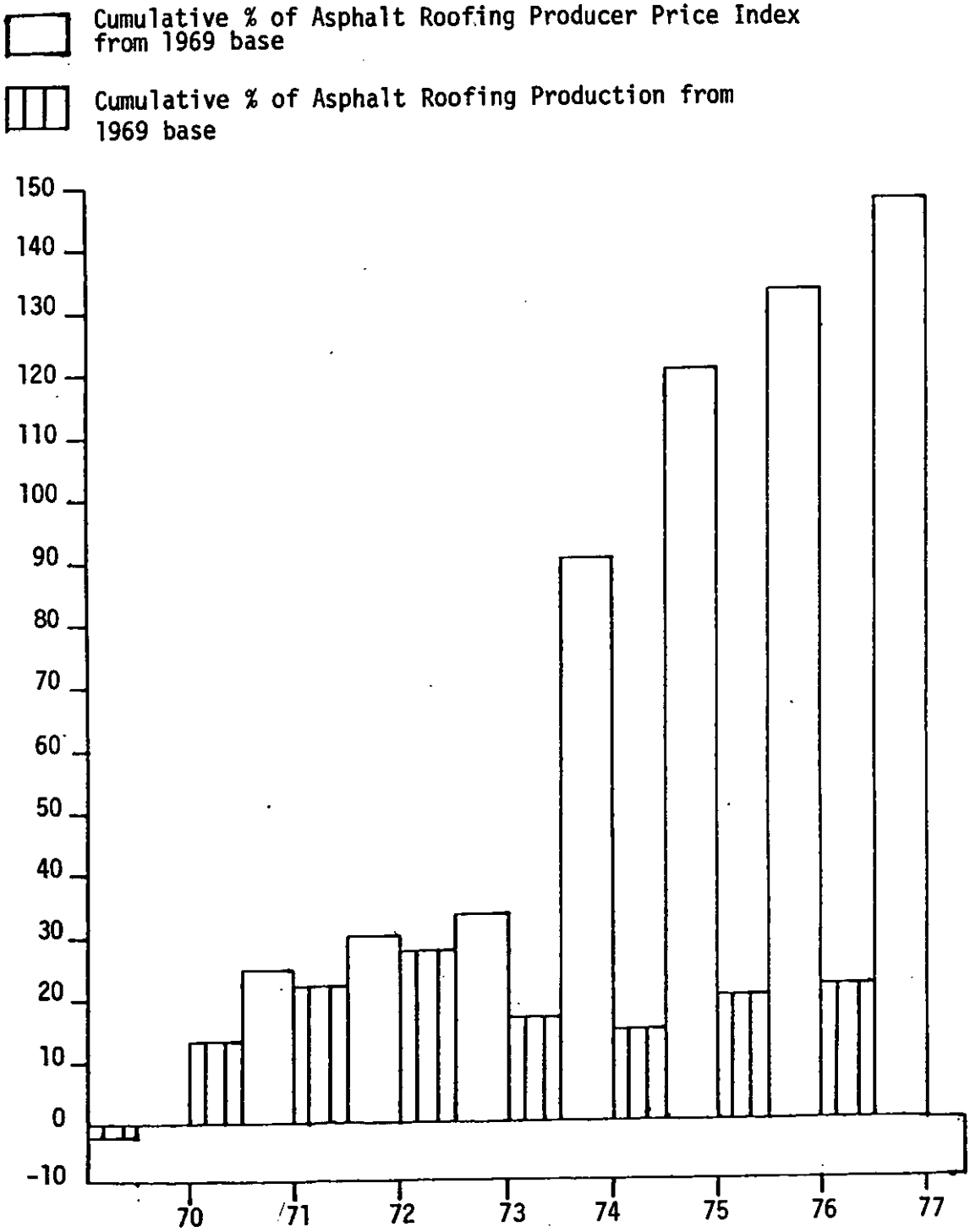

Figure 8-6. Relationship Between Price and Production
Source: Section 8.1

less than one percent of the cost of a new house, so that small increases in the price of shingles produce very small increases in total new housing costs.

The trend line for the production of asphalt roofing shows a 2 percent annual growth rate from 1969 to 1977.[63] This growth rate is likely to continue over the next 5 years for two reasons. First, the reroofing market (additions, alterations, and repairs) has been growing over recent years and should continue to generate firm demand for asphalt shingles. Second, demand for the new housing sector of the roofing market should be high. The population demographics are favorable for the housing market, particularly in the important 25- to 34-year-old age group. Also, housing has gained increased popularity as an inflation hedge.

To date, the changes in capacity that have been announced by industry indicate that supply should remain in line with demand. Therefore, over the next 5 years the relationship between supply and demand should be sufficiently balanced to permit manufacturers to pass through cost increases and maintain profits, as they have been able to do in the past when supply and demand has been in balance.

8.4.3.3 New Developments. A change that is taking place in the industry is the increased popularity of fiber glass, mat-based shingles. As fiber glass, mat-based shingles increase their market share, more companies are beginning to change from the production of felt to fiber glass. The market share of fiber glass, mat-based shingles has grown as follows:

1975	1976	1977	1978 (est.)
3.29%	4.45%	8.0%	12.0%

By 1980 ARMA expects fiber glass shingles to account for 20 percent of the market. By the early 1980's, industry members expect fiber glass shingles to account for 50 percent of the market, as discussed in Section 8.1.

Two reasons for the popularity of fiber glass mat shingles are their increased durability, 20 years of life versus 15 years for organic shingles, and their improved fire rating, Class A (the highest) versus Class C for organic shingles.[64]

Fiber glass mat shingles are currently about 5 percent more expensive than organic mat shingles; however, fiber glass mat shingles require approximately 12 percent less asphalt to produce, so that in the near future, as the cost of asphalt continues to rise, the 5 percent cost difference should be eliminated.[65,66]

The only difference in the manufacturing process between producing fiber glass mat shingles and organic mat shingles is that the fiber glass mat shingles bypass the saturating step in the production process. In this study the NSPS incremental costs and costs of production are those of the organic mat operations. This results in a conservative finding of NSPS impacts on fiber glass operations.

8.4.4 Methodology

This section will describe the methodology used to measure the economic impact of the NSPS on the asphalt roofing manufacturing industry. The principal economic impact that will be assessed is the effect of incremental costs of NSPS control on the profitability of new grassroots plants.

In the analysis which follows, each model asphalt roofing manufacturing plant will be evaluated as if it stands alone, i.e., the firm is not associated with any other business activity nor is it associated with any larger parent company. This assumption has the effect of isolating the control cost without any assistance from other business activities or firms.

Since each State Implementation Plan (SIP) contains particulate emission control standards, any new plant would have to meet SIP standards in the absence of a NSPS. Therefore, incremental NSPS control costs are the control costs over and above those baseline costs required to meet the various SIP standards.

Economic impact is evaluated on model plants whose description is based on representative characteristics of new roofing plants, such as production capabilities, asset size, and other financial measures. The model plants provide an indication of the degree of impact on all new plants in the industry by incorporating into the model the major characteristics prevailing in various size segments of the roofing industry.

They do not represent any particular existing plant, as any individual plant will differ in one or more of the above characteristecs.

The primary analytical technique employed in determining whether a capital investment should be accepted is discounted cash flow (DCF) analysis. Additionally, internal rate of return and playback will be calculated. DCF measures the discounted cash inflows over the life of an investment and compares them to the discounted cash outflows including the initial investment. If the sum of the discounted cash inflows is equal to, or greater than, the sum of the discounted cash outflows, the investment provides a return equal to, or greater than, the firm's cost of capital and the investment should be accepted. If the sum of the discounted cash inflows is less than the sum of the discounted cash outflows, the investment provides a return less than the firm's cost of capital and the investment should be rejected.

Cash flow is used because it is cash that is required to meet a firm's obligations regardless of how bright that firm's financial picture may be "on paper." Essentially, determining cash inflow involves calculating net earnings and adding depreciation, which is a non-cash expense.

All cash flows must be discounted to the present by use of an appropriate discount factor to enable comparison. The discount factor accounts for the time value of money, i.e., $1 today is worth more than $1 a year from today. In addition, the discount factor includes a return (profit) to the firm as compensation for bearing the risk that is inherent in the investment.

8.4.5 Critical Elements of the DCF

Calculations developed by the DCF method depend on the validity of the elements that comprise the DCF equation. These elements are:

1. project life;
2. depreciation;
3. hours of annual operation;
4. revenue and cost of manufacture;
5. control costs;
6. control cost passthrough versus control cost absorption; and
7. discount factor.

The project life of the investment is taken as 10 years, the useful life of most of the major pieces of production equipment found in the plants. Some of the equipment should last longer and the building should have a useful life of approximately 20 years. To the extent that buildings and equipment have a useful life longer than 10 years and no salvage value is included in the calculations, the 10-year choice is conservative.

Annual operation is assumed at 4,000 hours based on: 16 hours/day x 5 days/week x 50 weeks/year = 4,000 hours/year.

Annual revenue and cost of manufacture are assumed constant in the calculations. This assumption, made for simplicity of presentation, essentially assumes a constant profit margin over the project life. This is consistent with historical performance in that manufacturers, with minor variations, have typically been able to maintain their profit margins. Sensitivity analysis was performed in order to determine the effect of a possible decline in profit margins sustained over the entire 10 year life of the project that could result from price competition and/or an increase in costs. The sensitivity analysis evaluated the effect of a 10 percent decrease in profit margins. If the profit margins increase rather than decrease, the plant's financial position improves accordingly and NSPS controls become proportionately less costly.

Control costs are as shown previously and represent Regulatory Alternative 5.

Depreciation is calculated using the straight-line method. Depreciation could also be calculated using one of several accelerated methods that would have the effect of increasing paper expenses but decreasing tax payments and consequently increasing cash flow in the early years. Straight-line is used because it results in the most conservative discounted cash flow projections.

In the DCF analysis it is assumed that the control cost will be completely absorbed by the manufacturer with no cost passthrough in the form of higher prices. This represents a worst-case assumption.

A 10 percent discount factor is used. With a typical capital structure of 30 percent debt financing, 70 percent equity financing, and a 50 percent tax rate, the 10 percent discount factor represents a 10 percent

cost of debt and a 12 percent cost of equity, which is realistic for this industry.

	Capital structure		Capital costs		Tax rate	
Equity	70%	X	12%		N/A*	= 8.4
Debt	30%	X	10%	X	50%	= 1.5
						9.9 = 10% discount factor

In order to guard against the possibility that a 10 percent discount factor is too low, sensitivity analysis was performed using 15 percent as a discount factor, which would represent an increase in the cost of equity from 12 percent to 19.3 percent.

	Capital structure		Capital costs		Tax rate	
Equity	70%	X	19.3%		N/A*	= 13.5
Debt	30%	X	10.0%		50%	= 1.5
						15% discount factor

8.4.6 Data Sources

The following list provides the data sources for various aspects of the analysis:

1. average selling price - Section 8.1
2. costs - Section 8.2
3. debt to equity ratio - annual reports[131]
4. costs of debt capital - annual reports[131]
5. costs of equity capital - annual reports[131]
6. alternative control options - Section 8.2
7. sizes and operating hours - Section 8.2
8. depreciation schedules - Section 8.2 and Internal Revenue Code
9. investment tax credit - Internal Revenue Code
10. plant investment - Section 8.2

8.4.7 Plant Investment

For each of the three model plant sizes, the capital investment costs represent the total investment required to construct new model

---

*Not applicable.

asphalt roofing plants with a blowing still and to install a new baseline pollution control system, plus one of the air pollution control alternatives. These capital investment costs include direct costs, indirect costs, working capital, contractor's fee, and contingency. A detailed description of the costs was presented in Section 8.2.

8.4.8 Discounted Cash Flow Analysis

Tables 8-57, 8-58, and 8-59 show the DCF analysis for each of the three model plants. All dollars are constant end-of-1978 dollars. All cash flows occur at the end of each year. State income tax is not included because each State has its own particular rate, which would complicate the presentation; Texas, which is an important producer State, has no State income tax, and some States permit Federal income tax deductibility. Even if State taxes were included despite all these drawbacks, the results would be affected insignificantly.

1. Row 1, revenue of these tables, is calculated by multiplying the number of squares that the plant produces by the average selling price of one square. The average selling price of one square is taken to be $16.51. Annual operating time is considered to be 16 hours/day x 250 days/year = 4,000 hours/year. The revenue is assumed to be constant for each year.

2. Row 2, cost of manufacture, represents annualized costs (excluding interest, which is considered in the discount factor) as shown in Table 8-28 in Section 8.2. Cost of manufacture includes baseline control costs that would be required by SIP's irrespective of an NSPS. Costs vary according to plant size. Costs per square (the number of shingles to cover 100 square feet) for each plant (with blowing still) are:

a. small plant: $14.27 minus $0.56 interest = $13.71

b. medium plant: $13.42 minus $0.45 interest = $12.97

c. large plant: $13.00 minus $0.41 interest = $12.59

Annual operating time is the same 4,000 hours as noted above. Cost of manufacture is assumed to be constant for each year.

3. Row 3, control costs, is the incremental cost for most stringent control option.

4. Row 4, earnings before tax, is revenue minus costs (cost of manufacture and control costs).

TABLE 8-57. DCF FOR SMALL PLANT
(WITH BLOWING STILL)
($000's)

Row	Cost elements	1979	1980	1981	1982	1983	1984	1985	1986	1987	1988
1.	Revenue	17,005	17,005	...							17,005
2.	Costs	(14,124)	(14,124)	...							(14,124)
3.	Pollution control costs	(22)	(22)	...							(22)
4.	Earnings before interest and tax	2,859	2,859	...							2,859
5.	Federal income tax	(1,315)	(1,315)	...							(1,315)
6.	Investment tax credit	551	--	...							--
7.	Pollution control ITC	7	--	...							--
8.	Net earnings after tax	2,102	1,544	...							1,544
9.	Depreciation	776	776	...							776
10.	Pollution control depreciation	4	4	...							4
11.	Net cash flow	2,882	2,324	2,324	2,324	2,324	2,324	2,324	2,324	2,324	2,324
12.	Discount factor 10%	.90909	.82645	.75131	.68301	.62092	.56447	.51316	.46651	.42410	.38554
13.	Discounted cash flow	2,620	1,921	1,746	1,587	1,443	1,312	1,193	1,084	986	896
	Discounted inflow	14,788									
	Discounted outflow	(9,577)									
	NPV =	5,211									

TABLE 8-58. DCF FOR MEDIUM PLANT
(WITH BLOWING STILL)
($000's)

Row	Cost elements	1979	1980	1981	1982	1983	1984	1985	1986	1987	1988
1.	Revenue	34,010	34,010	...							34,010
2.	Costs	(26,712)	(26,712)	...							(26,712)
3.	Pollution control costs	(4)	(4)	...							(4)
4.	Earnings before interest and tax	7,302	7,302	...							7,302
5.	Federal income tax	(3,359)	(3,359)	...							(3,359)
6.	Investment tax credit	886	--	...							--
7.	Pollution control ITC	10	--	...							--
8.	Net earnings after tax	4,839	3,943	...							3,943
9.	Depreciation	1,235	1,235	...							1,235
10.	Pollution control depreciation	5	5	...							5
11.	Net cash flow	6,079	5,183	5,183	5,183	5,183	5,183	5,183	5,183	5,183	5,183
12.	Discount factor 10%	.90909	.82645	.75131	.68301	.62092	.56447	.51316	.46651	.42410	.38554
13.	Discounted cash flow	5,526	4,283	3,894	3,540	3,218	2,926	2,660	2,418	2,198	1,998
	Discounted inflow	32,661									
	Discounted outflow	(15,589)									
	NPV =	17,072									

TABLE 8-59. DCF FOR LARGE PLANT
(WITH BLOWING STILL)
($000's)

Row	Cost elements	1979	1980	1981	1982	1983	1984	1985	1986	1987	1988
1.	Revenue	43,586	43,586	...							43,586
2.	Costs	(33,235)	(33,235)	...							(33,235)
3.	Pollution control costs	(38)	(38)	...							(38)
4.	Earnings before interest and tax	10,313	10,313	...							10,313
5.	Federal income tax	(4,744)	(4,744)	...							(4,744)
6.	Investment tax credit	1,019	--	...							--
7.	Pollution control ITC	9	--	...							--
8.	Net earnings after tax	6,597	5,569	...							5,569
9.	Depreciation	1,432	1,432	...							1,432
10.	Pollution control depreciation	5	5	...							5
11.	Net cash flow	8,034	7,006	7,006	7,006	7,006	7,006	7,006	7,006	7,006	7,006
12.	Discount factor 10%	.90909	.82645	.75131	.68301	.62092	.56447	.51316	.46651	.42410	.38554
13.	Discounted cash flow	7,304	5,790	5,264	4,785	4,350	3,955	3,595	3,268	2,985	2,701
	Discounted inflow	43,997									
	Discounted outflow	(18,338)									
	NPV =	25,609									

5. Row 5, tax liability, is calculated by multiplying earnings before tax by the marginal Federal corporate income tax rate, which is currently 46 percent.

6. Row 6, investment tax credit (ITC), considers the 10 percent investment tax credit, which acts to reduce the tax liability of the plant (total direct investment plus blowing still plus baseline controls less building) by 10 percent.

7. Row 7 is the control investment tax credit for NSPS controls.

8. Row 8, net earnings after tax, represents earnings before tax minus tax liability plus investment tax credit. For example:

Net earnings before tax	$100
Less tax liability	-46
Plus investment tax credit	+10
	$64

9. Row 9, depreciation, is an non-cash expense and, as such, is added to net earnings after tax for the purpose of determining cash flow. Depreciation is calculated using the straight-line method.

10. Row 10, control depreciation, represents depreciation of the most stringent regulatory control option and is calculated using the straight-line method for 20 years, which is conservative.

11. Row 11, net cash flow, is the result of adding net earnings after tax and depreciation.

12. Row 12, discount factor, shows the present value of a dollar of future cash flow for each future year. The discount factor used is 10 percent, which represents the weighted average cost of capital.

13. Row 13 is the discounted cash flows. After the annual cash inflows are discounted, they are summed to derive the present value of the cash inflows over the life of the project. The discounted cash inflows are then compared to the sum of the discounted cash outflows. The difference is the net present value (NPV).

8.4.9 Findings

8.4.9.1 Control Affordability

1. DCF - The results of the discounted cash flow analysis from Tables 8-59, 8-60, and 8-61 show that all three model plants have a positive NPV. The small plant has an NPV of $5,211,000; the medium plant

has an NPV of $17,072,000; and the large plant has an NPV of $25,609,000. The positive NPV means that after including the 10 percent required return, the investment yields an additional amount over the project life expressed in today's dollars.

2. IRR - A second financial test shows that the internal rate of return for each of the model plant sizes is 21 percent for the small plant, 31 percent for the medium plant, and 37 percent for the large plant.

3. Paybacks - Additionally, the cash flow projections for the small, medium, and large model plants indicate a payback period of 4 years, 3 years, and 2-1/2 years, respectively, an attractive payback period for most manufacturing operations. A less-than-5-year payback also meets an investment criterion explicitly published by one member of the industry.[66]

Since the above tests indicate that each of the three model plants remains a profitable investment after the addition of the most stringent regulatory control option in the absence of cost passthrough, it can be assumed that this addition will not exert a significant economic impact.

Several secondary indicators also sustain this finding:

1. Sensitivity analysis for the DCF - This was performed on the profit margin for the small plant by reducing the profit margin by 10 percent and recalculating the NPV. The NPV remained positive by $4,258,000. An additional sensitivity analysis was performed by changing the discount factor from 10 to 15 percent and recalculating the NPV. Here again, the NPV remained positive by $2,572,000 for the small plant.

2. Percent increase in selling price - The most stringent regulatory control option will add a maximum of $0.021 to a selling price of $16.51 per square, or approximately 0.1 percent. This can be compared to cost push price increases of 39.3 percent, or $3.26 per square in 1974, or more recently an average annual increase of 9 percent from 1975-1977.

3. Control cost passthrough vs. absorption - In the DCF, it is assumed that the control cost will have to be completely absorbed by the manufacturer with no cost passthrough in the form of higher prices. This represents a worst-case assumption because the demand is inelastic over a considerable range. The industry has an approximate after-tax profit on sales of 5.7 percent. To the extent that control costs could be either

partially or completely passed through, the financial performance of the model plants would improve.

In addition to these quantitative indicators, some additional insight into industrial viability can be gained by examining the actions of companies in the industry. Large, sophisticated firms perceive the industry as attractive to new investment, and several entrenched firms in the industry are extending their operations. Several examples include:

1. Georgia Pacific opened its first roofing plant in Franklin, Ohio, in 1978. Construction was also begun on a new roofing plant at Quakertown, Pennsylvania, and plans were announced for a third roofing plant to be located near Atlanta, Georgia.

2. GAF Corporation is building a new roofing plant in Fontana, California, that will go into operation in 1980; it will be the company's fourteenth roofing plant.

3. CertainTeed Corporation opened a new roofing plant in Oxford, North Carolina, in March of 1978.

4. Owens-Corning Fiberglas Corporation purchased Lloyd A. Fry Company and Trumball Asphalt Company for approximately $180,000,000 in cash in 1977.

8.4.9.2 Capital Availability for Control Systems. The necessary capital is likely to be available to companies for the purchase of control equipment.

The total capital required to meet NSPS for a small model plant would add $71,000 to an initial investment of $9,506,000, a 0.7 percent increase. The figure for medium and large plants is 0.7 percent and 0.5 percent, respectively. This increase in the initial investment is not likely to seriously alter the capital availability situation for a company which otherwise can obtain the necessary capital.

The majority of the companies that are entering the industry for the first time or expanding an existing position in the industry are major, publicly held corporations that provide improved access to the financial markets as well as considerable internal financial strength and business sophistication. These publicly held companies have debt-to-equity ratios of approximately 30 percent, which is indicative of reserve borrowing power.

Finally, a variety of special pollution control financing arrangements are available to new asphalt roofing manufacturing plants, such as low interest bank loans, SBA loans, and Industrial Development Bonds. These sources of funds generally provide loan rates and repayment terms more favorable than general industrial borrowing.

8.4.10 Affected Facilities in Other Locations. An integrated asphalt roofing plant includes an asphalt blowing operation. There are approximately 24 plants where the asphalt blowing operation, although physically adjacent to the roofing plant, was a separate corporate entity. These units have since been purchased by one company and are thus considered integrated roofing plants. Blowing stills are also installed in petroleum refineries and, in very rare occasions, as production units without ties to either a refinery or a roofing plant. Control costs for new stills in refineries will have no more economic impact than those in roofing plants. The control equipment is the same, and any captured pollutants can be recycled to the refining process.

The installation of a new blowing still in an asphalt processing plant should result in the same increase in annualized costs as for the refinery or roofing plant. The control equipment would be the same as is presently used. The increase in fuel usage required under NSPS would be one cubic meter of oil for each 488 megagrams of asphalt processed (one barrel of oil for each 85.5 tons of asphalt processed).

8.5 SOCIO-ECONOMIC IMPACT ASSESSMENT

The purpose of Section 8.5 is to address those tests of macroeconomic impact as presented in Executive Order 12044 and, more generally, to assess any other significant macroeconomic impacts that may result from the NSPS.

The economic impact assessment is concerned only with the costs or negative impacts of the NSPS. The NSPS will also result in benefits or positive impacts, such as cleaner air and improved health for the population, potential increases in worker productivity, increased business for the pollution control manufacturing industry, and so forth. However, the NSPS benefits will not be discussed here.

8.5.1 Executive Order 12044

Executive Order 12044 provides several criteria for a determination of major economic impact. Those criteria are:

1. Additional annualized costs of compliance that, including capital charges (interest and depreciation), will total $100 million (a) within any one of the first 5 years of implementation (normally in the fifth year for NSPS), or (b) if applicable, within any calendar year up to the date by which the law requires attainment of the relevant pollution standard.

2. Total additional cost of production of any major industry product or service will exceed 5 percent of the selling price of the product.

3. Net national energy consumption will increase by the equivalent of 25,000 barrels of oil per day.

4. Additional annual demand will increase or annual supply will decrease by more than 3 percent for any of the following materials by the attainment date, if applicable, or within 5 years of implementation: plate steel, tubular steel, stainless steel, scrap steel, aluminum, copper, manganese, magnesium, zinc, ethylene, ethylene glycol, liquified petroleum gases, ammonia, urea, plastics, synthetic rubber, or pulp.

The asphalt roofing NSPS will not trigger any of the above four criteria.

1. The NSPS will not add to the annualized costs for a new medium plant. There are three new medium plants projected to be built over the next 5 years (annualized costs for a small and large plant are $22,000 and $38,000, respectively). This is compared to a $100 million trigger.

2. The NSPS will add a maximum of 0.1 percent to the selling price of the product. This potential increase is far below the 5 percent trigger.

3. The NSPS will lead to an increase in oil consumption of 124 barrels per day. This 124-barrels-per-day increase compares to a 25,000-barrels-per-day increase for use as a trigger.

4. The NSPS will result in no perceptible change in demand or supply. Executive Order 12044 states that a change of 3 percent or more should be used as a trigger.

Additionally, both the small dollar cost of the NSPS controls and the inherent economics of the industry, such as its geographical diversification, lack of an import or export market, et al., preclude the possibility of significant macroeconomic impacts, either on a regional or on a national basis. The NSPS will not aggravate national inflation, disrupt regional or national employment patterns, or change the U.S. balance of payments position.

8.6 REFERENCES FOR CHAPTER 8

1. Asphalt Roofing Manufacturers Association. Manufacture, Selection and Application of Asphalt Roofing and Siding Products. 10th ed. New York, N.Y. 1970. p. 5.

2. Ref. 1, p. 3.

3. Barth, E. J. Asphalt-Science and Technology. New York, Gordon and Breach, 1962. p. 425-427.

4. Ref. 1, p. 13, 14.

5. Letter and attachment from Quaranta, J., CertainTeed Products Corporation, to Noble, E. A., EPA/ESED. September 8, 1975. Supplemental information for 114 response.

6. Letter and attachments from Hambrick, M. M., Celotex, to Goodwin, D. R., EPA/ESED. May 30, 1975. Information on plants at Goldsboro, N.C. Los Angeles, Calif. and Cincinnati, Ohio.

7. Ref. 1, p. 41a.

8. Ref. 1, p. 15.

9. Asphalt Roofing Manufacturers Association. List of Plants: Asphalt and Tarred Roofing Manufacturers. New York, N.Y. May 12, 1978. 4 p.

10. U.S. Census of Manufactures. Volume II. U.S. Department of Commerce. Washington, D.C. Census for 1954, 1958, 1963, 1967, and 1972.

11. Asphalt and Tar Roofing and Siding Products. U.S. Department of Commerce. Washington, D.C. Series M-29A. Summaries for 1969, 1970, 1971, 1972, 1973, 1974, 1975, 1976, and 1977.

12. Mineral Industry Surveys: Petroleum Statement, Annual. U.S. Department of Interior. Washington, D.C. Summaries for 1969, 1971, 1973, and 1975.

13. Energy Data Reports: P. A. D. Districts Supply/Demand, Annual. U.S. Department of Energy. Washington, D.C. Final Summaries for 1976 and 1977.

14. Evans, J. V. Asphalt. In: Kirk-Othmer Encyclopedia of Chemical Technology, Volume 3, 3rd edition, Mark, H. F., et al. (ed.). New York, John Wiley & Sons, 1978.

15. Cantrell, A. Annual Refining Survey. The Oil and Gas Journal. 76(12):108-146. March 20, 1978.

16. Annual Survey of Manufactures: Industry Profiles. U.S. Department of Commerce. Washington, D.C. M(AS). Surveys for 1969, 1970, 1971, and 1976.

17. Ref.1, p. 1.

18. U.S. General Imports: Schedule A Commodity Groupings by World Area. U.S. Department of Commerce. Washington, D.C. FT 150/Annual 1973 and FT 150/Annual 1977. October 1974 and July 1978.

19. U.S. Exports: Schedule B Commodity Groupings by World Area. U.S. Department of Commerce. Washington, D.C. FT 450/Annual 1973 and FT 450/Annual 1977. June 1974 and June 1978.

20. Handbook of Labor Statistics 1977. U.S. Department of Labor. Washington, D.C. Bulletin 1966. 1977.

21. Monthly Labor Review. U.S. Department of Labor. Washington, D.C. Volume 102, Number 2. February 1979.

22. Statistical Abstract of the United States. U.S. Bureau of Census. Washington, D.C. Abstracts for 1970, 1971, 1972, 1973, 1974, 1975, 1976, 1977, and 1978.

23. Telecon. North Carolina Asphalt Roofing Distributor with Antel, D., MRI/NC. March 7, 1979. Prices of asphalt roofing shingles.

24. Cantrell, A. Annual Refining Survey. The Oil and Gas Journal. p. 97-123. March 28, 1977.

25. Telecon. Merz, S., Celotex Corporation, with Cooper, R., MRI/NC. March 8, 1979. Prices of dry materials for asphalt roofing plants.

26. Telecon. Lambert, D., Exxon Corporation, with Antel, D., MRI/NC. March 8, 1979. Prices of asphalt.

27. Economic Indicators. Chemical Engineering. 86(6):7. March 12, 1979.

28. Franzblau and Fitzsimmons, Inc. Revised Proposal for Asphalt Roofing Plant. Submitted to the Flintkote Company. Proposal No. 245. Kearny, N.J. October 19, 1973.

29. Economic Indicators. Chemical Engineering. 86(4):7. February 12, 1979.

30. Telecon. Lambert, D., Exxon Company, with Antel, D., MRI/NC. March 8, 1979. Prices of asphalt.

31. Telecon. Clarke, S., CertainTeed Corporation, with Antel, D., MRI/NC. March 30, 1979. Felt costs.

32. Telecon. Merz, S., Celotex Corporation, with Cooper, R., MRI/NC. March 8, 1979. Dry materials price for asphalt roofing plants.

33. Employment and Earnings, February 1979. U.S. Department of Labor. Washington, D.C. Vol. 26, No. 2. February 1979.

34. Telecon. Representative of Kansas City, Missouri, Water Department with Kelso, G., MRI/KC. April 19, 1979. Cost of water in Kansas City, Mo.

35. Retail Prices and Indexes of Fuels and Utilities, Residential Usage. U.S. Department of Labor. Washington, D.C. June 1978.

36. Monthly Labor Review. U.S. Department of Labor. Washington, D.C. Vol. 102, No. 3. March 1979.

37. Survey of Current Business. U.S. Department of Commerce. Washington, D.C. Vol. 59, No. 3. March 1979.

38. Asphalt Roofing Manufacturers' Association. Manufacture, Selection, and Application of Asphalt Roofing and Siding Products. 12th ed. New York, N.Y. 1974.

39. Calculations for Chapter 8, Section 8.2.2.2.

40. Air Pollution Control Technology and Costs: Seven Selected Emission Sources. U.S. Environmental Protection Agency. Research Triangle Park, N.C. PB-245 065. December 1974.

41. Capital and Operating Costs of Selected Air Pollution Control Systems. U.S. Environmental Protection Agency. Research Triangle Park, N.C. EPA-450/376014. May 1976.

42. Perry, R. H., and C. H. Chilton. Chemical Engineers' Handbook. 5th ed. New York, McGraw-Hill Book Company, 1973.

43. Economic Indicators. Chemical Engineering. 86:(7):7. March 26, 1979.

44. Capital and Operating Costs of Pollution Control Equipment Modules - Vol. II - Data Manual. U.S. Environmental Protection Agency. Washington, D.C. EPA-R573023b. July 1973.

45. Development of Cost Chapter for Control Techniques Document (CID) for Asphalt Roofing Industries. U.S. Environmental Protection Agency. Research Triangle Park, N.C. Contract No. 68022842. November 1977. 15 p.

46. Economic Indicators. Chemical Engineering. 85:(15):7. July 17, 1978.

47. Nonmetallic Minerals Industries Control Equipment Costs. U.S. Environmental Protection Agency. Research Triangle Park, N.C. EPA-68021473. February 1977.

48. Economic Indicators. Chemical Engineering. 85:(4):7. February 13, 1978.

49. Sprackland, T. Oil Scramble Could Jolt East's Prices. Energy User News. 4:(3):1. January 15, 1979.

50. Perry, R. H., and C. H. Chilton. Chemical Engineers' Handbook. 4th ed. New York, McGraw-Hill Book Company, 1963.

51. Development Document for Proposed Effluent Limitations Guidelines and New Source Performance Standards for the Paving and Roofing Materials (Tars and Asphalt). U.S. Environmental Protection Agency. EPA 440/174/049, Group II. December 1974.

52. Memo from Shea, E. P., MRI/NC, to Noble, E. A., EPA/ISB. March 29, 1979. Report on trip to CertainTeed plant, Oxford, N.C.

53. Memo from Shea, E. P., MRI/NC, to Noble, E. A., EPA/ISB. April 3, 1979. Report on trip to Flintkote plant, Peachtree, Ga.

54. Memo from Shea, E. P., MRI/NC, to Noble, E. A., EPA/ISB. April 23, 1979. Minutes of meeting with representatives of OwensCorning.

55. Memo from Shea, E. P., MRI/NC, to 4654L Project File. May 15, 1979. OSHA inspection of Flintkote plant, Peachtree, Ga.

56. Texas Clean Air Act. Regulation 6, Control of Air Pollution by Permits for New Construction or Modification. Section 131.08. May 6, 1979.

57. New Jersey Administrative Code. Title 7, Chapter 27, Subchapter 6, 7:2716.10. Permit to Construct and Certificate to Operate. New Jersey State Department of Environmental Protection. March 1, 1976.

58. Regulation 2. Division 13, Permits. Bay Area Air Pollution Control District. February 1975. p. 5859.

59. 1978 Annual Reports for Bird & Son, Inc.; CertainTeed Corporation; Flintkote, Inc.; GAF Corporation; Georgia-Pacific Corporation; Johns-Manville, Inc.; Koppers Company; Masonite Corporation; Owens-Corning Fiberglas Corporation; U.S. Gypsum; and Jim Walter Corporation.

60. Initial Decision in the Matter of Jim Walter, a Corporation. In: United States of America before the Federal Trade Commission, Docket No. 8986. May 6, 1976.

61. 1977 Statistical Abstract of the United States. U.S. Bureau of Census. Washington, D.C. September 1977.

62. 1978 Annual Report: GAF Corporation.

63. Goldfarb, J. Prospects for the Residential Roofing Market. Merrill Lynch Pierce Fenner and Smith, Inc. [Presented at 1979 Papermaker's Conference of the Technical Association of the Pulp and Paper Industry (TAPPI)]. Boston. April 10, 1979.

64. Fiber Glass Shingles Grab Bigger Share of the Roofing Market. Professional Builder Apartment Business. Vol. II. August 1979.

65. Telecon. Taylor, M. R., JACA with Cotts, R. CertainTeed. May 3, 1979. Concerning the Company's plans for the use of fiber glass.

66. 1978 Annual Report: Koppers Company, Inc.

APPENDIX A. EVOLUTION OF THE PROPOSED STANDARD

In June 1974, the United States Environmental Protection Agency initiated a screening study of the asphalt roofing manufacturing (ARM) industry. Based upon the results of the screening study conducted in July 1974, a study to develop the Background Information Document was initiated for the ARM category.

In July 1974 a literature survey was begun, and state and regional air pollution control agencies and the industry were canvassed by telephone and mail to obtain information on plant operations and to determine which plants, if any, appeared to be well controlled. Plant visits were then scheduled to those plants which appeared, from the survey information, to be the best controlled. The purpose of the plant visits was to obtain information on process details, quantitites of emissions, and emission control equipment. The feasibility of conducting future emission testing was also determined during the plant visits.

Significant events relating to the evolution of the Background Information Document for ARM are itemized in the chronology below.

A.1 CHRONOLOGY

The important events which have occurred in the development of the Background Information Document for Asphalt Roofing Manufacturing are depicted below in chronological order.

Date	Activity
May 31, 1974	Project start date. Contract awarded to MRI.
July 16, 1974	Literature and telephone surveys initiated.
July 17, 1974	Letters requesting information mailed to Texas Air Control Board; LAAPCD; Bird and Son, Inc.; Maryland Division of Air Quality; CertainTeed; Johns-Manville; Commercial Testing and Engineering; and Valentine, Fisher, and Tomlinson.
August 14, 1974	Plant visit to GAF asphalt roofing plant, Kansas City, Missouri.
August 14, 1974	Plant visit to CertainTeed asphalt roofing plant, Kansas City, Missouri.
October 24, 1974	Plant visit to Celotex asphalt roofing plant, Goldsboro, North Carolina.
October 25, 1974	Plant visit to Johns-Manville asphalt roofing plant, Savannah, Georgia.
November 5, 1974	Plant visit to Lloyd A. Fry asphalt roofing plant, Portland, Oregon.
November 5, 1974	Plant visit to Bird and Son asphalt roofing plant, Portland, Oregon.
November 6, 1974	Plant visit to Malarkey asphalt roofing plant, Portland, Oregon.
November 8, 1974	Plant visit to Bird and Son asphalt roofing plant, Portland, Oregon.
November 11, 1974	Plant visit to Flintkote asphalt roofing plant, Los Angeles, California.
November 11, 1974	Plant visit to Celotex asphalt roofing plant, Los Angeles, California.
November 12, 1974	Plant visit to Johns-Manville asphalt roofing plant, Los Angeles, California.
November 25, 1974	Plant visit to Johns-Manville asphalt roofing plant, Waukegan, Illinois.
November 26, 1974	Plant visit to CertainTeed asphalt roofing plant, Chicago Heights, Illinois.

Date	Activity
November 27, 1974	Plant visit to Lloyd A. Fry asphalt roofing plant, Summit, Illinois.
December 17, 1974	Plant visit to Celotex asphalt roofing plant, Cincinnati, Ohio.
March 10-13, 1975	Emission test at Celotex asphalt roofing plant, Goldsboro, North Carolina.
April 9, 1975	Preliminary model plants submitted to Economics Analysis Branch (EAB).
April 22, 1975	Section 114 letters mailed to CertainTeed; Lloyd A.Fry; GAF; Bird and Son; Celotex; Flintkote; Johns-Manville; Trumbull; and Douglas Oil.
May 1, 1975	Pretest survey of Johns-Manville asphalt roofing plant, Waukegan, Illinois.
May 6, 1975	Pretest survey of CertainTeed asphalt roofing plant, Chicago Heights, Illinois.
May 13, 1975	Plant visit to Bird and Son asphalt roofing plant, Portland, Oregon.
May 14, 1975	Plant visit to Bird and Son asphalt roofing plant, Wilmington, California.
May 15, 1975	Pretest survey of Celotex asphalt roofing plant, Los Angeles, California.
May 15, 1975	Pretest survey of Johns-Manville asphalt roofing plant, Los Angeles, California.
May 28, 1975	Plant visit to CertainTeed asphalt roofing plant, Shakopee, Minnesota.
June 3, 1975	Pretest survey to Elk Roofing asphalt roofing plant, Stephens, Arkansas.
June 4 & 5, 1975	Pretest survey to Celotex asphalt roofing plant, Fairfield, Alabama.
June 12 & 13, 1975	Emission test at Celotex asphalt roofing plant, Cincinnati, Ohio.
June 17, 1975	Pretest survey of CertainTeed asphalt roofing plant, Shakopee, Minnesota.

Date	Activity
July 22 & 23, 1975	Visible emission test conducted at CertainTeed asphalt roofing plant, Chicago Heights, Illinois.
August 8, 1975	Plant visit to Celotex asphalt roofing plant, Fairfield, Alabama.
August 18-27, 1975	Emission tests on asphalt blowing operation at Elk Roofing, Stephens, Arkansas.
September 9-13, 1975	Emission test at CertainTeed asphalt roofing plant, Shakopee, Minnesota.
September 16-19, 1975	Emission test at Johns-Manville asphalt roofing plant, Waukegan, Illinois.
October 6-10, 1975	Emission test at Celotex asphalt roofing plant, Fairfield, Alabama.
October 20-24, 1975	Emission test at Celotex asphalt roofing plant, Los Angeles, California.
February 1, 1977	Effort begun to locate additional well-controlled blowing stills for testing.
March 1, 1977, and March 17, 1977	Section 114 letters requesting additional information on asphalt blowing mailed to GAF; Chevron, USA; Exxon; Jim Walters; Global Oil; Douglas Oil; and Trumbull Oil.
March 31, 1977	Plant visit to Lundy-Thagard Oil asphalt blowing operation, Southgate, California.
April 1, 1977	Plant visit to Douglas Oil asphalt blowing operation, Paramount, California.
April 1, 1977	Plant visit to Hirt Combustion Engineers, Montebello, California.
April 5, 1977	Plant visit to Trumbull Asphalt asphalt blowing operation, Martinez, California.
April 5, 1977	Plant visit to Global Oil asphalt blowing operation, Pittsburgh, California.
April 6, 1977	Plant visit to Chevron, USA, Asphalt Division, asphalt blowing operation, Portland, Oregon.

Date	Activity
April, 1977	Report. Impact of NSPS on 1985 National Emissions from Stationary Sources; The Research Council of New England.
April, 1978	Report. Priorities for NSPS under the Clean Air Act Amendments of 1977; Argonne National Laboratory.
December 13, 1978	Plant visit to Celotex asphalt roofing plant, Goldsboro, North Carolina.
January 18, 1979	Plant visit to GAF asphalt roofing plant, Kansas City, Missouri.
January 18, 1979	Plant visit to CertainTeed asphalt roofing plant, Kansas City, Missouri.
March 19, 1979	Plant visit to CertainTeed asphalt roofing plant, Oxford, North Carolina.
March 23, 1979	Section 114 letters sent to CertainTeed and Flintkote.
March 27, 1979	Plant visit to Flintkote asphalt roofing plant, Peachtree City, Georgia.
April 4, 1979	Meeting with Owens-Corning Fiberglas Corporation to discuss status of plants recently acquired from Lloyd A. Fry, Inc.
May 1, 1979	Section 114 letter to Owens-Corning Fiberglas Corporation.
November 15, 1979	EPA Working Group.
December 12, 1979	National Air Pollution Control Technical Advisory Committee (NAPCTAC).
January 10, 1980	Meeting with Asphalt Roofing Manufacturers Association (ARMA) and industry representatives.
February 21, 1980	EPA Steering Committee meeting (consent agenda).

APPENDIX B

INDEX TO ENVIRONMENTAL IMPACT CONSIDERATIONS

This appendix consists of a reference system, cross-indexed with the October 21, 1974 FEDERAL REGISTER (39 FR 37419) containing the Agency guidelines concerning the preparation of Environmental Impact Statements. This index can be used to identify sections of the document which contain data and information germane to any portion of the FEDERAL REGISTER guidelines.

Appendix B

CROSS-INDEXED REFERENCE SYSTEM TO HIGHLIGHT ENVIRONMENTAL IMPACT PORTIONS OF THE DOCUMENT

Agency Guidelines for Preparing Regulatory Action Environmental Impact Statements (39 FR 37419)	Location Within the Background Information Document
1. Background and Description of Regulatory Alternatives	
Summary of Regulatory Alternatives	The regulatory alternatives are summarized in Chapter 1, Section 1.1.
Statutory Basis for the Regulatory Alternatives	The statutory basis for the regulatory alternatives is summarized in Chapter 2.
Relationship to Other Regulatory Agency Actions	The relationships between the regulatory alternatives and other regulatory agency actions are summarized in Chapter 8, Section 8.3.
Industry Affected by the Regulatory Alternatives	A discussion of the industry affected by the alternatives is presented in Chapter 3, Section 3.1. Further details covering the business and economic nature of the industry are presented in Chapter 8, Section 8.1.
Specific Processes Affected by the Regulatory Alternatives	The specific processes and facilities affected by the regulatory alternatives are summarized in Chapter 1, Section 1.1. A detailed technical discussion of the processes affected by the regulatory alternatives is presented in Chapter 3, Section 3.2.

Appendix B

CROSS-INDEXED REFERENCE SYSTEM TO HIGHLIGHT ENVIRONMENTAL IMPACT PORTIONS OF THE DOCUMENT (continued)

Agency Guidelines for Preparing Regulatory Action Environmental Impact Statements (39 FR 37419)	Location Within the Background Information Document
2. Control Techniques and Regulatory Alternatives	
Control Techniques	The alternative control techniques are discussed in Chapter 4, Sections 4.2 and 4.3.
Regulatory Alternatives	The various regulatory alternatives including "no additional regulatory action" are defined in Chapter 6, Section 6.2. A summary of the major alternatives considered is included in Chapter 1, Section 1.3.
3. Environmental Impact of the Regulatory Alternatives	
Primary Impacts Directly Attributable to the Alternatives	The primary impacts on mass emissions and ambient air quality due to the alternative control systems are discussed in Chapter 7, sections 7.1, 7.2, 7.3, 7.4, and 7.5. A matrix summarizing the environmental and economic impacts of the regulatory alternatives is included in Chapter 1.
Secondary or Induced Impacts	Secondary impacts for the various regulatory alternatives are discussed in Chapter 7, Sections 7.1, 7.2, 7.3, 7.4, and 7.5.

Appendix B

CROSS-INDEXED REFERENCE SYSTEM TO HIGHLIGHT ENVIRONMENTAL IMPACT PORTIONS OF THE DOCUMENT (concluded)

Agency Guidelines for Preparing Regulatory Action Environmental Impact Statements (39 FR 37419)	Location Within the Background Information Document
4. Other Considerations	A summary of the potential adverse environmental impacts associated with the regulatory alternatives is included in Chapter 1, Section 1.2 and Chapter 7. Potential socio-economic and inflationary impacts are discussed in Chapter 8, Section 8.5. Irreversible and irretrievable commitments of resources are discussed in Chapter 7, Section 7.6.

APPENDIX C. SUMMARY OF TEST DATA

C.1 INTRODUCTION

The asphalt roofing manufacturing industry was surveyed by EPA personnel to identify those plants and facilities at which to conduct tests to evaluate techniques for controlling particulate emissions related to processes in the asphalt roofing industry. Several plants were selected and tested for organic particulate emissions. Since many of the mineral handling and storage operations for limestone, traprock, and mica at asphalt roofing plants are similar to the screening, conveying, and storage of mineral products at non-metallic mineral processing plants, it was decided to transfer selected control technology for inorganic particulate from this industry to the asphalt roofing manufacturing industry. This appendix contains emission test data obtained from asphalt roofing plants and selected emission test data obtained from non-metallic mineral processing plants.

C.2 EMISSION TEST PROGRAM FOR MANUFACTURE OF ASPHALT ROOFING

A source testing program was undertaken by EPA personnel to evaluate techniques for controlling particulate emissions related to processes in the asphalt roofing manufacturing industry. Plant process facilities tested included asphalt storage tanks, blowing stills, saturators, and coaters. These tests included sampling and analyses of particulate, polycyclic organic matter (POM), hydrocarbons (HC), SO_2, NO_x, aldehydes, and CO. In this appendix, the facilities tested and the test methods used are identified. The results of emission tests and visible emission observations, as well as the characteristics of exhaust gas streams, are summarized in Tables C-1 to C-23 and Figures C-1 to C-9. The individual sections of the processing equipment which are controlled and the type of

control device, or devices, for each plant tested are also discussed later in this appendix.

Particulate sampling was conducted using the EPA Test Method 26 for asphalt roofing plants. Outlet gaseous hydrocarbon measurements were made using a flame-ionization detector (FID) by monitoring the gas sampled in the EPA Method 26 train at a point between the filter and the first impinger. Continuous measurements of NO_x and SO_2 concentration levels were made using a Dynascience* electrochemical SO_2 analyzer. Total POM was measured utilizing the EPA Method 26 train in conjunction with a POM collection column developed by Battelle Columbus Laboratory (BCL). EPA Reference Method 3 was used for Orsat analysis. Analysis of CO_2 and O_2 was by Orsat; CO concentration was determined by Nondispersive Infrared (NDIR) measurements. Determinations of aldehyde concentration were made utilizing the Los Angeles Wet Chemistry Method.

Visible emission observations were made at the exhaust of each of the control devices in accordance with procedures recommended in EPA Reference Method 9 for visual determination of the opacity of emissions from stationary sources.

Fugitive emissions were read at the points specified in the tables and figures. An attempt was made to quantify the fugitive emissions by recording the duration and intensity of the emissions from the sources.

C.2.1 Description of Asphalt Roofing Manufacturing Facilities Tested

C.2.1.1 Facility A. Facility A was operating the shingle manufacturing line at a production rate of 27.85 Mg/h (30.7 tons/h) during the emission tests. Emission sources sampled on the shingle manufacturing line included: dip-type saturator, drying-in drum section, wet looper, and coater. All of these sources were ducted via a manifold to two modular electrostatic precipitators (ESP).

Visible emissions were observed at the exhaust of each of the two ESP stacks. Fugitive emissions were observed at the saturator section, at the drying-in drum section, and at the coating section of the production

---

*Mention of a specific company or product does not constitute endorsement by the United States Environmental Protection Agency.

line. Particulates, HC, and POM were measured at the inlet and outlet of the ESP's.

The results of the emission tests at Facility A are contained in Figure C-1 and in Tables C-1 to C-3a.

C.2.1.2 Facility B. The production rate of the shingle manufacturing line at Facility B was 37.0 Mg/h (40.8 tons/h) during the emission test program. Emission sources sampled on the shingle manufacturing line at Facility B included the dip-type saturator, drying-in section, and coater. All of the sources were controlled by two afterburner units. One of these units (Unit 2) also controlled emissions from a surge tank and six asphalt storage tanks.

Visible emissions were recorded for each of the two afterburner outlet stacks, and fugitive emissions escaping the capture hoods were recorded for the saturator area of the asphalt production line. Emissions were measured for particulates, HC, gas composition, NO_x, SO_2, aldehydes, and POM.

Results of the emission tests at Facility B are given in Figure C-2 and in Tables C-4 to C-9.

C.2.1.3 Facility C. The shingle production rate at Facility C during the emission tests was 26.31 Mg/h (29.0 tons/h). Emission sources tested were the spray-dip saturator, drying-in section, wet looper, and the coater. All of these sources were controlled by a high velocity air filtration (HVAF) unit. The same HVAF unit also controlled emissions from the main asphalt storage tank and seven process storage tanks.

Visible emissions were observed and recorded at the filter outlet stack discharge. Fugitive emissions were observed around the saturator capture hoods and around the HVAF inlet ductwork. Half of the saturator readings were made at the spray-dip portion and the other half at the strike-in/coater section.

Other tests made at the inlet and outlet of the filter unit included particulate, gaseous hydrocarbon, POM, and SO_2.

The results of the emission tests at Facility C are given in Figures C-3 to C-7 and in Tables C-10 to C-14.

C.2.1.4 Facility D. The shingle manufacturing line at Facility D was operating at a production rate of 43.27 Mg/h (47.7 tons/h) during the emission tests. The emission sources sampled were the dip-type saturator, the drying-in section, and the wet looper. Emissions from these sources were controlled by an HVAF.

The visible emissions were recorded at the asphalt truck unloading area and at the HVAF outlet stack. Fugitive emissions were recorded at each end of the saturator capture hoods. Emission tests were also conducted to determine particulate and gaseous hydrocarbon levels.

The results of the emission tests at Facility D are contained in Figure C-8 and in Tables C-15 and C-16.

C.2.1.5 Facility E. The emission sources sampled at Facility E were two asphalt blowing (or oxidation) stills with a blowing capacity of 36.34 m^3 (9,600 gal) each. The blowing durations were 1-1/2 hours for saturant blows and 4-1/2 hours for coating blows. Each still was equipped with a knock-out chamber, and one afterburner was used for controlling emissions from the stills.

Visible emission observations were recorded at the afterburner stack by two observers. Emissions were also measured for particulates, HC, NO_x, SO_2, aldehydes, and POM.

The results of the emission testing program at Facility E are contained in Figures C-9 and in Tables C-17 to C-22a.

C.2.1.6 Facility F. Emission tests were conducted at Facility F to determine the opacity of stack emissions from the mist eliminator that controlled emissions from the asphalt storage systems. Two main storage tanks, one flux tank, and four work tanks were ducted to the same mist eliminator.

Visible emission tests were made of the exhaust stack effluent from the mist eliminator. The results are contained in Table C-23.

C.3 EMISSION TEST PROGRAM FOR SELECTED NON-METALLIC MINERAL PROCESSES

A source testing program was undertaken by EPA to evaluate techniques available for controlling particulate emissions from non-metallic mineral plant process facilities, including screens and material handling operations, especially conveyor transfer points. This appendix describes the facilities tested (their operating conditions and

characteristics of exhaust gas streams) and summarizes the results of the particulate emission tests and visible emission observations.

Five baghouse collectors controlling process facilities at five crushed stone installations (two limestone, one mica, and two traprock) were tested using EPA Reference Method 5, except as noted in the facility descriptions, for determination of particulate matter from stationary sources. The results are summarized in Tables C-24 to C-32.

Fugitive and visible emission observations were made in accordance with procedures recommended in EPA Reference Method 9 for visual determination of the opacity of emissions from stationary sources. Visible emission observations were made at the exhaust of each control device and fugitive emission observations at hoods and collection points for process facilities. The data are presented in terms of percent of time equal to or greater than a given opacity.

C.3.1 Description of Selected Non-Metallic Mineral Process Facilities Tested

C.3.1.1 Facility G. The production unit sampled at Facility G was the conveyor transfer point at the tail of an overland conveyor for crushed limestone. The conveyor had a 227-kg/s (900-tons/h) capacity using a 76.2-cm (30-inch) belt at a speed of 3.6 m/s (700 ft/s). The transfer point was enclosed, and emissions were vented to a small baghouse unit for collection. Three particulate sampling tests were conducted. Visible emission observations were made at the baghouse outlet and at the transfer point. The results are given in Table C-24.

C.3.1.2 Facility H. At Facility H the production units sampled were two three-deck vibrating screens. These screens, used for the final sizing of limestone, were operated at a rate of 31.5 kg/s (125 tons/h). Particulate emissions collected from the top of both screens, at the feed to both screens, and at both the head and tail of a shuttle conveyor between the screens were vented to a mechanical shaker-type baghouse. The results are given in Table C-25.

C.3.1.3 Facility J. The finishing screen for traprock at Facility J was totally enclosed and was operated at a rate of 63 kg/s (250 tons/h). Emissions collected from the top of the screen enclosure, from all screen

discharge points, and from several conveyor transfer points were vented to a fabric filter. The results are given in Table C-26.

C.3.1.4 Facility K. Five screens used for final sizing of traprock, and eight storage bins were tested at Facility K. This facility processed traprock at a rate of 94.5 kg/s (375 tons/h). All screens and bins were totally enclosed, and emissions were vented to a jet pulse-type baghouse for collection. The results are given in Table C-27.

C.3.1.5 Facility L. The bagging operation used to package ground mica was sampled at Facility L. Particulate emissions were controlled by a baghouse. Fugitive emission observations were made at the capture point. The results are given in Table C-28.

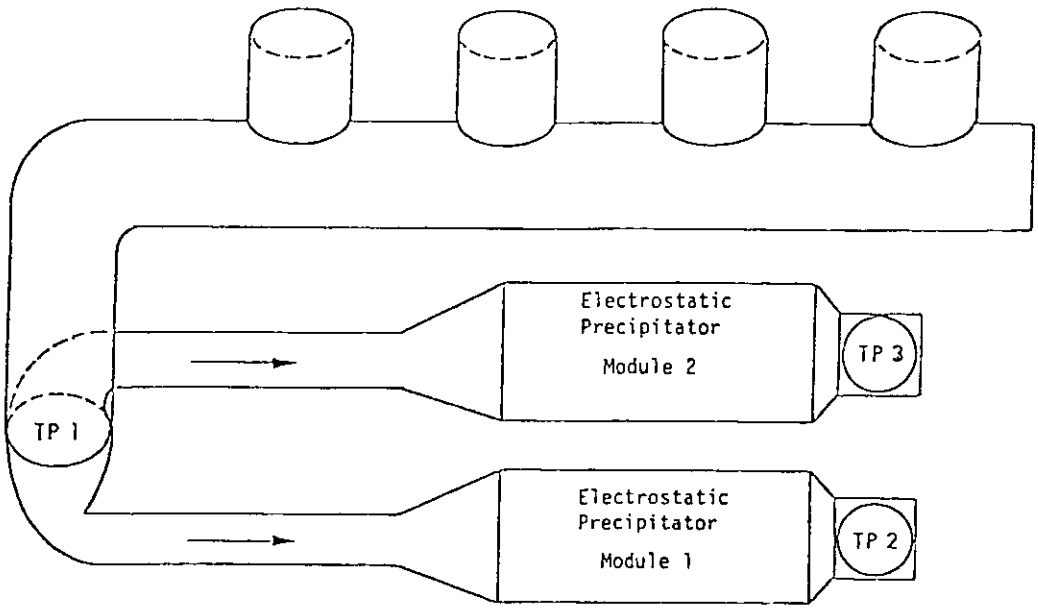

Figure C-1. Schematic of ducting arrangement and test points (TP)--Plant A.

TABLE C-1. VISIBLE EMISSIONS COMPOSITE SUMMARIES--PLANT A
OCTOBER 7, 1975

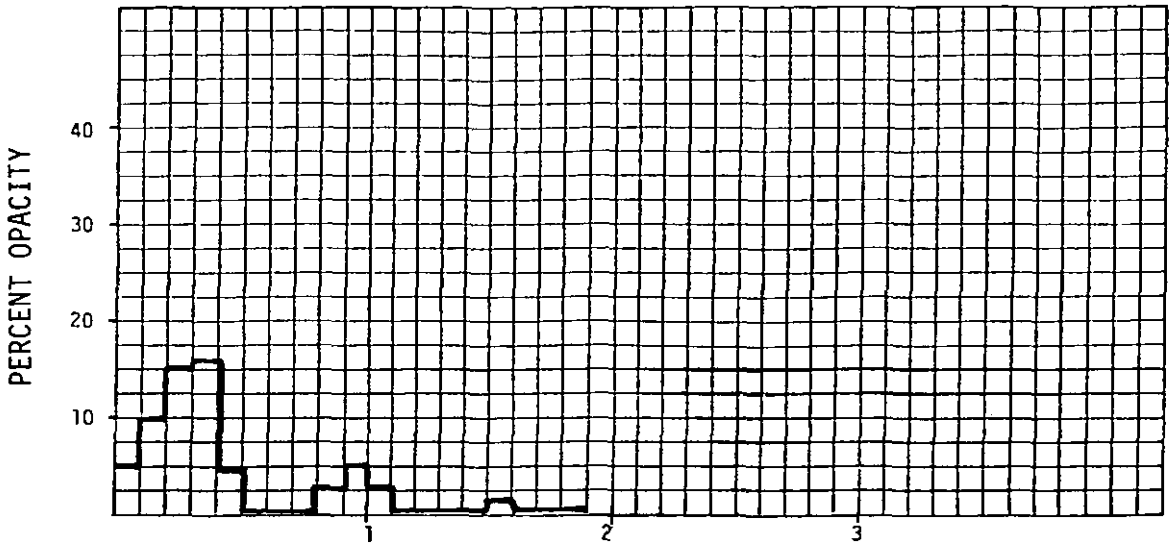

TIME--HOURS

OUTLET STACK TP-2, OBSERVERS 1 AND 2

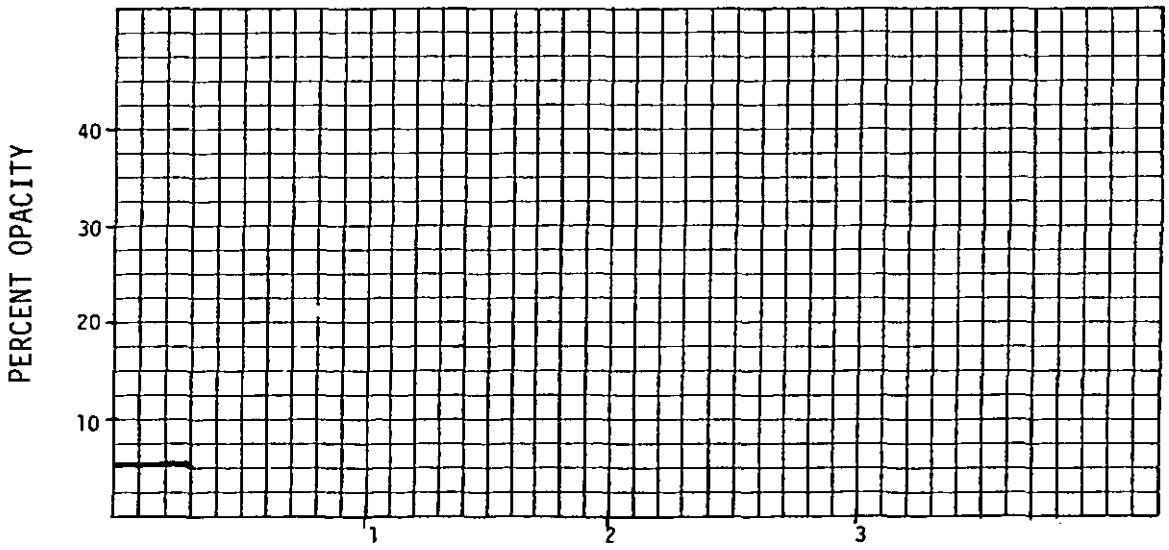

TIME--HOURS

OUTLET STACK TP-3, OBSERVERS 1 AND 2

TABLE C-1. VISIBLE EMISSIONS COMPOSITE SUMMARIES--PLANT A
OCTOBER 8, 1975
(continued)

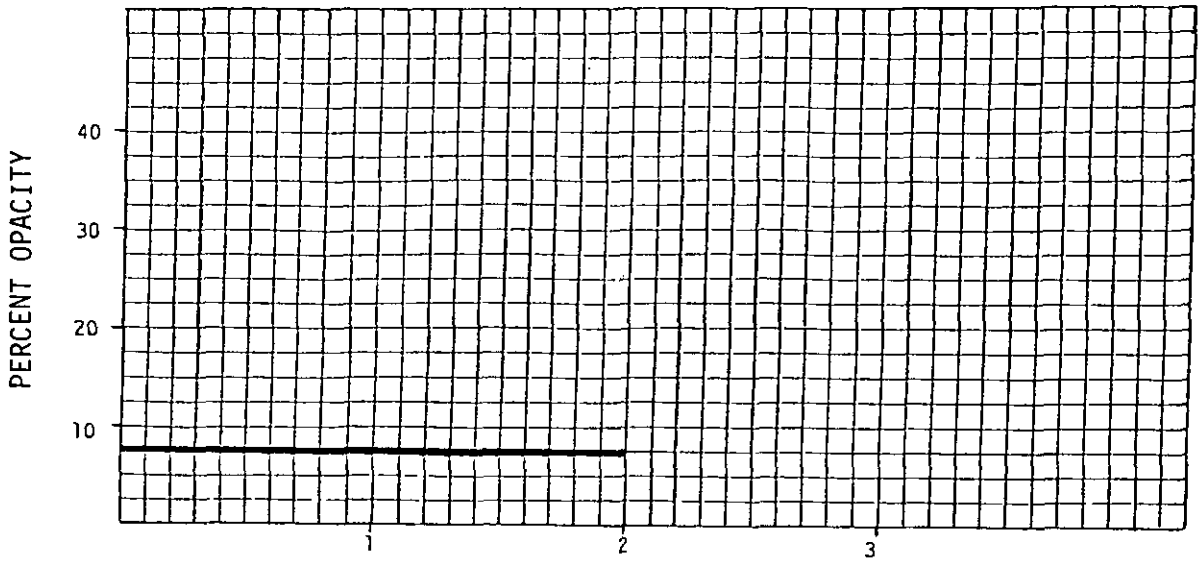

TIME--HOURS

SATURATOR HOOD, OBSERVERS 1 AND 2

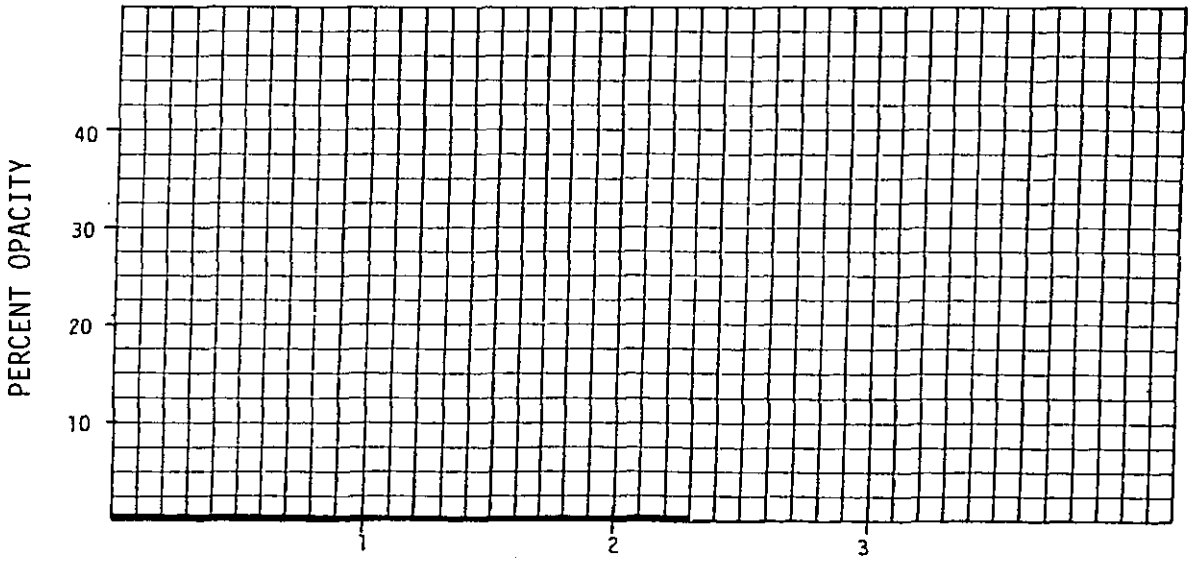

TIME--HOURS

OUTLET STACKS TP-2 AND TP-3, OBSERVERS 1, 2, AND 3

TABLE C-1. VISIBLE EMISSIONS COMPOSITE SUMMARIES--PLANT A
OCTOBER 9, 1975
(continued)

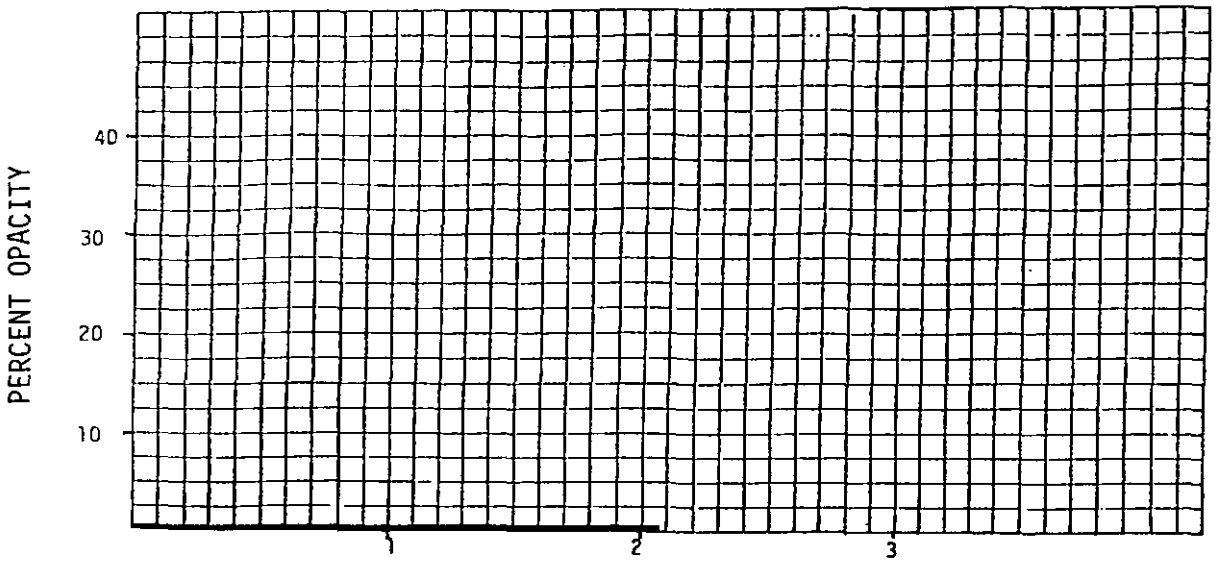

TIME--HOURS

OUTLET STACK TP-3, OBSERVERS 1 AND 3

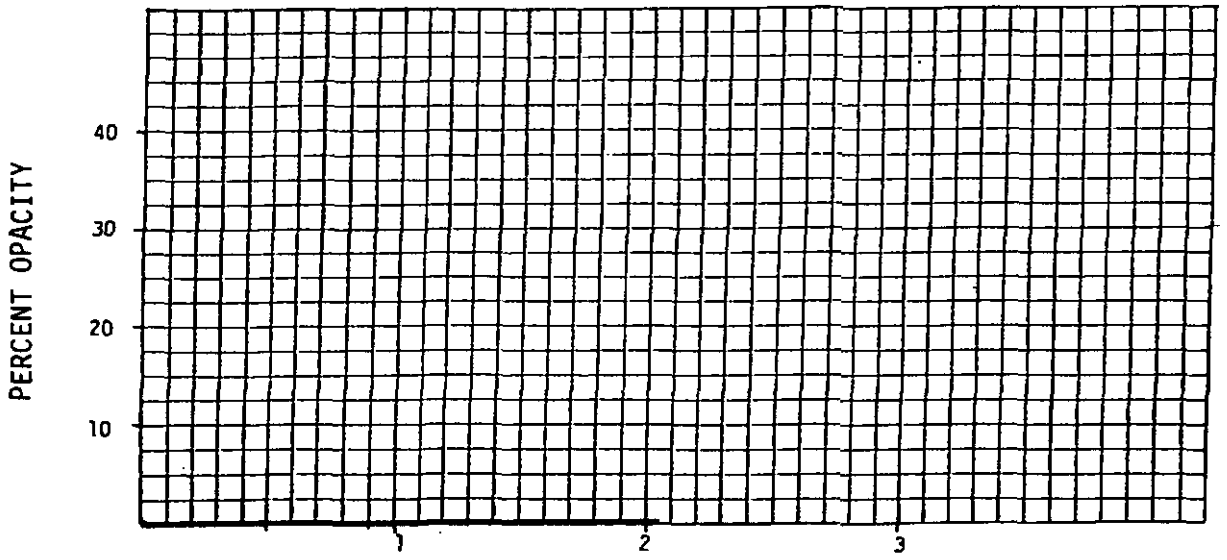

TIME--HOURS

OUTLET STACK TP-2, OBSERVERS 2 AND 4

TABLE C-1. VISIBLE EMISSIONS COMPOSITE SUMMARIES--PLANT A
OCTOBER 9, 1975
(concluded)

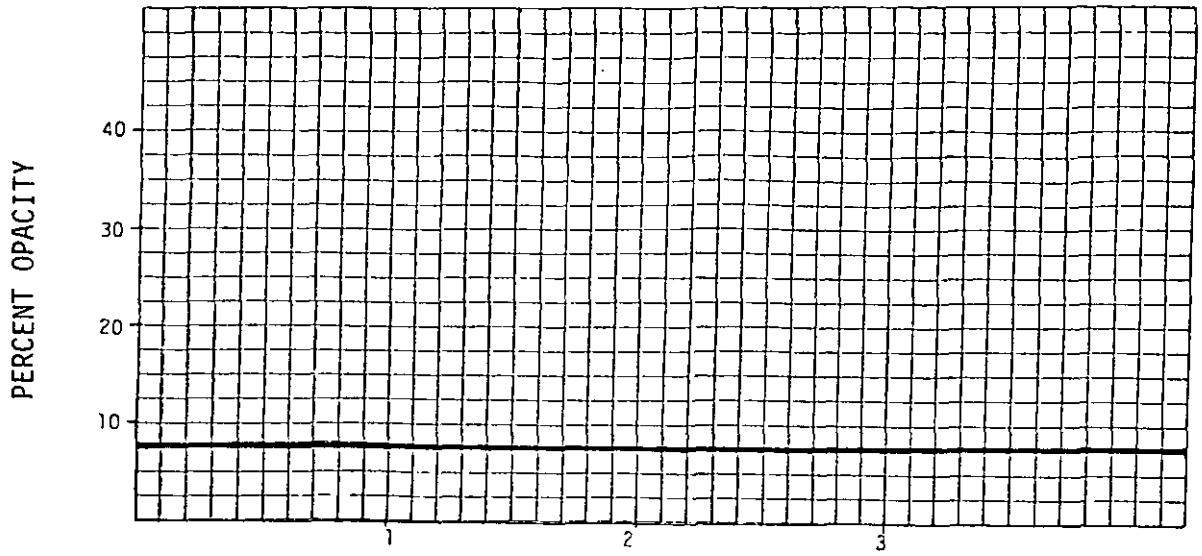

TIME--HOURS

SATURATOR HOOD, OBSERVERS 1 AND 2

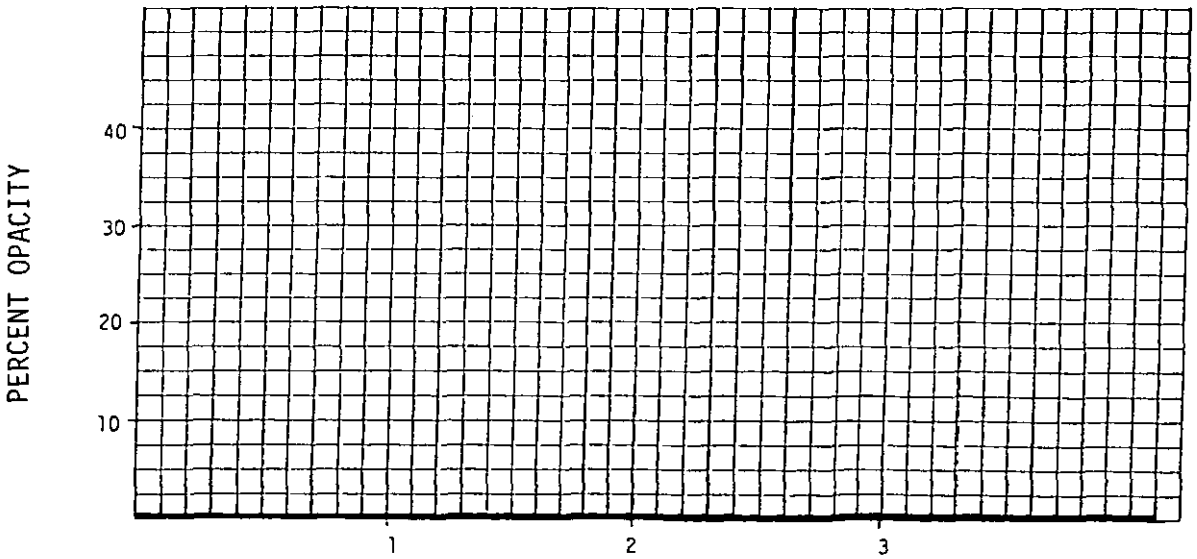

TIME--HOURS

OUTLET STACKS TP-2 AND TP-3, OBSERVERS 3 AND 4

TABLE C-2. PARTICULATE AND GASEOUS HYDROCARBON CONCENTRATION AND EMISSION DATA SUMMARY--PLANT A (METRIC)

Run number	Run 1		Run 2		Run 3		Run 4		Average	
Location	Inlet	Outlet[a]	Inlet	Outlet[a]	Inlet	Outlet[a]	Inlet	Outlet[a]	Inlet	Outlet[a]
Date	10/7/75	10/7/75	10/8/75	10/8/75	10/8/75	10/8/75	10/10/75	10/10/75		
Volume of gas sampled--Nm^3[b]	2.86	5.98	2.90	5.66	3.14	5.76	3.17	5.82	3.02	5.80
Percent moisture by volume	2.8	3.1	2.4	2.7	2.2	2.7	2.2	2.7	2.4	2.8
Average stack temperature--°C	51.6	54.4	51.1	56.1	57.2	64.4	48.3	54.4	52.2	57.8
Stack volumetric flow rate--Nm^3/s[c]	11.98	12.09	12.39	11.79	12.48	11.65	12.47	11.83	12.33	11.84
Stack volumetric flow rate--m^3/s[d]	13.80	13.99	14.19	13.67	14.48	13.82	14.08	13.63	14.14	13.78
Percent isokinetic	97.2	100.3	101.2	100.4	102.5	100.3	103.5	99.7	101.1	100.2
Percent opacity average[e]	--	3.6	--	0	--	0	--	0(10/9/75)	--	1.0
Production rates--Mg/h										28.15
Particulates--probe, cyclone, and filter catch										
mg	530.30	127.8	423.30	29.4	489.60	61.8	352.70	22.1	449.00	60.28
$kg/Nm^3 \times 10^{-3}$	0.19	0.02	0.15	0.006	0.16	0.01	0.11	0.004	0.15	0.01
$kg/m^3 \times 10^{-3}$	0.16	0.02	0.13	0.004	0.13	0.009	0.10	0.003	0.13	0.009
$kg/s \times 10^{-4}$	22.2	2.60	18.00	0.6	19.40	1.20	13.90	0.40	18.40	1.2
Particulates, kg per Mg									0.235	0.015
Collection efficiency, percent	88.3		96.6		93.6		96.8		93.8	
Gaseous hydrocarbons--Average results										
Weighted average value, ppmv[f] as CH_4	42.8	50.6	43.7	50.3	38.1	43.2	39.3	42.7	41.0	46.7
$kg/Nm^3 \times 10^{-3}$	0.029	0.035	0.030	0.034	0.026	0.030	0.027	0.029	0.028	0.032
$kg/s \times 10^{-4}$	3.49	4.18	3.69	4.03	3.23	3.41	3.31	3.43	3.44	3.77
Collection efficiency, percent (based on weighted Nm^3 average)	0		0		0		0		0	

[a] Includes data from both outlet stacks (TP-2 and TP-3).
[b] Normal cubic meters at 21.1°C, 101.7×10^3 Pa.
[c] Normal cubic meters per second at 21.1°C, 101.7×10^3 Pa.
[d] Actual cubic meters per second.
[e] Average of 6-minute interval averages per date; opacity reading times do not coincide with particulate test times.
[f] Parts per million, by volume.

TABLE C-2a. PARTICULATE AND GASEOUS HYDROCARBON CONCENTRATION AND EMISSION DATA SUMMARY--PLANT A (ENGLISH)

Run number / Location	Run 1 Inlet	Run 1 Outlet[a]	Run 2 Inlet	Run 2 Outlet[a]	Run 3 Inlet	Run 3 Outlet[a]	Run 4 Inlet	Run 4 Outlet[a]	Average Inlet	Average Outlet[a]
Date	10/7/75	10/7/75	10/8/75	10/8/75	10/8/75	10/8/75	10/10/75	10/10/75		
Volume of gas sampled--DSCF[b]	100.92	211.03	102.54	199.74	110.76	203.29	111.83	205.39	106.51	204.87
Percent moisture by volume	2.8	3.1	2.4	2.7	2.2	2.7	2.2	2.7	2.4	2.8
Average stack temperature--°F	125	130	124	133	135	148	119	130	126	136
Stack volumetric flow rate--DSCFM[c]	25,389	25,615	26,255	24,990	26,438	24,679	26,422	25,073	26,131	25,089
Stack volumetric flow rate--acfm[d]	29,248	29,644	30,070	28,959	30,683	29,290	29,840	28,881	29,959	29,194
Percent isokinetic	97.2	100.3	101.2	100.4	102.5	100.3	103.5	99.7	101.1	100.2
Percent opacity average[e]	--	3.6	--	0	--	0	--	0(10/9/75)	--	1.0
Feed rate--ton/h										31.03
Particulates--probe, cyclone, and filter catch										
mg	530.30	127.8	423.30	29.4	489.60	61.8	352.70	22.1	449.00	60.28
gr/DSCF	0.0809	0.00931	0.0635	0.00227	0.0681	0.00469	0.0486	0.00166	0.0653	0.00448
gr/acf	0.0702	0.00804	0.0555	0.00196	0.0586	0.00395	0.0430	0.00144	0.0568	0.00385
lb/h	17.61	2.06	14.31	0.48	15.43	0.99	11.00	0.35	14.59	0.97
lb/ton									0.47	0.03
Collection efficiency, percent	88.3		96.6		93.6		96.8		93.8	
Gaseous hydrocarbons--Average results										
Weighted average value, ppmv[f] as CH_4	42.8	50.6	43.7	50.3	38.1	43.2	39.3	42.7	41.0	46.7
gr/DSCF	0.0127	0.0151	0.0130	0.0150	0.0113	0.0129	0.0116	0.0127	0.0122	0.0139
lb/h	2.77	3.32	2.93	3.20	2.56	2.71	2.63	2.72	2.73	2.99
Collection efficiency, percent (based on weighted DSCFM average)	0		0		0		0		0	

[a] Includes data from both outlet stacks (TP-2 and TP-3).
[b] Dry standard cubic feet at 70°F, 29.92 in. Hg.
[c] Dry standard cubic feet per minute at 70°F, 29.92 in. Hg.
[d] Actual cubic feet per minute.
[e] Average of 6-minute interval averages per date; opacity reading times do not coincide with particulate test times.
[f] Parts per million, by volume

TABLE C-3. PARTICULATE POLYCYCLIC ORGANIC MATTER CONCENTRATION AND EMISSION DATA SUMMARY--PLANT A (OCTOBER 9, 1975) (METRIC)

Sampling location	Inlet (TP-1)	(Sampled stack) Outlet (TP-3)	Outlet (TP-2)[a] estimated value	Combined total flow conditions for outlet stacks
Volume of gas sampled--Nm^3[b]	2.25	2.81	--	--
Percent moisture by volume	2.1	2.2	2.2	2.2
Average stack temperature--°C	58.3	58.9	58.9	58.9
Stack volumetric flow rate--Nm^3/s[c]	12.47	5.67	6.07	11.74
Stack volumetric flow rate--m^3/s[d]	14.45	6.57	7.05	13.62
Percent isokinetic	106.7	99.7	--	--

Particulate--POM Sampling location	μg Inlet	μg Outlet	Concentration $kg/m^3 x10^{-9}$ Inlet	Concentration $kg/m^3 x10^{-9}$ Outlet	Emission rate $kg/s x10^{-7}$ Inlet	Emission rate $kg/s x10^{-7}$ Outlet (TP-2+TP-3)[a]
Component						
Anthracene/Phenanthrene	51.2	44.8	22.70	15.90	2.83	1.86
Methyl anthracenes	181.8	102.2	80.55	36.16	10.04	4.25
Fluroanthene	0.950	6.25	0.41	2.22	0.05	0.26
Pyrene	7.40	2.90	3.27	1.03	0.40	0.12
Methyl pyrene/Fluoranthene	4.00	20.9	1.78	7.41	0.23	0.87
Benzo(c)phenanthrene	0.350	Not detected	0.156	ND[e]	0.02	ND
Chrysene/Benz(a)anthracene	8.30	0.700	3.68	0.25	0.45	0.029
Methyl chrysenes	21.8	0.350	9.66	0.12	1.21	0.015
Benzo fluoranthenes	5.30	0.350	2.36	0.12	0.29	0.015
Benz(a)pyrene[f] / Benz(e)pyrene	13.5	0.900	6.00	0.32	0.74	0.04
Totals	294.6	179.4	(13.07)	(6.36)	16.25	7.46
Collection efficiency, percent	--		--		54.1	

[a]Average Nm^3 at TP-2 outlet stack during four particulate tests was 6.6 percent higher than flow from TP-3 stack. m^3/s was 6.9 percent higher. These values were used to estimate total outlet flow.
[b]Normal cubic meters at 21.1°C, $101.7x10^3$ Pa.
[c]Normal cubic meters per second at 21.1°C, $101.7x10^3$ Pa.
[d]Actual cubic meters per second.
[e]ND=No data.
[f]Benz(a)pyrene and Benz(e)pyrene analysis combined and reported as one value.

TABLE C-3a. PARTICULATE POLYCYCLIC ORGANIC MATTER CONCENTRATION AND EMISSION DATA SUMMARY--PLANT A (OCTOBER 9, 1975) (ENGLISH)

Sampling location	Inlet (TP-1)	(Sampled stack) Outlet (TP-3)	Outlet (TP-2)[a] estimated value	Combined total flow conditions for outlet stacks
Volume of gas sampled--DSCF[b]	79.48	99.30	--	
Percent moisture by volume	2.1	2.2	2.2	2.2
Average stack temperature--°F	137	138	138	138
Stack volumetric flow rate--DSCFM[c]	26,416	12,009	12,858	24,867
Stack volumetric flow rate--acfm[d]	30,625	13,914	14,946	28,860
Percent isokinetic	106.7	99.7	--	

Particulate--POM Sampling location	μg Inlet	μg Outlet	Concentration (gr/DSCFx10^{-6}) Inlet	Concentration (gr/DSCFx10^{-6}) Outlet	Emission rate (lb/hx10^{-3}) Inlet	Emission rate (lb/hx10^{-3}) Outlet (TP-2+TP-3)[a]
Component						
Anthracene/Phenanthrene	51.2	44.8	9.92	6.95	2.25	1.48
Methyl anthracenes	181.8	102.2	35.2	15.8	7.97	3.37
Fluroanthene	0.950	6.25	0.18	0.97	0.04	0.21
Pyrene	7.40	2.90	1.43	0.45	0.32	0.096
Methyl pyrene/Fluoranthene	4.00	20.9	0.78	3.24	0.18	0.69
Benzo(c)phenanthrene	0.350	Not detected	0.068	ND[e]	0.015	ND
Chrysene/Benz(a)anthracene	8.30	0.700	1.61	0.11	0.36	0.023
Methyl chrysenes	21.8	0.350	4.22	0.054	0.96	0.012
Benzo fluoranthenes	5.30	0.350	1.03	0.054	0.23	0.012
Benz(a)pyrene[f] / Benz(e)pyrene	13.5	0.900	2.62	0.14	0.59	0.030
Totals	294.6	179.4	5.71x10^{-6}	2.78x10^{-6}	12.9x10^{-3}	5.92x10^{-3}
Collection efficiency, percent	--		--		54.1	

[a]Average DSCFM at TP-2 outlet stack during four particulate tests was 6.6 percent higher than flow from TP-3 stack. acfm was 6.9 percent higher. These values were used to estimate total outlet flow.
[b]Dry standard cubic feet at 70°F, 29.92 in. Hg.
[c]Dry standard cubic feet per minute at 70°F, 29.92 in. Hg.
[d]Actual cubic feet per minute.
[e]ND=No data.
[f]Benz(a)pyrene and Benz(e)pyrene analysis combined and reported as one value.

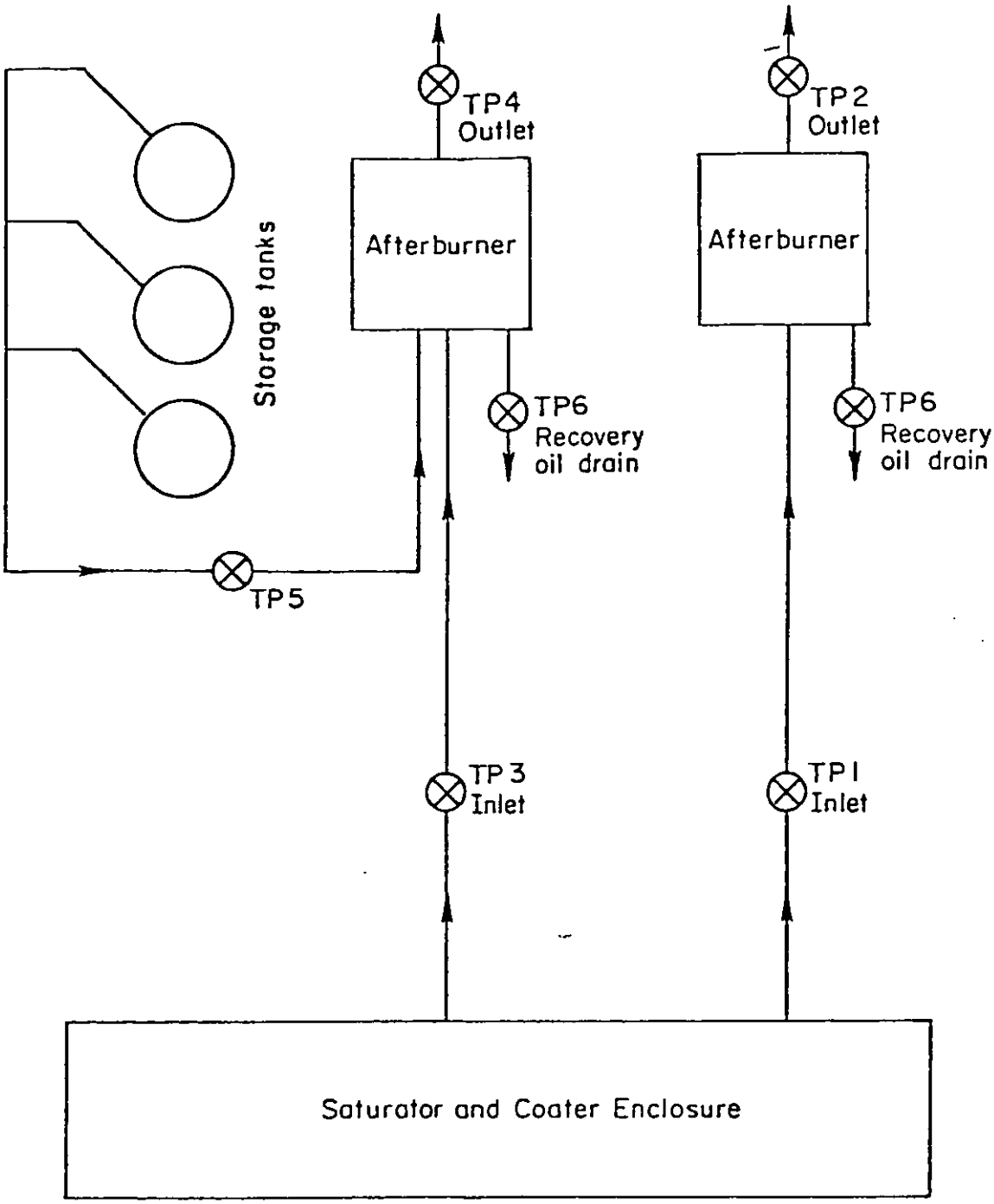

Figure C-2. Block diagram showing relative locations of process components and sample points--Plant B.

TABLE C-4. SUMMARY OF VISIBLE EMISSION DATA--PLANT B

Date	24-h clock time	Location/ type of discharge	Observer	Dist. to source m	Dist. to source (ft)	Direction from source	Wind direction	Wind velocity M/s	Wind velocity (mph)	Weather	Background	Time-opacity
9/9/75	0935-1230	A[a]	1	9.14	(30)	S	SE	3.6-6.7	(8-15)	Overcast, partly cloudy	Gray clouds and light blue sky	175 min-0%
9/9/75	0935-1230	A	2	9.14	(30)	S	SE	3.6-6.7	(8-15)	Overcast, partly cloudy	Gray clouds and light blue sky	175 min-0%
9/9/75	1425-1830	A	1	9.14	(30)	S	SE	2.2-6.7	(5-15)	NA[b]	NA	245 min-0%
9/9/75	1425-1830	A	2	9.14	(30)	S	SE	2.2-6.7	(5-15)	NA	NA	245 min-0%
9/11/75	0935-1230	B[c]	1	15.24	(50)	E	N-NW	3.6-6.7	(8-15)	Partly cloudy	White brick building	150 min-0%
9/11/75	0935-1230	B	2	15.24	(50)	E	N-NW	3.6-6.7	(8-15)	Partly cloudy	White brick building	150 min-0%
9/11/75	1330-1640	B	1	15.24	(50)	S	NW	4.5-8.9	(10-20)	Overcast, partly cloudy	White, gray clouds, blue sky	190 min-0%
9/11/75	1330-1640	B	2	15.24-18.3	(50-60)	S	NW	4.5-8.9	(10-20)	Overcast, partly cloudy	White, gray clouds, blue sky	190 min-0%
9/12/75	0900-1930	C[d]	1	3.05-6.1	(10-20)	N	*[e]	*	*	*	Green and white doors and hood	331 min 30 s- 0% 8 min 15 s- 5% 3 min 15 s-10% 4 min 45 s-15% 13 min 0 s-20% 6 min 0 s-25% 7 min 30 s-30% 1 min 0 s-35% 0 min 15 s-40%
9/12/75	0900-1930	C	2	3.05-6.1	(10-20)	N	*	*	*	*	Green and white doors and hood and gray machinery	338 min 0 s- 0% 18 min 30 s- 5% 9 min 0 s-10% 0 min 45 s-15% 5 min 0 s-20% 4 min 15 s-30%

[a]Discharge area A, test point 4 (outlet).
[b]NA=Not applicable.
[c]Discharge area B, test point 2 (outlet).
[d]Discharge area C, saturator hood, hot looper, coater section.
[e]*=Indoors.

TABLE C-5. SUMMARY OF PARTICULATE AND GASEOUS HYDROCARBON CONCENTRATION AND EMISSION RATES--PLANT B (METRIC) AFTERBURNER 1

	TP-1 1	TP-2 1	TP-1 2	TP-2 2	TP-1 3	TP-2 3	Average/3 runs TP-1	Average/3 runs TP-2
Date	9-9-75	9-9-75	9-11-75	9-11-75	9-12-75	9-12-75		
Volume gas sampled, Nm^3 [a]	2.55	2.35	2.55	3.24	3.18	3.13	2.76	2.91
Percent moisture by volume	3.0	3.4	2.0	2.5	1.8	1.4	2.3	2.4
Stack temperature, °C	43	290	101	273	103	277	82	280
Stack volumetric flow rate, Nm^3/s [b]	3.8	6.35	3.59	6.29	3.71	6.46	3.70	6.37
Stack volumetric flow rate, m^3/s [c]	4.26	12.80	4.76	12.18	4.91	12.42	4.64	12.47
Percent isokenetic	95.7	108.8	102.1	108.6	95.7	102.1	97.8	106.5
Production rate							36.9Mg/h	
Particulates--probe, cyclone, and filter catch								
mg	1,210.7	134.9	879.6	147.3	1,321.7	182.6	1,137.3	154.9
g/Nm^3	0.475	0.058	0.345	0.046	0.416	0.059	0.412	0.054
g/m^3	0.423	0.029	0.260	0.024	0.314	0.030	0.332	0.028
kg/h	6.480	1.296	4.392	1.008	5.508	1.404	5.508	1.188
kg/Mg							0.145	0.004
Collection efficiency, percent								
Individual runs	79.7		76.5		75.4		77.7	
Gaseous hydrocarbons, average results								
Weighted average value, ppmv as CH_4 [d]	71.3	64.9	67.6	25.2	67.7	ND	68.9	45.1
kg/Nm^3	0.048	0.043	0.046	0.016	0.046	ND	0.046	0.030
kg/h	0.695	0.990	0.580	0.382	0.601	ND	0.612	0.684
Collection efficiency percent	0		34.4		ND			

[a] Dry standard cubic meters at 20°C, 101.7×10^3 Pa.
[b] Dry standard cubic meters per minute at 20°C, 1.017×10^5 Pa.
[c] Actual cubic meters per minute.
[d] Dry standard cubic meters per minute at 20°C, 1.017×10^5 Pa.

TABLE C-5. SUMMARY OF PARTICULATE AND GASEOUS HYDROCARBON CONCENTRATION AND EMISSION RATES--PLANT B (METRIC) AFTERBURNER 2

	TP-3 1	TP-4 1	TP-3-2 TP-5-4	TP-4 2	TP-3 3	TP-4 3	Average/3 runs TP-3, TP-5	Average/3 runs TP-4
Date	9-9-75	9-9-75	9-11-75	9-11-75	9-12-75	9-12-75		
Volume gas sampled, Nm^3 [a]	1.47	3.10	3.79	3.19	2.72	2.88	2.66	3.05
Percent moisture by volume	5.7	4.6	3.6[e]	3.0	4.3	2.8	4.5	3.5
Stack temperature, °C	101	366	86[e]	377	94	347	94	363
Stack volumetric flow rate, Nm^3/s [b]	3.03	5.96	3.53	6.28	3.29	6.10	3.28	6.11
Stack volumetric flow rate, m^3/s [c]	4.13	13.69	4.57	14.56	4.37	13.32	4.36	13.86
Percent isokenetic	100.8	101.0	101.8[e]	99.0	97.2	91.7	99.9	97.2
Production rate							36.9 Mg/h	
Particulates--probe, cyclone, and filter catch								
mg	17,274.7	57.7	1,805.1	50.3	2,208.2	89.5	7,096.0	65.8
g/Nm^3	11.76	0.019	0.402[e]	0.016	0.815	0.031	4.33	0.022
g/m^3	8.61	0.008	0.310[e]	0.007	0.614	0.014	3.18	0.009
kg/h	355.0	1.1	14.2	1.1	26.7	1.9	132.0	1.4
kg/Mg							1.28	0.015
Collection efficiency, percent								
Individual runs		99.7[j]		92.9		92.9[j]		95.2
Gaseous hydrocarbons, average results								
Weighted average value, ppmv as CH_4 [d]	171.2	78.0	120.5[f]	77.7	110.7	66.1	134.1	73.9
kg/Nm^3	121	0.055	0.089	0.053	0.076	0.046	0.096	0.050
kg/h	3.50	3.11	3.28[g]	3.25	2.44	2.69	3.08	3.03
Collection efficiency, percent		10.8		1.0[h]		0		1.6

[a] Dry standard cubic meters at 20°C, 101.7×10^3 Pa.
[b] Dry standard cubic meters per minute at 20°C, 1.017×10^5 Pa.
[c] Actual cubic meters per minute.
[d] Dry standard cubic meters per minute at 20°C, 1.017×10^5 Pa.
[e] Weighted average of runs TP-3-2 and TP-5-4.
[f] Weighted average of runs TP-3-2 with average runs TP-5-2 and TP-5-3.
[g] TP-5-2 and TP-5-3 averaged and added to TP-3-2 for combined kg/s.
[h] Based on weighted Nm /s.
[j] Damper closed.

TABLE C-5a. SUMMARY OF PARTICULATE AND GASEOUS HYDROCARBON CONCENTRATION AND EMISSION RATES--PLANT B (ENGLISH)
AFTERBURNER 1

	TP-1 1	TP-2 1	TP-1 2	TP-2 2	TP-1 3	TP-2 3	Average/3 runs TP-1	Average/3 runs TP-2
Date	9-9-75	9-9-75	9-11-75	9-11-75	9-12-75	9-12-75		
Volume gas sampled, dscf[a]	90.1	83.0	90.2	114.3	112.4	110.5	97.6	102.6
Percent moisture by volume	3.0	3.4	2.0	2.5	1.8	1.4	2.3	2.4
Stack temperature, °F	111	555	214	524	218	532	181	537
Stack volumetric flow rate, DSCFM[b]	8,043	13,452	7,599	13,318	7,860	13,693	7,834	13,488
Stack volumetric flow rate, ACFM[c]	9,035	27,118	10,077	25,810	10,394	26,322	9,835	26,417
Percent isokenetic	95.7	108.8	102.1	108.6	95.7	102.1	97.8	106.5
Production rate							40.7 tons/h	
Particulates--probe, cyclone, and filter catch								
mg	1,210.7	134.9	879.6	147.3	1,321.7	182.6	1,137.3	154.9
gr/DSCF	0.207	0.025	0.150	0.020	0.181	0.025	0.179	0.023
gr/ACF	0.184	0.012	0.113	0.010	0.137	0.013	0.145	0.012
lb/h	14.3	2.9	9.8	2.3	12.2	3.0	12.1	2.7
lb/ton							0.29	0.07
Collection efficiency, percent								
Individual runs		79.7		76.5		75.4		77.7
Gaseous hydrocarbons, average results								
Weighted average value, ppmv as CH_4[d]	71.3	64.9	67.6	25.2	67.7	ND[k]	68.9	45.1
gr/DSCF	0.021	0.019	0.020	0.007	0.020	ND	0.020	0.013
lb/h	1.45	2.19	1.28	0.84	1.33	ND	1.35	1.52
Collection efficiency, percent		0		34.4		ND		

[a] Dry standard cubic feet at 70°F, 29.92 in. Hg.
[b] Dry standard cubic feet per minute at 70°F, 29.92 in. Hg.
[c] Actual cubic feet per minute.
[d] ppmv = parts per million by volume.
[e] Weighted average of runs TP-3-2 and TP-5-4.
[f] Weighted average of runs TP-3-2 with average of runs TP-5-2 and TP-5-3.
[g] TP-5-2 and TP-5-3 averaged and added to TP-3-2 for combined lb/h.
[h] Based on weighted average.
[j] Damper closed.
[k] ND = no data.

TABLE C-5a. SUMMARY OF PARTICULATE AND GASEOUS HYDROCARBON CONCENTRATION AND EMISSION RATES--PLANT B (ENGLISH) AFTERBURNER 2

	TP-3 1	TP-4 1	TP-3-2 TP-5-4	TP-4 2	TP-3 3	TP-4 3	Average/3 runs TP-3, TP-5	Average/3 runs TP-4
Date	9-9-75	9-9-75	9-11-75	9-11-75	9-12-75	9-12-75		
Volume gas sampled, dscf[a]	51.9	109.3	133.8	112.5	95.9	101.6	93.9	107.8
Percent moisture by volume	5.7	4.6	3.6[e]	3.0	4.3	2.8	4.5	3.5
Stack temperature, °F	214	691	187[e]	712	202	657	201	687
Stack volumetric flow rate, DSCFM[b]	6,414	12,620	7,475	13,298	6,981	12,919	6,957	12,946
Stack volumetric flow rate, ACFM[c]	8,757	29,017	9,681	30,841	9,251	28,227	9,230	29,362
Percent isokenetic	100.8	101.0	101.8[e]	99.0	97.2	31.7	99.9	97.2
Production rate							40.7 tons/h	
Particulates--probe, cyclone, and filter catch,								
mg	17,274.7	57.7	1,305.1	50.3	2,208.2	89.5	7,096.0	65.8
gr/DSCF	5.121	0.008	0.175[e]	0.007	0.355	0.014	1.884	0.010
gr/ACF	3.748	0.004	0.136[e]	0.003	0.267	0.006	1.384	0.004
lb/h	281.5	0.9	11.2	0.8	21.2	1.5	104.6	1.1
lb/ton							2.57	0.03
Collection efficiency, percent								
Individual runs	99.7[j]		92.9		92.9[j]		95.2	
Gaseous hydrocarbons, average results								
Weighted average value, ppmv as CH_4[d]	171.2	78.0	120.5[f]	77.7	110.7	66.1	134.1	73.9
gr/DSCF	0.053	0.024	0.039[f]	0.023	0.033	0.020	0.042	0.022
lb/h	2.77	2.47	2.60[g]	2.58	1.94	2.14	2.44	2.40
Collection efficiency percent	10.8		1.0[h]		0		1.6	

[a]Dry standard cubic feet at 70°C, 29.92 in. Hg.
[b]Dry standard cubic feet per minute at 70°C, 29.92 in. Hg.
[c]Actual cubic feet per minute.
[d]ppmv = parts per million by volume.
[e]Weighted average of runs TP-3-2 and TP-5-4.
[f]Weighted average of runs TP-3-2 with average runs TP-5-2 and TP-5-3.
[g]TP-5-2 and TP-5-3 averaged and added to TP-3-2 for combined lb/h.
[h]Based on weighted average.
[j]Damper closed.

TABLE C-6. SUMMARY OF POM DATA--PLANT B
(METRIC)

Component	Raw data (POM by GC-MS No correction for blanks), µg: Inlet (EPA Sample S75-006-329; BCL Sample 2-3)	Raw data (POM by GC-MS No correction for blanks), µg: Outlet (EPA Sample S75-006-341 BCL Sample 12)	POM in blank µg (EPA Sample S75-006-155; BCL Sample 16)	POM in sample (corrected for blank), µg: Inlet	POM in sample (corrected for blank), µg: Outlet	POM, loading in gas stream µg/Nm³: Inlet	POM, loading in gas stream µg/Nm³: Outlet
Anthracene/ Phenanthrene	631	633.3	0.45	630.6	632.9	254	280
Methyl anthracenes	1,359	1,027.3	<0.1	1,359	1,027.3	548	455
Fluoranthene	8	18.2	0.1	7.9	18.1	3.19	8.01
Pyrene	60	48.5	0.1	59.9	48.4	24.2	21.4
Methyl pyrene/ Fluoranthene	185	130.6	<0.1	185	130.6	74.6	57.8
Benzo(c)phenanthrene	ND[a]	ND	ND	--	--	--	--
Chrysene/Benz(a) anthracene	35	203.3	<0.1	35	203.3	14.1	90.0
Methyl chrysenes	13	221.1	<0.1	13	221.1	5.24	97.8
Benzo fluoranthenes	1.9	12.5	<0.1	1.9	12.5	0.77	5.53
Benz(a)pyrene	1.0	9.9[b]	<0.1[b]	1.0	9.9[b]	0.40	4.38[b]
Benz(e)pyrene	1.3	ND	ND	1.3	ND	0.52	ND
Perylene	0.1			0.1		0.04	
3-Methycholanthrene							
Indeno(1,2,3,-cd)pyrene							
Benzo(ghi)perylene							
Dibenzo(a,h)anthracene							
Dibenzo(c,g)carbazole							
Dibenz(ai and ah)pyrenes							
Coronene							
TOTAL						925	1,020
Sample volume--Nm³	2.48	2.26					

[a]ND=No data.
[b]Benz(a)pyrene and benz(e)pyrene combined and reported as one value.

TABLE C-6a. SUMMARY OF POM DATA--PLANT B
(ENGLISH)

Component	Raw data (POM by GC-MS No correction for blanks) grx10-4 Inlet (EPA Sample 575-006-329; BCL Sample 2-3)	Raw data (POM by GC-MS No correction for blanks) grx10-4 Outlet (EPA Sample S75-006-341; BCL Sample 12)	POM in blank grx10-4 (EPA Sample S75-006-155; BCL Sample 16)	POM in sample (corrected for blank), grx10-4 Inlet	POM in sample (corrected for blank), grx10-4 Outlet	POM, loading in gas stream gr/DSCFx10-7 Inlet	POM, loading in gas stream gr/DSCFx10-7 Outlet
Anthracene/ Phenanthrene	97.4	97.7	0.069	97.33	97.63	1,110	1,224
Methyl anthracenes	209.7	158.5	<0.02	209.7	158.5	2,395	1,988
Fluoranthene	1.23	2.8	0.02	1.21	2.78	14	35
Pyrene	9.26	7.48	0.02	9.24	7.46	106	94
Methyl pyrene/ Fluoranthene	28.5	20.15	<0.02	28.5	20.15	326	253
Benzo(c)phenanthrene	ND[a]	ND	ND	--	--	--	--
Chrysene/Benz(a) anthracene	5.4	31.4	<0.02	5.40	31.4	62	393
Methyl chrysenes	2.0	34.1	<0.02	2.0	34.1	23	427
Benzo fluoranthenes	0.29	1.93	<0.02	0.29	1.93	3	24
Benz(a)pyrene	0.15	1.53[a]	0.02[b]	0.15	1.53[b]	2	19[b]
Benz(e)pyrene	0.20			0.20		2	
Perylene	0.015	ND	ND	0.015	ND	0.2	ND
3-Methycholanthrene							
Indeno(1,2,3,-cd)pyrene							
Benzo(ghi)perylene							
Dibenzo(a,h)anthracene							
Dibenzo(c,g)carbazole							
Dibenz(ai and ah)pyrenes							
Coronene							
TOTAL						4,042.2	4,457
Sample volume--DSCF	87.6	79.8					

[a]ND=No data.
[b]Benz(a)pyrene and benz(e)pyrene combined and reported as one value.

TABLE C-7 ALDEHYDE RESULTS--PLANT B

Run number[a]	Clock time[b]	Gas sample volume Nm³[c]	(DSCF)	Aldehyde mg HCHO[d]	Aldehyde concentration, mg HCHO/Nm³	Stack flowrate Nm³/s	(DSCFM)	Emission rate kg/sx10⁻⁴	(lb/h)
TP3-1	1426-1445	0.434	(15.31)	4.5	10.4	3.15[e]	(6,674)	0.33	(0.26)
TP3-2	1452-1510	0.447	(15.77)	4.4	9.9	3.15[e]	(6,674)	0.31	(0.25)
TP3-3	1538-1555	0.444	(15.69)	5.9	13.3	3.15[e]	(6,674)	0.42	(0.33)
TP4-1	1426-1444	0.456	(16.09)	7.6	16.7	6.08[f]	(12,890)	1.02	(0.81)
TP4-2	1451-1509	0.481	(16.99)	9.5	19.8	6.08[f]	(12,890)	1.21	(0.96)
TP4-3	1538-1555	0.451	(15.91)	8.6	19.1	6.08[f]	(12,890)	1.16	(0.92)
				Average inlet	11.2			0.35	(0.28)
				Outlet	18.5			1.13	(0.90)

[a]TP3=inlet; TP4=outlet.
[b]All samples taken on 9-13-75.
[c]Corrected to standard conditions, 20°C and 101.7x10³ Pa.
[d]Results corrected for blank.
[e]Mean flow at TP3 from particulate runs.
[f]Mean flow at TP4 from particulate runs.

TABLE C-8. CO EMISSIONS AND EMISSION RATES--PLANT B

Run	CO concentrations, ppm					Emission rates, kg/sx10-4 (lb/h)							
						Inlet				Outlet			
						TP-1		TP-3+5		TP-2		TP-4	
	TP-1	TP-2	TP-3	TP-4	TP-5	kg/sx10-4	(lb/h)	kg/sx10-4	(lb/h)	kg/sx10-4	(lb/h)	kg/sx10-4	(lb/h)
1	10.0	290	20	440	270	0.44	(0.35)	0.71	(0.56)	21.37	(16.96)	30.40	(24.13)
2	12.0	250	19	355	145	0.50	(0.40)	0.78	(0.62)	18.32	(14.54)	25.86	(20.52)
3	10.0	265	12	300	240	0.43	(0.34)	0.45	(0.36)	19.87	(15.77)	21.22	(16.84)
POM	--	280	--		--	--	--	--	--	20.46	(16.24)	--	--
Average	10.7	271	17	365	218	0.45	(0.36)	0.64	(0.51)	20.00	(15.88)	25.83	(20.50)

	Total inlet	Total outlet
kg/sx10-4	1.09	45.83
lb/h	0.87	36.38

Analysis method: Grab samples analyzed by nondispersive infrared analyzer.

TABLE C-9. NO_x RESULTS--PLANT B

Sampling location	Time of sampling		NO_x, ppm
	Date	Hour	
TP-1, inlet	9-12-75	1810-1820	0
TP-2, outlet	9-12-75	1645-1700	15
TP-2, outlet	9-12-75	1730-1745	10
TP-2, outlet	9-12-75	1815-1830	10
TP-3, inlet	9-12-75	a.m.	0
TP-4, outlet	9-12-75	1850-1905	10

Analysis method: Grab samples analyzed by electrochemical cell analyzer.

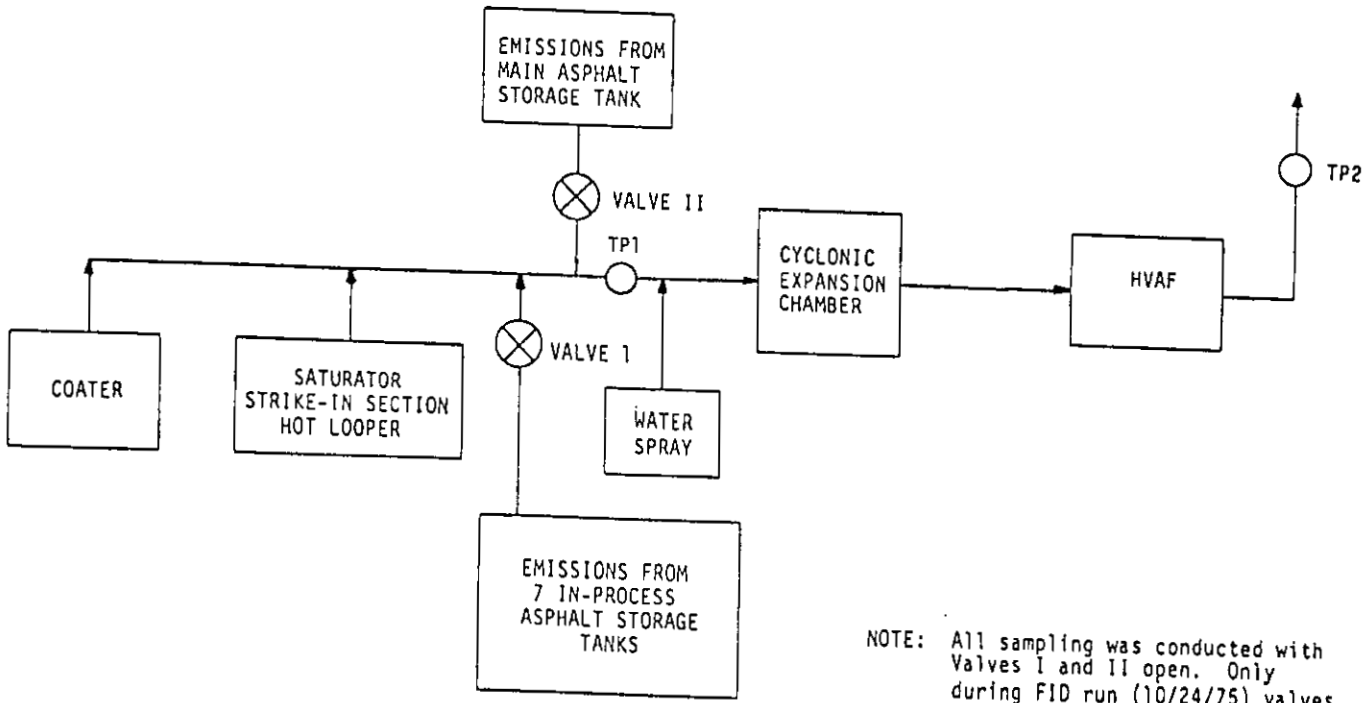

NOTE: All sampling was conducted with Valves I and II open. Only during FID run (10/24/75) valves were closed temporarily and re-opened to determine contribution of emissions from tanks.

Figure C-3. Schematic of Emission Sources Controlled by HVAF Including Test Point (TP) Plant C

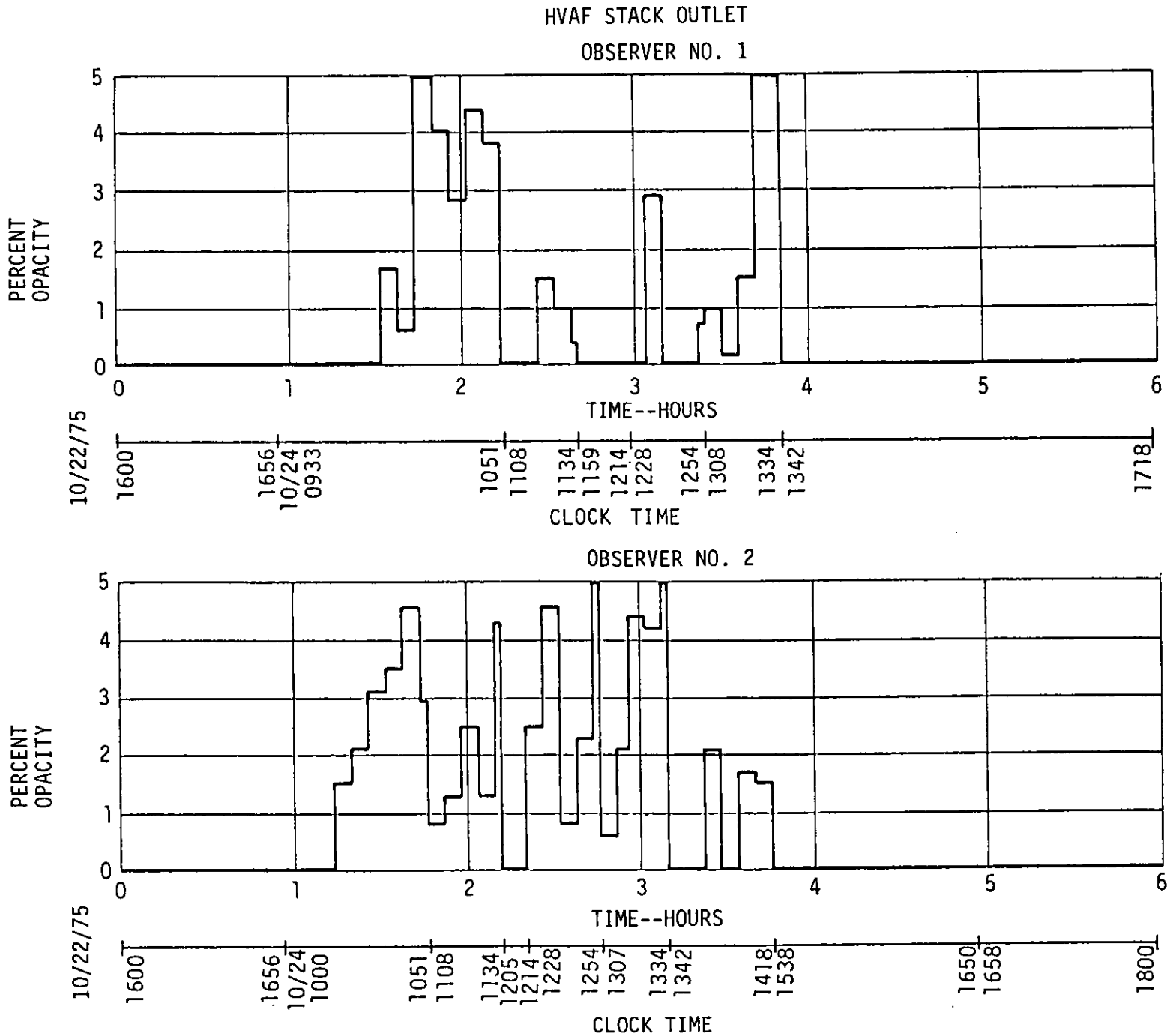

Figure C-4. Plant C.

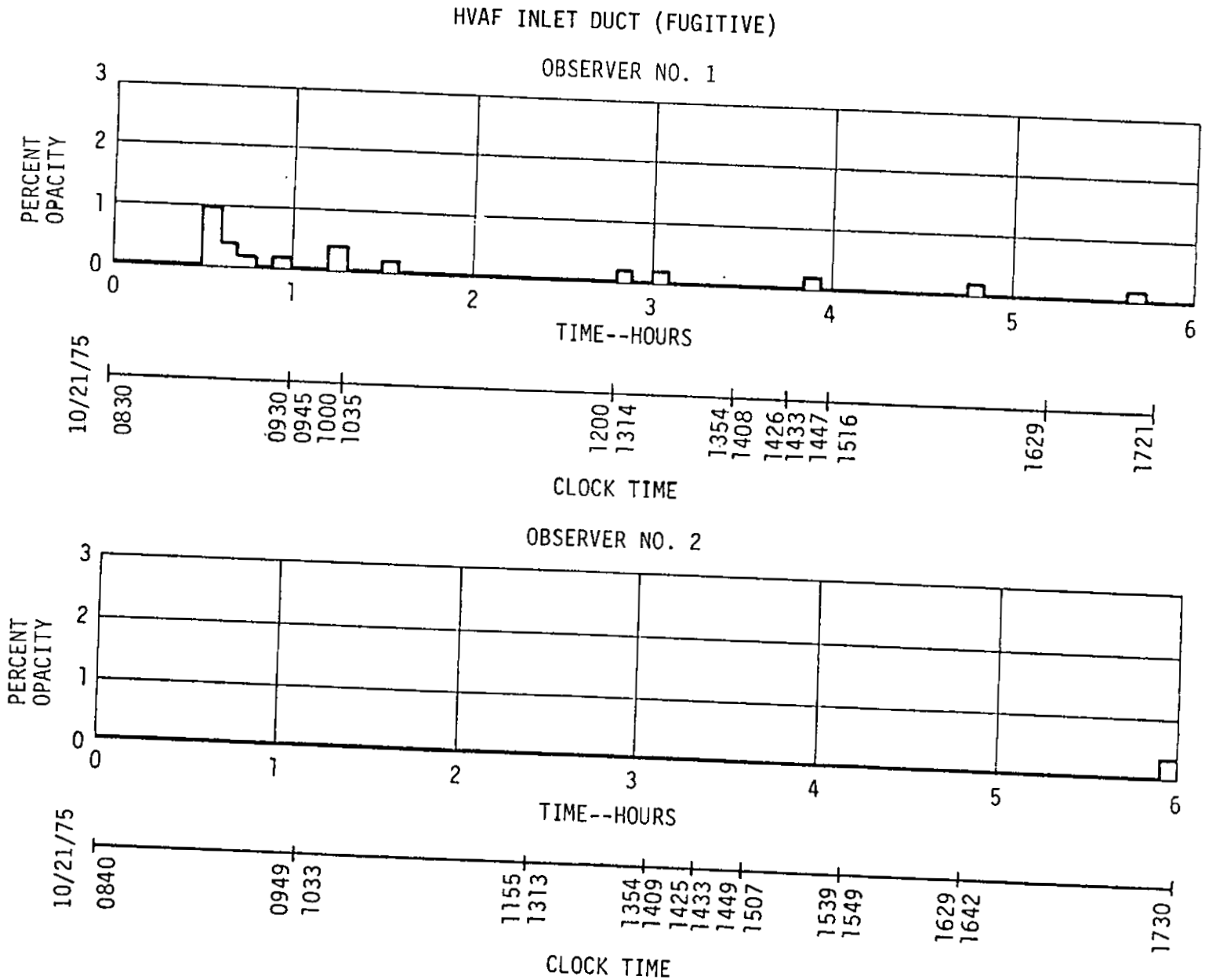

Figure C-5. Plant C.

SATURATOR SPRAY/DIP (FUGITIVE)

OBSERVER NO. 1

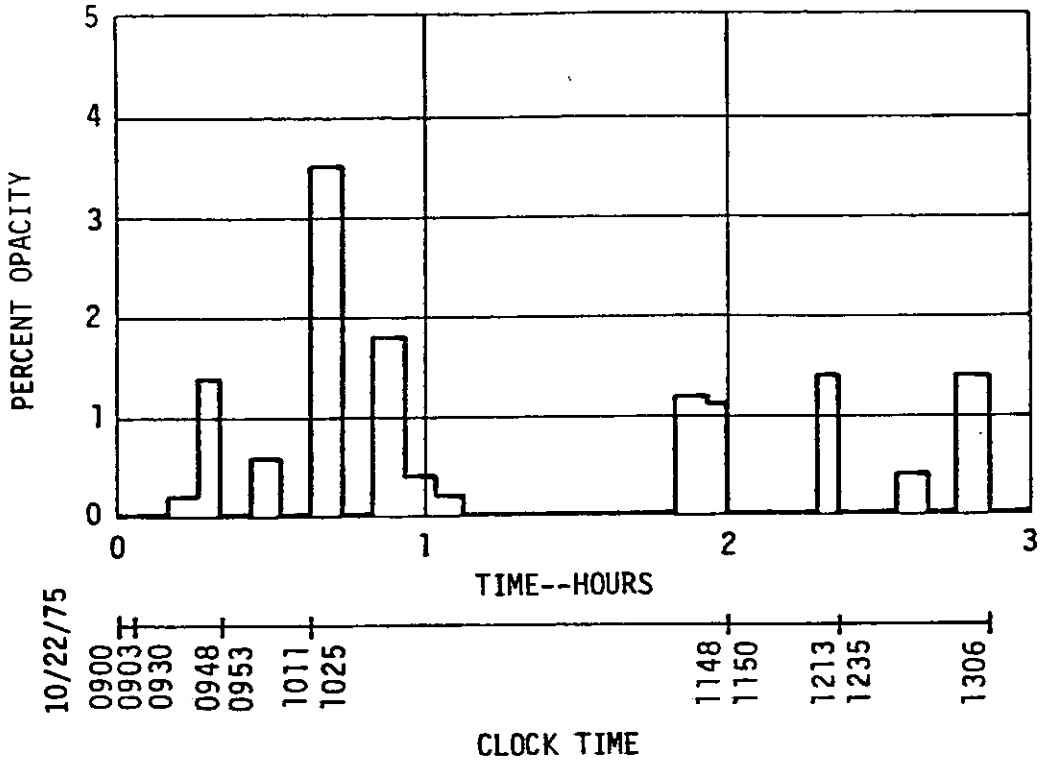

OBSERVER NO. 2

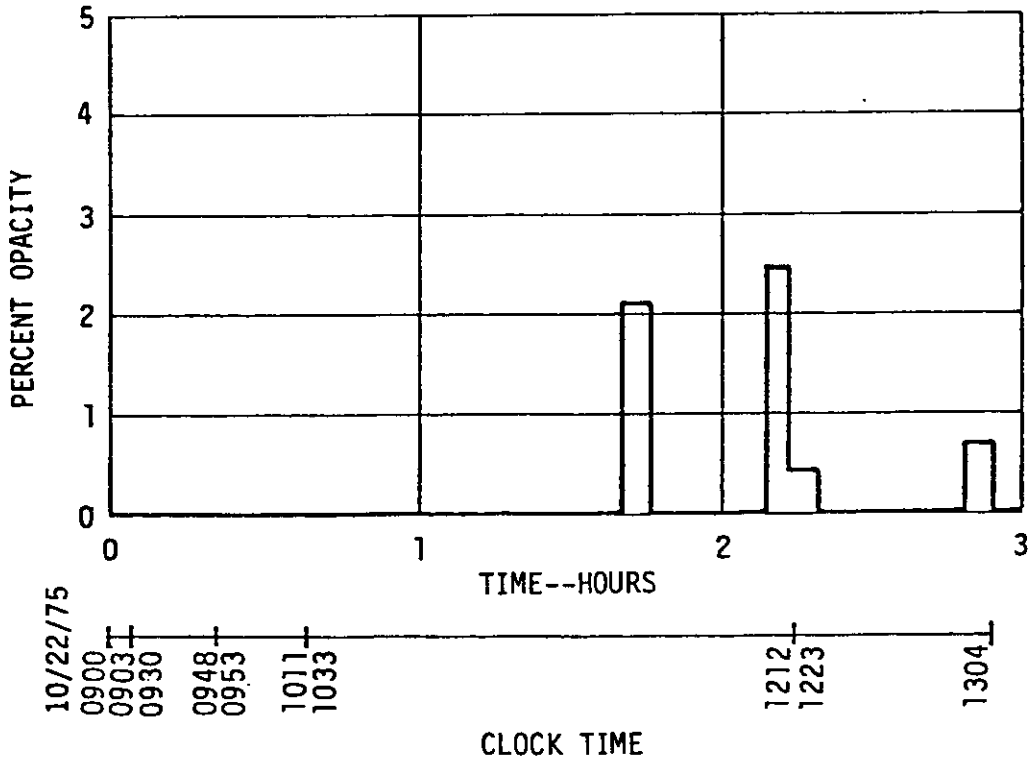

Figure C-6. Plant C.

SATURATOR STRIKE-IN AND COATER (FUGITIVE)

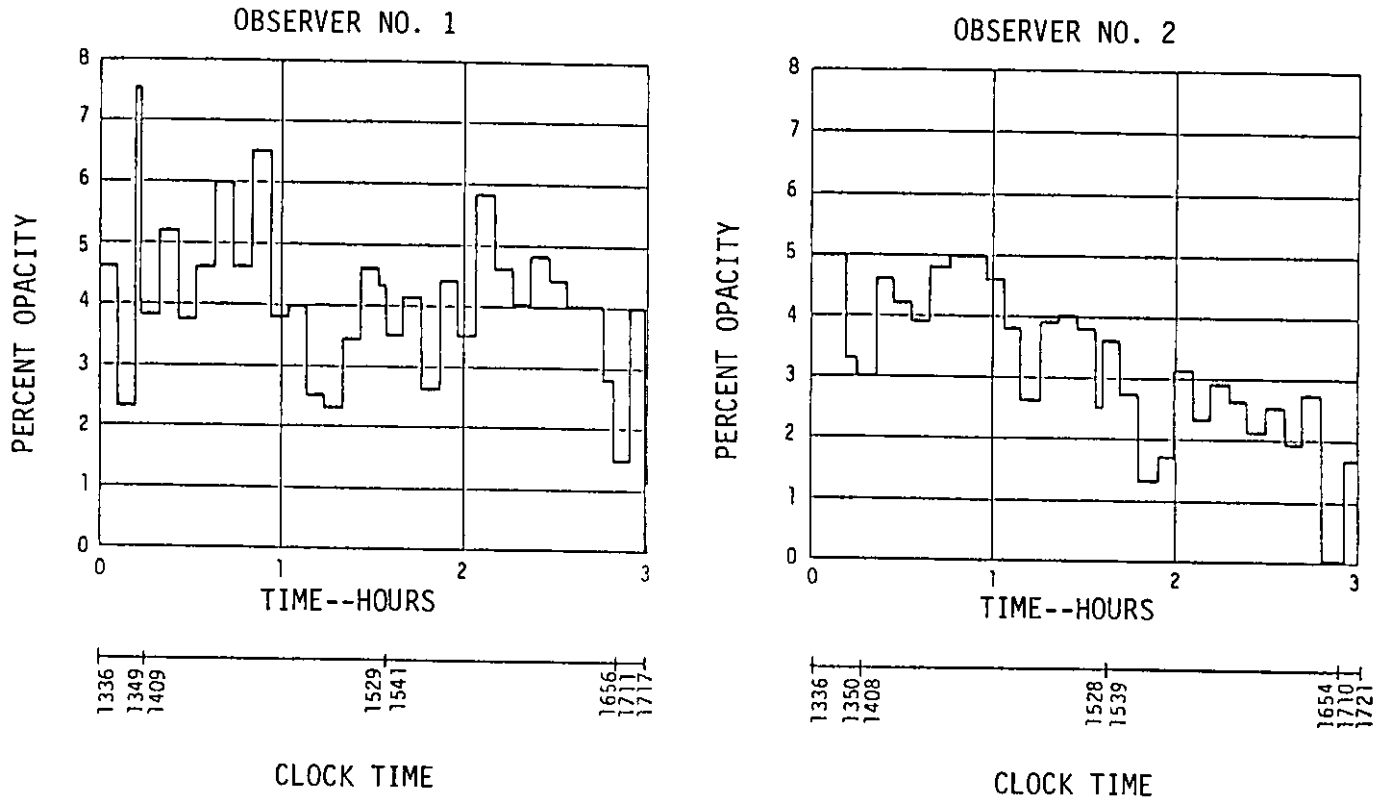

Figure C-7. Plant C.

TABLE C-10. PARTICULATE EMISSION TESTS SUMMARY: PERFORMANCE OF HVAF CONTROL DEVICE--PLANT C (AVERAGE OF TESTS)

Sample location	Metric Unit	Metric Inlet[a]	Metric Outlet	English Unit	English Inlet[a]	English Outlet
Volume of gas sampled	Nm^3[b]	2.85	3.69	DSCF[c]	100.557	130.406
Percent moisture by volume		2.00	2.51		2.00	2.51
Average stack temperature	°C	60.8	52.2	°F	142	126
Stack volumetric flow rate	Nm^3/s[d]	8.71	9.29	DSCFM[e]	18,462	19,681
Stack volumetric flow rate	m^3/s[f]	10.21	10.66	acfm[g]	21,636	22,596
Percent isokinetic		96.9	99.5		96.9	99.5
Production rate	Mg of product/h	19.07		Ton of product/h	21.03	
Particulates--probe, cyclone, and filter catch						
--	mg	2,728.2	55.5	lb	6.13	0.12
--	$kg/Nm^3 x10^{-3}$	.956	0.015	gr/DSCF	0.418	0.00700
--	$kg/m^3 x10^{-3}$	.815	0.013	gr/acf	0.356	0.00567
--	$kg/s x10^{-4}$	83.2	1.4	lb/h	66.0	1.11
	kg/Mg	1.57	0.027	lb/ton of product	3.14	0.053

Average mass collection efficiency = 98.3%

[a]Averages do not include Inlet Run CEL-3P.
[b]Dry normal cubic meters at 20°C, $101.7 x10^3$ PA.
[c]Dry standard cubic feet at 68°F, 29.92 in. Hg.
[d]Dry normal cubic meters per minute at 20°C, $101.7 x10^3$ Pa.
[e]Dry standard cubic feet per minute at 68°F, 29.92 in. Hg.
[f]Actual cubic meters per second.
[g]Actual cubic feet per minute.

TABLE C-11. POLYCYCLIC ORGANIC MATTER (POM) EMISSION TESTS SUMMARY--
PLANT C
(HAVF CONTROL DEVICE)

(METRIC)

Run number	Inlet CEL-5P	Outlet CEL-6P
Date	10/23/75	10/23/75
Volume of gas sampled--Nm^3[a]	1.68	3.56
Percent moisture by volume	1.26	0.90[b]
Average stack temperature--°C	53.9	51.7
Stack volumetric flow rate--Nm^3/s[c]	9.06	9.67
Stack volumetric flow rate--m^3/s[d]	10.34	10.9
Percent isokinetic	95.8	92.1

Polycyclic organic matter Component	Concentration $kg/Nm^3 x10^{-9}$ Inlet	Concentration $kg/Nm^3 x10^{-9}$ Outlet	Emission rate $kg/s x10^{-7}$ Inlet	Emission rate $kg/s x10^{-7}$ Outlet
Anthracene/Phenanthrene	254	34.8	23	3.36
Methyl anthracenes	668	48.1	60.6	4.65
Fluoranthene	13.7	0.7	1.24	0.068
Pyrene	48.7	1.8	4.42	0.174
Methyl pyrene/Fluoranthene	125	15.9	11.3	1.54
Benzo(c)phenanthrene	12	Not detected	1.08	Not detected
Cyrysene/Benz(a)anthracene	25	0.5	2.29	0.045
Methyl cyrysenes	72	0.5	6.55	0.050
Benzo fluoranthenes	0.6	0.2	0.057	0.020
Benz(a)pyrene	0.04	0.28[e]	0.0038	0.027[d]
Benz(e)pyrene	0.07		0.0065	
Perylene	2.7	Not detected	0.247	Not detected
3-Methylcholanthrene	3.6	Not detected	0.325	Not detected
TOTALS	1,226	102.7	111.26	9.94
% POM reduction = 91.1				

[a]Normal cubic meters at 21.1°C, $101.7x10^3$ Pa.
[b]Silica gel observed to be saturated during cleanup at end of run.
[c]Normal cubic meters per second at 21.1°C, $191.7x10^3$ Pa.
[d]Actual cubic meters per second.
[e]Benz(a)pyrene and Benz(e)pyrene combined and reported as one value.

TABLE C-11a. POLYCYCLIC ORGANIC MATTER (POM) EMISSION TESTS SUMMARY--
PLANT C
(HAVF CONTROL DEVICE)

(ENGLISH)

Run number	Inlet CEL-5P	Outlet CEL-6P
Date	10/23/75	10/23/75
Volume of gas sampled--DSCF[a]	59.167	125.605
Percent moisture by volume	1.26	0.09[b]
Average stack temperature--°F	129	125
Stack volumetric flow rate--DSCFM[c]	19,200	20,500
Stack volumetric flow rate--acfm[d]	21,900	23,100
Percent isokinetic	95.8	92.1

Polycyclic organic matter Component	Concentration gr/DSCFx10^{-6} Inlet	Concentration gr/DSCFx10^{-6} Outlet	Emission rate lb/hx10^{-3} Inlet	Emission rate lb/hx10^{-3} Outlet
Anthracene/Phenanthrene	111	15.2	18.3	2.67
Methyl anthracenes	292	21.0	48.1	3.69
Fluoranthene	6.00	0.307	0.987	0.0539
Pyrene	21.3	0.786	3.51	0.138
Methyl pyrene/Fluoranthene	54.6	6.95	8.98	1.22
Benzo(c)phenanthrene	5.22	Not detected	0.859	Not detected
Cyrysene/Benz(a)anthracene	11.1	0.203	1.82	0.0357
Methyl cyrysenes	31.6	0.227	5.20	0.0399
Benzo fluoranthenes	0.274	0.0921	0.0451	0.0162
Benz(a)pyrene	0.0183	0.123[e]	0.00301	0.0216[e]
Benz(e)pyrene	0.0313		0.00515	
Perylene	1.19	Not detected	0.196	Not detected
3-Methylcholanthrene	1.57	Not detected	0.258	Not detected
TOTALS	536	44.9	88.3	7.89
% POM reduction = 91.1				

[a]Dry standard cubic feet at 68°F, 29.92 in. Hg.
[b]Silica gel observed to be saturated during cleanup at end of run.
[c]Dry standard cubic feet per minute at 68°F, 29.92 in. Hg.
[d]Actual cubic feet per minute.
[e]Benz(a)pyrene and Benz(e)pyrene combined and reported as one value.

TABLE C-12. TOTAL HYDROCARBON EMISSION TESTS SUMMARY--PLANT C (HVAF CONTROL DEVICE)

(METRIC)

Date	Average total hydrocarbon concentration					
	ppmv, as CH_4		$kg/m^3 x 10^{-3}$		gr/DSCF	
	Inlet	Outlet	Inlet	Outlet	Inlet	Outlet
10/21/75	91	133	0.062	0.091	0.0272	0.0396
10/22/75	120	125	0.082	0.086	0.0359	0.0375
10/24/75	131	134	0.089	0.095	0.0387	0.0413

(ENGLISH)

Date	Average total hydrocarbon emission rate			
	$kg/s x 10^{-3}$		lb/h	
	Inlet	Outlet	Inlet	Outlet
10/21/75	53.80	82.91	4.27	6.58
10/22/75	70.18	79.76	5.57	6.33
10/24/75	77.74	88.70	6.17	7.04

TABLE C-13. FLAME IONIZATION DETECTOR (FID) DATA SUMMARY--PLANT C

Sampling location: HVAF inlet
Date: October 21-24, 1975
Data taken at three-minute intervals

Run	Total traverse points	Average gaseous hydrocarbon concentrations: Minimum ppm	Maximum ppm	Point average ppm	Point average kg/m^{3}x10^{-6}	Point average (gr/DSCFx10^{-3})	Total Volumetric flow Nm^3/sx10^{-4}	Total Volumetric flow (SCFM)	Total Pollutant mass rate kg/sx10^{-4}	Total Pollutant mass rate (lb/h)
CEL-1-THC	46	101.4	96.7	91.0	62.24	(27.2)	8.75	(18,547)	5.23	(4.15)
CEL-3-THC	47	112.1	128.8	120.4	82.15	(35.9)	8.71	(18,464)	7.50	(5.95)
CEL-7-THC	47	123.0	141.2	131.4	88.56	(38.7)	8.99	(19,039)	7.86	(6.24)
CEL-9-THC	30	119.3	134.8	126.7	86.04	(37.6)	5.58	(11,820)	4.85	(3.85)

TABLE C-14. FLAME IONIZATION DETECTOR (FID) DATA SUMMARY--PLANT C

Sampling location: HVAF outlet
Date: October 21-24, 1975
Data taken at three-minute intervals

Run	Total traverse points	Average gaseous hydrocarbon concentrations: Minimum ppm	Maximum ppm	Point average ppm	Point average $kg/m^3 x10^{-6}$	Point average (gr/DSCFx10^{-3})	Total: Volumetric flow $Nm^3/sx10^{-4}$	Volumetric flow (SCFM)	Pollutant mass rate $kg/sx10^{-4}$	Pollutant mass rate (lb/h)
CEL-2-THC	47	126.6	139.4	132.7	90.62	(39.6)	9.15	(19,389)	7.71	(6.12)
CEL-4-THC	48	118.2	133.0	125.3	85.81	(37.5)	9.47	(20,076)	7.89	(6.26)
CEL-8-THC	47	132.6	148.0	140.0	94.51	(41.3)	9.51	(20,160)	8.49	(6.74)

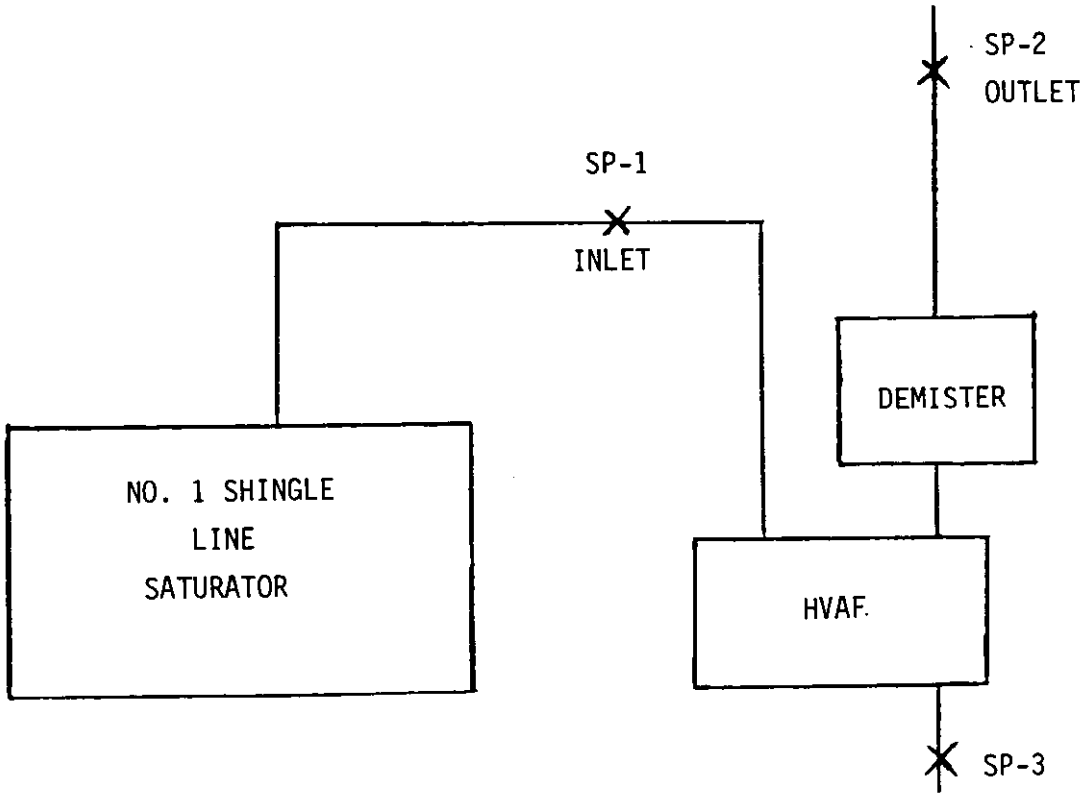

Figure C-8. Block diagram showing sampling locations--Plant D.

TABLE C-15. SUMMARY OF VISIBLE EMISSION DATA--PLANT D

Date	24-h clock time	Location/ type of discharge	Observer	Dist. to source m	(ft)	Direction from source	Wind direction	Wind velocity M/s	(mph)	Weather	Background	Time-opacity
9/17/75	0745-0823	A[a]	1	6.1	(20)	S	S-N	3.6-5.4	(8-12)	Overcast	Gray shed wall	38 min-0%
9/17/75	0745-0823	A	2	6.1	(20)	S	S	3.6-5.4	(8-12)	Overcast	Gray shed wall	38 min-0%
9/17/75	0815-0846	A	1	3.05	(10)	S	S-N	3.6-5.4	(8-12)	Overcast	Gray shed wall	31 min-0%
9/17/75	0815-0846	A	2	3.05	(10)	S	S	3.6-5.4	(8-12)	Overcast	Gray shed wall	31 min-0%
9/17/75	0906-0935	A	1	3.05	(10)	S	S-N	3.6-5.4	(8-12)	Overcast	Gray shed wall	29 min-0%
9/17/75	0906-0935	A	2	3.05	(10)	S	S	3.6-5.4	(8-12)	Overcast	Gray wall	29 min-0%
9/17/75	0907-0940	A	1	6.1	(20)	S	S-N	3.6-5.4	(8-12)	Overcast	Gray shed wall	33 min-0%
9/17/75	0907-0940	A	2	6.1	(20)	S	S	3.6-5.4	(8-12)	Overcast	Gray wall	33 min-0%
9/17/75	1245-1319	A	1	3.05	(10)	SE	N-S	3.6-5.4	(8-12)	Partly cloudy	Gray-black brick wall	34 min-0%
9/17/75	1245-1319	A	2	3.05	(10)	SE	N	3.6-5.4	(8-12)	Partly cloudy	Gray-black brick wall	34 min-0%
9/17/75	1415-1912	B[b]	1	6.1	(20)	SE	NE-SW	5.4-8.05	(12-18)	Overcast	White-gray clouds	10 min 45 s-10% 235 min 15 s-15%
9/17/75	1415-1912	B	2	6.1	(20)	SE	NE	5.4-8.05	(12-18)	Overcast	White-gray clouds	8 min 15 s-10% 236 min 45 s-15%
9/18/75	0827-0853	A	3	6.1	(20)	S	NA[c]	NA		Partly cloudy	Gray shed wall	25 min 45 s-15%
9/18/75	0842-1100	B	1	4.6	(15)	E	S-N	5.8-8.05	(13-18)	Partly cloudy	Light gray clouds and blue sky	138 min-15%
9/18/75	0842-1100	B	2	4.6	(15)	E	S	5.8-8.05	(13-18)	Partly cloudy	Light gray clouds and blue sky	138 min-15%
9/18/75	1105-1135	C[d]	1	18.3	(60)	NE	*	*	*	*	Dark gray wall	30 min-20%
9/18/75	1105-1135	C	2	18.3	(60)	NE	*	*	*	*	Dark gray wall	30 min-20%
9/18/75	1200-1827	D[f]	1	0.9-28.9	(3-95)	Coater end of hood	*	*	*	*	Gray brick wall	42 min 15 s- 0% 28 min 15 s- 5% 17 min 0 s-10% 4 min 30 s-15%

TABLE C-15. SUMMARY OF VISIBLE EMISSION DATA--PLANT D
(concluded)

Date	24-h clock time	Location/ type of discharge	Observer	Dist. to source m	Dist. to source (ft)	Direction from source	Wind direction	Wind velocity M/s	Wind velocity mph	Weather	Background	Time-opacity
9/18/75	1200-1827	D	2	0.9-28.9	(3-95)	Coater end of hood	*	*	*	*	Gray brick wall	28 min 30 s- 0% 31 min 45 s- 5% 14 min 30 s-10% 5 min 0 s-15%
9/19/75	0802-1115	D	1	0.9-28.9	(3-95)	Coater end of hood	*	*	*	*	Gray brick wall	84 min 15 s-0% 21 min 0 s-5% 3 min 45 s-10% 0 min 15 s-15%
9/19/75	0802-1115	D	2	0.9-28.9	(3-95)	Coater end of hood	*	*	*	*	Gray brick wall	68 min-0% 9 min 15 s-5% 2 min 45 s-10%
9/19/75	1117-1747	D	1	0.9-28.9	(3-95)	Saturator end of hood	*	*	*	*	Cream colored wall, dark green equipment	68 min 30 s-0% 63 min 45 s-5% 32 min 30 s-10% 15 min 30 s-15% 2 min 0 s-20%
9/19/75	1117-1747	D	2	0.9-28.9	(3-95)	Saturator end of hood	*	*	*	*	Light tan wall, green equipment	45 min 15 s-0% 71 min 0 s-5% 46 min 30 s-10% 3 min 45 s-15%

[a]A=coating tanker unloading area, hose coupling and associated piping.
[b]B=HEAF outlet stack from saturator hood No. 1, TP-2.
[c]NA=Not available.
[d]C=Leakage from top of saturator hood No. 1.
[e]*=Indoors.

TABLE C-16. PARTICULATE AND GASEOUS HYDROCARBON RESULTS OF SHINGLE LINE SATURATOR HVAF FILTER SYSTEM PLANT D

	Run 1		Run 2		Run 3		Average	
	SP1-1	SP2-1	SP1-2	SP2-2	SP1-3	SP2-3	SP-1	SP-2
Particulate Results[a]								
Front half train, TCE wash--mg	240.6	39.0	29.2	49.9	27.1	27.7	98.97	38.87
Front half train, acetone wash--mg	4.0	2.8	1.9	1.9	--	1.0	2.53	1.90
Prefilter, TCE wash--mg	1.1	--	0.9	--	0.4	--	0.80	--
Glass fiber filter catch--mg	322.4	31.2	264.0	39.9	311.5	50.5	299.30	40.53
Total front half--mg	568.1	73.0	296.0	91.7	340.7	79.2	401.60	81.30
Concentration--kg/Nm^{3}x10^{-3}	0.213	0.027	0.105	0.034	0.117	0.030	0.145	0.030
Concentration--gr/DSCF	0.093	0.012	0.046	0.015	0.051	0.013	0.0633	0.0133
Particulate emission rate:								
kg/sx10^{-4}	28.3	3.6	13.9	4.7	15.6	4.4	19.2	4.2
kg/Mg	--	--	--	--	--	--	0.16	0.035
lb/h	22.4	2.9	11.0	3.7	12.4	3.5	15.27	3.37
lb/ton	--	--	--	--	--	--	0.320	0.071
Collection efficiency--%	87.1		66.4		71.8		77.9	
Gaseous hydrocarbon results								
Minimum value--ppm	--	38.0	--	45.0	--	47.0	--	43.3
Maximum value--ppm	--	74.3	--	76.4	--	67.4	--	72.7
Weighted average value--ppm	--	58.3	--	64.7	--	59.3	--	60.8
Concentration--kg/Nm^{3}x10^{-3}	--	0.039	--	0.043	--	0.039	--	0.041
Concentration--gr/DSCF	--	0.017	--	0.019	--	0.017	--	0.018
Hydrocarbon emission rate:								
kg/sx10^{-4}	--	5.4	--	6.0	--	5.7	--	5.7
lb/h	--	4.27	--	--	--	4.50	--	4.51
Production rates							43.3 Mg/h (47.7 tons/h)	

[a]Weights are minus blanks.

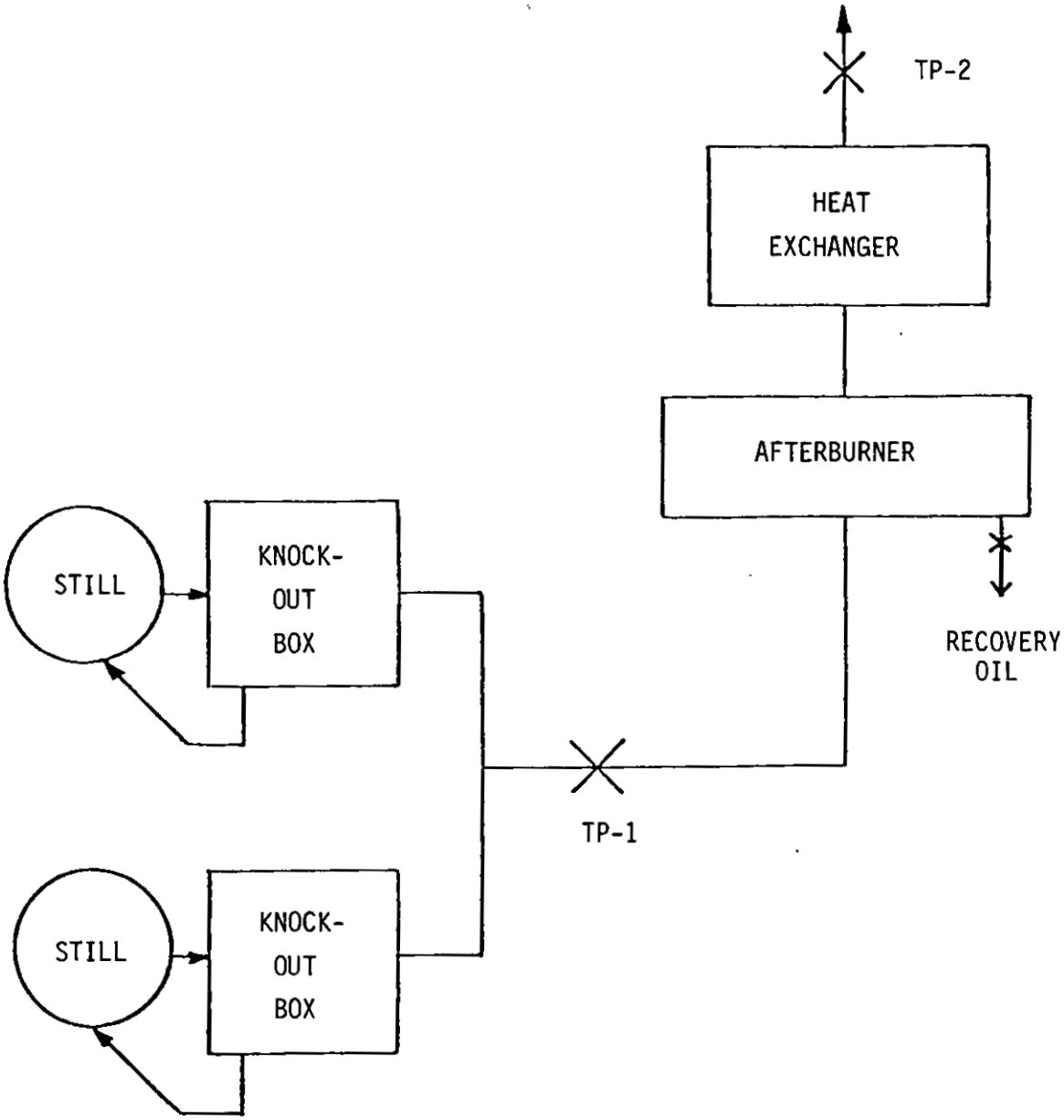

Figure C-9. Block diagram showing relative locations of process components and sample points--Plant E.

TABLE C-17. SUMMARY OF VISIBLE EMISSION DATA--PLANT E

Date	24-h clock time	Observer	Dist. to source m	Dist. to source (ft)	Direction from source	Wind direction	Wind velocity M/s	Wind velocity (mph)	Weather	Back-ground	Time-opacity
8/19/75	1247-1702	1	15.24-18.3	(50-60)	E-SE	E-S	2.24-4.5	(5-10)	Partly cloudy	Sky	243 min 30 s-0%
8/19/75	1247-1702	2	15.24-18.3	(50-60)	E-SE	S	3.6-5.4	(8-12)	Partly cloudy	Sky	245 min 30 s-0%
8/19/75	1712-1829	1	15.24-18.3	(50-60)	E	S-NE	2.24-4.5	(5-10)	Partly cloudy	Sky	78 min-0%
8/19/75	1712-1829	2	15.24	(50)	SE	S-N	2.24-4.5	(5-10)	Partly cloudy	Sky	78 min-0%
8/20/75	1333-1509	1	15.24-18.3	(50-60)	SE	S-SW	3.6-8.9	(8-20)	Partly cloudy	Sky	97 min-0%
8/20/75	1333-1509	2	15.24	(50)	SE	N-S	3.6-6.7	(8-15)	Partly cloudy	Sky	97 min-0%
8/20/75	1556-1728	1	18.3	(60)	E	S	2.24-4.5	(5-10)	Partly cloudy	Sky	93 min-0%
8/20/75	1556-1728	2	15.24	(50)	SE	SW-NE	3.6-5.4	(8-12)	Partly cloudy	Sky	93 min-0%
8/21/75	1008-1148	1	18.3	(60)	E	N-E	3.6-5.4	(8-12)	Clear	Sky	100 min 30 s-0%
8/21/75	1008-1148	2	18.3	(60)	E	NE-SW	3.6-5.4	(8-12)	Clear-partly cloudy	Sky	100 min 30 s-0%
8/21/75	1314-1752	1	15.24-24.4	(50-80)	E-SE	NE	3.6-5.4	(8-12)	Partly cloudy	Sky	258 min-0%
8/21/75	1314-1752	2	13.7-24.4	(45-80)	SE-SSE	NE-SW	2.24-5.4	(5-12)	Partly cloudy	Sky	258 min-0%

TABLE C-18. PERFORMANCE SUMMARY OF EMISSION REDUCTION SYSTEM FOR BLOWING STILLS SATURANT BLOWS--PLANT E (METRIC)

Run number	2		6		7		Average	
Date	8-20-75		8-25-75		8-26-75			
Stack conditions								
Sample location	A/B inlet	A/B outlet	A/B inlet	A/B outlet	A/B inlet	A/B outlet	A/B inlet	A/B outlet
Sample number	B-3	B-4	B-11	B-12	B-13	B-14	--	--
Volumetric flow rate,--Nm^3/s	0.81	4.09	0.89	4.0	0.94	4.48	0.88	4.19
Stack temperature--°C	200.6	203.9	207.2	200.6	189.3	192.2	198.9	198.9
Moisture--vol. %	44.7	18.8	41.0	20.8	27.2	11.6	37.6	17.1
Production rates							24.22 Mg/h	
Particulates--probe, upstream impingers, prefilter, filter								
$kg/m^3 x10^{-3}$	38.08	0.654	25.95	0.20	19.59	0.238	27.87	0.364
$kg/s x10^{-4}$	285.9	28.5	220.1	7.9	160.7	10.2	222.3	15.5
kg/Mg							3.31	0.23
Afterburner efficiency, percent								
This run	90.0		96.4		93.6			
Average, three runs			93.3					
Gaseous hydrocarbons								
ppm as CH_4	9,152	78.8	8,146	7.1	5,726	3.3	7,675	29.7
$kg/m^3 x10^{-3}$	6.18	0.053	5.50	0.005	3.87	0.002	5.18	0.02
$kg/s x10^{-4}$	49.7	2.2	48.0	0.2	35.9	0.1	44.5	0.8
Afterburner efficiency, percent								
This run	95.6		99.6		99.7			
Average, three runs			98.3					

TABLE C-18a. PERFORMANCE SUMMARY OF EMISSION REDUCTION SYSTEM FOR BLOWING STILLS
SATURANT BLOWS--PLANT E
(ENGLISH)

Run number	2		6		7		Average	
Date	8-20-75		8-25-75		8-26-75			
Stack conditions								
Sample location	A/B inlet	A/B outlet	A/B inlet	A/B outlet	A/B inlet	A/B outlet	A/B inlet	A/B outlet
Sample number	B-3	B-4	B-11	B-12	B-13	B-14	--	--
Volumetric flow rate,--DSCFM	1,715	8,673	1,884	8,476	2,001	9,485	1,867	8,878
Stack temperature--°F	393	399	405	393	371	378	390	390
Moisture--vol. %	44.7	18.8	41.0	20.8	27.2	11.6	37.6	17.1
Production rates							26.7 tons/h	
Particulates--probe, upstream impingers, prefilter, filter								
gr/DSCF	16.64	0.286	11.34	0.087	8.561	0.104	12.18	0.159
lb/h	226.9	22.6	174.7	6.3	127.5	8.1	176.4	12.3
lb/ton							6.61	0.461
Afterburner efficiency, percent								
This run	90.0		96.4		93.6			
Average, three runs			93.3					
Gaseous hydrocarbons								
ppm as CH_4	9,152	78.8	8,146	7.1	5,726	3.3	7,675	29.7
gr/DSCF	2.699	0.023	2.403	0.002	1.689	0.001	2.264	0.009
lb/h	39.43	1.72	38.06	0.15	28.49	0.08	35.33	0.65
Afterburner efficiency, percent								
This run	95.6		99.6		99.7			
Average, three runs			98.3					

TABLE C-19. PERFORMANCE SUMMARY OF EMISSION REDUCTION SYSTEM FOR BLOWING STILLS COATING BLOWS--PLANT E (METRIC)

Run number	3		4		5		Average	
Date	8-21-75		8-22-75		8-24-75			
Stack conditions								
Sample location	A/B inlet	A/B outlet	A/B inlet	A/B outlet	A/B inlet	A/B outlet	A/B inlet	A/B outlet
Sample number	B-5	B-6	B-7	B-8	B-9	B-10	--	--
Volumetric flow rate--Nm^3/s	0.867	4.27	0.917	4.51	0.89	4.02	0.89	4.27
Stack temperature--°C	215	199.4	221.1	194.4	210.6	194.4	215.6	196.1
Moisture--vol. %	33.6	15.6	33.9	15.0	34.9	16.5	34.1	15.7
Production rates							8.07 Mg/h	
Particulates--probe, upstream impingers, prefilter, filter,								
$kg/Nm^3 \times 10^{-3}$	34.5	0.28	35.3	0.15	33.0	0.23	33.4	0.22
$kg/s \times 10^{-4}$	265.6	11.3	288.9	6.8	267.2	8.9	273.9	9.1
kg/Mg							12.21	0.405
Afterburner efficiency, percent								
This run	95.7		97.6		96.7			
Average, three runs			96.7					
Gaseous hydrocarbons								
ppm as CH_4	6,420	69.2	7,066	103.3	6,100	21.7	6,506	64.7
$kg/Nm^3 \times 10^{-3}$	4.33	0.046	4.77	0.07	4.12	0.014	4.39	0.043
$kg/s \times 10^{-4}$	36.3	2.0	42.5	3.1	36.2	0.6	38.4	1.9
Afterburner efficiency, percent								
This run	94.6		92.6		98.4			
Average, three runs			95.2					

TABLE C-19a. PERFORMANCE SUMMARY OF EMISSION REDUCTION SYSTEM FOR BLOWING STILLS COATING BLOWS--PLANT E (ENGLISH)

Run number	3		4		5		Average	
Date	8-21-75		8-22-75		8-24-75			
Stack conditions								
Sample location	A/B inlet	A/B outlet	A/B inlet	A/B outlet	A/B inlet	A/B outlet	A/B inlet	A/B outlet
Sample number	B-5	B-6	B-7	B-8	B-9	B-10	--	--
Volumetric flow rate--DSCFM	1,838	9,045	1,943	9,549	1,881	8,524	1,887	9,039
Stack temperature--°F	419	391	430	382	411	382	420	385
Moisture--vol. %	33.6	15.6	33.9	15.0	34.9	16.5	34.1	15.7
Production rates								8.9 tons/h
Particulates--probe, upstream impingers, prefilter, filter,								
gr/DSCF	15.06	0.123	15.42	0.066	14.41	0.099	14.60	0.096
lb/h	210.8	9.0	299.3	5.4	212.1	7.1	217.4	7.2
lb/ton							24.42	0.81
Afterburner efficiency, percent								
This run	95.7		97.6		96.7			
Average, three runs			96.7					
Gaseous hydrocarbons								
ppm as CH_4	6,420	69.2	7,066	103.3	6,100	21.7	6,506	64.7
gr/DSCF	1.894	0.020	2.084	0.030	1.799	0.066	1.919	0.019
lb/h	28.83	1.57	33.73	2.49	28.75	0.46	30.44	1.51
Afterburner efficiency, percent								
This run	94.6		92.6		98.4			
Average, three runs			95.2					

TABLE C-20. SUMMARY OF POM DATA--PLANT E
(METRIC)

Component	Raw data (POM by GC-MS No correction for blanks), μg: Inlet (EPA Sample S75-006-112 & 113; BCL Sample 2-1)	Raw data (POM by GC-MS No correction for blanks), μg: Outlet (EPA Sample S75-006-106 BCL Sample 15)	POM in blank μg (EPA Sample S75-006-155; BCL Sample 16)	POM in sample (corrected for blank), μg: Inlet	POM in sample (corrected for blank), μg: Outlet	POM, loading in gas stream μg/Nm³: Inlet	POM, loading in gas stream μg/Nm³: Outlet
Anthracene/ Phenanthrene	41,152	79.0	0.45	41,152	78.5	18,049	25.5
Methyl anthracenes	112,128	69.3	<0.1	112,128	69.3	49,179	22.5
Fluoranthene	1,920	6.0	0.1	1,920	5.9	842	1.92
Pyrene	2,816	7.8	0.1	2,816	7.7	1,235	2.50
Methyl pyrene/ Fluoranthene	44,096	51.8	<0.1	44,096	51.8	19,340	16.8
Benzo(c)phenanthrene	ND[a]	1.0	ND	--	1.0	--	0.32
Chrysene/Benz(a) anthracene	12,032	4.0	<0.1	12,032	4.0	5,227	1.30
Methyl chrysenes	39,360	3.5	<0.1	39,360	3.5	17,263	1.14
Benzo fluoranthenes	1,152	4.7	<0.1	1,152	4.7	505	1.53
Benz(a)pyrene[b]	512	4.5[c]	0.1[c]	512	4.5[c]	225	1.46[c]
Benz(e)pyrene	896			896		393	
Perylene	ND	ND	ND	--	--	--	--
3-Methycholanthrene							
Indeno(1,2,3,-cd)pyrene							
Benzo(ghi)perylene							
Dibenzo(a,h)anthracene							
Dibenzo(c,g)carbazole							
Dibenz(ai and ah)pyrenes							
Coronene							
TOTAL						112,308	74.97
Sample volume--Nm³	2.16	3.08					

[a]ND=No data.
[b]Separation of Benz(a)pyrene and Benz(e)pyrene was conducted only on one inlet sample due to cost limitations.
[c]Benz(a)pyrene and Benz(e)pyrene combined and reported as one value.

TABLE C-20a. SUMMARY OF POM DATA--PLANT E
(ENGLISH)

Component	Raw data (POM by GC-MS No correction for blanks) grx10-4 Inlet (EPA Sample S75-006-112 & 113; BCL Sample 2-1)	Raw data (POM by GC-MS No correction for blanks) grx10-4 Outlet EPA Sample S75-006-106 BCL Sample 15)	POM in blank grx10-4 (EPA Sample S75-006-155; BCL Sample 16)	POM in sample (corrected for blank), grx10-4 Inlet	POM in sample (corrected for blank), grx10-4 Outlet	POM, loading in gas stream gr/DSCFx10-7 Inlet	POM, loading in gas stream gr/DSCFx10-7 Outlet
Anthracene/ Phenanthrene	6,351	12	0.07	6,351	12	78,870	111
Methyl anthracenes	17,304	11	<0.015	17,304	11	4,910	98
Fluoranthene	296	0.9	0.015	296	0.9	3,680	8
Pyrene	435	1.2	0.015	435	1.2	5,400	11
Methyl pyrene/ Fluoranthene	6,805	8	<0.015	6,805	8	84,520	73
Benzo(c)phenanthrene	ND[a]	0.2	ND	--	0.2	--	1.4
Chrysene/Benz(a) anthracene	1,857	0.6	<0.015	1,857	0.6	22,840	5.7
Methyl chrysenes	6,074	0.5	<0.015	6,074	0.5	75,440	5
Benzo fluoranthenes	178	0.7	<0.015	178	0.7	2,210	6.7
Benz(a)pyrene[b]	79	0.7[c]	<0.015[c]	79	0.7[c]	980	6.4[c]
Benz(e)pyrene	138	ND	ND	138	--	1,720	--
Perylene	ND			--	--	--	--
3-Methycholanthrene							
Indeno(1,2,3,-cd)pyrene							
Benzo(ghi)perylene							
Dibenzo(a,h)anthracene							
Dibenzo(c,g)carbazole							
Dibenz(ai and ah)pyrenes							
Coronene							
TOTAL						490,780	328
Sample volume, DSCF	76.4	109.2					

[a]ND=No data.
[b]Separation of Benz(a)pyrene and Benz(e)pyrene was conducted only on one inlet sample due to cost limitations.
[c]Benz(a)pyrene and Benz(e)pyrene combined and reported as one value.

TABLE C-21. SO_2 AND NOx READINGS BY CONTINUOUS MONITORING ANALYSIS--PLANT E[a]

	Inlet	Outlet
	Sulfur dioxide	
Saturant blow:		
Run	B-11[b]	B-10[e]
Range, ppm	<400-730[c]	0-350
Mean, ppm	NA[d]	141
Coating blow:		
Run	B-11[f]	B-10
Range, ppm	<400-920[c]	46-330
Mean, ppm	NA[d]	166
	Nitrogen oxides[g]	
Saturant blow:		
Run	B-9	B-12
Range, ppm	0-1,600	245-500
Mean, ppm	902	391
Coating blow:		
Run	B-9	B-12[f]
Range, ppm	60-1,900	50-435
Mean, ppm	814	260

[a] SO_2 data are from EnviroMetrics analyzer; NO_x data are from DynaScience analyzer.
[b] Data taken during a portion of a coating blow representing last 10 minutes of saturant blow.
[c] Calibration gas cylinders empty at end of run and, thus, analyzer calibration could not be verified.
[d] Mean values not available as complete blow was not sampled.
[e] Data taken during saturant blow preceeding coating blow for which B-10 particulate samples were collected.
[f] This coating blow did not appear normal as flow was stopped during the process.
[g] No SO_2 scrubber was used ahead of the analyzer used to make the NO_x measurements. Thus, they may contain a contribution due to the SO_2, as well as NO_x.

TABLE C-22. ALDEHYDE RESULTS--PLANT E
(METRIC)

Run number	Date	Clock time	Gas sample volume, Nm^3[a]	Aldehyde concentration, mg HCHO/Nm^3[b]	Stack flow rate Nm^3/s	Emission rate kg/sx10^{-4}
AL-1-IN	8/22/75	1009-1021	0.0269	713.8	0.9	6.42
AL-2-IN	8/22/75	1200-1231	0.0812	1,428.6	0.9	12.86
AL-3-IN	8/24/75	1558-1616	0.0538	542.8	0.88	4.81
AL-4-OUT	8/24/75	1603-1616	0.0790	7.6	4.0	0.30
AL-5-IN	8/24/75	1719-1739	0.0591	296.1	0.88	2.53
AL-6-OUT	8/24/75	1724-1757	0.0948	4.4	4.0	0.18
AL-7-IN	8/25/75	1130-1147	0.0487	2,218.8	0.93	20.72
AL-8-OUT	8/25/75	1135-1205	0.0801	1,260.9	4.45	56.11
AL-9-OUT	8/27/75	1237-1437	0.3085	14.6	4.3	0.63
Average inlet				1,040.6		9.47
Average outlet (includes run AL-8)				321.9		14.31
Average outlet (without run AL-8)				8.9		0.37
Efficiency (without run AL-8)						96.3

[a]Corrected to standard conditions, 20°C and 1.01×10^5 Pa.
[b]Results corrected for blank.

TABLE C-22a. ALDEHYDE RESULTS--PLANT E
(ENGLISH)

Run number	Date	Clock time	Gas sample volume, DSCF[a]	Aldehyde concentration gr/DSCFx10^{-4}[b]	Stack flow rate DSCFM	Emission rate lb/hx10^{-4}
AL-1-IN	8/22/75	1009-1021	0.95	312	1,907	5.09
AL-2-IN	8/22/75	1200-1231	2.9	624	1,907	10.21
AL-3-IN	8/24/75	1558-1616	1.9	237	1,865	3.82
AL-4-OUT	8/24/75	1603-1616	2.8	3.3	8,476	0.24
AL-5-IN	8/24/75	1719-1739	2.1	129	1,865	2.01
AL-6-OUT	8/24/75	1724-1757	3.3	1.9	8,476	0.14
AL-7-IN	8/25/75	1130-1147	1.7	970	1,971	16.44
AL-8-OUT	8/25/75	1135-1205	2.8	551	9,429	44.52
AL-9-OUT	8/27/75	1237-1437	10.9	6.4	9,111	0.50
Average inlet				455		7.52
Average outlet (includes run AL-8)				141		11.36
Average outlet (without run AL-8)				3.9		0.29
Efficiency (without run AL-8)						96.3

[a]Corrected to standard conditions, 68°F and 29.92 in. Pa.
[b]Results corrected for blank.

TABLE C-23. SUMMARY OF VISIBLE EMISSION DATA--PLANT F

Date	24-h clock time	Observer	Dist. to source m	Dist. to source (ft)	Direction from source	Wind direction	Wind velocity M/s	Wind velocity (mph)	Weather	Back-ground	Time-opacity
7/22/75	1000-1300	A	12.2	(40)	E	SW	0.9-2.2	(2-5)	Partly cloudy	Sky	179 min 45 s- 0% 15 s-10%
7/22/75	1000-1300	B	12.2	(40)	E	SW	0.9-2.2	(2-5)	Partly cloudy	Sky	180 min-0%
7/22/75	1400-1700	C	15. 3	(50)	SW	SW	0.9-6.7	(2-15)	Partly cloudy	Sky	180 min-0%
7/22/75	1400-1700	D	15. 3	(50)	SW	SW	0.9-6.7	(2-15)	Partly cloudy	Sky	180 min-0%
7/23/75	800-1100	A	12.2	(40)	E	S	0.9-2.2	(2-5)	Overcast	Sky	180 min-0%
7/23/75	800-1100	B	12.2	(40)	E	S	0.9-2.2	(2-5)	Overcast	Sky	180 min-0%
7/23/75	1100-1400	E	15.3	(50)	W	S	0.9-4.5	(2-10)	Overcast, rain	Sky(1100-1130), dark tank (1130-1400)	180 min-0%
7/23/75	1100-1400	F	15.3	(50)	W	S	0.9-4.5	(2-10)	Partly cloudy, rain	Sky(1100-1130), dark tank (1130-1400)	180 min-0%

TABLE C-24. SUMMARY OF VISIBLE EMISSIONS--PLANT G

Date: 6/11/74

Type of plant: Crushed stone--conveyor transfer point

Type of discharge: Stack

Distance from observer to discharge point: 18.3 m (60 ft)

Location of discharge: Baghouse

Height of observation point: Ground-level

Height of point of discharge: 2.44 m (8 ft)

Direction of observer from discharge point: North

Description of background: Grey apparatus

Description of sky: Clear

Wind direction: Westerly

Wind velocity: 0 to 4.47 m/s (0 to 10 mi/h)

Color of plume: None

Detached plume: No

Duration of observation: 240 minutes

Summary of Average Opacity

Set number	Time		Opacity	
	Start	End	Sum	Average
1 through 30	10:40	1:40	0	0
31 through 40	1:45	4:45	0	0

Readings were 0 percent opacity during all periods of observation.

TABLE C-25. SUMMARY OF VISIBLE EMISSIONS--PLANT H

Date: 11/21/74

Type of plant: Crushed stone--finishing screens

Type of discharge: Stack

Distance from observer to discharge point: 61 m (200 ft)

Location of discharge: Baghouse

Height of observation point: 15.2 m (50 ft)

Height of point of discharge: 12.2 m (40 ft)

Direction of observer from discharge point: Northwest

Description of background: Dark woods

Description of sky: Overcast

Wind direction: Easterly

Wind velocity: 4.47 to 13.4 m/s (10 to 30 mi/h)

Color of plume: White

Detached plume: No

Duration of observation: 240 minutes

Summary of Average Opacity

Set number	Time		Opacity	
	Start	End	Sum	Average
1 through 40	12:10	4:10	0	0

Readings were 0 percent opacity during all periods of observation.

TABLE C-26. SUMMARY OF VISIBLE EMISSIONS--PLANT J

Date: 9/18/74

Type of plant: Crushed stone--finishing screens

Type of discharge: Stack

Distance from observer to discharge point: 91.44 m (300 ft)

Location of discharge: Baghouse

Height of observation point: 12.2 m (40 ft)

Height of point of discharge: 17.76 m (55 ft)

Direction of observer from discharge point: North

Description of background: Trees

Description of sky: Clear

Wind direction: Northerly

Wind velocity: 2.235 to 4.47 m/s (5 to 10 mi/h)

Color of plume: None

Detached plume: No

Duration of observation: 240 minutes

Summary of Average Opacity

Set number	Time		Opacity	
	Start	End	Sum	Average
1 through 40	8:10	12:30	0	0

Readings were 0 percent opacity during all periods of observation.

TABLE C-27. SUMMARY OF VISIBLE EMISSIONS--PLANT K

Date: 11/16/74 - 11/19/74

Type of plant: Crushed stone--finishing screens and bins

Type of discharge: Stack

Distance from observer to discharge point: 36.58 m (120 ft)

Location of discharge: Baghouse

Height of observation point: Ground-Level

Height of point of discharge: 0.15 m (0.5 ft)

Direction of observer from discharge point: South

Description of background: Hillside

Description of sky: Clear

Wind direction: Westerly

Wind velocity: 0.894 to 4.47 m/s (2 to 10 mi/h)

Color of plume: None

Detached plume: No

Duration of observation: 11/19/74: 120 minutes; 11/19/74: 60 minutes

Summary of Average Opacity

Set number		Time		Opacity	
		Start	End	Sum	Average
11/18/74:	1 through 10	12:50	1:50	0	0
	11 through 20	1:50	2:00	0	0
11/19/74	21 through 30	9:05	10:05	0	0

Readings were 0 percent opacity during all periods of observation.

TABLE C-28. SUMMARY OF VISIBLE EMISSIONS--PLANT L

Date: 9/30/76

Type of plant: Mica

Type of discharge: Fugitive

Distance from observer to discharge point: 2.13 m (7 ft)

Location of discharge: Bagging operation

Height of observation point: Ground-level

Height of point of discharge: 0.91 m (3 ft)

Direction of observer from discharge point: N/A

Description of background: Indoors

Description of sky: N/A

Wind direction: N/A

Wind velocity: N/A

Color of plume: N/A

Detached plume: N/A

Duration of observation: 1 hour

Summary of Data

Opacity, percent	Total time equal to or greater than given opacity	
	Min.	Sec.
5	0	0
10	0	0
15	0	0
20	0	0
25	0	0

APPENDIX D. EMISSION MEASUREMENT AND CONTINUOUS MONITORING

D.1 EMISSION MEASUREMENT METHODS

Particulate pollutants in the form of organic solids and oils are generated in the manufacture of asphalt roofing products. Reference Method 26 was developed to measure these emissions using Reference Method 5 as a base, and then making modifications suitable for collecting the singular type of particulate emission.

Method development tests and emission measurements were conducted at seven asphalt roofing plants. These studies resulted not only in obtaining measurements of particulate emissions, but also in developing a particulate sampling procedure, Reference Method 26, for isokinetic collection of representative particulate samples and determination of the particulate emission concentration. Reference Method 26 is basically a modification of Reference Method 5. The major differences between the two methods include:

1. Change in filtration temperature from 120°C to 40°C (248°F to 104°F).

The physical state of organic matter is a function of temperature. Therefore, it is necessary to select a filtration temperature that provides a consistent basis for evaluating the different control systems and the emissions from different plants. The 40°C (104°F) upper limit was selected to be consistent with the optimum operating temperature of 40°C (104°F) for the collection systems, i.e. filtration and electrostatic precipitation.

2. Use of a precollector filter to reduce the oil droplet loading on the primary filter.

This change was necessary to prevent oil from seeping through the glass-fiber filter mat during periods of high droplet concentrations. A

procedure to avoid the necessity of quantitatively removing the oil from the precollector was added to the method. This procedure involves weighing the precollector system before and after sampling to obtain the mass collected by difference. Use of this precollector is optional in Reference Method 26 and is intended for use when sampling emissions from the blowing still control device.

3. Change in cleanup reagent from acetone to 1,1,1-trichloroethane.

Sample cleanup and recovery procedures were also developed and tested during the method development program. Various solvents were used, e.g., acetone, chloroform, hexane, 1,1,1-trichloroethane, diethyl ether, methylene chloride, and trichloroethylene. The chlorinated hydrocarbons proved to be the most effective solvents. Chloroform and methylene chloride were rejected as unsafe due to the toxic chemical exposure criteria established by OSHA. The solvent, 1,1,1-trichloroethane (TCE) was decided upon because it was most effective in dissolving the baked-on oil and tars and, due to its lower vapor pressure, was potentially less toxic than the other solvents.

4. Change in analytical procedure to minimize sample loss through evaporation.

In the laboratory the cleanup reagent presented some problems. The low vapor pressure of TCE caused an increase in the time necessary to evaporate the samples at ambient temperature to a final weight. Experiments were conducted to quantify the loss of light hydrocarbons by condensing the vapors from the evaporation process and analyzing them by gas chromatography. Results showed that the hydrocarbon loss for outlet sample fractions was minimal.

A continuous weight loss was recorded for the samples over a period of several weeks after removal of the condenser. The weight loss was most significant for inlet samples. The outlet samples also continued to lose weight, but to a lesser degree. Consequently, the criterion of "constant weight" was defined as "a less than 10 percent or 2 mg (whichever is greater) mass change between two sequential weighings twenty-four hours apart." Most samples weighed in this manner reached a constant weight between the 24 to 48 hour weighings.

5. Collection and analytical procedure for condensed water.

In cases where moisture contents of the stack gases were above 10 percent, condensation in the filtration section of the sample train occurred. These conditions did not happen when sampling saturator line emissions, but did occur during the blowing still tests. By cooling the sample gas to 40°C (104°F) in the probe and precollector cyclone, the moisture was trapped in the cyclone collection flask. In the analyses, the oil was extracted from the water phase using a separatory funnel and TCE. The remaining water fraction was evaporated at 100°C (212°F), desiccated, and weighed.

D.1.1 Other Emission Test Procedures

Previous investigators used test methods which differed from the EPA approach. These methods, e.g., LAAPCD and conventional Method 5 including impinger analysis, measured both filterable and condensible hydrocarbons as particulate. The gaseous hydrocarbons were measured by flame ionization analysis; the sample gas, however, was taken directly from the stack. The gases were neither filtered nor cooled to 40°C (104°F). In some cases the data gave similar emission rates. In other cases, large differences occurred. Since EPA did not conduct comparative tests, it cannot be determined if these differences were due to process operating conditions or to differences in the test methods.

Visible emissions were measured by Method 9. Fugitive emissions were measured by Method 22.

D.2 CONTINUOUS MONITORING

The transmissometer is not ideally suited to the measurement of opacity in the effluent gas stream from an asphalt roofing plant. The effects of variable stack gas temperatures can cause the readings of the transmissometer to lack any correlation with Reference Method 9 measurements. For example, by increasing the stack temperature, the oil droplets that cause the visible emissions will be converted into a gas which would not be detected by the transmissometer but which will recondense and be visible in the atmosphere. Depending on stack temperature at the measurement point, the transmissometer may be a useful tool for monitoring operation and maintenance.

D.3 PERFORMANCE TEST METHODS

Performance Test Method 26, which is recommended for the measurement of particulate emissions from asphalt roofing processes, is essentially a modification of Reference Method 5. Changes were made in the sample filtration temperature and in the cleanup and analysis. The procedure is sufficiently similar to Method 5 so that test personnel experienced with Method 5 should have little difficulty with Method 26.

The asphalt roofing industry has two major processes, each with peculiar problems which hamper the performance of the emission test. The asphalt saturator line is a continuous process, subject to numerous line speed fluctuations and stoppages, thus making coordination of testing with the process essential. Extra care must be used to maintain the sample intergrity during these times.

The blowing still facility is a batch process. The process may last several hours. Emissions, flow rates, moisture contents, and temperatures are a function of time. Careful attention is required to ensure that the sample collected is representative of the emission and the process as defined in the regulation.

Sampling costs for a test consisting of three Method 26 runs is estimated to be about $8,000 to $12,000. If in-plant personnel are used to conduct the tests, the costs will be somewhat less.

Method 9 is recommended for measurement of opacity from stacks and similarly confined emission sources. Method 22 is recommended for ths determination of the frequency of visible fugitive emissions produced during material processing, handling, and transfer operations.

TECHNICAL REPORT DATA
(Please read Instructions on the reverse before completing)

1. REPORT NO. EPA-450/3-80-021a	2.	3. RECIPIENT'S ACCESSION NO.
4. TITLE AND SUBTITLE Asphalt Roofing Manufacturing Industry - Background Information for Proposed Standards		5. REPORT DATE June 1980
		6. PERFORMING ORGANIZATION CODE
7. AUTHOR(S)		8. PERFORMING ORGANIZATION REPORT NO.
9. PERFORMING ORGANIZATION NAME AND ADDRESS Office of Air Quality Planning and Standards U.S. Environmental Protection Agency Research Triangle Park, North Carolina 27711		10. PROGRAM ELEMENT NO.
		11. CONTRACT/GRANT NO. 68-02-3059
12. SPONSORING AGENCY NAME AND ADDRESS DAA for Air Quality Planning and Standards Office of Air, Noise, and Radiation U.S. Environmental Protection Agency Research Triangle Park, North Carolina 27711		13. TYPE OF REPORT AND PERIOD COVERED Final
		14. SPONSORING AGENCY CODE EPA/200/04

15. SUPPLEMENTARY NOTES
This report discusses the proposed new source performance standards and the resulting environmental and economic impacts.

16. ABSTRACT

Standards of Performance for the control of emissions from the asphalt roofing manufacturing industry are being proposed under Section 111 of the Clean Air Act. These standards would apply only to saturators, blowing stills, storage tanks, and mineral handling and storage operations in asphalt roofing plants, and blowing stills and storage tanks in oil refineries and asphalt processing plants. This document contains background information and environmental and economic impact assessments of the regulatory alternatives considered in developing proposed standards.

17. KEY WORDS AND DOCUMENT ANALYSIS

a. DESCRIPTORS	b. IDENTIFIERS/OPEN ENDED TERMS	c. COSATI Field/Group
Air Pollution Pollution Control Standards of Performance Asphalt Roofing Manufacturing New Source Performance Standards Particulates	Air Pollution Control	13b

18. DISTRIBUTION STATEMENT Unlimited	19. SECURITY CLASS *(This Report)* Unclassified	21. NO. OF PAGES 398
	20. SECURITY CLASS *(This page)* Unclassified	22. PRICE

EPA Form 2220-1 (Rev. 4-77) PREVIOUS EDITION IS OBSOLETE

United States
Environmental Protection
Agency

Office of Air, Noise, and Radiation
Office of Air Quality Planning and Standards
Research Triangle Park NC 27711

Publication No. EPA-450/3-80-021a

Official Business
Penalty for Private Use
$300

Postage and
Fees Paid
Environmental
Protection
Agency
EPA 335

If your address is incorrect, please change on the above label; tear off; and return to the above address.
If you do not desire to continue receiving this technical report series, CHECK HERE ☐ ; tear off label; and return it to the above address.