Note: This is a reference cited in *AP 42, Compilation of Air Pollutant Emission Factors, Volume I Stationary Point and Area Sources.* AP42 is located on the EPA web site at www.epa.gov/ttn/chief/ap42/

The file name refers to the reference number, the AP42 chapter and section. The file name "ref02_c01s02.pdf" would mean the reference is from AP42 chapter 1 section 2. The reference may be from a previous version of the section and no longer cited. The primary source should always be checked.

RAMCON ENVIRONMENTAL CORPORATION

RAMCON BUILDING 223 SCOTT STREET MEMPHIS, TENNESSEE 38112 TELEPHONE 901 / 458-7000 800 / 458-4567

RECEIVED

SEP 15 1986

AIR MANAGEMENT
ADMINISTRATION

SOURCE SAMPLING
for
PARTICULATE EMISSIONS
BITUMINOUS CONSTRUCTION, INC.
CROFTON, MARYLAND
July 31 & August 1, 1986

John Sherwood
Bituminous Construction, Inc.

G. Sumner Buck, III
President

Sam T. Turner
Field Supervisor

TABLE OF CONTENTS

I.	INTRODUCTION	1
II.	TEST RESULTS	1
III.	TEST PROCEDURES	2
IV.	THE SOURCE	4
V.	EQUIPMENT USED	10
VI.	LABORATORY PROCEDURES & RESULTS	11
VII.	CALCULATIONS	18
VIII.	FIELD DATA	32
IX.	CALIBRATIONS	38
X.	RAMCON PERSONNEL	45

I. INTRODUCTION

On July 31 and August 1, 1986, personnel from RAMCON Environmental Corporation (REC) conducted a source emissions test for particulate, SO_2 & SO_3 emissions compliance at Bituminous Construction, Inc.'s Astec drum mix asphalt plant located in Crofton, Maryland. RAMCON personnel conducting the test were Ken Allmendinger, Team Leader and Shawn Greenwood. Kim Rea was responsible for the final laboratory analysis including taring the beakers and filters and recording final data in the laboratory record books. Custody of the samples was limited to Mr. Allmendinger and Ms. Rea.

The purpose of the test was to determine if the rate of particulate, SO_2 and SO_3 emissions from the plant's scrubber and the total contaminants by weight (grain loading) are below the N.S.P.S. limits set by EPA and set by the State of Maryland.

II. TEST RESULTS

Table I summarizes the test results. The grain loading limitation for EPA is specified in 39 FR 9314, March 8, 1974, 60.92 Standards for Particulate Matter (1), as amended. The allowable emissions for the State of Maryland are specified in C.O.M.A.R. 101806.03.

Mr. Craig Holdefer of Maryland's Office of Environmental Affairs observed the testing conducted by RAMCON.

TABLE I

SUMMARY OF TEST RESULTS
July 31 & August 1, 1986

Test Run	Grain Loading	Actual Emissions	SO_2 Emissions	SO_3 Emissions
.0348 1	0.03 gr/dscf	8.4 lbs/hr	0.060 ppm	0.0 mg/m^3
.0341 2	0.03 gr/dscf	7.5 lbs/hr	0.120 ppm	0.0 mg/m^3
.0337 3	0.03 gr/dscf	7.7 lbs/hr	0.060 ppm	0.0 mg/m3
.0342 Ave.	0.03 gr/dscf	7.9 lbs/hr	0.080 ppm	0.0 mg/m^3

On the basis of these test results, the average grain loading of the three test runs was below the .04 gr/dscf emissions limitation set by US EPA and meets the .03 gr/dscf emissions limitation set by the State of Maryland. The plant is also below the 35 mg/m^3 SO_3 emissions limitation and the 500 ppm SO_2 emissions limitation set by State of Maryland. Therefore, the plant is operating in compliance with State and Federal Standards for particulates and is in compliance with State Standards for SO_2 and SO_3.

III. TEST PROCEDURES

A. Method Used: The source sampling was conducted in accordance with requirements of the U.S. Environmental Protection Agency as set forth in 39 FR 9314, March 8, 1974, 60.93, as amended.

B. Problems Encountered: The filter from test run three was inadvertently contaminated and the final weight cannot be reported. The test results of runs one and two have been reported accurately.

C. Sampling Site: The emissions test was conducted after a scrubber on a round stack with a diameter of 57". The sampling ports were placed 30" down (0.5 diameters upstream) from the top of the stack and 120" up (2.1 diameters downstream) from the last flow disturbance. Twenty four points were sampled, twelve through each traverse for two minutes each.

Points on a Diameter	Probe Mark
1	*7.2"
2	9.8"
3	12.7"
4	16.1"
5	20.3"
6	26.2"
7	42.8"
8	48.8"
9	52.9"
10	56.3"
11	59.2"
12	61.8"

* Measurements include a 6" standoff.

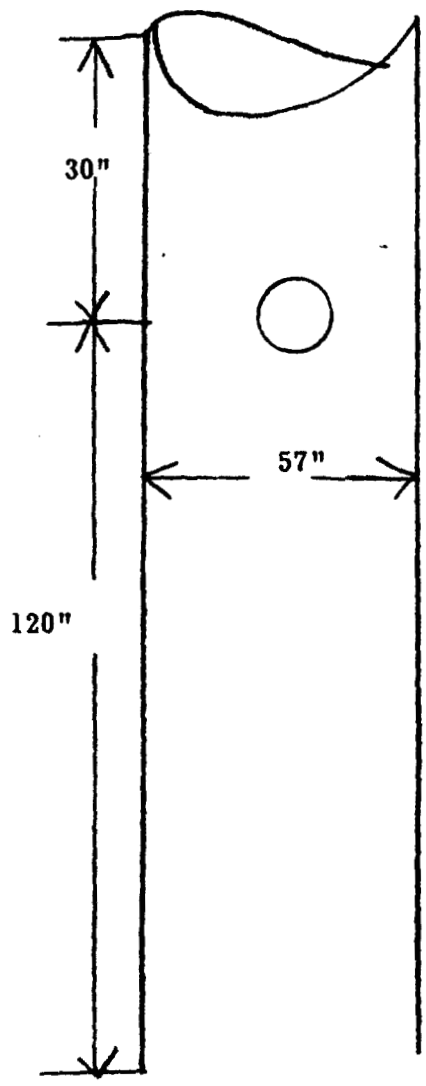

IV. THE SOURCE

IV. THE SOURCE

Bituminous Construction, Inc. employs an Astec drum mix asphalt plant which is used to manufacture hot mix asphalt for road pavement. The process consists of blending prescribed portions of cold feed materials (sand, gravel, screenings, chips, etc.) uniformly and adding sufficient hot asphalt oil to bind the mixture together. After the hot asphalt mix is manufactured at the plant, it is transported to the location where it is to be applied. The hot asphalt mix is spread evenly over the surface with a paver and then compacted with a heavy roller to produce the final product.

The following is a general description of the plant's manufacturing process: The cold feed materials (aggregate) are dumped into four separate bins which in turn feed a common continuous conveyor. The aggregate is dispensed from the bins in accordance with the desired formulation onto the cold feed system conveyor to an inclined weigh conveyor then to a rotating drum for continuous mixing and drying at approximately 300°F. The required amount of hot asphalt oil is then injected onto and mixed into the dried aggregate. The now newly formed hot asphalt mix is pulled to the top of a storage silo by conveyor. The hot asphalt mix is then discharged from the storage silo through a slide gate into waiting dump trucks, which transport the material to a final destination for spreading. The rated capacity of the plant will vary with each aggregate mix and moisture content with a 5% surface moisture removal.

The drum mixer uses a burner fired with coal and natural gas to heat air to dry the aggregate, and the motion of the rotating drum to blend the aggregate and hot asphalt oil thoroughly. The air is drawn into the system via an exhaust fan. After passing through the burner and the mixing drum, the air passes through a high efficiency scrubber. The scrubber is manufactured by Astec. The exhaust gasses are drawn through the scrubber and discharged to the atmosphere through the stack. The design pressure drop across the venturi is in excess of 8 inches of water. The particulate matter, which is removed by the scrubber is fed into the scrubber pond where it drops out of suspension.

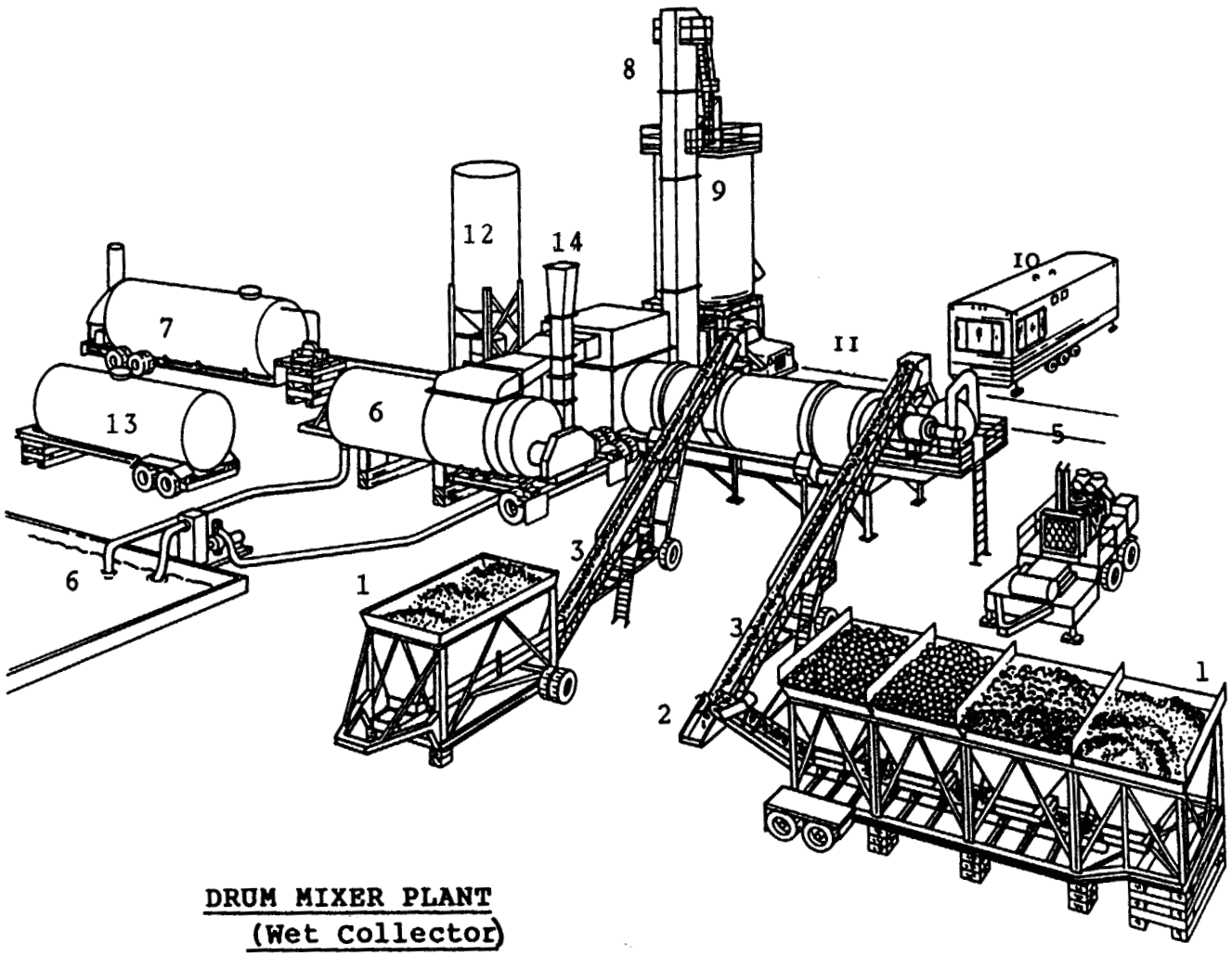

DRUM MIXER PLANT
(Wet Collector)

1. Aggregate bins: Virgin and recycled aggregate is fed individually into each of the bins by type. It is metered onto a conveyor belt running under the bins to a shaker screen. The proportion of each aggregate type is determined by the job mix formula and pre-set to be metered out to meet these specifications.

2. Preliminary oversize screen: The aggregate is fed through a shaker screen where oversize rocks and foreign material is screened out of the mix.

3. Weigh conveyor belt: The aggregate is conveyed to the rotary drum dryer on a conveyor belt which weighs the material. The production rate is determined by this weight reading.

4. Rotary drum dryer/mixer: The aggregate is fed into the rotary drum dryer where it is tumbled by flighting into a veil in front of a gas flame which drives off the moisture. Further mixing is also accomplished in this drum. Hot liquid asphalt is injected approximately one-third of the way down the inclined drum where it is mixed with the aggregate.

5. Burner: The fuel fired burner is used to dry the rough aggregate and sand in the rotating drum as well as reheat recycled asphalt when it is part of the mix.

6. Wet scrubbing system: A system of cyclonic action, spray nozzles and a venturi removes 99% of particulates in the gas stream.

7. Liquid asphalt storage: The liquid asphalt is stored in this heated tank until it is needed in the mixer. The amount of asphalt content and its temperature are pre-set for each different type job.

8. Conveyor to surge/storage bin: The finished product of aggregate mixed with liquid asphalt is conveyed to a surge bin.

9. Surge/storage bin: The asphaltic cement is dumped into this surge bin and metered out to dump trucks which pull underneath the slide gate at the bottom of the bin.

10. Control/operators house: The entire plant operation is controlled from this operator's house.

11. Truck loading scale: As the trucks receive the asphalt from the storage/surge bin they are weighed on the loading scale which tells the plant operator the amount of asphalt that is being trucked on each individual load.

12. Mineral filler system (when used).

13. Burner fuel storage (when used).

14. Stack.

DATA SUMMARY

Plant

1. Manufacturer of plant Astec.
2. Designed maximum operating capacity 600 TPH @ 1 % moisture.
3. Actual operation rate 290 TPH @ 4.5 % moisture.
4. Startup date 3/1/77.
5. Type of fuel used in dryer Gas, Oil, Coal.
6. Quanity of fuel consumption _____.

Aggregate

7. Name/type of mix BI.
8. Percent asphalt in mix 5.2% %.
9. Temperature of asphalt 300°.
10. Sieve/Screening analysis: % Passing;

1"	97%	3/8"	85%	#16	58%
3/4"	93%	#4	77%	#50	11%
1/2"	89%	#8	68%	#200	.4

Scrubber Control System

11. Manufacturer Astec.
12. Type; Venturi ✓; Wet Washer _____;
    Spray Booth _____; Other _____.
13. Water line pressure _____ psi.
14. Pressure drop across system 16" psi.
15. Gallons per minute through system 250.
16. Water source Pond (i.e., lagoon, pond, etc.)
17. Number of spray nozzles 2.

COMPANY NAME Bituminous Const. Inc.

COMPANY REPRESENTATIVE John Sherwood

DATE 8/1/86

PLANT DATA

COMPANY NAME Bituminous Construction Inc.
COMPANY REP. John Sherwood DATE 8/1/86 PHONE # 301-551-9393
DATA SOURCE
PLANT LOCATION Crofton Plant
PLANT MFG. Astec PLANT MODEL # 76-024 PLANT TYPE Drum
MIX SPECIFICATION # BT OIL SPECIFICATION # 30% Gas 70% Coal

Time 24 Hour	Fuel Oil / Nat. Gas ✓ / Propane / Coal ✓ 30% 70%	Burner Setting	Aggregate TPH	Recycle TPH	Liquid Asphalt TPH	Mix Temp. °F	Venturi / Baghouse Pressure Drop Inches Water
9:35		2	235.75		14.25	290°	
9:50		2½	" "		" "	300°	
10:15		4				290°	16"
10:30		3½				300°	16"
10:45		3				290°	16"
11:00		3				295°	16"
11:15		3¼				290°	16"
11:30		3				300°	16"
11:45		3¼				295°	16"
9:00		3	275		15	290°	16"
9:15		3	275		15	295°	16"
9:30		3	275		15	290°	16"
9:45		3¼	275		15	300°	16"
10:00		3	275		15	295°	16"
10:15		3	275		15	295°	16"
10:30		3	275		15	300°	16"

PLANT DATA

COMPANY NAME Bituminous Construction Inc.
COMPANY REP. John Sherwood DATE 8/1/86 PHONE # 551-9393
DATA SOURCE
PLANT LOCATION Crofton Plant
PLANT MFG. Astec PLANT MODEL # 76-024 PLANT TYPE Drum
MIX SPECIFICATION # BI OIL SPECIFICATION # 30% Gas 70% coal

Time 24 Hour	Fuel Oil / Nat. Gas ✓ / Propane / Coal ✓ 30% 70%	Burner Setting	Aggregate TPH	Recycle TPH	Liquid Asphalt TPH	Mix Temp. °F	Venturi / Baghouse Pressure Drop Inches Water
11:00		3	275		15	295°	16"
11:15		3	275		15	295°	16"
11:30		3	275		15	295°	16"
11:45		3	275		15	290°	16"
12:00		3	275		15	295°	16"
12:15		3	275		15	300°	16"
12:30		3	275		15	295°	16"

V. EQUIPMENT USED

V. EQUIPMENT USED

Equipment used on conducting the particulate emissions test was:

A. The Lear Siegler PM-100 stack sampler with appropriate auxillary equipment and glassware. The train was set up according to the schematic on the nex page.

B. An Airguide Instruments Model 211-B (uncorrected) aneroid barometer was used to check the barometric pressure.

C. Weston dial thermometers are used to check meter temperatures. An Analogic Model 2572 Digital Thermocouple is used for stack temperatures.

D. A Hays 621 Analyzer was used to measure the oxygen, carbon dioxide and carbon monoxide content of the stack gases. For non-combustion sources, A Bacharach Instrument Company Fyrite is used for the gas analysis.

E. Filters are mady by Schleicher and Schuell and are type 1-HV with a porosity of .03 microns.

F. The acetone is reagent grade or ACS grade with a residue of $\leq$ .001.

VI. LABORATORY PROCEDURES & RESULTS

LABORATORY PROCEDURES FOR PARTICULATE SAMPLING

I. Field Preparation

A. FILTERS: Fiberglass 4" sampling filters are prepared as follows:

Filters are removed from their box and numbered on the back side with a felt pen. The numbering system is continuous from job to job. The filters are placed in a dessicator to dry for at least 24 hours. Clean plastic petri dishes, also numbered, top and bottom, are placed in the dessicator with the filters. After dessication, the filters are removed one at a time and weighed on the Sartorius analytical balance, then placed in the correspondingly numbered petri dish. Weights are then recorded in the lab record book. Three filters are used for each complete particulate source emissions test and there should be several extra filters included as spares.

B. SILICA GEL: Silica Gel used for the test is prepared as follows:

Approximately 200 g of silica gel is placed in a wide mouth "Mason" type jar and dried in an oven (175°C for two hours). The open jars are removed and placed in a dessicator until cool (2 hours) and then tightly sealed. The jars are then numbered and weighed on the triple beam balance to the closest tenth of a gram, and this weight is recorded for each sealed jar. The number of silica gel jars used is the same as the number of filters. Silica gel should be indicating type, 6-16 mesh.

II. Post-Testing Lab Analysis

A. FILTERS: The filters are returned to the lab in their sealed glass filter holder which was used in field sampling. In the lab these holders are opened. The filter is placed in its petri dish with the lid off and returned to the dessicator for at least 24 hours. The top half of the filter holder is washed into the corresponding probe wash bottle and the bottom half of the filter holder is washed into the corresponding impinger catch bottle. (See II, C and D). After dessication, the filters are reweighed. The final weight is recorded in the lab record book. The filter pick up weight is calculated and recorded also. This procedure is repeated for all filters used in the field.

Alternately, the test team may opt to oven dry the filters at 220°F for two to three hours, weigh the sample, and use this weight as a final weight.

B. SILICA GEL: The sealed silica gel jars should be reweighed on the triple-beam balance and their weights recorded as shown on previous page.

C. PROBE RINSINGS: In all tests, a probe wash-out analysis will be necessary. These samples are returned in sealed Mason jars and consist of A.R. Acetone with an unknown solid content. Clean 250 ml beakers are used to make this analysis. These should be immaculately washed and rinsed with deionized water, then oven dried at 105°C for about one hour. The beakers should be moved to the dessicator to cool for ninety (90) minutes, then labeled with a pencil and weighed on the Sartorius analytical balance. Any variance from this procedure should be duplicated exactly when reweighing, as this procedure has been found to be quite sensitive. After preparing the necessary number of beakers (one for each probe wash and one blank) the Mason jars should be opened, poured into the beaker, and any material remaining on the jar walls rinsed with an acetone wash bottle into the beaker. The amount of liquid in the beaker should be noted on the analysis form. The acetone rinsings are evaporated on a warming plate. The liquid is kept swirled with an air sweep to prevent "bumping". When the acetone is evaporated the beakers are weighed as in Section II A.

D. IMPINGER CATCH: In some testing cases, the liquid collected in the impingers must be analyzed for solids content. This involves a similar procedure to the probe wash solids determination, except that the liquid is deionized water.

E. ACETONE: Conduct a blank analysis of acetone in the 1 gallon glass container. This acetone will be used in the field for rinsing the probe, nozzle, and top half of the filter holder. Performing such a blank analysis prior to testing will insure that the quality of the acetone to be used will not exceed the .001% residual purity standard.

SPECIAL NOTE

When sampling sources high in moisture content, (such as asphalt plants) the filter paper sometimes sticks to the filter holder. When removing the filter it may tear. In order to maintain control of any small pieces of filter paper which may be easily lost, they are washed with acetone into the probe washing. This makes the filter weight light (sometimes negative) and the probe wash correspondingly heavier. The net weight is the same and no particulate is lost. This laboratory procedure is taught by EPA in the Quality Assurance for Source Emissions Workshop at Research Triangle Park and is approved by EPA.

WEIGHING PROCEDURE - SARTORIUS ANALYTICAL BALANCE

The Sartorius balance is accurate to 0.1 mg and has a maximum capacity of 200 grams. The balance precision (standard deviation) is 0.05 mg. Before weighing an item, the balance should first be zeroed. This step should be taken before every series of weighings. To do this, the balance should have all weight adjustments at "zero" position. The beam arrest lever (on the lower left hand side toward the rear of the balance) is then slowly pressed downward to full release position. The lighted vernier scale on the front of the cabinet should align the "zero" with the mark on the cabinet. If it is not so aligned, the adjustment knob on the right hand side (near the rear of the cabinet) should be turned carefully until the marks align. Now return the beam arrest to horizontal arrest position. The balance is now "zeroed".

To weigh an item, it is first placed on the pan. And the sliding doors are closed to avoid air current disturbance. The weight adjustment knob on the right hand side must be at "zero". The beam arrest is then slowly turned upward. The lighted scale at the front of the cabinet will now indicate the weight of the item in grams. If the scale goes past the divided area, the item then exceeds 100 g weight (about 3-1/2 ounces) and it is necessary to arrest the balance (beam arrest lever) and move the lever for 100 g weight away from you. It is located on the left hand side of the cabinet near the front, and is the knob closest to the side of the cabinet. The balance will not weigh items greater than 200 grams in mass, and trying to do this might harm the balance. Remember -- this is a delicate precision instrument.

After the beam is arrested, in either weight range, the procedure is the same. When the weight of the item in grams is found, "dial in" that amount with the two knobs on the left hand side (near the 100 g lever) color coded yellow and green. As you dial the weight, the digits will appear on the front of the cabinet. When the proper amount is dialed, carefully move the arrest lever down with a slow, steady turn of the wrist. The lighted dial will appear, and the right hand side knob (front of cabinet) is turned to align the mark with the lower of the two lighted scale divisions which the mark appears between. When these marks are aligned, the two lighted digits along with the two indicated on the right hand window on the cabinet front are the fractional weight in grams (the decimal would appear before the lighted digits) and the whole number of grams weight is the amount "dialed in" on the left.

In general, be sure that the beam is in "arrest" position before placing weight on or taking weight off of the pan. Don't "dial in" weight unless the beam is arrested. The balance is sensitive to even a hand on the table near the balance, so be careful and painstaking in every movement while weighing.

LABORATORY PROCEDURES FOR SO_2

Pour the catch from impingers two and three into a 1000 ml volumetric flask. Bring the solution in the flask up to the required 1000 ml volume by mixing it with deionized distilled water, then mix thoroughly. Pipette a 10 ml aliquot of sample into a 250 ml Erlenmeyer flask. Add 40 ml of isopropanol, 2 to 4 drops of thorin indicator and titrate to a pink endpoint using 0.0100 N barium perchlorate. Repeat the titration with a second aliquot of sample and average the titration values. Replicate titrations must agree within 1 percent or 0.2 ml, whichever is greater.

Prepare the blanks by adding 2 to 4 drops of thorin indicator to 100 ml of 80 percent isopropanol. Titrate the blanks in the same manner as the samples.

LABORATORY PROCEDURES FOR H_2SO_4

Pour the contents of the first impinger into a 250 ml graduated cylinder and bring the volume up to 250 ml with 80% isopropanol. Transfer the contents to a storage container and add the filter. Shake the container to coat the isopropanol solution on the filter. If the filter tears, allow the fragments to settle before taking a sample. Pipette a 25 ml aliquot (100 ml aliquot is too large for these particular samples because of the strength of the solution) of this solution into a 250 ml Erlenmeyer flask, add 2 to 4 drops of thorin indicator and titrate to a pink endpoint using 0.0100 N barium perchlorate. Repeat the titration with a second aliquot and average the titration values.

Form REC#8

SAMPLE ANALYTICAL DATA FORM

Plant Location BCI

Relative humidity in lab 49 %

Sample Location Asphalt Plant

Density of Acetone (pa) .7853 mg/ml

Blank volume (V_a) 200 ml

Date/Time wt. blank 8-4-86 Gross wt. 98.0407 mg

Date/Time wt. blank 8-5-86 Gross wt. 98.0406 mg

Ave. Gross wt. 98.0407 mg

Tare wt. 98.0404 mg

Weight of blank (m_{ab}) .0003 mg

Acetone blank residue concentration (C_a) $(C_a) = (M_{ab}) / (V_a)(p_a) =$ (.000001 mg/g)

Weight of residue in acetone wash: $W_a = C_a V_{aw} p_a =$ (.000001)(200)(.7853) = (.0003)

			Run # 1	Run # 2	Run # 3
Acetone rinse volume (V_{aw})		ml	200	200	200
Date/Time of wt 8-4-86	Gross wt	g	96.4040	94.8663	100.5493
Date/Time of wt 8-5-86	Gross wt	g	96.4040	94.8660	100.5492
	Average Gross wt	g	96.4040	94.8662	100.5493
	Tare wt	g	96.3270	94.8018	100.4819
	Less acetone blank wt (W_a)	g	.0003	.0003	.0003
Wt of particulate in acetone rinse (m_a)		g	.0767	.0641	.0671

	Filter Numbers	#	GC-1617	GC-1622	GC-1621
Date/Time of wt 8-4-86	Gross wt	g	.5712	.5770	.5791
Date/Time of wt 8-5-86	Gross wt	g	.5711	.5768	.5788
	Average Gross wt	g	.5712	.5769	.5790
	Tare wt	g	.5188	.5220	.5002

Weight of particulate on filters(s) (m_f)	g	.0524	.0549	.0562
Weight of particulate in acetone rinse	g	.0767	.0641	.0671
Total weight of particulate (m_n)	g	.1291	.1190	.1233

Note: In no case should a blank residue greater than 0.01 mg/g (or 0.001% of the blank weight) be subtracted from the sample weight.

Remarks

Signature of analyst Ken Rea Signature of reviewer S Thoda

Form REC#8

SAMPLE ANALYTICAL DATA FORM

Plant Location BCI

Relative humidity in lab 49 %

Sample Location Asphalt Plant

Density of Acetone (pa) .7853 mg/ml

Blank volume (V_a) 200 ml

Date/Time wt. blank 8-4-86 Gross wt. 98.0407 mg

Date/Time wt. blank 8-5-86 Gross wt. 98.0406 mg

Ave. Gross wt. 98.0407 mg

Tare wt. 98.0404 mg

Weight of blank (m_{ab}) .0003 mg

Acetone blank residue concentration (C_a) (C_a) = (M_{ab}) / (V_a) (p_a) = (.0000015 mg/g)

Weight of residue in acetone wash: $W_a = C_a V_{aw} p_a$ = (.0000015)(200)(.7853) = (.0003)

		Run # 1	Run # 2	Run # 3
Acetone rinse volume (V_{aw})	ml	200	200	200
Date/Time of wt 8-4-86 Gross wt	g	96.4040	94.8663	100.5493
Date/Time of wt 8-5-86 Gross wt	g	96.4040	94.8660	100.5492
Average Gross wt	g	96.4040	94.8662	100.5493
Tare wt	g	96.3270	94.8018	100.4819
Less acetone blank wt (W_a)	g	.0003	.0003	.0003
Wt of particulate in acetone rinse (m_a)	g	.0767	.0641	.0671

Filter Numbers	#	GC-1617	GC-1622	GC-1621
Date/Time of wt 8-4-86 Gross wt	g	.5712	.5770	.5791
Date/Time of wt 8-5-86 Gross wt	g	.5711	.5768	.5788
Average Gross wt	g	.5712	.5769	.5790
Tare wt	g	.5188	.5220	.5227

Weight of particulate on filters(s) (m_f)	g	.0524	.0549	.0562
Weight of particulate in acetone rinse	g	.0767	.0641	.0671
Total weight of particulate (m_n)	g	.1291	.1190	.1233

Note: In no case should a blank residue greater than 0.01 mg/g (or 0.001% of the blank weight) be subtracted from the sample weight.

Remarks

Signature of analyst Ken Rea Signature of reviewer S Turk

SO_3 & H_2SO_4 ANALYSIS
(Method 8)

Plant BCF Date August 21, 1986

Audit Samples

Audit Number								
	A	B	A	B	A	B	A	B
V_{soln} (ml)								
V_a (ml)								
N (N)								
V_t (ml)								
$V_{m(std)}$ (dscm)								
C_{SO_2} (mg/dscm)								

K_2 = 32.03 mg/meq

SO_3 & H_2SO_4 Analysis for Impinger ~~2 & 3 Combined.~~ 1

Run Number	1		2		3		Blank	
	A	B	A	B	A	B	A	B
V_{soln} (ml)	270	270	365	365	364	364		
V_a (ml)	100	100	100	100	100	100		
N (N)	0.0100	0.0100	0.0100	0.0100	0.0100	00100		
V_t (ml)	0	0	0	0	0	0	0	0
$V_{m(std)}$ (dscf)								
C_{SO_2} (lb/dscf)								

K_3 = 7.061×10^{-5} lb/meq

Analysis performed by: John R. Biggs Approved by: [illegible]

SO_2 ANALYSIS
(Method 8)

Plant BCI Date August 27, 1986

Audit Samples

Audit Number								
	A	B	A	B	A	B	A	B
V_{soln} (ml)								
V_a (ml)								
N (N)								
V_t (ml)								
$V_{m(std)}$ (dscm)								
C_{SO_2} (mg/dscm)								

K_2 = 32.03 mg/meq

SO_2 Analysis for Impinger 2 & 3 Combined.

Run Number	1		2		3		Blank	
	A	B	A	B	A	B	A	B
V_{soln} (ml)	1000	1000	1000	1000	1000	1000		
V_a (ml)	10.	10	10	10	10	10		
N (N)	0.0100	0.0100	0.0100	0.0100	0.0100	0.0100	~~0~~	
V_t (ml)	0.3	0.3	0.4	0.4	0.3	0.3	0	0
$V_{m(std)}$ (dscf)								
C_{SO_2} (lb/dscf)								

K_3 = 7.061×10^{-5} lb/meq

Analysis performed by: Carlo R Biggs Approved by: S Peot

VII. CALCULATIONS

NAME: B.C.I.

LOCATION: CROFTON, MARYLAND

		date	7/31/86	8/01/86	8/01/86
	SUMMARY OF TEST DATA		RUN # 1	RUN # 2	RUN # 3
	SAMPLING TRAIN DATA	start	10:16	09:59	11:01
		finish	11:46	10:20	12:17
1	Sampling time, minutes	θ	72	72	72
2	Sampling nozzle diameter, in.	Dn	.300	.300	.300
3	Sampling nozzle cross-sectional area, ft^2	An	.000491	.000491	.000491
4	Isokinetic variation	I	99	102	102
5	Sample gas volume - meter conditions, cf.	Vm	58.74	54.51	58.38
6	Average meter temperature, °R	Tm	567	561	573
7	Average oriface pressure drop, in.H_2O	ΔH	2.29	1.95	2.23
8	Total particulate collected mg.	Mn	129.1	119.0	123.3
	VELOCITY TRAVERSE DATA				
9	Stack area, ft^2	A	17.2	17.2	17.2
10	Absolute stack gas pressure, in. Hg.	Ps	30.94	31.02	31.02
11	Barometric pressure, in. Hg.	Pbar	30.94	31.02	31.02
12	Average absolute stack temperature, °R	Ts	641	638	640
13	Average $\sqrt{\text{velocity head}}$, (Cp= .83)	$\sqrt{\Delta P}$	.69	.64	.67
14	Average stack gas velocity ft. / sec.	Vs	43	40	42
	STACK MOISTURE CONTENT				
15	Total water collected by train, ml.	Vic	433.0	454.0	465.0
16	Moisture in stack gas, %	Bws	26.3	28.4	28.0
	EMISSIONS DATA:				
17	Stack gas flow rate, dscf/hr. (000's)	Qsd	1,684	1,530	1,607
18	Total particulate concentration, gr/dscf	Cs	.0348	.0341	.0337
19	Total particulate emissions lbs/hr	E	8.4	7.5	7.7
20	Total SO concentration, lbs/dscf	C'	.000000	.000001	.000000
21	Total SO_2 emissions lbs/hr	E'	.62	.81	.61
	ORSAT DATA				
22	Percent CO2 by volume	CO2	6.0	6.0	6.0
23	Percent O2 by volume	O2	9.0	9.0	9.0
24	Percent CO by volume	CO	.0	.0	.0
25	Percent N2 by volume	N2	85.0	85.0	85.0

Dry Gas Volume :

$$V_{m(std)} = V_m \left[\frac{T_{(std)}}{T_m} \right] \left[\frac{P_{bar} + \frac{\Delta H}{13.6}}{P_{(std)}} \right] = 17.64 \frac{^\circ R}{in.Hg.} \; Y \; V_m \left[\frac{P_{bar} + \frac{\Delta H}{13.6}}{T_m} \right]$$

Where:

$V_{m(std)}$	=	Dry Gas Volume through meter at standard conditions, cu.ft.
V_m	=	Dry Gas Volume measured by meter, cu.ft.
P_{bar}	=	Barometric pressure at oriface meter, in. Hg.
P_{std}	=	Standard absolute pressure,(29.92 in. Hg.)
T_m	=	Absolute temperature at meter $^\circ R$
T_{std}	=	Standard absolute temperature (528°R)
ΔH	=	Average pressure drop across oriface meter,in.H_2O
Y	=	Dry gas meter calibration factor
13.6	=	Inches water per inches Hg.

Run # 1 $$V_{m(std)} = 17.64 \quad (1.01)(58.74) \left[\frac{(30.94) + \frac{2.29}{13.6}}{567} \right] = 57.16 \text{ dscf}$$

Run # 2 $$V_{m(std)} = 17.64 \quad (1.01)(54.51) \left[\frac{(31.02) + \frac{1.95}{13.6}}{561} \right] = 53.71 \text{ dscf}$$

Run # 3 $$V_{m(std)} = 17.64 \quad (1.01)(58.38) \left[\frac{(31.02) + \frac{2.23}{13.6}}{573} \right] = 56.36 \text{ dscf}$$

Total contaminants by weight: 'GRAIN LOADING'

Particulate concentration C_s' gr./dscf.

$$C_s' = \left[0.0154 \frac{gr}{mg} \right] \left[\frac{M_n}{V_{m(std)}} \right]$$

Where:

C_s' = Concentration of particulate matter in stack gas, dry basis, corrected to standard conditions, gr./dscf.

M_n = Total amount of particulate matter collected, mg.

$V_{m(std)}$ = Dry gas volume through meter at standard conditions, cu.ft.

Run # 1: $$C_s' = \left[0.0154 \frac{gr}{mg} \right] \left[\frac{129.1}{57.16} \right] = .0348 \text{ gr./dscf.}$$

Run # 2: $$C_s' = \left[0.0154 \frac{gr}{mg} \right] \left[\frac{119.0}{53.71} \right] = .0341 \text{ gr./dscf.}$$

Run # 3: $$C_s' = \left[0.0154 \frac{gr}{mg} \right] \left[\frac{123.3}{56.36} \right] = .0337 \text{ gr./dscf.}$$

Dry molecular weight:

$$M_d = 0.44(\%CO_2) + 0.32(\%O_2) + 0.28(\%CO + \%N_2).$$

Where:

M_d	= Dry molecular weight, lb./lb.-mole.
$\%CO_2$	= Percent carbon dioxide by volume (dry basis).
$\%O_2$	= Percent oxygen by volume (dry basis).
$\%N_2$	= Percent nitrogen by volume (dry basis).
%CO	= Percent carbon monoxide by volume (dry basis).
0.264	= Ratio of O_2 to N_2 in air, v/v.
0.28	= Molecular weight of N_2 or CO, divided by 100.
0.32	= Molecular weight of O_2 divided by 100.
0.44	= Molecular weight of CO_2 divided by 100.

Run # 1: $M_d = 0.44(\ 6.0\%\ ) + 0.32(\ 9.0\%\ ) + 0.28(\ \ .0\% + 85.0\%\ ) =$ 29.3 lb./lb.-mole

Run # 2: $M_d = 0.44(\ 6.0\%\ ) + 0.32(\ 9.0\%\ ) + 0.28(\ \ .0\% + 85.0\%\ ) =$ 29.3 lb./lb.-mole

Run # 3: $M_d = 0.44(\ 6.0\%\ ) + 0.32(\ 9.0\%\ ) + 0.28(\ \ .0\% + 85.0\%\ ) =$ 29.3 lb./lb.-mole

Water vapor condensed :

$$V_{wc_{std}} = \left[V_f - V_i \right] \left[\frac{\rho_w \; R \; T_{(std)}}{M_w \quad P_{(std)}} \right] = 0.04707 \left[V_f - V_i \right]$$

$$V_{wsg_{std}} = \left[W_f - W_i \right] \left[\frac{R \quad T_{(std)}}{M_w \quad P_{(std)}} \right] = 0.04715 \left[W_f - W_i \right]$$

Where:

0.04707 = Conversion factor $ft.^3/ml.$

0.04715 = Conversion factor $ft.^3/g.$

$V_{wc_{std}}$ = Volume of water vapor condensed (standard conditions) scf.

$V_{wsg_{std}}$ = Volume of water vapor collected in silica gel (standard conditions)

V_f = Final volume of impinger contents, ml.

V_i = Initial volume of impinger contents

ρ = Density of water, (0.002201 lb/ml).

R = Ideal gas constant, 21.85 (in.Hg.)(cu.ft./lb.-mole)(°R)

M_w = Molecular weight of water vapor (18.0 lb/lb-mole).

T_{std} = Absolute temperature at standard conditions, 528°R.

P_{std} = Absolute pressure at standard conditions, 29.92 inches Hg.

Run # 1: $V_{wc(std)}$ = (0.04707) (425.0) = 20.0 cu.ft
$V_{wsg(std)}$ = (0.04715) (8.0) = .4 cu.ft

Run # 2: $V_{wc(std)}$ = (0.04707) (445.0) = 20.9 cu.ft
$V_{wsg(std)}$ = (0.04715) (9.0) = .4 cu.ft

Run # 3: $V_{wc(std)}$ = (0.04707) (459.0) = 21.6 cu.ft
$V_{wsg(std)}$ = (0.04715) (6.0) = .3 cu.ft

Moisture content of stack gases: $$B_{ws} = \frac{V_{wc_{std}} + V_{wsg_{std}}}{V_{wc_{std}} + V_{wsg_{std}} + V_{m_{std}}} \times 100$$

Where:

B_{ws} = Proportion of water vapor, by volume, in the gas stream.

V_m = Dry gas volume measured by dry gas meter,(dcf).

$V_{wc_{std}}$ = Volume of water vapor condensed corrected to standard conditions (scf).

$V_{wsg_{std}}$ = Volume of water vapor collected in silica gel corrected to standard conditions (scf).

Run # 1: $$B_{ws} = \frac{20.0 + .4}{20.0 + .4 + 57.16} \times 100 = 26.3\ \%$$

Run # 2: $$B_{ws} = \frac{20.9 + .4}{20.9 + .4 + 53.71} \times 100 = 28.4\ \%$$

Run # 3: $$B_{ws} = \frac{21.6 + .3}{21.6 + .3 + 56.36} \times 100 = 28.0\ \%$$

Molecular weight of stack gases: $M_s = M_d\ (1-B_{ws}) + 18\ (B_{ws})$.

Where:

M_s = Molecular weight of stack gas, wet basis, (lb./lb.-mole).

M_d = Molecular weight of stack gas, dry basis, (lb./lb.-mole).

Run # 1: $M_s = 29.3\ (1- .263\ ) + 18\ (\ .263\ ) = 26.3$ (lb./lb.-mole).

Run # 2: $M_s = 29.3\ (1- .284\ ) + 18\ (\ .284\ ) = 26.1$ (lb./lb.-mole).

Run # 3: $M_s = 29.3\ (1- .280\ ) + 18\ (\ .280\ ) = 26.1$ (lb./lb.-mole).

Stack gas velocity:

$$V_s = K_p \, C_p \left[\sqrt{\Delta P} \right] \text{avg.} \sqrt{\frac{T_{s(avg.)}}{P_s \; M_s}}$$

Where:

V_s = Average velocity of gas stream in stack, ft./sec.

K_p = 85.49 ft/sec $\left[(g/g\text{-mole})\text{-}(mm\ Hg) \ / \ (^\circ K)(\ mm\ H_2O) \right]^{1/2}$

C_p = Pitot tube coefficient,(dimensionless).

ΔP = Velocity head of stack gas, in. H_2O.

P_{bar} = Barometric pressure at measurement site, (in.Hg).

P_g = Stack static pressure (in.Hg).

P_s = Absolute stack gas pressure, (in.Hg) = $P_{bar} + P_g$

P_{std} = Standard absolute pressure, (29.92 in.Hg).

t_s = Stack temperature, ($^\circ$f).

T_s = Absolute stack temperature, ($^\circ$R). = 460 + t_s.

M_s = Molecular weight of stack gas, wet basis, (lb/lb-mole).

Run # 1: $V = (85.49)\ (\ .83)\ (\ .69) \sqrt{\dfrac{641}{(30.94)(26.33)}} = 43.32$ ft/sec

Run # 2: $V = (85.49)\ (\ .83)\ (\ .64) \sqrt{\dfrac{638}{(31.02)(26.09)}} = 40.22$ ft/sec

Run # 3: $V = (85.49)\ (\ .83)\ (\ .67) \sqrt{\dfrac{640}{(31.02)(26.14)}} = 42.13$ ft/sec

Stack gas flow rate:

$$Q_{sd} = 3600 \left[1-B_{wc} \right] V_s \, A \left[\frac{T_{std}}{T_{stk}} \right] \left[\frac{P_s}{P_{std}} \right]$$

Where:

Q_{sd} = Dry volumetric stack gas flow rate corrected to standard conditions, (dscf/hr).

A = Cross sectional area of stack (ft.)^2.

3600 = Conversion factor, sec./hr.

t_s = Stack temperature (°f).

T_s = Absolute stack temperature, (°R).

T_{std} = Standard absolute temperature, (528°R).

P_{bar} = Barometric pressure at measurement site, (in.Hg.).

P_g = Stack static pressure, (in.Hg.).

P_s = Absolute stack gas pressure, (in.Hg.); = $P_{bar} + P_g$

P_{std} = Standard absolute pressure, (29.92 in.Hg.)

Run # 1:

$$Q_{sd} = 3600\ (1-.263)\ (43.32)\ (17.2) \left[\frac{528}{641} \right] \left[\frac{30.94}{29.92} \right] = 1683920 \text{ dscf/h}$$

Run # 2:

$$Q_{sd} = 3600\ (1-.284)\ (40.22)\ (17.2) \left[\frac{528}{638} \right] \left[\frac{31.02}{29.92} \right] = 1529958 \text{ dscf/h}$$

Run # 3:

$$Q_{sd} = 3600\ (1-.280)\ (42.13)\ (17.2) \left[\frac{528}{640} \right] \left[\frac{31.02}{29.92} \right] = 1606531 \text{ dscf/h}$$

Emissions rate from stack:

$$E = \frac{(C_s)(Q_{sd})}{7000 \text{ gr./lb.}} = \text{lb. / hr.}$$

Where:

E = Emissions rate, lb./hr.

C = Concentration of particulate matter in stack gas, dry basis, corrected to standard conditions (gr/dscf).

Q = Dry volumetric stack gas flow rate corrected to standard conditions, (dscf/hr).

Run # 1: $E = \frac{(.0348)(1683920)}{7000} = 8.4$ lb. / hr.

Run # 2: $E = \frac{(.0341)(1529958)}{7000} = 7.5$ lb. / hr.

Run # 3: $E = \frac{(.0337)(1606531)}{7000} = 7.7$ lb. / hr.

Isokinetic variation : $I = 100\ T_s \left[\dfrac{0.002669\ V_{ic} + (V_m/T_m)(P_{bar} + \Delta H/13.6)}{60\ \ \theta\ \ V_s\ \ P_s\ \ A_n} \right]$

Where:

I	=	Percent isokinetic sampling.
100	=	Conversion to percent.
T_s	=	Absolute average stack gas temperature, °R.
0.002669	=	Conversion factor, Hg - ft^3/ml - °R.
V_{ic}	=	Total volume of liquid collected in impingers and silica gel, m
T_m	=	Absolute average dry gas meter temperature, °R.
P_{bar}	=	Barometric pressure at sampling site, (in.Hg).
ΔH	=	Average pressure differential across the oriface meter, (in.H_2O
13.6	=	Specific gravity of mercury.
60	=	Conversion seconds to minutes
θ	=	Total sampling time, minutes.
V_s	=	Stack gas velocity, ft./sec.
P_s	=	Absolute stack gas pressure, in.Hg.
A_n	=	Cross sectional area of nozzle, ft^2.

Run # 1:

$$I = 100 \times 641 \left[\frac{(0.002669)(433.0) + \dfrac{58.7}{567}\left[30.94 + \dfrac{2.29}{13.6}\right]}{60\ (\ 72\ )\ (\ 43.32\ )\ (30.94\ )\ (\ .000491\ )} \right] = 99\ \%$$

Run # 2:

$$I = 100 \times 638 \left[\frac{(0.002669)(454.0) + \dfrac{54.5}{561}\left[31.02 + \dfrac{1.95}{13.6}\right]}{60\ (\ 72\ )\ (\ 40.22\ )\ (31.02\ )\ (\ .000491\ )} \right] = 102\ \%$$

Run # 3:

$$I = 100 \times 640 \left[\frac{(0.002669)(465.0) + \dfrac{58.4}{573}\left[31.02 + \dfrac{2.23}{13.6}\right]}{60\ (\ 72\ )\ (\ 42.13\ )\ (31.02\ )\ (\ .000491\ )} \right] = 102\ \%$$

Sulfuric Acid Concentration (Including SO_3) Impinger 1

$$CH_2SO_4 = \frac{K_2N\ (V_t - V_{tb})(V_{soln})}{V_{m(std)}\ V_a}$$

Where; H_2SO_4 = Sulfuric acid concentration (including SO_3), (g/dscm)

K_2 = 1.081×10^{-4} lbs/meq

N = Normality of barium perchlorate titrant, g equivalents/liter

V_t = Volume of barium perchlorate titrant used for the sample, ml.

V_{tb} = Volume of barium perchlorate titrant used for the blank, ml.

V_{soln} = Total volume of solution in which the sulfuric acid sample is contained.

$V_{m(std)}$ = Volume of gas sample measured by the dry gas meter corrected to standard conditions, dscf.

V_a = Volume of sample aliquot titrated (100 ml for H_2SO_4).

Run #1: $$CH_2SO_4 = .04904 \frac{\left[.0100\ (0.0 - .00)\ \frac{(270)}{100}\right]}{(1.6186\ m^3)} = .00\ g/dscm \text{ or } 0.0\ mg/m^3$$

Run #2: $$CH_2SO_4 = .04904 \frac{\left[.0100\ (0.0 - .00)\ \frac{(365)}{100}\right]}{(1.5209\ m^3)} = .00\ g/dscm \text{ or } 0.0\ mg/m^3$$

Run #3: $$CH_2SO_4 = .04904 \frac{\left[.0100\ (0.0 - .00)\ \frac{(364)}{100}\right]}{(1.5959\ m^3)} = .00\ g/dscm \text{ or } 0.0\ mg/m^3$$

Sulfur Dioxide Concentration

$$CSO_2 = \frac{K_3 N (V_t - V_{tb}) \left(\frac{V_{soln}}{V_a}\right)}{V_{m(std)}}$$

Where; CSO_2 = Sulfur dioxide concentration, (lbs/dscf)

K_3 = 7.061×10^{-5} Lb/meq

N = Normality of barium perchlorate titrant, g equivalents/liter

V_t = Volume of barium perchlorate titrant used for the sample, ml.

V_{tb} = Volume of barium perchlorate titrant used for the blank, ml.

V_{soln} = Total volume of solution in which the sulfuric acid or sulfur dioxide sample is contained, 250 ml or 1,000 ml respectively

$V_{m(std)}$ = Volume of gas sample measured by the dry gas meter corrected to standard conditions, dscf.

V_a = Volume of sample aliquot titrated (10 ml for SO_2)

Run # 1: $CSO_2 = 7.061 \times 10^{-5} \left[\frac{.0100000 \, (.30 - .00) \, \left(\frac{1000}{10}\right)}{(57.160)} \right] = .0000003700$ lbs./dscf

Run # 2: $CSO_2 = 7.061 \times 10^{-5} \left[\frac{.0100000 \, (.40 - .00) \, \left(\frac{1000}{10}\right)}{(53.710)} \right] = .0000005300$ lbs./dscf

Run # 3: $CSO_2 = 7.061 \times 10^{-5} \left[\frac{.0100000 \, (.30 - .00) \, \left(\frac{1000}{10}\right)}{(56.360)} \right] = .0000003800$ lbs./dscf

Sulfur Dioxide Emissions

$$E = CSO_2 \times Q_{sd}$$

Where; E = Emissions of sulfur dioxide in pounds per hour

Q_{sd}= Stack gas flow rate (dscf/hr)

CSO_2= Sulfur dioxide concentration (lbs/dscf)

Run # 1: E = (.000000370 lbs/dscf) (1683920 dscf/hr) = .62 lbs/hr

Run # 2: E = (.000000530 lbs/dscf) (1529958 dscf/hr) = .81 lbs/hr

Run # 3: E = (.000000380 lbs/dscf) (1606531 dscf/hr) = .61 lbs/hr

Emissions of SO_2 PPM (Parts Per Million)

$$E = CSO_2 \left| \frac{453.593g}{1\ lb} \right| \frac{MOL\ SO_2}{64g\ SO_2} \left| \frac{22.4\ l}{MOL} \right| \frac{293^\circ K}{273^\circ K} \left| \frac{ft^3}{28.317\ l} \right| 1,000,000$$

Where;

CSO_2	=	Concentration of SO_2 in lbs/dscf
453.593	=	Conversion to grams
MOL SO_2	=	Molar conversion for SO_2
22.4 l/MOL	=	Volumetric molar conversion @ 273°K
293°K/273°K	=	Temperature correction to std conditions
28.317 l	=	Conversion of liters to cubic feet
1,000,000	=	Conversion to parts per million

Run # 1:

$$E = \frac{.0000000100\ lbs}{dscf} \left| \frac{453.593g}{1\ lb} \right| \frac{MOL\ SO_2}{64g\ SO_2} \left| \frac{22.4\ l}{MOL} \right| \frac{293^\circ K}{273^\circ K} \left| \frac{ft^3}{28.317\ l} \right| 1,000,000 \Bigg| =$$

.060 ppm

Run # 2:

$$E = \frac{.0000000200\ lbs}{dscf} \left| \frac{453.593g}{1\ lb} \right| \frac{MOL\ SO_2}{64g\ SO_2} \left| \frac{22.4\ l}{MOL} \right| \frac{293^\circ K}{273^\circ K} \left| \frac{ft^3}{28.317\ l} \right| 1,000,000 \Bigg| =$$

.120 ppm

Run # 3:

$$E = \frac{.0000000100\ lbs}{dscf} \left| \frac{453.593g}{1\ lb} \right| \frac{MOL\ SO_2}{64g\ SO_2} \left| \frac{22.4\ l}{MOL} \right| \frac{293^\circ K}{273^\circ K} \left| \frac{ft^3}{28.317\ l} \right| 1,000,000 \Bigg| =$$

.060 ppm

VIII. FIELD DATA

RAMCON ENVIRONMENTAL CORPORATION

Plant B.C.I.

Location Clifton Md.
Operator K. Allmendinger
Date 1-31-86
Run No. 1
Sample Box No. 1
Meter Box No. 685836
Meter H @ 1.71
C Factor 1.0055
Pitot Tube Coefficient Cp .828

Pp = 4.16

Ambient Temperature 90
Barometric Pressure 30.94
Assumed Moisture, % 25
Probe Length, m(ft) 6'
Nozzle Identification No. .0004909
Avg. Calibrated Nozzle Dia., (in.) .300/.300/.300
Probe Heater Setting 3.5
Leak Rate, m^3/min. (cfm) +.004
Probe Liner Material 316 stainless
Static Pressure, mm Hg (in. Hg) .05
Filter No. GC-1617

	IMPINGER VOLUME, ml	SILICA GEL WEIGHT, g
FINAL	725	509
INITIAL	300	501
DIFFERENCE	425	8

Schematic of Stack Cross Section

TRAV. PT NO.	SAMPLING TIME (θ) min.	VACUUM in. Hg	STACK TEMP (T_s) °F	VELOCITY HEAD (P_s) in H_2O	PRESSURE DIFF. ORF. MTR in H_2O	GAS SAMPLE VOLUME ft^3	GAS SAMPLE TEMP. AT DRY GAS METER °F Inlet	Outlet	FILTER HOLDER TEMP °F	GAS TEMP LVG CONDENSER OR LAST IMPINGER °F
A) 1	10:15 / 10:19	4	150	.35	1.6	141.471 / 143.57	90	85	265	60
2	10:21	3	160	.30	1.3	145.53	100	85	260	60
3	10:24	2	172	.14	.62	146.93	105	85	255	60
4	10:27	0	175	.05	.22	147.81	110	90	250	60
5	10:30	0	180	.05	.22	148.64	110	90	245	60
6	10:33	7	180	.69	3.0	151.17	115	90	240	60
7	10:36	9	180	.90	4.0	154.46	115	90	250	60
8	10:39	9	180	.90	4.0	157.81	115	90	255	60
9	10:41	9	180	.85	.38	161.10	115	90	260	60
10	10:44	9	180	.80	3.7	164.38	120	95	265	60
11	10:47	8	185	.75	.33	167.39	120	95	260	60
12	10:50:15	7	180	.70	3.0	170.367	125	95	250	60
B) 1	11:10 / 11:13	5	170	.44	2.0	172.63	105	100	260	60

CO_2 = 6.0
O_2 = 9.0

Form #REC-05

RAMCON emissions test log sheet, cont. DATE 7-31-86 LOCATION BC1 TEST NO. 1

TRAVERSE POINT	SAMPLING TIME θ (min)	VACUUM mm Hg (in. Hg)	STACK TEMP T_s (°F)	VELOCITY HEAD ΔP_s (in. H_2O)	ORFICE DIFF. PRESSURE ΔH (in. H_2O)	GAS VOLUME Vm ($ft.^3$)	GAS SAMPLE TEMP. (°F) in	GAS SAMPLE TEMP. (°F) out	SAMPLE BOX TEMP. (°F)	IMPINGER TEMP (°F)
2	11:16	5	180	.44	2.0	174.99	120	100	265	60
3	11:19	5	185	.44	2.0	177.39	125	100	260	60
4	11:22	5	185	.38	1.7	179.66	125	100	255	60
5	11:25	4	190	.30	1.3	181.69	125	100	250	60
6	11:28	4	190	.25	1.1	183.57	125	100	245	60
7	11:31	5	190	.44	2.0	185.95	125	100	240	60
8	11:34	6	185	.55	2.5	188.63	130	100	245	60
9	11:37	7	190	.59	2.6	191.42	130	100	250	60
10	11:40	7	190	.62	2.8	194.28	130	100	255	60
11	11:43	8	190	.70	3.1	197.24	130	100	260	60
12	11:46	8	190	.70	3.1	200.207	130	100	265	60

RAMCON ENVIRONMENTAL CORPORATION

Plant BCI

PP = 4.46

Location Clifton Md.
Operator K. Allmendinger
Date 8-1-86
Run No. 2
Sample Box No. 2
Meter Box No. 685836
Meter H @ 1.71
C Factor 1.0055
Pitot Tube Coefficient Cp .828

Ambient Temperature 80
Barometric Pressure 31.02
Assumed Moisture, % 25
Probe Length, m(ft) 6'
Nozzle Identification No. .0004908
Avg. Calibrated Nozzle Dia., (in.) .300/.300/.300
Probe Heater Setting 3.5
Leak Rate, m^3/min. (cfm) +.012
Probe Liner Material 316 stainless
Static Pressure, mm Hg (in. Hg) .05
Filter No. GC-1622

	IMPINGER VOLUME, ml	SILICA GEL WEIGHT, g
FINAL	745	514
INITIAL	300	505
DIFFERENCE	445	9

Schematic of Stack Cross Section

TRAV. PT NO.	SAMPLING TIME (θ) min.	VACUUM in. Hg	STACK TEMP (T_s) °F	VELOCITY HEAD (P_s) in H_2O	PRESSURE DIFF. ORF. MTR in H_2O	GAS SAMPLE VOLUME ft^3	GAS SAMPLE TEMP. AT DRY GAS METER °F Inlet	Outlet	FILTER HOLDER TEMP °F	GAS TEMP LVG CONDENSER OR LAST IMPINGER °F
A) 1	8:59:10 / 9:02	3	140	.29	1.3	200.476 / 202.33	85	80	230	60
2	9:05	3	160	.29	1.3	204.18	95	80	240	60
3	9:08	3	170	.16	.71	205.66	100	80	250	60
4	9:11	2	170	.05	.22	206.49	100	80	260	60
5	9:14	2	175	.05	.22	207.29	100	80	255	60
6	9:17	3	180	.34	1.5	209.27	105	85	250	60
7	9:20	3	175	.34	1.5	211.33	100	85	245	60
8	9:23	3	180	.34	1.5	213.40	100	85	240	60
9	9:26	3	180	.36	1.6	215.69	105	85	240	60
10	9:29	4	180	.49	2.2	218.25	105	90	245	60
11	9:32	5	180	.73	3.3	221.30	115	90	250	60
12	9:35:10	6	180	.78	3.5	224.474	120	90	255	60
B) 1	9:44 / 9:47	4	155	.56	2.5	227.10	100	95	260	60

(12)

Form #REC-05

RAMCON emissions test log sheet, cont. DATE 8-1-86 LOCATION 151 TEST NO. 2

TRAVERSE POINT	SAMPLING TIME θ (min)	VACUUM mm Hg (in. Hg)	STACK TEMP T_s (°F)	VELOCITY HEAD ΔP_s (in. H_2O)	ORFICE DIFF. PRESSURE ΔH (in. H_2O)	GAS VOLUME V_m ($ft.^3$)	GAS SAMPLE TEMP. (°F) in	GAS SAMPLE TEMP. (°F) out	SAMPLE BOX TEMP. (°F)	IMPINGER TEMP (°F)
2	9:50	6	185	.66	2.9	229.92	115	95	265	60
3	9:53	6	185	.55	2.5	232.64	120	95	270	60
4	9:56	5	185	.43	1.9	235.04	120	95	260	60
5	9:59	4	185	.35	1.6	237.21	125	95	255	60
6	10:02	2	185	.15	.67	238.71	120	95	250	60
7	10:05	4	185	.30	1.3	240.64	120	95	245	60
8	10:08	5	185	.48	2.1	243.05	125	95	240	60
9	10:11	6	185	.56	2.5	245.76	125	95	245	60
10	10:14	7	185	.67	3.0	248.65	125	95	250	60
11	10:17	8	185	.80	3.5	251.81	125	100	255	60
12	10:20	8	185	.80	3.5	254.984	125	100	250	60

(25)

RAMCON ENVIRONMENTAL CORPORATION

Plant: BCI

Location: Clifton Md.
Operator: S. Greenwood
Date: 8/11/86
Run No.: 3
Sample Box No.: 3
Meter Box No.: 689836
Meter H @: 1.71
C Factor: 1.0055
Pitot Tube Coefficient Cp: .838

M = 4.46

Ambient Temperature: 86°
Barometric Pressure: 31.02
Assumed Moisture, %: 25
Probe Length, m(ft): 6 ft
Nozzle Identification No.: 000909
Avg. Calibrated Nozzle Dia., (in.): .300 .300 .300
Probe Heater Setting: 3.5
Leak Rate, m^3/min. (cfm): +0.015
Probe Liner Material: 316 Stainless
Static Pressure, mm Hg (in. Hg): .05
Filter No.: GC-162

	IMPINGER VOLUME, ml	SILICA GEL WEIGHT, g
FINAL	759	513
INITIAL	300	507
DIFFERENCE	459	6

Schematic of Stack Cross Section

TRAV. PT NO.	SAMPLING TIME (θ) min.	VACUUM in. Hg	STACK TEMP (T_s) °F	VELOCITY HEAD (P_s) in H_2O	PRESSURE DIFF. ORF. MTR in H_2O	GAS SAMPLE VOLUME ft^3	GAS SAMPLE TEMP. AT DRY GAS METER °F Inlet	Outlet	FILTER HOLDER TEMP °F	GAS TEMP LVG CONDENSER OR LAST IMPINGER °F
A) 1	11:01 / 11:04	4	145	.35	1.6	255.10 / 257.19	110	100	240	55
2	11:07	4	165	.31	1.4	259.38	120	100	245	55
3	11:10	3	170	.20	0.89	261.20	120	100	255	55
4	11:13	2	170	.06	0.27	262.08	120	100	255	55
5	11:16	2	175	.04	0.18	263.02	120	100	260	55
6	11:19	7	180	.73	3.2	265.47	125	100	260	55
7	11:22	7	185	.77	3.4	268.51	125	100	260	60
8	11:25	7	185	.71	3.2	271.65	125	100	260	60
9	11:28	8	185	.83	3.7	275.01	120	100	265	60
10	11:31	8	180	.80	3.5	278.07	120	100	265	60
11	11:34	7	180	.77	3.4	281.11	120	100	270	60
12	11:37	7	185	.75	3.3	284.47	125	100	270	60
B) 1	11:41 / 11:44	6	150	.55	2.4	287.23	115	100	250	50

Form #REC-05

RAMCON emissions test log sheet, cont. DATE 8/1/86 LOCATION Clifton, Ind TEST NO. 3

TRAVERSE POINT	SAMPLING TIME θ (min)	VACUUM mm Hg (in. Hg)	STACK TEMP T_s (°F)	VELOCITY HEAD ΔP_s (in. H_2O)	ORFICE DIFF. PRESSURE ΔH (in. H_2O)	GAS VOLUME Vm ($ft.^3$)	GAS SAMPLE TEMP. (°F) in	GAS SAMPLE TEMP. (°F) out	SAMPLE BOX TEMP. (°F)	IMPINGER TEMP (°F)
2	11:47	7	185	.54	2.4	289.88	125	100	250	50
3	11:50	7	185	.48	2.1	292.25	130	100	255	50
4	11:53	6	185	.37	1.7	294.77	130	100	255	50
5	11:56	7	190	.51	2.3	297.28	130	100	260	55
6	11:59	4	190	.31	1.4	299.12	130	100	260	55
7	12:02	2	190	.10	0.45	300.51	130	100	265	55
8	12:05	3	190	.19	0.85	302.00	130	100	265	55
9	12:08	6	190	.51	2.3	304.57	130	100	265	55
10	12:11	7	190	.57	2.6	307.24	130	105	265	60
11	12:14	8	190	.75	3.3	310.30	130	105	270	60
12	12:17	8	190	.81	3.6	313.485	130	105	270	60

IX. CALIBRATIONS

METER BOX CALIBRATION DATA AND CALCULATION FORM

(English units)

Date 8-4-86 Meter box number 689836

Barometric pressure, P_b = 30.20 in. Hg Calibrated by [illegible]

Orifice manometer setting (ΔH), in. H_2O	Gas volume: Wet test meter (V_w), ft^3	Gas volume: Dry gas meter (V_d), ft^3	Temperature: Wet test meter (t_w), °F	Temperature: Dry gas meter: Inlet (t_{d_i}), °F	Temperature: Dry gas meter: Outlet (t_{d_o}), °F	Temperature: Dry gas meter: Avg[a] (t_d), °F	Time (θ), min	Y_i	$\Delta H@_i$ in. H_2O
0.5	~~10~~ 5	344.68 / 349.876	76	110 / 108	84 / 84	96.5	13:01	.9979	1.8373
1.0	~~10~~ 7.1	334.74 / 344.013	76	110 / 110	82 / 84	96.5	12:36	1.0001	1.7066
1.5	10	325.04 / 336.331	76	100 / 110	78 / 82	97.5	15:52	1.0006	1.7042
2.0	10								
3.0	10								
4.0	10								
							Avg	.9995	1.7494

ΔH, in. H_2O	$\frac{\Delta H}{13.6}$	$Y_i = \frac{V_w P_b (t_d + 460)}{V_d (P_b + \frac{\Delta H}{13.6})(t + 460)}$	$\Delta H@_i = \frac{0.0317\ \Delta H}{P_b (t_d + 460)} \left[\frac{(t_w + 460)\ \theta}{V_w}\right]^2$
0.5	0.0368	$\frac{5 \cdot 30.2 \cdot 556.5}{5.196 \cdot 30.2368 \cdot 536}$ .9979	$\frac{.0317 \cdot .5}{30.2 \cdot 556.5} \left[\frac{536 \cdot 13.02}{5}\right]^2$ 1.8373
1.0	0.0737	$\frac{7.1 \cdot 30.2 \cdot 556.5}{7.353 \cdot 30.2735 \cdot 536}$ 1.0001	$\frac{.0317 \cdot 1.0}{30.2 \cdot 556.5} \left[\frac{536 \cdot 12.6}{7.1}\right]^2$ 1.7066
1.5	0.1105	$\frac{11 \cdot 30.2 \cdot 552.5}{11.291 \cdot 30.3103 \cdot 536}$ 1.0006	$\frac{.0317 \cdot 1.5}{30.2 \cdot 552.5} \left[\frac{536 \cdot 15.87}{11}\right]^2$ 1.7042
2.0	0.147		
3.0	0.221		
4.0	0.294		

[a] If there is only one thermometer on the dry gas meter, record the temperature under t_d.

METER BOX CALIBRATION DATA AND CALCULATION FORM

(English units)

Date 7-28-86 Meter box number 685836

Barometric pressure, P_b = 29.655 in. Hg Calibrated by KH

Orifice manometer setting (ΔH), in. H_2O	Gas volume: Wet test meter (V_w), ft^3	Gas volume: Dry gas meter (V_d), ft^3	Temperature: Wet test meter (t_w), °F	Temperature: Dry gas meter: Inlet (t_{d_i}), °F	Temperature: Dry gas meter: Outlet (t_{d_o}), °F	Temperature: Dry gas meter: Avg[a] (t_d), °F	Time (Θ), min	Y_i	$\Delta H@_i$ in. H_2O
0.5	10	84.99 / 90.182	75	106 / 110	88 / 88	98	12:27	1.0016	1.6998
1.0	10	128.74 / 133.927	76	110 / 112	86 / 88	99	8:52	1.0047	1.7225
1.5	10	116.04 / 126.345	75	112 / 112	86 / 86	99	14:26	1.0102	1.7095
2.0	10								
3.0	10								
4.0	10								
							Avg	1.0055	1.7106

ΔH, in. H_2O	$\frac{\Delta H}{13.6}$	$Y_i = \frac{V_w P_b (t_d + 460)}{V_d (P_b + \frac{\Delta H}{13.6})(t + 460)}$	$\Delta H@_i = \frac{0.0317\ \Delta H}{P_b (t_d + 460)} \left[\frac{(t_w + 460)\ \Theta}{V_w}\right]^2$
0.5	0.0368	$\frac{5 \cdot 29.655 (558)}{5.192 \cdot 29.7286 \cdot 535}$ 1.0016	$\frac{.0317 \cdot .5}{29.655 \cdot 460.558} \left[\frac{535 \cdot 12.45}{5}\right]^2$ 1.6998
1.0	0.0737	$\frac{5 \cdot 29.655 \cdot 559}{5.187 \cdot 29.7285 \cdot 535}$ 1.0047	$\frac{.0317 \cdot 1.0}{29.655\ 559} \left[\frac{535 \cdot 8.87}{5}\right]^2$ 1.7225
1.5	0.110	$\frac{10 \cdot 29.655 \cdot 559}{10.305 \cdot 29.7653 \cdot 535}$ 1.0102	$\frac{.0317 \cdot 1.5}{29.655 \cdot 559} \left[\frac{535 \cdot 14.43}{10}\right]$ 1.7095
2.0	0.147		
3.0	0.221		
4.0	0.294		

[a] If there is only one thermometer on the dry gas meter, record the temperature under t_d.

RAMCON ENVIRONMENTAL CORPORATION

Lear Siegler Stack Sampler

Nozzle Diameter Calibration

Date _____ Signature _____

Nozzle No.	Average Diameter	Nozzle No.	Average Diameter
1		7	
2		8	
3		9	
4		10	
5		11	
6		12	

Pitot Tube Calibration (S Type)

Pitot Tube Identification No. 63 (6ft) Date 5-12-86

Calibrated by: C. Mitchell

"A" SIDE CALIBRATION

Run No.	Δp std cm H_2O (in. H_2O)	Δp (s) cm H_2O (in. H_2O)	$C_p(s)$	DEVIATION $C_p(s)-\bar{C}_p(A)$
1	0.77	1.10	0.837	-0.001
2	0.90	1.30	0.832	0.004
3	1.00	1.50	0.816	-0.012
		$\bar{C}_p$ (SIDE A)	0.828	

"B" SIDE CALIBRATION

Run No.	Δp std cm H_2O (in. H_2O)	Δp(s) cm H_2O in. H_2O)	$C_p(s)$	DEVIATION $C_p(s)-\bar{C}_p(B)$
1	0.77	1.10	0.837	-0.001
2	0.90	1.30	0.832	0.004
3	1.00	1.50	0.816	-0.012
		$\bar{C}_p$ (SIDE B)	0.828	

$$\text{AVERAGE DEVIATION} = \sigma(\text{A OR B}) = \frac{\sum_{1}^{3} |C_p(s)-\bar{C}_p(\text{A OR B})|}{3} \leftarrow \text{MUST BE} \leq 0.01$$

$$|\bar{C}_p(\text{SIDE A})-\bar{C}_p(\text{SIDE B})| \leftarrow \text{MUST BE} \leq 0.01$$

$$C_p(s) = C_p(std)\sqrt{\frac{\Delta p\ std}{\Delta p_s}}$$

Form No. EED-17-1

STACK TEMPERATURE SENSOR CALIBRATION DATA FORM

Date 5-19-86 Thermocouple number 63

Ambient temperature 23.9 °C Barometric pressure 30.12 in. Hg

Calibrator K.A Reference: mercury-in-glass ✓

other _____

Reference point number	Source[a] (specify)	Reference thermometer temperature, °C	Thermocouple potentiometer temperature, °C	Temperature difference,[b] %
A	ice water	32 °F	32 °F	0.0 %
B	Boiling water	212 °F	212 °F	0.0 %
C	Boiling oil	410.5 °F	409.6 °F	0.3 %
D	Ambient 7-31-86	90 °F	90 °F	0 %

[a]Type of calibration system used.

[b] $\left[\frac{(\text{ref temp, °C} + 273) - (\text{test thermom temp, °C} + 273)}{\text{ref temp, °C} + 273}\right] 100 \leq 1.5\%.$

RAMCON

Lear Siegler Stack Sampler

Heating Probe Calibration

Probe No. 63 Probe Length 6

Date of Calibration 5-19-86 Signature K. B. Allmulligan

Name of Company to be tested _____

Note: 3 ft. probe - 5 min. warmup
6 ft. probe - 15 min. warmup
10 ft. probe - 30 min. warmup
Calibration flow rate = .75 CFM

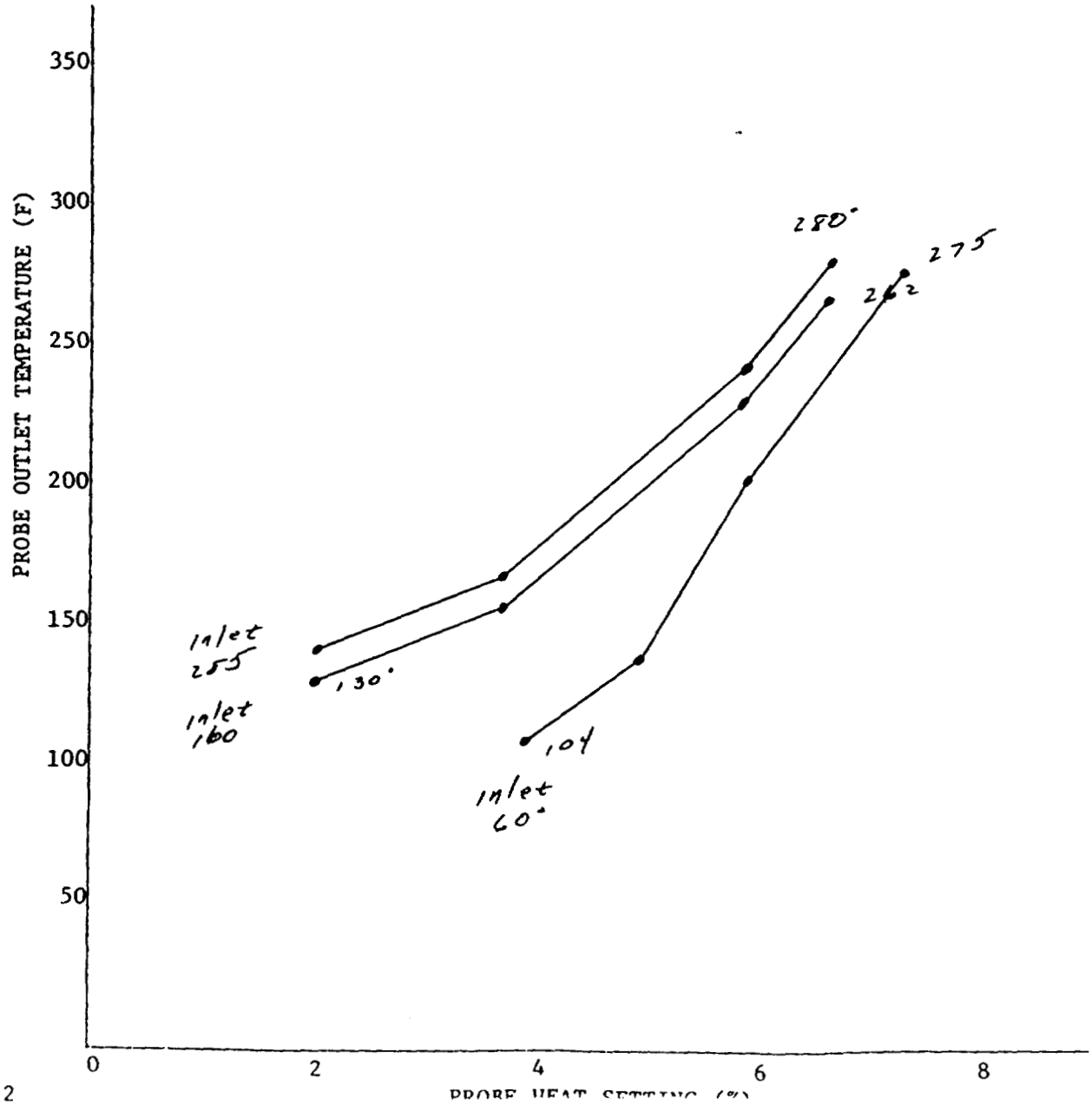

STACK TEMPERATURE SENSOR CALIBRATION DATA FORM

Date 5-19-86 Thermocouple number Hot box

Ambient temperature 23 °C Barometric pressure 30.12 in. Hg

Calibrator [illegible] Reference: mercury-in-glass ✓

other _____

Reference point number	Source[a] (specify)	Reference thermometer temperature, °C	Thermocouple potentiometer temperature, °C	Temperature difference,[b] %
A	Boiling water	100 °C	100 °C	0%
B	Ambient	23 °C	22.8 °C	< 1%
	7-31-86	90 °F	90 °F	0%

[a]Type of calibration system used.

[b] $\left[\frac{(\text{ref temp, °C} + 273) - (\text{test thermom temp, °C} + 273)}{\text{ref temp, °C} + 273}\right] 100 \leq 1.5\%.$

STACK TEMPERATURE SENSOR CALIBRATION DATA FORM

Date 5-19-86 Thermocouple number inlet/outlet

Ambient temperature 23.9 °C Barometric pressure 30.12 in. Hg

Calibrator [illegible] Reference: mercury-in-glass ✓

other _____

Reference point number	Source[a] (specify)	Reference thermometer temperature, °C	Thermocouple potentiometer temperature, °C	Temperature difference,[b] %
A	inlet Ambient	75°F	75°F	0.0%
B	outlet Ambient	75°F	75°F	0.0%
C	Ambient 7-31-86	90°F	90°F	0%

[a]Type of calibration system used.

[b] $\left[\frac{(\text{ref temp, °C} + 273) - (\text{test thermom temp, °C} + 273)}{\text{ref temp, °C} + 273}\right] 100 \leq 1.5\%.$

X. RAMCON PERSONNEL

RAMCON Environmental Stack Test Team

Sumner Buck - President

Sumner Buck is the President of RAMCON Environmental. He is a graduate of the EPA 450 "Source Sampling for Particulate Pollutants" course and the 474 "Continuous Emissions Monitoring" course all given at RTP. Mr. Buck is a qualified V.E. reader with current certification. Mr. Buck has personally sampled over 300 stacks including over 200 asphalt plants. He is 43 years old and a graduate of the University of Mississippi with graduate studies at Memphis State University and State Technical Institute of Memphis.

Ken Allmendinger - Team Leader

Ken Allmendinger has been employed with RAMCON for three years. He has sampled over 100 asphalt plants with extensive training in Methods 1 through 5. He is qualified as a team leader and has current certification as a V.E. reader.