Note: This is a reference cited in *AP 42, Compilation of Air Pollutant Emission Factors, Volume I Stationary Point and Area Sources.* AP42 is located on the EPA web site at www.epa.gov/ttn/chief/ap42/

The file name refers to the reference number, the AP42 chapter and section. The file name "ref02_c01s02.pdf" would mean the reference is from AP42 chapter 1 section 2. The reference may be from a previous version of the section and no longer cited. The primary source should always be checked.

AP42 Section: 11.1

Reference Number: 80

Title: Results Of A Source Emission Compliance Test On An Asphalt Plant Scrubber Operated By Elk River Bituminous, Elk River, Minnesota,

MMT Environmental Services, Inc., St. Paul, MN,

November 10, 1993.

AP-42 Section 11.1
Reference
Report Sect. 4
Reference 80

1909B

MMT Environmental Services, Inc.
4610 North Churchill Street
St. Paul, MN 55126-5892
Phone (612) 483-9595 Fax (612) 483-2699

RESULTS OF A SOURCE EMISSION COMPLIANCE TEST ON AN ASPHALT PLANT SCRUBBER OPERATED BY ELK RIVER BITUMINOUS ELK RIVER, MINNESOTA

September 28, 1993

Submitted to:

Elk River Bituminous
P.O. Box 208
21591 Highway 169
Elk River, MN 55330
Attn: Mr. Jerry Hicks

Prepared by:

Ted Gibbons
Sampling Team Leader

Approved by:

Alan L. Trowbridge
Director of Technical Services

MMT Report Number: 10022
MMT Project Number: 9448
Report Issued: November 10, 1993

TABLE OF CONTENTS

1 INTRODUCTION 1

2 TEST RESULTS 1

3 PROCESS DATA 3

4 TEST PROCEDURES 4
- 4.1 SAMPLING POINTS 4
- 4.2 EFFLUENT VOLUMETRIC FLOW RATE 4
- 4.3 EFFLUENT COMPOSITION AND MOLECULAR WEIGHT 4
- 4.4 EFFLUENT MOISTURE CONTENT 4
- 4.5 EFFLUENT PARTICULATE CONCENTRATION 6
- 4.6 SOURCE PLUME OPACITY 8

5 QUALITY ASSURANCE 9
- 5.1 SAMPLING QUALITY ASSURANCE 9
- 5.2 ANALYTICAL QUALITY CONTROL 9
- 5.3 CALIBRATION GASES 9

APPENDIX A: CALCULATIONS
APPENDIX B: FIELD DATA FORMS
APPENDIX C: LABORATORY REPORTS
APPENDIX D: CALIBRATION DATA
APPENDIX E: PROCESS DATA
APPENDIX F: TEST PLAN & PROTOCOL

RESULTS OF A SOURCE EMISSION COMPLIANCE TEST ON AN ASPHALT PLANT SCRUBBER OPERATED BY ELK RIVER BITUMINOUS, ELK RIVER, MINNESOTA

September 28, 1993

MMT Report Number: 10022
MMT Project Number: 9448
Report Issued: November 10, 1993

1 INTRODUCTION

MMT Environmental Services, Inc. (MMT) was contracted by Elk River Bituminous to perform a source emission compliance test on a single source at their Elk River, Minnesota facility. Testing of the asphalt plant's emissions was required by the Minnesota Pollution Control Agency as part of their permitting requirements. The plant is a Hetherington & Berner model 12260 rated at 75 tons per hour. Emissions generated by the plant's aggregate drum mix operation are controlled by a Efftee model 75 wet scrubber. The scrubber exhaust was tested for particulate and visible emissions on September 28, 1993. This report presents the results of the test program along with all substantiating documentation.

The MMT sampling team consisted of Messrs. Ted Gibbons, Bill Anderson and Alan Trowbridge. Messrs. Jerry Hicks and Bill McKeown represented Elk River Bituminous throughout the test period. Ms. Annette Elliot of the Minnesota Pollution Control Agency witnessed portions of the test proceedings.

2 TEST RESULTS

The results of the particulate emission test are presented in Table 2.1. The data indicates an average effluent particulate concentration of 0.172 grains per dry standard cubic foot and an average source particulate emission rate of 20.53 pounds per hour.

The asphalt plant source emissions are regulated by Minnesota Rule 7005.2010. In order to be in compliance with this rule, the effluent particulate concentration must be less than 0.30 grains per dry standard cubic foot **and** the particulate emissions must also satisfy at least one of the following:

1) Particulate concentration less than 0.082 grains per dry standard cubic foot;
   Based on Minnesota Rule 7005.0520 and a volumetric flow rate of 13,887 dscfm.
2) Particulate mass emission rate less than 33.28 pounds per hour;
   Based on Minnesota Rule 7005.0510 and a process weight rate of 60.0 tons per hour.

The scrubber emissions, as tested, were in compliance with this standard.

The visible emission test was performed concurrent with the particulate test run #2. The observed plume opacity ranged from zero (0) to twenty (20) percent with an overall average of 2.9 percent. Minnesota Rule 7005.2010 states that the asphalt concrete plant shall not discharge into the atmosphere any gases which exhibit greater than 20 percent opacity, except that a maximum of 40 percent opacity shall be permissible for not more than four minutes within any 30-minute period and a maximum of 60 percent opacity shall be permissible for not more than four minutes in any 60-minute period. The scrubber emissions, as tested, were in compliance with this standard.

Test run #1 was aborted due to a build up of moisture in the pitot tube lines. A fourth run was added to the test program to makeup for loss of run #1. During runs 2, 3 and 4, compressed air was periodically used to clear the pitot lines of any moisture buildup. There were no other problems encountered during sample acquisition or analysis. Based on a review of the entire test proceedings, it is MMT's opinion that the test results accurately represent the source emissions under the conditions tested and that they can be used to determine the compliance status of the source.

Table 2.1
Summary of Particulate Emission Test Results
Elk River Bituminous, Elk River, Minnesota
Asphalt Plant Scrubber Exhaust
September 28, 1993

Parameter	Run #2	Run #3	Run #4	Average
Time of Test, hr				
Start	1218	1410	1556	---
Finish	1320	1518	1657	---
Effluent Temperature, °F	128	130	130	129
Effluent Moisture Content, % v/v	14.8	15.1	15.5	15.1
Effluent Composition, % v/v dry:				
Carbon Dioxide Content	2.7	3.0	3.0	2.9
Oxygen Content	17.5	17.0	17.0	17.2
Effluent Volumetric Flow Rate:				
Actual Conditions, acfm	18,301	18,754	19,144	18,733
Standard Conditions, scfm	15,996	16,357	16,725	16,359
Dry Standard Conditions, dscfm	13,631	13,892	14,138	13,887
Sampling Isokinetic Variation, %	99.0	101.9	98.5	99.8
Effluent Particulate Concentration:				
Front Catch, gr/dscf	0.1460	0.1664	0.1907	0.1677
Back Catch, gr/dscf	0.0080	0.0034	0.0025	0.0046
Total Catch, gr/dscf	0.1540	0.1698	0.1932	**0.1723**
Source Particulate Emission Rate:				
Classical Method, lb/hr	18.00	20.23	23.43	20.55
Ratio of Areas Method, lb/hr	17.81	20.61	23.08	20.50
Average of the Two Methods, lb/hr	17.91	20.42	23.26	**20.53**

Standard Conditions: 68°F, 29.92 in. Hg

3 PROCESS DATA

Production data is presented in Appendix E and summarized in Table 3.1.

During the test period the burner on the plant's aggregate/asphalt drum mix operation was fired with waste oil. The results of the fuel analysis (as received basis) are as follows:

Gross Heating value;
- BTU/lb.....18,531
- BTU/gallon.....137,148

Sulfur (S) content, % wt. 0.48
Ash content, % wt..... 0.66
Moisture content, % wt..... 3.80
Lead (Pb) content, µg/g 142
PCB content, µg/g ..... <1.0
Total halogens, ppm..... 330
Acidity, mgKOH/g..... 1.53

Table 3.1
Summary of Process Data
Elk River Bituminous, Elk River, Minnesota
Asphalt Plant and Scrubber
September 28, 1993

Parameter	Run #2	Run #3	Run #4	Average
Time of Test, hr				
Start	1218	1410	1556	---
Finish	1320	1518	1657	---
Process Weight Rate;				
Aggregate Usage, ton/hr	56.42	61.51	51.81	56.58
Asphalt Usage, ton/hr	3.38	3.74	3.13	3.42
Total Process Weight Rate, ton/hr	59.80	65.25	54.94	60.00
Aggregate Moisture Content, %	4.0	4.2	3.7	4.0
Product Mix Temperature, °F	304	301	301	302
Scrubber Pressure Drop, in WC	NR	3.3	3.2	3.3
Scrubber Water Flow, gpm	NR	72	70	71

NR: not recorded

4 TEST PROCEDURES

In order to determine the pollutant emission rate from stationary sources, the Environmental Protection Agency (EPA) has established a series of reference methods which specify the manner in which tests must be performed. These reference methods are found in the Code of Federal Regulations (40 CFR 60) under Title 40 "Protection of the Environment"; Chapter 1 "Environmental Protection Agency"; Subchapter C "Air Programs"; Part 60 "Standards of Performance for New Stationary Sources"; Appendix A "Reference Methods". Unless otherwise noted, the tests presented in this report were performed according to the EPA Reference Methods as revised on July 1, 1992. A brief description of the test procedures used follows.

4.1 SAMPLING POINTS

The number of sampling points and their location with in the source stack/duct was determined per EPA Method 1 which is entitled "Sample and velocity traverses for stationary sources". In this method the number of sampling points is based on the length of straight, undisturbed flow both before and after the sampling port location. Site specific data is presented in Figure 4.1.

A test for cyclonic flow was performed using the S-tube null-reading technique of EPA Method 1, Section 2.4. The test yielded an average yaw angle of 6.4 degrees. This indicates that the sampling location was acceptable as the yaw angle criteria of less than 20 degrees was met.

4.2 EFFLUENT VOLUMETRIC FLOW RATE

The effluent volumetric flow rate was determined per EPA Method 2 which is entitled "Determination of stack gas velocity and volumetric flow rate (Type S pitot tube)". Gas velocity pressure (head) and temperature data were obtained during each EPA Method 5 particulate test run by traversing each of the sampling points defined by EPA Method 1. This data along with gas density (EPA Method 3) and moisture content (EPA Method 4) data was used to calculate the gas velocity at each sampling point. The source volumetric flow rate was calculated by multiplying the average gas velocity by the stack/duct cross-sectional area at the point of measurement.

4.3 EFFLUENT COMPOSITION AND MOLECULAR WEIGHT

The density of the effluent was determined per EPA Method 3 which is entitled "Gas analysis for the determination of dry molecular weight". One sample was collected during each EPA Method 5 particulate test run. The gas samples were analyzed for carbon dioxide and oxygen concentrations with a standard Orsat analyzer using commercially prepared solutions. For calculations of gas density the balance of the gas was assumed to be nitrogen and carbon monoxide.

4.4 EFFLUENT MOISTURE CONTENT

The effluent moisture content was determined per EPA Method 4 which is entitled "Determination of moisture content in stack gases". Data for making the gas moisture content determinations was collected simultaneously with each EPA Method 5 particulate test run. The gas moisture content was calculated from the mass and/or volume of liquid collected in the Method 5 sampling train cold box impingers and the volume of gas sampled.

Figure 4.1 Site Description Form
Elk River Bituminous, Elk River, Minnesota
Asphalt Plant Scrubber Exhaust
September 28, 1993

SAMPLING LOCATION DATA

Stack Cross-Sectional Dimension;	Number of sampling points;
Average diameter, inches 30.0	Required by EPA Method 1 24
	Actually used 24
Length of straight, undisturbed flow;	Number of ports 2
Before ports, inches 65	Number of points per port 12
After ports, inches 135	Particulate test sampling time;
Before ports, stack diameters 2.16	Minutes per point 2.5
After ports, stack diameters 4.50	Minutes per test run 60.0

SAMPLING POINT LOCATION WITHIN STACK CROSS-SECTION

Point Number	Percent of Traverse	Inches from Inside Walls
1	2.1	1.0
2	6.7	2.0
3	11.8	3.5
4	17.7	5.3
5	25.0	7.5
6	35.6	10.7
7	64.4	19.4
8	75.0	22.5
9	82.3	24.7
10	88.2	26.5
11	93.3	28.0
12	97.9	29.0

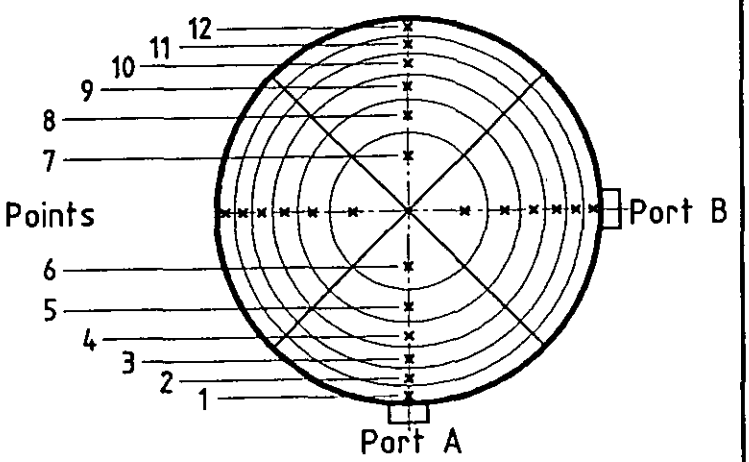

SAMPLING SITE SCHEMATIC

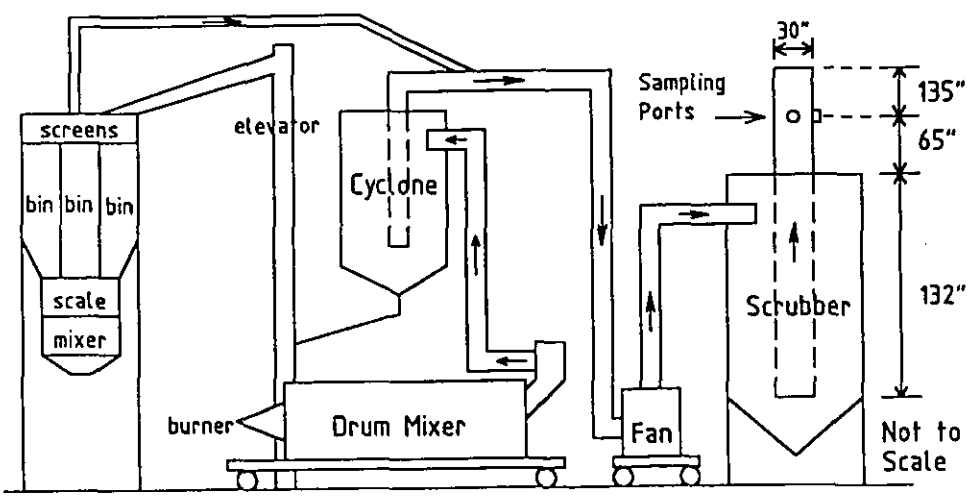

4.5 EFFLUENT PARTICULATE CONCENTRATION

The effluent particulate concentration was determined per EPA Method 5 which is entitled "Determination of particulate emissions from stationary sources". For each test run, particulate matter was isokinetically withdrawn from the gas stream at each of the EPA Method 1 defined sampling points and collected on a glass fiber filter which was maintained at constant temperature (248±25°F). Water vapor, organic vapors and other matter in vapor form which passed through the filter was collected in an ice-cooled impinger trap who's exit temperature was maintained at less than 68°F.

The EPA Method 5 sampling train (Figure 4.2) consists of a heated sampling probe with attached nozzle, thermocouple and S-type pitot tube. The probe attaches to the front sample case (hot box) which houses a glass cyclone (optional) and an all-glass in-line filter holder in a temperature controlled environment. The front sample case is connected to the back sample case (cold box) which houses a series of glass impingers and a desiccant column in an ice bath. The back sample case is connected to the control unit which contains the sample vacuum pump, pressure and temperature indicators and all operating controls.

A representative particulate sample was acquired by sampling for equal periods of time at the center of a number of equal area regions within the stack/duct. At each sampling point the gas velocity head and temperature were measured and the sampling rate rapidly adjusted to isokinetic conditions with the aid of a nomograph or programmable computing device. Sample gas drawn into the nozzle flowed through the probe to the glass fiber filter where the particulate matter was collected. The gases then passed through the ice-cooled condenser (impingers and desiccant column) which quantitatively sorbed all moisture from the gas stream. The gas then passed through the vacuum pump, the dry test meter and the calibrated orifice.

Leak checks to detect any dilution air being pulled into the sampling line were performed at the beginning and end of each test run and also when and if any sample line connections were broken.

After completion of each test run, the sampling train was removed to the clean-up area for sample recovery. The filter was removed from the filter holder and placed in Container #1. Particulate matter collected in the nozzle, probe and all connecting glassware in front of the filter was quantitatively transferred to Container #2 by means of a distilled water wash followed by an acetone wash. A stiff brush was used in the probe cleaning step to help dislodge deposits. The water collected in each of the impingers (desiccant column excluded) was measured and transferred to Container #3. The impingers and all connecting pieces between the filter paper and the desiccant column were then rinsed with distilled water and these rinsings were added to Container #3. The impingers and all connecting pieces between the filter paper and the desiccant column were then rinsed with acetone and these rinsings were placed in Container #4. The desiccant column was then weighed and its contents transferred to a waste desiccant container.

Figure 4.2 Sampling Train Description
Elk River Bituminous, Elk River, Minnesota
Asphalt Plant Scrubber Exhaust
September 28, 1993

PARTICULATE SAMPLING TRAIN IDENTIFICATION

Sampling Train Manufacturer: ..... MMT Environmental Services, Inc.
Sampling Train Model: ..... Universal Stak Sampler

Hot Box Set-up and Operating Temperature;
- Cyclone used: ..... No
- Filter Media: ..... Glass Fiber Filter, Whatman GF/C, 11.0 cm diameter
- Filtration Temperature: ..... 248 ± 25 degrees Fahrenheit

Cold Box Set-up; Impinger Type and Initial Contents
- Impinger #1: ..... Modified Greenburg-Smith design, 100 ml deionized, distilled water
- Impinger #2: ..... Standard Greenburg-Smith design, 100 ml deionized, distilled water
- Impinger #3: ..... Modified Greenburg-Smith design, empty
- Impinger #4: ..... Modified Greenburg-Smith design, ≈ 250 grams silica gel, indicating type

Probe Nozzle Used: ..... MMT #S7, 0.184 inch diameter, stainless steel
Sampling Probe Used: .... MMT #45, 45 inch effective length with stainless steel liner
Pitot Tube Used: ..... MMT #41, S-type, 0.841 coefficient

PARTICULATE SAMPLING TRAIN SCHEMATIC

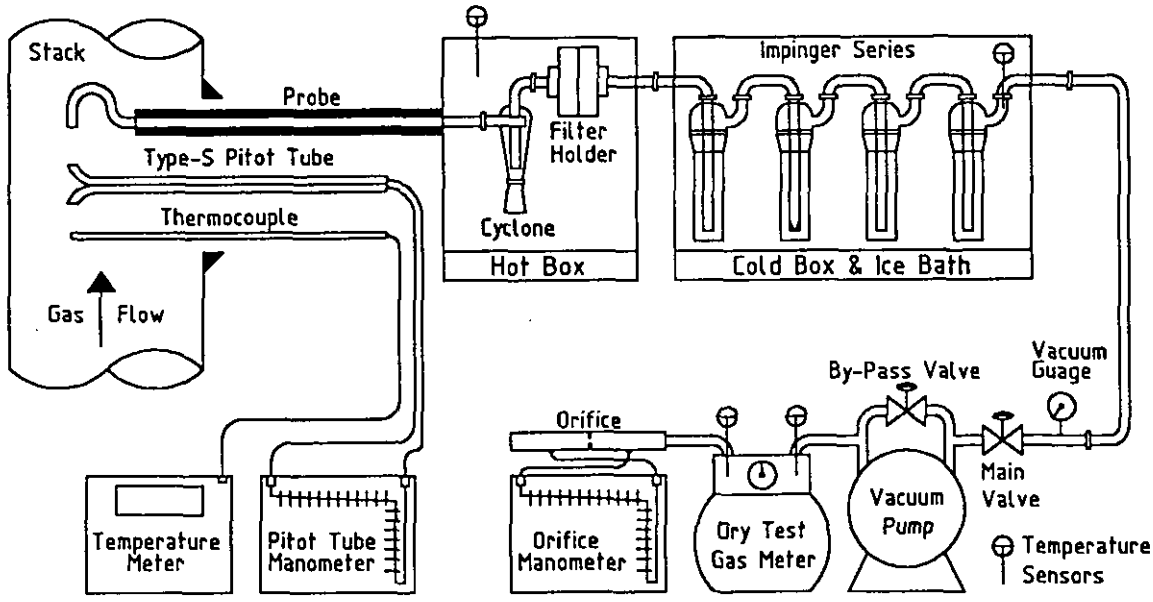

Sample analysis was performed at MMT's laboratory. The filter was dried in a 105°C oven for three hours and then desiccated to constant weight. The contents of Container #2 were transferred to a tared beaker, evaporated to near dryness and then desiccated to a constant weight. The contents of Container #3 were analyzed for condensable organic compounds using the chloroform/ethyl ether extraction procedure described in Minnesota Rule 7005.0500. The collected extract was transferred to a tared beaker, evaporated to near dryness and then desiccated to a constant weight. The contents of Container #4 were also transferred to a tared beaker, evaporated to near dryness and then desiccated to a constant weight.

The mass of particulate matter collected and the volume of gas sampled was used to calculate the effluent particulate concentration. The source particulate mass emission rate was calculated by multiplying the effluent particulate concentration by the source volumetric flow rate. Separate calculations were performed for total catch, front catch only (Containers 1 & 2) and back catch only (Containers 3 & 4).

4.6 SOURCE PLUME OPACITY

The source visible emissions were determined by the visual observations of a certified visible emissions evaluator per EPA Method 9 which is entitled "Visual determination of the opacity of emissions from stationary sources".

In this procedure, the observer positions himself at a distance sufficient to provide a clear view of the emissions with the sun oriented in the 140 degree sector to his back. Consistent with this requirement, the observer's line of site was, as much as possible, perpendicular to the plume's direction.

Opacity observations were made at the point of greatest opacity in that portion of the plume where condensed water vapor was not present. Observations were made at 15-second intervals and recorded to the nearest 5 percent opacity.

5 QUALITY ASSURANCE

The project manager is responsible for implementation of the quality assurance program as applied to any specific project.

5.1 SAMPLING QUALITY ASSURANCE

Source sampling quality assurance procedures are implemented to ensure work is performed:

- by competent, trained individuals experienced on the specific methodologies being used
- using properly calibrated equipment
- using approved procedures for sample handling and documentation

All measuring devices (pitot tubes, dry gas meters, thermocouples, portable gas analyzers, etc.) are uniquely identified and calibrated with documented procedures and acceptance criteria before and after each field effort. Records of all calibration data are maintained in the files. Prior to the test program, MMT provides the following:

- filter numbers and tare weights of all filters available for the test
- results of an acetone residue analysis on the acetone to be used during the test
- calibrations of all pitot tubes, dry gas meters, orifice meters, thermocouples and probes

Specific details of MMT's QA program for stationary air pollution sources may be found in "Quality Assurance Handbook for Air Pollution Measurement Systems", Volume III (EPA-600/4-7-027b).

5.2 ANALYTICAL QUALITY CONTROL

MMT maintains a vigorous quality control program for all sample analyses. This program is based on the general guidelines given in "Handbook for Analytical Quality Control in Water and Waste water Laboratories" (EPA-600/4-79-019); March 1979 . This program suggests guidelines in the areas of:

- Laboratory services
- Glassware
- Solvents
- Analytical performance
- Instrument selection
- Reagents
- Gases
- Laboratory safety

Standards and curves are determined for each analysis using the appropriate standard. Least square linear regression calculations are used in determining "best fit" to the data. Correlation coefficients are also calculated.

5.3 CALIBRATION GASES

MMT uses either EPA Protocol 1 or Acublend Certified Master gases (Scott Specialty Gases) when performing all calibrations in order to ensure tolerances on gas concentrations have been verified and are negligible. Certifications of all calibration gas bottles used during testing are presented in each report.

APPENDIX A: CALCULATIONS

DEFINITION OF UNIT ABBREVIATIONS

ACFM ..... ACTUAL CUBIC FEET PER MINUTE

DEG F ..... DEGREES FAHRENHEIT

DCF ..... DRY CUBIC FEET

DSCF ..... DRY STANDARD CUBIC FEET

DSCFM ..... DRY STANDARD CUBIC FEET PER MINUTE

FPS ..... FEET PER SECOND

G ..... GRAMS

GR/ACF ..... GRAINS PER ACTUAL CUBIC FOOT

GR/DSCF ..... GRAINS PER DRY STANDARD CUBIC FOOT

GR/SCF ..... GRAINS PER STANDARD CUBIC FOOT

IN ..... INCHES

IN HG ..... INCHES OF MERCURY

IN WC ..... INCHES OF WATER

LB/HR ..... POUNDS PER HOUR

LB/LB-MOLE .. POUND PER POUND-MOLE

MIN ..... MINUTES

ML ..... MILLILITERS

SCF ..... STANDARD CUBIC FEET

SCFM ..... STANDARD CUBIC FEET PER MINUTE

SF ..... SQUARE FEET

% V/V DRY ... PERCENT BY VOLUME, DRY BASIS

DEFINITION OF STANDARD CONDITIONS

STANDARD TEMPERATURE ..... 68 DEGREES FAHRENHEIT

STANDARD PRESSURE ..... 29.92 INCHES OF MERCURY

DEFINITION OF VARIABLES

An .... CROSS-SECTIONAL AREA OF NOZZLE, SF
As .... CROSS-SECTIONAL AREA OF STACK, SF
Bwp ... EFFLUENT MOISTURE CONTENT, PERCENT BY VOLUME
Bws ... EFFLUENT MOISTURE CONTENT, PROPORTION BY VOLUME
Ca* ... EFFLUENT PARTICULATE CONCENTRATION AT ACTUAL CONDITIONS, GR/ACF; *=f,b,t; Caf: FRONT CATCH ONLY; Cab: BACK CATCH ONLY; Cat: TOTAL CATCH
CD .... EFFLUENT CARBON DIOXIDE CONCENTRATION, % V/V DRY
CM .... EFFLUENT CARBON MONOXIDE CONCENTRATION, % V/V DRY
Cp .... PITOT TUBE COEFFICIENT, DIMENSIONLESS
Cs* ... EFFLUENT PARTICULATE CONCENTRATION AT DRY STANDARD CONDITIONS, GR/DSCF; *=f,b,t; Csf: FRONT CATCH ONLY; Csb: BACK CATCH ONLY; Cst: TOTAL CATCH
Cw* ... EFFLUENT PARTICULATE CONCENTRATION AT STANDARD CONDITIONS, GR/SCF; *=f,b,t; Cwf: FRONT CATCH ONLY; Cwb: BACK CATCH ONLY; Cwt: TOTAL CATCH
Dn .... NOZZLE DIAMETER, IN
I ..... ISOKINETIC VARIATION, %
Md .... EFFLUENT MOLECULAR WEIGHT, LB/LB-MOLE, DRY BASIS
Ms .... EFFLUENT MOLECULAR WEIGHT, LB/LB-MOLE, WET BASIS
NI .... EFFLUENT NITROGEN CONCENTRATION, % V/V DRY
OX .... EFFLUENT OXYGEN CONCENTRATION, % V/V DRY
Pb .... BAROMETRIC PRESSURE, IN HG
Pg .... STACK STATIC PRESSURE, IN WC
Po .... AVERAGE PRESSURE DROP ACROSS THE METERING ORIFICE, IN WC
Ps .... STACK ABSOLUTE PRESSURE, IN HG
Pv .... AVERAGE SQUARE-ROOT VELOCITY PRESSURE, IN WC
Qa .... EFFLUENT FLOW RATE AT ACTUAL CONDITIONS, ACFM
Qs .... EFFLUENT FLOW RATE AT STANDARD CONDITIONS, SCFM
Qsd ... EFFLUENT FLOW RATE AT STANDARD CONDITIONS, DRY BASIS, DSCFM
Rc* ... SOURCE PARTICULATE EMISSION RATE, CLASSICAL METHOD, LB/HR; *=f,b,t; Rcf: FRONT CATCH ONLY; Rcb: BACK CATCH ONLY; Rct: TOTAL CATCH
Rr* ... SOURCE PARTICULATE EMISSION RATE, RATIO OF AREAS METHOD, LB/HR; *=f,b,t; Rrf: FRONT CATCH ONLY; Rrb: BACK CATCH ONLY; Rrt: TOTAL CATCH
Sl .... STACK DIAMETER OR LENGTH, IN
Sw .... STACK WIDTH, IN
Ti .... TOTAL SAMPLING TIME, MIN
Tm .... AVERAGE DRY GAS METER TEMPERATURE, DEG F
Ts .... AVERAGE EFFLUENT TEMPERATURE, DEG F
Vl .... VOLUME OF LIQUID COLLECTED, ML
Vm .... VOLUME OF GAS SAMPLED AT METER CONDITIONS, DCF
Vms ... VOLUME OF GAS SAMPLED AT STANDARD CONDITIONS, DSCF
Vs .... AVERAGE EFFLUENT VELOCITY, FPS
Vw .... VOLUME OF WATER VAPOR COLLECTED AT STANDARD CONDITIONS, SCF
Wb .... MASS OF PARTICULATE MATTER COLLECTED IN THE BACK (WET) CATCH, G
Wf .... MASS OF PARTICULATE MATTER COLLECTED IN THE FRONT (DRY) CATCH, G
Wt .... TOTAL MASS OF PARTICULATE MATTER COLLECTED, G
Y ..... DRY GAS METER COEFFICIENT, DIMENSIONLESS

EQUATIONS USED TO CALCULATE PARTICULATE EMISSIONS

```
An = 0.005454154 * Dn * Dn

As = 0.005454154 * SI * SI      (FOR ROUND STACKS)

As = SI * Sw / 144.0      (FOR RECTANGULAR STACKS)

Ps = Pb + Pg/13.6

NI = 100.0 - CD - OX - CM

Wt = Wf + Wb

Vms = (528/29.92) * Vm * Y * (Pb + Po/13.6) / (Tm + 460.0)

Vw = 0.04707 * VI

Bws = Vw / (Vw + Vms)

Bwp = 100.0 * Bws

Md = 0.440 * CD  +  0.320 * OX  + 0.280 * (NI + CM)

Ms = Md * (1.0 - Bws)  +  18.0 * Bws

Vs = 85.49 * Cp * Pv * SQRT( (Ts+460.0)/(Ms*Ps) )

Qa = 60.0 * Vs * As

Qs = Qa * (528/29.92) * Ps / (Ts + 460.0)

Qsd = Qs * (1.0 - Bws)

I = 0.09450 * (Ts+460.0) * Vms / (Ps * Vs * An * Ti * (1.0-Bws) )

Csf = 15.42 * Wf / Vws
Csb = 15.42 * Wb / Vws
Cst = 15.42 * Wt / Vws

Cwf = Csf / (1.0 - Bws)
Cwb = Csb / (1.0 - Bws)
Cwt = Cst / (1.0 - Bws)

Caf = Cwf * (29.92/528.0) * (Ts+460.0) / Ps
Cab = Cwb * (29.92/528.0) * (Ts+460.0) / Ps
Cat = Cwt * (29.92/528.0) * (Ts+460.0) / Ps

Rcf = 0.008578 * Csf * Qsd
Rcb = 0.008578 * Csb * Qsd
Rct = 0.008578 * Cst * Qsd

Rrf = 0.008578 * Csf * (Vms/Ti) * (As/An)
Rrb = 0.008578 * Csb * (Vms/Ti) * (As/An)
Rrt = 0.008578 * Cst * (Vms/Ti) * (As/An)
```

TRAVERSE POINT DATA SUMMARY AND VELOCITY PROFILE

PROJECT NUMBER: 9448 COMPANY: ELK RIVER BITUMINOUS
TEST NUMBER: 1 SOURCE: SCRUBBER OUTLET
RUN NUMBER: 2 TIME: 9/28/93 1218-1320

SAMPLING LOCATION PORT	POINT	TRAVERSE POINT DATA: VELOCITY PRESSURE IN WC	ORIFICE PRESSURE IN WC	TEMPERATURE, DEG.F STACK GAS	METER INLET	METER OUTLET	VELOCITY PROFILE: SQRT VELOCITY PRESSURE	GAS VELOCITY FT/SEC
A	1	1.100	0.870	126	48	48	1.049	64.50
A	2	1.100	0.870	125	51	48	1.049	64.45
A	3	1.050	0.830	128	55	48	1.025	63.13
A	4	0.990	0.790	127	58	48	0.995	61.25
A	5	1.050	0.830	128	60	48	1.025	63.13
A	6	0.880	0.690	127	60	48	0.938	57.74
A	7	0.920	0.720	128	61	49	0.959	59.09
A	8	0.920	0.720	127	63	49	0.959	59.04
A	9	0.880	0.690	129	63	49	0.938	57.84
A	10	0.920	0.730	128	64	50	0.959	59.09
A	11	0.890	0.700	129	65	50	0.943	58.17
A	12	0.880	0.690	126	66	50	0.938	57.69
B	1	0.970	0.760	127	60	51	0.985	60.62
B	2	0.960	0.750	129	62	51	0.980	60.41
B	3	0.960	0.750	130	63	51	0.980	60.46
B	4	0.950	0.750	129	64	51	0.975	60.10
B	5	1.100	0.870	131	65	51	1.049	64.78
B	6	1.150	0.900	130	67	52	1.072	66.18
B	7	1.350	1.060	128	68	53	1.162	71.58
B	8	1.200	0.940	130	68	52	1.095	67.60
B	9	1.250	0.980	128	67	52	1.118	68.88
B	10	1.100	0.870	129	67	52	1.049	64.67
B	11	0.970	0.760	130	66	52	0.985	60.78
B	12	0.950	0.750	129	66	53	0.975	60.10
AVERAGE		1.020	0.803	128	62	50	1.008	62.14

PARTICULATE EMISSION TEST CALCULATIONS

PROJECT NUMBER: 9448 COMPANY: ELK RIVER BITUMINOUS
TEST NUMBER: 1 SOURCE: SCRUBBER OUTLET
RUN NUMBER: 2 TIME: 9/28/93 1218-1320

TEST DATA

GAS METER COEFFICIENT	1.0052 Y	VOLUME OF LIQUID COLLECTED, ML	112.2 Vl
PITOT TUBE COEFFICIENT	0.841 Cp	GAS COMPOSITION, % V/V DRY;	
NOZZLE DIMENSIONS;		CARBON DIOXIDE	2.70 CD
DIAMETER, IN	0.184 Dn	OXYGEN	17.50 OX
AREA, SF	0.000185 An	CARBON MONOXIDE	0.00 CM
		NITROGEN (BY DIFFERENCE)	79.80 NI
STACK DIMENSIONS;			
DIAMETER/LENGTH, IN	30.00 Sl	AVE. TRAVERSE POINT DATA;	
WIDTH, IN	0.00 Sw	STACK TEMP., DEG F	128 Ts
AREA, SF	4.909 As	METER TEMP., DEG F	56 Tm
		ORIFICE PRESSURE, IN WC	0.803 Po
BAROMETRIC PRESSURE, IN HG	29.10 Pb	SQRT VELOCITY P., IN WC	1.008 Pv
STACK PRESSURES;		MASS OF PARTICULATE MATTER	
STATIC, IN WC	0.48 Pg	COLLECTED, G;	
ABSOLUTE, IN HG	29.14 Ps	FRONT CATCH (94.8%)	0.2882 Wf
		BACK CATCH (5.2%)	0.0157 Wb
SAMPLING TIME, MIN	60.00 Ti	TOTAL CATCH	0.3039 Wt
VOLUME OF GAS SAMPLED AT METER, DCF	30.383 Vm		

CALCULATED RESULTS

VOLUME OF GAS SAMPLED AT METER, DSCF	30.438 Vms	GAS MOLECULAR WEIGHT;	
		DRY BASIS, LB/LB-MOLE	29.13 Md
		WET BASIS, LB/LB-MOLE	27.49 Ms
EQUIVALENT VOLUME OF WATER VAPOR COLLECTED, SCF	5.279 Vw	AVERAGE GAS VELOCITY, FPS	62.14 Vs
GAS MOISTURE CONTENT;		GAS VOLUMETRIC FLOW RATE;	
VOLUME FRACTION	0.1478 Bws	ACTUAL, ACFM	18301 Qa
PERCENT BY VOLUME	14.78 Bwp	STANDARD, SCFM	15996 Qs
		DRY STANDARD, DSCFM	13631 Qsd
		ISOKINETIC VARIATION, %	98.99 I

PARTICULATE EMISSION PARAMETER	FRONT CATCH	BACK CATCH	TOTAL CATCH
PARTICULATE CONCENTRATION			
ACTUAL, GR/ACF	0.1088 Caf	0.0059 Cab	0.1147 Cat
STANDARD, GR/SCF	0.1244 Cwf	0.0068 Cwb	0.1312 Cwt
DRY STANDARD, GR/DSCF	0.1460 Csf	0.0080 Csb	0.1540 Cst
PARTICULATE EMISSION RATE, LB/HR			
CLASSICAL METHOD	17.07 Rcf	0.93 Rcb	18.00 Rct
RATIO OF AREAS METHOD	16.89 Rrf	0.92 Rrb	17.81 Rrt

STANDARD CONDITIONS: 68 DEG F, 29.92 IN HG * NON-APPLICABLE DATA

TRAVERSE POINT DATA SUMMARY AND VELOCITY PROFILE

PROJECT NUMBER: 9448 COMPANY: ELK RIVER BITUMINOUS
TEST NUMBER: 1 SOURCE: SCRUBBER OUTLET
RUN NUMBER: 3 TIME: 9/28/93 1410-1518

SAMPLING LOCATION PORT	POINT	TRAVERSE POINT DATA: VELOCITY PRESSURE IN WC	ORIFICE PRESSURE IN WC	TEMPERATURE, DEG.F STACK GAS	METER INLET	METER OUTLET	VELOCITY PROFILE: SQRT VELOCITY PRESSURE	GAS VELOCITY FT/SEC
A	1	1.000	0.950	129	52	50	1.000	61.64
A	2	1.000	0.770	130	52	50	1.000	61.69
A	3	1.050	0.820	128	52	50	1.025	63.10
A	4	1.100	0.860	132	55	51	1.049	64.81
A	5	1.000	0.780	131	55	51	1.000	61.74
A	6	1.100	0.860	130	58	51	1.049	64.70
A	7	1.100	0.860	131	60	50	1.049	64.75
A	8	0.950	0.750	127	62	51	0.975	59.97
A	9	0.980	0.770	129	62	51	0.990	61.02
A	10	1.100	0.860	127	63	51	1.049	64.53
A	11	1.200	0.940	129	64	51	1.095	67.52
A	12	1.050	0.820	132	64	51	1.025	63.32
B	1	0.940	0.740	126	60	52	0.970	59.61
B	2	0.970	0.760	129	62	52	0.985	60.70
B	3	1.150	0.910	133	62	52	1.072	66.32
B	4	1.200	0.940	132	62	52	1.095	67.69
B	5	1.250	0.980	131	61	52	1.118	69.03
B	6	1.200	0.940	132	60	51	1.095	67.69
B	7	1.200	0.940	130	60	51	1.095	67.58
B	8	1.150	0.900	132	58	51	1.072	66.27
B	9	1.100	0.780	131	56	51	1.049	64.75
B	10	0.950	0.750	130	56	51	0.975	60.13
B	11	0.960	0.750	132	55	51	0.980	60.54
B	12	0.920	0.720	130	55	51	0.959	59.17
AVERAGE		1.068	0.840	130	59	51	1.032	63.68

PARTICULATE EMISSION TEST CALCULATIONS

PROJECT NUMBER: 9448 COMPANY: ELK RIVER BITUMINOUS
TEST NUMBER: 1 SOURCE: SCRUBBER OUTLET
RUN NUMBER: 3 TIME: 9/28/93 1410-1518

TEST DATA

GAS METER COEFFICIENT	1.0052 Y	VOLUME OF LIQUID COLLECTED, ML	120.4 Vl
PITOT TUBE COEFFICIENT	0.841 Cp	GAS COMPOSITION, % V/V DRY;	
NOZZLE DIMENSIONS;		CARBON DIOXIDE	3.00 CD
DIAMETER, IN	0.184 Dn	OXYGEN	17.00 OX
AREA, SF	0.000185 An	CARBON MONOXIDE	0.00 CM
		NITROGEN (BY DIFFERENCE)	80.00 NI
STACK DIMENSIONS;			
DIAMETER/LENGTH, IN	30.00 Sl	AVE. TRAVERSE POINT DATA;	
WIDTH, IN	0.00 Sw	STACK TEMP., DEG F	130 Ts
AREA, SF	4.909 As	METER TEMP., DEG F	55 Tm
		ORIFICE PRESSURE, IN WC	0.840 Po
BAROMETRIC PRESSURE, IN HG	29.13 Pb	SQRT VELOCITY P., IN WC	1.032 Pv
STACK PRESSURES;		MASS OF PARTICULATE MATTER COLLECTED, G;	
STATIC, IN WC	0.49 Pg	FRONT CATCH (98.0%)	0.3446 Wf
ABSOLUTE, IN HG	29.17 Ps	BACK CATCH (2.0%)	0.0071 Wb
SAMPLING TIME, MIN	60.00 Ti	TOTAL CATCH	0.3517 Wt
VOLUME OF GAS SAMPLED AT METER, DCF	31.753 Vm		

CALCULATED RESULTS

VOLUME OF GAS SAMPLED AT METER, DSCF	31.939 Vms	GAS MOLECULAR WEIGHT;	
		DRY BASIS, LB/LB-MOLE	29.16 Md
		WET BASIS, LB/LB-MOLE	27.48 Ms
EQUIVALENT VOLUME OF WATER VAPOR COLLECTED, SCF	5.667 Vw	AVERAGE GAS VELOCITY, FPS	63.68 Vs
GAS MOISTURE CONTENT;		GAS VOLUMETRIC FLOW RATE;	
VOLUME FRACTION	0.1507 Bws	ACTUAL, ACFM	18754 Qa
PERCENT BY VOLUME	15.07 Bwp	STANDARD, SCFM	16357 Qs
		DRY STANDARD, DSCFM	13892 Qsd
		ISOKINETIC VARIATION, %	101.92 I

PARTICULATE EMISSION PARAMETER	FRONT CATCH	BACK CATCH	TOTAL CATCH
PARTICULATE CONCENTRATION			
ACTUAL, GR/ACF	0.1232 Caf	0.0025 Cab	0.1258 Cat
STANDARD, GR/SCF	0.1413 Cwf	0.0029 Cwb	0.1442 Cwt
DRY STANDARD, GR/DSCF	0.1664 Csf	0.0034 Csb	0.1698 Cst
PARTICULATE EMISSION RATE, LB/HR			
CLASSICAL METHOD	19.83 Rcf	0.41 Rcb	20.23 Rct
RATIO OF AREAS METHOD	20.19 Rrf	0.42 Rrb	20.61 Rrt

STANDARD CONDITIONS: 68 DEG F, 29.92 IN HG * NON-APPLICABLE DATA

TRAVERSE POINT DATA SUMMARY AND VELOCITY PROFILE

PROJECT NUMBER: 9448 COMPANY: ELK RIVER BITUMINOUS
TEST NUMBER: 1 SOURCE: SCRUBBER OUTLET
RUN NUMBER: 4 TIME: 9/28/93 1556-1657

SAMPLING LOCATION PORT	POINT	TRAVERSE POINT DATA: VELOCITY PRESSURE IN WC	ORIFICE PRESSURE IN WC	TEMPERATURE, DEG.F STACK GAS	METER INLET	METER OUTLET	VELOCITY PROFILE: SQRT VELOCITY PRESSURE	GAS VELOCITY FT/SEC
A	1	0.920	0.720	120	53	51	0.959	58.70
A	2	0.970	0.760	126	56	52	0.985	60.58
A	3	1.000	0.780	129	58	52	1.000	61.67
A	4	1.050	0.820	132	61	52	1.025	63.35
A	5	1.100	0.860	130	63	52	1.049	64.73
A	6	1.150	0.900	132	65	52	1.072	66.30
A	7	1.100	0.860	131	68	51	1.049	64.79
A	8	1.250	0.970	130	69	51	1.118	69.00
A	9	1.200	0.940	129	70	51	1.095	67.55
A	10	1.100	0.860	133	71	52	1.049	64.90
A	11	1.000	0.780	130	72	52	1.000	61.72
A	12	0.950	0.740	132	72	53	0.975	60.26
B	1	1.100	0.860	130	65	53	1.049	64.73
B	2	1.150	0.900	126	65	53	1.072	65.96
B	3	1.200	0.940	129	64	53	1.095	67.55
B	4	1.250	0.970	128	64	53	1.118	68.89
B	5	1.200	0.940	129	64	53	1.095	67.55
B	6	1.150	0.900	131	64	53	1.072	66.24
B	7	1.100	0.860	130	64	53	1.049	64.73
B	8	1.050	0.820	131	63	53	1.025	63.30
B	9	1.250	0.970	130	62	53	1.118	69.00
B	10	1.200	0.940	130	63	53	1.095	67.61
B	11	1.100	0.860	132	63	53	1.049	64.84
B	12	1.150	0.900	128	62	53	1.072	66.07
AVERAGE		1.112	0.869	130	64	52	1.054	65.00

PARTICULATE EMISSION TEST CALCULATIONS

PROJECT NUMBER: 9448 COMPANY: ELK RIVER BITUMINOUS
TEST NUMBER: 1 SOURCE: SCRUBBER OUTLET
RUN NUMBER: 4 TIME: 9/28/93 1556-1657

TEST DATA

GAS METER COEFFICIENT	1.0052	Y	VOLUME OF LIQUID COLLECTED, ML	122.2	Vl
PITOT TUBE COEFFICIENT	0.841	Cp			
			GAS COMPOSITION, % V/V DRY;		
NOZZLE DIMENSIONS;			CARBON DIOXIDE	3.00	CD
DIAMETER, IN	0.184	Dn	OXYGEN	17.00	OX
AREA, SF	0.000185	An	CARBON MONOXIDE	0.00	CM
			NITROGEN (BY DIFFERENCE)	80.00	NI
STACK DIMENSIONS;					
DIAMETER/LENGTH, IN	30.00	Sl	AVE. TRAVERSE POINT DATA;		
WIDTH, IN	0.00	Sw	STACK TEMP., DEG F	130	Ts
AREA, SF	4.909	As	METER TEMP., DEG F	58	Tm
			ORIFICE PRESSURE, IN WC	0.869	Po
BAROMETRIC PRESSURE, IN HG	29.15	Pb	SQRT VELOCITY P., IN WC	1.054	Pv
STACK PRESSURES;			MASS OF PARTICULATE MATTER COLLECTED, G;		
STATIC, IN WC	0.47	Pg	FRONT CATCH (98.7%)	0.3887	Wf
ABSOLUTE, IN HG	29.18	Ps	BACK CATCH (1.3%)	0.0051	Wb
SAMPLING TIME, MIN	60.00	Ti	TOTAL CATCH	0.3938	Wt
VOLUME OF GAS SAMPLED AT METER, DCF	31.428	Vm			

CALCULATED RESULTS

VOLUME OF GAS SAMPLED AT METER, DSCF	31.424	Vms	GAS MOLECULAR WEIGHT;		
			DRY BASIS, LB/LB-MOLE	29.16	Md
			WET BASIS, LB/LB-MOLE	27.43	Ms
EQUIVALENT VOLUME OF WATER VAPOR COLLECTED, SCF	5.752	Vw	AVERAGE GAS VELOCITY, FPS	65.00	Vs
GAS MOISTURE CONTENT;			GAS VOLUMETRIC FLOW RATE;		
VOLUME FRACTION	0.1547	Bws	ACTUAL, ACFM	19144	Qa
PERCENT BY VOLUME	15.47	Bwp	STANDARD, SCFM	16725	Qs
			DRY STANDARD, DSCFM	14138	Qsd
			ISOKINETIC VARIATION, %	98.54	I

PARTICULATE EMISSION PARAMETER	FRONT CATCH	BACK CATCH	TOTAL CATCH
PARTICULATE CONCENTRATION			
ACTUAL, GR/ACF	0.1409 Caf	0.0018 Cab	0.1427 Cat
STANDARD, GR/SCF	0.1612 Csf	0.0021 Csb	0.1633 Cst
DRY STANDARD, GR/DSCF	0.1907 Csf	0.0025 Csb	0.1932 Cst
PARTICULATE EMISSION RATE, LB/HR			
CLASSICAL METHOD	23.13 Rcf	0.30 Rcb	23.43 Rct
RATIO OF AREAS METHOD	22.78 Rrf	0.30 Rrb	23.08 Rrt

STANDARD CONDITIONS: 68 DEG F, 29.92 IN HG * NON-APPLICABLE DATA

TABLE SUMMARY OF PARTICULATE EMISSION TEST RESULTS

PROJECT NUMBER: 9448 COMPANY: ELK RIVER BITUMINOUS
TEST NUMBER: 1 SOURCE: SCRUBBER OUTLET

TEST PARAMETER	RUN 2	RUN 3	RUN 4
TEST DATE	9/28/93	9/28/93	9/28/93
TIME OF TEST, HR;			
START	1218	1410	1556
FINISH	1320	1518	1657
EFFLUENT TEMPERATURE, DEGREES F	128	130	130
BAROMETRIC PRESSURE, IN HG	29.10	29.13	29.15
EFFLUENT MOISTURE CONTENT, % V/V	14.8	15.1	15.5
EFFLUENT COMPOSITION, % V/V DRY;			
CARBON DIOXIDE	2.7	3.0	3.0
OXYGEN	17.5	17.0	17.0
CARBON MONOXIDE	0.0	0.0	0.0
EFFLUENT VOLUMETRIC FLOW RATE;			
ACTUAL CONDITIONS, ACFM	18301	18754	19144
STANDARD CONDITIONS, SCFM	15996	16357	16725
DRY STANDARD CONDITIONS, DSCFM	13631	13892	14138
ISOKINETIC VARIATION, %	99.0	101.9	98.5
EFFLUENT PARTICULATE CONCENTRATION;			
EFFLUENT FRONT HALF PARTICULATE CONCENTRATION;			
ACTUAL CONDITIONS, GR/ACF	0.1088	0.1232	0.1409
STANDARD CONDITIONS, GR/SCF	0.1244	0.1413	0.1612
DRY STANDARD CONDITIONS, GR/DSCF	0.1460	0.1664	0.1907
EFFLUENT BACK HALF PARTICULATE CONCENTRATION;			
ACTUAL CONDITIONS, GR/ACF	0.0059	0.0025	0.0018
STANDARD CONDITIONS, GR/SCF	0.0068	0.0029	0.0021
DRY STANDARD CONDITIONS, GR/DSCF	0.0080	0.0034	0.0025
EFFLUENT TOTAL PARTICULATE CONCENTRATION;			
ACTUAL CONDITIONS, GR/ACF	0.1147	0.1258	0.1427
STANDARD CONDITIONS, GR/SCF	0.1312	0.1442	0.1633
DRY STANDARD CONDITIONS, GR/DSCF	0.1540	0.1698	0.1932
SOURCE PARTICULATE EMISSION RATE;			
CLASSICAL METHOD, LB/HR	18.00	20.23	23.43
RATIO OF AREAS METHOD, LB/HR	17.81	20.61	23.08

PARTICULATE CONCENTRATION AND EMISSION RATES BASED ON ANALYSIS OF THE SAMPLING TRAIN FRONT AND BACK CATCHES.

STANDARD CONDITIONS: 68 DEGREES FAHRENHEIT, 29.92 INCHES OF MERCURY.

VOLUMETRIC FLOW RATE CALCULATION

PROJECT NUMBER: 9448 COMPANY: ELK RIVER BITUMINOUS
TEST DATE: 9-28-93 SOURCE: SCRUBBER OUTLET

Preliminary Flowrate Determination

DUCT DIMENSIONS;		
DIAMETER, INCHES	30.00	DM
CROSS-SECTIONAL AREA, SQ FT	4.909	AR
EFFLUENT TEMPERATURE, DEG F	130	TS
MOISTURE CONTENT DETERMINATION:		
EFFLUENT WET BULB TEMPERATURE, DEG F	130	TW
EFFLUENT DEW POINT TEMPERATURE, DEG F	130	TD
EFFLUENT RELATIVE HUMIDITY, %	100.0	RH
EFFLUENT MOISTURE CONTENT, % V/V	15.5	MC
DUCT PRESSURES;		
BAROMETRIC PRESSURE, IN HG	29.08	PB
STATIC PRESSURE, IN WC	0.50	PS
ABSOLUTE PRESSURE, IN WC	29.12	PA
EFFLUENT COMPOSITION;		
CARBON DIOXIDE CONTENT, % V/V DRY	3.0	CD
OXYGEN CONTENT, % V/V DRY	17.0	OX
EFFLUENT MOLECULAR WEIGHT;		
DRY BASIS, LB/LB-MOLE	29.16	MD
WET BASIS, LB/LB-MOLE	27.43	MS
PITOT TUBE COEFFICIENT	0.841	CP

EFFLUENT VELOCITY PRESSURES, IN WC;

POINT	PORT A	PORT B
1	1.400	1.400
2	1.300	1.300
3	1.100	1.300
4	1.050	1.200
5	1.200	1.100
6	1.300	1.150
7	1.500	1.100
8	1.300	1.050
9	1.250	1.000
10	1.100	1.050
11	1.100	1.200
12	1.200	1.250

AVE. SQUARE-ROOT VELOCITY PRESSURE, IN WC ..	1.10	PV
EFFLUENT AVERAGE VELOCITY, FT/SEC	67.715	VS
EFFLUENT VOLUMETRIC FLOW RATE;		
ACTUAL, ACFM	19943	FA
STANDARD, SCFM	17371	FW
DRY STANDARD, DSCFM	14672	FD

EQUATIONS USED TO CALCULATE THE VOLUMETRIC FLOW RATE

AR = 0.004545 * DM * DM

PA = PB + PS/13.6

MD = 0.44*CD + 0.32*OX + 0.28*(100-CD-OX)

MS = MD*(1-MC/100) + 0.18*MC

VS = 85.48 * CP * PV * SQRT((460+TS)/(MS*PA))

FA = 60 * VS * AR

FW = 17.65 * FA * PA / (TS+460)

FD = FW * (1-MC/100)

STANDARD CONDITIONS: 68 DEG F, 29.92 IN HG

TABLE ANALYSIS OF VISIBLE EMISSION TEST DATA

PROJECT NUMBER: 9448
DATE TESTED: 9-28-93
TIME OF TEST: 1110

COMPANY: ELK RIVER BITUMINOUS
SOURCE: SCRUBBER OUTLET
OBSERVER: MR. ALAN TROWBRIDGE
RE-CERTIFICATION DATE: 10-1-93

Test-Run # 1-1

PLUME OPACITY OBSERVATIONS

MIN-UTE	** 00	SECONDS 15	30	** 45	MIN-UTE	** 00	SECONDS 15	30	** 45	MIN-UTE	** 00	SECONDS 15	30	** 45
0	0	0	0	0	11	0	0	0	0	22	0	0	0	0
1	0	0	0	0	12	0	0	0	0	23	0	0	0	0
2	0	0	0	0	13	0	0	0	0	24	0	0	0	0
3	0	0	0	0	14	0	0	0	0	25	0	0	0	0
4	0	0	0	0	15	0	0	0	0	26	0	0	0	0
5	0	0	0	0	16	0	0	0	0	27	0	5	10	5
6	0	0	0	0	17	0	0	5	0	28	0	5	0	0
7	0	0	0	0	18	5	0	5	5	29	0	0	0	0
8	0	0	5	5	19	0	5	0	0	30	0	5	0	5
9	0	0	0	0	20	0	0	5	0	31	0	0		
10	0	0	0	0	21	0	0	0	0					

SUMMARY OF TEST DATA

PLUME OPACITY %	PERCENT OF TIME AT OPACITY	PERCENT OF TIME OPACITY EXCEEDED
0	88.89	11.11
5	10.32	0.79
10	0.79	0.00
15	0.00	0.00
20	0.00	0.00
25	0.00	0.00
30	0.00	0.00
35	0.00	0.00
40	0.00	0.00
45	0.00	0.00
50	0.00	0.00
55	0.00	0.00
60	0.00	0.00
65	0.00	0.00
70	0.00	0.00
75	0.00	0.00
80	0.00	0.00
85	0.00	0.00
90	0.00	0.00
95	0.00	0.00
100	0.00	0.00

OPACITY RANGE,%	TIME OPACITY IN RANGE % OF TIME	MIN/HR
0 - 20	100.00	60.00
25 - 40	0.00	0.00
45 - 60	0.00	0.00
> 60	0.00	0.00

MAXIMUM OBSERVED OPACITY, %: 10
MINIMUM OBSERVED OPACITY, %: 0
ARITHMETIC MEAN OPACITY, %: 0.6

SIX-MINUTE AVERAGE OPACITY, %

MAXIMUM:	1.5	(25:30-31:15)
2nd LARGEST:	1.3	(17:30-23:15)
3rd LARGEST:	0.4	(08:30-14:15)
4th LARGEST:	0.0	(02:30-08:15)

TABLE ANALYSIS OF VISIBLE EMISSION TEST DATA

PROJECT NUMBER: 9448
DATE TESTED: 9-28-93
TIME OF TEST: 1220

COMPANY: ELK RIVER BITUMINOUS
SOURCE: SCRUBBER OUTLET
OBSERVER: MR. ALAN TROWBRIDGE
RE-CERTIFICATION DATE: 10-1-93

Test-Run # 1-2

PLUME OPACITY OBSERVATIONS

MIN-UTE	** 00	SECONDS 15	30	** 45	MIN-UTE	** 00	SECONDS 15	30	** 45	MIN-UTE	** 00	SECONDS 15	30	** 45
0	0	0	0	0	20	15	0	0	0	40	0	5	0	5
1	0	5	0	5	21	0	0	0	0	41	5	15	5	10
2	0	0	0	0	22	0	5	0	0	42	5	5	5	0
3	5	0	5	5	23	10	5	5	5	43	0	0	20	5
4	0	5	5	10	24	5	5	15	15	44	15	5	0	0
5	0	0	0	0	25	10	10	5	0	45	5	10	15	5
6	0	0	0	0	26	0	10	5	5	46	0	5	10	0
7	0	0	0	0	27	10	5	0	15	47	10	5	5	0
8	0	0	0	0	28	5	0	15	10	48	0	0	0	10
9	0	0	0	0	29	0	0	5	5	49	5	0	0	0
10	0	0	0	0	30	0	0	15	5	50	0	0	0	0
11	0	0	0	0	31	5	0	5	10	51	0	0	0	0
12	0	5	10	10	32	10	5	5	10	52	0	0	0	5
13	5	0	5	5	33	5	5	0	0	53	10	0	0	0
14	5	5	15	10	34	0	0	5	10	54	0	0	0	0
15	0	0	5	5	35	0	0	0	5	55	5	0	0	0
16	0	0	0	0	36	5	0	5	0	56	0	0	10	0
17	0	0	0	0	37	0	0	0	0	57	5	5	5	0
18	0	0	0	0	38	0	0	0	0	58	0	0	5	10
19	0	0	0	5	39	0	0	0	0	59	0	5	0	0

SUMMARY OF TEST DATA

PLUME OPACITY %	PERCENT OF TIME AT OPACITY	PERCENT OF TIME OPACITY EXCEEDED
0	60.42	39.58
5	25.83	13.75
10	9.17	4.58
15	4.17	0.42
20	0.42	0.00
25	0.00	0.00
30	0.00	0.00
35	0.00	0.00
40	0.00	0.00
45	0.00	0.00
50	0.00	0.00
55	0.00	0.00
60	0.00	0.00
65	0.00	0.00
70	0.00	0.00
75	0.00	0.00
80	0.00	0.00
85	0.00	0.00
90	0.00	0.00
95	0.00	0.00
100	0.00	0.00

OPACITY RANGE,%	TIME OPACITY IN RANGE % OF TIME	MIN/HR
0 - 20	100.00	60.00
25 - 40	0.00	0.00
45 - 60	0.00	0.00
> 60	0.00	0.00

MAXIMUM OBSERVED OPACITY, %: 20
MINIMUM OBSERVED OPACITY, %: 0
ARITHMETIC MEAN OPACITY, %: 2.9

SIX-MINUTE AVERAGE OPACITY, %

MAXIMUM:	7.1	(23:00-28:45)
2nd LARGEST:	6.3	(41:15-47:00)
3rd LARGEST:	4.4	(30:30-36:15)
4th LARGEST:	3.5	(12:15-18:00)
5th LARGEST:	2.3	(53:00-58:45)

APPENDIX B: FIELD DATA FORMS

~~ODOR TEST~~

Field Data Sheet

MMT Job Number 9448

Date 9-28-93

Company Elk

Source [illegible] Outlet

Dimensions, inches 30" ⌀ Dim

Test Team Members AT - TG - BA

Ambient Temperature, °F 44

Barometric Pressure, in. Hg 29.08

Static Pressure, in. WC + .50

Dry Bulb Temp., °F 130

Wet Bulb Temp., °F 130

Moisture Content, % 15.6

VELOCITY TRAVERSE: Time 0904 Pitot Tube Coefficient .841 "11" P.L.

Traverse point number	Inches from wall	Inches from port	PORT A ΔP in. H_2O	PORT A Temp. °F	PORT B ΔP in. H_2O	PORT B Temp. °F	PORT C ΔP in. H_2O	PORT C Temp. °F	PORT D ΔP in. H_2O	PORT D Temp. °F
1	1.0	8.75	1.4		1.4					
2	2.0	9.75	1.3		1.3					
3	3.5	11.25	1.1		1.3					
4	5.3	13.05	1.05		1.2					
5	7.5	15.25	1.2		1.1					
6	10.7	18.45	1.3		1.15		$\bar{X}$	V_p =	1.20	n.WC
7	19.4	27.15	1.5		1.1		Min	=	1.0	
8	22.5	30.25	1.3		1.05					
9	24.7	32.45	1.25		1.0		Max	=	1.4	
10	26.5	34.25	1.1		1.05					
11	28.0	35.75	1.1		1.2					
12	29.0	36.75	1.2		1.25					

~~ODOR SAMPLES~~

Bag Id.	Time

, cuft
25-30 in Hg
75 gpm

OBSERVERS

Name	Organization

COMMENTS

ID_N = .203

Act N_D = .184 ID = 57

Port length = 7.75 inches

F.M. 8760

SOURCE EMISSION TEST
FIELD DATA SHEET

TEST: 1	RUN: 1
Page 1 of 1	

TEST IDENTIFICATION	EQUIPMENT IDENTIFICATION	NOMOGRAPH PARAMETERS
MMT Job Number: 9448	Control Unit No.: 4	ΔH@ 1.77
Date: 9-28-93	Gas Meter Coefficient: 1.01	TM 50
Company: Elk River Bituminous	Sample Box No.: 4	MC 16
Source: Scrubber Outlet	Probe No.: 45" Length:	PS/PM 1.0
Source Dimensions: 30" Ø Dia	Pitot No.: 41" Coefficient: 0.841	C 1.01
Test Team: AT - TG - BA	Nozzle No.: 57 Diameter: .184" Ø Dia.	TS 130
Test Procedure: EPA 1-5 & 9	Filter No.: ~~8760~~ 8761	R
Ambient Temp., °F: 46	Barometric Pressure, in.Hg: 29.08	Static Pressure, in.WC: +0.47

.22 = ΔP inch, Ø dia.

CLOCK TIME hours	TRAVERSE POINT NUMBER	SAMPLE TIME min.	SAMPLE VOLUME cu.ft.	VELOCITY HEAD in.WC	ORIFICE ΔH, in.WC REQ.	ORIFICE ΔH, in.WC ACT.	PUMP VAC. inHG	TEMPERATURE, DEG F STACK GAS	GAS METER IN	GAS METER OUT	OVEN	PROBE	LAST IMP.
1108:00	1	-	35.581	~~0.94~~ 1.1	.85	.85	6	126	47	47	276	246	45
	2	2.5	36.95	1.1	.85	.85	7	127	48	46	264	250	37
1113	3	5	38.2	1.1	.85	.85	7	126	50	46	274	246	37
	4	7.5	39.6	.95	.73	.73	6	119	55	47	268	240	38
1118	5	10	40.7	.94	.73	.73	6	116	56	47	270	241	38
	6	12.5	41.8	.86	.67	.67	6	120	58	47	271	250	38
1123	7	15	43.2	.87	.67	.67	6	125	59	47	275	250	38
	8	17.5	44.4	.67	.52	.52	5	127	60	48	277	249	38
1128	9	20	45.4	.48	.37	.37	4	126	60	48	272	250	38
	10	22.5		.42	.32	.37	4						
1133	11	25	47.0										
	12	27.5											
	End	30											
	1	-											
	2	2.5											
	3	5											
	4	7.5											
	5	10											
	6	12.5											
	7	15											
	8	17.5											
	9	20											
	10	22.5											
	11	25											
	12	27.5											
	-	30											

MOISTURE DETERMINATION					
IMPINGER	1	2	3	4	5
Final					
Initial	100	100	0	746.7	
Difference					
Total Moisture Collected:					

SYSTEM LEAK CHECKS		
Time	Rate (cfm)	Vac. (in.Hg)
1042	.003	23

Impinger Catch Description:

DETERMINATION OF GAS COMPOSITION BY ORSAT ANALYSIS								
Sample Id:	Replicate 1		Replicate 2		Replicate 3		Average	
1-1	Buret Reading	Percent Volume	Buret Reading	Percent Volume	Buret Reading	Percent Volume	Compound	Percent Volume
Initial Reading								
Carbon Dioxide							CO_2	
Oxygen							O_2	
Carbon Monoxide							CO	

Total Sampling Time, min.: _____
Volume of Gas Sampled, DCF: _____

FORM: S-FD-5

FIELD DATA SHEET

Page 1 of 1

TEST IDENTIFICATION	EQUIPMENT IDENTIFICATION	NOMOGRAPH PARAMETERS
MMT Job Number: 9448	Control Unit No.: 4	ΔH@ 1.77
Date: 9-28-93	Gas Meter Coefficient: 1.01	TM 54
Company: Elk River Bituminous	Sample Box No.: 4	MC 16 + droplets
Source: Scrubber Outlet	Probe No.: 45" Length: 45" S.S.	Ps/Pm ≈1.0
Source Dimensions: 30" ⌀ DIA.	Pitot No.: 41" Coefficient: 0.841	C 1.01
Test Team: AT - TG - BA	Nozzle No.: 57 Diameter: .184	TS 126
Test Procedure: EPA 1-5 & 9	Filter No.: 8762	R
Ambient Temp., °F: 48	Barometric Pressure, in.Hg: 29.10	Static Pressure, in.WC: +.48

CLOCK TIME hours	TRAVERSE POINT NUMBER	SAMPLE TIME min.	SAMPLE VOLUME cu.ft.	VELOCITY HEAD in.WC	ORIFICE ΔH, in.WC REQ.	ORIFICE ΔH, in.WC ACT.	PUMP VAC. inHG	TEMPERATURE, DEG F STACK GAS	GAS METER IN	GAS METER OUT	OVEN	PROBE	LAST IMP.
1218:00	1	-	49.376	1.1	.87	.87	6	126	48	48	261	200	45
	2	2.5	50.8	1.1	.87	.87	6	125	51	48	268	59	44
1223	3	5	52.2	1.05	.83	.83	6	128	55	48	271	144	45
	4	7.5	53.4	.99	.79	.79	6	127	58	48	271	201	45
1228	5	10	54.7	1.05	.83	.83	6	128	60	48	266	55	45
	6	12.5	55.9	.88	.69	.69	5	127	60	48	263	53	45
1233	7	15	57.0	.92	.72	.72	5	128	61	49	274	54	45
	8	17.5	58.4	.92	.72	.72	5	127	63	49	276	201	44
1238	9	20	59.4	.88	.69	.69	5	129	63	49	276	202	44
	10	22.5	60.7	.92	.73	.73	5	128	64	50	275	203	44
1243	11	25	61.8	.89	.70	.70	5	129	65	50	271	203	44
	12	27.5	63.0	.88	.69	.69	5	126	66	50	265	192	44
1248	-	30	64.3										
1250:30	1	-		.97	.76	.76	6	127	60	51	266	58	44
1253	2	2.5	65.7	.96	.75	.75	6	129	62	51	262	55	44
1256	3	5	66.7	.96	.75	.75	6	130	63	51	259	96	44
1258	4	7.5	67.8	.95	.75	.75	6	129	64	51	264	70	44
1300	5	10	69.3	1.1	.87	.87	7	131	65	51	271	71	44
1303	6	12.5	70.8	1.15	.90	.90	8	130	67	52	272	83	44
1305:30	7	15	72.2	1.35	1.06	1.06	10	128	68	53	268	74	44
	8	17.5	73.4	1.2	.94	.94	10	130	68	52	271	73	44
1310	9	20	74.5	1.25	.98	.98	10	128	67	52	263	155	44
	10	22.5	76.1	1.1	.87	.87	11	129	67	52	270	88	44
1315	11	25	77.5	.97	.76	.76	10	130	66	52	265	103	44
	12	27.5	79.0	.95	.75	.75	10	129	66	53	269	115	44
1320	-	30	79.719										

Annette Elliot present MECA Barnes office Present during 1-1 & 1-2

MOISTURE DETERMINATION					
IMPINGER	1	2	3	4	5
Final					
Initial	100	100	0	701.9	
Difference					
Total Moisture Collected:					

SYSTEM LEAK CHECKS		
Time	Rate (cfm)	Vac. (in.Hg)
1208	.007	19
1322	.008	22"

Impinger Catch Description:

DETERMINATION OF GAS COMPOSITION BY ORSAT ANALYSIS								
Sample Id:	Replicate 1		Replicate 2		Replicate 3		Average	
1-2	Buret Reading	Percent Volume	Buret Reading	Percent Volume	Buret Reading	Percent Volume	Compound	Percent Volume
Initial Reading								
Carbon Dioxide							CO2	2.7
Oxygen							O2	
Carbon Monoxide							CO	

ORSAT FORM

Total Sampling Time, min.: 60

Volume of Gas Sampled, DCF: 30.383

need 30 dcf

FORM: S-FD-5

FIELD DATA SHEET

Page 1 of 1

TEST IDENTIFICATION	EQUIPMENT IDENTIFICATION	NOMOGRAPH PARAMETERS
MMT Job Number: 9448	Control Unit No.: 4	ΔH@ 1.77
Date: 9-28-93	Gas Meter Coefficient: 1.01	TM 57
Company: Elk River Bituminous	Sample Box No.: 4	MC 18
Source: Scrubber outlet	Probe No.: 45" Length: 45" S.S.	PS/PMF 1.0
Source Dimensions: 30"	Pitot No.: 41" Coefficient: 0.841	C 1.01
Test Team: AT - TG - BA	Nozzle No.: ~~5~~ Diameter: ~~.244~~	TS 130-125
Test Procedure: EPA 1-5 & 9	Filter No.: 8763	R
Ambient Temp., °F: 51	Barometric Pressure, in.Hg: 29.13	Static Pressure, in.WC: +.49

Nozzle 58 .184 '0

CLOCK TIME hours	TRAVERSE POINT NUMBER	SAMPLE TIME min.	SAMPLE VOLUME cu.ft.	VELOCITY HEAD in.WC	ORIFICE ΔH, in.WC REQ.	ORIFICE ΔH, in.WC ACT.	PUMP VAC. inHG	TEMPERATURE, DEG F STACK GAS	GAS METER IN	GAS METER OUT	OVEN	PROBE	LAST IMP.
1410	1	-	86.598	1.0	[illegible]	.95	12	129	52	50	240	131	43
	2	2.5	88.0	1.0	.77	.77	10	130	52	50	241	195	43
1415	3	5	90.4	1.05	.82	.82	10	128	52	50	238	238	43
	4	7.5	91.9	1.1	.86	.86	11	132	55	51	231	241	42
1427	5	10	92.9	1.0	.78	.78	10	131	55	51	238	247	41
	6	12.5	94.3	1.1	.86	.86	10	130	58	51	233	236	40
1432	7	15	95.4	1.1	.86	.86	10	131	60	50	231	235	40
	8	17.5	96.8	.95	.75	.75	10	127	62	51	231	243	40
1437	9	20	97.9	.98	.77	.77	11	129	62	51	234	247	40
	10	22.5	99.2	1.1	.86	.86	11	127	63	51	237	248	40
1442	11	25	100.5	1.2	.94	.94	13	129	64	51	238	249	40
	12	27.5	101.9	1.05	.82	.82	12	132	64	51	239	245	
1447	-	30	103.5										
1448	1	-	X	.94	.74	.74	12	126	60	52	280	211	40
	2	2.5	104.7	.97	.76	.76	12	129	62	52	277	224	40
1453	3	5	105.9	1.15	.91	.91	13	133	62	52	280	229	40
	4	7.5	107.3	1.2	.94	.94	13	132	62	52	263	230	40
1458	5	10	108.6	1.25	.98	.98	14	131	61	52	265	242	40
	6	12.5	109.9	1.2	.94	.94	13	132	60	51	238	237	40
1503	7	15	111.0	1.2	.94	.94	13	130	60	51	245	233	40
	8	17.5	112.8	1.15	.90	.90	13	132	58	51	249	231	40
1508	9	20	114.1	1.0	.78	.78	14	131	56	51	254	246	40
	10	22.5	115.0	.95	.75	.75	14	130	56	51	251	251	40
1513	11	25	116.1	.96	.75	.75	14	132	55	51	247	228	40
	12	27.5	117.2	.92	.72	.72	15	130	55	51	249	232	40
1518	-	30	118.351										

MOISTURE DETERMINATION

IMPINGER	1	2	3	4	5
Final					
Initial	100	100	0	739.9	
Difference					

Total Moisture Collected:

SYSTEM LEAK CHECKS

Time	Rate (cfm)	Vac. (in.Hg)
1400	.005	22
1520	.004	20

Impinger Catch Description:

DETERMINATION OF GAS COMPOSITION BY ORSAT ANALYSIS

Sample Id: 1-3	Replicate 1 Buret Reading	Replicate 1 Percent Volume	Replicate 2 Buret Reading	Replicate 2 Percent Volume	Replicate 3 Buret Reading	Replicate 3 Percent Volume	Average Compound	Average Percent Volume
Initial Reading							CO_2	3.0
Carbon Dioxide							O_2	17.0
Oxygen							CO	
Carbon Monoxide								

Total Sampling Time, min.: 60

Volume of Gas Sampled, DCF: 31.753

FORM: S-FD-5

FIELD DATA SHEET

Page 1 of 1

TEST IDENTIFICATION	EQUIPMENT IDENTIFICATION	NOMOGRAPH PARAMETERS
MMT Job Number: 9448	Control Unit No.: 4	ΔH@ 1.77
Date: 9-28-93	Gas Meter Coefficient: 1.01	TM 54
Company: Elk River Bituminous	Sample Box No.: 4	MC 16
Source: Scrubber Outlet	Probe No.: 45" Length: 45" S.S.	PS/PM ≈ 1.0
Source Dimensions: 30"	Pitot No.: 41" Coefficient: 0.841	C 1.01
Test Team: AT - TG - BA	Nozzle No.: 58 Diameter: .184 in Dia.	TS 130
Test Procedure: EPA 1-5 & 9	Filter No.: 8764	R
Ambient Temp., °F: 53	Barometric Pressure, in.Hg: 29.15	Static Pressure, in.WC: +.47

	CLOCK TIME hours	TRAVERSE POINT NUMBER	SAMPLE TIME min.	SAMPLE VOLUME cu.ft.	VELOCITY HEAD in.WC	ORIFICE ΔH, in.WC REQ.	ORIFICE ΔH, in.WC ACT.	PUMP VAC. inHG	TEMPERATURE, DEG F STACK GAS	GAS METER IN	GAS METER OUT	OVEN	PROBE	LAST IMP.
	1556	1	-	149.687	.92	.72	.72	5	120	53	51	246	244	47
150.9		2	2.5	151.0	.97	.76	.76	5	126	56	52	251	241	46
152.1	1601	3	5	152.0	1.0	.78	.78	6	129	58	52	258	240	45
153.4		4	7.5	153.2	1.05	.82	.82	6	132	61	52	270	232	45
154.6	1606	5	10	154.7	1.1	.86	.86	7	130	63	52	272	235	45
155.9		6	12.5	156.0	1.15	.90	.90	7	132	65	52	270	239	45
157.3	1611	7	15	157.2	1.1	.86	.86	7	131	68	51	265	201	45
158.6		8	17.5	159	1.25	.97	.97	9	130	65	51	268	190	45
159.9	1616	9	20	160.2	1.2	.94	.94	9	129	70	51	271	192	45
161.3		10	22.5	161.5	1.1	.86	.86	9	133	71	52	270	194	45
162.6	1621	11	25	162.7	1.0	.780	.78	8	130	72	52	259	204	45
164.0		12	27.5	164	.95	.74	.74	8	132	72	53	257	207	45
165.1	1626	-	30	165.4										
	1627	1	-	X	1.1	.86	.86	9	130	65	53	249	208	45
166.4		2	2.5	166.6	1.15	.90	.90	9	126	65	53	242	211	45
167.7	1632	3	5	167.9	1.2	.94	.94	9	129	64	53	251	231	45
169.1		4	7.5	169.3	1.25	.97	.97	9	128	64	53	252	236	45
170.4	1637	5	10	170.4	1.2	.94	.94	10	129	64	53	263	240	45
171.8		6	12.5	172.0	1.15	.90	.90	10	131	64	53	267	222	46
173.1	1642	7	15	173.4	1.1	.86	.86	10	130	64	53	265	224	46
174.4		8	17.5	174.7	1.05	.82	.82	10	131	63	53	260	211	46
175.7	1647	9	20	176.0	1.25	.97	.97	10	130	62	53	258	205	46
177.1		10	22.5	177.4	1.2	.94	.94	10	130	63	53	271	200	46
178.5	1652	11	25	178.8	1.1	.86	.86	10	132	63	53	272	194	46
179.7		12	27.5	179.9	1.15	.90	.90	11	128	62	53	279	188	46
181.1	1657	-	30	181.125										

MOISTURE DETERMINATION

IMPINGER	1	2	3	4	5
Final					
Initial	100	100	0	738.7	
Difference					
Total Moisture Collected:					

SYSTEM LEAK CHECKS

Time	Rate (cfm)	Vac. (in.Hg)
1550	.009	20
		"
1657	.007	18

Impinger Catch Description:

DETERMINATION OF GAS COMPOSITION BY ORSAT ANALYSIS

Sample Id: 1-4	Replicate 1 Buret Reading	Replicate 1 Percent Volume	Replicate 2 Buret Reading	Replicate 2 Percent Volume	Replicate 3 Buret Reading	Replicate 3 Percent Volume	Average Compound	Average Percent Volume
Initial Reading							CO_2	3.0
Carbon Dioxide		See Orsat					O_2	17.0
Oxygen							CO	
Carbon Monoxide								

Total Sampling Time, min.: 100

Volume of Gas Sampled, DCF: 31.428

FORM: S-FD-5

Pl. #9448 Visible Emission Observation Form Run 1-1

SOURCE NAME	ELK RIVER BITUMINOUS
ADDRESS	
CITY	ELK RIVER
STATE	MN
ZIP	
PHONE	
SOURCE ID NUMBER	
PROCESS EQUIPMENT	Asphalt Plant
OPERATING MODE	Normal
CONTROL EQUIPMENT	Scrubber
OPERATING MODE	Normal
DESCRIBE EMISSION POINT START	30" ø circular steel stack
STOP	same
HEIGHT ABOVE GROUND LEVEL START	≈32'
STOP	same
HEIGHT RELATIVE TO OBSERVER START	≈28'
STOP	same
DISTANCE FROM OBSERVER START	≈300'
STOP	≈300'
DIRECTION FROM OBSERVER START	N
STOP	N
DESCRIBE EMISSIONS START	steam plume which varied in height + length depending on wind
STOP	same
EMISSION COLOR START	steam white/brown
STOP	same
PLUME TYPE: CONTINUOUS	X
FUGITIVE	☐
INTERMITTENT	☐
WATER DROPLETS PRESENT: NO	☐
YES	X
IF WATER DROPLET PLUME: ATTACHED	X
DETACHED	☐
POINT IN THE PLUME AT WHICH OPACITY WAS DETERMINED START	steam dissipation 100-300' downwind
STOP	same
DESCRIBE BACKGROUND START	sky/trees
STOP	sky
BACKGROUND COLOR START	gray/green
STOP	
SKY CONDITIONS START	overcast
STOP	same
WIND SPEED START	3-10
STOP	same
WIND DIRECTION START	NW
STOP	same
AMBIENT TEMP. START	47
STOP	47
WET BULB TEMP.	—
RH, percent	—

Source Layout Sketch — Draw North Arrow

Trees could be used as background when plume dipped down

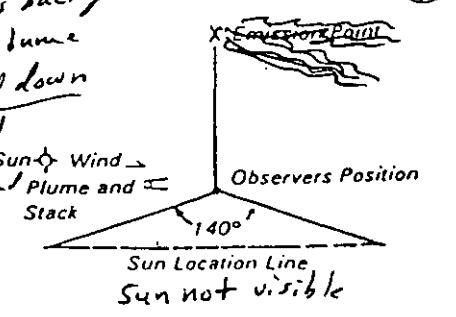

Sun not visible

plume dissipated 100-300 ft downwind and 15-150 ft above grade

OBSERVATION DATE	START TIME	STOP TIME
9/28/93	1110	1142

SEC / MIN	0	15	30	45	SEC / MIN	0	15	30	45
1	0	0	0	0	31	0	5	0	5
2	0	0	0	0	32	0	0	X	X
3	0	0	0	0	33	X	X	X	X
4	0	0	0	0	34	Particulate test aborted and plant shut down			
5	0	0	0	0	35				
6	0	0	0	0	36				
7	0	0	0	0	37				
8	0	0	0	0	38				
9	0	0	5	5	39				X
10	0	0	0	0	40		X	X	X
11	0	0	0	0	41	X	X	X	X
12	0	0	0	0	42				
13	0	0	0	0	43				
14	0	0	0	0	44				
15	0	0	0	0	45				
16	0	0	0	0	46				
17	0	0	0	0	47				
18	0	0	5	0	48				
19	5	0	5	5	49				
20	0	5	0	0	50				
21	0	0	5	0	51				
22	0	0	0	0	52				
23	0	0	0	0	53				
24	0	0	0	0	54				
25	0	0	0	0	55				
26	0	0	0	0	56				
27	0	0	0	0	57				
28	0	5	10	5	58				
29	0	5	0	0	59				
30	0	0	0	0	60				

AVERAGE OPACITY FOR HIGHEST PERIOD	NUMBER OF READINGS ABOVE % WERE
RANGE OF OPACITY READINGS MINIMUM	MAXIMUM
OBSERVER'S NAME (PRINT)	Alan L. Trowbridge
OBSERVER'S SIGNATURE	Alan L. Trowbridge
DATE	9/28/93
ORGANIZATION	MMT Environmental Services, Inc
CERTIFIED BY	ETA
DATE	4/1/93
VERIFIED BY	
DATE	

COMMENTS

I HAVE RECEIVED A COPY OF THESE OPACITY OBSERVATIONS

SIGNATURE

TITLE DATE

D.F 9448

Visible Emission Observation Form Test 1-2

SOURCE NAME	ELK RIVER BITUMINOUS
ADDRESS	
CITY	ELK RIVER
STATE	MN
ZIP	
PHONE	
SOURCE ID NUMBER	
PROCESS EQUIPMENT	Asphalt Plant
OPERATING MODE	Normal
CONTROL EQUIPMENT	Scrubber
OPERATING MODE	Normal
DESCRIBE EMISSION POINT	30" Ø
START	Steel stack
STOP	same
HEIGHT ABOVE GROUND LEVEL START	232'
HEIGHT ABOVE GROUND LEVEL STOP	Same
HEIGHT RELATIVE TO OBSERVER START	228'
HEIGHT RELATIVE TO OBSERVER STOP	Same
DISTANCE FROM OBSERVER START	≈ 300'
DISTANCE FROM OBSERVER STOP	≈ 300'
DIRECTION FROM OBSERVER START	N
DIRECTION FROM OBSERVER STOP	
DESCRIBE EMISSIONS START	Steam plume which varied in height & length dependent on wind
DESCRIBE EMISSIONS STOP	Same
EMISSION COLOR START	white steam
EMISSION COLOR STOP	gray Same
PLUME TYPE: CONTINUOUS	X
FUGITIVE	☐
INTERMITTENT	☐
WATER DROPLETS PRESENT: NO	☐
WATER DROPLETS PRESENT: YES	X
IF WATER DROPLET PLUME: ATTACHED	X
IF WATER DROPLET PLUME: DETACHED	☐
POINT IN THE PLUME AT WHICH OPACITY WAS DETERMINED START	steam dissipation 100-300' downwind
POINT IN THE PLUME AT WHICH OPACITY WAS DETERMINED STOP	same
DESCRIBE BACKGROUND START	SKY / Trees
DESCRIBE BACKGROUND STOP	sky / trees
BACKGROUND COLOR START	gray / green
BACKGROUND COLOR STOP	same
SKY CONDITIONS START	overcast
SKY CONDITIONS STOP	Same
WIND SPEED START	4-10 mph
WIND SPEED STOP	same
WIND DIRECTION START	varied to NW
WIND DIRECTION STOP	NW
AMBIENT TEMP. START	47
AMBIENT TEMP. STOP	48
WET BULB TEMP.	
RH, percent	

OBSERVATION DATE	START TIME	STOP TIME
9/28/93	1220	1320

MIN \ SEC	0	15	30	45	MIN \ SEC	0	15	30	45
1	0	0	0	0	31	0	0	15	5
2	0	5	0	5	32	5	0	5	10
3	0	0	0	0	33	10	5	5	10
4	5	0	5	5	34	5	5	0	0
5	0	5	5	10	35	0	0	5	10
6	0	0	0	0	36	0	0	0	5
7	0	0	0	0	37	5	0	5	0
8	0	0	0	0	38	0	0	0	0
9	0	0	0	0	39	0	0	0	0
10	0	0	0	0	40	0	0	0	0
11	0	0	0	0	41	0	5	0	5
12	0	0	0	0	42	5	15	5	10
13	0	5	10	10	43	5	5	5	0
14	5	0	5	5	44	0	0	20	5
15	5	5	15	10	45	15	5	0	0
16	0	0	5	5	46	5	10	15	5
17	0	0	0	0	47	0	5	10	0
18	0	0	0	0	48	10	5	5	0
19	0	0	0	0	49	0	0	0	10
20	0	0	0	5	50	5	0	0	0
21	15	0	0	0	51	0	0	0	0
22	0	0	0	0	52	0	0	0	0
23	0	5	0	0	53	0	0	0	5
24	10	5	5	5	54	10	0	0	0
25	5	5	15	15	55	0	0	0	0
26	10	10	5	0	56	5	0	0	0
27	0	10	5	5	57	0	0	10	0
28	10	5	0	15	58	5	5	5	0
29	5	0	15	10	59	0	0	5	10
30	0	0	5	5	60	0	5	0	0

AVERAGE OPACITY FOR HIGHEST PERIOD

NUMBER OF READINGS ABOVE % WERE

RANGE OF OPACITY READINGS MINIMUM 0% MAXIMUM 20%

OBSERVER'S NAME (PRINT) Alan L. Trowbridge

OBSERVER'S SIGNATURE Allan L. Trowbridge DATE 9/28/93

ORGANIZATION MMT Environmental Services Inc.

CERTIFIED BY ETA DATE 4/1/93

VERIFIED BY DATE

Source Layout Sketch — Draw North Arrow

wind varied NW to W

Trees could be used as background when plume dipped down

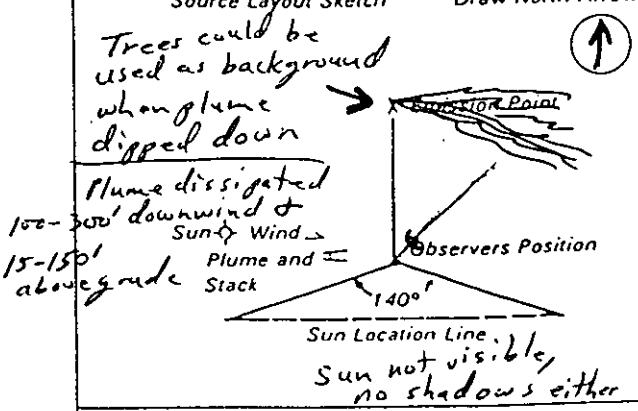

Sun not visible, no shadows either

COMMENTS

Readings with gray sky as background were all 0%.

Readings with tree background ranged 0-20%

I HAVE RECEIVED A COPY OF THESE OPACITY OBSERVATIONS

SIGNATURE

TITLE DATE

CYCLONIC FLOW DETERMINATION

MMT JOB NUMBER 9448 DATE Wed 11.10.93

COMPANY Elk River Bituminous

SOURCE Scrubber Outlet

STACK DIMENSION, IN 30" Ø TEST TEAM BA-TG

TIME 1028 STATIC PRESSURE +.42

Degrees Rotation to achieve Null Vp

TRAVERSE POINT #	INCHES FROM WALL				
1	1.0		12	6	
2	2.0		11	5	
3	3.5		13	5	
4	5.3		10	6	
5	7.5		7	4	
6	10.7		6	5	
7	19.4		-0	12	
8	22.5		-1	15	
9	24.7		-4	-4	
10	26.5		-3	-3	
11	28.0		-9	-2	
12	29.0		-10	0	
					6.38

Absolute AVERAGE ANGLE

AVERAGE OF ANGLE MUST BE < 20 TO BE ACCEPTABLE.

APPENDIX C: LABORATORY REPORTS

SUMMARY OF PARTICULATE EMISSION TEST LABORATORY DATA

PROJECT NUMBER: 9448 COMPANY: ELK RIVER BITUMINOUS
TEST NUMBER: 1 SOURCE: SCRUBBER OUTLET

	MASS OF PARTICULATE MATTER COLLECTED, GRAMS							
	FRONT CATCH				BACK CATCH			TOTAL PARTICULATE MASS COLLECTED
RUN NUMBER	FRONT WASH	CYCLONE CATCH	FILTER CATCH	FRONT TOTAL	IMPINGER CATCH **	IMPINGER WASH	BACK TOTAL	
1	0.1745	0.0000	0.1137	0.2882	0.0029	0.0128	0.0157	0.3039
2	0.2626	0.0000	0.0820	0.3446	0.0012	0.0059	0.0071	0.3517
3	0.3014	0.0000	0.0873	0.3887	0.0015	0.0036	0.0051	0.3938

* NOT APPLICABLE

** CHLOROFORM/ETHYL ETHER EXTRACTION

LABORATORY REPORT: EPA Method 5

Project Number: 9448 Company: Elk River Bituminous 9.28.93

Frontwashes 300 ml				
Test-Run	1-2	1-3	1-4	Date
Dish #	677	680	683	-----
1	2.4882	2.5227	2.6224	10-4-93
2	2.4879	2.5229	2.6224	10-4-93
3	2.4880	2.5230	2.6221	10-5-93
Tare	2.3134	2.2601	2.3207	4.23.93
Blank	.0000	.0000	.0000	-----
Net	.1745	.2626	.3014	-----

Solvent Blanks				
Solvents	300 ml Acetone	Chloroform 150 ml	150 ml Ether	~~H_2O~~
Dish #	674	675	676	
1	2.3395	2.3177	2.2939	
2	2.3393	2.3180	2.2940	
3	2.3396	2.3179	2.2941	
Tare	2.3393	2.3177	2.2939	
Net	.0000	.0000	.0000	

Backwashes 300 ml				
Test-Run	1-2	1-3	1-4	Date
Dish #	678	681	684	-----
1	2.2980	2.2671	2.2448	10.4.93
2	2.2984	2.2669	2.2449	10.4.93
3	2.2983	2.2670	2.2450	10.5.93
Tare	2.2852	2.2610	2.2412	4.23.93
Blank	.0000	.0000	.0000	-----
Net	.0128	.0059	.0036	-----

Glass Filters				
Test-Run	1-2	1-3	1-4	Date
Filter #	8762	8763	8764	-----
1	.6311	.6020	.6092	10.4.93
2	.6310	.6017	.6094	10.4.93
3	.6312	.6020	.6095	10.5.93
Tare	.5173	.5197	.5219	2.15.93
Net	.1137	.0820	.0873	-----

Extractions 150 ml of Chloroform + 150 ml Ether				
Test-Run	1-2	1-3	1-4	Date
Dish #	679	682	685	-----
1	2.3436	2.2656	2.3514	10.4.93
2	2.3440	2.2656	2.3514	10.4.93
3	2.3437	2.2657	2.3516	10.5.93
Tare	2.3407	2.2644	2.3499	4.23.93
Blank	.0000	.0000	.0000	-----
Net	.0029	.0012	.0015	-----

Impinger Liquid				
Test-Run	1-1 Not	Applied	1-3	Date
Dish #				-----
1				
2				
3				
Tare				-----
Blank				-----
Net				-----

Signature Ted Gibbons Date 10-5-93

Laboratory Report: Moisture Content of Aggregate Samples

Project Number 9448 Company Elk River Bituminous 9-28-93

Test 1-2

Trial #	1	2	3	Date
Dish #	686	687	688	
Tare	2.2497	2.2525	2.2797	4.23.93
Tare + Wet	45.6524	45.8648	45.5300	10.4.93
Wet	43.4027	43.6123	43.2503	
Dry	41.6994	41.7096	41.6196	
Dry + Tare	43.9491	43.9621	43.8993	10.4.93
% Moisture	3.92	4.36	3.77	

Test 1-3

Trial #	1	2	3	Date
Dish #	689	690	691	
Tare	2.2581	2.3197	2.3084	4.23.93
Tare + Wet	45.7373	45.8498	46.1947	10.4.93
Wet	43.4792	43.5301	43.8863	
Dry	41.7299	41.5798	42.0756	
Dry + Tare	43.9880	43.8995	44.3840	10.4.93
% Moisture	4.02	4.48	4.13	

Test 1-4

Trial #	1	2	3	Date
Dish #	692	693	694	
Tare	2.3200	2.2728	2.3257	4.23.93
Tare + Wet	45.5200	46.0287	45.2730	10.4.93
Wet	43.2000	43.7559	42.9473	
Dry	41.5151	42.1295	41.4144	
Dry + Tare	43.8351	44.4023	43.7401	10.4.93
% Moisture	3.90	3.72	3.57	

Summary

	Mean	σn-1 Deviation	% Error
Test 1-2	4.02	.31	7.6
1-3	4.21	.24	5.7
1-4	3.73	.17	4.4
n=9 overall	3.99	.30	7.5
	% Moisture	Sample std deviation	

Comments

$\frac{\text{Dry}}{\text{Wet}}$ * 100 = % Solids

100- % Solids = % Moisture

Signature Ted Gibbons Date 10-4-93

ORSAT ANALYSIS

Job Number: 9448 Company: Elk River Bituminous

SAMPLE DESCRIPTION	SAMPLE ANALYSIS							
Scrubber Outlet		Replicate 1		Replicate 2		Replicate 3		
	Parameter Measured	Buret Reading	Percent Volume	Buret Reading	Percent Volume	Buret Reading	Percent Volume	
Sample Id: 1-2								X
Collected By: Ramp - Integrated	Initial Reading	0.0	0.0	0.0	0.0	0.0	0.0	
Date Collected: 9.28.93	Carbon Dioxide	2.7	2.7	2.7	2.7	2.7	2.7	2.7
Analyzed By: Ted	Oxygen	20.2	17.5	20.2	17.5	20.2	17.5	17.5
Date Analyzed: 9.28.93	Carbon Monoxide	Not Analyzed		—	—	—	—	= 1.21
Sample Id: 1-3								
Collected By: Ramp	Initial Reading	0.0	0.0	0.0	0.0	0.0	0.0	
Date Collected: 9.28.93	Carbon Dioxide	3.0	3.0	3.0	3.0	3.0	3.0	3.0
Analyzed By: Ted	Oxygen	20.0	17.0	20.0	17.0	20.1	17.1	17.0
Date Analyzed: 9-28-93	Carbon Monoxide	NA	—	—	—	—	—	1.30
Sample Id: 1-4								
Collected By: Ramp	Initial Reading	0.0	0.0	0.0	0.0	0.0	0.0	
Dated Collected: 9.28.93	Carbon Dioxide	3.0	3.0	3.0	3.0	3.0	3.0	3.0
Analyzed By: Ted	Oxygen	20.0	17.0	20.0	17.0	20.0	17.0	17.0
Date Analyzed: 9.28.93	Carbon Monoxide	NA	—	—	—	—	—	1.3

Fuel is F_o range is 1.21 - 1.37

FORM S-LB-3

1-2 R1 * had to reduce ml H2O
1-3 R2 Lab data ok
1-4 R3 Lab data ok

PROJECT # 9448 COMPANY Elk River Bit.
TEST DATE(s) 9-28-93 SOURCE Scrubber Outlet

EPA METHOD 4 LABORATORY REPORT

Filter #

Used residual Fuel Oil as fuel

TEST-RUN #	IMPINGER #	INITIAL	FINAL	GAIN	DESCRIPTION
	1	100			
	2	100			
	3	0			
	4				
	5				
	TOTAL MOISTURE GAIN, ML =				

8762 1-1 Scrubbed

TEST-RUN #					
	1	100	214	114	
	2	100	100	0	
	3	0	0	0	
	4	739.9	746.3	6.4	
	5				
	TOTAL MOISTURE GAIN, ML =			120.4	

8763 1-3 Clear Max possible 125.0 [redacted]

TEST-RUN #					
	1	100	180	80	
	2	100	125	25	
	3	0	5	5	
	4	738.7	750.9	12.2	
	5				
	TOTAL MOISTURE GAIN, ML =			122.2 ok	

8764 1-4 Clear Max possible 122.9 [redacted]

Cyclone check measure Port down to 1/2"

(For 1.21 - 1.37 Res. oil)

Test Notes

tighten MS imp. cord strap

		I	F	Gain	Description
8762 1-2	1	100	185	85	Clear
	2	100	123	23	
	3	0	2	2	
	4	701.9	710.0	8.1	
	Total ml =			118.1 ok	

Max possible 112.15 [redacted]

COMMERCIAL TESTING & ENGINEERING CO.
GENERAL OFFICES: 1919 SOUTH HIGHLAND AVE., SUITE 210-B, LOMBARD, ILLINOIS 60148 • TEL: 708-953-9300 FAX: 708-953-9306
SINCE 1908
Member of the SGS Group (Société Générale de Surveillance)

PLEASE ADDRESS ALL CORRESPONDENCE TO:
16130 VAN DRUNEN RD., P.O. BOX 127
SOUTH HOLLAND, IL 60473
TEL: (708) 331-2900
FAX: (708) 333-3060

October 27, 1993

MMT ENVIRONMENTAL SERVS, INC.
4610 N. Churchill Street
St. Paul, MN 55126
ATTN: Alan TrowBridge

Sample identification by
MMT Environmental Servs, Inc.

Kind of sample reported to us	Waste Oil	Used Waste Oil - Composite
Sample taken at	Elk River Bituminous	Elk River Bituminous Date Sampled 9/28/93
Sample taken by	Elk River Bituminous	
Date sampled	September 28, 1993	P.O. No. 8340
Date received	October 15, 1993	

Analysis Report No. 71-63687

	As Received
GRAVITY	
Specific at 60/60°F	0.8888
Lb/gallon at 60°F	7.401
°API	27.7
HEATING VALUE	
Btu/lb	18,531
Btu/gal at 60°F	137,148
ASH, % Wt.	0.66
SULFUR, % Wt.	0.48
WATER, % Wt.	3.80
TOTAL HALOGENS, ppm	330
ACIDITY, mgKOH/g	1.53
LEAD, ug/g	142

METHODS
Gravity: ASTM D 287
Heating Value: ASTM D 240
Ash: ASTM D 482
Sulfur: ASTM D 1552
Water: ASTM D 95
Total Halogens: ASTM D 808
Acidity: ASTM D 664
Lead: ASTM D 3683

Respectfully submitted,
COMMERCIAL TESTING & ENGINEERING CO.

Manager, South Holland Laboratory

Original Watermarked For Your Protection
TERMS AND CONDITIONS ON REVERSE

COMMERCIAL TESTING & ENGINEERING CO.
GENERAL OFFICES: 1919 SOUTH HIGHLAND AVE., SUITE 210-B, LOMBARD, ILLINOIS 60148 • TEL: 708-953-9300 FAX: 708-953-9306
SINCE 1908
Member of the SGS Group (Société Générale de Surveillance)

PLEASE ADDRESS ALL CORRESPONDENCE TO:
16130 VAN DRUNEN RD., P.O. BOX 127
SOUTH HOLLAND, IL 60473
TEL: (708) 331-2900
FAX: (708) 333-3060

October 27, 1993

MMT ENVIRONMENTAL SERVS, INC.
4610 N. Churchill Street
St. Paul, MN 55126
ATTN: Alan TrowBridge

Sample identification by
MMT Environmental Servs, Inc.

Kind of sample reported to us	Waste Oil	Used Waste Oil - Composite Elk River Bituminous
Sample taken at	Elk River Bituminous	Date Sampled 9/28/93
Sample taken by	Elk River Bituminous	
Date sampled	September 28, 1993	P.O. No. 8340
Date received	October 15, 1993	

Analysis Report No. 71-63687

POLYCHORINATED BIPHENYLS (PCB's)

PARAMETER	RESULTS	MDL	METHOD
PCB, ug/g	ND	1.0	SW8080

ND: Non detected

Respectfully submitted,
COMMERCIAL TESTING & ENGINEERING CO.

Manager, South Holland Laboratory

OVER 40 BRANCH LABORATORIES STRATEGICALLY LOCATED IN PRINCIPAL COAL MINING AREAS, TIDEWATER AND GREAT LAKES PORTS, AND RIVER LOADING FACILITIES
Original Watermarked For Your Protection
TERMS AND CONDITIONS ON REVERSE

APPENDIX D: CALIBRATION DATA

VISIBLE EMISSIONS EVALUATOR

This is to certify that

Alan Ikenbridge

met the specifications of Federal Reference Method 9 and qualified as a visible emissions evaluator. Maximum deviation on white and black smoke did not exceed 7.5% opacity and no single error exceeding 15% opacity was incurred during the certification test conducted by Eastern Technical Associates of Raleigh, North Carolina. This certificate is valid for six months from date of issue.

Thomas [illegible]
President

238375
Certificate Number

[illegible]
Vice President

Minneapolis
Location

David B. Savage, Jr.
Program Manager

April 1, 1993
Date of Issue

© DOES 445

LITHO-IN U.S.A.

CALIBRATION
DRY TEST METER/ORIFICE METER

Wednesday

Date: 9.29.93 Barometric Pressure, in. Hg. (Pb): 28.91

EQUIPMENT IDENTIFICATION			
Control Unit 4	Dry Test Meter	Wet Test Meter	Calibration Type
Mfg: Andersen	Mfg: rockwell	Mfg: GCA Corporation	General: x
Model: Universal	Model: S-175	Model: Precision	Post-test: x
SN: 591-544	SN: 83	SN: 11 AH 12	

EQUIPMENT CALIBRATION											
Orifice Pressure Drop in. WC H	Pump Vac. in.Hg	Wet Test Meter			Dry Test Meter						Elapsed Time, min. Q
		Volume, CF		Temp. °F T_w	Volume, CF		Temperature, °F				
							Inlet		Outlet		
		Initial V_{wi}	Final V_{wf}		Initial V_{di}	Final V_{df}	Initial T_{ii}	Final T_{if}	Initial T_{oi}	Final T_{of}	
0.5	0	2.410	3.436	72	182.762	186.055	50	45	62	58	8
1.0	0	3.436	9.910	72	186.055	192.408	54	62	73	60	11
2.0	0	9.910	17.997	72	192.408	200.468	61	72	81	65	10
3.0	0	17.997	23.878	72	200.468	206.361	64	78	85	67	6

COMPUTER PRINTOUT

Elk River Post-Test

H	Vw	Tw	Vd	Td	Q	C	Hø
0.5	3.436	72	3.293	52.8	8.0	1.0044	1.6405
1.0	6.474	72	6.353	62.3	11.0	0.9978	1.7155
2.0	8.087	72	8.060	69.8	10.0	0.9941	1.7915
3.0	5.881	72	5.893	73.5	6.0	0.9932	1.8164

AVERAGE CORRECTION FACTOR: C = 0.9974
AVERAGE ORIFICE CONSTANT: Hø = 1.7410

EQUATIONS:

```
Vw = Vwf - Vwi
Vd = Vdf - Vdi
Td = ( Tii + Tif + Toi + Tof ) / 4
C = Vw * Pb * (Td+460) / ( Vd * (Pb+H/13.6) * (Tw+460) )
Hø = 0.0317 * H * ((Tw+460)*Q/Vw)^2 / ( Pb * (Td+460) )
```

$\bar{X}$ C = 1.0052

Calibration Performed by:

(Print) Ted Gibbons

(Signature)

Thursday

CALIBRATION
DRY TEST METER/ORIFICE METER

Page: SSQA-1- 49

Date: 9-23-93 Barometric Pressure, in. Hg. (Pb): 28.88

EQUIPMENT IDENTIFICATION			
Control Unit 4	Dry Test Meter	Wet Test Meter	Calibration Type
Mfg: Andersen	Mfg: rockwell	Mfg: GCA Corporation	General: x
Model: Universal	Model: S-175	Model: Precision	Post-test: x
SN: 591-544	SN: 83	SN: 11 AH 12	

EQUIPMENT CALIBRATION											
Orifice Pressure Drop in. WC H	Pump Vac. in.Hg	Wet Test Meter			Dry Test Meter						Elapsed Time, min. Q
		Volume, CF		Temp. °F Tw	Volume, CF		Temperature, °F				
							Inlet		Outlet		
		Initial Vwi	Final Vwf		Initial Vdi	Final Vdf	Initial Tii	Final Tif	Initial Toi	Final Tof	
0.5	8	zero	5.935	73	990.412	996.265	67	69	67	75	14
1.0	8	5.935	14.022	73	996.265	1004.327	74	69	71	83	14
2.0	0	14.022	20.422	73	4.327	10.657	80	71	72	88	8
3.0	0	20.422	32.943	73	10.657	~~22~~ 22.934	86	72	74	93	13

COMPUTER PRINTOUT

Elk River Pre-Test

H	Vw	Tw	Vd	Td	Q	C	Hø
0.5	5.935	73	5.853	69.5	14.0	1.0061	1.6385
1.0	8.087	73	8.062	74.3	14.0	1.0029	1.7493
2.0	6.400	73	6.330	77.8	8.0	1.0149	1.8121
3.0	12.521	73	12.277	81.3	13.0	1.0278	1.8632

AVERAGE CORRECTION FACTOR: C = 1.0129
AVERAGE ORIFICE CONSTANT: Hø = 1.7657

EQUATIONS:

```
Vw = Vwf - Vwi
Vd = Vdf - Vdi
Td = ( Tii + Tif + Toi + Tof ) / 4
C = Vw * Pb * (Td+460) / ( Vd * (Pb+H/13.6) * (Tw+460) )
Hø = 0.0317 * H * ((Tw+460)*Q/Vw)^2  / ( Pb * (Td+460) )
```

Calibration Performed by:

(Print) [illegible signature]

CALIBRATION

S-TYPE PITOT TUBE Probe ID 45" S.S. Prob.

Probe sheath ID: 42

Date: 4.5.93

S-Type Pitot Tube ID No.: 41 inches

Ambient Temperature, °F: 66

Standard Pitot Tube ID No.: 18 inches

Barometric Pressure, in. Hg.: 29.18

Standard Pitot Tube Coefficient: 0.995

PITOT TUBE EXAMINATION		
Alignment Check	Pitot Tube Dimensions	Pitot Assembly Intercomponent Spacings
✓ $\alpha 1 < 10°$	External tubing diameter (D_t): 3/8	Pitot to ~~probe~~ nozzle (X):
✓ $\alpha 2 < 10°$	Base to Side A opening plane (P_A): .442	Pitot to ~~probe sheath~~ (Y):
✓ $\beta 1 < 5°$	Base to Side B opening plane (P_B): .440	Pitot to ~~thermocouple~~, along probe (W): Area
✓ $\beta 2 < 5°$		Pitot to ~~thermocouple~~, perpendicular to probe (Z): Applicable
✓ Q<1/8 in.		
✓ R<1/32 in.		

DESIRED CALIBRATION POINT		SIDE A CALIBRATION		SIDE B CALIBRATION	
Velocity ft/sec	P_{std} in. WC	P_{std} in. WC	P_s in. WC	P_{std} in. WC	P_s in. WC
20	0.09	.13	.18	.125	.175
40	0.37	.37	.52	.32	.445
60	0.82	.81	1.14	.79	1.10
80	1.45	1.35	1.9	1.45	2.04
100	2.30				

COMPUTER PRINTOUT

SIDE A CALIBRATION				SIDE B CALIBRATION			
Pstd	Ps	Cp	Cp-Cp(A)	Pstd	Ps	Cp	Cp-Cp(B)
0.130	0.180	0.846	0.005	0.125	0.175	0.841	-0.001
0.370	0.520	0.839	-0.001	0.320	0.445	0.844	0.002
0.810	1.140	0.839	-0.002	0.790	1.100	0.843	0.002
1.350	1.900	0.839	-0.002	1.450	2.040	0.839	-0.003
Cp(A) = 0.841				Cp(B) = 0.842			

Side A σ_n = .003

Side B σ_n = .002

Calibration Performed by:

(Print) Bill + Ted

(Signature) Bill - Ted

CALIBRATION

NOZZLE DIAMETER

S = short

Nozzle Number	Nominal Diameter, in.	Measured Diameter, in. D1	D2	D3	Nozzle* Diameter, in.
–	–	–	–	–	–
S-1		.745	.745	.744	0.745
S-2		.301	.296	.297	0.298
S-3		.374	.375	.370	0.373
S-4		.500	.498	.501	0.500
S-5		.366	.365	.369	0.367
S-6		.367	.367	.363	0.366
S-7	* Nozzle Employed	.185	.183	.184	0.184
S-8		.245	.244	.242	0.244
2		.123	.120	.121	0.121
4		.178	.179	.181	0.179
13		.306	.311	.308	0.308
14		.314	.312	.312	0.313
17		.365	.366	.367	0.366
18		.429	.432	.434	0.432
19		.488	.486	.493	0.489

* Nozzle diameter = (D1 + D2 + D3)/3

Calibration Performed by:

(Print) Ted Gibbons

(Signature) Ted Gibbons

Date: 3.29.93

CALIBRATION

THERMOCOUPLE/TEMPERATURE METER

EQUIPMENT IDENTIFICATION	
THERMOCOUPLE	TEMPERATURE METER
MMT ID No.: 36" Std Inflex +15' Flexible	MMT ID No.: –
Mfg: Omega	Mfg: Newport Laboratories
Type: Chromel - Alumel	Model: 268-KF1
Length: 51 inches overall	SN: 747-4363
Length of connecting (extension) wire: 20 ft	

Stack Temp thermocouple

EQUIPMENT CALIBRATION		
Reference temperature by mercury-in-glass thermometer, °F T_a	Temperature indicated by thermocouple and temperature meter, °F T_i	Deviation, °F $T_i - T_a$
39	41	2
68	69	1
176	175	-1
276	276	0
374	375	1

Calibration Performed by:

(Print) Bill + Ted

(Signature) Bill - Ted

Date: 4.6.93

CALIBRATION

THERMOCOUPLE/TEMPERATURE METER

EQUIPMENT IDENTIFICATION	
THERMOCOUPLE	TEMPERATURE METER
MMT ID No.: 18" Std Flexible	MMT ID No.: - - - -
Mfg: Omega	Mfg: Newport Laboratories
Type: Chromel - Alumel	Model: 268 - KF1
Length: 1.5 Feet	SN: 747 - 4363
Length of connecting (extension) wire: 20 feet	

* Probe Thermocouple on 45" S.S, probe.

EQUIPMENT CALIBRATION		
Reference temperature by mercury-in-glass thermometer, °F T_a	Temperature indicated by thermocouple and temperature meter, °F T_i	Deviation, °F $T_i - T_a$
38	39	1
70	71	1
132	131	-1
212	210	-2
319	317	-2
407	408	1

Calibration Performed by:

(Print) Ted Gibbons

(Signature) Ted Gibbons

Date: 4.6.93

FORM: SSQA-4

CALIBRATION

THERMOCOUPLE/TEMPERATURE METER

Last Impinger - Dial	EQUIPMENT IDENTIFICATION
THERMOCOUPLE	TEMPERATURE METER
MMT ID No.: Dial Thermometer	MMT ID No.: —
Mfg: Premium Instruments	Mfg: Newport Laboratories
Type: Dial	Model: 268-KF1
Length: 4 inches	SN: 747-4363
Length of connecting (extension) wire: 20 ft.	

EQUIPMENT CALIBRATION		
Reference temperature by mercury-in-glass thermometer, °F T_a	Temperature indicated by thermocouple and temperature meter, °F T_i	Deviation, °F $T_i - T_a$
40	42	2
67	66	-1
101	100	-1
127	129	2

Calibration Performed by:

(Print) Bill + Ted

(Signature) Bill + Ted

Date: 4.6.93

CALIBRATION

THERMOCOUPLE/TEMPERATURE METER

EQUIPMENT IDENTIFICATION	
THERMOCOUPLE	TEMPERATURE METER
MMT ID No.: Andersen #4 Meter Inlet	MMT ID No.: -
Mfg: Omega	Mfg: Newport Laboratories
Type: Chromel - Alumel	Model: 268 - KF1
Length: 5 inches	SN: 747 - 4363
Length of connecting (extension) wire: 20 ft.	

EQUIPMENT CALIBRATION		
Reference temperature by mercury-in-glass thermometer, °F T_a	Temperature indicated by thermocouple and temperature meter, °F T_i	Deviation, °F $T_i - T_a$
40	40	0
66	65	-1
101	102	1
129	130	1

Calibration Performed by:

(Print) Bill + Ted

(Signature) Bill - Ted

Date: 4.6.93

CALIBRATION

THERMOCOUPLE/TEMPERATURE METER

EQUIPMENT IDENTIFICATION	
THERMOCOUPLE	TEMPERATURE METER
MMT ID No.: Andersen #4 Meter outlet	MMT ID No.: –
Mfg: Omega	Mfg: Newport Laboratories
Type: Chromel - Alumel	Model: 268-KF1
Length: 4 inches	SN: 747-4363
Length of connecting (extension) wire: 20 ft.	

EQUIPMENT CALIBRATION		
Reference temperature by mercury-in-glass thermometer, °F T_a	Temperature indicated by thermocouple and temperature meter, °F T_i	Deviation, °F $T_i - T_a$
40	39	-1
66	68	2
101	103	2
128	131	3

Calibration Performed by:

(Print) Bill + Ted

(Signature) Bill Ted

Date: 4.6.93

APPENDIX E: PROCESS DATA

Asphalt Plant Operating Conditions During Stack Testing

Rev/YH/93

Test Date(s) _____

Plant Mfr. & Model Elk River Bituminous 9-2893

Type (circle one): Drum Mix (Conventional)
Other (list): _____

Pollution Control Equipment: Baghouse Venturi Scrubber (wet scrubber) _ cyclone multiclone
(circle one)

If wet scrubbing: 100 % scrubber water recycled

List model: _____

Normal pressure drop across control equipment: _____ inches water

Air flow through control equipment: _____ acfm at _____ F

Was control equipment operating normally during testing? _____

Date & procedures of last maintenance/cleaning of control equipment _____

Fuel:

Itemize all fuels and materials added to the combustion process during the test period. List fuel type used during testing (if oil, specify grade) _____. If other units of measure are used, specify and calculate appropriate heat input.

Test No.___	Fuel Input (Gal/hr)	BTU/GAL (as received)	Heat Input (BTU/HR)	%Moisture (as received in aggregate) Virgin	recycle	combined
Run 1						
Run 2						
Run 3						

Is the above fuel substantially the highest sulfur containing fuel normally burned? _____

Production specific fuel usage: (circle one) measured or calculated: _____ cubic foot/ ton hot mix
_____ gal/ton hot mix

No. of Burners: _____ Burner(s) rating: _____ MMBTU/HR = 100% setting

Operation:

time 15 min. intervals	burner setting %	aggregate tons per ~~hour~~ load	recycle tons per hour	asphalt ~~tons~~ per hour # load	Drum Mix temp. F	dust collector pressure drop inches water	scrubber water flow rate gpm	Other (list)
1:02								
				~~[illegible]~~				
				~~[illegible]~~				
11:12		12.5		1504.8	300°	Run 1-1		
11:23		12.5		1504.8	300°			
11:39		13.6		1641.6	320°			
12:24		13.6		1641.6	300°			
12:23		13.6		1641.6	300°	Run 1-2		
12:34								
start 12:37	out 12:45	13.6		1641.6	300°			
start 12:52	finish 1:00	13.6		1641.6	310°			
start 1:07	finish 1:16	12.5		1504.8	310°			
1:20	1:25	5.0		~~[illegible]~~	300°			
62 min		58.3 tons		547.2	304°			
		56.42 tons/hr		6477 lbs 3.49 tons	3.38 tons/hr			

Plant Operator's Certification: I certify that the information submitted herein is accurate and correct and that no information requested was withheld from the Division Manager.

By: Bill McKearn, Phone: (612) 80 Ton 441-3850

Position: Plant operator

Note: All information required must be completed and submitted as part of the performance test. Failure to submit the required information will result in an incomplete performance test report.

Asphalt Plant Operating Conditions During Stack Testing

Rev/YH/93

Test Date(s) 9-28-93

Plant Mfr. & Model ELK River Bituminous

Type (circle one): Drum Mix Conventional

Other (list): _____

Pollution Control Equipment: Baghouse Venturi Scrubber wet scrubber cyclone multiclone
(circle one)

If wet scrubbing: ____% scrubber water recycled

List model: _____

Normal pressure drop across control equipment: _____ inches water

Air flow through control equipment: _____ acfm at _____ F

Was control equipment operating normally during testing? _____

Date & procedures of last maintenance/cleaning of control equipment _____

Fuel:

Itemize all fuels and materials added to the combustion process during the test period. List fuel type used during testing (if oil, specify grade) _____. If other units of measure are used, specify and calculate appropriate heat input.

Test No.___	Fuel Input (Gal/hr)	BTU/GAL (as received)	Heat Input (BTU/HR)	%Moisture (as received in aggregate) Virgin	recycle	combined
Run 1						
Run 2			Run 1-3			
Run 3		Test				

Is the above fuel substantially the highest sulfur containing fuel normally burned? _____

Production specific fuel usage: (circle one) measured or calculated: _____ cubic foot/ ton hot mix

_____ gal/ton hot mix

No. of Burners: _____ Burner(s) rating: _____ MMBTU/HR = 100% setting

Operation:

time 15 min. intervals	burner setting	aggregate tons per load	recycle tons per hour	asphalt lb/load	Drum Mix temp. F	dust collector pressure drop inches water	scrubber water flow rate gpm	Other (list)
2:10	2:17	16.54		900.6	300°	3.5	75	
2:20	2:31	13.6		1641.6	310°			
2:34	2:45	13.6		1641.6	300°	3.	72	
2:46	2:56	13.6		1641.6	300°	3.5	70	
2:58	3:09	13.6		1641.6	295°			
3:11	3:23	13.6		1641.6	300°	3.	70	
73 minutes		74.8 tons total		9108.6 lbs 4.55 tons				
						80 ton		
		61.51 tons/hr		3.74 tons/hr	301	3.3	72	

Run 1-3

Plant Operator's Certification: I certify that the information submitted herein is accurate and correct and that no information requested was withheld from the Division Manager.

By: Bill McKeans, Phone: (606) 441-3850

Position: Plant operator

Note: All information required must be completed and submitted as part of the performance test. Failure to submit the required information will result in an incomplete performance test report.

Asphalt Plant Operating Conditions During Stack Testing

Rev/YH/93

Test Date(s) 9-28-93

Plant Mfr. & Model Elk River Bituminous

Type (circle one): Drum Mix Conventional

Other (list): _____

Pollution Control Equipment: Baghouse Venturi Scrubber wet scrubber cyclone multiclone

(circle one)

If wet scrubbing: ____% scrubber water recycled

List model: _____

Normal pressure drop across control equipment: _____ inches water

Air flow through control equipment: _____ acfm at _____F

Was control equipment operating normally during testing? _____

Date & procedures of last maintenance/cleaning of control equipment _____

Fuel:

Itemize all fuels and materials added to the combustion process during the test period. List fuel type used during testing (if oil, specify grade) _____. If other units of measure are used, specify and calculate appropriate heat input.

Test No.___	Fuel Input (Gal/hr)	BTU/GAL (as received)	Heat Input (BTU/HR)	%Moisture (as received in aggregate) Virgin	recycle	combined
Run 1						
Run 2		Run 1-4				
Run 3						

Is the above fuel substantially the highest sulfur containing fuel normally burned? _____

Production specific fuel usage: (circle one) measured or calculated: _____ cubic foot/ ton hot mix

_____ gal/ton hot mix

No. of Burners: _____ Burner(s) rating: _____ MMBTU/HR = 100% setting

Operation:

time 15 min. intervals	burner setting %OFF	aggregate tons per ~~hour~~ Load	recycle tons per hour	asphalt tons per hour	Drum Mix temp. F.	dust collector pressure drop inches water	scrubber water flow rate gpm	Other (list)
3:57	4:06	13.6		1641.6	300°	3.5	70	
4:10	4:22	13.6		1641.6	305°			
4:24	4:45	13.6		1641.6	300°	3.0	70	
4:45	5:00	13.6		1641.6	300°	3.0	70	
63 minutes				6566 lbs				
		54.4 tons		3.28 tons				
		51.81 tons/hr		3.13 tons/hr	301	3.2		

Run 1-4

Plant Operator's Certification: I certify that the information submitted herein is accurate and correct and that no information requested was withheld from the Division Manager.

By: Bill McKean, Phone: (612) 60 Ton 441-3850

Position: Plant operator

Note: All information required must be completed and submitted as part of the performance test. Failure to submit the required information will result in an incomplete performance test report.

APPENDIX F: TEST PLAN & PROTOCOL

mmt environmental services, inc.

SOURCE EMISSION COMPLIANCE TEST
MMT TEST PLAN #9999 (DRAFT)

August 30, 1993

1) GENERAL INFORMATION

A: Client: ..... Elk River Bituminous
P.O. Box 208
Elk River, MN 55330

B: Client contact person: ..... Jerry Hicks
Phone: (612) 441-3850 Fax: (612) __-_____

C: Regulatory agency: ..... Minnesota Pollution Control Agency
Air Quality Division
520 Lafayette Road
St. Paul, MN 55155

D: Regulatory agency contact person: ..... Yolanda Hernandez
Phone: (612) 296-8374 Fax: (612) 297-7709

E: Regulatory agency file/permit number:: .....

F: Pre-test meeting: ..... Friday, September 3, 1993, 10:00 AM

G: Test plan prepared by: ..... Alan Trowbridge
MMT Environmental Services, Inc.
4610 N. Churchill Street, St. Paul, MN 55126-5892
Phone: (612) 483-9595 Fax: (612) 483-2699

2) SOURCES

This test plan is applicable to the following source located at the above facility:

Scrubber on asphalt plant aggregate drum mixer

7005.0450
0520
2010 A, B
1860
2030
2040

3) PROCESS UNIT INFORMATION

The information in this section applies to each of the sources listed in section 2.

A: Pollutants to be Quantified: ..... Particulates and opacity
B: Applicable Regulations: .....
C: Special averaging times: ..... none
D: Steady-state or batch operation: ..... Batch
E: Type of pollution control equipment: ..... scrubber
F: Reason for testing: ..... compliance demonstration
G: Is this test for initial compliance demonstration: ..... Yes
H: Is this a NSPS source ..... No
I: Testing Schedule: ..... ~~to be determined~~ 9/28/93
J: Testing Firm: ..... MMT Environmental Services, Inc.
K: Regulatory agency personnel to witness the test: ..... to be determined

4) EMISSION POINT INFORMATION

Sampling is scheduled to be performed in the 30" diameter scrubber exhaust stack. Figure 1 presents a schematic of the process and the existing sampling port location. It is anticipated that 24 sampling points (2 ports x 12 points/port) will be used.

Figure 1: Process and sampling site schematic

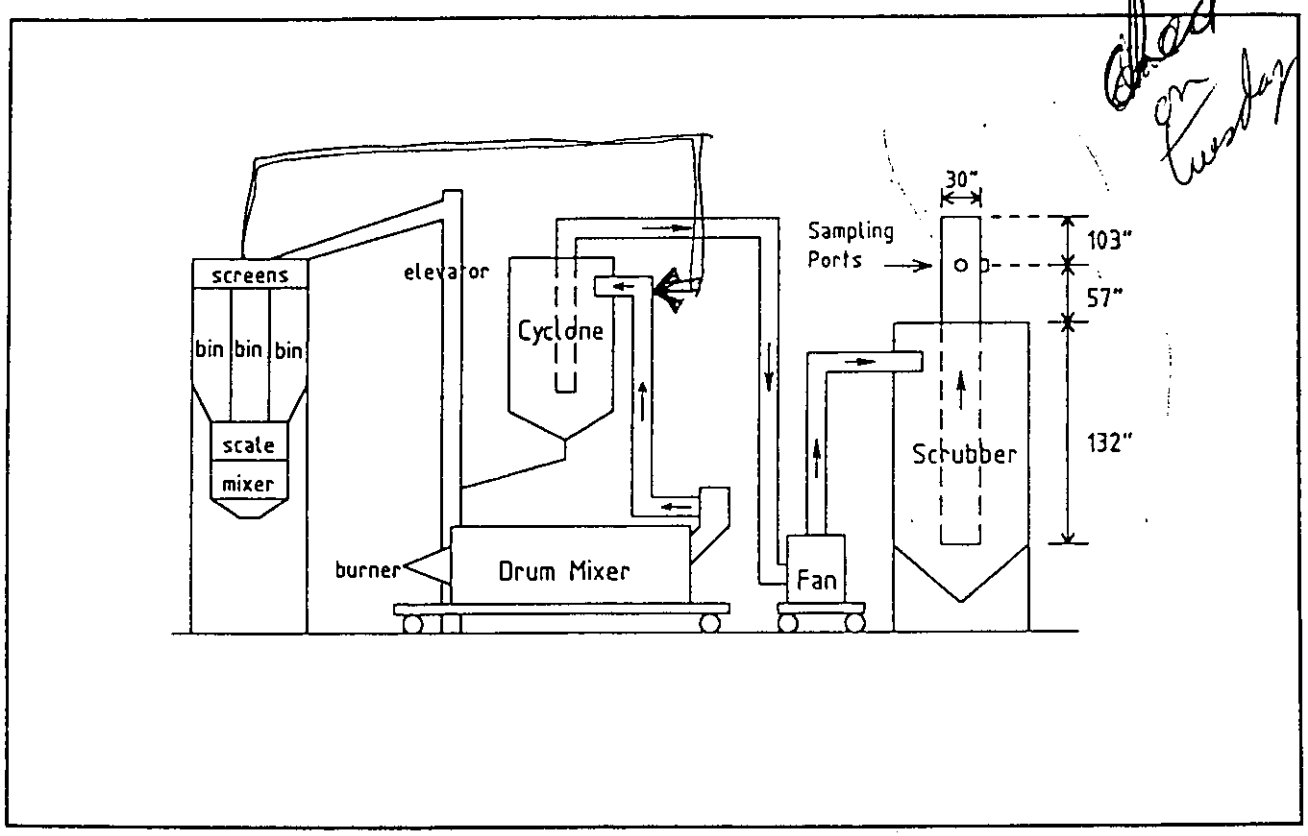

Batch Plant

Plant 2

5) **TEST PLAN (Asphalt Plant Drum Mixer with Wet Scrubber)**

A: The process equipment, pollution control equipment and all related equipment must be operated by the facilities regular operators using their normal operating procedures.

B: Process Operating Conditions Under Which Test is to be Conducted

1) Process rates;
   - Virgin aggregate, tph: 75
   - Recycled material, tph: 0
   - Asphalt, tph: .....
   - Total, tph: .....
2) Component moisture content: .....
   - Virgin aggregate, % moisture: .....
   - Recycled material, % moisture: ..... NA
3) Fuels used: ..... — was 1
4) Fuel usage rates: .....
5) Burner setting, %: .....
6) Drum mix temperature, °F: .....
7) Special conditions: .....

C: Scrubber Operating Conditions Under Which Test is to be Conducted

1) Pressure drop across scrubber: .....
2) Scrubbing solution: .....
3) Quantity of solution recycled, %: 100
4) Solution flow rate, gpm: ..... — 85 gpm
5) Solution delivery pressure, psi: ..... — 80 psi
6) Special conditions: .....

D: Operating data to be recorded during the test period

1) Operating conditions of the process being tested and its associated pollution control equipment must be documented in the test report. The data must be collected by plant personnel and must be signed/certified by a responsible party. The regulator agency may reject any test report submitted without complete documentation of the process conditions during the test period. General documentation requirements include:
   a) Record keeping of operational parameters as measured during the entire test period. For continuous recorders, provide properly labeled copies of strip charts. For discrete data, provide data taken at intervals of no greater than 15 minutes.
   b) Calculations.
   c) Certification of the data by a responsible representative of the plant.
   d) Brief explanation of how the parameters are measured. Indicate if it is a routine measurement, or a special procedure followed for purposes of the test only.
2) Specific parameters which must be documented:
   a) Process operating parameters; including those listed in paragraph 5B above.
   b) Control equipment operating parameters; including those listed in paragraph 5C above.
   c) Strip charts from any/all continuous emission monitors.
   d) Include a description of the most recent maintenance/cleaning to the process and pollution control system and note how frequently such cleaning is required. A frequency of cleaning schedule may be included as a permit condition.
3) Required regulatory agency forms form must be completed, signed and included in the test report.
   ~~a) MPCA Minnesota Exhibit C (industrial process version)~~
   b) MPCA "Asphalt Plant Operating Condition During Stack Testing" form

E: Fuel Sample Analysis

A fuel analysis may be required as part of the compliance demonstration program. If such an analysis is required, then the following procedures must be followed and the subsequent analytical results must be included in the compliance test report.

1) Fuel Sample Collection: Fuel samples are to be collected during each particulate test run. In order to be representative of the fuel burned at the time of the test, the fuel samples must be collected as close to the burner as possible. The samples should be collected per ASTM or other recognized methodologies.

2) Fuel Sample Analysis: Sample analysis must be performed per ASTM or other methodologies required by the regulatory agency. The individual fuel samples are to be combined together into a single composite sample which is to be analyzed for:
   a) Gross heating value, BTU/gal or BTU/lb
   b) Sulfur, percent by weight
   c) Ash, percent by weight
   d) Moisture content, percent by weight
   e) If fuel is used/waste oil, then analysis for the following must also be included:
      Lead, percent by weight
      Polychlorinated biphenyls (PCBs), ppm by weight
      Organic halogens, percent by weight
      Acidity, pH
   f) Other

F: Raw Material Moisture Content Determination

Aggregate and recycled material (if applicable) moisture content determinations are required as part of the compliance demonstration program. The following procedures must be followed and the subsequent analytical results must be included in the compliance test report.

1) Sampling Procedure: One composite sample is to be collected during each particulate test run. Take two samples of raw material or product during each test run. In order to be representative of the material processed during the test period, the samples must be collected as close to the process as possible. For each particulate test run, mix the two individual samples into a single composite.

2) Analysis - Each composite sample is to be analyzed for moisture content per ASTM or other recognized methodologies.