Note: This is a reference cited in *AP 42, Compilation of Air Pollutant Emission Factors, Volume I Stationary Point and Area Sources.* AP42 is located on the EPA web site at www.epa.gov/ttn/chief/ap42/

The file name refers to the reference number, the AP42 chapter and section. The file name "ref02_c01s02.pdf" would mean the reference is from AP42 chapter 1 section 2. The reference may be from a previous version of the section and no longer cited. The primary source should always be checked.

AP42 Section: **11.1**

Reference Number: **53**

Title: **Results Of The Particulate Emissions Compliance Test On The Baghouse Stack At Thorson, Inc., Roseau, Minnesota,**

Nova Environmental Services, Inc., Chaska, MN,

November 16, 1993.

F... 635A CP

Minnesota Pollution Control Agency Division of Air Quality

RESULTS OF THE PARTICULATE EMISSIONS COMPLIANCE TEST ON THE BAGHOUSE STACK AT THORSON, INC. ROSEAU, MINNESOTA NOVA PROPOSAL NO.: M93-977

November 16, 1993

Prepared for:

MR. TOM DOWNS
THORSON, INC.
4101 BEMIDJI AVENUE NORTH
BEMIDJI, MINNESOTA 56601

Prepared by:

NOVA ENVIRONMENTAL SERVICES, INC.
1107 HAZELTINE BOULEVARD, SUITE 400
CHASKA, MINNESOTA 55318
(612) 448-9393

Table of Contents

Section | Page

1.0 EXECUTIVE SUMMARY 1

2.0 INTRODUCTION 2

3.0 RESULTS 3

4.0 TEST PROCEDURES 4

5.0 PROCESS DESCRIPTION 7

List of Tables

Table

1. Results of Gas Composition and Moisture Analysis
2. Determination of Particulate Emissions
3. Visual Determination of Opacity

List of Figures

Figure

1. Test Port Location Schematic

List of Appendices

Appendix

A. Field Data
B. Laboratory Data
C. Calculation Equations and Report Nomenclature
D. Quality Assurance Data
E. Process/Source Information

1.0 EXECUTIVE SUMMARY

Nova Environmental Services, Inc. (Nova) was contracted by Thorson, Inc. to perform particulate and opacity emission testing on the Baghouse Stack (Boeing Asphalt Plant No. 1) at the Thorson, Inc. facility located in Roseau, Minnesota. The series of tests was performed on October 13, 1993. The results are summarized in the following table:

PARAMETER	RUN 1	RUN 2	RUN 3	AVERAGE
Volumetric Flow Rate				
ACFM	83,429	81,268	80,312	81,670
DSCFM	45,475	43,188	42,606	43,756
Particulate Concentration				
gr/acf	0.008	0.005	0.005	0.006
gr/dscf	0.014	0.010	0.010	0.011
Particulate Mass Rate				
lb/hr	5.427	3.787	3.589	4.268
Opacity				
Hourly average (%)				6.38
High 6-minute average (%)				10.21

2.0 INTRODUCTION

Nova personnel conducted particulate and opacity emission compliance testing on the Baghouse Stack at the Thorson, Inc. facility located in Roseau, Minnesota. On-site testing was conducted by D. Smith and T. Nelson. Testing was witnessed by John Leseman with Thorson, Inc. The testing consisted of three independent one-hour sampling for particulate with concurrent integrated gas sampling for Orsat analysis. Visual determination of opacity was also conducted.

The objectives of this project were to quantify particulate emissions and compare them to guidelines set forth in Minnesota Rules and the operating permit.

Results are summarized in the next section followed by descriptions of the test methods used and the process under investigation. All supporting data are included in the Appendices.

3.0 RESULTS

Results of gas composition and moisture analysis are found in Table 1. Results of particulate determinations are found in Table 2. The particulate emission rate averaged 4.268 lb/hr at an average concentration of 0.011 gr/dscf.

Opacity observations were recorded every 15 seconds for a one-hour time period. These results are shown in Table 3. Most of the 240 observations were in the five (5) to ten (10) percent range with a few readings of 15 percent. The average opacity for the one-hour period was 6.38 percent and the highest average for any consecutive six-minute period was 10.21 percent.

The results of fuel oil and aggregate moisture analysis are found in Appendix B.

No problems were encountered during the sampling or analysis of emission samples. After complete review of the test results, we consider the information reported to be an accurate representation of the conditions at the time of testing.

4.0 TEST PROCEDURES

Testing on the Baghouse Stack (Boeing Asphalt Plant No. 1) was performed from five (5) test ports oriented linearly, approximately 2.67 equivalent duct diameters downstream of the nearest flow disturbance and approximately 3.10 equivalent duct diameters upstream of the stack outlet. The duct dimensions were verified on-site and found to be 64x47 inches. A 25 point traverse was used to extract representative samples. Each point was sampled for three (3) minutes for a run duration of 75 minutes. Test port location is illustrated in Figure 1.

PARTICULATE DETERMINATION

Particulate testing was conducted according to EPA Methods 1-5, 40 CFR 60 Appendix A. Using traverse points determined by EPA Method 1, a preliminary velocity profile was obtained with respect to velocity traverse, gas temperature, gas pressure, and the estimated gas moisture content. From these data, sampling nozzles of the appropriate diameter to ensure isokinetic sampling were selected.

The particulate sampling train consisted of temperature controlled glass-lined sampling probe equipped with an S-type pitot tube and Type K thermocouple. The sampling probe was attached to the sampling module which contained the all-glass in line filter assembly in a temperature controlled oven. The back half of the sampling train consisted of a series of glass impingers followed by a tared desiccant-packed drying column. The sampling train was connected to an Nu-Tech control module by means of an umbilical cord. The control module houses a temperature monitored dry gas meter, a calibrated orifice, dual inclined oil manometers, temperature controllers and necessary flow rate control devices.

Particulate samples were collected by isokinetically extracting a sample gas stream by means of the sampling probe and passing the stream through the glass-fiber filter, the ice-cooled impinger assembly, and the packed drying column which collects all of the moisture remaining in the stream. The gas was then passed through a leakless sampling pump and a

dry test gas meter which integrated the sample volume throughout the testing. A calibrated orifice was connected to the gas meter outlet to facilitate sample flow rate adjustment.

Integrated gas samples were collected concurrently with the particulate samples to determine gas composition and molecular weight of the flue gas. To accomplish this, gas samples were collected in Tedlar bags throughout the duration of testing and later analyzed by chemical absorption using an Orsat gas analyzer.

Representative particulate samples were collected by sampling the centroid of equal area sections of the duct for equal time periods. The sampling rate at each point was adjusted to maintain isokinetic sampling. Pre-programmed hand-held computers were used to facilitate rapid determination of the correct sampling rate.

At the end of each particulate run, the sampling train was disassembled and the samples were recovered. The nozzle was acetone rinsed, brushed and rinsed again while the washings were collected in a labeled container. The probe was similarly cleaned, acetone rinsed and brushed and its washings were transferred to the same container. The sampling filter was transferred from the filter holder to its dedicated petri dish. The filter holder was wiped free of silicone grease, acetone rinsed, brushed and rinsed again and these washings too were added to the probe wash container. The probe wash container was capped and the liquid level was marked for transport. The impinger catch volume was determined to the nearest milliliter using a triple beam balance. The impinger catch was transferred to a separate container, capped and the liquid level marked. The desiccant-packed drying column was weighed in the field to the nearest 0.5 grams and the weight of the absorbed moisture was determined.

Particulate samples were transported to the laboratory and prepared for analysis. Filters were desiccated for 24 hours and weighted to a constant weight and the results were recorded to the nearest 0.1 mg. Probe wash samples were evaporated at ambient temperatures to dryness in tared evaporating dishes. They were then desiccated for 24 hours and weighed to a constant weight. Results were reported to the nearest 0.1 mg.

VISIBLE EMISSIONS EVALUATION

Visible emissions were evaluated in accordance with EPA Method 9, 40 CFR 60, Appendix A. After the certified observer was positioned relative to the sun and the source, opacity observations were recorded every 15 seconds. The observations were made to the nearest five percent opacity. The average hourly opacity was calculated by dividing the sum of all observations (expressed as percent) by the total number of observations that were made. The high six-minute average opacity was determined by locating the highest 24 consecutive opacity readings and calculating their average opacity.

TABLE 1

Thorson, Inc.
Roseau, Minnesota
Baghouse Stack

Nova Environmental Services, Inc.
Project No. M93-977

EPA METHOD 3 & 4 – RESULTS OF GAS COMPOSITION & MOISTURE ANALYSES

TEST NO. 1	RUN 1	RUN 2	RUN 3	AVERAGE
DATE OF TEST	13-Oct-93	13-Oct-93	13-Oct-93	
GAS COMPOSITION, DRY BASIS (ORSAT), %				
CARBON DIOXIDE	5.20	5.00	5.60	5.27
OXYGEN	14.20	15.00	13.60	14.27
CARBON MONOXIDE	NT	NT	NT	NT
NITROGEN	80.60	80.00	80.80	80.47
GAS COMPOSITION, WET BASIS (ORSAT), %				
CARBON DIOXIDE	4.05	3.78	4.22	4.02
OXYGEN	11.06	11.34	10.25	10.88
CARBON MONOXIDE	NT	NT	NT	NT
NITROGEN	62.79	60.50	60.87	61.39
WATER VAPOR	22.09	24.38	24.66	23.71
DRY MOLECULAR WEIGHT	29.40	29.40	29.44	29.41
WET MOLECULAR WEIGHT	26.88	26.62	26.62	26.71

NT = NOT TESTED

TABLE 2

Thorson, Inc.
Roseau, Minnesota
Baghouse Stack

Nova Environmental Services, Inc.
Project No. M93-977

EPA METHOD 5 - DETERMINATION OF PARTICULATE EMISSIONS FROM STATIONARY SOURCES

TEST NO. 1	RUN 1	RUN 2	RUN 3	AVERAGE
DATE OF RUN	13-Oct-93	13-Oct-93	13-Oct-93	
RUN START TIME	1040	1215	1400	
RUN END TIME	1155	1330	1510	
STACK STATIC PRESSURE (in. H2O)	-1.40	-1.40	-1.40	-1.40
CROSS SECTIONAL AREA (sq. ft.)	20.889	20.889	20.889	20.889
PITOT TUBE COEFFICIENT	0.840	0.840	0.840	0.840
SAMPLE GAS MOISTURE ANALYSES				
IMPINGERS (g)	198	219	218	212
DESSICCANT (g)	12	11	12	12
TOTAL MOISTURE COLLECTED (g)	210	230	230	223
SAMPLE GAS MOISTURE CONTENT (%)	22.09	24.38	24.66	23.71
PARTICULATE DATA				
FILTER PARTICULATE (g)	0.0134	0.0065	0.0037	0.0079
PROBE WASH PARTICULATE (g)	0.0181	0.0158	0.0174	0.0171
CONDENSIBLE PARTICULATE (g)	0.0967	0.0997	0.1025	0.0996
TOTAL PARTICULATE COLLECTED (g)	0.1282	0.1220	0.1236	0.1246
DRY GAS METER COEFFICIENT	0.9982	0.9982	0.9982	0.9982
BAROMETRIC PRESSURE (in. Hg)	29.90	29.90	29.90	29.90
AVG. ORIFICE PRESS. DROP (in. H2O)	0.97	0.88	0.87	0.91
AVG. GAS METER TEMP. (degrees F)	70.2	83.1	87.3	80.20
VOLUME THROUGH GAS METER				
AT METER CONDITIONS (cf)	35.04	34.59	34.33	34.65
STANDARD CONDITIONS (dscf)	34.88	33.60	33.10	33.86
TOTAL SAMPLING TIME (min.)	75.0	75.0	75.0	75.0
NOZZLE DIAMETER (in.)	0.198	0.198	0.198	0.198
AVG. STACK GAS TEMP. (degrees F)	292	288	287	289
VOLUMETRIC FLOWRATE				
AVG. STACK GAS VELOCITY (ft/sec)	66.57	64.84	64.08	65.16
ACTUAL (acfm)	83,429	81,268	80,312	81,670
STANDARD (scfm)	58,371	57,112	56,551	57,345
DRY STANDARD (dscfm)	45,475	43,188	42,606	43,756
ISOKINETIC VARIATION (%)	**99.96**	**101.40**	**101.24**	**100.87**
PARTICULATE CONCENTRATION				
ACTUAL (gr/acf)	**0.031**	**0.030**	**0.031**	**0.030**
DRY STANDARD (gr/dscf)	**0.057**	**0.056**	**0.058**	**0.057**
PARTICLE MASS RATE (lb/hr)	**22.085**	**20.718**	**21.024**	**21.276**

TABLE 2 CONTINUED

Thorson, Inc.
Roseau, Minnesota
Baghouse Stack

Nova Environmental Services, Inc.
Project No. M93-977

EPA METHOD 5 - DETERMINATION OF PARTICULATE EMISSIONS FROM STATIONARY SOURCES

TEST NO. 1	RUN 1	RUN 2	RUN 3	AVERAGE
DATE OF RUN	13-Oct-93	13-Oct-93	13-Oct-93	
RUN START TIME	1040	1215	1400	
RUN END TIME	1155	1330	1510	
STACK STATIC PRESSURE (in. H2O)	-1.40	-1.40	-1.40	-1.40
CROSS SECTIONAL AREA (sq. ft.)	20.889	20.889	20.889	20.889
PITOT TUBE COEFFICIENT	0.840	0.840	0.840	0.840
SAMPLE GAS MOISTURE ANALYSES				
IMPINGERS (g)	198	219	218	212
DESSICCANT (g)	12	11	12	12
TOTAL MOISTURE COLLECTED (g)	210	230	230	223
SAMPLE GAS MOISTURE CONTENT (%)	22.09	24.38	24.66	23.71
PARTICULATE DATA				
FILTER PARTICULATE (g)	0.0134	0.0065	0.0037	0.0079
PROBE WASH PARTICULATE (g)	0.0181	0.0158	0.0174	0.0171
*CONDENSIBLE PARTICULATE (g)	0.0000	0.0000	0.0000	0.0000
TOTAL PARTICULATE COLLECTED (g)	0.0315	0.0223	0.0211	0.0250
DRY GAS METER COEFFICIENT	0.9982	0.9982	0.9982	0.9982
BAROMETRIC PRESSURE (in. Hg)	29.90	29.90	29.90	29.90
AVG. ORIFICE PRESS. DROP (in. H2O)	0.97	0.88	0.87	0.91
AVG. GAS METER TEMP. (degrees F)	70.2	83.1	87.3	80.20
VOLUME THROUGH GAS METER				
AT METER CONDITIONS (cf)	35.04	34.59	34.33	34.65
STANDARD CONDITIONS (dscf)	34.88	33.60	33.10	33.86
TOTAL SAMPLING TIME (min.)	75.0	75.0	75.0	75.0
NOZZLE DIAMETER (in.)	0.198	0.198	0.198	0.198
AVG. STACK GAS TEMP. (degrees F)	292	288	287	289
VOLUMETRIC FLOWRATE				
AVG. STACK GAS VELOCITY (ft/sec)	66.57	64.84	64.08	65.16
ACTUAL (acfm)	83,429	81,268	80,312	81,670
STANDARD (scfm)	58,371	57,112	56,551	57,345
DRY STANDARD (dscfm)	45,475	43,188	42,606	43,756
ISOKINETIC VARIATION (%)	**99.96**	**101.40**	**101.24**	**100.87**
***PARTICULATE CONCENTRATION**				
ACTUAL (gr/acf)	**0.008**	**0.005**	**0.005**	**0.006**
DRY STANDARD (gr/dscf)	**0.014**	**0.010**	**0.010**	**0.011**
***PARTICLE MASS RATE (lb/hr)**	**5.427**	**3.787**	**3.589**	**4.268**

* Emisson and mass rates were calculated WITHOUT including condensible back-half organics.

TABLE 3

Thorson, Inc.
Roseau, Minnesota
Baghouse Stack

Nova Environmental Services, Inc.
Project No. M93-977
Observer T. Nelson

EPA Method 9 -- Visual Determination of the Opacity of Emissions

Test No. 1 1405 on 10/13/93

Minutes	Seconds 0	15	30	45
1	10	10	10	10
2	10	10	10	10
3	15	10	10	10
4	10	10	15	10
5	5	10	10	15
6	10	5	5	10
7	15	5	5	5
8	5	5	10	10
9	5	5	5	10
10	5	10	5	5
11	5	5	5	10
12	5	5	5	5
13	5	5	5	5
14	10	5	5	5
15	5	5	5	5
16	5	5	5	5
17	5	5	5	5
18	5	5	5	5
19	5	5	5	5
20	10	10	10	10
21	10	10	10	5
22	5	10	5	10
23	5	5	5	5
24	5	5	10	5
25	5	5	5	5
26	5	5	10	5
27	5	5	5	5
28	5	5	5	5
29	5	5	5	5
30	5	5	5	5

Minutes	Seconds 0	15	30	45
31	5	5	5	5
32	10	5	5	5
33	5	5	5	5
34	5	5	5	5
35	5	5	5	5
36	5	10	5	5
37	5	5	5	5
38	5	5	5	5
39	5	5	5	5
40	5	10	5	5
41	5	10	5	10
42	5	5	5	5
43	5	5	5	5
44	10	10	10	10
45	10	5	5	5
46	10	5	10	10
47	10	5	5	10
48	5	5	5	5
49	5	5	5	5
50	5	5	5	5
51	5	10	5	10
52	5	10	5	5
53	5	5	5	10
54	5	5	10	5
55	10	5	5	5
56	5	5	5	5
57	5	5	5	5
58	5	5	5	5
59	5	5	5	10
60	5	10	5	5

Average Opacity (%) 6.38

High Six-Minute Opacity (%) 10.21

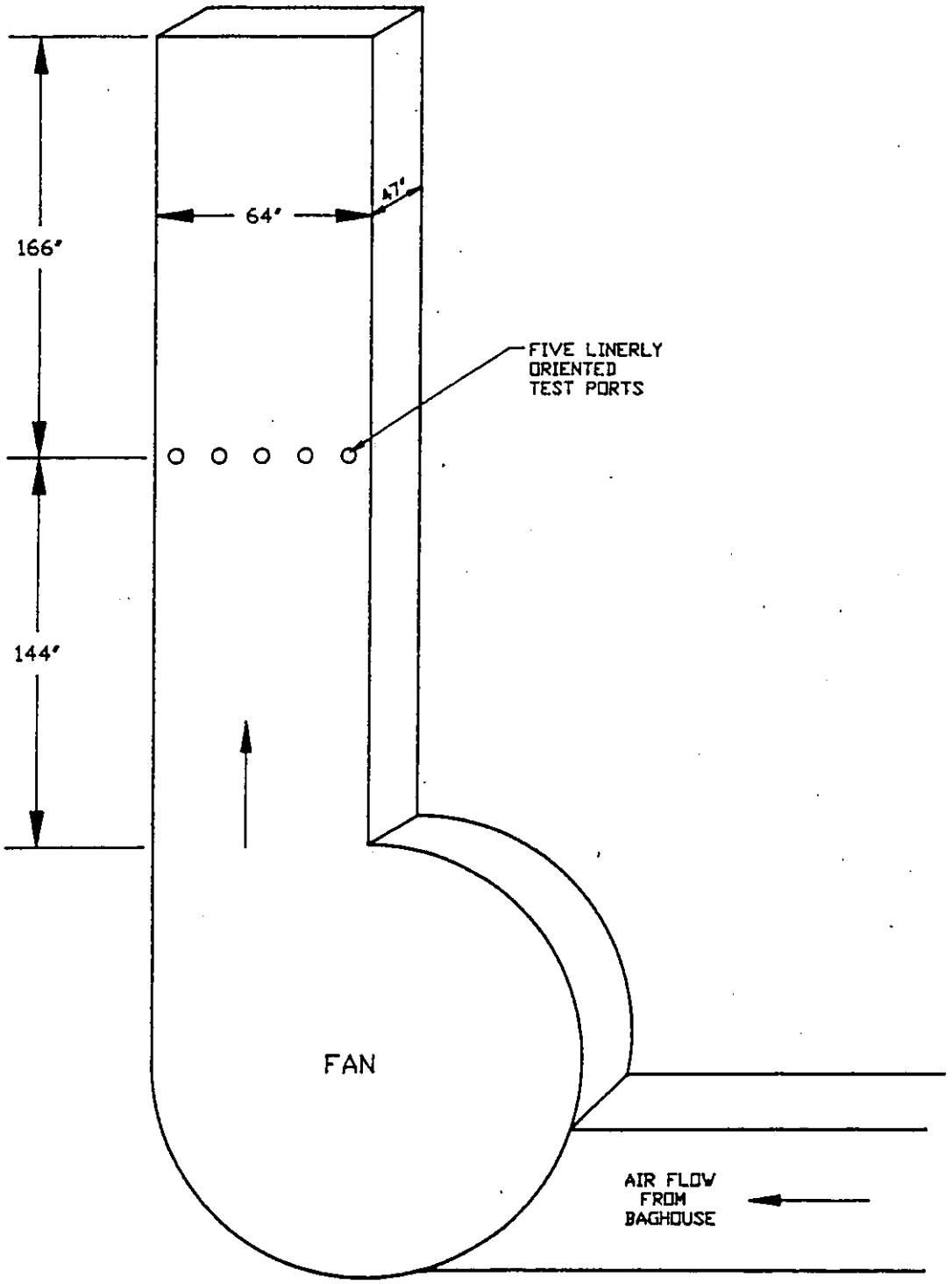

THORSON, INC.
BAGHOUSE STACK
ROSEAU, MINNESOTA

M1467/M93-977

Nova Environmental Services, Inc.

10/13/93

1

Appendix A

Field Data

EPA METHOD 2 FIELD DATA

PROJECT NAME Thorson Roseau
SOURCE Baghouse Stack
TEST 1 RUN 0 DATE 10/13/93
STACK DIA. 64x48 IN.
DRY BULB 298 °F WET BULB 150 °F
MANOMETER: X REG. ___ EXP. ___ ELEC.
BAROMETRIC PRESSURE 29.90 IN Hg
STATIC PRESSURE -1.40 IN WC
OPERATORS D. SMITH / T. NELSON
PITOT NO. PT1-4 Cp .840
FLOW INTO PAPER ___ /FLOW OUT OF PAPER X

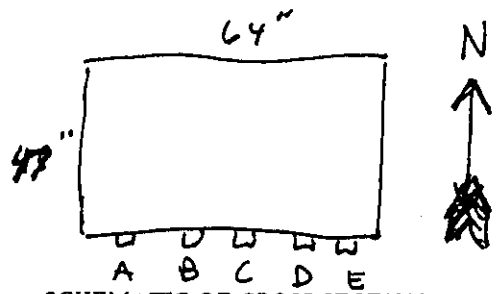

SCHEMATIC OF CROSS-SECTION

TRAVERSE POINT NO.	FRACTION OF DIAMETER	DISTANCE FROM STACK WALL (IN.)	DISTANCE FROM END OF PORT (IN.)	VELOCITY PRESSURE (IN WC)	TEMPERATURE OF GAS (°F)	CYCLONIC FLOW (Resultant Angle)
		Port Length:	2.0 In.	Time Start:	0920 Hrs.	
A 1		4.70	6.70	2.15	288	0
2		14.10	16.10	3.50	289	0
3		23.50	25.50	3.50	289	0
4		32.90	34.90	3.25	289	0
5		42.30	44.30	3.35	289	0
B 1				1.30	288	+1
2				1.50	288	+3
3				1.30	288	+2
4				1.70	289	+1
5				2.00	289	0
C 1				0.67	287	0
2				0.61	287	+1
3				0.40	288	+1
4				0.45	288	+1
5				0.85	287	+2
D 1				0.58	282	0
2				0.42	282	0
3				0.13	282	0
4		$\overline{\Delta P}$ = 1.14		0.10	282	0
5		MC = 18	%	0.18	282	0
E 1				0.28	278	0
2				0.16	278	0
3				0.05	278	0
4				0.00	278	0
5				0.00	278	0
Temp. Meas. Tool & S/N:				Time End:	0950 Hrs.	

METHOD2.FRM\AD\TRN

EPA METHOD 3/4/5 FIELD DATA

PROJECT NAME THORSON / ROSEAU METHOD 5
SOURCE BAGHOUSE OUTLET DATE 10-13-93 TEST 1 RUN 1

SAMPLE TRAIN LEAK CHECK:

PRETEST: (≤0.02 CFM AT 15 IN. Hg (vac) ☒ POSTTEST: (0.00 CFM AT 10 IN. Hg (vac) ☒

PARTICULATE CATCH DATA:

NO.S OF FILTERS USED: 1 00761

CONDENSATE DATA:

ITEM	WEIGHT (g)		
	FINAL	TARE	DIFFERENCE
IMPINGER NO. 1	398	200	198
IMPINGER NO. 2			
IMPINGER NO. 3			
CONDENSER			
DESICCANT	1316	1304	12
TOTAL			210

☐ AMBIENT AIR 20.9% O_2 (V/V)

INTEGRATED GAS SAMPLING DATA:

BAG PUMP NO. BP-1 BOX NO. BB-1 BAG NO. 1
BAG MATERIAL: TEDLAR SIZE: 44
PRETEST LEAK CHECK: 0 cc/MIN AT 20 IN. Hg
TIME START: 1040 (HRS) TIME END: 1155 (HRS)
SAMPLING RATE: 400 cc/MIN OPERATOR: DAS
S/N OF O_2 ANALYZER USED TO MONITOR TRAIN OUTLET: 136539

PITOT NO. PTB-4 Cp .840
BAR. PRESS. 29.90 IN Hg H20 22 %
NOZZLE NO. NB1-6 NOZZLE DIA. .198 IN.

EPA METHOD 5 FIELD DATA

PROJECT NAME THORSON / ROSEAU OPERATORS D. SMITH / T. NELSON METER BOX NO. 1 ΔHo 1.89 IN WC

SOURCE BAGHOUSE OUTLET DATE 10-13-93 TEST 1 RUN 1 GASMETER COEFF. 0.9982

TRAVERSE POINT NO.	SAMPLING TIME (MIN.)	SAMPLE VOL. (cf)	VELOCITY HEAD (IN WC)	ORIFICE METER (IN WC)	DES. VOL. (cf)	VAC IN Hg	TEMPERATURE (°F) STACK	PROBE	OVEN	IMPG.	GAS/IN	GAS/OUT	OXYGEN (% v/v)
	(1040)	(380.55)											
A - 5	3	382.90	2.60	2.04	2.90	5	295	249	251	43	62	60	14.4
4	6	385.33	2.90	2.24	5.35	6	299	250	252	42	62	60	14.5
3	9	388.02	3.40	2.62	8.01	7	299	250	252	41	63	59	14.5
2	12	390.67	3.40	2.63	0.67	7	298	250	251	41	65	59	14.5
1	15	393.14	2.90	2.25	3.13	7	298	250	250	41	67	60	14.8
B - 5	18	395.64	3.00	2.33	5.64	7	297	249	251	42	69	62	15.0
4	21	397.80	2.15	1.68	7.78	5	296	248	250	43	70	62	15.0
3	24	399.77	1.85	1.45	9.77	5	296	250	252	43	71	63	15.2
2	27	401.73	1.80	1.42	1.73	5	296	250	251	44	73	64	14.8
1	30	403.31	1.15	0.91	3.31	3	294	251	250	45	74	65	14.5
C - 5	33	404.97	1.30	1.03	4.99	4	292	248	249	46	74	66	14.0
4	36	406.16	0.59	0.47	6.13	2	293	252	252	47	75	67	14.0
3	39	407.02	0.36	0.29	7.02	1	294	250	251	48	74	67	13.8
2	42	408.15	0.58	0.46	8.14	2	296	249	250	48	74	68	13.8
1	45	409.29	0.60	0.48	9.29	2	295	250	251	49	75	69	13.7
D - 5	48	410.20	0.38	0.30	0.20	1	292	250	250	50	76	71	13.7
4	51	411.09	0.35	0.28	1.09	1	283	249	250	50	77	71	13.8
3	54	411.67	0.15	0.12	1.67	1	284	250	250	51	78	71	13.8
2	57	412.56	0.37	0.30	2.58	2	286	251	250	51	78	72	13.6
1	60	413.72	0.58	0.47	3.72	2	287	249	248	51	78	72	13.6
E - 5	63	413.72	0.00	0.00	3.72	0	285	250	252	51	78	72	13.6
4	66	413.72	0.00	0.00	3.72	0	283	250	252	52	78	72	13.6
3	69	414.02	0.04	0.03	4.02	1	283	248	252	52	79	76	13.6
2	72	414.60	0.15	0.12	4.61	1	284	250	250	51	79	76	13.6
(1155) 1	75	415.59	0.42	0.34	5.59	2	284	251	250	51	80	76	13.6
	θ = 75	Vm = 35.04		ΔH = .97							AVG. =	70.2	

EPA METHOD 3/4/5 FIELD DATA

PROJECT NAME THORSON/ROSEAU METHOD 5
SOURCE BAGHOUSE OUTLET DATE 10-13-93 TEST 1 RUN 2

SAMPLE TRAIN LEAK CHECK:

PRETEST: (≤0.02 CFM AT 15 IN. Hg (vac) ☒ POSTTEST: (0.00 CFM AT 10 IN. Hg (vac) ☒

PARTICULATE CATCH DATA:

NO.S OF FILTERS USED: 1 00762

CONDENSATE DATA:

ITEM	WEIGHT (g)		
	FINAL	TARE	DIFFERENCE
IMPINGER NO. 1	419	200	219
IMPINGER NO. 2			
IMPINGER NO. 3			
CONDENSER			
DESICCANT	1320	1309	11
TOTAL			230

☐ AMBIENT AIR 20.9% O_2 (V/V)

INTEGRATED GAS SAMPLING DATA:

BAG PUMP NO. BP-1 BOX NO. BB-1 BAG NO. 2
BAG MATERIAL: TEDLAR SIZE: 44L
PRETEST LEAK CHECK: 0 cc/MIN AT 20 IN. Hg
TIME START: 1215 (HRS) TIME END: 1330 (HRS)
SAMPLING RATE: 400 cc/MIN OPERATOR: D SMITH
S/N OF O_2 ANALYZER USED TO MONITOR TRAIN OUTLET: 136539

PITOT NO. PTB-4 Cp .840
BAR. PRESS. 29.90 IN Hg H20 23 %
NOZZLE NO. NS1-6 NOZZLE DIA. .198 IN.

EPA METHOD 5 FIELD DATA

PROJECT NAME THORSON/ROSEAU OPERATORS D. SMITH / T. NELSON METER BOX NO. 1 ΔHo 1.89 IN WC

SOURCE BAGHOUSE OUTLET DATE 10-13-93 TEST 1 RUN 2 GASMETER COEFF. 0.9982

TRAVERSE POINT NO.	SAMPLING TIME (MIN.)	SAMPLE VOL. (cf)	VELOCITY HEAD (IN WC)	ORIFICE METER (IN WC)	DES. VOL. (cf)	VAC IN Hg	TEMPERATURE (°F) STACK	PROBE	OVEN	IMPG.	GAS/IN	GAS/OUT	OXYGEN (% v/v)
	(1215)	(415.80											
A- 5	3	417.87	2.00	1.56	2.87	4	291	245	248	49	77	77	13.6
4	6	420.20	2.50	1.97	0.20	5	292	246	250	49	78	77	13.6
3	9	422.65	2.75	2.16	2.65	5	295	249	252	48	80	77	13.5
2	12	425.03	2.55	2.00	5.01	5	295	250	252	48	82	77	13.5
1	15	427.24	2.25	1.77	7.23	5	295	248	249	49	83	78	13.6
B- 5	18	429.72	2.80	2.21	9.72	6	294	249	251	49	85	79	13.6
4	21	431.87	2.05	1.63	1.86	5	290	249	250	50	85	79	13.6
3	24	433.87	1.80	1.44	3.87	5	290	250	252	50	86	79	13.6
2	27	435.79	1.65	1.32	5.79	4	291	250	251	50	87	79	13.6
1	30	437.44	1.20	0.96	7.43	3	291	249	249	51	87	80	13.6
C- 5	33	439.11	1.25	1.00	9.11	3	289	250	249	51	87	81	13.6
4	36	440.41	0.75	0.60	0.41	2	287	247	249	50	88	82	13.6
3	39	441.50	0.52	0.42	1.50	1	286	248	250	50	88	82	13.7
2	42	442.75	0.68	0.55	2.75	2	286	248	251	51	88	82	13.7
1	45	443.94	0.62	0.50	3.94	2	287	249	252	51	87	83	13.6
D- 5	48	444.83	0.35	0.28	4.83	1	285	250	252	50	86	83	13.6
4	51	445.52	0.20	0.16	5.51	1	283	251	251	50	86	83	13.8
3	54	446.12	0.16	0.13	6.12	1	283	250	250	50	86	83	13.8
2	57	447.14	0.46	0.37	7.14	2	283	249	250	50	86	83	13.8
1	60	448.31	0.60	0.48	8.31	3	287	248	249	51	86	84	13.6
E- 5	63	448.31	0.00	0.00	8.31	0	286	250	250	51	86	84	13.6
4	66	448.31	0.00	0.00	8.31	0	286	250	250	51	86	84	13.6
3	69	448.61	0.04	0.03	8.61	1	285	249	251	52	86	84	13.6
2	72	449.39	0.26	0.21	9.39	1	284	248	252	52	86	84	13.6
(1330) 1	75	450.39	0.44	0.36	0.39	1	285	250	252	52	86	85	13.6
	θ = 75	Vm = 34.59		ΔH = .89							AVG. = 83.1		

EPA METHOD 3/4/5 FIELD DATA

PROJECT NAME: THORSON/ROSEAU METHOD 5
SOURCE BAGHOUSE OUTLET DATE 10-13-93 TEST 1 RUN 3

SAMPLE TRAIN LEAK CHECK:

PRETEST: (≤0.02 CFM AT 15 IN. Hg (vac) ☒ POSTTEST: (0.00 CFM AT 15 IN. Hg (vac) ☒

PARTICULATE CATCH DATA:

NO.S OF FILTERS USED: 1 00763

CONDENSATE DATA:

ITEM	WEIGHT (g)		
	FINAL	TARE	DIFFERENCE
IMPINGER NO. 1	418	200	218
IMPINGER NO. 2			
IMPINGER NO. 3			
CONDENSER			
DESICCANT	1326	1314	12
TOTAL			230

☐ AMBIENT AIR 20.9% O_2 (V/V)

INTEGRATED GAS SAMPLING DATA:

BAG PUMP NO. BP-1 BOX NO. BB-1 BAG NO. 3
BAG MATERIAL: TEDLAR SIZE: 44L
PRETEST LEAK CHECK: 0 cc/MIN AT 20 IN. Hg
TIME START: 1400 (HRS) TIME END: 1510 (HRS)
SAMPLING RATE: 400 cc/MIN OPERATOR: DAS.
S/N OF O_2 ANALYZER USED TO MONITOR TRAIN OUTLET: 136539

PITOT NO. PTB-4 Cp .840
BAR. PRESS. 29.90 IN Hg H2O 24 %
NOZZLE NO. NS1-6 NOZZLE DIA. .198 IN.

EPA METHOD 5 FIELD DATA

PROJECT NAME THORSON/ROSEAU OPERATORS D. SMITH / T. NELSON METER BOX NO. 1 ΔHo 1.89 IN WC

SOURCE BAGHOUSE OUTLET DATE 10-13-93 TEST 1 RUN 3 GASMETER COEFF. 0.9982

TRAVERSE POINT NO.	SAMPLING TIME (MIN.)	SAMPLE VOL. (cf)	VELOCITY HEAD (IN WC)	ORIFICE METER (IN WC)	DES. VOL. (cf)	VAC IN Hg	TEMPERATURE (°F) STACK	PROBE	OVEN	IMPG.	GAS/IN	GAS/OUT	OXYGEN (% v/v)
	(1400)	(450.60)											
A - 5	3	452.69	2.00	1.55	2.69	4	295	249	253	51	82	83	14.0
4	6	454.95	2.40	1.86	4.97	5	295	250	252	51	83	83	14.0
3	9	457.40	2.75	2.13	7.42	5	295	250	251	52	84	83	13.8
2	12	459.75	2.50	1.95	9.76	5	292	250	252	53	88	83	13.8
1	15	461.99	2.25	1.77	1.99	5	290	249	252	54	89	83	13.7
B - 5	18	464.44	2.70	2.13	4.44	6	286	248	251	54	90	84	13.6
4	21	466.56	2.00	1.59	6.56	5	285	249	250	55	90	84	13.6
3	24	468.58	1.80	1.43	8.57	5	285	250	250	55	91	84	13.6
2	27	470.46	1.60	1.27	0.46	4	287	251	249	55	91	85	13.6
1	30	472.10	1.20	0.95	2.10	3	288	250	249	56	92	85	13.6
C - 5	33	473.81	1.30	1.03	3.81	3	288	250	250	57	92	85	13.5
4	36	475.07	0.70	0.56	5.07	2	288	250	252	57	92	85	13.5
3	39	476.14	0.52	0.41	6.15	1	287	249	252	58	92	85	13.5
2	42	477.37	0.65	0.52	7.37	2	285	248	253	58	92	85	13.5
1	45	478.53	0.60	0.48	8.53	2	285	248	252	58	92	85	13.6
D - 5	48	479.44	0.35	0.28	9.42	1	286	249	251	57	91	85	13.6
4	51	480.10	0.20	0.16	0.10	1	285	250	250	57	92	85	13.5
3	54	480.68	0.15	0.12	0.68	1	284	251	250	56	90	86	13.5
2	57	481.74	0.50	0.40	1.75	2	284	251	250	56	90	86	13.5
1	60	482.91	0.60	0.48	2.91	3	283	250	249	57	91	86	13.5
E - 5	63	482.91	0.00	0.00	2.91	0	282	250	248	57	90	86	13.5
4	66	482.91	0.00	0.00	2.91	0	282	250	249	58	90	86	13.5
3	69	483.25	0.05	0.04	3.25	1	283	249	252	59	90	86	13.5
2	72	483.92	0.20	0.16	3.92	1	284	249	252	59	90	86	13.5
(1510) 1	75	484.93	0.45	0.36	4.93	2	285	250	251	60	90	86	13.5
	θ = 75	Vm = 34.33		ΔH = .86							AVG. =	87.3	

Visible Emission Observation Form

SOURCE NAME	Thorson, Roseau
ADDRESS	4101 Bemidji Ave. No
CITY	Bemidji
STATE	MN
ZIP	
PHONE	(218) 751 5413
SOURCE ID NUMBER	
PROCESS EQUIPMENT	Asphalt Plant
OPERATING MODE	
CONTROL EQUIPMENT	Baghouse
OPERATING MODE	
DESCRIBE EMISSION POINT	START Baghouse Stack STOP Baghouse Stack
HEIGHT ABOVE GROUND LEVEL	START 40' STOP 40'
HEIGHT RELATIVE TO OBSERVER	START 40' STOP 40'
DISTANCE FROM OBSERVER	START 80' STOP 80'
DIRECTION FROM OBSERVER	START NE STOP NE
DESCRIBE EMISSIONS	START White Billowing STOP White Billowing
EMISSION COLOR	START white STOP white
PLUME TYPE: CONTINUOUS ☒ FUGITIVE ☐ INTERMITTENT ☐	
WATER DROPLETS PRESENT:	NO ☒ YES ☐
IF WATER DROPLET PLUME:	ATTACHED ☐ DETACHED ☒
POINT IN THE PLUME AT WHICH OPACITY WAS DETERMINED	START 1' from stack out STOP 1' from Stack out
DESCRIBE BACKGROUND	START Sky (pt cloudy) STOP Sky (pt cloudy)
BACKGROUND COLOR	START Blue STOP Blue
SKY CONDITIONS	START pt cld STOP pt cld
WIND SPEED	START 5mph STOP 5mph
WIND DIRECTION	START N STOP N
AMBIENT TEMP	START 45° STOP 45°
WET BULB TEMP.	
RH.percent	

Source Layout Sketch — Draw North Arrow

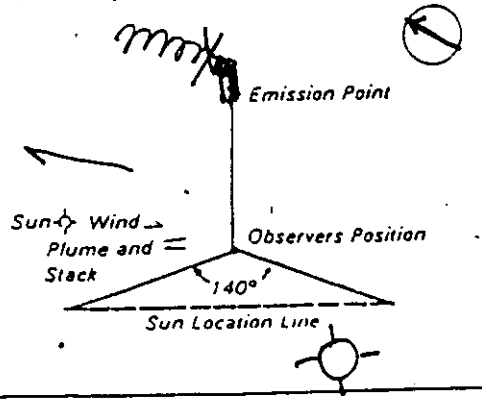

OBSERVATION DATE	START TIME	STOP TIME
10/13/93	1405	1505

MIN \ SEC	0	15	30	45	MIN \ SEC	0	15	30	45
1	10	10	10	10	31	5	5	5	5
2	10	10	10	10	32	10	5	5	5
3	15	10	10	10	33	5	5	5	5
4	10	10	15	10	34	5	5	5	5
5	5	10	10	15	35	5	5	5	5
6	10	5	5	10	36	5	10	5	5
7	15	5	5	5	37	5	5	5	5
8	5	5	10	10	38	5	5	5	5
9	5	5	5	10	39	5	5	5	5
10	5	10	5	5	40	5	10	5	5
11	5	5	5	10	41	5	10	5	10
12	5	5	5	5	42	5	5	5	5
13	5	5	5	5	43	5	5	5	5
14	10	5	5	5	44	10	10	10	10
15	5	5	5	5	45	10	5	5	5
16	5	5	5	5	46	10	5	10	10
17	5	5	5	5	47	10	5	5	10
18	5	5	5	5	48	5	5	5	5
19	5	5	5	5	49	5	5	5	5
20	10	10	10	10	50	5	5	5	5
21	10	10	10	5	51	5	10	5	10
22	5	10	5	10	52	5	10	5	5
23	5	5	5	5	53	5	5	5	10
24	5	5	10	5	54	5	5	10	5
25	5	5	5	5	55	10	5	5	5
26	5	5	10	5	56	5	5	5	5
27	5	5	5	5	57	5	5	5	5
28	5	5	5	5	58	5	5	5	5
29	5	5	5	5	59	5	5	5	10
30	5	5	5	5	60	5	10	5	5

AVERAGE OPACITY FOR HIGHEST PERIOD	NUMBER OF READINGS ABOVE % WERE
RANGE OF OPACITY READINGS	MINIMUM / MAXIMUM
OBSERVER'S NAME (PRINT)	Timothy Nelson
OBSERVER'S SIGNATURE	J. Robert Hulson
DATE	10/13/93
ORGANIZATION	Nova
CERTIFIED BY	ETA
DATE	10/6/93
VERIFIED BY	
DATE	
COMMENTS	
I HAVE RECEIVED A COPY OF THESE OPACITY OBSERVATIONS	
SIGNATURE	
TITLE	
DATE	

TANDY PC- 6 STACK TEST PROGRAM
FIELD DATA

PROJECT NAME THORSON/ROSEAU TEST NO. 1 DATE 10-13-93

SOURCE BAGHOUSE OUTLET OPERATOR DWAYNE A. SMITH

INITIALIZATION PARAMETERS		BEGINNING AND END RUN INPUT PARAMETERS	RUN 1	RUN 2	RUN 3
Y =	.9982	V/O	380.55	415.80	450.60
ΔH@ =	1.89	NO. OF POINTS	25	25	25
Cp =	.840	MC	22	23	24
D_n =	.198	V/F	415.59	450.39	484.93
P_b =	29.90	G-H_2O	210	230	230
Δt =	3.0	RUN TIME	75	75	75
MC =	22	1-RND/2-RECT	2	2	2
B'O_2 =	15	DIA (INS)	—	—	—
t_M =	65	L (INS)	47	47	47
P_g =	-1.40	W (INS)	64	64	64

END OF RUN - RUN 135

START OF RUN - RUN 22

ΔP - RUN 45

t_M IN/OUT - RUN 100

RESULTS

	RUN 1	RUN 2	RUN 3
$(\overline{\sqrt{\Delta P}})$	0.9569	0.9264	0.9196
$\overline{\Delta H}$	0.9712	0.8851	0.8645
$\overline{TS}$	291.6	288.2	286.8
$\overline{TM}$	70.2	83.1	82.3
V/STD	34.53	33.27	32.76
MC	22.26	24.55	24.84
$\overline{VEL}$	66.41	64.28	63.89
ISO%	99.41	101.50	100.77
ACFM	83,227	80,562	80,067
DSCFM	45,252	42,697	42,360

EPA METHOD 5 GAS METERING SYSTEM
QUALITY CONTROL CHECK DATA SHEET

PROJECT NAME THORSON/ROSEAU TEST NO. 1 DATE 10-13-93

SOURCE BAGHOUSE OUTLET STACK OPERATOR DUWAYNE A. SMITH

BAR. PRESS. 29.90 IN. Hg γ = 2.5 $\Delta H@$ 1.89 IN. W.C.

$\overline{\Delta P}$ = .9982

TIME (MIN.)	VOLUME (CF)	METER TEMP. (° F)	
		INLET	OUTLET
0915	(372.90)	47	44
2.5	374.70	48	45
5.0	376.58	48	45
7.5	378.41	51	46
10	380.28	52	46
0925	Vm = 7.38	(AVG t_m) =	°F

$$Yc = \frac{10}{Vm}\left[\frac{0.0319\ (T_m + 460)}{P\ bar}\right]^{0.5}$$

$$Yc = \frac{10}{(\quad)}\left[\frac{0.0319((\quad) + 460)}{(\quad)}\right]^{0.5}$$

Yc = _____ (MUST BE 0.97 – 1.03)

TEST PROTOCOL

PROJECT NAME THORSON / ROSEAU SOURCE BAGHOUSE OUTLET

PROJECT NUMBER _____ DATE 10-13-93

EQUIVALENT DIAMETER (Deq) FOR A RECTANGULAR DUCT = $\frac{L \times W \times 2}{(L + W)}$

A = $\frac{\text{DISTANCE FROM TEST PORTS TO DOWNSTREAM FLOW DISTURBANCE}}{D_s \text{ OR } D_{eq}}$

B = $\frac{\text{DISTANCE FROM TEST PORTS TO UPSTREAM FLOW DISTURBANCE}}{D_s \text{ OR } D_{eq}}$

CALCULATE: MN= 6(10–B) AND 6(10–4A). USE HIGHER OF TWO VALUES.
MUST USE 12 OR MORE SAMPLE POINTS PER TEST.
MUST NOT SAMPLE CLOSER THAN 1 INCH TO STACK WALL.
M = NO. OF TEST PORTS.
N = NO. OF POINTS PER PORT.
MN = TOTAL NO. OF TRAVERSE POINTS.
ΔT = TIME (IN MINUTES) PER TRAVERSE POINT.
θ = TIME (IN MINUTES) PER RUN.

ROUND STACK D_s = _____ INCHES INSIDE DIAMETER

RECTANGULAR STACK LENGTH = 47 WIDTH = 64

PORT LENGTH = 2 INCHES

$D_{eq} = \frac{L \times W \times 2}{(L + W)} = \frac{__ \times __ \times 2}{(__ + __)} =$

A = _____ DIAMETERS, THEREFORE, MN = 6(10 – 4 X ____) =

B = _____ DIAMETERS, THEREFORE, MN = 6(10 – ____) =

MN = 25

M = 5 Δt = 3.0

N = 5 θ = 75

FLOW GEOMETRY

PORT LOCATION

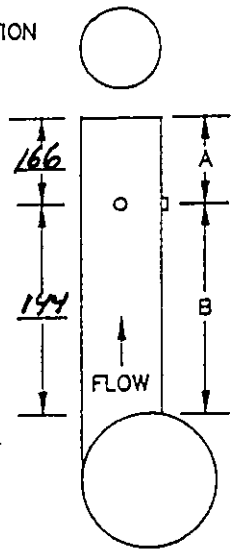

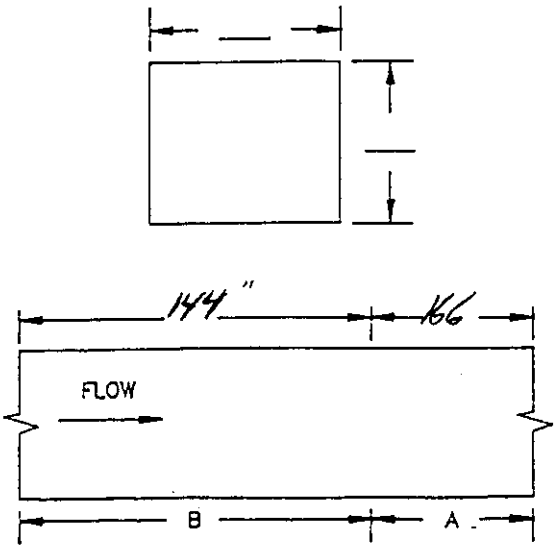

INDICATE PORT LOCATION

Appendix B

Laboratory Data

Nova Environmental Services, Inc.

E.P.A. METHOD 3 ANALYSIS

JOB# M93-977 DATE OF ANALYSIS 10-18-93
SOURCE ASPHALT PLANT LEAK CHECK PERFORMED YES
SITE BAGHOUSE OUTLET TECHNICIAN DWAYNE A. SMITH
CITY/STATE ROSEAU, MN. TYPE OF FUEL USED OIL

TEST/ RUN	READING NO.	BURET READING			CONCENTRATION (%v/v,dry)		F_o
		ZERO POINT	AFTER CO 2	AFTER O 2	CO_2	O_2	
AMBIENT AIR		0.00	99.97	79.07	0.03	20.90	0.0000
1/1	1	0.00	94.80	80.60	5.20	14.20	1.2885
	2	0.00	94.80	80.60	5.20	14.20	1.2885
	3	0.00	94.80	80.60	5.20	14.20	1.2885
1/2	1	0.00	95.00	80.00	5.00	15.00	1.1800
	2	0.00	95.00	80.00	5.00	15.00	1.1800
	3	0.00	95.00	80.00	5.00	15.00	1.1800
1/3	1	0.00	94.40	80.80	5.60	13.60	1.3036
	2	0.00	94.40	80.80	5.60	13.60	1.3036
	3	0.00	94.40	80.80	5.60	13.60	1.3036

CO_2	O_2	F_o
AVERAGE RUN 1 5.20	AVERAGE RUN 1 14.20	AVERAGE RUN 1 1.2885
AVERAGE RUN 2 5.00	AVERAGE RUN 2 15.00	AVERAGE RUN 2 1.1800
AVERAGE RUN 3 5.60	AVERAGE RUN 3 13.60	AVERAGE RUN 3 1.3036

Nova
Environmental Services, Inc.

EPA METHOD 5
GRAVIMETRIC ANALYSIS LABORATORY DATA

Plant: THORSON / ROSEAU
Source: ASPHALT PLANT BAGHOUSE OUTLET
Job No.: M93-977
Date Submitted: 10-15-93

Test No.: 1
Run No.: 1
Analyzed by: DUAYNE A. SMITH
Date: 10-28-93
Solvent: N/A
Transport Leakage: X No ___ Yes ___ ml

Filter Blank:

Filter No.: 00764
Final Wt. = 0.4921 g
Tare Wt. = 0.4921 g
Wt. Gain = 0.0000 g

Acetone Blank:

100 ml (Sample)
Final Wt. = ___ g
Tare Wt. = ___ g
Wt. Gain = 0.0004 g/100 ml

Water Blank:

100 ml (Sample)
Final Wt. = ___ g
Tare Wt. = ___ g
Wt. Gain = 0.0001 g/100 ml

Blank Correction Calculations:

Filter = (Wt. Gain) = -0- g
Acetone = 50 ml x 0.0004 g/100 ml = 0.0002 g
Water = 200 ml x 0.0001 g/100 ml = 0.0002 g

Filter:

Filter No. 00761
Final Wt. = 0.5075 g
Tare Wt. = 0.4941 g
Wt. Gain = 0.0134 g
Less Blank = 0.0000 g
Corrected Gain = 0.0134 g

Probe and Front Half Wash:

Volume Of Solvent: 50 ml
Final Wt. = ___ g
Tare Wt. = ___ g
Wt. Gain = 0.0183 g
Less Blank = 0.0002 g
Corrected Gain = 0.0181 g

Impinger Water and Backhalf Wash:

Organic Extraction:

Final Wt. = ___ g
**Tare Wt. = ___ g
Wt. Gain = 0.0969 g
Less Blank = 0.0002 g
Corrected Gain = 0.0967 g

Inorganic Water Solubles:

Final Wt. = ___ g
**Tare Wt. = ___ g
Wt. Gain = ___ g
Less Blank = ___ g
Corrected Gain = ___ g

Total Particulate:

Filter..... 0.0134 g
Front-Half Wash..... 0.0181 g
Extraction..... 0.0967 g
Water Solubles..... ___ g

Total Particulate..... ___ g

Front-Half includes sampling train components up to and including the filter.
Back-Half is from the filter, up to and including the third impinger.

**Tare weight here is of evaporating dish or beaker.

Nova
Environmental Services, Inc.

EPA METHOD 5
GRAVIMETRIC ANALYSIS LABORATORY DATA

Plant: THORSON / ROSEAU
Source: ASPHALT PLANT BAGHOUSE OUTLET
Job No.: M93-977
Date Submitted: 10-15-93

Test No.: 1
Analyzed by: DWAYNE A. SMITH
Date: 10-28-93
Transport Leakage: X No ___ Yes ___ ml

Run No.: 2
Solvent: N/A

Filter Blank:

Filter No.: 00764
Final Wt. = 0.4921 g
Tare Wt. = 0.4921 g
Wt. Gain = 0.0000 g

Acetone Blank:

100 ml (Sample)
Final Wt. = ___ g
Tare Wt. = ___ g
Wt. Gain = Ø.0004 g/100 ml

Water Blank:

100 ml (Sample)
Final Wt. = ___ g
Tare Wt. = ___ g
Wt. Gain = Ø.0001 g/100 ml

Blank Correction Calculations:

Filter = (Wt. Gain) = -0- g
Acetone = 55 ml x Ø.0004 g/100 ml = Ø.00022 g
Water = 200 ml x Ø.0001 g/100 ml = Ø.0002 g

Filter:

Filter No. 00762
Final Wt. = 0.4952 g
Tare Wt. = 0.4887 g
Wt. Gain = 0.0065 g
Less Blank = 0.0000 g
Corrected Gain = 0.0065 g

Probe and Front Half Wash:

Volume Of Solvent: 55 ml
Final Wt. = ___ g
Tare Wt. = ___ g
Wt. Gain = Ø.01600 g
Less Blank = Ø.ØØØ22 g
Corrected Gain = Ø.Ø1578 g

Impinger Water and Backhalf Wash:

Organic Extraction:

Final Wt. = ___ g
**Tare Wt. = ___ g
Wt. Gain = Ø.Ø999 g
Less Blank = Ø.0002 g
Corrected Gain = Ø.0997 g

Inorganic Water Solubles:

Final Wt. = ___ g
**Tare Wt. = ___ g
Wt. Gain = ___ g
Less Blank = ___ g
Corrected Gain = ___ g

Total Particulate:

Filter..... 0.0065 g
Front-Half Wash..... Ø.0158 g
Extraction..... Ø.Ø997 g
Water Solubles..... ___ g

Total Particulate..... ___ g

Front-Half includes sampling train components up to and including the filter.
Back-Half is from the filter, up to and including the third impinger.

**Tare weight here is of evaporating dish or beaker.

Nova
Environmental Services, Inc.

EPA METHOD 5
GRAVIMETRIC ANALYSIS LABORATORY DATA

Plant: THORSON / ROSEAU
Test No.: 1
Run No.: 3
Source: ASPHALT PLANT BAGHOUSE OUTLET
Analyzed by: DUWAYNE A. SMITH
Job No.: M93-977
Date:
Solvent: N/A
Date Submitted: 10-15-93
Transport Leakage: X No ___ Yes ___ ml

Filter Blank:

Filter No.: 00764
Final Wt. = 0.4921 g
Tare Wt. = 0.4921 g
Wt. Gain = 0.0000 g

Acetone Blank:

100 ml (Sample)
Final Wt. = ___ g
Tare Wt. = ___ g
Wt. Gain = Ø.0004 g/100 ml

Water Blank:

100 ml (Sample)
Final Wt. = ___ g
Tare Wt. = ___ g
Wt. Gain = Ø.0001 g/100 ml

Blank Correction Calculations:

Filter = (Wt. Gain) = -0- g
Acetone = 55 ml x 0.0004 g/100 ml = Ø.00022 g
Water = 200 ml x Ø.0001 g/100 ml = Ø.0002 g

Filter:

Filter No. 00763
Final Wt. = 0.4926 g
Tare Wt. = 0.4889 g
Wt. Gain = 0.0037 g
Less Blank = 0.0000 g
Corrected Gain = 0.0037 g

Probe and Front Half Wash:

Volume Of Solvent: 55 ml
Final Wt. = ___ g
Tare Wt. = ___ g
Wt. Gain = Ø.01760 g
Less Blank = Ø.00022 g
Corrected Gain = ~~Ø.00~~ Ø.01738 g

Impinger Water and Backhalf Wash:

Organic Extraction:

Final Wt. = ___ g
**Tare Wt. = ___ g
Wt. Gain = Ø.1027 g
Less Blank = Ø.0002 g
Corrected Gain = Ø.1025 g

Inorganic Water Solubles:

Final Wt. = ___ g
**Tare Wt. = ___ g
Wt. Gain = ___ g
Less Blank = ___ g
Corrected Gain = ___ g

Total Particulate:

Filter..... 0.0037 g
Front-Half Wash..... Ø.0174 g
Extraction..... Ø.1025 g
Water Solubles..... ___ g

Total Particulate..... ___ g

Front-Half includes sampling train components up to and including the filter.
Back-Half is from the filter, up to and including the third impinger.

**Tare weight here is of evaporating dish or beaker.

interpoll

INTERPOLL LABORATORIES, INC.
4500 BALL ROAD N.E.
CIRCLE PINES, MINNESOTA 55014-1819
TEL: 612/786-6020
FAX: 612/786-7854

November 15, 1993

Nova Environmental Services, Inc.
1107 Hazeltine Blvd., Suite 420
Chaska, Minnesota 55318

Attention: Dwayne Smith

LABORATORY REPORT: #1478
NOVA PROJECT: #M93-977

SAMPLES COLLECTED: October 13, 1993
SAMPLES RECEIVED: October 20, 1993

Sample Identification:		T1R1	T1R2	T1R3
Sample Type:		M-5 Train	M-5 Train	M-5 Train
Laboratory Log Number:		1478-01	1478-02	1478-03
Parameter	Units			
Method 5:				
Probe wash	grams	0.0183	0.0160	0.0176
Probe wash volume	mL	50	55	55
Impinger catch (back half)	grams	0.0969	0.0999	0.1027

Sample Identification:		T1R0	T1R0
Sample Type:		Acetone Blank	Water Blank
Laboratory Log Number:		1478-04	1478-05
Parameter	Units		
Method 5:			
Probe wash	grams	0.0004	NR
Probe wash volume	mL	100	NR
Impinger catch (back half)	grams	NR	0.0002

Interpoll Laboratories, Inc.
Laboratory Report #1478
Nova Environmental Services, Inc.

November 15, 1993

Sample Identification:	T1
Sample Type:	Used Oil
Laboratory Log Number:	Fuel
	1478-06

Parameter	Units	Method	Target Detection Limit	
Lead	%	SW-846, 6010	0.001	< 0.001
Total fluorine	% w/w	SW-846, 9056	0.0002	0.0015
Total chlorine	% w/w	SW-846, 9056	0.001	0.032
Total bromine	% w/w	SW-846, 9056	0.0003	< 0.0003
Total PCB	mg/Kg	SW-846, 8080	1.1	< 1.1
Gross heating value	BTU/LB	ASTM D2419	5	16927
Sulfur	%	ASTM D1552	0.05	0.45
Ash	%	ASTM D874	0.01	0.52
Flashpoint	°F	ASTM D93	2	113
Specific gravity	60/60°F	ASTM D1298	0.0005	0.9065
Acidity		ASTM D1093	0.01	6.79

Laboratory Log No.	Sample Identification	Sample Type	Moisture (%)[a]
1478-07	T1R1	Aggregate	4.20
1478-08	T1R2	Aggregate	4.48
1478-09	T1R3	Aggregate	3.71

Respectfully submitted,

Gregg W. Holman.
Laboratory Director

GWH/cg
< = less than
NR = not required
Invoice Enclosed

[a]Analysis performed by ASTM Method D3173.

All analyses were performed using EPA or other recognized methodologies.
All units are on an "as received" basis unless otherwise indicated.

Appendix C

Calculation Equations and Report Nomenclature

Nomenclature

A	=	Cross-sectional area of duct
A_n	=	Cross-sectional area of nozzle
B_{ws}	=	Water vapor in gas stream, proportion by volume
C_a	=	Particulate Concentration, actual, wet basis - gr/acf
C_s	=	Particulate concentration at dry standard conditions - gr/dscf
%EA	=	Excess air, percent by volume
G_d	=	Specific gravity relative to air, dimensionless
I	=	Isokinetic variation, percent by volume
M_d	=	Molecular weight of flue gas, dry, lb/lb-mole
M_g	=	Mass flow of wet flue gas, lb/hr
M_n	=	Total particulate collected, grams
M_p	=	Particulate mass flow, lb/hr
M_s	=	Molecular weight of flue gas, wet, lb/lb-mole
P_b	=	Barometric pressure, uncompensated, inches of mercury
P_g	=	Static pressure of duct, inches of water
P_s	=	Absolute gas pressure of duct, inches of mercury
Q	=	Actual flue gas volumetric flow rate, acfm
Q_{sd}	=	Dry flue gas volumetric flow rate corrected to standard conditions, dscfm
T_m	=	Average dry gas meter temperature, °R
T_s	=	Average stack gas temperature, °R
ϕ	=	Total sampling time, minutes
V_{lc}	=	Total volume of liquid collected in impingers and desiccant, ml
V_m	=	Volume of gas sample measured by gas meter, cubic feet
V_{std}	=	Volume of gas sample corrected to standard conditions, dry standard cubic feet
V_w	=	Volume of water vapor in gas sample, corrected to standard conditions
V_s	=	Linear velocity of flue gas, feet per second
Y	=	Dry gas meter calibration factor
ΔH	=	Orifice meter differential pressure, inches of water
ΔP	=	Velocity pressure of flue gas, inches of water
ρ	=	Actual gas density, pounds per cubic feet

Calculation Equations

EPA Method 2

$$V_s = 85.49\ C_p\ (\Delta p_{(avg)})^{1/2} \left[\frac{Ts}{P_s M_s} \right]^{1/2}$$

$$Q = 60\ V_s A$$

$$Q_{sd} = Q\ (1-B_{ws}) \left[\frac{528}{T_s} \right] \left[\frac{P_s}{29.92} \right]$$

$$M_g = \frac{4.995\ Q_{sd}\ G_d}{1-B_{ws}}$$

$$p = \frac{0.04585\ P_s M_s}{T_s}$$

Calculation Equations

EPA Method 3

$$M_d = (0.44 \times \%CO_2) + (0.32 \times \%0_2) + (0.28\ [\%N_2 + \%CO)])$$

$$M_s = M_d\ (1-B_{ws}) + 18\ B_{ws}$$

$$F_o = \frac{20.9 - \%0_2}{\%CO_2}$$

Calculation Equations

EPA Method 5

$$V_{std} = 17.647\ V_m\ Y \left[\frac{P_b + \Delta H/13.6}{T_m} \right]$$

$$V_w = 0.047070\ V_{lc}$$

$$B_{ws} = \frac{V_w}{V_w + V_{std}}$$

$$C_s = 15.432 \left[\frac{M_n}{V_{std}} \right]$$

$$C_a = 272.22 \left[\frac{M_n\ P_s}{T_s\ V_w + V_{std}} \right]$$

$$M_p = 0.00857\ C_s\ Q_{sd}$$

$$I = 0.09450 \left[\frac{T_s\ V_m}{P_s\ V_s\ A_n\ \phi\ (1-B_{ws})} \right]$$

REPORT NOMENCLATURE

acfm	Actual cubic feet per minute
°C	Degrees Centigrade
C_t	Results reported as carbon
cc(ml)	Cubic centimeter (milliliter)
cfh	Cubic feet per hour
cu. ft.	Cubic feet
dscfm	Dry standard cubic feet per minute
°F	Degrees Fahrenheit
dia	Diameter
ft./sec.	Feet per second
gph	Gallons per hour
gpm	Gallons per minute
gr/acf	Grains per actual cubic foot
gr/dscf	Grains per dry standard cubic foot
gr/dscf @ 12% CO_2	Grains per dry standard cubic foot corrected to 12 percent carbon dioxide
gr/dscf @ 7% O_2	Grains per dry standard cubic foot corrected to 7 percent oxygen
g	Gram
hrs	Hours
in	Inches
in Hg	Inches of mercury
in H_2O	Inches of water
in WC	Inches of water column
Klb/hr	Thousand pounds per hour
lb	Pound
lb/dscf	Pounds per dry standard cubic foot
lb/hr	Pounds per hour
lb/MMBTU	Pounds per million British Thermal Units heat input
MW	Megawatt
mg	Milligram
mg/dscm	Milligrams per dry standard cubic meter
min	Minutes
ppm	Parts per million by volume
ppm w/w	Parts per million by weight
PSIA	Pounds per square inch - actual
PSIG	Pounds per square inch - gauge
°R	Degress Rankin
sec.	Seconds
sq. ft.	Square Feet
tph	Tons per hour
ug	Microgram
%v/v	percent by volume
%w/w	Percent by weight

Appendix D

Quality Assurance Data

S-TYPE PITOT TUBE INSPECTION SHEET

PITOT NUMBER: PTB-4

DATE OF INSPECTION: 6/2/93

TECHNICIAN: D. Smith.

PITOT TUBE DIMENSIONS:

External tubing diameter (D_t)	____	IN.	(.1875≥.375)
Base to Side A opening plane (P_A)	____	IN.	(A=B)
Base to Side B opening plane (P_B)	____	IN.	($1.05D_t \geq 1.50D_t$)
Side A to Side B opening plane (P)	____	IN.	($P_A + P_B$)

ALIGNMENT:

$a_1 \leq 10°$	Ø	degrees	
$a_2 \leq 10°$	Ø	degrees	
$B_1 \leq 5°$	Ø	degrees	
$B_2 \leq 5°$	Ø	degrees	
$Z \leq .125"$	Ø.1	IN.	
$W \leq .03125"$	Ø	IN.	

DISTANCE FROM PITOT TO PROBE COMPONENTS:

Pitot to 0.500" nozzle	Ø.75	IN.	≥ .750
Pitot to probe sheath	3.00	IN.	≥ 3.00
Pitot to thermocouple (parallel to probe)	Ø.75	IN.	≥ .750
Pitot to thermocouple (perpendicular to probe)	2ØØ	IN.	≥ 2.00

NOZZLE CALIBRATION DATA SHEET

NOZZLE IDENTIFICATION NUMBER: NS1 - 6

FIELD TECHNICIAN: D. Smith

DATE OF CALIBRATION: On Site

POSITION	DIAMETER (INCHES)
1	.198 IN.
2	.198 IN.
3	.197 IN.
AVERAGE:	.198 IN.

NOTE: Nozzle is rotated by 60 degree increments and diameter measured to the nearest 0.001 inch.

GRASEBY NUTECH-RTL

C A L I B R A T I O N S H E E T

Customer : NOVA Serial : 80672
Date : 4/5/93

CALCULATION DATA FOR RUN :	1	2	3
1. Barometric Pressure, P(B):	30.20	30.20	30.20
2. Orifice Setting, Delta H :	2.00	0.75	6.00
3. Finial Reading (Test) :	958.632	969.414	980.015
4. Initial Reading (Test) :	948.065	958.835	969.678
5. Volume, V(T) Cubic Feet :	10.567	10.579	10.337
6. Temp Initial T(T(I)) F :	68	68	69
7. Temp Finial T(T(F)) F :	68	69	69
8. Finial Reading (Box) :	86.090	97.026	107.659
9. Initial Reading (Box) :	75.400	86.300	97.302
10. Volume, V(B) Cubic Feet :	10.690	10.726	10.357
11. Temp Initial T(B(I)) F :	73	75	75
12. Temp Final T(B(F)) F :	77	75	82
13. Elapsed Time, Minutes :	14.0	22.0	8.0
Delta H(a) :	1.9202	1.7775	1.9603
Gamma :	0.9967	0.9966	1.0014

Calibration Performed By : Alexander F. Patterson

GRASEBY NUTECH-RTL
4022 STIRRUP CREEK DRIVE, SUITE 325, DURHAM, NC 27703-9000, USA
TEL: 919 544 3775 FAX: 919 544 3770

Nova Environmental Services, Inc.

Minneapolis Office [X]
1107 Hazeltine Blvd/ Ste. 420
Chaska, MN 55318
(612) 448-9393
Fax # 612-448-9572

Chain of Custody Record

Chicago Office [ ]
O'Hare Atrium Office Plaza, Ste 170
2860 River Road
Des Plaines, Il 60018
(312) 803-4510
Fax # 312-803-0780

Name of Project: Thorson

Project Number: M13-977

Project Manager: TRN

Laboratory:

Special Instructions:

Sample No.	Date	No. & Vol. of Containers	Sample Location	Requested Analysis: EPA Met 5 postwash	EPA Met 5 (condensibles)	MN protocol				Sample Description / Remarks
T1R1	10/13	2 Jars		X	X					probe wash and Back-half (MN protocol)
T1R2	10/13	2 Jars		X	X					probe wash and Back-half (MN protocol)
T1R3	10/13	2 Jars		X	X					probe wash and Back-half (MN protocol)
T1RO	10/13	1 Jar	Blank							Acetone Blank
T1RO	10/13	1 Jar	Blank							Water Blank

Sampler (Signature)	Relinquished By	Affiliation	Date	Time	Received By	Affiliation	Date	Time
Michael Nelson	Michael Nelson	Nova	10/19/93	930				
Affiliation: Nova								
Date: 10/19/93	Time: 0930							

Nova Environmental Services, Inc.

Minneapolis Office ☒
1107 Hazeltine Blvd. Ste. 420
Chaska, MN 55318
(612) 448-9393
Fax # 612-448-9572

Chain of Custody Record

M93-177

Chicago Office ☐
O'Hare Atrium Office Plaza, Ste 170
2860 River Road
Des Plaines, Il 60018
(312) 803-4510
Fax # 312-803-0780

Name of Project: Thorson

Project Number:

Project Manager:

Laboratory: Intrapoll

Special Instructions:

Sample No.	Date	No. & Vol. of Containers	Sample Location	Sulfur % weight ASTM D1552	Ash % weight ASTM D874	Gross Heat Value ASTM 240	Spec. Gravity ASTM D1298	Lead % weight ASTM D2788	PCB ppm/weight EPA-600/4-81-045	Halogens ASTM D1317	% weight ASTM D808	Acidity ASTM D1093	Flash Point ASTM D93	% Moisture	Sample Description / Remarks
T1	10/13	1 Jar		X	X	X	X	X	X	X	X	X	X		Used Oil Fuel
T1R1	10/13	1 Jar												X	Aggregate composite
T1R2	10/13	1 Jar												X	Aggregate composit
T1R3	10/13	1 Jar												X	Aggregate composit

Sampler (Signature)	Relinquished By	Affiliation	Date	Time	Received By	Affiliation	Date	Time
Robert Nelson	Robert Nelson	Nova	10/14/13	930				
Affiliation: Nova								
Date: 10/17/93	Time: 0730							

Appendix E

Process/Source Information

Thorson, Inc.

P.O. Box 40
4101 Bemidji Avenue No.
Bemidji, MN 56601
218-751-5413

October 27, 1993

Mr. Timothy Roland Nelson
Project Manager, Nova
Suite 400 Hazeltine Gates
1107 Hazeltine Blvd
Chaska, MN 55318

Dear Tim:

I have enclosed the information you requested from Exhibit C. I have included all the information that I believe pertains to our facility.

I hope this will enable you to complete the results for the Roseau test.

If you have any questions, please call me at 218-751-5413.

Yours truly,

THORSON, INC.

John Leseman
Foreman

JL/kn

Enclosure

REQUIRED DATA
for
PROCESS EMISSIONS

Company Name Thorson, Inc.

C. Equipment & Operating Data

1. Process Equipment No./Ident. Boeing Asphalt Plant #1.

2. Process Equipment Description Portable Hot Mix Asphalt Production Plant.

3. Process equipment operating under normal operating conditions?

No _____. Yes XX. Process rate during the test approx. 410 ton/Hr.
(raw materials or finished product) (Finished Prod)

D. Instrument Data on Process Equipment

1. Include copy of production records or instrumentation which indicates rate of production or operation of the equipment, i.e. units per hour, lbs. per hour, pressure, air flow, etc.

E. Air Pollution Control Equipment

1. Type/model of control equipment Baghouse Dusteaster P-80-1152.

2. Air pressure drop across the control equipment 2-7 ave 4.5.

3. Air flow through the control equipment 80,000 acfm.

4. Was the control equipment operating normally? yes.

5. Data of last major maintenance/cleaning of control equipment _____

Several rows of bags were changed the 1st part of October.
because bad burner fuel had plugged them up.

F. Plant Manager's Certification

I certify that the information submitted herein is accurate and correct and that no information requested was withheld from the Division Manager.

By _____, Position Foreman.

lmb1770

REQUIRED DATA
for
COMBUSTION SOURCES

Company Name Thorson, Inc.

C. Fuel Input

1. Itemize all fuels and materials that are added to the combustion process during the test period. Attach ultimate analysis of the fuel.

FUEL DESCRIPTION Coal: State, City, Mine Oil: Specify Grade	INPUT (LBS/HR) (GAL/HR)	& MOISTURE As Rec'd	As Rec'd (BTU/LB) (BTU/GAL)	HEAT INPUT (BTU/HR)
No. 1 Oil Used	784 Gal/Hr. approx.			
No. 2 Oil Used	822 Gal/Hr. approx.			
No. 3 Oil Used	828 Gal/Hr. approx.			
			TOTAL	

2. Are the above fuels substantially the same as those normally burned? yes. If not, explain _____.

3. Are the above fuels normally burned in the proportions shown above? yes. If not, explain _____.

4. Describe any changes anticipated for procurement of fuels within the next twelve (12) months.

No changes.

D. Equipment & Operating Data

1. Furnace No. _____.

2. Furnace Mfg. _____.

3. Type of Firing _____.

4. Furnace operating under normal operating conditions: No _____; Yes _____.

Asphalt Plant Operating Conditions During Stack Testing

Rev/YH/93

Test Date(s) 10-13-93

Plant Mfr. & Model Boeing 4125

Type (circle one): Drum Mix Conventional
Other (list): Drum

Pollution Control Equipment: (Baghouse) Venturi Scrubber wet scrubber cyclone multicyclone
(circle one)

If wet scrubbing: ____% scrubber water recycled

List model: _____

Normal pressure drop across control equipment: _____ inches water

Air flow through control equipment: _____ acfm at _____F

Was control equipment operating normally during testing? _____

Date & procedures of last maintenance/cleaning of control equipment _____

Fuel:

Itemize all fuels and materials added to the combustion process during the test period. List fuel type used during testing (if oil, specify grade) _____. If other units of measure are used, specify and calculate appropriate heat input.

Test No.___	Fuel Input (Gal/hr)	BTU/GAL (as received)	Heat Input (BTU/HR)	%Moisture (as received in aggregate) Virgin	recycle	combined
Run 1						
Run 2						
Run 3						

Is the above fuel substantially the highest sulfur containing fuel normally burned? _____

Production specific fuel usage: (circle one) measured or calculated: _____ cubic foot/ ton hot mix
_____ gal/ton hot mix

No. of Burners: _____ Burner(s) rating: _____ MMBTU/HR = 100% setting

Operation:

time 15 min. intervals	burner setting %	aggregate tons per hour	recycle tons per hour	asphalt tons per hour	Drum Mix temp. F	dust collector pressure drop inches water	scrubber water flow rate gpm	Other (list)
10:40	3.5	240	105	15.4	272	4.4		
10:54	4	252	111	16.2	269	4.2		
11:10	4.3	254	114	16.4	268	4.6		
11:25	6.5	272	118	17.5	265	5		
11:40	6.5	274	120	17.5	267	4.6		
11:55	6.5	271	119	17.6	265	4.6		
12:20	6.2	274	120	17.7	272	5		
12:35	5.8	270	122	17.6	268	5		
12:50	5.8	271	125	17.6	266	5		
1:05	5.5	271	123	17.5	266	5.2		
1:20	5.2	273	121	17.5	268	5		
1:35	5.2	269	119	17.6	270	5		

Plant Operator's Certification: I certify that the information submitted herein is accurate and correct and that no information requested was withheld from the Division Manager.

By: David W. Rich, Phone: (219) 751-5413

Position: Plant Operator

Note: All information required must be completed and submitted as part of the performance test. Failure to submit the required information will result in an incomplete performance test report.

Time	Burner	ATPH	RTPH	ACTPH	Temp.	pressure drop
2:00	5	270	119	17.5	267	5
2:15	5	274	126	17.7	269	5.2
2:30	5.5	275	122	18	265	5
2:45	5.3	273	124	17.9	268	5
3:00	5.8	274	120	18.1	264	5.4
3:15	5.8	272	126	17.9	266	5.2

Darrell W. Rul
(218) 751-5413
Plant Operator