Note: This is a reference cited in *AP 42, Compilation of Air Pollutant Emission Factors, Volume I Stationary Point and Area Sources.* AP42 is located on the EPA web site at www.epa.gov/ttn/chief/ap42/

The file name refers to the reference number, the AP42 chapter and section. The file name "ref02_c01s02.pdf" would mean the reference is from AP42 chapter 1 section 2. The reference may be from a previous version of the section and no longer cited. The primary source should always be checked.

AMTEST

AmTest Inc.

Professional
Analytical
Services

14603 N.E. 87th St.
Redmond, WA
98052

Fax: 206 883 3495

Tel: 206 885 1664

SOURCE EMISSION EVALUATION

OCTOBER 31, 1990

Prepared For:

✓

WATSON ASPHALT PAVING COMPANY, INC.
CMI DRUM MIX ASPHALT PLANT
CMI BAGHOUSE
REDMOND, WASHINGTON
SEPTEMBER 21, 1990

Submitted by:

KRIS A. HANSEN
DIRECTOR, AIR QUALITY DIVISION

JAMES A. GUENTHOER
SR. PROJECT ENGINEER

AM TEST, INC.
AIR QUALITY DIVISION
REDMOND, WASHINGTON

We certify that the information contained herein is accurate and complete to the best of our knowledge.

TABLE OF CONTENTS

	Pages
INTRODUCTION	1-2
SUMMARY OF RESULTS	3-4
Methods 1-5 Summary of Results	4
SOURCE OPERATION	5
METHODOLOGY REFERENCES	6
SAMPLING PROCEDURES	7-8
SAMPLE TRAIN	9-10
SAMPLE CLEAN-UP AND ANALYSIS	11-13
QUALITY ASSURANCE PLAN	14-17
CALIBRATION PROCEDURES AND FREQUENCY	14-15
SAMPLE RECOVERY AND FIELD DOCUMENTATION	16
DATA REDUCTION, VALIDATION AND REPORTING	16-17
CALCULATION OF RESULTS	18
Method 5 Computer Printouts of Results	19-21
APPENDIX	22-47
Process Information	23-24
Figure 1. Location of sample ports and traverse points	25
Method 1 - Minimum Number of Traverse Points	26
Method 1 - Location of Traverse Points	27
Method 2 - Stack Gas Velocity	28
Method 3 - Molecular Weight & Excess Air Calc.	28
Method 4 - Stack Gas Moisture	29
Method 5 - Particulate Emission Conc. Calc.	30-31
Nomenclature - Method 5 Calculations	32-33
Sample Calculation Sheets	34-36
Figure 2. Particulate Sampling Train Schematic	37
Dry Gas Meter Calibration Information	38
Professional Resumes of Project Personnel	39-42
Am Test Laboratory - Information and Services	43-44
Field Data Sheets	45-47

INTRODUCTION

The purpose of this source emission evaluation performed at Watson Asphalt Paving Company, Inc.'s drum mix asphalt plant located in Redmond, Washington was to quantify the particulate matter emission concentration at the outlet of the baghouse exhaust. This drum mix asphalt plant was manufactured by CMI and is equipped with a CMI baghouse for controlling particulate matter emissions. According to plant personnel, the plant was producing approximately 300 tons per hour of mix on the test day. Three (3) particulate matter emission tests were performed on September 21, 1990. These tests were performed utilizing Environmental Protection Agency (EPA) procedures specified in the July 1, 1989 Title 40 Code of Federal Regulations, Part 60 (40 CFR 60), Appendix A, Methods 1, 2, 3A, 4 and 5. Methods 1 and 2 were performed to determine the stack gas velocity, temperature and volumetric flow rate. Method 3A was performed to determine the stack gas molecular weight and composition of the stack gas (carbon monoxide, carbon dioxide, and oxygen content). Method 4 was performed to determine the moisture content of the stack gas. Method 5 was performed to determine the particulate matter emission concentration of the stack gas. Condensable matter present in the gas stream was quantified by performing an extraction of the Method 5 impinger liquid as specified in Regulation I of the Puget Sound Air Pollution Control Agency (PSAPCA) regulations.

Mr. James A. Guenthoer, Sr. Project Engineer with Am Test, Inc.'s Air Quality Division based in Redmond, Washington performed the field sampling. Laboratory analysis, data reduction and final report preparation was performed by Mr. Kris A. Hansen, Ms. Angela F. Blaisdell, and Ms. Jan M. Widmeyer of Am Test. This

project was coordinated by Mr. Cliff Schroeder of Watson Asphalt Paving Company, Inc. Mr. Bill Synder was the plant operator on the test day.

SUMMARY OF RESULTS

The results of the three (3) Method 1-5 compliance tests for determining particulate matter emission concentration, collected at Watson Asphalt Paving Company, Inc.'s drum mix asphalt plant located in Redmond, Washington on September 21, 1990 are summarized in Table 1 below, and on page 4 on a computer printout titled "Methods 1-5 Summary of Results".

Table 1. Summary of particulate matter emission concentration results from samples collected September 21, 1990 at Watson Asphalt Paving Company, Inc.'s drum mix asphalt plant located in Redmond, Washington.

Sample Run #	Am Test Lab #	Total Partic. Conc. gr/dscf	Total Partic. Conc. mg/dscm	Mass Emission Rate lb/hr	Air Flow dscf/min
1	00356	0.018	42.1	3.76	23842
2	00357	0.012	28.1	2.56	24316
3	00358	0.016	37.1	3.35	24137
Average		0.015	35.8	3.22	24099

The total particulate emission concentration is presented in units of grains per dry standard cubic foot (gr/dscf) and milligrams per dry standard cubic meter (mg/dscm). The particulate matter mass emission rate is presented in units of pounds per hour (lb/hr). Airflow is also presented in units of dry standard cubic feet per minute (dscf/min). An acceptable leak check of less than 0.02 cfm at the highest vacuum rate (or greater) used during the test preceded and followed each run. The average percentage isokinetics for each run were within the acceptable limits of 100 $\pm$ 10%. Computer printouts which detail the complete results of runs 1-3 may be found following the "Calculation of Results" section of this report on pages 19-21. Field data sheets and example calulations of results are included in the Appendix of this report.

METHODS 1-5 SUMMARY OF RESULTS
AM TEST, INC. - AIR QUALITY DIVISION

FILE NAME: 74\WATSUM
CLIENT: WATSON ASPHALT
LOCATION: REDMOND, WASHINGTON
SAMPLE SITE: BAGHOUSE STACK
OPERATORS: J. GUENTHOER

	RUN #1	RUN #2	RUN #3	AVERAGE
LAB #:	00356	00357	00358	
DATE:	9/21/90	9/21/90	9/21/90	
START TIME:	07:34	09:47	12:01	
STOP TIME:	09:13	11:01	13:14	
SAMPLE TIME (minutes):	62.5	62.5	62.5	
VOLUME SAMPLED (cubic feet):	60.537	45.123	45.491	50.384
VOLUME SAMPLED (dry std. cubic feet):	61.827	44.650	43.786	50.088
VOLUME SAMPLED (dry std. cubic meters):	1.751	1.265	1.240	1.419
STACK GAS MOISTURE (percent):	30.37	31.14	30.66	30.72
BAROMETRIC PRESSURE (inches of Hg):	30.28	30.32	30.32	30.31
STATIC PRESSURE (inches of H2O):	0.30	0.30	0.30	0.30
STACK PRESSURE (inches of Hg):	30.30	30.34	30.34	30.33
STACK TEMPERATURE (degrees F.):	235.2	248.4	237.4	240.3
STACK TEMPERATURE (degrees R.):	695.2	708.4	697.4	700.3
CARBON DIOXIDE (percent):	5.4	5.4	5.2	5.3
OXYGEN (percent):	11.7	11.7	12.1	11.8
CARBON MONOXIDE (percent):	0	0	0	0
MOLECULAR WEIGHT (dry, g/g-mole):	29.33	29.33	29.32	29.33
MOLECULAR WEIGHT (wet, g/g-mole):	25.89	25.80	25.85	25.85
AVERAGE VELOCITY HEAD (inches of H2O):	0.419	0.452	0.433	0.435
PITOT TUBE Cp:	0.842	0.842	0.842	
VELOCITY (feet/second):	43.87	46.04	44.68	44.86
STACK DIAMETER (inches):	57.3x42.5	57.3x42.5	57.3x42.5	
STACK AREA (square feet):	16.91	16.91	16.91	
AIRFLOW (dry std. cubic feet per min.):	23842.1	24316.4	24137.1	24098.5
AIRFLOW (actual cubic feet per min.):	44517.5	46714.9	45340.5	45524.3
NOZZLE DIAMETER (inches):	0.374	0.315	0.315	0.335
ISOKINETICS (percent):	92	92	91	92
FRONT-HALF PARTIC. EMISS. CONC. (gr/dscf):	0.006	0.003	0.004	0.004
BACK-HALF PARTIC. EMISS. CONC. (gr/dscf):	0.013	0.009	0.012	0.011
TOTAL PARTIC. CONC. (gr/dscf):	0.018	0.012	0.016	0.015
PARTICULATE EMISSION CONC. (mg/dscm):	42.1	28.1	37.1	35.8
PARTIC. MASS EMISSION RATE (lb/hr):	3.76	2.56	3.35	3.22

SOURCE OPERATION

Watson Asphalt Paving Company, Inc.'s drum mix asphalt plant located in Redmond Washington was manufactured by CMI. This plant (Model PVM-10X) was constructed in 1990, and is equipped with a CMI baghouse to control particulate matter emissions. The CMI baghouse (Model SAF-3630) contains 650 Nomex bags. The pressure drop across the baghouse during these tests was aproximately 2 to 3.5 inches of water. According to plant personnel, the plant operated at an average production rate of 300 tons/hour, with a gravel moisture of approximately 5.0 percent and an asphalt discharge temperature of 290° F. Process and production conditions were considered to be representative according to Watson personnel. A process information sheet, completed by Mr. Cliff Schroeder of Watson Asphalt Paving Company, Inc. is included in the Appendix of this report.

METHODOLOGY REFERENCES

Sampling procedures specified in the July 1, 1989 Title 40 Code of Federal Regulations, Part 60 (40 CFR 60), Appendix A, Methods 1, 2, 3A, 4 and 5 were followed throughout this project. Sampling and analysis procedures specified in the Puget Sound Air Pollution Control Agency (PSAPCA) "Particulate Source Test Procedures" adopted by the PSAPCA Board of Directors, August 11, 1983, in accordance with section 9.09 of Regulation I, PSAPCA, were utilized in conjunction with the EPA Method 5 procedures for "backhalf" analysis for extracting condensable matter. Methodology suggested in the EPA's Air Pollution Training Institute "Course 450 - Source Sampling For Particulate Pollutants" and quality assurance procedures outlined in the EPA's reference manual titled Quality Assurance Handbook for Air Pollution Measurement Systems, Volume 3, EPA-600/4-77-027b, along with current updates, were used with respect to quality assurance and testing protocol.

SAMPLING PROCEDURES

The 57.25 by 42.5 inch rectangular duct has five (5) sampling ports along the 57.25 inch side. The sample ports are located 51 inches upstream and 254 inches downstream from the nearest flow disturbance. Five (5) velocity and temperature traverses of five (5) points were performed during each Method 5 test. Figure 1 located in the Appendix of this report is a schematic of the stack and the point locations selected. Each point was sampled for 2.5 minutes, for a total sampling time for each Method 5 run of 62.5 minutes. The sample probe was marked with felt pen and heat resistant tape to indicate the proper point location.

Stack condition measurements were performed prior to testing, including measurements of pressure, temperature, velocity and a check for cyclonic flow. A sample nozzle was chosen and isokinetic operating parameters were established utilizing a Hewlett-Packard programmable calculator. The sampling nozzle, probe and prefilter connective glassware were all cleaned and rinsed prior to use. The sample train was assembled and determined to be leak free following the procedures outlined in Method 5. Before each test, a final check was made to assure that the plant was operating at the desired production rate and the desired operating parameters. A final check was made of the sample box and probe heat temperatures. Ice was added to the condenser section. The sample nozzle was positioned in the stack at the first sample point. The sample pump was then turned on and the gas sampling rate was adjusted for isokinetic sampling. Sampling proceeded isokinetically at each of the 5 traverse points in each port. Upon completion of the test, the sample probe was removed from the stack and a post-test leak check was performed according to Method 5 procedures. Care was taken to assure that the nozzle tip did not touch the port nipple.

Samples of the combustion gas were collected during each run to be analyzed in Am Test's laboratory. The integrated samples collected in multilayer bags were analyzed using an Infrared Industries Model 2200 oxygen (O_2) analyzer. An Infrared Industries non-dispersive infrared (NDIR) analyzer (Model 702D) was utilized to measure the percent carbon dioxide (CO_2). An Automated Custom Systems (ACS) Model 3300 non-dispersive infrared analyzer was used to measure the parts per million (ppm) carbon monoxide (CO). Oxygen was also measured in the field using an Infrared Industries Model 2200 oxygen (O_2) analyzer. These analyzers meet 40 CFR 60, Appendix B, Performance Specification 3 and 4 criteria. Appropriate calibration gases were utilized to check the calibration of the automatic analyzers. The measurements during each test period were used to calculate the molecular weight of the stack gas. The results of the gas analysis are presented on the computer printouts in the "Calculation of Results" section of this report.

SAMPLE TRAIN

The sample train used for collecting particulate matter samples was an EPA Method 5 design with modifications as shown in Figure 2 which is located in the Appendix of this report. The stainless steel button hook nozzle used during each test was measured on-site with inside calipers. A stainless steel probe with a heated stainless steel liner was used for these tests. The probe was equipped with "S" type pitot tubes and a thermocouple sensor. A thermocouple indicator was used to measure the stack gas temperature at each sample point. The Fluke digital thermocouple indicator has been re-certified by the manufacturer to be accurate within ±1 degree Fahrenheit. A field check with 32 degree icewater was performed. A glass filter assembly containing a 125 millimeter Whatman 934-AH glass fiber filter was enclosed in a temperature-controlled heated sample box. The average box temperature was maintained at 248° F ± 25° F. The nozzle, probe liner, prefilter connective glassware and filter is often referred to as the "fronthalf" of the sample train. Following the filter is a condenser section which, by convention, is referred to as the "backhalf". The condenser section consisted of a modified Greenburg-Smith bubbler containing 100 milliliters (ml) of deionized water, an impinger also containing 100 ml of water, an empty bubbler, and a bubbler containing indicating silica gel desiccant. The backhalf was maintained at a temperature below 68° F by adding ice to the condenser section throughout sampling.

The sample train was connected to a control box by means of an umbilical cord which contains a vacuum hose, pitot lines, thermocouple wires and a 4-wire electrical cord. The control box (meter box) was used to monitor stack conditions and to facilitate isokinetic sampling. The control box consists of a diaphragm

pump which is used to pull the stack gas through the sample train, fine and coarse metering valves to control the sampling rate, a vacuum gauge which measures the pressure drop from the sampling nozzle to the metering valves, and a dry gas meter. The dry gas meter was calibrated using a spirometer at the Washington State Department of Ecology laboratory in Redmond, Washington. At the outlet of the dry gas meter is a calibrated orifice which is used to isokinetically control the flow of gas through the metering system. The pressure drop across the orifice was monitored with both low and high range magnehelic gauges. The pitot tubes utilized to measure stack gas velocity are connected to the control box via the umbilical cord. The control box contains low and high range magnehelic gauges which are used for the velocity measurement.

SAMPLE CLEAN-UP AND ANALYSIS

Following sample collection, the Method 5 sample box was transferred to a room free from air disturbances and airborne particulate matter. The filter was transferred to a petri dish labeled with the sample date, client name and run number. This filter portion of the particulate catch is referred to as the "A" section. Care was taken to assure that any loose particulate matter and filter mat were quantitatively transferred to the petri dish. The filters were then placed in an oven and baked at 103° C for 2 hours, then they were transferred to a desiccator containing indicating silica gel desiccant for at least 24 hours of desiccation prior to obtaining weights. The same baking and weighing procedure was followed to obtain the tare weights for the filters. The tare and final weights were made using a Mettler AE163 electronic balance set to a time integrating mode with a readability of 0.1 milligrams. The filters containing particulate matter were weighed to a constant weight of $\pm$0.5 milligrams. The interval between weighings was at least 6 hours. These weights were recorded in a bound laboratory notebook.

The contents of the nozzle, probe liner and prefilter connective glassware were quantitatively transferred to the "B" section storage container labeled with sample date, client name, and run number following each run. Several rinses of acetone, with simultaneous loosening of particulate matter using a clean nylon brush, were used for the fronthalf clean-up. An iodine flask with a female ball joint end was attached to the male ball joint end of the probe to assure that no particulate matter was lost during the rinsing and brushing of the probe. The contents of the iodine flask were quantitatively transferred to the "B" section storage container. The contents of this "B" section acetone rinse was transferred to a tared, graduated 150 milliliter beaker. The volume of acetone was recorded and the beakers were

placed in an evaporation chamber at slightly elevated ambient temperature and pressure. The acetone was evaporated at a temperature lower than the boiling point of acetone. A tared beaker with 100 milliliters of acetone from the same lot was handled in an identical fashion to the "B" section samples as a control. The tare and final weights of the beakers were obtained following at least 24 hours of desiccation. The samples and acetone blanks were weighed to a constant weight of $\pm$0.5 milligrams at 6 hour or greater intervals.

The bubblers and impingers utilized for the condenser section, or "backhalf" of the sample train were weighed with a readability of $\pm$0.1 grams before and after sampling on a Mettler electronic top loading balance. The difference between the initial and final weights of the condenser section constitute the amount of moisture gain during the run. The percent moisture was calculated and did not exceed the theoretical psychrometric chart value. The contents of the bubblers and impingers were then transferred to a 1000 ml graduated cylinder. The bubblers and impingers were rinsed with deionized water into the graduated cylinder and the liquid level was recorded. This liquid was then transferred to a separatory funnel and the contents were extracted with three (3) 50 ml portions of dichloromethane (CH_2Cl_2). The organic layer was transferred to a tared 150 ml beaker labeled the "Cx" section and this beaker's contents were allowed to evaporate at laboratory temperature and pressure until dry. The water layer was transferred to a tared 150 ml beaker labeled the "C" section and this beaker's contents were heated to 103° C until dry. The bubblers and impingers were given a final rinse with acetone into another tared, graduated beaker ("D" section) and it's contents were allowed to evaporate at laboratory temperature and pressure until dry. Sample blanks containing deionized water, dichloromethane, and acetone were analyzed in an identical fashion as the representative "section". All beakers

were desiccated for at least 24 hours and weighed to constant weights of ±0.5 milligrams after their contents had evaporated. The total particulate matter weight is the sum of the net weights of the particulate matter found on the filter, plus the net weights found in the B, C, Cx and D section beakers, minus the acetone, water, and dichloromethane blank concentrations. The particulate weights are included on the "Methods 1, 2, 3a, 4 and 5 - Particulate Matter Emissions" computer printouts which immediately follow the "Calculation of Results" section of this report.

QUALITY ASSURANCE PLAN

The purpose of the quality assurance plan is to provide guidelines for achieving quality control in air pollution measurements. The detailed procedures which were utilized are included in the Environmental Protection Agency's (EPA's) reference manual titled Quality Assurance Handbook for Air Pollution Measurements Systems, Volume 3, EPA-600/4-77-027b. Procedures are followed throughout equipment preparation, field sampling, sample recovery, analysis, and data reduction. Am Test, Inc.'s Air Quality Division quality assurance procedures are discussed below.

CALIBRATION PROCEDURES AND FREQUENCY

Field equipment utilized for on-site measurements is calibrated at a frequency as recommended by the equipment manufacturer or industry practice. Prior to field use, each instrument is calibrated and the calibration value is reported in a calibration log. If any measuring or test device requiring calibration cannot immediately be removed from service, the Project Manager may extend the calibration cycle providing a review of the equipment's history warrants the issuance of an extension. No equipment will be extended more than twice a calibration cycle, nor will the extension exceed one-half the prescribed calibration cycle. Test equipment consistently found to be out of calibration will be repaired or replaced.

The sample nozzles used to collect isokinetic samples were calibrated on-site before sampling using digital inside calipers readable to 0.001 inch. The dry gas meters used to accurately measure sample volumes have been calibrated using a wet test meter or a spirometer. The S-type pitot tubes utilized for velocity determination

have been calibrated using a wind tunnel and standard P-type pitot tube, and are inspected regularly for wear. The Fluke[R] digital thermocouple indicators used for temperature measurement have a readability of 1 degree Fahrenheit and have been certified by the manufacturer for their accuracy. Each thermocouple probe used to monitor temperature is checked quarterly at three (3) temperature settings. The Wallace and Tiernan absolute pressure gauge used to obtain pressure readings has a readability of 1 millimeter of mercury.

Support equipment is defined as all equipment, not previously discussed that is required for completing an environmental monitoring or measurement task. This equipment may include storage and transportation containers, sample recovery glassware, and communications gear. Support equipment is periodically inspected to maintain the performance standards necessary for proper and efficient execution of all tasks and responsibilities.

During the project, a systems audit was performed, consisting of an on-site qualitative inspection and review of the total measurement system. This inspection was conducted on a daily basis by the Project Leader. During the systems audit, the auditor observed the procedures and techniques of the field team in the following general areas:

- Setting up and leak testing the sampling train
- Isokinetic sampling check of the sampling train
- Final leak check of train
- Sample recovery

Visual inspections of pitot tubes, glassware, and other equipment were also made. The main purpose of a systems audit is to ensure that the measurement system will generate valid data, if operated properly.

Sample Recovery and Field Documentation

Data relative to samples, collected during each test, are immediately inspected for completeness and placed under the custody of the Project Leader until custody is transferred when the samples are returned to the Air Quality Division laboratory. Sample recovery was carried out in a suitable area free from particulate matter contamination.

In the laboratory, acetone, deionized water, dichloromethane and filter blanks were carried through the gravimetric analysis procedures. The samples were weighed to constant weights of ±0.5 milligrams following desiccation in a Labconco "Autodry Cabinet" desiccator. This desiccator is an electronic dehumidifier which automatically maintains the humidity inside the desiccator. The dehumidifier automatically recharges the internal desiccant every 5.5 hours. An Airguide humidity indicator accurate to ±1% is used to check the humidity inside the desiccator when obtaining tare and final weights. A small container of indicating silica gel is placed in the desiccators to maintain the desired humidity. The Mettler AE163 electronic balance used to obtain weights was set to a time integrating mode (100,000 readings per minute) with a readability of 0.01 milligrams. The balance was calibrated prior to every weighing session. The calibration of Am Test's Mettler balances is checked by the manufacturer on a yearly basis.

Data Reduction, Validation and Reporting

Raw data is handled according to strict guidelines when they are being transposed into computer files or to other logs. The guidelines include document receipt control procedures, file review, and sign-off by a checker. Raw data was entered into the appropriate software package by a "processor", then the entered figures

were checked for accuracy by a "checker," different from the "processor". Any mistakes were corrected, and figures were rechecked and signed off by the "checker". In addition, by-hand calculation checks were made to validate the computer output. All data generated by each phase of a laboratory or field sampling program were reviewed by the senior reviewer. The data was signed off by the senior reviewer prior to releasing the data for report preparation.

CALCULATION OF RESULTS

The Method 1-5 test results were calculated in accordance with current EPA 40 CFR 60 Method 1-5 and Puget Sound Air Pollution Control Agency (PSAPCA) Regulation I criteria. Copies of the pertinent equations are included in the Appendix of this report. Final result calculations were performed using custom-written spreadsheet programs run on Hewlett-Packard Vectra computer systems. A sample "by-hand" calculation was completed for run 1 using a Hewlett-Packard 11C calculator, and may be found in the Appendix of this report.

METHODS 1, 2, 3a, 4, 5 - PARTICULATE EMISSION RESULTS
AM TEST, INC. - AIR QUALITY DIVISION

FILE NAME:	74\WATSON-1	LAB #:	00356
CLIENT:	WATSON ASPHALT	START TIME:	07:34 o'clock
LOCATION:	REDMOND, WASHINGTON	STOP TIME:	09:13 o'clock
SAMPLE SITE:	BAGHOUSE STACK	SAMPLE TIME:	62.5 minutes
SAMPLE DATE:	SEPTEMBER 21, 1990	PROCESS RATE:	300 tons/hr
RUN #:	1-METHOD 5/BH		
OPERATORS:	J. GUENTHOER		
CONTACT:	C. SCHROEDER		

IMPINGER WEIGHTS

FINAL grams	INITIAL grams	NET grams
780.0	588.1	191.9
783.3	592.8	190.5
648.0	480.1	167.9
771.7	750.0	21.7
TOTAL H2O GAIN:		572.0
TOTAL VOLUME (SCF):		26.97
PERCENT MOISTURE:		30.37
Bws:		0.3037

PITOT TUBE Cp:	0.842
NOZZLE DIAMETER:	0.374 inches
NOZZLE AREA:	0.0008 sq. feet
STACK DIAMETER:	57.3x42.5inches
STACK AREA:	16.91 sq. feet
METER TEMPERATURE:	61.7 degrees F
BAROMETRIC PRES.:	30.28 inches Hg
STATIC PRESSURE:	0.30 inches H20
STACK PRESSURE:	30.30 inches Hg
ORIFICE PRESSURE:	1.710 inches H20
METER PRESSURE:	30.41 inches Hg

INIT. METER VOLUME:	891.563
FINAL METER VOLUME:	952.100
VOLUME SAMPLED:	60.537
STD VOLUME (DSCF):	61.827
STD VOLUME (DSCM):	1.751
Y FACTOR:	0.993

AVERAGE CONC. CO2:	5.4 percent
AVERAGE CONC. O2:	11.7 percent
AVERAGE CONC. CO:	0 percent
MOLECULAR WEIGHT:	29.33 g/g-mole-dry
MOLECULAR WEIGHT:	25.89 g/g-mole-wet

SAMPLE POINT	VELOCITY " OF H20	TEMPERATURE DEGREES F.	SAMPLE POINT	VELOCITY " OF H20	TEMPERATURE DEGREES F.
A 1	0.18	227	C 4	0.70	232
2	0.13	240	5	0.70	235
3	0.13	245	D 1	0.30	246
4	0.19	223	2	0.65	249
5	0.25	228	3	0.90	253
B 1	0.23	236	4	1.00	254
2	0.21	212	5	1.00	253
3	0.21	226	E 1	0.20	249
4	0.30	235	2	0.40	255
5	0.50	236	3	0.80	256
C 1	0.26	162	4	0.60	251
2	0.45	206	5	0.60	249
3	0.60	222			

PERCENT ISOKINETICS:	92 %	
STACK TEMPERATURE:	235.2 degrees F	695.2 degrees R
AVERAGE VELOCITY HEAD:	0.419 " of H20	
STACK GAS VELOCITY:		43.87 ft/second
STACK GAS AIR FLOW:	44517.5 acf/min	23842.1 dscf/min
PARTICULATE EMISSION CONCENTRATION (FRONT-HALF):		0.006 gr/dscf
PARTICULATE EMISSION CONCENTRATION (BACK-HALF):		0.013 gr/dscf
TOTAL PARTICULATE EMISSION CONC. (FRONT & BACK-HALF):		0.018 gr/dscf
TOTAL PARTICULATE EMISSION CONCENTRATION:		42.1 mg/dscm
PARTICULATE MATTER MASS EMISSION RATE:		3.76 lb/hr

FRONTHALF PARTICULATE MATTER MASS LOADING

FILTER NUMBER:	#125-1328
TARE WEIGHT OF FILTER (grams):	1.0072
FINAL WEIGHT OF FILTER (grams):	1.0211
NET WEIGHT OF PARTICULATE MATTER (grams):	0.0139
BEAKER NUMBER:	#150-110
TARE WEIGHT OF BEAKER (grams):	66.7754
FINAL WEIGHT OF BEAKER (grams):	66.7850
NET WEIGHT OF PARTICULATE MATTER (grams):	0.0096
VOLUME OF ACETONE (milliliters):	85.0
WT./VOL. OF ACETONE BLANK (milligrams/ml):	0.003
NET WEIGHT OF PARTIC. DUE TO ACETONE (grams):	0.0003
TOTAL FRONTHALF PARTICULATE MATTER (grams):	0.0232

BACKHALF PARTICULATE MATTER MASS LOADING

"C" SECTION - CONDENSER PARTICULATE	#150-988
TARE WEIGHT OF BEAKER (grams):	68.5468
FINAL WEIGHT OF BEAKER (grams):	68.5628
NET WEIGHT OF PARTIC. MATTER (grams):	0.0160
TOTAL VOLUME OF WATER (milliliters):	800.0
VOLUME OF WATER CONDENSED (milliliters):	550.3
NET VOLUME OF WATER FOR BLANK (milliliters):	249.7
WT./VOL. OF WATER BLANK (milligrams/ml):	0.001
NET WEIGHT OF PARTIC. DUE TO WATER (grams):	0.0002
"Cx" SECTION - HYDROCARBON EXTRACTION	#150-967
TARE WEIGHT OF BEAKER (grams):	68.2903
FINAL WEIGHT OF BEAKER (grams):	68.3095
NET WEIGHT OF PARTIC. MATTER (grams):	0.0192
TOTAL VOLUME OF CH2Cl2 (milliliters):	150.0
WT./VOL. OF CH2Cl2 BLANK (milligrams):	0.000
NET WEIGHT OF PARTIC. DUE TO CH2Cl2 (grams):	0.0000
"D" SECTION - ACETONE RINSE OF CONDENSER	#150-113
TARE WEIGHT OF BEAKER (grams):	65.6915
FINAL WEIGHT OF BEAKER (grams):	65.7071
NET WEIGHT OF PARTIC. MATTER (grams):	0.0156
TOTAL VOLUME OF ACETONE (milliliters):	50.0
WT./VOL. OF ACETONE BLANK (milligrams/ml):	0.003
NET WEIGHT OF PARTIC. DUE TO ACETONE (grams):	0.0002
TOTAL BACKHALF PARTICULATE MATTER (grams):	0.0504
TOTAL WEIGHT OF PARTICULATE MATTER (grams):	0.0736

METHODS 1, 2, 3a, 4, 5 - PARTICULATE EMISSION RESULTS
AM TEST, INC. - AIR QUALITY DIVISION

FILE NAME:	74\WATSON-2	LAB #:	00357	
CLIENT:	WATSON ASPHALT	START TIME:	09:47	o'clock
LOCATION:	REDMOND, WASHINGTON	STOP TIME:	11:01	o'clock
SAMPLE SITE:	BAGHOUSE STACK	SAMPLE TIME:	62.5	minutes
SAMPLE DATE:	SEPTEMBER 21, 1990	PROCESS RATE:	300	tons/hr
RUN #:	2-METHOD 5/BH			
OPERATORS:	J. GUENTHOER			
CONTACT:	C. SCHROEDER			

IMPINGER WEIGHTS

FINAL grams	INITIAL grams	NET grams
777.6	589.9	187.7
802.9	616.9	186.0
552.3	518.0	34.3
767.8	747.6	20.2
TOTAL H2O GAIN:		428.2
TOTAL VOLUME (SCF):		20.19
PERCENT MOISTURE:		31.14
Bws:		0.3114

PITOT TUBE Cp:	0.842		
NOZZLE DIAMETER:	0.315	inches	
NOZZLE AREA:	0.0005	sq. feet	
STACK DIAMETER:	57.3x42.5	inches	
STACK AREA:	16.91	sq. feet	
METER TEMPERATURE:	78.2	degrees F	
BAROMETRIC PRES.:	30.32	inches Hg	
STATIC PRESSURE:	0.30	inches H2O	
STACK PRESSURE:	30.34	inches Hg	
ORIFICE PRESSURE:	0.968	inches H2O	
METER PRESSURE:	30.39	inches Hg	

INIT. METER VOLUME:	956.743		
FINAL METER VOLUME:	1001.866		
VOLUME SAMPLED:	45.123		
STD VOLUME (DSCF):	44.650		
STD VOLUME (DSCM):	1.265		
Y FACTOR:	0.993		
AVERAGE CONC. CO2:	5.4	percent	
AVERAGE CONC. O2:	11.7	percent	
AVERAGE CONC. CO:	0	percent	
MOLECULAR WEIGHT:	29.33	g/g-mole-dry	
MOLECULAR WEIGHT:	25.80	g/g-mole-wet	

SAMPLE POINT	VELOCITY " OF H2O	TEMPERATURE DEGREES F.	SAMPLE POINT	VELOCITY " OF H2O	TEMPERATURE DEGREES F.
A 1	0.10	207	C 4	0.70	254
2	0.10	221	5	0.70	253
3	0.15	231	D 1	0.30	253
4	0.19	238	2	0.70	255
5	0.25	241	3	1.00	256
B 1	0.25	242	4	1.00	257
2	0.27	251	5	0.90	255
3	0.30	253	E 1	0.25	249
4	0.30	253	2	0.40	256
5	0.40	252	3	0.90	258
C 1	0.30	249	4	1.10	258
2	0.40	253	5	1.10	260
3	0.55	254			

PERCENT ISOKINETICS:	92 %		
STACK TEMPERATURE:	248.4	degrees F	708.4 degrees R
AVERAGE VELOCITY HEAD:	0.452	" of H2O	
STACK GAS VELOCITY:			46.04 ft/second
STACK GAS AIR FLOW:	46714.9	acf/min	24316.4 dscf/min
PARTICULATE EMISSION CONCENTRATION (FRONT-HALF):			0.003 gr/dscf
PARTICULATE EMISSION CONCENTRATION (BACK-HALF):			0.009 gr/dscf
TOTAL PARTICULATE EMISSION CONC. (FRONT & BACK-HALF):			0.012 gr/dscf
TOTAL PARTICULATE EMISSION CONCENTRATION:			28.1 mg/dscm
PARTICULATE MATTER MASS EMISSION RATE:			2.56 lb/hr

FRONTHALF PARTICULATE MATTER MASS LOADING

FILTER NUMBER:	#125-1329
TARE WEIGHT OF FILTER (grams):	1.0210
FINAL WEIGHT OF FILTER (grams):	1.0263
NET WEIGHT OF PARTICULATE MATTER (grams):	0.0053
BEAKER NUMBER:	#150-111
TARE WEIGHT OF BEAKER (grams):	79.4600
FINAL WEIGHT OF BEAKER (grams):	79.4639
NET WEIGHT OF PARTICULATE MATTER (grams):	0.0039
VOLUME OF ACETONE (milliliters):	80.0
WT./VOL. OF ACETONE BLANK (milligrams/ml):	0.003
NET WEIGHT OF PARTIC. DUE TO ACETONE (grams):	0.0002
TOTAL FRONTHALF PARTICULATE MATTER (grams):	0.0090

BACKHALF PARTICULATE MATTER MASS LOADING

"C" SECTION - CONDENSER PARTICULATE	#150-989
TARE WEIGHT OF BEAKER (grams):	67.4912
FINAL WEIGHT OF BEAKER (grams):	67.4984
NET WEIGHT OF PARTIC. MATTER (grams):	0.0072
TOTAL VOLUME OF WATER (milliliters):	650.0
VOLUME OF WATER CONDENSED (milliliters):	408.0
NET VOLUME OF WATER FOR BLANK (milliliters):	242.0
WT./VOL. OF WATER BLANK (milligrams/ml):	0.001
NET WEIGHT OF PARTIC. DUE TO WATER (grams):	0.0002
"Cx" SECTION - HYDROCARBON EXTRACTION	#150-968
TARE WEIGHT OF BEAKER (grams):	66.7468
FINAL WEIGHT OF BEAKER (grams):	66.7640
NET WEIGHT OF PARTIC. MATTER (grams):	0.0172
TOTAL VOLUME OF CH2Cl2 (milliliters):	150.0
WT./VOL. OF CH2Cl2 BLANK (milligrams):	0.000
NET WEIGHT OF PARTIC. DUE TO CH2Cl2 (grams):	0.0000
"D" SECTION - ACETONE RINSE OF CONDENSER	#150-114
TARE WEIGHT OF BEAKER (grams):	65.9847
FINAL WEIGHT OF BEAKER (grams):	65.9873
NET WEIGHT OF PARTIC. MATTER (grams):	0.0026
TOTAL VOLUME OF ACETONE (milliliters):	45.0
WT./VOL. OF ACETONE BLANK (milligrams/ml):	0.003
NET WEIGHT OF PARTIC. DUE TO ACETONE (grams):	0.0001
TOTAL BACKHALF PARTICULATE MATTER (grams):	0.0266
TOTAL WEIGHT OF PARTICULATE MATTER (grams):	0.0356

METHODS 1, 2, 3a, 4, 5 - PARTICULATE EMISSION RESULTS
AM TEST, INC. - AIR QUALITY DIVISION

FILE NAME:	74\WATSON-3	LAB #:	00358
CLIENT:	WATSON ASPHALT	START TIME:	12:01 o'clock
LOCATION:	REDMOND, WASHINGTON	STOP TIME:	13:14 o'clock
SAMPLE SITE:	BAGHOUSE STACK	SAMPLE TIME:	62.5 minutes
SAMPLE DATE:	SEPTEMBER 21, 1990	PROCESS RATE:	300 tons/hr
RUN #:	3-METHOD 5/BH		
OPERATORS:	J. GUENTHOER		
CONTACT:	C. SCHROEDER		

IMPINGER WEIGHTS

FINAL grams	INITIAL grams	NET grams
756.5	577.0	179.5
832.1	631.4	200.7
534.7	522.0	12.7
779.5	761.8	17.7

TOTAL H2O GAIN:	410.6	PITOT TUBE Cp:	0.842
TOTAL VOLUME (SCF):	19.36	NOZZLE DIAMETER:	0.315 inches
PERCENT MOISTURE:	30.66	NOZZLE AREA:	0.0005 sq. feet
Bws:	0.3066	STACK DIAMETER:	57.3x42.5inches
		STACK AREA:	16.91 sq. feet
		METER TEMPERATURE:	93.3 degrees F
		BAROMETRIC PRES.:	30.32 inches Hg
		STATIC PRESSURE:	0.30 inches H2O
		STACK PRESSURE:	30.34 inches Hg
		ORIFICE PRESSURE:	0.968 inches H2O
		METER PRESSURE:	30.39 inches Hg
INIT. METER VOLUME:	7.196		
FINAL METER VOLUME:	52.687	AVERAGE CONC. CO2:	5.2 percent
VOLUME SAMPLED:	45.491	AVERAGE CONC. O2:	12.1 percent
STD VOLUME (DSCF):	43.786	AVERAGE CONC. CO:	0 percent
STD VOLUME (DSCM):	1.240	MOLECULAR WEIGHT:	29.32 g/g-mole-dry
Y FACTOR:	0.993	MOLECULAR WEIGHT:	25.85 g/g-mole-wet

SAMPLE POINT	VELOCITY " OF H2O	TEMPERATURE DEGREES F.	SAMPLE POINT	VELOCITY " OF H2O	TEMPERATURE DEGREES F.
A 1	0.10	185	C 4	0.70	247
2	0.10	205	5	0.70	243
3	0.13	214	D 1	0.35	241
4	0.18	220	2	0.70	244
5	0.25	226	3	0.80	246
B 1	0.20	233	4	0.90	246
2	0.25	241	5	0.90	244
3	0.25	245	E 1	0.20	242
4	0.30	246	2	0.40	245
5	0.40	244	3	0.85	247
C 1	0.30	245	4	1.00	247
2	0.40	248	5	1.00	245
3	0.70	247			

PERCENT ISOKINETICS:	91 %	
STACK TEMPERATURE:	237.4 degrees F	697.4 degrees R
AVERAGE VELOCITY HEAD:	0.433 " of H2O	
STACK GAS VELOCITY:		44.68 ft/second
STACK GAS AIR FLOW:	45340.5 acf/min	24137.1 dscf/min
PARTICULATE EMISSION CONCENTRATION (FRONT-HALF):		0.004 gr/dscf
PARTICULATE EMISSION CONCENTRATION (BACK-HALF):		0.012 gr/dscf
TOTAL PARTICULATE EMISSION CONC. (FRONT & BACK-HALF):		0.016 gr/dscf
TOTAL PARTICULATE EMISSION CONCENTRATION:		37.1 mg/dscm
PARTICULATE MATTER MASS EMISSION RATE:		3.35 lb/hr

FRONTHALF PARTICULATE MATTER MASS LOADING

FILTER NUMBER:	#125-124
TARE WEIGHT OF FILTER (grams):	1.0475
FINAL WEIGHT OF FILTER (grams):	1.0508
NET WEIGHT OF PARTICULATE MATTER (grams):	0.0033
BEAKER NUMBER:	#150-112
TARE WEIGHT OF BEAKER (grams):	67.7961
FINAL WEIGHT OF BEAKER (grams):	67.8048
NET WEIGHT OF PARTICULATE MATTER (grams):	0.0087
VOLUME OF ACETONE (milliliters):	85.0
WT./VOL. OF ACETONE BLANK (milligrams/ml):	0.003
NET WEIGHT OF PARTIC. DUE TO ACETONE (grams):	0.0003
TOTAL FRONTHALF PARTICULATE MATTER (grams):	0.0117

BACKHALF PARTICULATE MATTER MASS LOADING

"C" SECTION - CONDENSER PARTICULATE	#150-990
TARE WEIGHT OF BEAKER (grams):	64.9955
FINAL WEIGHT OF BEAKER (grams):	65.0013
NET WEIGHT OF PARTIC. MATTER (grams):	0.0058
TOTAL VOLUME OF WATER (milliliters):	650.0
VOLUME OF WATER CONDENSED (milliliters):	392.9
NET VOLUME OF WATER FOR BLANK (milliliters):	257.1
WT./VOL. OF WATER BLANK (milligrams/ml):	0.001
NET WEIGHT OF PARTIC. DUE TO WATER (grams):	0.0003
"Cx" SECTION - HYDROCARBON EXTRACTION	#150-969
TARE WEIGHT OF BEAKER (grams):	67.1516
FINAL WEIGHT OF BEAKER (grams):	67.1726
NET WEIGHT OF PARTIC. MATTER (grams):	0.0210
TOTAL VOLUME OF CH2Cl2 (milliliters):	150.0
WT./VOL. OF CH2Cl2 BLANK (milligrams):	0.000
NET WEIGHT OF PARTIC. DUE TO CH2Cl2 (grams):	0.0000
"D" SECTION - ACETONE RINSE OF CONDENSER	#150-115
TARE WEIGHT OF BEAKER (grams):	69.0472
FINAL WEIGHT OF BEAKER (grams):	69.0551
NET WEIGHT OF PARTIC. MATTER (grams):	0.0079
TOTAL VOLUME OF ACETONE (milliliters):	60.0
WT./VOL. OF ACETONE BLANK (milligrams/ml):	0.003
NET WEIGHT OF PARTIC. DUE TO ACETONE (grams):	0.0002
TOTAL BACKHALF PARTICULATE MATTER (grams):	0.0343
TOTAL WEIGHT OF PARTICULATE MATTER (grams):	0.0460

APPENDIX

~~SOURCE~~ ~~TEST~~ OBSERVATION CHECKLIST
ASPHALT [redacted] PLANTS ~~WITH BAGHOUSE~~

Client WATSON ASPHALT PAVING CO., INC. Date 9/21/90

Location 19220 NE 80th, Redmond, WA

Process Information

Type of Plant Drum Mix

Manufacturer CMI

Model PVM-10X Constructed/Installed 3/1/90

Identification No. 51241 Date Last Tested n/a

Operation Personnel Bill SNyder

Process Rate 300* Tons/Hr Discharge Temp 290 °F

Type of Fuel Natural gas Firing Rate 290 ft3/ton ~~XXXXXXX~~

A/C Injection Location 2/3 down drum front burner

Fines In Gravel (-200 mesh) 5.5%

Gravel Moisture 5.0 % Asphalt Type AR4000W

Density - #/Gal Flash Point - °F

Control Equipment

Manufacturer CMI Model SAF-3630

Bag Material 14OZ Nomax #Bags 650 Bag Size 6"x15.5 ft.

Date Bags Last Changed 2/1/90 Air/Cloth Ratio see mtd. 5

Type of Bag Cleaning pulse jet

Baghouse Press ΔP = ≈2-3.5 "H_2O Static Press ____ "H_2O

Cleaning Cycle Duration 50MS, interval determined by ΔP

Disposition of Collected Dust Return to agg. dryer/by air blower

Additional Information

Sketch of System

* ≈ 87% virgin aggregate
≈ 13% R.A.P.

Authorized Signature

SAF 3630 BAGHOUSE & HOPPER ASSEMBLY SAF-003630-105

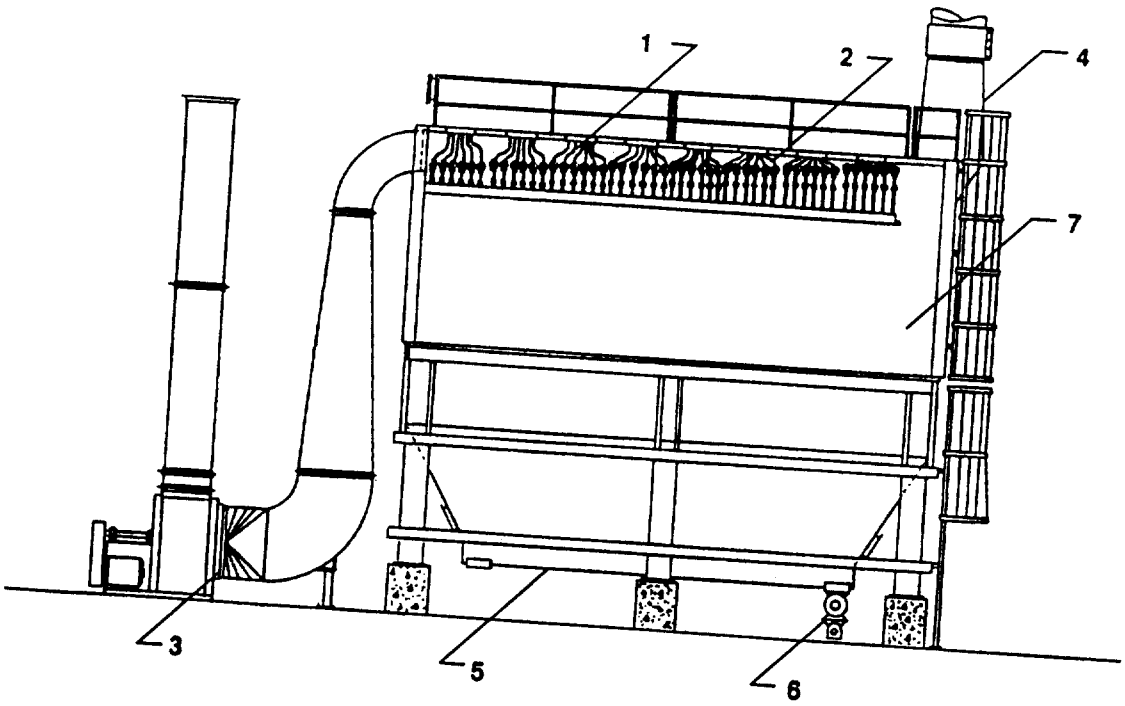

ITEM	PART NO.	DESCRIPTION	QTY.
	SAF 003630 105	SAF-3630 Baghouse & Hopper Assembly	
1.	01020 - 1190855	Basic Blowpipes	1
2.	05020 - 1190855	Additional Blowpipes	1
3.	08010 - 1190805	#542 Blower, Duct Assembly	1
4.	06010 - 1190865	Intake Duct Assembly	1
5.	05889 - 10S2A01	Hopper w/ Screw Assembly	1
6.	07010 - 1190140	Pneumatic Dust System	1
7.	01010 - 1190845	Baghouse Assembly	1
8.	02010 - 1190520	* Auger Cover Assembly	1
9.	03688 - 05S1W01	* Leg Extension (Corner)	1
10.	03688 - 05S1W02	* Leg Extension (Center)	4
		* NOT SHOWN	2

CROSS SECTIONAL AREA

Sample Point	Distance (inches)
1	4.25
2	12.75
3	21.25
4	29.75
5	38.25

Port	Distance (inches)
A	5.73
B	17.19
C	28.65
D	40.11
E	51.57

STACK DIMENSIONS

57.25 x 42.5 inch rectangular stack

Five (5) ports located along 57.25 inch side

A = 51 inches

B = 254 inches

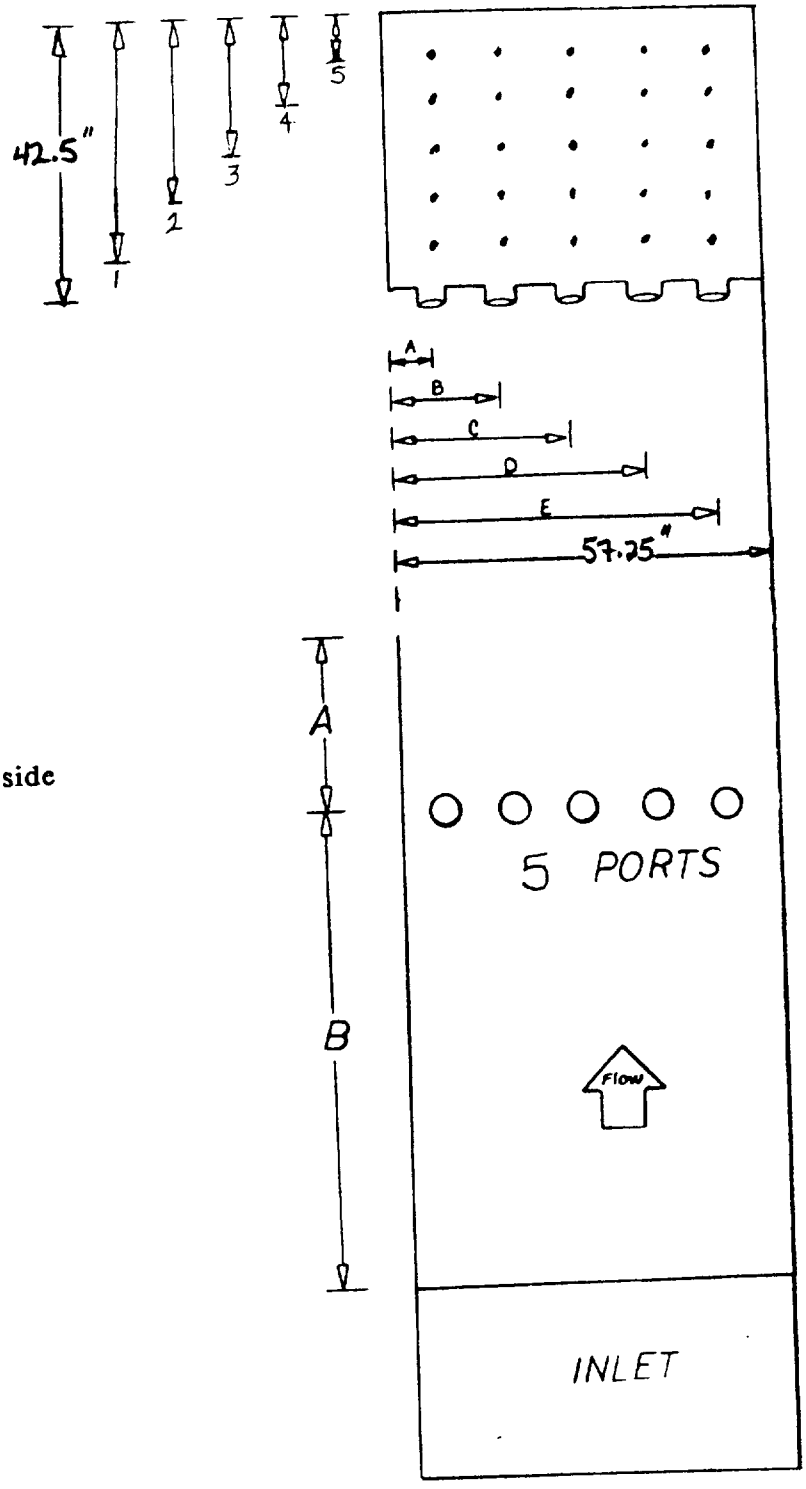

Figure 1. Location of sample ports and traverse points at the scrubber outlet.

METHOD 1 - LOCATION OF TRAVERSE POINTS

Circular Stacks

TRAVERSE POINT	DISTANCE, % of diameter
1	4.4
2	14.7
3	29.5
4	70.5
5	85.3
6	95.6

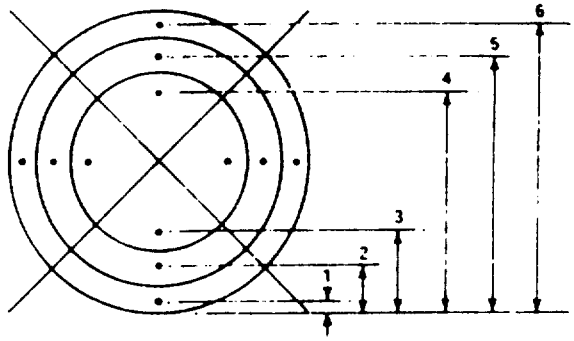

Figure 1-3. Example showing circular stack cross section divided into 12 equal areas, with location of traverse points indicated.

TABLE 1-2. LOCATION OF TRAVERSE POINTS IN CIRCULAR STACKS

[Percent of stack diameter from inside wall to traverse point]

Traverse point number on a diameter	Number of traverse points on a diameter—											
	2	4	6	8	10	12	14	16	18	20	22	24
1	14.6	6.7	4.4	3.2	2.6	2.1	1.8	1.6	1.4	1.3	1.1	1.1
2	85.4	25.0	14.6	10.5	8.2	6.7	5.7	4.9	4.4	3.9	3.5	3.2
3		75.0	29.6	19.4	14.6	11.8	9.9	8.5	7.5	6.7	6.0	5.5
4		93.3	70.4	32.3	22.6	17.7	14.6	12.5	10.9	9.7	8.7	7.9
5			85.4	67.7	34.2	25.0	20.1	16.9	14.6	12.9	11.6	10.5
6			95.6	80.6	65.8	35.6	26.9	22.0	18.8	16.5	14.6	13.2
7				89.5	77.4	64.4	36.6	28.3	23.6	20.4	18.0	16.1
8				96.8	85.4	75.0	63.4	37.5	29.6	25.0	21.8	19.4
9					91.8	82.3	73.1	62.5	38.2	30.6	26.2	23.0
10					97.4	88.2	79.9	71.7	61.8	38.8	31.5	27.2
11						93.3	85.4	78.0	70.4	61.2	39.3	32.3
12						97.9	90.1	83.1	76.4	66.4	60.7	39.8
13							94.3	87.5	81.2	75.0	68.5	60.2
14							98.2	91.5	85.4	79.6	73.8	67.7
15								95.1	89.1	83.5	78.2	72.6
16								98.4	92.5	87.1	82.0	77.0
17									95.6	90.3	85.4	80.6
18									98.6	93.3	88.4	83.9

Rectangular Stacks

For a rectangular cross section, an equivalent diameter (D_e) shall be calculated from the following equation, to determine the upstream and downstream distances:

$$D_e = \frac{2LW}{(L+W)}$$

where L = length and W = width.

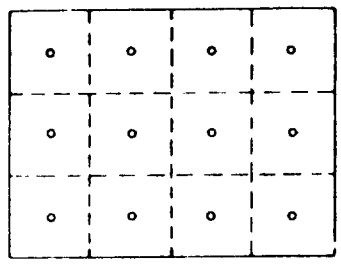

Figure 1-4. Example showing rectangular stack cross section divided into 12 equal areas, with a traverse point at centroid of each area.

METHOD 1 - MINIMUM NUMBER OF TRAVERSE POINTS

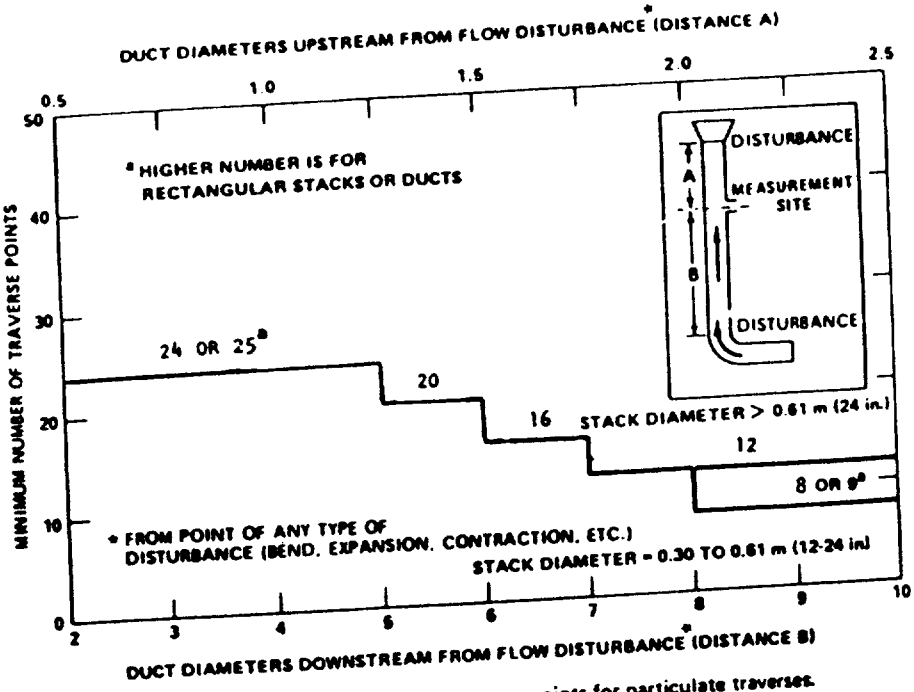

Figure 1-1. Minimum number of traverse points for particulate traverses.

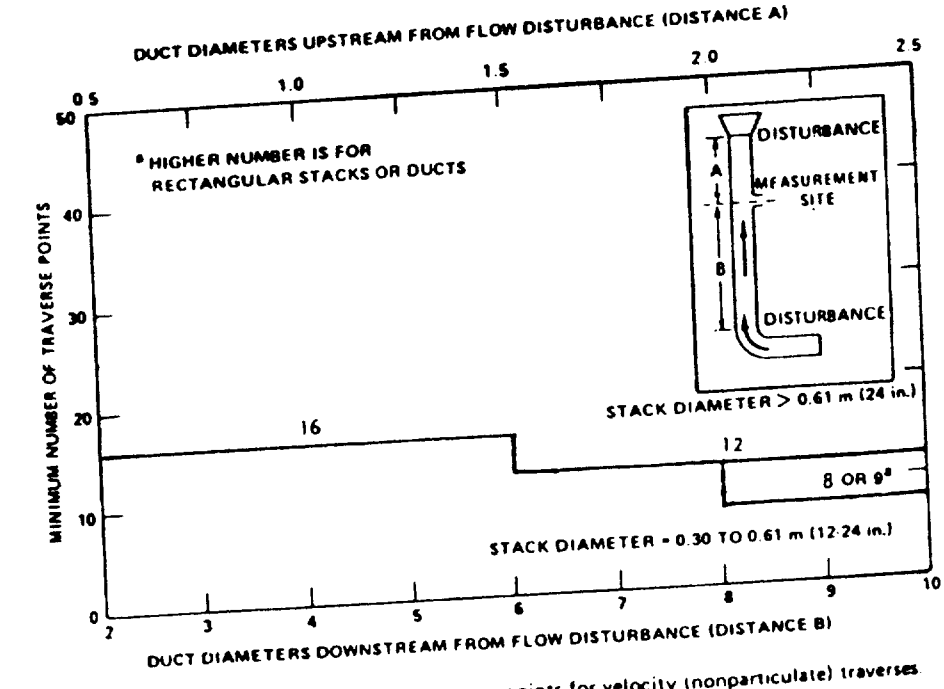

Figure 1-2. Minimum number of traverse points for velocity (nonparticulate) traverses.

METHOD 2 - STACK GAS VELOCITY AND VOLUMETRIC FLOW CALCULATIONS

5.1 Nomenclature.

A = Cross-sectional area of stack, m^2 (ft^2).
B_{ws} = Water vapor in the gas stream (from Method 5 or Reference Method 4), proportion by volume.
C_p = Pitot tube coefficient, dimensionless.
K_p = Pitot tube constant,

$$34.97 \frac{m}{sec}\left[\frac{(g/g\text{-mole})(mm\ Hg)}{(°K)(mm\ H_2O)}\right]^{1/2}$$

for the metric system and

$$85.49 \frac{ft}{sec}\left[\frac{(lb/lb\text{-mole})(in.\ Hg)}{(°R)(in.\ H_2O)}\right]^{1/2}$$

for the English system.

M_d = Molecular weight of stack gas, dry basis (see Section 3.6) g/g-mole (lb/lb-mole).
M_s = Molecular weight of stack gas, wet basis, g/g-mole (lb/lb-mole).

$$= M_d(1 - B_{ws}) + 18.0\ B_{ws}$$

Eq. 2-5

P_{bar} = Barometric pressure at measurement site, mm Hg (in. Hg).
P_g = Stack static pressure, mm Hg (in. Hg).
P_s = Absolute stack gas pressure, mm Hg (in. Hg).

$$= P_{bar} + P_g$$

Eq. 2-6

Eq. 2-6

P_{std} = Standard absolute pressure, 760 mm Hg (29.92 in. Hg).
Q_{std} = Dry volumetric stack gas flow rate corrected to standard conditions, dscm/hr (dscf/hr).
t_s = Stack temperature, °C (°F).
T_s = Absolute stack temperature, °K, (°R).

$$= 273 + t_s \text{ for metric.}$$

Eq. 2-7

$$= 460 + t_s \text{ for English.}$$

Eq. 2-8

T_{std} = Standard absolute temperature, 293 °K (528° R).
v_s = Average stack gas velocity, m/sec (ft/sec).
Δ_p = Velocity head of stack gas, mm H_2O (in. H_2O).
3,600 = Conversion factor, sec/hr.
18.0 = Molecular weight of water, g/g-mole (lb/lb-mole).

5.2 Average Stack Gas Velocity.

$$v_s = K_p C_p (\sqrt{\Delta p})_{avg} \sqrt{\frac{T_{s(avg)}}{P_s M_s}}$$

Equation 2-9

5.3 Average Stack Gas Dry Volumetric Flow Rate.

$$Q_{std} = 3{,}600(1 - B_{ws}) v_s A \left(\frac{T_{std}}{T_{s\ (avg)}}\right)\left(\frac{P_s}{P_{std}}\right)$$

Eq. 2-10

METHOD 3 - MOLECULAR WEIGHT AND EXCESS AIR CALCULATIONS

6.1 Nomenclature.

M_d = Dry molecular weight, g/g-mole (lb/lb-mole).
%EA = Percent excess air.
$\%CO_2$ = Percent CO_2 by volume (dry basis).
$\%O_2$ = Percent O_2 by volume (dry basis).
%CO = Percent CO by volume (dry basis).
$\%N_2$ = Percent N_2 by volume (dry basis).
0.264 = Ratio of O_2 to N_2 in air, v/v.
0.280 = Molecular weight of N_2 or CO, divided by 100.
0.320 = Molecular weight of O_2 divided by 100.
0.440 = Molecular weight of CO_2, divided by 100.

6.2 Percent Excess Air. Calculate the percent excess air (if applicable), by substituting the appropriate values of percent O_2, CO, and N_2 (obtained from Section 4.1.3 or 4.2.4) into Equation 3-1.

$$\%\ EA = \frac{\%O_2 - 0.5\%\ CO}{0.264\%\ N_2(\%O_2 - 0.5\%\ CO)} \times 100$$

Eq. 3-1

NOTE: The equation above assumes that ambient air is used as the source of O_2 and that the fuel does not contain appreciable amounts of N_2 (as do coke oven or blast furnace gases). For those cases when appreciable amounts of N_2 are present (coal, oil, and natural gas do not contain appreciable amounts of N_2) or when oxygen enrichment is used, alternate methods, subject to approval of the Administrator, are required.

6.3 Dry Molecular Weight. Use Equation 3-2 to calculate the dry molecular weight of the stack gas

$$M_d = 0.440(\%CO_2) + 0.320(\%O_2) + 0.280(\%N_2 + \%CO)$$

Eq. 3-2

METHOD 4 - STACK GAS MOISTURE CALCULATIONS

2.3.1 Nomenclature.

B_{ws} = Proportion of water vapor, by volume, in the gas stream.

M_w = Molecular weight of water, 18.0 g/g-mole (18.0 lb/lb-mole).

P_m = Absolute pressure (for this method, same as barometric pressure) at the dry gas meter, mm Hg (in. Hg).

P_{std} = Standard absolute pressure, 760 mm Hg (29.92 in. Hg).

R = Ideal gas constant, 0.06236 (mm Hg) (m^3)/(g-mole) (°K) for metric units and 21.85 (in. Hg) (ft^3)/(lb-mole) (°R) for English units.

T_m = Absolute temperature at meter, °K (°R).

T_{std} = Standard absolute temperature, 293° K (528°R).

V_m = Dry gas volume measured by dry gas meter, dcm (dcf).

ΔV_m = Incremental dry gas volume measured by dry gas meter at each traverse point, dcm (dcf).

$V_{m(std)}$ = Dry gas volume measured by the dry gas meter, corrected to standard conditions, dscm (dscf).

$V_{wc(std)}$ = Volume of water vapor condensed corrected to standard conditions, scm (scf).

$V_{wsg(std)}$ = Volume of water vapor collected in silica gel corrected to standard conditions, scm (scf).

V_f = Final volume of condenser water, ml.

V_i = Initial volume, if any, of condenser water, ml.

W_f = Final weight of silica gel or silica gel plus impinger, g.

W_i = Initial weight of silica gel or silica gel plus impinger, g.

Y = Dry gas meter calibration factor.

ρ_w = Density of water, 0.9982 g/ml (0.002201 lb/ml).

2.3.2 Volume of Water Vapor Condensed.

$$V_{wc(std)} = \frac{(V_f - V_i)\rho_w R T_{std}}{P_{std} M_w}$$

$$= K_1 (V_f - V_i)$$

Eq. 4-1

K_1 = 0.001333 m^3/ml for metric units
= 0.04707 ft^3/ml for English units

2.3.3 Volume of Water Vapor Collected in Silica Gel.

$$V_{wsg(std)} = \frac{(W_f - W_i) R T_{std}}{P_{std} M_w}$$

$$= K_2 (W_f - W_i)$$

Eq. 4-2

Where:

K_2 = 0.001335 m^3/g for metric units
= 0.04715 ft^3/g for English units

2.3.4 Sample Gas Volume.

$$V_{m(std)} = V_m Y \frac{(P_m)(T_{std})}{(P_{std})(T_m)}$$

$$= K_3 Y \frac{V_m P_m}{T_m}$$

Eq. 4-3

Where:

K_3 = 0.3858 °K/mm Hg for metric units
= 17.64 °R/in. Hg for English units

NOTE: If the post-test leak rate (Section 2.2.6) exceeds the allowable rate, correct the value of V_m in Equation 4-3, as described in Section 6.3 of Method 5.

2.3.5 Moisture Content.

$$B_{ws} = \frac{V_{wc(std)} + V_{wsg(std)}}{V_{wc(std)} + V_{wsg(std)} + V_{m(std)}}$$

Eq. 4-4

NOTE: In saturated or moisture droplet-laden gas streams, two calculations of the moisture content of the stack gas shall be made, one using a value based upon the saturated conditions (see Section 1.2), and another based upon the results of the impinger analysis. The lower of these two values of B_{ws} shall be considered correct.

METHOD 5 - PARTICULATE EMISSION CALCULATIONS - (1)

6.1 Nomenclature.

A_n = Cross-sectional area of nozzle, m^2 (ft^2).

B_{ws} = Water vapor in the gas stream, proportion by volume.

C_a = Acetone blank residue concentration, mg/g.

c_s = Concentration of particulate matter in stack gas, dry basis, corrected to standard conditions, g/dscm (g/dscf).

I = Percent of isokinetic sampling.

L_a = Maximum acceptable leakage rate for either a pretest leak check or for a leak check following a component change; equal to 0.0057 m^3/min (0.02 cfm) or 4 percent of the average sampling rate, whichever is less.

L_i = Individual leakage rate observed during the leak check conducted prior to the "i^{th}" component change (i = 1, 2, 3....n), m^3/min (cfm).

L_p = Leakage rate observed during the post-test leak check, m^3/min (cfm).

m_a = Mass of residue of acetone after evaporation, mg.

m_n = Total amount of particulate matter collected, mg.

M_w = Molecular weight of water, 18.0 g/g-mole (18.0 lb/lb-mole).

P_{bar} = Barometric pressure at the sampling site, mm Hg (in. Hg).

P_s = Absolute stack gas pressure, mm Hg (in. Hg).

P_{std} = Standard absolute pressure, 760 mm Hg (29.92 in. Hg).

R = Ideal gas constant, 0.06236 mm Hg-m^3/°K-g-mole (21.85 in. Hg-ft^3/°R-lb-mole).

T_m = Absolute average dry gas meter temperature (see Figure 5-2), °K (°R).

T_s = Absolute average stack gas temperature (see Figure 5-2), °K (°R).

T_{std} = Standard absolute temperature, 293° K (528° R).

V_a = Volume of acetone blank, ml.

V_{aw} = Volume of acetone used in wash, ml.

V_{lc} = Total volume of liquid collected in impingers and silica gel (see Figure 5-3), ml.

V_m = Volume of gas sample as measured by dry gas meter, dcm (dscf).

$V_{m(std)}$ = Volume of gas sample measured by the dry gas meter, corrected to standard conditions, dscm (dscf).

$V_{w(std)}$ = Volume of water vapor in the gas sample, corrected to standard conditions, scm (scf).

v_s = Stack gas velocity, calculated by Method 2, Equation 2-9, using data obtained from Method 5, m/sec (ft/sec).

W_a = Weight of residue in acetone wash, mg.

Y = Dry gas meter calibration factor.

ΔH = Average pressure differential across the orifice meter (see Figure 5-2), mm H_2O (in. H_2O).

ρ_a = Density of acetone, mg/ml (see label on bottle).

ρ_w = Density of water, 0.9982 g/ml (0.002201 lb/ml).

θ = Total sampling time, min.

θ_1 = Sampling time interval, from the beginning of a run until the first component change, min.

θ_i = Sampling time interval, between two successive component changes, beginning with the interval between the first and second changes, min.

θ_p = Sampling time interval, from the final (n^{th}) component change until the end of the sampling run, min.

13.6 = Specific gravity of mercury.

60 = Sec/min.

100 = Conversion to percent.

6.2 Average Dry Gas Meter Temperature and Average Orifice Pressure Drop. See data sheet (Figure 5-2).

6.3 Dry Gas Volume. Correct the sample volume measured by the dry gas meter to standard conditions (20° C, 760 mm Hg or 68° F, 29.92 in. Hg) by using Equation 5-1.

$$V_{m(std)} = V_m Y \left(\frac{T_{std}}{T_m}\right)\left[\frac{P_{bar} + \frac{\Delta H}{13.6}}{P_{std}}\right]$$

$$= K_1 V_m Y \frac{P_{bar} + (\Delta H/13.6)}{T_m}$$

Equation 5-1

Where;

K_1 = 0.3858 °K/mm Hg for metric units

= 17.64 °R/in. Hg for English units

NOTE: Equation 5-1 can be used as written unless the leakage rate observed during any of the mandatory leak checks (i.e., the post-test leak check or leak checks conducted prior to component changes) exceeds L_a. If L_p or L_i exceeds L_a, Equation 5-1 must be modified as follows:

(a) Case I. No component changes made during sampling run. In this case, replace V_m in Equation 5-1 with the expression:

$$[V_m - (L_p - L_a)\theta]$$

(b) Case II. One or more component changes made during the sampling run. In this case, replace V_m in Equation 5-1 by the expression:

$$\left[V_m - (L_1 - L_a)\theta_1 - \sum_{i=2}^{n} (L_i - L_a)\theta_i - (L_p - L_a)\theta_p\right]$$

and substitute only for those leakage rates (L_i or L_p) which exceed L_a.

6.4 Volume of Water Vapor.

METHOD 5 - PARTICULATE EMISSION CALCULATIONS - (2)

Equation 5-1

$$V_{w(std)} = V_{lc}\left(\frac{\rho_w}{M_w}\right)\left(\frac{RT_{std}}{P_{std}}\right) = K_3 V_{lc}$$

Where:

$K_3 = 0.001333$ m³/ml for metric units

$= 0.04707$ ft³/ml for English units.

6.5 Moisture Content.

$$B_{ws} = \frac{V_{w(std)}}{V_{m(std)} + V_{w(std)}}$$

Eq. 5-3

NOTE: In saturated or water droplet-laden gas streams, two calculations of the moisture content of the stack gas shall be made, one from the impinger analysis (Equation 5-3), and a second from the assumption of saturated conditions. The lower of the two values of B_{ws} shall be considered correct. The procedure for determining the moisture content based upon assumption of saturated conditions is given in the Note of Section 1.2 of Method 4. For the purposes of this method, the average stack gas temperature from Figure 5-2 may be used to make this determination, provided that the accuracy of the in-stack temperature sensor is ±1° C (2° F).

6.6 Acetone Blank Concentration.

$$C_a = \frac{m_a}{V_a \rho_a}$$ Eq. 5-4

6.7 Acetone Wash Blank.

$$W_a = C_a V_{aw} \rho_a$$ Eq. 5-5

6.8 Total Particulate Weight. Determine the total particulate catch from the sum of the weights obtained from Containers 1 and 2 less the acetone blank (see Figure 5-3).

NOTE: Refer to Section 4.1.5 to assist in calculation of results involving two or more filter assemblies or two or more sampling trains.

6.9 Particulate Concentration.

$$c_s = (0.001\ g/mg)\,(m_n / V_{m(std)})$$

Eq. 5-6

6.10 Conversion Factors:

From	To	Multiply by
acf	m³	0.02832
g/ft³	gr/ft³	15.43
g/ft³	lb/ft³	2.205×10^{-3}
g/ft³	g/m³	35.31

6.11 Isokinetic Variation.

6.11.1 Calculation From Raw Data.

$$I = \frac{100\ T_s[K_3 V_{lc} + (P_m / T_m)(P_{bar} + \Delta H/13.6)]}{60\theta v_s P_s A_n}$$

Eq. 5-7

Where:

$K_4 = 0.003454$ mm Hg − m³/ml − °K for metric units.

$= 0.002669$-in. Hg − ft³/ml − °R for English units.

6.11.2 Calculation From Intermediate Values.

$$I = \frac{T_s V_{m(std)} P_{std} 100}{T_{std} v_s \theta A_n P_s 60(1 - B_{ws})}$$

$$= K_4 \frac{T_s V_{m(std)}}{P_s V_s A_n \theta (1 - B_{ws})}$$

Equation 5-8

where:

$K_4 = 4.320$ for metric units

$= 0.09450$ for English units.

6.12 Acceptable Results. If 90 percent < I < 110 percent, the results are acceptable. If the particulate results are low in comparison to the standard, and I is over 110 percent or less than 90 percent, the Administrator may accept the results.

NOMENCLATURE
METHOD 5 CALCULATIONS

Vm_{std} = Volume of gas sample measured by the dry gas meter, corrected to standard conditions, dscm (dscf).

Y = Dry gas meter calibration factor

P_b = Barometric pressure at the sampling site, mm Hg (in. Hg)

H = Average pressure differential across the orifice meter, mm H_2O (in. H_2O)

T_m = Absolute average dry gas meter temperature, ° K (° R)

dscm = Dry standard cubic meters

dscf = Dry standard cubic feet

W_a = Weight of residue in acetone wash

M_a = Mass of residue of acetone after evaporation, mg

C_a = Acetone blank residue concentration, mg/g

V_a = Volume of acetone blank

V_{aw} = Volume of acetone used in wash, ml

M_n = Total amount of particulate matter collected, mg

C_s = Concentration of particulate matter in stack gas, dry basis, corrected to standard conditions, mg/dscm (gr/dscf)

gr/dscf = grains per dry standard cubic foot

Vw_{std} = Volume of water vapor in the gas sample, corrected to standard conditions, scm (scf)

B_{ws} = Water vapor in the gas stream, proportion by volume

M_d = Molecular weight of stack gas, g/g-mole on dry basis

M_s = Molecular weight of stack gas, g/g-mole on wet basis

V_s = Stack gas velocity, calculated by Method 2, Equation 2-9, using data obtained from Method 5, m/sec (ft/sec)

C_p = Pitot tube coefficient, dimensionless

Δ_p = Velocity head of stack gas, mm H_2O (in. H_2O)

P_s = Absolute stack gas pressure, mm Hg (in. Hg)

NOMENCLATURE (continued)
METHOD 5 CALCULATIONS

Q_{std} = Dry volumetric stack gas flow rate corrected to standard conditions, dscm/hr (dscf/hr)

dscf/min = dry standard cubic feet per minute (also identified as dcfm or scfm)

acfm = actual cubic feet per minute

I = Percent of isokinetic sampling

A_n = Cross-sectional area of nozzle, m^2 (ft^2)

SAMPLE CALCULATION SHEET
METHODS 1-5

CLIENT: Watson Asphalt Paving Co. DATE OF TEST: September 21, 1990

LOCATION: Redmond, WA Baghouse stack RUN #: 1-M5/Bit

Particulate Matter Emission Concentration - Equation 5-1

Vm_{std} = 17.647°R/"Hg * 60.537 ft^3 * .993 * (30.28 "Hg + (1.710 "H_2O/13.6))/(460 + 61.7° F)

= 61.827 dscf

dscm = 61.827 dscf/35.31 ft^3/m^3

= 1.751 dscm

Substitution of Equation 5-4 into 5-5

W_a = .3 mg * 100 ml / 85 ml

= 0.35 mg

M_n = (net weight filter catch) + (net weight "B" section) - Wa + Back-half

= 73.6 mg = 13.9 mg + 9.6 mg - 0.35 mg + 50.4 mg

C_s= (0.001 g/mg) * (15.43 grains/gram) * 73.6 mg / 61.827 dscf

= 0.018 gr/dscf (Equation 5-6)

gr/dscf @7% O_2 = _____ gr/dscf * (20.9% - 7%O_2)/(20.9% - _____ %O_2)

= _____ gr/dscf @ 7% O_2

gr/dscf @ 12% CO_2 = _____ gr/dscf * 12% / _____ %CO_2

= _____ gr/dscf @ 12% CO_2

mg/dscm = 73.6 mg/1.751 dscm

= 42.1 mg/dscm

Particulate Matter Emission Rate

pounds/hour = 0.018 gr/dscf * 2382.1 dscf/min * 60 min/hr * 1 lb/7000 grains

= 3.76 lb/hr

Moisture - Equation 5-2 and 5-3

Vw_{std} = 0.04715 ft^3/g * 572.0 grams of H_2O collected in impingers

= 26.97 scf

SAMPLE CALCULATION SHEET (continued)
METHODS 1-5

B_{ws} = (26.97 scf)/(26.97 scf + 61.827 dscf)

= 0.3037

%Moisture = 0.3037 * 100

= 30.37 %

Molecular weight - Equation 3-2

M_d = 0.440 * (5.4 $\%CO_2$) + 0.320 * (11.7 $\%O_2$) + 0.280 * (82.9 % CO + $\%N_2$)

M_d = 29.33 g/g-mole (dry)

M_s = 29.33 g/g-mole * (1 - .3037) + 18.0 * .3037

M_s = 25.89 g/g-mole (wet)

Stack gas velocity and volumetric flow rate - Equation 2-9 and 2-10

V_s = 85.49 * .842 * .6475 * $\sqrt{695.2°\ R}$ / 25.89 g/g-mole / 30.30 "Hg

V_s = 43.87 ft/sec (std)

Q_{sd} = 3600 * (1 - .3037) * 43.87 ft/sec * 16.91 ft^2 * (528° R/ 695.2 R) * (30.30 "Hg/ 29.92 "Hg)

= 1,430,529.5 dscf/hr / 60 min/hr

= 23842.1 dscf/min (dry standard cubic feet per minute)

acfm = 43.87 ft/sec * 16.91 ft^2 * 60 sec/min

= 44517.5 acfm (actual cubic feet per minute)

Isokinetic variation - Equation 5-8

I = 0.09450 * 61.827 dscf * 695.2° R/(30.30 "Hg * 43.87 ft/sec * 62.5 min * .0007629 ft^2 * (1 - .3037))

I = 92 %

All of the above numbered equations are from the 40 CFR 60 and assume English units.

SAMPLE CALCULATION SHEET (2)

Backhalf particulate

"C" Section

16.0 mg particulate in "C" Section beaker

800.0 ml of water in condensers, including rinses

550.3 ml of condensation in 1st, 2nd and 3rd bubblers (final weight - initial weight, assumes 1g/1ml water density)

249.7 ml of deionized, distilled water used in bubblers including rinses

0.001 mg/ml blank partic. = (0.1 mg H2O blank / 100 ml H2O)

0.25 mg of blank particulate

= 15.75 mg of "C" partic. = 16.0 mg of partic. in "C" - .25 mg of blank

"Cx" Section

19.2 mg of particulate in "Cx" Section beaker

0.0 mg/ml of blank partic. = (0.0 mg CH2Cl2 blank / 100 ml CH2Cl2)

0.0 mg of blank particulate = (150 ml * 0.0 mg/ml)

= 19.2 mg of "Cx" partic = 19.2 mg of partic in "Cx" - 00 mg of blank

"D" Section

15.6 mg of particulate in "D" Section beaker

.003 mg/ml of blank particulate (same as "B" Section)

0.15 mg of blank particulate = (50 ml * .003 mg/ml)

= 15.45 mg of "D" partic. = 15.6 mg of partic. in "D" - 0.15 mg of blank

Total Backhalf Particulate

+ 15.75 mg of "C" Section particulate

+ 19.2 mg of "Cx" Section particulate

+ 15.45 mg of "D" Section particulate

+ NA mg of Backhalf filter (if applicable)

= 50.40 mg of Backhalf particulate

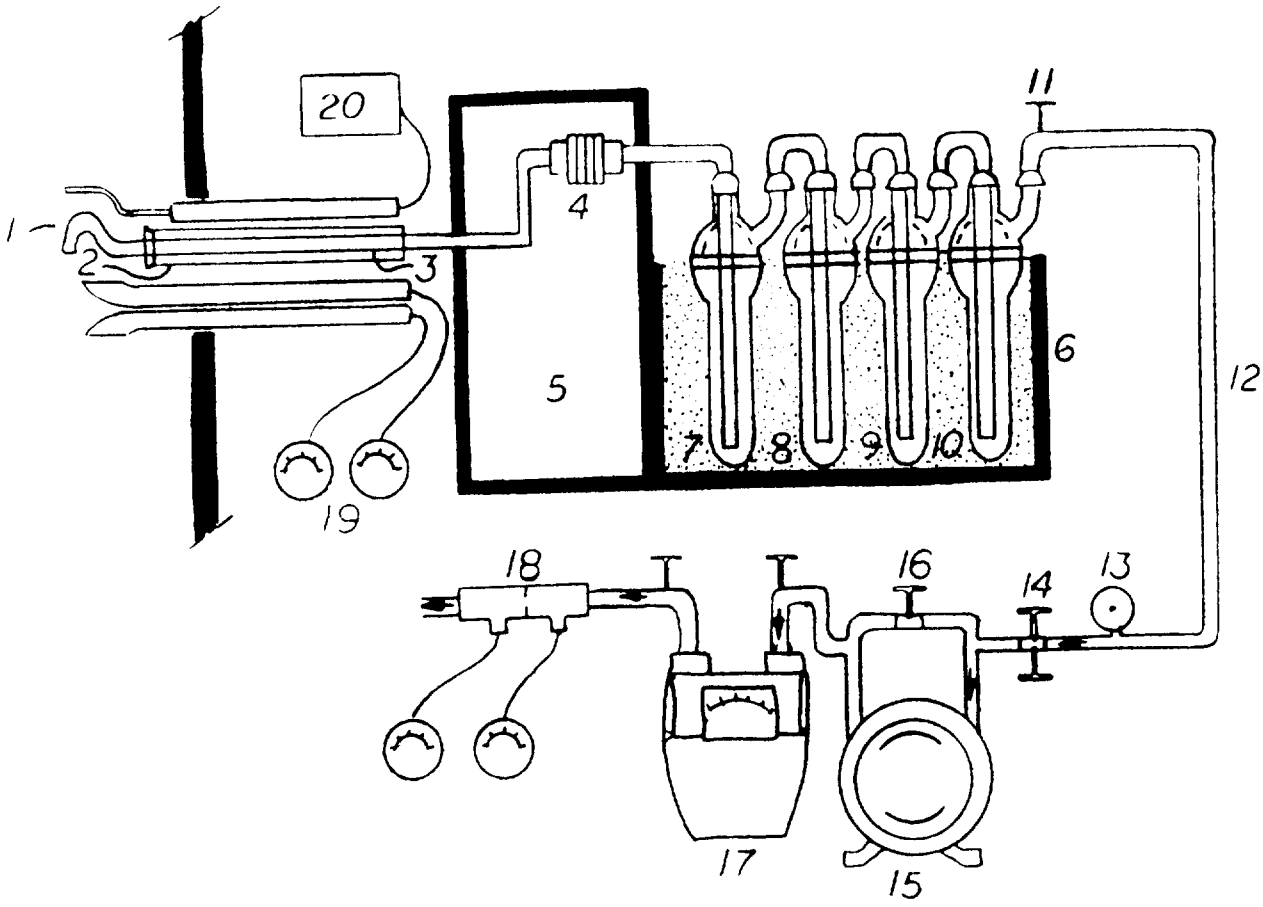

Figure . Method 5 Sample Train.

1. Sampling nozzle
2. Sampling probe sheath
3. Heated sample probe liner
4. Out of stack filter assembly
5. Heated filter compartment maintained at 248°F ± 25°F (or temperature specified in 40 CFR subpart)
6. Impinger case - contains ice during sampling
7. First impinger containing 100 ml H_2O
8. Modified Greenburg-Smith impinger containing 100 ml H_2O
9. Third impinger - empty
10. Fourth impinger containing indicating silica gel desiccant
11. Impinger exit gas temperature sensor
12. Umbilical cord - vacuum line
13. Vacuum gauge
14. Fine and coarse adjustment valves
15. Leak free pump
16. By-pass valve
17. Dry gas meter with inlet and outlet temperature sensors
18. Orifice meter with magnehelic gauges
19. S-type pitot tube with magnehelic gauges
20. Fluke multi-channel digital thermocouple indicator

AMTEST

DRY GAS METER CALIBRATION
AM TEST, INC. - AIR QUALITY DIVISION

METER BOX #: JAG RED #1
CALIBRATION DATE: FEBRUARY 23, 1989
LOCATION: STATE OF WASHINGTON DEPARTMENT OF ECOLOGY
METHOD OF CALIB.: SPIROMETER

TOTAL TIME min	DELTA H "H2O	METER VOL V1 cf	METER VOL V2 cf	TEMP OUT deg F	TEMP IN deg F	BARO. PRES. "Hg	VOLUME METER dscf	SPIRO H1 cm	SPIRO H2 cm	SPIRO TEMP deg C	VOLUME SPIRO dscf	Y FACTOR	KM^2	DELTA Hg
4.0	1.0	408.200	411.341	80.0	76.0	29.84	3.090	80.0	13.5	22	3.111	0.993	0.99	0.927
4.0	1.0	412.300	415.425	81.5	76.5	29.84	3.069	80.0	14.0	22	3.088	0.994	0.98	0.938
5.0	0.5	415.800	418.552	80.5	77.0	29.84	2.700	80.0	21.8	22	2.723	0.992	0.97	0.946
3.5	1.5	419.200	422.505	79.5	77.0	29.84	3.254	80.0	10.1	22	3.270	0.995	0.96	0.961
AVERAGE												0.993	0.98	0.943

AT

TRAVERSE SAMPLING DATA

Page 1 of _____

00356

Client WHITCO
Date 7-21-76
Sample Location
EQ Shredder Stack
Operators TAS
Sample Box # Reserve
Run# 1-AM5 (Cold)

EQUIPMENT CHECKS

Initial/Final

Leak Rate Cfm .00 / .003
Leak Test Vac 20 / 20
_____ Pitots, Pretest
_____ Pitots, Postest
_____ Orsat Sampling System
_____ Tedlar Bag
_____ Thermocouple @ _____ °F

SCHEMATIC TRAVERSE LAYOUT

Stack Diameter 57.25 x 42.5 points
Distance Upstream 254"
Distance Downstream 51"

Filter #1328 tare _____ mgs

	Final Wt.	Initial Wt.	Net Wt.
#1 Bubbler	780.0	528.1	_____
#2 Impinger	783.3	592.8	_____
#3 Bubblet	488.0	480.1	_____
#4 Silica Gel	721.7	750.0	_____

TOTAL WATER VOLUME 572.0

Start Time 0824
Stop Time 1413
Barometric 30.28
Pressure "Hg _____ mm
Static Pres "H_2O +.30
Production Rate _____

NOMOGRAPH SETUP

% Moisture _____
Meter Temp. _____
Stack Temp. _____
ΔH@ .943 Y .993
Pitot# _____ Side# _____
Cp .842
Nozzle Diameter .374
K Factor _____
Reference ΔP _____

F = 1.7
CO_2 = 5.4
O_2 %

Sample Point	Elap Time Min.	Dry Gas Meter Reading Cu. Ft.	Pitot Reading (ΔP), In. H_2O	Orifice Setting (ΔH), In H_2O Ideal	Orifice Setting (ΔH), In H_2O Actual	Gas Meter Temp °F In	Gas Meter Temp °F Out	Pump Vacuum In. Hg Gauge	Filter Box Temp °F	Imp. Exit Temp °F	Stack Temp °F	O_2 %
A 1	0	891.563	.18	.74	.74	52	52	3	265	60	227	
2			.13	.53	.53	53	52	3	268	42	240	11.7
3	5		.13	.53	.53	54	52	3	265	43	245	11.8
4			.19	.78	.78	57	53	3½	268	42	223	12.0
5	10		.25	1.02	1.02	57	54	4	265	43	220	11.9
B 1			.23	.94	.94	58	55	4	273	46	235	
2	15		.21	.86	.86	58	53	4	266	45	212	11.6
3			.21	.86	.86	60	58	4	264	44	226	11.7
4	20		.30	1.22	1.22	62	56	5	263	45	235	12.0
5			.50	2.04	2.04	60	58	7½	272	45	236	12.2
C 1	25		.26	1.18	1.18	58	58	5½	273	49	162	
2			.45	1.96	1.96	61	59	9	267	45	206	12.2
3	30		.60	2.53	2.53	63	58	1	271	46	222	11.3
4			.70	2.91	2.92	64	57	1	267	50	232	11
5	35		.70	2.91	2.91	64	59	1	271	52	235	11.5
D 1			.30	1.23	1.23	64	60	2	270	53	248	
2	40		.65	2.66	2.66	64	60	2	267	52	249	11
3			.70	2.80	2.80	70	60	2	267	54	253	11
4			1.0	4.17	2.80	72	62	13	264	52	254	11.5
5			1.0	4.17	2.80	76	63	13	266	60	253	11.8
E 1	45		.20	.82	.82	69	64	5	261	64	241	
2			.40	1.63	1.63	71	64	7½	261	60	253	11.6
3	55		.80	3.27	3.27	75	65	13	267	58	256	11.5
4			.60	2.45	2.45	77	65	12	263	59	251	11.5
5	60		.60	2.45	2.45	78	66	12	263	59	249	11.5

952.100

11.2 Vol

AT

00357

TRAVERSE SAMPLING DATA

Page 1 of _____

Client WATSON - [illegible]
Date 9-21-90
Sample Location BAGHOUSE EXHAUST STACK
Operators JAO
Sample Box # Red 2
Run# 2 MS (CH)

EQUIPMENT CHECKS

Initial/Final

Leak Rate Cfm .01 / .004
Leak Test Vac 19 / 17

✓ Pitots, Pretest
✓ Pitots, Postest
✓ Orsat Sampling System
✓ Tedlar Bag
✓ Thermocouple @ _____ °F

SCHEMATIC TRAVERSE LAYOUT

Stack Diameter _____
Distance Upstream _____
Distance Downstream _____

Filter # 1329 tare _____ mgs

	Final Wt.	Initial Wt.	Net Wt.
#1 Bubbler	777.6	589.9	
#2 Impinger	802.9	616.9	
#3 Bubbler	557.3	518.0	
#4 Silica Gel	763.8	747.6	

TOTAL WATER VOLUME 428.2

Start Time [illegible]
Stop Time 1101
Barometric 30.32"
Pressure "Hg 770 mm
Static Pres "H_2O 2.30
Production Rate _____

NOMOGRAPH SETUP

% Moisture _____
Meter Temp. _____
Stack Temp. _____
ΔH@ .943 Y .993
Pitot# _____ Side# _____
Cp .842
Nozzle Diameter .315
K Factor _____
Reference ΔP _____

Sample Point	Elap Time Min.	Dry Gas Meter Reading Cu. Ft.	Pitot Reading (ΔP), In. H_2O	Orifice Setting (ΔH), In H_2O Ideal	Orifice Setting (ΔH), In H_2O Actual	Gas Meter Temp °F In	Gas Meter Temp °F Out	Pump Vacuum In. Hg Gauge	Filter Box Temp °F	Imp. Exit Temp °F	Stack Temp °F	Ch = 54 O_2 %
A 1	0	956.743	.10	.20	.20	68	68	2	235	63	207	
2			.10	.20	.20	68	68	2	235	59	221	12.4
3	5		.15	.30	.30	70	68	2	270	58	231	12.0
4			.19	.37	.37	71	69	2½	265	56	238	11.7
5	10		.25	.48	.48	73	69	3	261	56	241	11.6
B 1			.25	.48	.48	75	70	3	269	61	242	
2	15		.27	.52	.52	75	71	3	265	56	251	11.7
3			.30	.57	.57	77	72	3½	268	56	253	11.7
4	20		.30	.57	.57	78	72	3½	255	57	253	11.8
5			.40	.76	.76	79	73	4	259	57	252	11.6
C 1	25		.30	.57	.57	78	74	3½	270	63	249	
2			.40	.76	.76	80	75	4	268	57	253	11.8
3	30		.55	1.04	1.04	82	75	5	267	55	254	11.6
4			.70	1.33	1.33	83	76	6	263	56	254	11.6
5	35		.70	1.33	1.33	85	76	6	266	59	253	11.6
D 1			.30	.57	.57	81	77	4	263	67	253	
2	40		.70	1.34	1.34	84	78	6	270	60	255	11.7
3			1.0	1.91	1.91	87	78	9	265	57	256	11.7
4	45		1.0	1.91	1.91	90	79	9	259	59	257	11.6
5			.90	1.75	1.75	92	80	8½	262	61	255	11.6
E 1	50		.25	.48	.48	87	81	3½	268	66	249	
2			.40	.77	.77	88	82	4½	269	62	256	11.5
3	55		.90	1.74	1.74	90	83	8	268	59	258	11.5
4			1.1	2.12	2.12	92	83	10	259	60	258	11.6
5	60		1.1	2.12	2.12	94	84	10	260	63	260	11.6

11.7 [illegible]

[illegible] 1001.866 [illegible] $(\sqrt{\Delta P})^2$ ΔH T[illegible] T[illegible]

AT

TRAVERSE SAMPLING DATA

Page 1 of _____

Client WATSON - REDMOND
Date 9-21-90
Sample Location RACK #3
Exhaust Stack
Operators JAG
Sample Box # Red 3
Run # 3-M5/Bri

Start Time 1201
Stop Time 1314
Barometric Pressure "Hg 30.32" 770 mm
Static Pres "H_2O -1.30
Production Rate _____

EQUIPMENT CHECKS

Initial/Final

Leak Rate Cfm .024 .019
Leak Test Vac 18 / 17
___ Pitots, Pretest
___ Pitots, Postest
___ Orsat Sampling System
___ Tedlar Bag
___ Thermocouple @ ____ °F

SCHEMATIC TRAVERSE LAYOUT

Stack Diameter _____
Distance Upstream _____
Distance Downstream _____

Filter # 124 tare ____ mgs
125 -

	Final Wt.	Initial Wt.	Net Wt.
#1 Bubbler	756.5	577.0	____
#2 Impinger	832.1	631.4	____
#3 Bubbler	534.7	522.0	____
#4 Silica Gel	779.5	761.8	____

TOTAL WATER VOLUME 410.6

NOMOGRAPH SETUP

% Moisture _____
Meter Temp. _____
Stack Temp. _____
ΔH@ .993 Y .993
Pitot# _____ Side# _____
Cp .842
Nozzle Diameter .315
K Factor _____
Reference ΔP _____

O_2 = 5.2

Sample Point	Elap Time Min.	Dry Gas Meter Reading Cu. Ft.	Pitot Reading (ΔP), In. H_2O	Orifice Setting (ΔH), In H_2O Ideal	Orifice Setting (ΔH), In H_2O Actual	Gas Meter Temp °F In	Gas Meter Temp °F Out	Pump Vacuum In. Hg Gauge	Filter Box Temp °F	Imp. Exit Temp °F	Stack Temp °F	O_2
A 1	0	7.196	.10	.21	.21	85	85	2	254	68	185	
2			.10	.21	.21	88	84	2	268	67	208	12.2
3	5		.13	.27	.27	86	88	2	245	65	214	12.2
4			.18	.37	.37	86	85	2½	264	63	220	12.0
5	10		.25	.51	.51	84	86	3	259	61	224	11.6
B 1			.20	.41	.41	87	86	3	261	65	233	
2	15		.25	.51	.51	88	87	3	265	61	241	11.5
3			.25	.51	.51	89	87	3	272	61	245	11.5
4	20		.30	.60	.60	91	88	3½	272	61	246	11.6
5			.40	.80	.80	92	88	4	269	60	244	11.8
C 1	25		.30	.60	.60	92	90	3½	267	68	245	
2			.40	.80	.80	94	90	4	263	61	246	12.0
3	30		.70	1.4	1.4	97	91	6	269	59	247	12.2
4			.70	1.4	1.4	98	92	6	270	60	247	12.0
5	35		.70	1.4	1.4	98	94	6	263	64	243	12.2
D 1			.35	.69	.69	98	94	4	260	68	241	
2	40		.70	1.4	1.4	99	95	6	269	66	244	12.4
3			.80	1.6	1.6	101	95	7	268	64	246	12.3
4	45		.9	1.8	1.8	103	96	7½	268	65	246	12.3
5			.9	1.8	1.8	104	97	8	270	66	244	12.2
E 1	50		.70	1.40	1.40	101	97	3	265	68	242	
2			.80	1.60	1.60	101	98	5	264	66	245	12.3
3	55		.8	1.7	1.7	104	98	5½	270	64	247	12.3
4			1.0	2.0	2.0	106	99	9	265	63	247	12.2
5	60		1.0	2.0	2.0	107	100	9	269	64	248	12.3
END	63.5	52.684			.968							
		VAC. 4.0	AVG		ΔH	T_m 93.2				T_s		