Note: This is a reference cited in *AP 42, Compilation of Air Pollutant Emission Factors, Volume I Stationary Point and Area Sources.* AP42 is located on the EPA web site at www.epa.gov/ttn/chief/ap42/

The file name refers to the reference number, the AP42 chapter and section. The file name "ref02_c01s02.pdf" would mean the reference is from AP42 chapter 1 section 2. The reference may be from a previous version of the section and no longer cited. The primary source should always be checked.

SAN DIEGO AIR POLLUTION CONTROL DISTRICT, 9150 CHESAPEAKE DRIVE, SAN DIEGO, CA. 92123

SOURCE TEST OF PARTICULATE EMISSIONS TO THE ATMOSPHERE

TEST SITE: V.R. Dennis-Canyon Rock Company
7500 Mission Gorge Road
San Diego, CA 92120

TEST #: 91351 P.O.# 254 TEST DATE: 12/16/91

Type of plant (Asphalt /Perlite / Combustion) : asphalt

UNIT TESTED: Hot Mix Asphalt Plant

EQUIPMENT: Wet Scrubber

TESTED BY:	David Shina & Gary Smith	DATE: 12/16/91
SITE PERSONNEL:	Gary Dennis	DATE: 12/16/91
APCD ENGINEER:	Andrew Segal	DATE: 12/16/91
LAB ANALYSIS BY:	David Shina	DATE: 1/8/92
REPORT BY:	David Shina	DATE: 1/8/92
REVIEWED BY:	Linda Twaddle	DATE: 2-6-92
APPROVED BY:	Robert Yelenosky	DATE: 2/26/92

ROBERT YELENOSKY, ACTING SENIOR AIR POLLUTION CHEMIST

This report has been reviewed and found to be representative of the testing that was performed.

TEST	PERMIT LIMIT	MEASURED	PERFORMANCE
RULE 54 DUST & FUMES	40 lbs/hr	13.20 lbs/hr	PASSED

SUMMARY:

ITEM	Vm	Bws	Cs	E (y-comp)	I	Vs (y-comp)	ts	Qstd (y-comp)	PROD RATE
UNITS	ft^3	%	gr/dscf	lbs/hr	%	ft/sec	°F	dscfm	tons/hr
VALUE	47.228	10.80	0.181	13.20	104	2.76	125	8.49E+03	167.3

SYSTEM DESCRIPTION:

This asphalt plant combines crushed rock and and sand with asphalt oil in batch loads of varying sizes. The rock and sand are heated by natural gas in a rotary drum. The exhaust from this drier is vented through a cyclone and then to a wet scrubber, which exhausts tangentially into an exit stack. The emissions from this stack are the subject of this report.

PROCEDURES:

The procedures and equipment utilized in these tests are based on EPA New Source Performance Standards Method 5. The sampling train was modified to utilize a back-end filter and 5th impinger filled with silica gel (fig. 1), as outlined by the SDAPCD QA manual.

CALCULATIONS

All preliminary assumptions and calculations are based on data obtained from previous tests. All equations are from the EPA CFR 40, July 1, 1990, Parts 53-60, Appendix A, Methods 1-5 inclusive. Because this site exhibits extensive cyclonic flow, calculations for velocity (Vs), flow rate (Qs), flow rate at standard conditions (Qstd), and the emission rate (E) must be adjusted accordingly (see CALCULATION section).

PARTICULATE SAMPLING:

The test consisted of sampling at 24 traverse points, 6 from each of 4 sample ports (fig.2), collected from 82 inches below the stack (fig 3). Due to the tangential inlet, there is significant cyclonic flow; therefore, EPA NSPS Methods 2 and 5 are not directly applicable and must be modified to achieve isokinetic sampling. An inclinometer was strapped to the probe. The pitot tube on the probe was rotated until the ΔP reached a maximum, and the angle was recorded. This procedure was repeated for all the points. The flow was counterclockwise and all the angles were 82° from the vertical. The sampling time for each point was made proportional to the cosine of the angle of that point. Except for the rotation of the probe into the direction of the maximum flow, the sampling was performed as usual. All field data was transferred to the computer printout. All calculations were done by the computer and the emissions were compared to rule 54 of the SDAPCD.

ANALYSES:

Gas: An integrated bag sample was collected during the test and analyzed at the APCD lab.

Particulate: All procedures follow EPA guidelines, except where noted in the SDAPCD QA manual.

EQUIPMENT:

The support equipment for the sampling probe-hot/cold box was non-standard. Because the ports are located 13 inches from the BOTTOM of the platform, the unirail could not be used. Instead, we placed a plank under the port, tied it to the platform and the platform railing. Also, in order to slide the hot/cold box under the railing, we had to unbolt one side of the railing from the platform. This is not a safe procedure because the box is not secured and the testers must extend themselves past the railing. Future tests should address this safety issue.

All testing and analysis equipment was calibrated according to EPA guidelines.

Analysis:	*Collection:*	*Sampling:*	*Temp./Press.:*
CO2-Anarad AR400	Filter-Gelman	L/S Box-Napp	Thermocouples-Omega
O2-Teledyne Ryan 320 P4	Holder-Gelman	Umbilical cord-Napp	Read out-Omega
Macrobalance-Sargent Welch	Beakers-Pyrex	Cold/Hot box-Napp	Barometric-calc. by APCD
Microbalance-Sartorious	Impingers-Ace	Pitobe tube-Napp	L/S box-Dwyer magnehelic

Canyon Rock on 12/16/91

P.O.#254 TEST #91351

Trav. Pt	Vm (ft^3)	ΔP (in H2O)	ΔH (in H20)	t 1(unc) (°F)	t 2(unc) (°F)	Stack Temp (°F)	Imp Temp (°F)	velocity (ft/sec)	vel-adj. Vs*cosΩ
	897.810								
W6		0.020	0.400	70.00	84.00	118.00	48	8.46	1.18
5		0.025	0.500	70.00	90.00	119.00	45	9.47	1.32
4		0.100	2.000	70.00	96.00	119.00	43	18.94	2.65
3		0.160	3.200	70.00	100.00	131.00	44	24.20	3.39
2		0.220	4.400	70.00	104.00	113.00	44	27.95	3.91
1		0.220	4.400	70.00	103.00	113.00	44	27.95	3.91
S6		0.030	0.600	72.00	89.00	126.00	46	10.44	1.46
5		0.030	0.600	71.00	96.00	126.00	45	10.44	1.46
4		0.060	1.200	71.00	100.00	126.00	45	14.76	2.06
3		0.200	4.000	71.00	107.00	128.00	46	26.99	3.78
2		0.240	4.800	71.00	108.00	129.00	46	29.59	4.14
1		0.180	3.600	71.00	108.00	131.00	48	25.67	3.59
E6		0.030	0.600	74.00	86.00	100.00	51	10.20	1.43
5		0.070	1.400	73.00	99.00	105.00	51	15.65	2.19
4		0.130	2.600	73.00	104.00	125.00	50	21.71	3.04
3		0.230	4.600	73.00	107.00	127.00	50	28.92	4.05
2		0.240	4.800	74.00	106.00	131.00	51	29.64	4.15
1		0.200	4.000	74.00	106.00	134.00	57	27.13	3.80
N6		0.020	0.400	74.00	99.00	133.00	55	8.57	1.20
5		0.020	0.400	74.00	103.00	132.00	55	8.56	1.20
4		0.080	1.600	74.00	107.00	138.00	55	17.22	2.41
3		0.140	2.800	74.00	109.00	138.00	56	22.77	3.19
2		0.160	3.200	74.00	111.00	123.00	55	24.04	3.36
1	946.658	0.160	3.200	74.00	109.00	126.00	59	24.10	3.37

Average:	Vm	ΔP	ΔH	t 1 (unc)	t 2 (unc)	ts	ti	Vs	Vs (y-comp)
	48.848	0.107	2.471	72.17	101.29	125	50	19.723	2.759

1) The angle of flow was found to be 82° for all the points.
2) Points S1 and S2 had to be combined because the of physical limitations of the port and hot/cold box.
3) The post-test leak check failed, but it is sufficiently close to the upper limit to still deem the test valid.
The post-test leak checked failed, because the metal filter holder chipped the insert for the fourth impinger.
This probably happened because of the constant jarring & jockeying for position the hot/cold box was forced to suffer, when we had to positon it on the plank past our reach.

MISCELLANEOUS:

Ø = 60.0 min
tn = 24 points
ø = 2.5 min

NOZZLE & PROBE:

Dn = 0.372 in
An = 0.1087 in^2
Cp = 0.843

METER BOX PARAMETERS:

ΔH@ = 2.7254
Y = 0.9782
Box ID = D337

PRESSURES:

Pbar= 29.98 in Hg
Pg= 0.00 in H2O
Silica gel(yes/no) yes
Vpw @ ts= 3.954 in Hg
Vpw @ ti= 0.3626 in Hg

VOLUME:

start leak rate = 0.004 cfm
Pass/Fail PASS
final leak rate = 0.031 cfm
Pass/Fail FAIL
Vm 47.228 ft^3

TEMPERATURES:

Corr: t1= 0.10 Corr: t2= 0.40 °F
t1(corr)= 72.27 t2(corr)= 101.69 °F
t1(u)/t1(c)= 0.138 t1(u)/t1(c)= 0.393 %
Pass/Fail PASS Pass/Fail PASS
t1= 72.17 t2= 101.29 °F

STACK PARAMETERS:

circular (yes/no) yes
Ds = 9.00 ft
Length = N/A ft
As = 63.59 ft^2

LAB DATA:

mn(front) = 0.010737 g
mn(back) = 0.517781 g
mn(total) = 0.52852 g
Vlc = 115.38 ml

STACK GAS MEASUREMENTS:

CO2 = 3.30 %
O2 = 16.10 %
CO = 0.00 %
N2 = 80.60 %

TEMPERATURES:

01)	ts = (Σ ts(n))/total n's	125 °F
02)	Ts = ts+460	585 °R
03)	tm= (Σ {(t 1(n)+t 2t(n))/2}/total n's	87 °F
04)	Tm= (t1+t2)/2 + 460	547 °R
05)	ti= (Σ ti(n))/total n's	50 °F
06)	Tstd	528 °R

PRESSURES:

07)	Pbar= {(P @ S.L.)+[ft. above S.L.*(-0.1 in Hg/100ft)]}	29.98 in Hg
08)	Pg= read from pressure sensing device	0.00 in H2O
09)	Ps= Pbar + (Pg/13.6)	29.98 in Hg
10)	ΔH	2.47 in H20
11)	Pm= Pbar+(ΔH/13.6)	30.16 in Hg
12)	Pstd	29.92 in Hg

VOLUME:

13)	Vm= Vm(end)-Vm(begin)	47.228 ft^3
14)	Y	0.9782
15)	Vm'= Vm*Y	46.198 ft^3
16)	Vpw @ ti = from appendix	0.3626
17)	corr Vwm = {[(Vm'*Vpw@imp/Ps)*Pm*Tstd]/(Tm*Pstd)}	0.0000 ft^3
18)	Vm std = {[Vm'*(Tstd/Tm)*(Pm/Pstd)]-corr Vwm}	44.976 ft^3
19)	Vlc= (Σ Volume of impingers)	115.38 ml
20)	∂	0.002201 lb/ml
21)	R	21.85 Hg-ft^3/°R-lb-mo
22)	MwH2O	18.00 g/g-mo
23)	Vw std = {[(Vlc*∂*R*Tstd)/(Pstd*MwH2O)}+corr Vwm}	5.4459 ft^3

CALCULATIONS:

MOISTURE-

24)	Bws(1) =(Vw std)/(Vw std+Vm std)100	10.80 %	
25)	Vpw @ ts = from appendix	3.95 in Hg	
26)	Bws(2) =[(Vpw @ ts)/Ps]*100	13.19 %	
27)	Bws = lower value of equation 24 or 26		10.80 %

MOLECULAR WEIGHT-

28)	%O2	16.10 %
29)	%CO2	3.30 %
30)	%N2+inerts+%CO	80.60 %
31)	Md=[0.440(%CO2)]+[0.320*(%O2)]+[0.280(%N2+inerts+%CO)]	29.17 g/g*mole
32)	Ms=Md*(1-Bws)+18.0*(Bws)	27.97 g/g*mole

FLOW-

33)	ΔP	0.1073 in H2O
34)	Cp	0.843
35 a)	Vs= 85.49*Cp*{[(Ts*ΔP)/(Ps*Ms)]^.5}	19.723 ft/sec
35 b)	Vs (y-component)=(COS Ω)*85.49*Cp*{[(Ts*ΔP)/(Ps*Ms)]^.5}	2.759 ft/sec
36)	As=3.14*[(Ds)^2/4]	63.585 ft^2
37 a)	Qs = (Vs)*As*60	7.52E+04 acfm
37 b)	Qs (y-component) = (Vs (y-component))*As*60	1.05E+04 acfm
38 a)	Qstd =17.64*Qs*(1-Bws)*Ps/Ts	6.07E+04 dscfm
38 b)	Qstd (y-component)=17.64*(Qs (y-component))*(1-Bws)*Ps/Ts	8.49E+03 dscfm

EMISSIONS-

FRONT HALF

39)	mn (front)	0.01074 g
40)	Cs (front) =15.43*mn(front)/Vm std	0.004 grains/dscf
41 a)	E (front) = (0.00857)*(Qstd)*Cs (front)	1.92 lbs/hr
41 b)	E (front) (y-component) = (0.00857)*(Qstd (y-component))*Cs (front)	0.27 lbs/hr

BACK HALF

42)	mn (back)	0.51778 g
43)	Cs (back) =15.43*mn(back)/Vm std	0.178 grains/dscf
44 a)	E (back) = (0.00857)*(Qstd (y-component))*Cs (back)	92.43 lbs/hr
44 b)	E (back) (y-component)= (0.00857)*(Qstd)*Cs (back)	12.93 lbs/hr

TOTAL

45)	mn (total) = mn(front)+mn(back)	0.52852 g
46)	Cs (total) =15.43*mn(total)/Vm std	0.181 grains/dscf
47 a)	E (total) = (0.00857)*(Qstd)*Cs (total)	94.35 lbs/hr
47 b)	E (total) (y-component) = (0.00857)*(Qstd (y-component))*Cs (total)	13.20 lbs/hr

ISOKINETICS:

48)	An=3.14*[(Dn)^2/4]		0.1087 in^2
49)	I=.09450(Ts*Vm std)/Ps*VsAnØ(1-Bws)	104.03 % =	104 %

APPENDIX

SAN DIEGO AIR POLLUTION CONTROL DISTRICT, 9150 CHESAPEAKE DRIVE, SAN DIEGO, CA 92123

LABORATORY ANALYSIS OF PARTICULATE TEST

TEST SITE: V.R. Dennis-Canyon rock Company
7500 Mission Gorge Road
San Diego, CA 92120

TEST # 91351.0		P.O.# 254	TEST DATE: 12/17/91
LAB ANALYSIS BY:	David Shina		DATE: 12/23/91
LAB REPORT BY:	David Shina		DATE: 1/8/92
REVIEWED BY:	Linda Twaddle		DATE:

(1) IMPINGER VOLUMES

	FINAL WEIGHT			INITIAL WEIGHT			NET WEIGHT	
#1	710.12	g	-	554.18	g	=	155.94	g
#2	491.99	g	-	541.33	g	=	-49.34	g
#3	449.56	g	-	446.90	g	=	2.66	g
#4	466.33	g	-	465.17	g	=	1.16	g
SILICA GEL CONTAINER:								
#5	821.35	g	-	816.39	g	=	4.96	g

Tot. Vol.= 115.38 g

(2) BLANKS

STD = Net Wgt(solv) / Tot. Vol(solv. used)

ACETONE:

VOLUMES:

BKR ID = 91128
Initial= 200.00 ml
tot. Rinses= 60.00 ml
Tot. Vol= 260.00 ml

WEIGHTS:

final= 28.7250 g
initial= 28.7239 g
net= 0.0011 g

LIMIT: 0.001% = 10 ppm = 0.000010g/ml

STD = 4.23077E-06 g/ml
0.000423 %
= 4.23 ppm
The Blank PASSED

WATER:

VOLUMES:

BKR ID = 91044
Initial= 200.00 ml
tot. Rinses= 40.00 ml
Tot. Vol= 240.00 ml

WEIGHTS:

final= 29.3159 g
initial= 29.3153 g
net= 0.0006 g

LIMIT: 4ppm = 4mg/L = 0.000004g/ml

STD = 2.50000E-06 g/ml
0.000250 %
2.50 ppm
The Blank PASSED

ORGANIC:

VOLUMES:

BKR ID =
Initial= ml
tot. Rinses= ml
Tot. Vol= 0.00 ml

WEIGHTS:

final= g
initial= g
net= 0.0000 g

LIMIT: 0.001% = 10 ppm = 0.000010g/ml

STD = N/A g/ml
N/A %
N/A ppm
The Blank N/A

(3) WEIGHT

P.O.#254 TEST#91351

FRONT HALF

ACETONE

WEIGHT (uncorrected):

BKR ID= 91112
final= 28.7660 g
initial= 28.7544 g
Wgt. Ac= 0.0116 g

VOLUME:

Initial= 150.00 ml
tot. rinses= 60.00 ml
Sep funnel= ____ ml
Tot. Vol= 210.00 ml

WEIGHT FROM SOLVENT:

Total Vol * Acetone STD = 0.000888 g

WEIGHT (corrected):

Wgt(corr)= Wgt(unc)-Wgt from solvent= 0.010712 g

WATER:

WEIGHT (uncorrected):

BKR ID= 91058
final= 49.7414 g
initial= 49.7407 g
Wgt. Water= 0.0007 g

VOLUMES:

Initial= 250.00 ml
tot. Rinses= 20.00 ml
Tot. Vol = 270.00 ml

WEIGHT FROM SOLVENT:

Total Vol * Water STD = 0.000675 g

WEIGHT (corrected):

Wgt(corr)= Wgt(unc)-Wgt. from solvent= 0.000025 g

ORGANIC:

WEIGHT (uncorrected):

BKR ID= ____
final= ____ g
initial= ____ g
Wgt. Org= 0.0000 g

VOLUMES:

tot. Rinses= ____ ml
Tot. Vol= 0.00 ml

WEIGHT FROM SOLVENT:

Total Vol * Organic STD = N/A g

WEIGHT (corrected):

Wgt(corr)= Wgt(unc)-Wgt from solvent= N/A g

FILTERS:

WEIGHT:

ID No.= ____
final= ____ g
initial= ____ g
Wgt. Filter= 0.0000 g

BACK HALF

ACETONE

WEIGHT (uncorrected):

BKR ID= 91120
final= 29.4415 g
initial= 29.1267 g
Wgt. Ac.= 0.3148 g

VOLUME:

Initial= 400.00 ml
tot. Rinses= 60.00 ml
Sep. funnel= ____ ml
Tot. Vol= 460.00 ml

WEIGHT FROM SOLVENT:

Total Vol * Acetone STD = 0.001946 g

WEIGHT (corrected):

Wgt(corr)= Wgt(unc)-Wgt from solvent= 0.312854 g

WATER:

WEIGHT (uncorrected):

BKR ID= 91056
final= 28.8819 g
initial= 28.7654 g
Wgt. Water= 0.1165 g

VOLUMES:

Initial= 650.00 ml
tot. Rinses= 60.00 ml
Imp. charge= 199.14 ml
Tot. Vol= 909.14 ml

WEIGHT FROM SOLVENT:

Total Vol * Water STD = 0.002273 g

WEIGHT (corrected):

Wgt(corr)= Wgt(unc)-Wgt from solvent= 0.114227 g

ORGANIC:

WEIGHT (uncorrected):

BKR ID= ____
final= ____ g
initial= ____ g
Wgt. Org= 0.0000 g

VOLUMES:

tot. Rinses= ____ ml
Tot. Vol= 0.00 ml

WEIGHT FROM SOLVENT:

Total Vol * Organic STD = N/A g

WEIGHT (corrected):

Wgt(corr)= Wgt(unc)-Wgt from solvent= N/A g

FILTERS:

WEIGHT:

ID No.= 89085
final= 1.6826 g
initial= 1.5919 g
Wgt. Filter= 0.0907 g

PARTICULATE COLLECTED (front half):

ΣWgt corrected + Wgt filter= mn (front)= 0.010737 g

PARTICULATE COLLECTED (back half):

ΣWgt corrected + Wgt filter= mn (back)= 0.517781 g

TOTAL PARTICULATE COLLECTED:

mn(front) + mn(back) =0.528518 g

SAN DIEGO COUNTY AIR POLLUTION CONTROL DISTRICT

FIGURE 1

CONDENSER SYSTEM

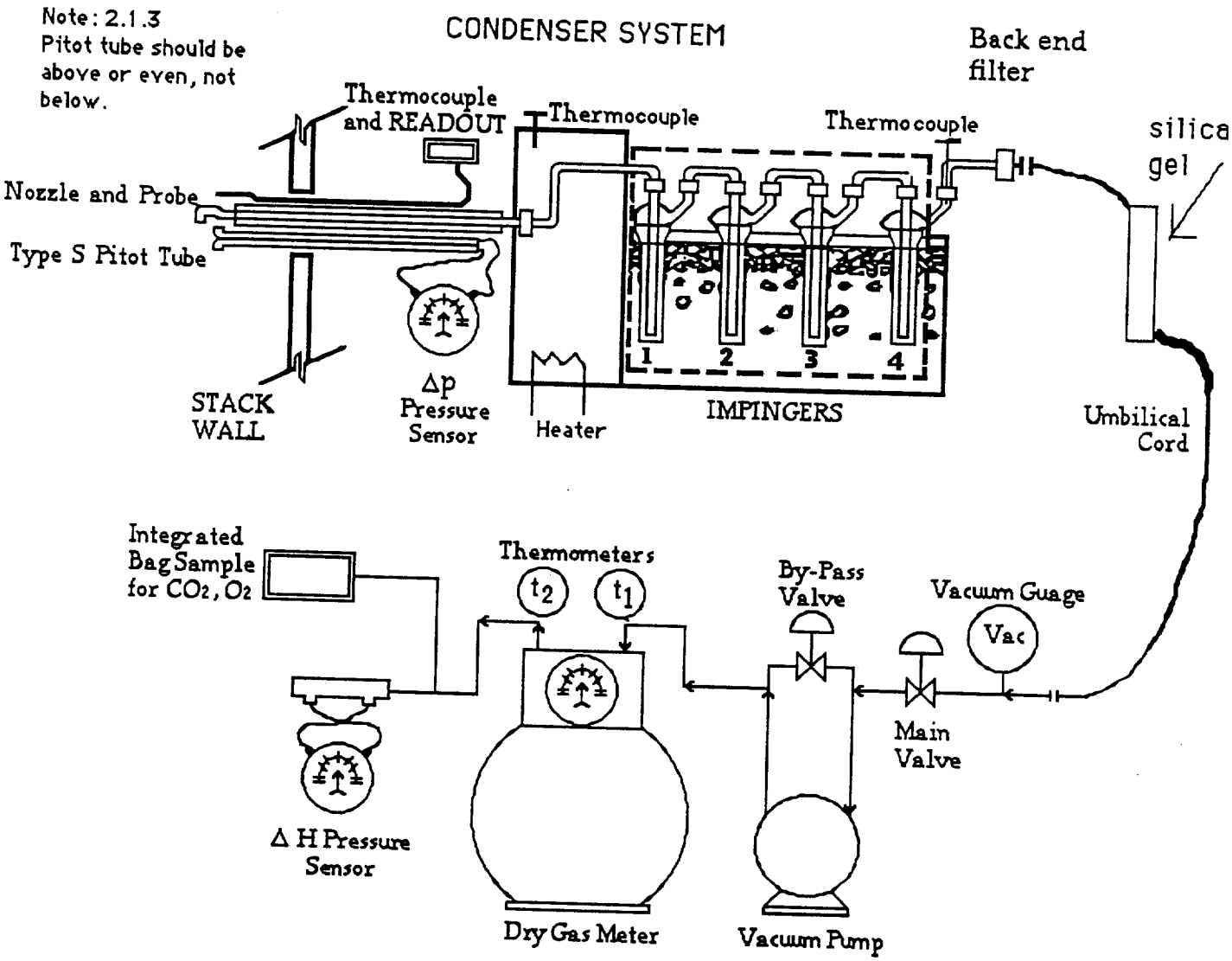

LEGEND

No. 1 Mod-100 ML Deionized Water

No. 2 Std - 100 ML Deionized Water

No. 3 Mod- Dry

No. 4 Mod- Dry

Mod - Modified Type Greenburg-Smith
Std - Standard Type " "

FIELD DATA ABBREVIATIONS

PT = Point Number
T_s = Stack Temperature
Δp = Pitot Tube Pressure Differential; in H_2O
V_s = Stack Velocity, fps
ΔH = Orifice Meter Pressure Drop, in H_2O
t_1 = Meter Inlet Temperature, °F
t_2 = Meter Outlet Temperature, °F
Pm = Pump Vacuum, in Hg
ti = Impinger Temperature
P_{bar} = Barometric Pressure

FIGURE 1 : PARTICULATE MATTER SAMPLING TRAIN

SITE DESCRIPTION
SAN DIEGO AIR POLLUTION CONTROL DISTRICT
V.R. DENNIS-CANYON ROCK ASPHALT PLANT

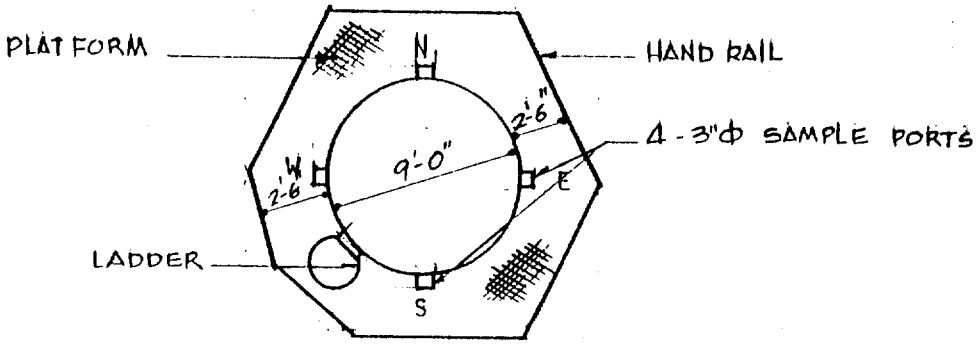

TOP VIEW
NO SCALE

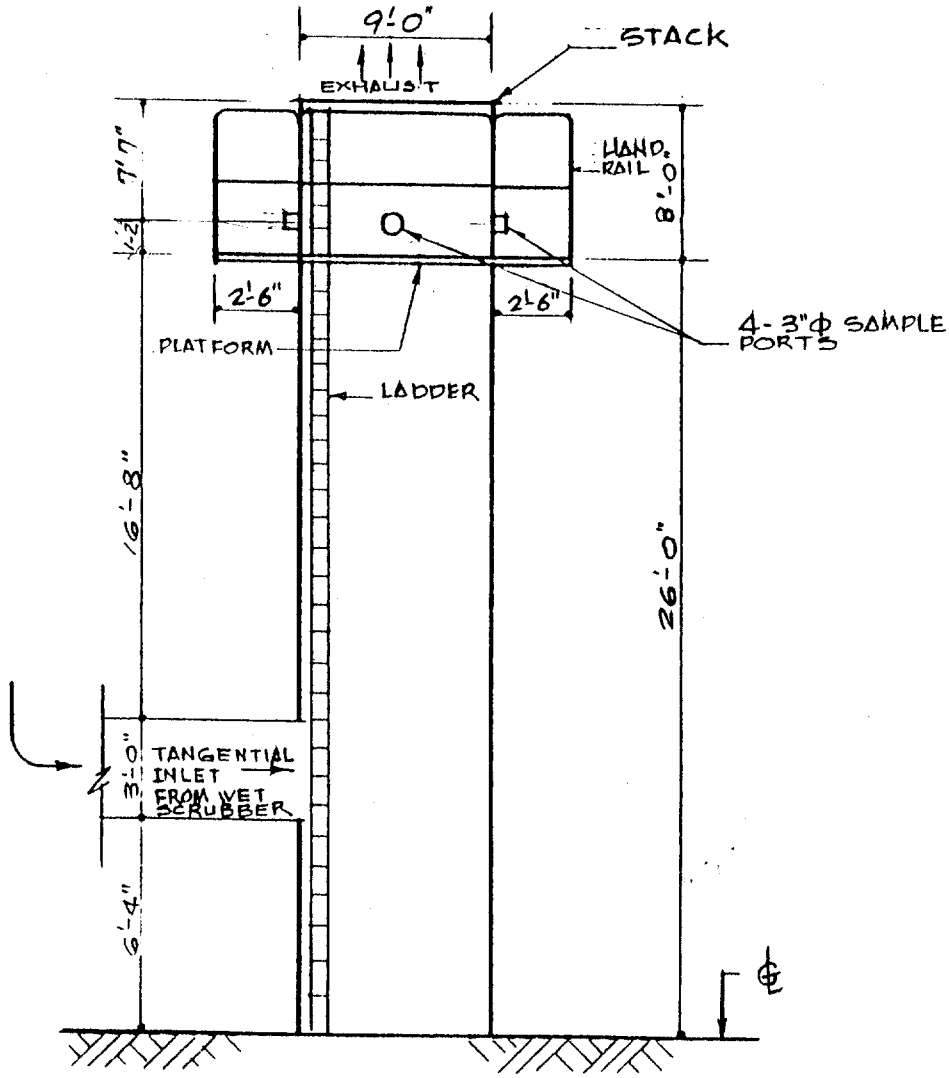

SIDE VIEW
NO SCALE

FIG 3

SAN DIEGO COUNTY AIR POLLUTION CONTROL DISTRICT

Figure 2

TRAVERSE POINTS

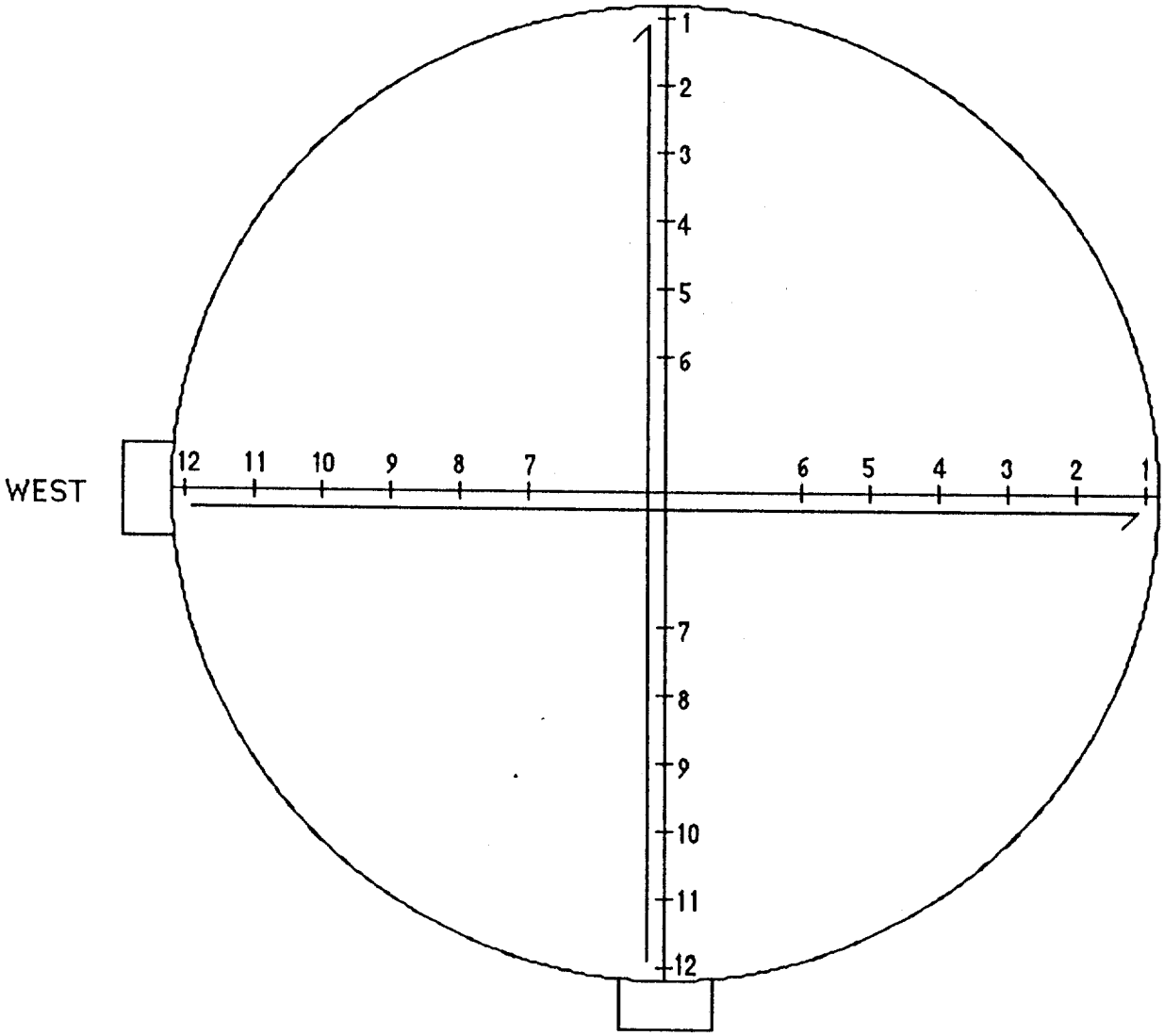

POINT #	DISTANCE INTO STACK inches
12, 1	2.27
11, 2	7.24
10, 3	12.74
9, 4	19.12
8, 5	27
7, 6	38.45

Stack Diameter = 9 FT

Figure 2

APCD TEST NO. 91-351

TEST DATE: 12/17/91

ASPHALT BATCH PLANT - CANYON ROCK PLANT
7500 MISSION GORGE ROAD, SAN DIEGO, CA

P/O NO. 0254

I. COMPOSITION PER NOMINAL 3 TON BATCH

3/4" MIX (MIX #11)

BIN #1 - SAND & DUST	2720 LBS
BIN #2 - 3/8" ROCK	1695 LBS
BIN #3 - 1/2" ROCK	850 LBS
BIN #4 - 3/4" ROCK	395 LBS
AR4000 OIL	342 LBS
	6002 LBS

II. ASPHALT PRODUCTION/OPERATIONAL DATA DURING SAMPLING TEST

PLANT TIME	MAT'L TEMP. °F	OIL TEMP °F	NATURAL GAS METER RDG. FT^3	PRODUCTION TONS	REMARKS
10:16	347	300		0	START TEST
10:19:15			207010×10^3		
10:42	351				
10:46:15			207027×10^3		
11:08				156	
11:10			207042×10^3	161	PLT. SHUTDOWN
11:38			207042×10^3	161	PLT. STARTUP
11:47	294				

PLANT TIME	MAT'L TEMP °F	OIL TEMP °F	NATURAL GAS METER RDG. FT^3	PRODUCTION TONS	REMARKS
11:52	332				
11:54					
11:57				197.3	
12:12		300	207055×10^3		
12:13:12					TEST COMPLETED
12:14			207065×10^3		
		300		251	

PRODUCTION TOTAL TIME: 12:14 - 10:16 = 1 HR 58 MINS
PRODUCTION DOWN TIME: 11:38 - 11:10 = 28 MINS
PRODUCTION NET TIME: 1 HR 58 MINS - 28 MINS = 1 HR 30 MINS (1½ HRS)
PRODUCTION WEIGHT: 251 TONS (3/4" MIX)
AVERAGE PRODUCTION RATE: 251 TONS/1.5 HRS = 167.3 TONS/HR

III NATURAL GAS FLOW USAGE

INITIAL RDG: 207010000 FT^3 @ 10:22:15
FINAL RDG: 207065000 FT^3 @ 12:16:12
Δ VOLUME = 55000 FT^3
Δ TIME = 1.90 HRS - .47 HRS DOWN TIME = 1.43 HRS.
AVERAGE FLOW RATE = 55,000 FT^3/1.43 HRS. = 38,462 SCFH

NOTE: The gas meter was a Rockwell Turbometer with an Electro-Corrector indicator to correct to standard conditions. (SDG&E No. 42440)

COMMENTS:

1. The test was conducted by the San Diego County Air Pollution Control District Source Test Team consisting of David Shina, Gary Smith and Andrew Leal

COMMENTS: (CONTINUED)

2. The scrubber exhaust stack was evaluated for the Air Pollution Control District (APCD) Rules 54 (particulate emissions not to exceed 40 lbs/hr) and Rule 50 (visible emissions not to exceed Ringelmann No. 1 (20% opacity) for excess of 3 minutes in any 60 minutes consecutive time period).

3. The sampling time was 2 1/2 minutes per point and 6 points per traverse for 4 points (round exhaust stack) for a total of 24 points.

4. The flow out of the scrubber stack was cyclonic with the gas flow angle α from the vertical direction ranging from 80° to 90°. The exhaust flow was fluctuating but velocities were positive across all the traverses.

5. The maximum "blue smoke" visible emissions observed at the truck silo drop area was 20% opacity maximum.

6. There were no visible emissions observed at the scrubber exhaust stack and the rotary dryer seals. There was a large steam plume from the scrubber during the entire time of plant operation. The asphalt plant was in compliance with Rule 50.

COMMENTS: (CONTINUED)

7. The scrubber water flow was controlled by a hand valve that was set prior to the plant operation for the day. There were no water flow meter and water pressure gages.

8. Photos were taken of the asphalt plant during the test.

Andrew Segal

ANDREW SEGAL
Associate Air Pollution Control Engineer

NOMENCLATURE (concl.)

symbol	units	explanation	equation
	P		
ΔP	in H2O	pitot diff. press.-velocity head of stack gas	read from measuring device
Pbar	in Hg	barometric pressure at sampling pt.	read from press measuring device
π(pi)	none	the ratio of the circumference of a circle to its diameter	3.14165 (see CRC)
Pm	in Hg	absoulte meter pressure	Pbar+(ΔH/13.6)
Ps	in Hg	absolute stack pressure	Pbar+(Pstatic/13.6)
Pg	in H2O	static pressure of stack	read from pressure sensing device
Pstd	in Hg	press at std conditions (29.92)	see CFR
	Q		
Qs	acfm	flow rate	vs*Ao*60
Qstd	dscfm	dry volumetric stack gas flow rate, corrected to STP	17.64*Qs(1-Bws)*(Ps/Ts)
	R		
R	in Hg-ft^3/°R-lb-mo	ideal gas constant	21.85 (see CRC)
	S		
S.L.	none	Sea Level	read from a relief map
	T		
t1	°F	dry gas meter inlet temp, uncorrected	read from temp sensing device
t2	°F	dry gas meter outlet temp,uncorrected	read from temp sensing device
t1 corr	°F	dry gas meter outlet temp,corrected	t1 + temperature correction
t2 corr	°F	dry gas meter outlet temp,corrected	t2 + temperature correction
ø(theta)	min	sampling time/point	Ø/tn
Ø(Theta)	min	total sampling time	none
ti	°F	impinger outlet temp	read from temp sensing device
tm	°F	dry gas meter temp in F	(t1+t2)/2
Tm	°R	dry gas meter temp in R	tm+460
tn	none	ttl number or traverse pts	summation of the traverse points
ts	°F	stack temp in F	read from temp sensing device
Ts	°R	stack temp in R	ts+460
Tstd	°R	temp at std conditions (528)	see CFR
	U		
Vlc	ml	water collected from impingers and the silica gel (if applicable)	from lab analysis
Vm	ft^3	sample gas volume, uncorrected	read from dry gas meter
Vm'	ft^3	sample gas volume, corrected	Vm*Y
Vm std	ft^3	volume of gas sample by the dry gas meter,corrected to STP	((Vm'*Tstd)Pm)/((Pstd*Tm)-corr Vm)
Vpw@ts	in Hg	vapor pressure of water at ts	see CRC water vapor press. tables
Vpw@ti	in Hg	vapor pressure of water at ti	see CRC water vapor press. tables
Vs	ft/sec	stack gas velocity	85.49*Cp((Ts*ΔP)/(Ps*Ms))^0.5
Vw std	ft^3	Vol. of water vapor in gas sample, corrected to STP	(Vlc*∂*R*Tstd)/(Pstd*MW H2O)+corr Vwm
	Y		
Y	none	dry gas meter calibration factor	see CFR 40, parts 53-60

Conversion Factors

(multiply by the number)			
0.002669	in Hg-ft^3/°R-ml	conversion to get in Hg-ft^3/R	see CRC
0.00857	lb/gr-min/hr	conv from gr/min to lb/hr (60/7000)	see Lange's Handbook of Chemistry
0.04707	ft^3/ml	conversion from ml to ft^3	see Lange's Handbook of Chemistry
15.43	gr/g	conversion from g to gr	see Lange's Handbook of Chemistry
17.64	°R/in H2O	Tstd/Pstd (528/29.92)	see Lange's Handbook of Chemistry
85.49	(ft/sec)-(lb-in Hg/lb-mo-°R-in H20))^.5	conversion factor to get velocity in ft/sec	see CRC
(divide by the number)			
144	in^2/ft^2	conversion from in^2 to ft^2	see CRC
13.6	in H20/in Hg	conversion from in H20 to in Hg	see CRC
(add to the number)			
460	°R/°F	conversion from F to R	see CRC

ver. 3 by DNS on 9/10/91

NOMENCLATURE

symbol	units	explanation	equation
	A		
An	in^2	nozzle area	π/4((Dn)^2)
As	ft^2	stack area	π/4((Ds)^2) or LxW
	B		
Bws(1)	%	fractional stack gas moisture-equ 1	((Vw std)/(Vw std+Vm std))100
Bws(2)	%	fractional stack gas moisture-equ 2	((Vpw @ ts)/Ps)100
Bws	%	water vapor in the gas stream	lower of Bws(1) and Bws(2)
	C		
CO	%	carbon monoxide	read from measuring device(0 for Asphalt plants)
CO2	%	carbon dioxide	read from measuring device
Corr Vwm	ft^3	correction for Vw w/o silica gel	((Vm*(Vpw@ts)/Ps)*Pm*Tstd)/ (Tm*Pstd)
Cp	none	pitot tube correction factor	see EPA method 3
Cs(front)	gr/dscf	concentration of particulate in stack gas, corrected to STP-for front	(15.43*mn(front))/(Vm std)
Cs(back)	gr/dscf	concentration of particulate in stack gas, corrected to STP-for back	(15.43*mn(back))/(Vm std)
Cs(total)	gr/dscf	concentration of particulate in stack gas, corrected to STP-for total	(15.43*mn(total))/(Vm std)
Cs12(front, back,total)		same as Cs(front,back,total) except-corrected for grain loading at 12% CO2	(12/%CO2)*(15.43*mn(fr, back,total))/(Vm std)
	D		
∂ (density)	lb/ml	density of water at STP	0.002201 (see CRC)
Ds	in or ft	stack diameter	measure at site
Dn	in	nozzle diameter	avg of at least three measurements
	E		
E.A.	%	Excess air (for combustion)	((%O2-%CO)*100)/ (.264*%N2-%O2-.5*%CO)
E(front)	lbs/hr	part. emissions rate-front	(0.00857)(Qsd*Cs(front))
E(back)	lbs/hr	part. emissions rate-back	(0.00857)(Qsd*Cs(back))
E(total)	lbs/hr	part. emissions rate-total	(0.00857)(Qsd*Cs(total))
	H		
ΔH	in H2O	average differential pressure across the orifice meter	avg of the readings from the pressure measuring device
ΔH@	none	orifice pressure differential at STP	see EPA Method 5 Appendix
	I		
I	%	isokinetics	[0.09450*Ts*Vm std]/ [Ps*vs*Θ*(An/144)*(1-(Bws/100))]
	M		
Md	g/g-mole	dry stack gas molecular wgt	0.44(%CO2)+0.320(%O2)+0.280 (%N2+inerts+CO)
mn(back)	g	particulate in impingers	measurement from lab analysis
mn(front)	g	particulate in nozzle & probe	measurement from lab analysis
mn(total)	g	total particulate collected	measurement from lab analysis
Ms	g/g-mole	wet stack gas molecular wgt	Md(1-Bws)+18.0(Bws)
MW CO2	g/mole	mo. wgt of carbon dioxide	44 (see periodic table)
MW N2	g/mole	mo. wgt of nitrogen	28 (see periodic table)
MW O2	g/mole	mo. wgt of oxygen	32 (see periodic table)
MW H2O	g/mole	mo. wgt of water	18 (see periodic table)
	N		
N2	%	percent nitrogen	100-(%CO2+%O2+%CO+inerts)
	O		
O2	%	percent oxygen	read from measuring device

NOMENCLATURE (cont.)

ver. 3 by DNS on 9/10/91

RAW DATA SHEETS

[illegible]
12/16/91

P.O. # 254

CANYON ROCK
TEST # 91351

028

IMPINGERS

		PRE-TEST				POST-TEST			
DATE	IMP	TRAP	TRAP + H2O	H2O	TRAP + H2O + IMP	DATE	TRAP + H2O + IMP	NET	COMMENTS
12/6	1	352.42	425.04	99.62	554.18	12/10	710.12	155.94	muddy water
	2	313.04	412.56	99.52	541.33		441.99	-49.34	brown water
	3	300.46	—	—	—		449.56	2.66	
	4	327.04	—	—	—		466.33	1.16	
	5	816.39	—	—	—		821.35	7.95	
			Total =	199.14			total =	118.37	

GAS

DATE	gas	cal gas	cal #	Trial 1	T 2	T 3	AVG	COMMENTS
12/17	CO_2	5.2%	—	3.3	3.3	—	3.3	
	O_2	20.8	20.8	16.1	16.1	—	16.1	

WGTS

LOC	BKR NO.	INITIAL WGT	WGT 1 65°F 1/6 0900	WGT 2 65°F 1/7 0900	WGT 3 67°F 1/8 0800	WGT 4	COMMENTS	FINAL WGT
Fr-Ac	91112	28.7544	28.7657	.7654	.7660			28.7660
Fr-Wa	91058	49.7407	49.7410	.7415	.7414			49.7414
Ba-Ac	91120	29.1267	29.4413	.4415	.4415			29.4415
Ba-Wa	91056	28.7654	28.8822	.8821	.8819			28.8819
BL-Ac	91128	28.7239	28.7246	.7247	.7250			28.7250
BL-Wa	91044	29.3153	.3157	.3155	.3159			29.3159
Filter	89085	1.5919	1.6827	1.6825	1.6826			1.6826

Cp

Used SN7; Ps = .31 Cp = .843
Ps = .67 Cp = .851
For ΔP_{avg} = .107, Cp = .843

[illegible]
12/16/91 -

ACETONE

[illegible] FLOOR
P.O. # [illegible] 029

Date	Rinse	Vol	Label	Comments
12/17 12/23	INIT 10 20	150 60	Fr-Ac 91112	
		210		

Date	Rinse	Vol	Label	Comments
12/17 12/23	INIT 10 20	400 60	Ba-Ac 91120	
		460		

Date	Rinse	Vol	Label	Comments
12/17 12/23	INIT 10 20	200 60	BL-Ac 91128	
		260		

[illegible]
12/16/91

CANYON ROCK
P.O. #7854

030

WATER

Date	rinse	Vol	label	
12/17 12/23	IVIT 1° 2°	Fe-wa 91058	250 ~~[illegible]~~ 20	
			270	

Date	rinse	Vol	label	
12/17 1/4/92	IVIT 1° 2°	Ba-wa 91056	650 60	

Date	rinse	Vol	label	
12/17 12/23	IVIT 1° 2°	Zn-wa 91144	200 40	
			240	

BAROMETRIC PRESSURE REQUEST

SITE: Canyon Rock TEST#: 91351 P.O.# 254 DATE: 12/16

TO: Tom Ryan OF: MET DATE: 12/16

FROM: David OF: MTS DATE: 12/16

ADDRESS: 7500 Mission Gorge Road

TEST DATE: 12/17/91 TEST TIME: 5am — 1pm

I need the usual hourly breakdown

GRADE LEVEL: 100 Feet above MSL

+ 6 Feet above Grade

ALTITUDE: 106 Feet above MSL

CALCULATIONS:

5A -29.93" Hg
6 -29.92
7 -29.93
8 -29.93
9 -29.95
10 -29.96
11 -29.98
12 -29.98
1P -29.96

29.97 + 29.98 + 29.98 = 29.98

SIGNATURE: DATE: 12/18/91 TIME:

METHOD 5 EQUIPMENT CHECKLIST

SITE: Canyon Rock TEST#: 91351 P.O.# 254 DATE: 12/16/91

MISCELLANEOUS
- ___ Camera & film
- ___ Ice chest
- ___ Ice
- ✓ 3 Tedlar bags
- ✓ Duct tape

CALCULATION EQUIP.
- ✓ Source Test briefcase
- ___ Calib. notebook
- ___ Stopwatch
- ___ Nomograph
- ___ Calculator
- ___ Assorted pens
- ___ Tape measure
- ___ White out
- ___ Labels
- ___ Scissors
- ___ Teflon tape
- ✓ L/S Box fuses

LAB/FIELD EQUIPMENT
- ✓ Acetone
- ✓ Foil
- ✓ Parafilm
- ✓ Distilled water
- ✓ Kimwipes
- ✓ Vac. grease
- ✓ 100 ml grad. cylinder
- ✓ Sample coll. bottles
- ✓ Nozzle brush
- ✓ Probe brush

SAMPLING EQUIPMENT (reserve)
- ✓ L/S Box
  - ___ Pitot tube leak test equipment
  - ___ Umbilical cord
- ___ Cold/Hot box
  - ___ Impingers (Impingers 1-4)
  - ___ Imp-imp connections
  - ___ Imp-probe connections
  - ___ 100ml of water in 1st 2 imp.
  - ___ Impinger clips
  - ___ Silica gel imp. with vac. adapter
  - ___ Filter & Filter holder
  - ___ Heating coil

SAMPLING EQUIPMENT (main)
- ___ L/S Box
  - ___ Pitot tube leak test equipment
  - ✓ Thermocouple read-out
  - ✓ Electrical cords (50' & 100')
  - ___ Umbilical cord
- ___ Cold/Hot box
  - ___ Impingers (Impingers 1-4)
  - ___ Imp-imp connections
  - ___ Imp-probe connections
  - ___ Spare set of connections
  - ✓ 100ml of water in 1st 2 imp.
  - ___ Impinger clips
  - ___ Silica gel imp. with vac. adapter
  - ___ Filter & Filter holder
  - ___ Spare filter & filter holder
  - ___ Heating coil
  - ___ Probe
  - ___ Spare probe
  - ___ Nozzle boxes with nuts

TOOL BOX
- ___ Assorted monkey wrenches
- ___ Assorted open-end wrenches
- ___ Assorted screwdrivers
- ___ 3' pipe wrench
- ___ Port (wire) brush
- ___ Tape measure

STACK EQUIPMENT not needed
- ___ Unirail
  - ___ Port/nipple adapters
  - ___ 2 C -clamps
  - ___ 2 unirails with rollers
  - ___ Chains
  - ___ 2 nylon straps
- ✓ Rope (25' and 50')
- ✓ Pail
- ✓ Gloves (leather)
- ___ Gloves (heat resistant)
- ___ Rags and diapers

MISCELLANEOUS EQUIPMENT
- ___ Nomograph-reserve
- ___ Calculator-reserve
- ✓ Inclinometer-reserve (cyclonic flow)
- ___ Filter-reserve (high moisture)
- ___ Large pipe wrench
- ___ Cold/~~hot box rollers for SDG&E sites~~

SAFETY
- ___ First aid box
- ___ Ear plugs
- ___ Safety shoes and hat
- ___ Safety cones

	MAIN					RESERVE				
	TYPE	ID#	SIZE	CLEANED	CAL.DATE	TYPE	ID#	SIZE	CLEANED	CAL.DATE
Nozzle Dia.	Napp									
Pitot Tube	Napp									
Tedlar Bag	SKC									
L/S Box	Napp	—	—	DM	—					
Stack Sensor	omega	—	—	DM	6/91					
Box Sensor	↓	—	—	↓	↓					
Imp. Sensor	↓	—	—	↓	↓					
ΔP Sensor	Dwyer	—		—	6/91					
ΔH Sensor	↓	—		—	↓					
Cold Box	Napp	.	—	—	—					
Hot Box	↓		—	—	—					
Temp Disp.	omega	—	—	—	6/91					

Same as

SIGNATURE: DM DATE: 3:30 TIME: 12/16/91

DM 4:45am 12/17/91

LAB DATA SHEET (MAIN)

SITE: Canyon Rock TEST#: P.O.#: 254 DATE: 12/16/91

COLD BOX#: B3 HOT BOX#: B4

IMPINGER COLLECTION MEASUREMENTS

PRE-TEST						POST-TEST			
	A	B	C	D	E		F	G	
DATE	IMP No.	TRAP(w/o H2O) grams	TRAP (w/H2O) (B+H2O) g	WATER (C-B) g	IMP+TRAP+H2O (C+IMP) g	DATE	IMP+TRAP+H2O grams	H2O COLL (F-E) grams	COMMENTS
12/16	1	325.42 g	425.04 g	99.62 g	554.18 g	12/17	710.12 g	155.94 g	
↓	2	313.04 g	412.56 g	99.52 g	541.33 g	↓	491.99 g	-49.34 g	
	3	320.46 g	— g	— g	446.90 g		449.56 g	2.66 g	
	4	327.04 g	— g	— g	465.17 g		466.33 g	1.16 g	
	5	816.39 g	— g	— g	816.39 g		824.35 g	7.96 g	Silica gel
		g	g	g	g		g	g	

TTL WGT OF CHARGE (ΣD) 199.14 g

TTL WGT GAIN FROM IMP (ΣG) 118.38 g

GAS ANALYSIS

SN 7

INSTR.: Anarad				RANGE: %
CAL#=		Cal. gas %= 5.2 %		Gas actual= 5.2 %
DATE	TRIAL	GAS	PERCENT	COMMENTS
12/17	1	CO2	3.3 %	
	2	↓	3.3 %	
	3		%	
		AVG =	3.3 %	

INSTR.: Teledyne				RANGE: %
CAL#=		Cal. gas %= 20.8 %		Gas actual= 20.8 %
DATE	TRIAL	GAS	PERCENT	COMMENTS
12/17	1	O2	16.1 %	
↓	2	↓	16.1 %	
	3		%	
		AVG =	16.1 %	

FILTER DATA

VARIABLE	WEIGHTS
(1) ID #	89085
(2) PRETEST	g
(3) POST-TEST	g
REC. AMT (3-2)	g

WATER

Front: 250 mL (91058 + 20 mL

Back: ~~500 mL~~ + 150 650

Acetone

Front: 150 mL (91112 + 60 mL)

back: 400 mL (91120 + 60 mL

Blank: water: 200 mL / 91144 + 40

Ac: 200 mL + 91128 + 60

PreTest: SIGNATURE: [signature] DATE: 12/16/91 TIME: 4

PostTest: SIGNATURE: [signature] DATE: 12/17/91 TIME: 5 pm

SAN DIEGO COUNTY AIR POLLUTION CONTROL DISTRICT

Figure

TRAVERSE POINTS

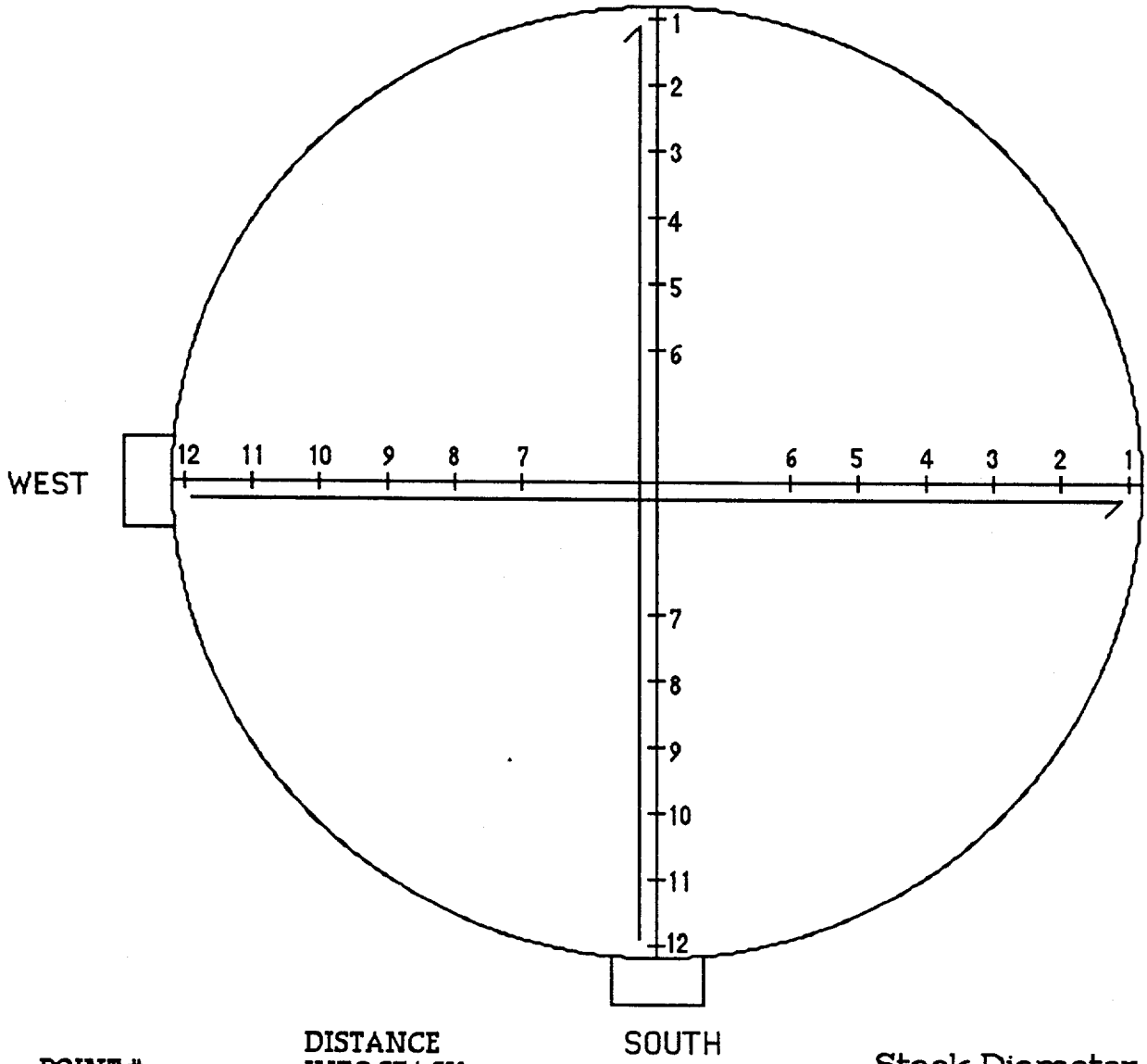

Stack Diameter = 9 ft = 108"

POINT #	DISTANCE INTO STACK
1	2.1% → 2.27 inches
2	6.7% → 7.24 inches
3	11.8% → 12.74 inches
4	17.7% → 19.12"
5	25% → 27"
6	35.6% → 38.45"
7	64.4% → 69.55"
8	75% → 81"
9	82.3% → 88.88"
10	88.2% → 95.26"
11	93.3% → 100.76"
12	97.9% → 105.73"

Figure

Yc METER CHECK

SITE: Canyon Rock TEST#: 91351 P.O#: 254 Date: 12/16/91

P bar= _____ in Hg L/S Box= 0337 ΔH@= 2.7254 T1 corr= +.4 °F

Y= .9782 0.97*Y= .9489 1.03*Y= 1.0075 T2 corr= +.1 °F

Yc=(time/Vm) * {[(0.0319*Tm)/Pb]^0.5} run L/S box at ΔH@ for at least 5 minutes

PRE-TEST 5 MINUTE Y CHECK

P bar= 29.69 in Hg assume

	TIME	VOLUME	t1 (unc)	t2 (unc)	tm= tavg-i-(unc)	LIMIT=tavg(u)/tavg(c)
initial(i)	0 min (3:50)	738.651 ft^3	70 °F	102 °F	86 °F	%
			t1 (corr)	t2 (corr)	tavg-i-(corr)	abs(LIMIT)< 8.1%
						Pass/Fail

	tm(i)	Tm(i)=tm+460
	86 °F	546 °R

	TIME	VOLUME	t1 (unc)	t2 (unc)	tavg-f-(unc)	tavg(u)/tavg(c)
final(f)	5 min (3:55)	742.575 ft^3	73.5 °F	110 °F	91.75 °F	%
			t1 (corr)	t2 (corr)	tavg-f-(corr)	abs(LIMIT)< 8.1%
						Pass/Fail

	tm(f)	Tm(f)=tm+460
	91.75 °F	551.75 °R

	time(f)-time(i)	Vm(f) - Vm(i)
time=	5 min	3.924 ft^3

Tm=[Tm(i)+Tm(f)]/2= 548.88 °R

Yc=(5 min/ 3.924 ft^3)*{[(.0319* 548.88 °R)/ 29.69 in Hg]^0.5}= .9786

time Vm Tm Pbar

0.97*Y < Yc < 1.03*Y = .9489 < .9786 < 1.0075 PASS FAIL

SIGNATURE: DM DATE: 12/17/91 TIME: 4:30 am

POST-TEST 5 MINUTE Y CHECK

P bar= 29.8 in Hg

	TIME	VOLUME	t1 (unc)	t2 (unc)	tm= tavg-i-(unc)	LIMIT=tavg(u)/tavg(c)
initial(i)	0 min	953.611 ft^3	71 °F	104 °F	87.5 °F	%
			t1 (corr)	t2 (corr)	tavg-i-(corr)	abs(LIMIT)< 8.1%
						Pass/Fail

	tm(i)	Tm(i)=tm+460
	87.5 °F	547.5 °R

	TIME	VOLUME	t1 (unc)	t2 (unc)	tavg-f-(unc)	tavg(u)/tavg(c)
final(f)	5 min	957.530 ft^3	75 °F	113 °F	94 °F	%
			t1 (corr)	t2 (corr)	tavg-f-(corr)	abs(LIMIT)< 8.1%
						Pass/Fail

	tm(f)	Tm(f)=tm+460
	94 °F	554 °R

	time(f)-time(i)	Vm(f) - Vm(i)
time=	5 min	3.919 ft^3

Tm=[Tm(i)+Tm(f)]/2= 550.75 °R

Yc=(5 min/ 3.919 ft^3)*{[(.0319* 550.75 °R)/ 29.8 in Hg]^0.5}= .9796

time Vm Tm Pbar

0.97*Y < Yc < 1.03*Y = .9782 < .9796 < 1.0075 PASS FAIL

SIGNATURE: DM DATE: 12/17/91 TIME: ~~4:30~~ pm 4:45 pm

PRELIMINARY TRAVERSE

SITE: | TEST#: | P.O#: | DATE:

	TRAV PT NO	PRESS DIFF ACROSS PIT TUBES, in H2O ΔP	STACK TEMP, °F °F th I
85	6	.11	90
85	5	.07	
85	4	.11	
	3	.16	83
	2	.17	160
	1	.18	
85	6	.02	
	5	.07	112
	4	.15	10
	3	.22	
	2	.25	109
	1	.19	
	AVG = .14		

TRAV PT NO	PRESS DIFF ACROSS PIT TUBES, in H2O ΔP	STACK TEMP, °F °F th I

.07 = .14

.25 / 2

	Prelim	Site	
Pm	29.8	29.8	from meter
Ps	29.6	29.6	from stack
Tm	90	90	from meter
ΔH@	2.7254	2.7254	
Bws	.24	.24	moisture
C	1.02	1.06	corr factor
Ts avg	125	125	temp stack
ΔPavg (trav)	.14	.14	
Dn(ideal)	.337	.335	ideal nozzle
Dn(actual)	.372	.398	nozzle used
ΔPavg (Dn actual)	.092	.060	
K	20.11	30.83	
ΔH avg (Dn actual)	2.81	4.32	
Cp	.84		
Y	.9787		

PRELIMINARY:

$\frac{(.6793 - .5304)}{(2-3)}(.81) + .6793 = .8066$

$\frac{50}{.8066} = 62\text{min} / 24 = 2.58 \cong 2.5 \frac{\text{min}}{\text{pt}}$

$\frac{2.5 \frac{\text{min}}{\text{pt}}}{\cos 85} = 28.68$ min

$t_{actual} = 28.68 \times \cos\theta$

SITE:

$\theta_{AVG} = 85$

Use .372 in for nozzle

SITE: Cameron Rock TEST#: 91351 P.O#: 25 DATE:

PIT (ΔP end) in. H2O - (ΔP start) in. H2O = (ΔP calc = 0 to Pass); (15 sec. min.) in H2O

PRE(+): 4.1 - 4.1 = 0 in 15 sec (P) F
PRE(-): 3.7 - 3.7 = 0 in 15 sec (P) F
POST(+): 4.5 - 4.5 = 0 in 15 sec (P) F
POST(-): 3.05 - 3.05 = 0 in 15 sec (P) F

VAC (Vend) - (Vstart) = (Vcalc =< 0.02 cfm) @ (vac) in 1 min

ft^3 ft^3 ft^3 in. Hg.

PRE: 847.754 - 847.758 = .004 @ 15 in 1 min (P) F
POST: 947.27 - 947.40 = .02 @ 15 in 1 min P (F)

OPER:
T1 corr: +.1 °F T2 corr: +.4 °F
Pbar: in Hg Ds: 9 ft
Ps: in H2O T amb: °F
Probe ID: SN7 I/S box: 0337
Probe len: 5 ft ΔH@: 2.7254
Cp: .843 Y: .9982
Dn: .376 in C. box: Blue 3/4

K= 20.11 time/pt= 2.5 min

TRA PT NO	SAMPLING TIME min	GAS METER ft3, Vm Vm	PRESS DIFF ACROSS PIT TUBES, in H2O ΔP	PRESS DIFF. ACROSS THE ORIFICE, in H2O ΔH DESIRED	ΔH ACTUAL	STACK TEMP, °F °F th I	BOX TEMP, °F °F th II	IMPINGER TEMP, °F °F th III	DRY GAS METER TEMP, °F INLET (T1)	OUTLET (T2)	PUMP VAC in. Hg	CLOCK TIME Hr:min
	0	897.810										
6	2.5	899.357	.02	.4	.4	118	195	48	70	84	.1	10:25
5	5	900.300	.025	.5	.5	119	226	45	70	90	.1	
4	7.5	901.990	.10	2.01	2.0	119	246	43	70	96	2.1	
3	10	904.131	.16	3.2	3.2	131	262	44	70	100	.3	
2	12.5	906.532	.22	4.4	4.4	113	271	44	70	104	8	
1	15	909.738	.22	4.4	4.4	113	276	44	70	103	10	10:34 stop
6	2.5	910.441	.03	.6	.6	120	[illegible]	46	72	89	.5	10:53 start
5	5	911.939	.03	.6	.6	126	169	45	71	96	.5	
4	7.5	913.353	.06	1.21	1.2	126	212	45	71	100	2	
3	10.0	915.386	.20	4.02	4	128	241	46	71	107	6	
2	12.5	917.911	.24	4.88	4.8	129	252	46	71	108	7	
1	15	920.422	.18	3.6	3.6	13	270	[illegible]	71	[illegible]	7	11:09 stop
6	2.5	922.387	.03	.6	.6	100	122	51	74	86	4	10:38 start
5	5	924.241	.07	1.4	1.4	115	161	51	73	99	4	
4	7.5	926.211	.13	2.6	2.6	125	203	50	73	104	5	
3	10	928.867	.23	4.6	4.6	127	234	50	73	107	8	
2	12.5	931.450	.24	4.8	4.8	131	250	51	74	106	10	
1	15	934.218	.20	4.02	4.0	134	257	57	74	106	10	
6	2.5	936.043	.02	.4	.4	133	206	55	74	99	5	11:58 start
5	5	937.623	.02	.4	.4	132	222	55	74	103	5	
4	7.5	939.622	.08	1.6	1.6	136	255	55	74	107	5	
3	10	941.721	.14	2.82	2.8	138	275	56	74	109	7	
2	12.5	944.161	.16	3.2	3.2	133	297	55	74	111	9	
1	15	946.658	.16	3.2	3.2	126	307	59	74	109	10	12:14 stop

To: Judy Lake via Bob Yelenosky

From: David Shina

Topic: Testing procedures and conditions at Canyon Rock

Date: 10/22/91

In a previous memo (10/10/91), I listed the obstacles to safely testing at Canyon Rock. I briefly discussed the options with you. Gary Smith and I paid Canyon rock another visit and we have come up with some, what we believe, are the best viable options. These options deviate from the District's standard methods for particulate sampling, and according to District policy, any deviations from the standard methods must be approved by the Senior Chemist.

1A) As per your suggestion, a wood board 6' L x 10" W x 1/2" D be anchored to the floor of the platform and the safety rails. The Impinger train and pitobe set-up will slide along the board. This is to replace the standard unirail configuration. The unirail cannot be used, because the unirail hits the middle safety rail of the platform. If this solution is used, a secondary problem arises (See #2 & #3)

1B) This unirail problem can be solved for future testing or for the current test, by raising the safety rails 4-8 inches. This is a deviation from the District's standard for a testing platform. Also, eye-bolts must be welded to the existing ring, because the current rings have rusted away. 3 of the 4 ports can be tested easily with this change, but the 4th port will require further modification of the safety rails. A 10 inch section must be cut out of the middle safety rail.

1D) Have the site raise the ports and add another stack extension.

2) If 1A is used, 3 of the 4 ports can be tested as they are now. The 4th port would have to be tested at a c.a. 10° angle. This is a deviation from the District's 92a testing standard. Since this site has cyclonic flow and must be tested at an angle anyway, this should not interfere with the isokinetics, but it is up to the Senior Chemist to make this decision.

3) If we use the 1A option, a decision must be made on the traverse points. A 3' probe requires a 6' board, while the 5' probe will require a 8' board. In our estimation, an 8' board cannot be adequately anchored to the platform; so, a 5' probe cannot be used. This leaves only the 3' probe. The 3' probe can accommodate 5 of the 6 traverse points perfectly, but the middle, 6th, point is c.a.30% short of the distance it should be, according to method 1. The method stipulates that the tester can alter the traverse points, e.g. for obstructions in the stack,. Since this is a deviation from the standard, you must make a decision if this is acceptable to you.

David Shina
Assistant Chemist

10/22/91

I have discussed this with David S.
We have decided to use the 5 ft. probe and slide the impinger train on a board instead of using a unirail.
The board and impinger train will be supported by ropes attached to the safety railing.
All four ports will be sampled.
On the one port where the safety rail support leg interferes with the impinger box, the probe may be angled slightly to go around this obstruction.
The test is to be scheduled as soon as the District and the site agree on a date. The test must be completed before the end of November 1991.

Bob Yelenosky

SAN DIEGO AIR POLLUTION CONTROL DISTRICT, 9150 CHESAPEAKE DRIVE, SAN DIEGO, CA. 92123

SOURCE TEST OF PARTICULATE EMISSIONS TO THE ATMOSPHERE

TEST SITE: Canyon Rock

TEST #: 91351 P.O.# 254 TEST DATE: 12/16/91

Type of plant (Asphalt /Perlite / Combustion) : asphalt

UNIT TESTED: Asphalt Plant

EQUIPMENT: Wet Scrubber

TESTED BY: DNS, GDS	DATE:
SITE PERSONNEL: G. DENNIS	DATE:
APCD ENGINEER: A. SEGAL	DATE:
LAB ANALYSIS BY: D. SHINA	DATE:
REPORT BY: D. SHINA	DATE:
REVIEWED BY: L. TWADDLE, D. SHINA	DATE:
APPROVED BY:	DATE:

ROBERT YELENOSKY, SENIOR AIR POLLUTION CHEMIST

This report has been reviewed and found to be representative of the testing that was performed.

TEST	PERMIT LIMIT	MEASURED	PERFORMANCE
RULE 54 DUST & FUMES	40 lbs/hr	13.20 lbs/hr	PASSED

SUMMARY:

ITEM	Vm	Bws	Cs	E	I	Qstd	ts	PROD RATE
UNITS	ft^3	%	gr/dscf	lbs/hr	%	dscfm	°F	tons/hr
VALUE	47.228	10.81	0.181	13.204	104	6.07E+04	125	

SYSTEM DESCRIPTION:

This asphalt plant combines crushed rock and and sand with asphalt oil in batch loads of varying sizes. The rock and sand are heated in a rotary drum to dry them. The exhaust from this dryer is routed through a baghouse and finally to a stack. It is the emissions from this stack that are the subject of this report.

PROCEDURES:

The procedures and equipment utilized in these tests are based on EPA New Source Performance Standards Method 5. The sampling train was modified to utilize a back-end filter and 5th impinger filled with silica gel (fig. 1), as outlined by the SDAPCD QA manual.

CALCULATIONS

All preliminary assumptions and calculations are based on data obtained from previous tests. All equations are from EPA CFR 40, July 1, 1990, Parts 53-60, Appendix A, Methods 1-5 inclusive.

PARTICULATE SAMPLING:

The test consisted of sampling at 32 traverse points, 4 from each of 8 sample ports (fig.2), collected from 18 inches below the stack (fig.3). All field data was transferred to the computer printout. All calculations were done by the computer and the emissions were compared to rule 54 of the SDAPCD.

ANALYSES:

Gas: An integrated bag sample was collected during the test and analyzed at the APCD lab.

Particulate: All procedures follow EPA guidelines, except where noted in the SDAPCD QA manual.

EQUIPMENT:

All testing and analysis equipment was calibrated according to EPA guidelines.

Analysis:	*Collection:*	*Sampling:*	*Temp./Press.:*
CO2-Anarad AR400	Filter-Gelman	L/S Box-Napp	Thermocouples-Omega
O2-Teledyne Ryan 320 P4	Holder-Gelman	Umbilical cord-Napp	Read out-Omega
Macrobalance-Sargent Welch	Beakers-Pyrex	Cold/Hot box-Napp	Barometric-calc. by APCD
Microbalance-Sartorious	Impingers-Ace	Pitobe tube-Napp	L/S box-Dwyer magnehelic

??SITE NAME?? on ??TEST DATE??

P.O.#????? TEST #?????

Trav. Pt	Vm (ft^3)	ΔP	ΔH	t 1(unc)	t 2(unc)	Stack Temp	Imp Temp	velocity
	897.81	(in H2O)	(in H20)	(°F)	(°F)	(°F)	(°F)	(ft/sec)
1		0.020	0.400	70.00	84.00	118.00	46	8.46
2		0.025	0.500	70.00	90.00	119.00	45	9.47
3		0.100	2.000	70.00	96.00	119.00	43	18.94
4		0.160	3.200	70.00	100.00	131.00	44	24.20
5		0.220	4.400	70.00	104.00	113.00	44	27.95
6		0.220	4.400	70.00	103.00	113.00	44	27.95
7		0.030	0.600	72.00	89.00	126.00	46	10.44
8		0.030	0.600	71.00	96.00	126.00	45	10.44
9		0.060	1.200	71.00	100.00	126.00	45	14.76
10		0.200	4.000	71.00	107.00	128.00	46	26.99
11		0.240	4.800	71.00	108.00	129.00	46	29.59
12		0.180	3.600	71.00	108.00	131.00	48	25.67
1		0.030	0.600	74.00	86.00	100.00	51	10.20
2		0.070	1.400	73.00	99.00	105.00	51	15.65
3		0.130	2.600	73.00	104.00	125.00	50	21.71
4		0.230	4.600	73.00	107.00	127.00	50	28.92
5		0.240	4.800	74.00	106.00	131.00	51	29.64
6		0.200	4.000	74.00	106.00	134.00	57	27.13
7		0.020	0.400	74.00	89.00	133.00	55	8.57
8		0.020	0.400	74.00	103.00	132.00	55	8.56
9		0.080	1.600	74.00	107.00	138.00	55	17.22
10		0.140	2.800	74.00	109.00	138.00	56	22.77
11		0.160	3.200	74.00	111.00	123.00	55	24.04
12	946.658	0.160	3.200	74.00	109.00	126.00	59	24.10

	Vm (ft*^3)	ΔP (in H2O)	ΔH (in H2O)	t 1 (°F)	t 2 (°F)	ts (°F)	ti (°F)	vs (ft/sec)
Average:	48.848	0.107	2.471	72.17	101.29	125	50	19.72

MISCELLANEOUS:

Ø = 60.0 min
tn = 24 points
ø = 2.5 min

NOZZLE & PROBE:

Dn = 0.372 in
An = 0.1087 in^2
Cp = 0.843

METER BOX PARAMETERS:

ΔH@ = 2.7254
Y = 0.9782
Box ID = D337

PRESSURES:

Pbar= 29.98 in Hg
Pg= 0.00 in H2O
Silica gel(yes/no) YES
Vpw @ ts= 3.95 in Hg
Vpw @ ti= 0.3626 in Hg

VOLUME:

start leak rate = 0.004 cfm
Pass/Fail PASS
final leak rate = 0.031 cfm
Pass/Fail FAIL
Vm 47.228 ft^3

TEMPERATURES:

t1 corr= 0.40 °F
t2 corr= 0.10 °F
tm= 87 °F
ts= 125 °F
ti = 50 °F

STACK PARAMETERS:

circular (yes/no) YES
Ds = 9.00 ft
Length = N/A ft
As = 63.59 ft^2

LAB DATA:

mn(front) = 0.01074 g
mn(back) = 0.51778 g
mn(total)= 0.52852 g
Vlc 115.38 ml

STACK GAS MEASUREMENTS:

CO2 = 3.30 %
O2 = 16.10 %
CO = 0.00 %
N2 = 80.60 %

velocity vs*cos 80°
1.18
1.32
2.65
3.39
3.91
3.91
1.46
1.46
2.06
3.78
4.14
3.59
1.43
2.19
3.04
4.05
4.15
3.80
1.20
1.20
2.41
3.19
3.36
3.37

vs (ft/sec)
2.76

TEMPERATURES:

01)	ts = (Σ ts(n))/total n's	125	°F
02)	Ts = ts+460	585	°R
03)	tm= (Σ {(t 1(n)+t 2t(n))/2}/total n's	87	°F
04)	Tm= (t1+t2)/2 + 460	547	°R
05)	ti= (Σ ti(n))/total n's	50	°F
06)	Tstd	528	°R

PRESSURES:

07)	Pbar= {(P @ S.L.)+[ft. above S.L.*(-0.1 in Hg/100ft)]}	29.98	in Hg
08)	Pg= read from pressure sensing device	0.00	in H2O
09)	Ps= Pbar + (Pg/13.6)	29.98	in Hg
10)	ΔH	2.47	in H20
11)	Pm= Pbar+(ΔH/13.6)	30.16	in Hg
12)	Pstd	29.92	in Hg

VOLUME:

13)	Vm= Vm(end)-Vm(begin)	47.228	ft^3
14)	Y	0.9782	
15)	Vm'= Vm*Y	46.198	ft^3
16)	Vpw @ ti = from appendix	0.0000	
17)	corr Vwm = {[(Vm'*Vpw@imp/Ps)*Pm*Tstd]/(Tm*Pstd)}	0.0000	ft^3
18)	Vm std = {[Vm'*(Tstd/Tm)*(Pm/Pstd)]-corr Vwm}	44.956	ft^3
19)	Vlc= (Σ Volume of impingers)	115.38	ml
20)	∂	0.002201	lb/ml
21)	R	21.85	Hg-ft^3/°R-lb-mo
22)	MwH2O	18.00	g/g-mo
23)	Vw std = {[(Vlc*∂*R*Tstd)/(Pstd*MwH2O)}+corr Vwm}	5.4459	ft^3

CALCULATIONS:

MOISTURE-

24)	Bws(1) =(Vw std)/(Vw std+Vm std)100	10.81	%	
25)	Vpw @ ts = from appendix	3.95	in Hg	
26)	Bws(2) =[(Vpw @ ts)/Ps]*100	13.19	%	
27)	Bws = lower value of equation 24 or 26			10.81 %

MOLECULAR WEIGHT-

28)	%O2	16.10	%
29)	%CO2	3.30	%
30)	%N2+inerts+%CO	80.60	%
31)	Md=[0.440(%CO2)]+[0.320*(%O2)]+[0.280(%N2+inerts+%CO)]	29.17	g/g*mole
32)	Ms=Md*(1-Bws)+18.0*(Bws)	27.96	g/g*mole

FLOW-

33)	ΔP	0.107	in H2O
34)	Cp	0.843	
35)	vs= 85.49*Cp*{[(Ts*ΔP)/(Ps*Ms)]^.5}	19.724	ft/s
		2.759	
36)	As=3.14*[(Ds)^2/4]	63.59	ft^2
37)	Qs = (vs)*As*60	7.52E+04	acfm
		1.05E+04	
38)	Qstd =17.64*Qs*(1-Bws)*Ps/Ts	6.07E+04	dscfm
		8.49E+03	

EMISSIONS-

FRONT HALF

39)	mn (front)		0.01074	g
40)	Cs (front) =15.43*mn(front)/Vm std	0.0037	0.004	grains/dscf
41)	E (front) = (0.00857)*(Qstd)*Cs (front)		1.92	lbs/hr
			0.27	

BACK HALF

42)	mn (back)		0.51778	g
43)	Cs (back) =15.43*mn(back)/Vm std	0.1777	0.178	grains/dscf
44)	E (back) = (0.00857)*(Qstd)*Cs (back)		92.47	lbs/hr
			12.94	

TOTAL

45)	mn (total) = mn(front)+mn(back)		0.52852	g
46)	Cs (total) =15.43*mn(total)/Vm std	0.1814	0.181	grains/dscf
47)	E (total) = (0.00857)*(Qstd)*Cs (total)		94.39	lbs/hr
			13.20	

ISOKINETICS:

48)	An=3.14*[(Dn)^2/4]		0.1087	in^2
49)	I=.09450(Ts*Vm std)/Ps*vsAnØ(1-Bws)	103.98 % =	104	%

SAN DIEGO AIR POLLUTION CONTROL DISTRICT, 9150 CHESAPEAKE DRIVE, SAN DIEGO, CA 92123

LABORATORY ANALYSIS OF PARTICULATE TEST

TEST SITE: CANYON ROCK

TEST # 91351.0	P.O.# 254	TEST DATE: 12/16/91
LAB ANALYSIS BY:	DNS	DATE:
LAB REPORT BY:	DNS	DATE:
REVIEWED BY:	DNS,LKT	DATE:

(1) IMPINGER VOLUMES

	FINAL WEIGHT		INITIAL WEIGHT		NET WEIGHT	
#1	710.12 g	-	554.18 g	=	155.94 g	
#2	491.99 g	-	541.33 g	=	-49.34 g	
#3	449.56 g	-	446.90 g	=	2.66 g	
#4	466.33 g	-	465.17 g	=	1.16 g	
SILICA GEL CONTAINER:						
#5	821.35 g	-	816.39 g	=	4.96 g	Tot. Vol.= 115.38 g

(2) BLANKS

STD = Net Wgt(solv) / Tot. Vol(solv. used)

ACETONE:		WATER:		ORGANIC:	
VOLUMES:		*VOLUMES:*		*VOLUMES:*	
BKR ID =	91128	BKR ID =	91144	BKR ID =	
Initial=	200.00 ml	Initial=	200.00 ml	Initial=	ml
tot. Rinses=	60.00 ml	tot. Rinses=	40.00 ml	tot. Rinses=	ml
Tot. Vol=	260.00 ml	Tot. Vol=	240.00 ml	Tot. Vol=	0.00 ml
WEIGHTS:		*WEIGHTS:*		*WEIGHTS:*	
final=	28.7250 g	final=	29.3159 g	final=	g
initial=	28.7239 g	initial=	29.3153 g	initial=	g
net=	0.0011 g	net=	0.0006 g	net=	0.0000 g
LIMIT: 0.001% = 10 ppm = 0.000010g/ml		LIMIT: 4ppm = 4mg/L = 0.000004g/ml		LIMIT: 0.001% = 10 ppm = 0.000010g/ml	
STD =	4.23077E-06 g/ml	STD =	2.50000E-06 g/ml	STD =	N/A g/ml
	0.000423 %		0.000250 %		N/A %
=	4.23 ppm		2.50 ppm		N/A ppm
The Blank	PASSED	The Blank	PASSED	The Blank	N/A

?? SITE NAME?? on ??TEST DATE

P.O.#?????? TEST#??????

(3) WEIGHT

FRONT HALF

ACETONE

WEIGHT (uncorrected):

BKR ID= 91112
final= 28.7660 g
initial= 28.7544 g
Wgt. Ac= 0.0116 g

VOLUME:

Initial= 150.00 ml
tot. rinses= 60.00 ml
Sep funnel= ____ ml
Tot. Vol= 210.00 ml

WEIGHT FROM SOLVENT:

Total Vol * Acetone STD = 0.000888 g

WEIGHT (corrected):

Wgt(corr)= Wgt(unc)-Wgt from solvent= 0.010712 g

WATER:

WEIGHT (uncorrected):

BKR ID= 91058
final= 49.7414 g
initial= 49.7407 g
Wgt. Water= 0.0007 g

VOLUMES:

Initial= 250.00 ml
tot. Rinses= 20.00 ml
Tot. Vol = 270.00 ml

WEIGHT FROM SOLVENT:

Total Vol * Water STD = 0.000675 g

WEIGHT (corrected):

Wgt(corr)= Wgt(unc)-Wgt. from solvent= 0.000025 g

ORGANIC:

WEIGHT (uncorrected):

BKR ID= ____
final= ____ g
initial= ____ g
Wgt. Org= 0.0000 g

VOLUMES:

tot. Rinses= ____ ml
Tot. Vol= 0.00 ml

WEIGHT FROM SOLVENT:

Total Vol * Organic STD = N/A g

WEIGHT (corrected):

Wgt(corr)= Wgt(unc)-Wgt from solvent= N/A g

FILTERS:

WEIGHT:

ID No.= ____
final= ____ g
initial= ____ g
Wgt. Filter= 0.0000 g

BACK HALF

ACETONE

WEIGHT (uncorrected):

BKR ID= 91120
final= 29.4415 g
initial= 29.1267 g
Wgt. Ac.= 0.3148 g

VOLUME:

Initial= 400.00 ml
tot. Rinses= 60.00 ml
Sep. funnel= ____ ml
Tot. Vol= 460.00 ml

WEIGHT FROM SOLVENT:

Total Vol * Acetone STD = 0.001946 g

WEIGHT (corrected):

Wgt(corr)= Wgt(unc)-Wgt from solvent= 0.312854 g

WATER:

WEIGHT (uncorrected):

BKR ID= 91056
final= 28.8819 g
initial= 28.7654 g
Wgt. Water= 0.1165 g

VOLUMES:

Initial= 650.00 ml
tot. Rinses= 60.00 ml
imp. charge= 199.14 ml
Tot. Vol= 909.14 ml

WEIGHT FROM SOLVENT:

Total Vol * Water STD = 0.002273 g

WEIGHT (corrected):

Wgt(corr)= Wgt(unc)-Wgt from solvent= 0.114227 g

ORGANIC:

WEIGHT (uncorrected):

BKR ID= ____
final= ____ g
initial= ____ g
Wgt. Org= 0.0000 g

VOLUMES:

tot. Rinses= ____ ml
Tot. Vol= 0.00 ml

WEIGHT FROM SOLVENT:

Total Vol * Organic STD = N/A g

WEIGHT (corrected):

Wgt(corr)= Wgt(unc)-Wgt from solvent= N/A g

FILTERS:

WEIGHT:

ID No.= 89085
final= 1.6826 g
initial= 1.5919 g
Wgt. Filter= 0.0907 g

PARTICULATE COLLECTED (front half):

ΣWgt corrected + Wgt filter= mn (front)= 0.01074 g

PARTICULATE COLLECTED (back half):

ΣWgt corrected + Wgt filter= mn (back)= 0.51778 g

TOTAL PARTICULATE COLLECTED:

mn(front) + mn(back) = 0.52852 g