Note: This is a reference cited in *AP 42, Compilation of Air Pollutant Emission Factors, Volume I Stationary Point and Area Sources.* AP42 is located on the EPA web site at www.epa.gov/ttn/chief/ap42/

The file name refers to the reference number, the AP42 chapter and section. The file name "ref02_c01s02.pdf" would mean the reference is from AP42 chapter 1 section 2. The reference may be from a previous version of the section and no longer cited. The primary source should always be checked.

APPENDIX K

OEPA STACK TEST REVIEW SUMMARY FORM

APPLICATION NUMBER 0829790411

FACILITY NAME Southern Ohio Asphalt Plant #48

SOURCE DESCRIPTION (OR SCC CODE)

Asphaltic Concrete Batch Plant

CONTROL EQUIPMENT Baghouse

DATE(S) OF TEST 5-13-94

FINAL TEST REPORT RECEIVED ON 6-8-94

POLLUTANT(S) TESTED PM

TEST METHOD Method 5

TEST FIRM The Shelly Co.

EMISSION RATES*:

ACTUAL (lb(s)/hr) .009 gr/DSCF ALLOWABLE** .04 gr/DSCF

OPERATING RATES*:

DURING TEST** 140 Tn/hr MAXIMUM** 146 Tn/hr

EMISSION FACTOR***

COMMENTS:

I HEREBY VERIFY THAT THE INFORMATION CONTAINED WITHIN THE STACK TEST REPORT HAS BEEN REVIEWED AND IT HAS BEEN DETERMINED THAT THE TEST PROCEDURES, ANALYSES AND CALCULATIONS ARE:

[X] AN ACCEPTABLE DEMONSTRATION OF CONFORMANCE WITH THE APPROVED TESTING METHODOLOGY.

[ ] AN UNACCEPTABLE DEMONSTRATION OF CONFORMANCE WITH THE APPROVED TESTING METHODOLOGY.

6-14-94

DATE OF REVIEW

Jon Hietz

REVIEWED BY

* BASED ON 3 RUN AVERAGE

** SPECIFY APPLICABLE UNITS

***SPECIFY IN UNITS OF MASS/INPUT

asphalt

CONTACT REPORT

FACILITY: Southern Ohio Asphalt

CONTACT: Jim Christman

RAPCA REPS.: Cathy O'Neill & Jon Hilty

DATE: 5-13-94

RE: Stack Test

On May 13, 1994, a stack test was conducted on a Hot-Mix Asphalt Plant (OEPA source no. P001). The test incorporated three, one-hour runs. Jon Hilty was on site observing the stack test crew's implementation of USEPA approved testing procedures. Meanwhile, I observed the plant operating parameters in the control room and took visible emission readings.

The operating parameters are as follows:

Run # 1
Start: 8:13 AM End: 9:13 AM

Time:	8:14 AM	8:45 AM	9:13 AM
Mix rate (TPH):	131	132	138
Baghouse Inlet Temperature:	215	230	225
Magnehelic:	5	4.5	5
Type of Mix:		Virgin Mix	
Average rate during run:		140 TPH	

Run # 2
Start: 9:40 AM End: 10:42 AM

Time:	9:41 AM	10:09 AM	10:45 AM
Mix rate (TPH):	133	146	144
Baghouse Inlet Temperature:	220	220	225
Magnehelic:	4.5	5	5
Type of Mix:		Virgin Mix	
Average rate during run:		144 - 145 TPH	

Run 3
Start: 11:13 AM End: 12:13 PM

Time:	11:13 AM	11:38 AM	12:11 PM
Mix rate (TPH):	145	144	144
Baghouse Inlet Temperature:	220	220	210
Magnehelic:	5	5	3.5
Type of Mix:		Virgin Mix	
Average rate during run:		145 - 147 TPH	

The source appeared to be in good condition and no obvious problems were noted. The visible emissions readings taken during each run were very good, no exceedences were observed. (VE readings are attachmented).

Visible Emission Observation Form Run #3

SOURCE NAME	Southern Ohio Asphalt
ADDRESS	
CITY	Spring Valley
STATE	Oh
ZIP	
PHONE	
SOURCE ID NUMBER	
PROCESS EQUIPMENT	Hot mix Asphalt Plant
OPERATING MODE	ON
CONTROL EQUIPMENT	Baghouse
OPERATING MODE	ON
DESCRIBE EMISSION POINT START	Round metal stack
STOP	
HEIGHT ABOVE GROUND LEVEL START	≈30'
STOP	✓
HEIGHT RELATIVE TO OBSERVER START	≈30'
STOP	✓
DISTANCE FROM OBSERVER START	≈150'
STOP	✓
DIRECTION FROM OBSERVER START	W
STOP	✓
DESCRIBE EMISSIONS START	Heat like waves - vertical plume
STOP	
EMISSION COLOR START	Clear
STOP	✓
PLUME TYPE: CONTINUOUS ☒ FUGITIVE ☐ INTERMITTENT ☐	
WATER DROPLETS PRESENT: NO ☒ YES ☐	
IF WATER DROPLET PLUME: ATTACHED ☐ DETACHED ☐	
POINT IN THE PLUME AT WHICH OPACITY WAS DETERMINED START	1 stack width from top of stack
STOP	✓
DESCRIBE BACKGROUND START	Sky/Clouds
STOP	✓
BACKGROUND COLOR START	wt/bl.
STOP	✓
SKY CONDITIONS START	overcast
STOP	✓
WIND SPEED START	≈0-3 mph
STOP	✓
WIND DIRECTION START	S
STOP	✓
AMBIENT TEMP. START	≈65°F
STOP	✓
WET BULB TEMP.	
RH, percent	

Source Layout Sketch

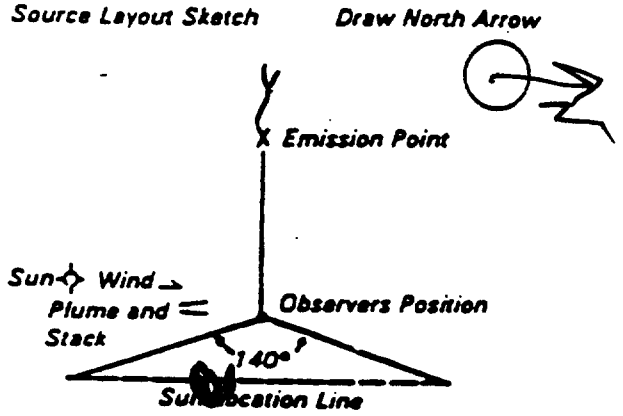

OBSERVATION DATE	START TIME	STOP TIME
5/13/94	11:16 pm	11:34

MIN \ SEC	0	15	30	45	MIN \ SEC	0	15	30	45
1	Ø	Ø	Ø	Ø	31				
2	Ø	Ø	Ø	Ø	32				
3	Ø	Ø	Ø	Ø	33				
4	Ø	Ø	Ø	Ø	34				
5	Ø	Ø	Ø	Ø	35				
6	Ø	Ø	Ø	Ø	36				
7	Ø	Ø	Ø	Ø	37				
8	Ø	Ø	Ø	Ø	38				
9	Ø	Ø	Ø	Ø	39				
10	Ø	Ø	Ø	Ø	40				
11	Ø	Ø	Ø	Ø	41				
12	Ø	Ø	Ø	Ø	42				
13	Ø	Ø	Ø	Ø	43				
14	Ø	Ø	Ø	Ø	44				
15	Ø	Ø	Ø	Ø	45				
16	Ø	Ø	Ø	Ø	46				
17	Ø	Ø	Ø	Ø	47				
18	Ø	Ø	Ø	Ø	48				
19					49				
20					50				
21					51				
22					52				
23					53				
24					54				
25					55				
26					56				
27					57				
28					58				
29					59				
30					60				

AVERAGE OPACITY FOR HIGHEST PERIOD	NUMBER OF READINGS ABOVE % WERE
RANGE OF OPACITY READINGS MINIMUM	MAXIMUM
OBSERVER'S NAME (PRINT)	Catherine O'Neill
OBSERVER'S SIGNATURE	Catherine O'Neill
DATE	5/13/94
ORGANIZATION	RAPCA
CERTIFIED BY	ETA
DATE	3/4/94
VERIFIED BY	
DATE	

COMMENTS

I HAVE RECEIVED A COPY OF THESE OPACITY OBSERVATIONS

SIGNATURE

TITLE

DATE

Visible Emission Observation Form

Run # 2

SOURCE NAME	Southern Ohio Asphalt
ADDRESS	
CITY	Spring Valley
STATE	Oh
ZIP	
PHONE	
SOURCE ID NUMBER	
PROCESS EQUIPMENT	Hot Mix Asphalt Plant
OPERATING MODE	ON
CONTROL EQUIPMENT	Baghouse
OPERATING MODE	ON
DESCRIBE EMISSION POINT START	Round metal stack STOP ✓
HEIGHT ABOVE GROUND LEVEL START	≈30' STOP ✓
HEIGHT RELATIVE TO OBSERVER START	≈30 STOP ✓
DISTANCE FROM OBSERVER START	≈300' STOP ✓
DIRECTION FROM OBSERVER START	W STOP ✓
DESCRIBE EMISSIONS START	vertical plume STOP ✓
EMISSION COLOR START	wt STOP ✓
PLUME TYPE: CONTINUOUS ☒ FUGITIVE ☐ INTERMITTENT ☐	
WATER DROPLETS PRESENT: NO ☐ YES ☒	
IF WATER DROPLET PLUME: ATTACHED ☒ DETACHED ☐	
POINT IN THE PLUME AT WHICH OPACITY WAS DETERMINED START	end of steam plume STOP ✓
DESCRIBE BACKGROUND START	sky / clouds STOP ✓
BACKGROUND COLOR START	bl/wt STOP ✓
SKY CONDITIONS START	overcast STOP ✓
WIND SPEED START	0-3mph STOP ✓
WIND DIRECTION START	S STOP ✓
AMBIENT TEMP START	≈50°F STOP ✓
WET BULB TEMP.	
RH.percent	

Source Layout Sketch

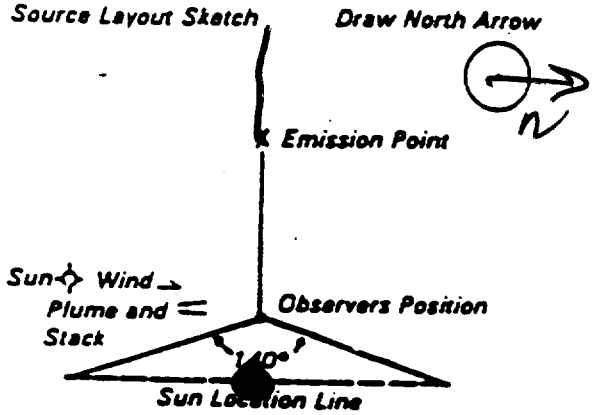

OBSERVATION DATE	START TIME	STOP TIME
5/13/94	9:48 Am	10:06

MIN \ SEC	0	15	30	45	MIN \ SEC	0	15	30	45
1	Ø	Ø	Ø	Ø	31				
2	5	Ø	Ø	Ø	32				
3	Ø	Ø	Ø	Ø	33				
4	Ø	5	Ø	Ø	34				
5	Ø	5	Ø	Ø	35				
6	Ø	Ø	Ø	Ø	36				
7	Ø	Ø	Ø	Ø	37				
8	Ø	Ø	Ø	Ø	38				
9	Ø		Ø	Ø	39				
10	Ø	Ø	Ø	Ø	40				
11	Ø	Ø	Ø	Ø	41				
12	Ø	Ø	Ø	Ø	42				
13	Ø	Ø	Ø	Ø	43				
14	Ø	Ø	Ø	Ø	44				
15	Ø	Ø	5	Ø	45				
16	Ø	Ø	Ø	Ø	46				
17	Ø	Ø	Ø	Ø	47				
18	Ø	Ø	Ø	Ø	48				
19					49				
20					50				
21					51				
22					52				
23					53				
24					54				
25					55				
26					56				
27					57				
28					58				
29					59				
30					60				

AVERAGE OPACITY FOR HIGHEST PERIOD	NUMBER OF READINGS ABOVE % WERE
RANGE OF OPACITY READINGS MINIMUM	MAXIMUM
OBSERVER'S NAME (PRINT)	Catherine O'Neill
OBSERVER'S SIGNATURE	Catherine O'Neill — DATE 5/13/94
ORGANIZATION	RAPCA
CERTIFIED BY	ETA — DATE 3/2/94
VERIFIED BY	DATE

COMMENTS

I HAVE RECEIVED A COPY OF THESE OPACITY OBSERVATIONS
SIGNATURE
TITLE
DATE

Visible Emission Observation Form Run #1

SOURCE NAME	Southern Ohio Asphalt
ADDRESS	
CITY	Spring Valley
STATE	Oh
ZIP	
PHONE	
SOURCE ID NUMBER	
PROCESS EQUIPMENT	Hot mix Asphalt Plant
OPERATING MODE	ON
CONTROL EQUIPMENT	Baghouse
OPERATING MODE	ON
DESCRIBE EMISSION POINT	START Round metal stack STOP
HEIGHT ABOVE GROUND LEVEL	START = 30' STOP
HEIGHT RELATIVE TO OBSERVER	START = 30' STOP
DISTANCE FROM OBSERVER	START = 300' STOP
DIRECTION FROM OBSERVER	START W STOP
DESCRIBE EMISSIONS	START Vertical plume STOP
EMISSION COLOR	START wt STOP
PLUME TYPE: CONTINUOUS ☑ FUGITIVE ☐ INTERMITTENT ☐	
WATER DROPLETS PRESENT: NO ☐ YES ☑	
IF WATER DROPLET PLUME: ATTACHED ☑ DETACHED ☐	
POINT IN THE PLUME AT WHICH OPACITY WAS DETERMINED	START end of Steam STOP
DESCRIBE BACKGROUND	START Sky, clouds STOP
BACKGROUND COLOR	START blue STOP
SKY CONDITIONS	START overcast STOP
WIND SPEED	START 0-3 mph STOP
WIND DIRECTION	START S STOP
AMBIENT TEMP.	START 45°F STOP
WET BULB TEMP.	
RH, percent	

OBSERVATION DATE	START TIME	STOP TIME
5/13/94	8:23 AM	8:41 AM

MIN \ SEC	0	15	30	45	MIN \ SEC	0	15	30	45
1	0	0	0	0	31				
2	0	0	0	0	32				
3	0	0	0	0	33				
4	0	0	0	0	34				
5	0	0	0	0	35				
6	0	0	0	0	36				
7	0	0	0	0	37				
8	0	0	0	0	38				
9	5	0	0	0	39				
10	0	0	5	0	40				
11	5	0	0	0	41				
12	0	0	0	0	42				
13	0	0	5	5	43				
14	5	0	0	0	44				
15	0	0	5	5	45				
16	0	0	0	0	46				
17	0	0	0	0	47				
18	0	0	0	0	48				
19					49				
20					50				
21					51				
22					52				
23					53				
24					54				
25					55				
26					56				
27					57				
28					58				
29					59				
30					60				

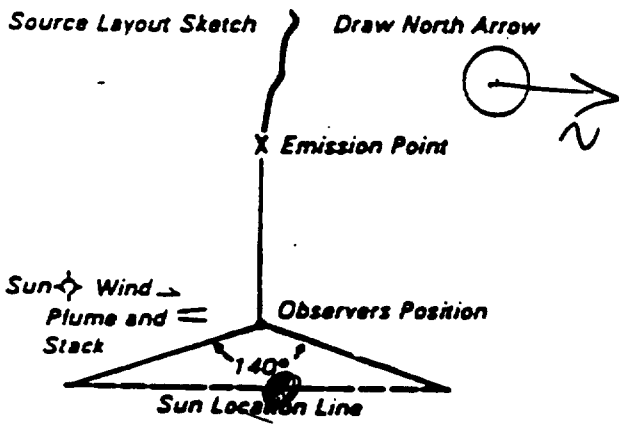

AVERAGE OPACITY FOR HIGHEST PERIOD	NUMBER OF READINGS ABOVE % WERE
RANGE OF OPACITY READINGS MINIMUM	MAXIMUM
OBSERVER'S NAME (PRINT)	Catherine O'Neill
COMMENTS	
OBSERVER'S SIGNATURE	Catherine O'Neill
DATE	5/13/94
ORGANIZATION	RAPCA
I HAVE RECEIVED A COPY OF THESE OPACITY OBSERVATIONS SIGNATURE	
CERTIFIED BY	ETA
DATE	3/2/94
TITLE	
DATE	
VERIFIED BY	
DATE	

PARTICULATE EMISSION TEST REVIEW SHEET

1. Facility Name: Southern Ohio Asphalt Plant #42
2. Run Number: _____
3. Test Date: 5-13-94
4. Time of Test: 60 (min)
5. Volume Metered: 45.333 50.292 52.388 (ft^3)
6. Dry Gas Meter Calb. Factor: 1.01
7. Test Barometric Pressure: 29.13 (in. Hg)
8. Avg. Delta H: 1.16 1.13 1.15 (in. H_2O)
9. Avg. Meter Temp: 75 88 94 (Deg. F)
10. Volume H_2O (Impingers): 192.9 207.4 203 (ML)
11. Weight Gain of Silica Gel: — — — (GM)
12. % CO_2: 5 5 5
13. % CO: —
14. % O_2: 13 13 13
15. % N_2: 82 82 82
16. Static Pressure of Stack: -.62 (in. H_2O)
17. Stack Temp: 180 184 187 (Deg. F)
18. Pitot Coefficient: .84
19. Avg. Root Delta P: 1.07 1.05 1.07
20. Stack Diameter: 42 (in.)
21. Mass Particulate: 24.9 28 29.2 (mg)
22. Nozzle Diameter: .1235 (in.)

Coal Data

1. % Hydrogen: _____
2. % Carbon: _____
3. % Sulfur: _____
4. % Nitrogen: _____
5. % Oxygen: _____
6. F Factor: _____
7. Gross Calorific Value: _____

==========

PARTICULATE EMISSION TEST DATA

FACILITY :southern ohio asphalt plant #48
PROCESS/RUN NUMBER :
SOURCE/RUN :1
TEST DATE :5-13-94

****

VOLUME METERED AT STD. CONDITIONS	= 46.12255849783178 DSCF
VOLUME WATER COLLECTED AT STP.	= 9.079803 SCF
PERCENT MOISTURE BY VOLUME	= 16.44821481116643 %
MOLECULAR WEIGHT OF STACK GAS	= 27.45806208337596 LB/LB-MOL
PERCENT EXCESS AIR	= 150.3237742830712 %
AVERAGE STACK GAS VELOCITY	= 67.66737204455806 FT/SEC
ABSOLUTE STACK PRESSURE	= 30.05441176470588 IN. HG
STACK FLOW RATE AT ACTUAL COND.	= 39056.30793057565 ACFM
STACK FLOW RATE AT STD. COND.	= 27031.72488708912 DSCFM
STACK EMISSIONS	= 8.313936010683936E-003 GR/DSCF
	= 1.188061455926734E-006 LB/DSCF
STACK EMISSION RATE	= 1.926921025533962 LB/HR
ISOKINETIC VARIATION	= 90.82453765485317 %

****

TIME OF TEST	= 60 MIN
VOLUME METERED	= 45.883 CU.FT
DRY GAS METER CALB. FACT.	= 1.01
TEST BAR. PRESSURE	= 30.1 IN HG
AVERAGE DELTA H	= 1.16
AVG. METER TEMP.	= 75 DEG. F
VOL. H2O (IMPINGERS)	= 192.9 ML
WEIGHT GAIN OF SILICA GEL	= 0 GM
%CO2	= 5 %
%CO	= 0 %
%O2	= 13 %
%N2	= 82 %
STATIC P OF STACK	=-.62 IN. H2O
STACK TEMP.	= 180 DEG. F
PITOT COEFFICIENT	= .84
AVG. ROOT DELTA P	= 1.07
STACK DIAMETER	= 42 IN.
MASS PARTICULATE	= 24.9 MG
NOZZLE DIAMETER	= .235 IN

****

==========

PARTICULATE EMISSION TEST DATA

FACILITY :southern ohio asphalt plant #48
PROCESS/RUN NUMBER :
SOURCE/RUN :2
TEST DATE :5-13-94

****

VOLUME METERED AT STD. CONDITIONS	= 49.35168398165952 DSCF
VOLUME WATER COLLECTED AT STP.	= 9.762318 SCF
PERCENT MOISTURE BY VOLUME	= 16.51439197608177 %
MOLECULAR WEIGHT OF STACK GAS	= 27.45057082830755 LB/LB-MOL
PERCENT EXCESS AIR	= 150.3237742830712 %
AVERAGE STACK GAS VELOCITY	= 67.25329949690759 FT/SEC
ABSOLUTE STACK PRESSURE	= 30.05441176470588 IN. HG
STACK FLOW RATE AT ACTUAL COND.	= 38817.31320626472 ACFM
STACK FLOW RATE AT STD. COND.	= 26678.29262918598 DSCFM
STACK EMISSIONS	= 8.737290507862835E-003 GR/DSCF
	= 1.248558813573599E-006 LB/DSCF
STACK EMISSION RATE	= 1.998565043595945 LB/HR
ISOKINETIC VARIATION	= 98.47082504005503 %

****

TIME OF TEST	= 60 MIN
VOLUME METERED	= 50.292 CU.FT
DRY GAS METER CALB. FACT.	= 1.01
TEST BAR. PRESSURE	= 30.1 IN HG
AVERAGE DELTA H	= 1.13
AVG. METER TEMP.	= 88 DEG. F
VOL. H2O (IMPINGERS)	= 207.4 ML
WEIGHT GAIN OF SILICA GEL	= 0 GM
%CO2	= 5 %
%CO	= 0 %
%O2	= 13 %
%N2	= 82 %
STATIC P OF STACK	=-.62 IN. H2O
STACK TEMP.	= 184 DEG. F
PITOT COEFFICIENT	= .84
AVG. ROOT DELTA P	= 1.06
STACK DIAMETER	= 42 IN.
MASS PARTICULATE	= 28 MG
NOZZLE DIAMETER	= .235 IN

****

==========

PARTICULATE EMISSION TEST DATA

FACILITY :southern ohio asphalt #48
PROCESS/RUN NUMBER :
SOURCE/RUN :3
TEST DATE :5-13-94

****

VOLUME METERED AT STD. CONDITIONS	= 50.85420170806329 DSCF
VOLUME WATER COLLECTED AT STP.	= 9.555210000000001 SCF
PERCENT MOISTURE BY VOLUME	= 15.81741938851657 %
MOLECULAR WEIGHT OF STACK GAS	= 27.52946812521993 LB/LB-MOL
PERCENT EXCESS AIR	= 150.3237742830712 %
AVERAGE STACK GAS VELOCITY	= 67.94812775050643 FT/SEC
ABSOLUTE STACK PRESSURE	= 30.05441176470588 IN. HG
STACK FLOW RATE AT ACTUAL COND.	= 39218.3547335395 ACFM
STACK FLOW RATE AT STD. COND.	= 27052.9193418625 DSCFM
STACK EMISSIONS	= 8.842533849640592E-003 GR/DSCF
	= 1.263598087113641E-006 LB/DSCF
STACK EMISSION RATE	= 2.051041027873024 LB/HR
ISOKINETIC VARIATION	= 100.0634836055504 %

****

TIME OF TEST	= 60 MIN
VOLUME METERED	= 52.388 CU.FT
DRY GAS METER CALB. FACT.	= 1.01
TEST BAR. PRESSURE	= 30.1 IN HG
AVERAGE DELTA H	= 1.15
AVG. METER TEMP.	= 94 DEG. F
VOL. H2O (IMPINGERS)	= 203 ML
WEIGHT GAIN OF SILICA GEL	= 0 GM
%CO2	= 5 %
%CO	= 0 %
%O2	= 13 %
%N2	= 82 %
STATIC P OF STACK	=-.62 IN. H2O
STACK TEMP.	= 187 DEG. F
PITOT COEFFICIENT	= .84
AVG. ROOT DELTA P	= 1.07
STACK DIAMETER	= 42 IN.
MASS PARTICULATE	= 29.2 MG
NOZZLE DIAMETER	= .235 IN

****

THE SHELLY CO.
P.O. BOX 266
THORNVILLE, OHIO 43076
(614)-246-6315

OK
6-14-94

HOT MIX ASPHALT FACILITY EMISSION COMPLIANCE EVALUATION

SOUTHERN OHIO ASPHALT
PLANT #48
MAY 13, 1994

I, Larry E. Shively certify that to the best of my knowledge all applicable State and Federal test procedures were followed.

Larry E. Shively
THE SHELLY COMPANY
AIR QUALITY CONTROL MANAGER

I certify that all tests and data remained under my direct control.

Ted Green
STACK TESTING CREW

TABLE OF CONTENTS

1. INTRODUCTION

2. THE SOURCE

3. TEST PROCEDURES

4. FIELD DATA SHEETS

5. TEST SUMMARY

Asphalt Cement Plant Baghouse Outlet Compliance

Emission Evaluation for the

Southern Ohio Asphalt

Plant #48

1.0 INTRODUCTION

The Shelly Company of Thornville, Ohio, conducted a compliance emission test on the baghouse outlet stack of Southern Ohio Asphalt Plant #48 located at Spring Valley, Ohio. The test was conducted on May 13, 1994.

The tests were conducted in order to determine compliance with current Ohio EPA and U.S. EPA particulate emission regulations. All tests were performed in accordance with procedures and requirements established by U.S. EPA and the Ohio EPA.

The emissions for three test runs at the outlet stack averaged .0086 grains per dry standard cubic foot and 1.99 pounds per hour.

2.0 THE SOURCE

The following is information concerning THE SOURCE:

A. **SOURCE IDENTIFICATION:** PLANT #48

B. **LOCATION:** SPRING VALLEY, OHIO

C. **PLANT DESCRIPTION:** BATCH PLANT

D. **TYPE OF FUEL:** #2 FUEL OIL

E. **TYPE OF MIX:** ODOT 402 AND 404

F. **TYPE OF EMISSION CONTROL EQUIPMENT:** BAGHOUSE

G. **STACK DIMENSIONS:** 42.0" DIAMETER

H. **TEST LOCATION (See next page for locations):**

I. **TEST TIME:** 60 MINUTES

J. **TEST DATE:** 05-13-94

K. **TESTING COMPANY:** THE SHELLY COMPANY

L. **SAMPLING TEAM:** TED GREEN, KEITH OLIVE,CURT WARD

M. **EPA REPRESENTATIVE:** JON HILTY RAPCA

N. **REMARKS:**

3. TEST PROCEDURES

3.1 OBJECTIVES

The following methods of sampling will be employed in the test program:

Testing will be conducted to determine the following:

A. Gas Volume - ACFM and SCFM
B. Gas Temperature - F
C. Moisture - % by volume
D. Flue Gas Molecular Weight - % by volume O_2, CO_2 and (N_2 & CO) by difference.
E. Stack Gas Velocity - feet per second
F. Particulate Emissions - grains/DSCF, lbs./hr.

An illustration of sample train Figure 2.

3.2 METHODS OF TESTS:

A. Sampling and traverse locations were determined as per Method One of the Federal Register, Volume 40, Part 60, App. A 7-1-92.

B. Gas Flow, gas temperature, and static pressure measurements were made as per Method Two of the Federal Register, Volume 40, Part 60, 7-1-92.

C. Excess air and molecular weight determinations were made as per Method Three of the Federal Register, Volume 40, Part 60, 7-1-92.

D. Moisture content sampling was conducted as per Method Four of the Federal Register, Volume 40, Part 60, 7-1-92.

E. Particulate sampling was conducted as per Method Five of the Federal Register, Volume 40, Part 60, 7-1-92.

3.3 ANALYTICAL METHODS

All samples generated during the test program were analyzed by The Shelly Company at The Shelly Company Laboratory in Thornville, Ohio.

3.4 EQUIPMENT CALIBRATION

All flow measurement equipment was inspected and a

calibration factor of .84 was assumed as per instructions in Method 2, Section 4.1, of the Federal Register, Volume 40, Part 60, 7-1-92 for pitot tubes.

A. Nozzle Diameter

Probe nozzles were field calibrated with NBS traceable micrometers as per instructions in Method 5 of the Federal Register, Volume 40, Part 60, 7-1-92.

B. Metering System

The metering system was calibrated before field use and a post-test calibration was performed after the test program in accordance with Method 5 of the Federal Register, Volume 40, Part 60, 7-1-92.

4. FIELD DATA SHEETS

The field data sheets generated during the test are contained in the next section.

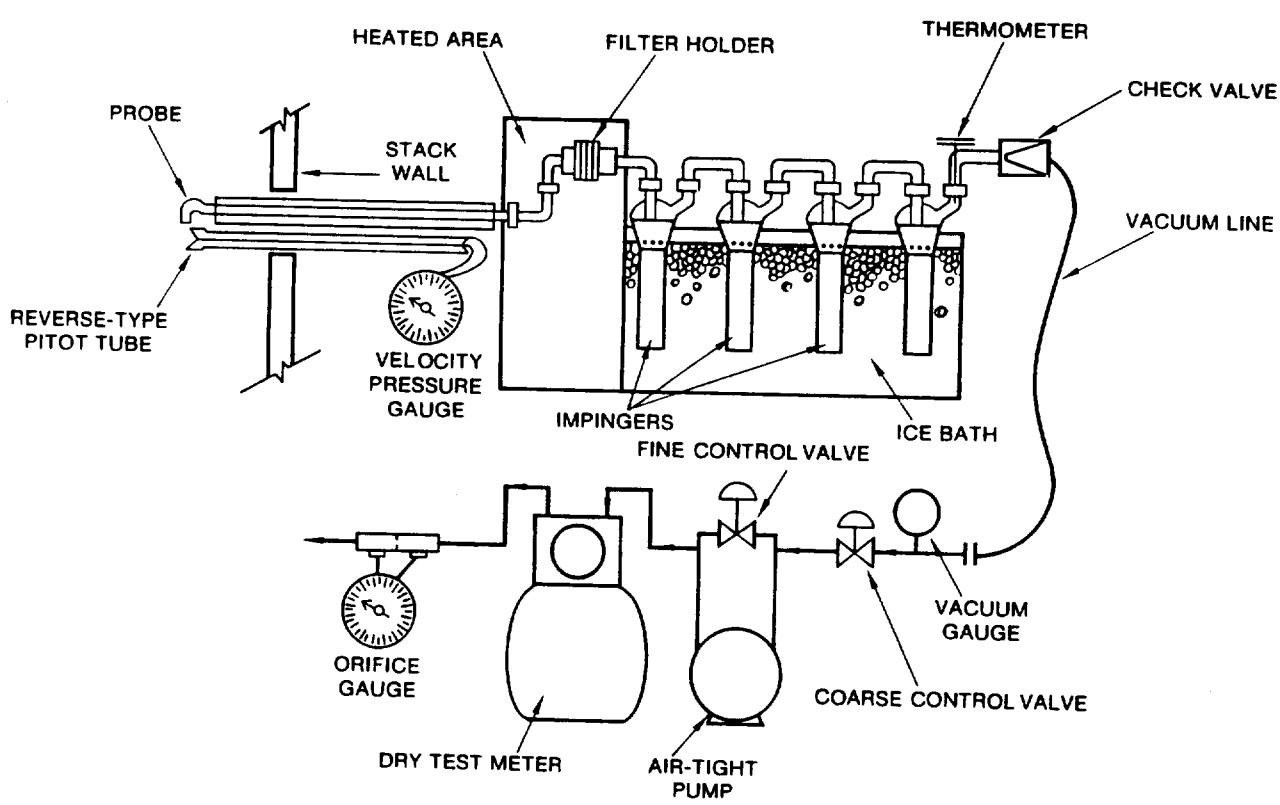

Figure 1

PLANT 48
LOCATION stack outlet
DATE 5-14-94 RUN NO. 1
STACK INNER DIAMETER, m (in.) 42"
BAROMETRIC PRESSURE, mm Hg (in. Hg) 30.10
CROSS SECTIONAL AREA, m^2 (ft^2)
OPERATORS Brew / Olive
PITOT TUBE I.D. NO. 4 ft
AVG. COEFFICIENT, Cp = .84
LAST DATE CALIBRATED 4-27-94

SCHEMATIC OF STACK CROSS SECTION

Cyclonic	TRAVERSE PT. No.	VEL. Hd. Δp mm (in.) H_2O	STACK TEMPERATURE t_s °C (°F)	T_s °K (°R)	P_g mm Hg (in. Hg)	$\sqrt{\Delta p}$
0	A1	.94	185			
0	2	1.1	186			
0	3	1.2	187			
0	4	1.2	188			
0	5	1.2	189			
5°	6	1.2	189	-.62		
4°	7	1.2	196			
1°	8	1.2	190			
0	9	1.2	190			
0	10	1.2	190	-.62		
0	11	1.1	190			
0	12	1.1	190			
0	B1	1.2	188			
0	2	1.3	189			
0	3	1.4	191			
0	4	1.4	191	-.65		
0	5	1.4	192			
0	6	1.3	191			
0	7	1.2	191			
0	8	1.1	191	-.62		
0	9	1.1	191			
0	10	1.1	190			
0	11	1.1	190			
0	12	1.1	190			
			AVERAGE			

1/80

174 .90

* TRAVERSE POSITIONS IN ROUND STACK *

Plant : 48 SOUTHERN OHIO ASPHALT

Inside of Near Wall to
outside of Nipple : 3.0 inches

Number of Points : 12

Area of Round Stack : 9.62 sq. ft.

Point	Distance	Nipple	Total Dist
1	0.9	3.00	3.9
2	2.8	3.00	5.8
3	5.0	3.00	8.0
4	7.4	3.00	10.4
5	10.5	3.00	13.5
6	14.9	3.00	17.9
7	27.1	3.00	30.1
8	31.5	3.00	34.5
9	34.6	3.00	37.6
10	37.0	3.00	40.0
11	39.2	3.00	42.2
12	41.1	3.00	44.1

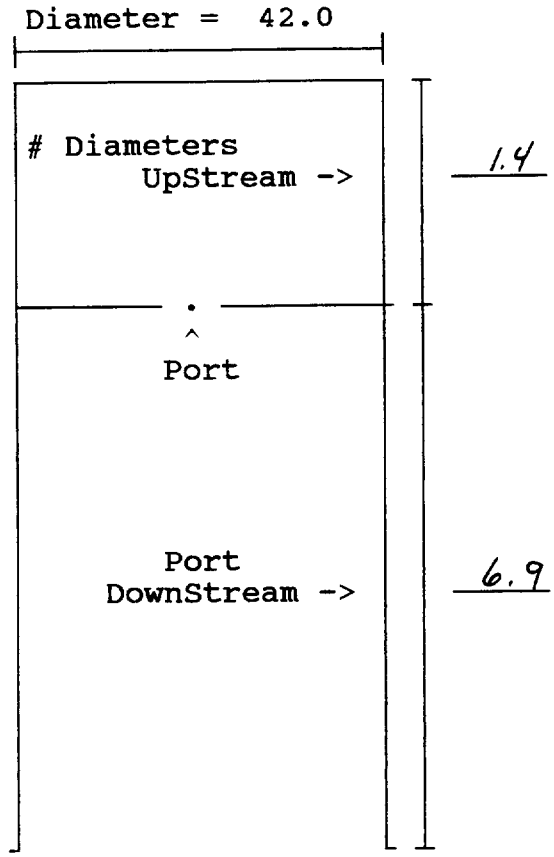

(Not Drawn to Scale)

EPA Method 5

Run No. 1

File Name:"SOA48"

Plant No. 48

Date 05/13/94

Sample Location : STACK OUTLET

Sample Type : 1-5

Operator : (-1 CN) Olive

Ambient Temp. : 42

Baro. Pressure : 30.10

Static Pres, (Ps) : -.62

Filter No. (S) : 685

Pitot Tube No. & Cp. : .84

EPA Representative : Jon Hilly

Probe Length and Type : 4' SS

Nozzle I.D. : .255

Assumed Moisture % _____

Sample Box Number : 1

Meter _____ H @ _____

K Factor 1.82

Pre-Test Leak Check Rate 0 CPM @ 7.5

Post Test Leak Check Rate 0 CPM @ 7.5

Production Rate 132 TPH

Fyrite: O^2 13 CO^2 5

Schematic of Traverse Point Layout
Read and Record all data every 2.5 minutes

Note: dPs=Delta Ps, dH = Delta H

TRAV. Point No.	Elapsed TIME (minutes)	Clock Time 24 hr	GAS Meter Reading	VELOC HEAD dPs in H^20		ORIFICE Prs dH in H^20		STK Temp °F	PROB Temp °F	DRY GAS MTR Inlet Outlet		BOX Temp °F	IMPNGR Temp °F	PUMP VAC. Hg
					√dP	Desir	Act.			Inlet	Outlet			
A-01	0.0- 2.5	8:16	138.143	0.94	0.97	1.71	1.71	181	246	54	49	245	41	4
A-02	2.5- 5.0	8:17	139.700	1.00	1.00	1.82	1.82	182	245	64	49	245	37	4
A-03	5.0- 7.5	8:19	141.500	1.10	1.05	2.00	2.00	183	245	70	50	245	36	4
A-04	7.5-10.0	8:21	143.300	1.30	1.14	2.37	2.37	183	246	75	51	245	36	5
A-05	10.0-12.5	8:24	145.300	1.40	1.18	2.55	2.55	178	246	81	52	246	37	5
A-06	12.5-15.0	8:26	147.400	1.20	1.10	2.18	2.18	179	245	85	54	246	38	5
A-07	15.0-17.5	8:28	149.400	1.20	1.10	2.18	2.18	183	245	87	55	246	36	5
A-08	17.5-20.0	8:32	151.400	1.10	1.05	2.00	2.00	181	246	89	57	246	39	4
A-09	20.0-22.5	8:34	153.200	1.00	1.00	1.82	1.82	173	246	90	59	246	40	4
A-10	22.5-25.0	8:36	155.000	1.10	1.05	2.00	2.00	177	245	91	61	245	39	4
A-11	25.0-27.5	8:39	156.900	0.97	0.98	1.77	1.77	180	245	92	63	245	39	4
A-12	27.5-30.0	8:42	158.700	0.81	0.90	1.47	1.47	178	245	91	64	245	39	3
B-01	30.0-32.5	8:47	160.300	1.30	1.14	2.37	2.37	180	245	82	66	245	39	5
B-02	32.5-35.0	8:49	162.200	1.20	1.10	2.18	2.18	184	245	89	66	245	38	4
B-03	35.0-37.5	8:51	164.100	1.10	1.05	2.00	2.00	180	245	92	67	245	40	4
B-04	37.5-40.0	8:54	166.100	1.50	1.22	2.73	2.73	174	245	93	68	245	41	

File Name:"SOA48"

Run No. 1

Schematic of Traverse Point Layout

Read and Record all data every 2.5 minutes

Note: dPs=Delta Ps, dH = Delta H

TRAV. Point No.	Elapsed TIME (minutes)	Clock Time 24 hr	GAS Meter Reading	VELOC HEAD dPs in H20		ORIFICE Prs dH in H20		STK Temp °F	PROB Temp °F	DRY GAS MTR Inlet Outlet		BOX Temp °F	IMPNGR Temp °F	PUMP VAC. Hg
					√dP	Desir	Act.			Inlet	Outlet			
B-05	40.0-42.5	8:56	168.200	1.40	1.18	2.55	2.55	183	245	96	69	245	42	5
B-06	42.5-45.0	8:59	170.300	1.30	1.14	2.37	2.37	186	245	97	70	245	43	5
B-07	45.0-47.5	9:01	172.400	0.95	0.97	1.73	1.73	178	245	98	71	245	44	4
B-08	47.5-50.0	9:04	174.300	1.30	1.14	2.37	2.37	183	245	97	72	245	43	5
B-09	50.0-52.5	9:06	176.200	1.40	1.18	2.55	2.55	185	245	98	72	245	44	5
B-10	52.5-55.0	9:09	178.300	0.82	0.91	1.49	1.49	180	245	99	73	245	44	3
B-11	55.0-57.5	9:12	180.000	1.30	1.14	2.37	2.37	175	245	97	74	245	45	5
B-12	57.5-60.0	9:14	182.000	1.10	1.05	2.00	2.00	178	245	100	74	245	45	4

Final Gas: 184.026

Vol. Vm Gas Mtr	Ave dp	Ave √P
45.883	1.16	1.07

Ave Act.	Ave Stk
2.11	180
	+460
	640

Ave Inlet	Ave Outlet
88	63
Ave+ 460	
535	

EPA Method 5

Run No. 2

File Name:"SOA48"

Plant No. 48 Date 05/13/94
Sample Location : STACK OUTLET
Sample Type : 1-5
Operator : Green Owe
Ambient Temp. : 55
Baro. Pressure : 30.1
Static Pres, (Ps) : -.62
Filter No. (S) : 55
Pitot Tube No. & Cp. : .84
EPA Representative : Jon Hill

Probe Length and Type : 4' SS
Nozzle I.D. : .235
Assumed Moisture % 18
Sample Box Number : 2
Meter _____ H @ _____
K Factor 3.16
Pre-Test Leak Check Rate .005 CPM @ 7.5
Post Test Leak Check Rate .005 CPM @ 7.0
Production Rate 43 TPH
Fyrite: O^2 13 CO^2 5

Schematic of Traverse Point Layout
Read and Record all data every 2.5 minutes

Note: dPs=Delta Ps, dH = Delta H

TRAV. Point No.	Elapsed TIME (minutes)	Clock Time 24 hr	GAS Meter Reading	VELOC HEAD dPs in H^2O		ORIFICE Prs dH in H^2O		STK Temp °F	PROB Temp °F	DRY GAS MTR Inlet Outlet		BOX Temp °F	IMPNGR Temp °F	PUMP VAC. Hg
					√dP	Desir	Act.			Inlet	Outlet			
A-01	0.0- 2.5	9:40	184.136	0.88	0.94	1.90	1.90	186	243	72	67	241	50	3
A-02	2.5- 5.0	9:43	185.900	1.20	1.10	2.59	2.59	186	245	83	67	245	42	4
A-03	5.0- 7.5	9:45	188.000	1.10	1.05	2.38	2.38	181	245	89	68	245	38	3
A-04	7.5-10.0	9:47	190.100	1.10	1.05	2.38	2.38	179	245	92	68	245	38	3
A-05	10.0-12.5	9:50	192.200	1.10	1.05	2.38	2.38	185	245	95	69	245	38	3
A-06	12.5-15.0	9:52	194.200	1.30	1.14	2.81	2.81	185	245	97	70	245	38	4
A-07	15.0-17.5	9:55	196.400	1.30	1.14	2.81	2.81	180	245	100	71	245	39	4
A-08	17.5-20.0	9:58	198.700	1.10	1.05	2.38	2.38	177	245	101	72	245	40	3
A-09	20.0-22.5	10:00	200.800	1.10	1.05	2.38	2.38	177	245	101	73	245	41	3
A-10	22.5-25.0	10:02	202.900	1.10	1.05	2.38	2.38	181	245	102	74	245	42	3
A-11	25.0-27.5	10:05	205.000	1.00	1.00	2.16	2.16	180	245	103	75	245	43	3
A-12	27.5-30.0	10:07	207.000	1.00	1.00	2.16	2.16	182	245	103	76	245	43	3
B-01	30.0-32.5	10:12	209.000	1.10	1.05	2.38	2.38	182	245	90	77	245	45	3
B-02	32.5-35.0	10:15	211.000	1.20	1.10	2.59	2.59	185	245	99	77	245	43	4
B-03	35.0-37.5	10:17	213.500	1.40	1.18	3.02	3.02	184	245	104	78	245	43	4
B-04	37.5-40.0	10:19	215.500	1.40	1.18	3.02	3.02	186	245	107	79	245	43	4

Run No. 2 File Name:"SOA48"

Schematic of Traverse Point Layout

Read and Record all data every 2.5 minutes

Note: dPs=Delta Ps, dH = Delta H

TRAV. Point No.	Elapsed TIME (minutes)	Clock Time 24 hr	GAS Meter Reading	VELOC HEAD dPs in H^2O		ORIFICE Prs dH in H^2O		STK Temp °F	PROB Temp °F	DRY GAS MTR Inlet Outlet		BOX Temp °F	IMPNGR Temp °F	PUMP VAC. Hg
					√dP	Desir	Act.			Inlet	Outlet			
B-05	40.0-42.5	10:22	217.800	1.30	1.14	2.81	2.81	185	245	108	80	245	43	4
B-06	42.5-45.0	10:25	220.100	1.30	1.14	2.81	2.81	186	245	109	80	245	43	4
B-07	45.0-47.5	10:27	222.400	1.10	1.05	2.38	2.38	186	245	109	81	245	44	4
B-08	47.5-50.0	10:30	224.500	1.10	1.05	2.38	2.38	187	245	108	82	245	44	3
B-09	50.0-52.5	10:32	226.600	1.10	1.05	2.38	2.38	188	245	107	82	245	45	3
B-10	52.5-55.0	10:35	228.700	0.75	0.87	1.62	1.62	188	245	107	82	245	47	2
B-11	55.0-57.5	10:37	230.500	0.82	0.91	1.77	1.77	185	245	105	82	245	47	3
B-12	57.5-60.0	10:40	232.200	1.20	1.10	2.59	2.59	185	245	105	83	245	48	4

Final Gas: 234.428

Vol. Vm Gas Mtr	Ave dp	Ave √P
50.292	1.13	1.06

Ave Act.	Ave Stk
2.44	184
	+460
	644

Ave Inlet	Ave Outlet
100	76
Ave+ 460	
548	

EPA Method 5

Run No. 3

File Name:"SOA48"

Plant No. 48
Date 05/13/94
Sample Location : STACK OUTLET
Sample Type : 1-5
Operator : T.Green K.Olive
Ambient Temp. : 68
Baro. Pressure : 30.1
Static Pres, (Ps) : -.62
Filter No. (S) : 688
Pitot Tube No. & Cp. : .84
EPA Representative : Tom Hilty

Probe Length and Type : 4' SS
Nozzle I.D. : .235
Assumed Moisture % 16
Sample Box Number : 3
Meter _____ H @ _____
K Factor _____
Pre-Test Leak Check Rate 0 CPM @ 25
Post Test Leak Check Rate 0 CPM @ 25
Production Rate 142 TPH
Fyrite: O^2 13 CO^2 5

Schematic of Traverse Point Layout
Read and Record all data every 2.5 minutes

Note: dPs=Delta Ps, dH = Delta H

TRAV. Point No.	Elapsed TIME (minutes)	Clock Time 24 hr	GAS Meter Reading	VELOC HEAD dPs in H^2O		ORIFICE Prs dH in H^2O		STK Temp °F	PROB Temp °F	DRY GAS MTR Inlet	Outlet	BOX Temp °F	IMPNGR Temp °F	PUMP VAC. Hg
					√dP	Desir	Act.			Inlet	Outlet			
A-01	0.0- 2.5	11:09	234.608	0.94	0.97	2.17	2.17	186	245	78	76	245	57	4
A-02	2.5- 5.0	11:12	236.400	0.95	0.97	2.19	2.19	184	245	88	76	245	52	4
A-03	5.0- 7.5	11:14	238.400	1.00	1.00	2.31	2.31	184	245	93	76	245	48	4
A-04	7.5-10.0	11:16	240.400	1.10	1.05	2.54	2.54	185	245	97	76	245	49	5
A-05	10.0-12.5	11:19	242.600	1.10	1.05	2.54	2.54	185	245	100	77	245	50	5
A-06	12.5-15.0	11:21	244.700	1.10	1.05	2.54	2.54	186	245	102	78	245	51	5
A-07	15.0-17.5	11:24	246.800	1.10	1.05	2.54	2.54	188	245	104	78	245	52	5
A-08	17.5-20.0	11:27	249.000	1.20	1.10	2.77	2.77	187	245	106	80	245	54	5
A-09	20.0-22.5	11:29	251.200	1.30	1.14	3.00	3.00	187	245	108	81	245	52	5
A-10	22.5-25.0	11:31	253.500	1.30	1.14	3.00	3.00	187	245	110	82	245	51	5
A-11	25.0-27.5	11:34	255.900	1.40	1.18	3.23	3.23	186	245	111	83	245	52	6
A-12	27.5-30.0	11:36	258.200	1.40	1.18	3.23	3.23	187	245	113	84	245	55	6
B-01	30.0-32.5	11:43	260.700	1.10	1.05	2.54	2.54	185	245	95	85	245	56	5
B-02	32.5-35.0	11:46	262.800	1.30	1.14	3.00	3.00	187	245	104	85	245	54	5
B-03	35.0-37.5	11:48	265.100	1.40	1.18	3.23	3.23	189	245	108	86	245	55	6
B-04	37.5-40.0	11:50	267.500	1.30	1.14	3.00	3.00	189	245	110	86	245	55	6

Run No. 3 File Name:"SOA48"

Schematic of Traverse Point Layout

Read and Record all data every 2.5 minutes

Note: dPs=Delta Ps, dH = Delta H

TRAV. Point No.	Elapsed TIME (minutes)	Clock Time 24 hr	GAS Meter Reading	VELOC HEAD dPs in H^2O		ORIFICE Prs dH in H^2O		STK Temp °F	PROB Temp °F	DRY GAS MTR Inlet Outlet		BOX Temp °F	IMPNGR Temp °F	PUMP VAC. Hg
					√dP	Desir	Act.			Inlet	Outlet			
B-05	40.0-42.5	11:53	269.800	1.20	1.10	2.77	2.77	192	245	112	87	245	56	5
B-06	42.5-45.0	11:56	272.200	1.30	1.14	3.00	3.00	188	245	113	87	245	55	5
B-07	45.0-47.5	11:58	274.400	1.30	1.14	3.00	3.00	182	245	114	88	245	51	5
B-08	47.5-50.0	12:01	276.800	1.20	1.10	2.77	2.77	191	245	114	89	245	51	5
B-09	50.0-52.5	12:03	279.000	1.10	1.05	2.54	2.54	191	245	114	89	245	48	5
B-10	52.5-55.0	12:06	281.200	0.78	0.88	1.80	1.80	183	245	113	90	245	48	4
B-11	55.0-57.5	12:08	283.100	0.89	0.94	2.06	2.06	185	245	111	90	245	52	4
B-12	57.5-60.0	12:08	286.000	0.90	0.95	2.08	2.08	185	245	112	90	245	55	4

Final Gas: 286.996

Vol. Vm Gas Mtr	Ave dp	Ave √P
52.388	1.15	1.07

Ave Act.	Ave Stk
2.66	187
	+460
	647

Ave Inlet	Ave Outlet
105	83
Ave+ 460	
554	

PARTICULATE CALCULATIONS

PLANT #48 LOCATION SPRING VALLEY, OH. DATE 5-13-94

RUN #1 # ml----= 60 X .000003 gm/ml RESIDUE d)_= . .0002

	BEAKER #3B	BEAKER#_____	BEAKER#_____
FINAL-------=	64.4985	0.0000	0.0000
INITIAL-----=	64.4895	0.0000	0.0000
NET-------a)=	.0090	b)= 0.0000	c)= 0.0000
TOTAL(a+b+c)=	.0090	FINAL----=	.6305 FILTER#= 685
RESIDUE---d)=	.0002	INITIAL--=	.6144
NET BACK 1/2=	.0088	FILTER NET	.0161 TOTAL----= .0249

TOTAL*1000---------= 24.9 mg OF PARTICULATE

RUN #2 # ml----= 65 X .000003 gm/ml RESIDUE d)-= .0002

	BEAKER #8B	BEAKER#_____	BEAKER#_____
FINAL-------=	63.9060	0.0000	0.0000
INITIAL-----=	63.8998	0.0000	0.0000
NET-------a)=	.0062	b)= 0.0000	c)= 0.0000
TOTAL(a+b+c)=	.0062	FINAL----=	.6277 FILTER#= 687
RESIDUE---d)=	.0002	INITIAL--=	.6057
NET BACK 1/2=	.0060	FILTER NET	.0220 TOTAL----= .0280

TOTAL*1000---------= 28.0 mg OF PARTICULATE

RUN #3 # ml----= 65 X .000003 gm/ml RESIDUE d)-= .0002

	BEAKER #13A	BEAKER#_____	BEAKER#_____
FINAL-------=	96.6627	0.0000	0.0000
INITIAL-----=	96.6558	0.0000	0.0000
NET-------a)=	.0069	b)= 0.0000	c)= 0.0000
TOTAL(a+b+c)=	.0069	FINAL----=	.6352 FILTER #= 688
RESIDUE---d)=	.0002	INITIAL--=	.6127
NET BACK 1/2=	.0067	FILTER NET	.0225 TOTAL----= .0292

TOTAL*1000---------= 29.2 mg OF PARTICULATE

MOISTURE DETERMINATION

PLANT #48 LOCATION_____SPRING VALLEY

DATE 05-13-94 TECHNICIAN___T. GREEN K.OLIVE

RUN #1

IMPINGER #	1	2	3	4
TYPE	MODIFIED	STANDARD	MODIFIED	MODIFIED
AMOUNT(ml/gms)	150(H20)	150(H20)	0	200(H20)
FINAL WT. (VOL)-	823.3	718.4	518.2	697.9
INITIAL WT (VOL)	674.7	686.9	515.0	688.3
NET WT. (VOL)---	148.6	31.5	3.2	9.6
		TOTAL-------=	192.9	

RUN #2

IMPINGER #	1	2	3	4
TYPE	MODIFIED	STANDARD	MODIFIED	MODIFIED
AMOUNT(ml/gms)	150(H20)	150(H20)	0	200(H20)
FINAL WT. (VOL)-	789.4	748.8	532.3	696.1
INITIAL WT (VOL)	668.4	676.7	529.0	685.1
NET WT. (VOL)---	121.0	72.1	3.3	11.0
		TOTAL-------=	207.4	

RUN #3

IMPINGER #	1	2	3	4
TYPE	MODIFIED	STANDARD	MODIFIED	MODIFIED
AMOUNT(ml/gms)	150(H20)	150(H20)	0	200(H20)
FINAL WT. (VOL)-	802.1	748.2	518.4	709.7
INITIAL WT (VOL)	674.5	688.0	515.0	697.9
NET WT. (VOL)---	127.6	60.2	3.4	11.8
		TOTAL-------=	203.0	

5. TEST SUMMARY

A. Calculations

Particulate, moisture content, gas flow and molecular weight calculations were accomplished using the formulas found on the page following the test results. These formulas appear in Methods Two, Three, Four, and Five, of the Federal Register, Volume 40, Part 60, 7/1/92.

B. Test Results

On the following pages appear the test results for all three runs, and a post test calibration of metering system.

	RUN #1	RUN #2	RUN #3	AVERAGE
DRY GAS METER CALIBRATION FACTOR---Y=	1.01	1.01	1.01	
VOLUME OF GAS METER CONDITIONS----Vm=	45.883	50.292	52.388	
AVE SQ ROOT DELTA P----------p=	1.070	1.060	1.070	
AVE DELTA H PRESS ACROSS ORIFICE--^H=	2.11	2.44	2.66	
AVE STACK TEMPERATURE DEGREES R---Ts	640.00	644.00	647.00	
AVE METER TEMPERATURE DEGREES R---Tm=	535.00	548.00	554.00	
TOTAL WATER COLLECTED----------Vlc=	192.90	207.40	203.00	
TONS PER HOUR PRODUCTION---------tph=	132.00	143.00	142.00	
TOTAL PARTICULATE IN mg----------Pmg=	24.90	28.00	29.20	
PYRITE FOR OXYGEN----------=	13.00	13.00	13.00	13.00
PYRITE FOR CARBON DIOXIDE----------=	5.00	5.00	5.00	5.00
BAROMETRIC PRESSURE----------Pb=	30.10	30.10	30.10	30.10
STACK STATIC PRESSURE (-+)----------=	-.62	-.62	-.62	-.62
ABSOLUTE PRESSURE IN STACK--------Ps=	30.05	30.05	30.05	30.05
SAMPLING TIME IN MINUTES----------O=	60.00	60.00	60.00	
DIAMETER OF NOZZLE----------dn=	.235	.235	.235	
AREA OF STACK (SQ. FEET)----------As=	9.62	9.62	9.62	
1. VOL OF GAS AT STD COND----Vm(std)=	46.23	49.51	51.04	
2. VOL OF WATER STD COND----Vwc(std)=	9.08	9.76	9.56	
3. MOLE FRAC OF WATER VAPOR------Bws=	.1642	.1647	.1577	
4. % MOISTURE----------=	16.42	16.47	15.77	16.22
5. MOLECULAR Wt OF STACK GAS------Ms=	27.46	27.46	27.46	27.46
6. STACK VELOCITY (fps)----------Vs=	67.66	67.25	68.03	67.65
7. VOL FLOW RATE (dscf/hr)-------Qsd=	1.62e+06	1.60e+06	1.63e+06	1.62e+06
8. ACTUAL FLOW RATE (acf/hr)-----Acf=	1.94e+06	1.92e+06	1.93e+06	1.93e+06
9. AREA OF NOZZLE----------A=	3.01e-04	3.01e-04	3.01e-04	
10. % ISOKINETIC----------I=	90.28	97.95	99.44	95.89
11. CONCENTRATION GRAINS/DSCF-------=	8.295e-03	8.709e-03	8.810e-03	8.605e-03
12. POUNDS/DSCF----------=	1.19e-06	1.25e-06	1.26e-06	1.23e-06
13. POUNDS/HOUR EMISSION----------=	1.93	2.00	2.05	1.99
14. POUNDS/TON ASPHALT----------=	1.46e-02	1.40e-02	1.45e-02	1.43e-02

FORMULAS USED IN CALCULATION

Gas Volume Sampled - Standard Cubic Feet = Vm

$$\frac{Y(17.64)(Vm)(Pbar + !H/13.6)}{Tm}$$

Volume of Water Vapor - Standard Cubic Feet = Vwc

(.04707)(Vlc)

Stack Gas Molecular Weight = Ms

Md(1 - Bws) + 18(Bws)

Average Stack Velocity = Vs

85.49(Cp)[(Ts/Ps * Ms)^.5](!P ^.5)

Dry Molecular Weight = Md

.44(CO2) + .32(O2) + .28(100 - (CO2 + O2))

Isokinicity % = I

$$\frac{1.667 * (Ts)(.00267(Vl)}{0 * Vs * Ps * A'} + \frac{(Vm/Tm)(Pbar + (!H/13.6))}{}$$

Stack Gas Volumetric Flow Rate = SCFH(Osd)

3600 * (1 - Bws) * Vs * A * (528/Ts) * (Ps/29.92)

Vlc = Volume of Water Collected
Bws = Water Vapor and in the gas Stream
Vm = Volume of Meter at Meter Conditions
Tm = Temperature of Meter (+460)
Ts = Temperature of Stack (+460)
Ps = Absolute Stack Gas Pressure
A' = Area of Nozzle
A = Area of Stack
O = Time of Test (min)
Pbar = Barometric Pressure
Y = Calibration Factor of Sampling Train
! = Delta
^.5 = Square Root

DATE 5-14-94 PRETESTY= ^H@=	TEST #1	TEST #2	TEST #3
MINIMUM VOL OF GAS ----------	4.000	10.000	10.000
ORIFICE MANOMETER SETTING----------^H	.500	2.000	5.900
WET TEST METER INITIAL READING----Vwi	496.018	500.814	511.671
WET TEST METER FINAL READING------Vwf	500.591	511.121	522.913
WET TEST METER AVERAGE TEMP---------F	70.900	71.500	55.000
DRY TEST METER INITIAL READING----Vdi	287.505	292.549	303.919
DRY TEST METER FINAL READING------Vdf	292.322	303.377	315.132
DRY TEST METER AVERAGE TEMP---------F	81.000	93.800	59.500
TOTAL TEST TIME MINUTES----------O	12.000	14.000	9.000
BAROMETRIC PRESSURE INCHES Hg------Pb	30.100	30.100	30.080
VOLUME OF WET TEST METER----------Vw	4.573	10.307	11.242
VOLUME OF DRY TEST METER----------Vd	4.817	10.828	11.213
AVE WET TEST TEMPERATURE----------Rw	530.900	531.500	515.000
AVE DRY TEST TEMPERTURE----------Rd	541.000	553.800	519.500
(Vw*Pb*Rd)/(Vd*(Pb+^H/13.6)*Rw)-----Y	.966	.987	.997
((.0317*^H)/(Pb*Rd))*((Rw*O)/Vw)^2-^H@	1.889	1.982	2.035
AVERAGE Y FOR 3 TESTS----------	.983	LIMITS= .98-1.02	
AVERAGER ^H@ FOR 3 TESTS----------	1.969	LIMITS= +-0.2 OF AVE ^H	
DIFF BETWEEN AVE=	.080	-.014	-.066

NOTE ^H=DELTA H and Y=GAMMA

W/ CHANGES

OhioEPA
State of Ohio Environmental Protection Agency

P.O. Box 1049, 1800 WaterMark Dr.
Columbus, Ohio 43266-0149
(614) 644-3020
FAX (614) 644-2329

George V. Voinovich
Governor

Donald R. Schregardus
Director

Re: Permit to Install
Greene County
Application No: 08-2825

CERTIFIED MAIL

RECEIVED
MAR 21 1994
REGIONAL AIR POLLUTION
CONTROL AGENCY

March 16, 1994

SOUTHERN OHIO ASPHALT PLANT #48
LARRY E SHIVELY
P O BOX 266
THORNVILLE, OH 43076

Enclosed please find an Ohio EPA Permit to Install which will allow you to install the described source(s) in a manner indicated in the permit. Because this permit contains several conditions and restrictions I urge you to read it carefully.

The Ohio EPA is urging companies to investigate pollution prevention and energy conservation. Not only will this reduce pollution and energy consumption, but it can also save you money. If you would like to learn ways you can save m[illegible] while protecting the environment, please contact our Office of Poll[illegible] 3469.

This permit modification has not been formally issued by OEPA yet, however this copy will suffice.

You are hereby notified that this [illegible] al and may be appealed to the Ohio Envir[illegible] ant to Chapter 3745.04 of the Ohio Revis[illegible] n writing and set forth the action [illegible] upon which the appeal is based. It mu[illegible] ntal Board of Review within thirty (3[illegible] ector's action. A copy of the appeal mus[illegible] the Ohio Environmental Protection Ag[illegible] iling with the Board. An appeal may b[illegible] Board of Review at the following address:

Environmental Board of
236 East Town Street,
Columbus, Ohio 43215

Very truly yours,

Thomas G. Rigo

Thomas G. Rigo, Manager
Field Operations & Permit Section
Division of Air Pollution Control

cc: US EPA
REGIONAL AIR POLLUTION CONTROL

Printed on recycled paper

OhioEPA

State of Ohio Environmental Protection Agency

Permit to Install
Terms and Conditions

Application No. 08-2825
APS Premise No. 0829790411
Permit Fee: $1000.00

Name of Facility: SOUTHERN OHIO ASPHALT PLANT #48

Person to Contact: LARRY E SHIVELY

Address: P O BOX 266
THORNVILLE, OH 43076

Location of proposed source(s): 2225 ROXANA-BURLINGTON RD
SPRING VALLEY, OHIO

Description of proposed source(s):
180 TON/HR ASPHALTIC CONCRETE BATCH PLANT; MODIFICATION.

Date of Issuance: March 16, 1994

Effective Date: March 16, 1994

The above named entity is hereby granted a permit to install for the above described source(s) pursuant to Chapter 3745-31 of the Ohio Administrative Code. Issuance of this permit does not constitute expressed or implied approval or agreement that, if constructed or modified in accordance with the plans included in the application, the above described source(s) of environmental pollutants will operate in compliance with applicable State and Federal laws and regulations, and does not constitute expressed or implied assurance that if constructed or modified in accordance with those plans and specifications, the above described source(s) of pollutants will be granted the necessary permits to operate (air) or NPDES permits as applicable.

This permit is granted subject to the conditions attached hereto.

Ohio Environmental Protection Agency

Donald R Schregardus

Director

TERMINATION OF PERMIT TO INSTALL

Substantial construction for installation must take place within 18 months of the effective date of this permit. This deadline may be extended by up to 12 months if application is made to the Director within a reasonable time before the termination date and the party shows good cause for any such extension.

NOTICE OF INSPECTION

The Director of the Ohio Environmental Protection Agency, or his authorized representatives, may enter upon the premises of the above-named applicant during construction and operation at any reasonable time for the purpose of making inspections, conducting tests, or to examine records or reports pertaining to the construction, modification or installation of the source(s) of environmental pollutants identified within this permit.

CONSTRUCTION OF NEW SOURCES(S)

The proposed source(s) shall be constructed in strict accordance with the plans and application submitted for this permit to the Director of the Ohio Environmental Protection Agency. There may be no deviation from the approved plans without the express, written approval of the Agency. Any deviations from the approved plans or the above conditions may lead to such sanctions and penalties as provided under Ohio law. Approval of these plans does not constitute an assurance that the proposed facilities will operate in compliance with all Ohio laws and regulations. Additional facilities shall be installed upon orders of the Ohio Environmental Protection Agency if the proposed sources are inadequate or cannot meet applicable standards.

If the construction of the proposed source(s) has already begun or has been completed prior to the date the Director of the Environmental Protection Agency approves the permit application and plans, the approval does not constitute expressed or implied assurance that the proposed facility has been constructed in accordance with the approved plans. The action of beginning and/or completing construction prior to obtaining the Director's approval constitutes a violation of Ohio Administrative Code (OAC) Rule 3745-31-02. Furthermore, issuance of the Permit to Install does not constitute an assurance that the proposed source will operate in compliance with all Ohio laws and regulations. Approval of the plans in any case is not to be construed as an approval of the facility as constructed and/or completed. Moreover, issuance of the Permit to Install is not to be construed as a waiver of any rights that the Ohio Environmental Protection Agency (or other persons) may have against the applicant for starting construction prior to

the effective date of the permit. Additional facilities shall be installed upon orders of the Ohio Environmental Protection Agency if the proposed facilities prove to be inadequate or cannot meet applicable standards.

PERMIT TO INSTALL FEE

In accordance with Ohio Revised Code 3745.11, the specified Permit to Install fee must be remitted within 15 days of the effective date of this permit to install.

PUBLIC DISCLOSURE

The facility is hereby notified that this permit, and all agency records concerning the operation of this permitted source, are subject to public disclosure in accordance with OAC Rule 3745-49-03.

APPLICABILITY

This Permit to Install is applicable only to the contaminant sources identified. Separate application must be made to the Director for the installation or modification of any other contaminant sources.

BEST AVAILABLE TECHNOLOGY

As specified in OAC Rule 3745-31-05, all new sources must employ Best Available Technology (BAT). Compliance with the terms and conditions of this permit will fulfill this requirement.

PERMIT TO OPERATE APPLICATION

A Permit to Operate application must be submitted to the appropriate field office for each air contaminant source in this Permit to Install. In accordance with OAC Rule 3745-35-02, the application shall be made at least 90 days prior to start-up of the source.

NINETY DAY OPERATING PERIOD

The facility will be permitted to operate during a 90-day period in accordance with OAC Rule 3745-35-02(C)(4)(b). The purpose of this period of operation is to fulfill the performance tests conditions used in the determination of compliance with the provisions of this Permit to Install or other applicable Ohio EPA rules.

SOURCE OPERATION AFTER COMPLETION OF CONSTRUCTION

This facility is permitted to operate each source described by this permit to install for a period of up to one year from the date the source commenced operation. This permission to operate is granted only if the facility complies with all requirements contained in this permit and all applicable air pollution laws, regulations, and policies.

AIR EMISSION SUMMARY

The air contaminant sources listed below comprise the Permit to Install for SOUTHERN OHIO ASPHALT PLANT #48 located in Greene County. The sources listed below shall not exceed the emission limits/control requirements contained in the table. This condition in no way limits the applicability of any other state or federal regulations. Additionally, this condition does not limit the applicability of additional special terms and conditions of this permit.

Ohio EPA Source Number	Source Identification Description	BAT Determination	Applicable Federal & OAC Rules	Permit Allowable Mass Emissions and/or Control/Usage Requirements
P001	180 tons/hr Asphaltic Concrete Batch Plant **(Modification)	*	3745-31-05 3745-17-07 3745-17-11 3745-17-08 40 CFR Part 60 Subpart I	0.04 gr/dscf, 8.19 lbs/hr, 4.3 tons/yr Particulates; 26.3 lbs/hr, 13.8 tons/yr SO_2; 8.7 lbs/hr, 4.5 tons/yr OC; 6.5 lbs/hr, 3.4 tons/yr NO_x; 7.2 lbs/hr, 3.6 tons/yr CO

*Compliance with the applicable rules and specified allowable emission rates through application of fabric filter control.

**This modification is for an increase in production capacity from 160 tons/hr to 180 tons/hr and on an annual basis from 80,000 tons/yr to 95,000 tons/yr.

SUMMARY
TOTAL PERMIT TO INSTALL ALLOWABLE EMISSIONS

Pollutant	Tons/Year
Particulates	4.3
SO_2	13.8
OC	4.5
NO_x	3.4
CO	3.6

PERFORMANCE TEST REQUIREMENTS

The permittee shall conduct, or have conducted, performance testing on the air contaminant source(s) in accordance with procedures approved by the Agency. Two copies of the written report describing the test procedures followed and the results of such tests shall be submitted and signed by the person responsible for the test. The Director, or an Ohio EPA representative, shall be allowed to witness the test, examine testing equipment, and require the acquisition or submission of data and information necessary to assure that the source operation and testing procedures provide a valid characterization of the emissions from the source and/or the performance of the control equipment.

A. A completed Intent to Test form shall be submitted to the appropriate Ohio EPA District Office or Local Air Pollution Control Agency where the original permit application was filed. This notice shall be made 30 days in advance and shall specify the source operating parameters, the proposed test procedures, and the time, date, place and person(s) conducting such tests.

B. Two copies of the test results shall be submitted within 30 days after the completion of the performance test.

C. Tests shall be performed for the following source(s) and pollutants(s):

Source	Pollutants
P001	PM, ~~SO_2~~

RECORD(S) RETENTION AND AVAILABILITY

All records required by this Permit to Install shall be retained on file for a period of not less than two years unless otherwise indicated by Ohio Environmental Protection Agency. All records shall be made available to the Director, or any representative of the Director, for review during normal business hours.

REPORTING REQUIREMENTS

Unless otherwise specified, reports required by the Permit to Install need only be submitted to Regional Air Pollution Control, 451 West Third Street, Dayton, Ohio 45422.

WASTE DISPOSAL

The owner/operator shall comply with any applicable state and federal requirements governing the storage, treatment, transport and disposal of any waste material generated by the operation of the sources.

MAINTENANCE OF EQUIPMENT

This source and its associated air pollution control system(s) shall be maintained regularly in accordance with good engineering practices and the recommendations of the respective manufacturers in order to minimize air contaminant emissions.

MALFUNCTION/ABATEMENT

In accordance with OAC RULE 3745-15-06, any malfunction of the source(s) or associated air pollution control system(s) shall be reported immediately to the Regional Air Pollution Control, 451 West Third Street, Dayton, Ohio 45422.

Except as provided by OAC Rule 3745-15-06(A)(3), scheduled maintenance of air pollution control equipment that requires the shutdown or bypassing of air pollution control system(s) must be accompanied by the shutdown of the associated air pollution sources.

ADDITIONAL SPECIAL TERMS AND CONDITIONS

1. Equipment/Type of Emissions/Applicable Rules

The specific equipment which comprises this source is listed in the following table along with the applicable rules of the Ohio Administrative Code (OAC):

Equipment	Type of Emissions	Applicable Rules
rotary dryer, hot aggregate elevator, vibrating screens, and weigh hopper	process (stack)	NSPS (40 CFR Part 60, Subpart I, 3745-17-07; 3745-17-11, best available technology (pursuant to OAC rule 3745-31-05) Ref: PTI 08-1351

aggregate storage bins and cold aggregate elevator	fugitive	best available technology 3745-17-08

(This condition in no way limits the applicability of other requirements of the OAC to this source.)

2. Allowable Mass Emission Limits and Control Requirements:

The allowable mass emissions limitation and control requirements for the equipment identified above are specified in the following table:

Equipment	Allowable Mass Emission Limitation and Control Requirements
rotary dryer, hot aggregate elevator vibrating screens, and weigh hopper	Particulate: 0.04 gr/dscf exhaust gases; 4.3 ton/yr visible emissions; source shall not exhibit 20 percent opacity, or greater no visible emissions of fugitive dust from the enclosures for the hot aggregate elevator, vibrating screens, and weigh hopper SO_2: 13.8 tons/yr NO_x: 3.4 tons/yr VOC: 4.5 tons/yr CO: 3.6 tons/yr
aggregate storage bins	the drop height of the front end loader bucket shall be minimized to the extent possible in order to minimize or eliminate visible emissions of fugitive dust from the elevator loading area
cold aggregate elevator	the aggregate loaded into the storage bins shall have a moisture content sufficient to eliminate the visible emissions of fugitive dust from the elevator and the transfer point to the dryer.

3. Inspection/Maintenance

This facility shall continue to perform the steps outlined in the Inspection and Maintenance Program which was submitted to RAPCA on September 28, 1992 for the Alpha Mark II 24 fabric filter.

4. Waste (used) Oils Prohibited

The use of waste oil fuels at this source (P001) is specifically prohibited unless prior authorized is obtained for such sue from Ohio EPA through a permit to install and subsequent permit to operate, required pursuant to OAC rules 3745-31-02 and 3745-35-02, respectively.

5. Annual Production Limit

In order to help monitor compliance with the annual allowable emission requirements, this facility (P001) shall not exceed an annual asphaltic concrete production of 189,000 tons/year.

6. Recycled Asphalt Production

This source has been approved for the use of recycled asphalt products.

7. Reporting and Recordkeeping Requirements

This facility shall maintain daily records of:

a. the asphalt production;
b. the number of operating hours; and
c. the average hourly production.

These records shall be retained on file for a period of not less than two years and shall be made available to the Director of any authorized representative of the Director for review during normal business hours.

The facility shall submit an annual report to the Regional Air Pollution Control Agency which summarizes the information required above. This report shall be submitted by January 15 of each year and shall cover the previous twelve calendar months.

RAPCA STACK TEST OBSERVERS INFORMATION SHEET

		Initials	Date
Routing w/ITT:	Permit Supervisor → Lorez RSB	[illegible]	3/31/94
	Inspection Supervisor	[illegible]	3-31-94
	Back to Emission Test Coordinator		

SCHED. TEST DATE(S): 5-3-94 ALT. TEST DATE(S): _____

STACK OBS.: Jon Hilty ? / Jeff Adams ?

Permit Writer: Lorez Inspector: Cathy cy 3-31-94

Facility: Southern Ohio Asphalt Premises No: _____

SOURCE NO(S).: _____

→ Is this a retest? Yes ____ No ? If Yes, ____ Failed ____ Incomplete

Is the facility to pay for RAPCA's retest time and/or overtime? Yes ___ No ___

If Yes, facility contact person, address and phone no. _____

PRE-TEST SOURCE INSPECTION: _____

(For) _____

Pollutants to be tested: ~~Pb ?~~ PM* (or see Attached)

Test methods: _____ (or see Attached)

OPERATING RATE DURING TEST: permitted @ 180 ton/hr 0.90(180T/hr) = 162T/hr min. per Lorez 3-31-94 [illegible]

ARE (A) SOOT-BLOWING AND/OR (B) ASH-PULLING REQUIRED? (A) ¦ (B) ¦ Both

OPERATING AND/OR CONTROL EQUIPMENT PARAMETERS TO BE MONITORED: _____

PERMIT T'S & C's TO BE MONITORED: _____

PRE-TEST MEETING: Personnel to be present:	Requested by:	Date & Time:	Here	There
Internal:				
With facility				

A pre-test meeting is not needed because nothing unusual is being tested - it's a simple baghouse / particulate test.

* The recently issued PTI indicates that SO_2 needs to be tested for - that was mistakenly included. The PTI is currently being modified to remove the requirement.

RECEIVED

MAR 31 1994

REGIONAL AIR POLLUTION CONTROL AGENCY

Agency Use Only
Date Received
No. Assigned
Premise No.

INTENT TO TEST NOTIFICATION

Proposed Test Date 5-3-94
Pre-Test Meeting Desired? Yes / / No /✓/

Tex Green

A. Facility Information

Name Southern Ohio Asphalt

Address 2225 Roxana-Burlington Rd, Spring Valley

Contact Person LARRY E. SHIVELY

Telephone Number 614-246-6315

B. Testing Firm Information

Name THE SHELLY COMPANY

Address P. O. Box 266, Thornville, Ohio 43076

Contact Person LARRY E. SHIVELY

Telephone Number 614 246-6315

C. Source Sampling Information: Identify all sources and pollutants to be sampled.

Source	Control Equipment	Monitoring Equipment	Pollutant to be Tested	EPA Test Method	Filter Box Temperature	Number of Sampling Points	Total Time for Test Run	Number of Sampling Runs
Plant # 48	Baghouse	N/A	Particulate	1-5	245	24	60	3

Any modifications to USEPA Reference Method(s)? Yes / / No /✓/ ; If yes explain

Sampling Location(s): Inlet / / Outlet /✓/ Simultaneous / /

Will cyclonic flow check(s) be conducted? Yes /✓/ No / /

Fuel Sampling: Coal - Proximate / / Ultimate / / Other (specify)

Emission Rate to be calculated using: F-Factor / / Ultimate Coal Analysis / / Other (specify)

Are concurrent Method 9 readings to be performed? Yes / / No /✓/

D. Sample Train Calibration: All affected measuring and metering equipment should be calibrated within 60 days of the scheduled testing.

UNIVERSAL STACK SAMPLER

THE HAS BEEN ADDED TO ANDERSEN'S ALREADY BROAD LINE OF STACK SAMPLING EQUIPMENT TO OFFER THE LATEST IN STATE-OF-THE-ART TECHNOLOGY. THE CONTROL UNIT INCLUDES CIRCUIT BREAKER SELECTOR SWITCHES AND A DIGITAL TEMPERATURE READ-OUT SYSTEM TO SOLVE THE COMMON PROBLEMS OF BLOWN FUSES AND DIFFICULT TO SEE DIAL THERMOMETERS ASSOCIATED WITH OTHER STACK SAMPLING SYSTEMS. THE IS AVAILABLE AS A COMPLETE SYSTEM, OR COMPONENTS CAN BE PURCHASED INDIVIDUALLY TO UPDATE COMPETITIVE UNITS NOW IN THE FIELD.

FEATURES:

- —Digital Temperature Read-Out for Type K Thermocouples
- —Lighter Weight Fiberglass Control Unit
- —Modular Pitot Tube Tip
- —Circuit Breaker Selector Switches
- —High Capacity Rotary-Vane Vacuum Pump
- —0-10″ Double-Column Inclined-Vertical Manometer
- —Communications System Available

THE LATEST TECHNOLOGY .....

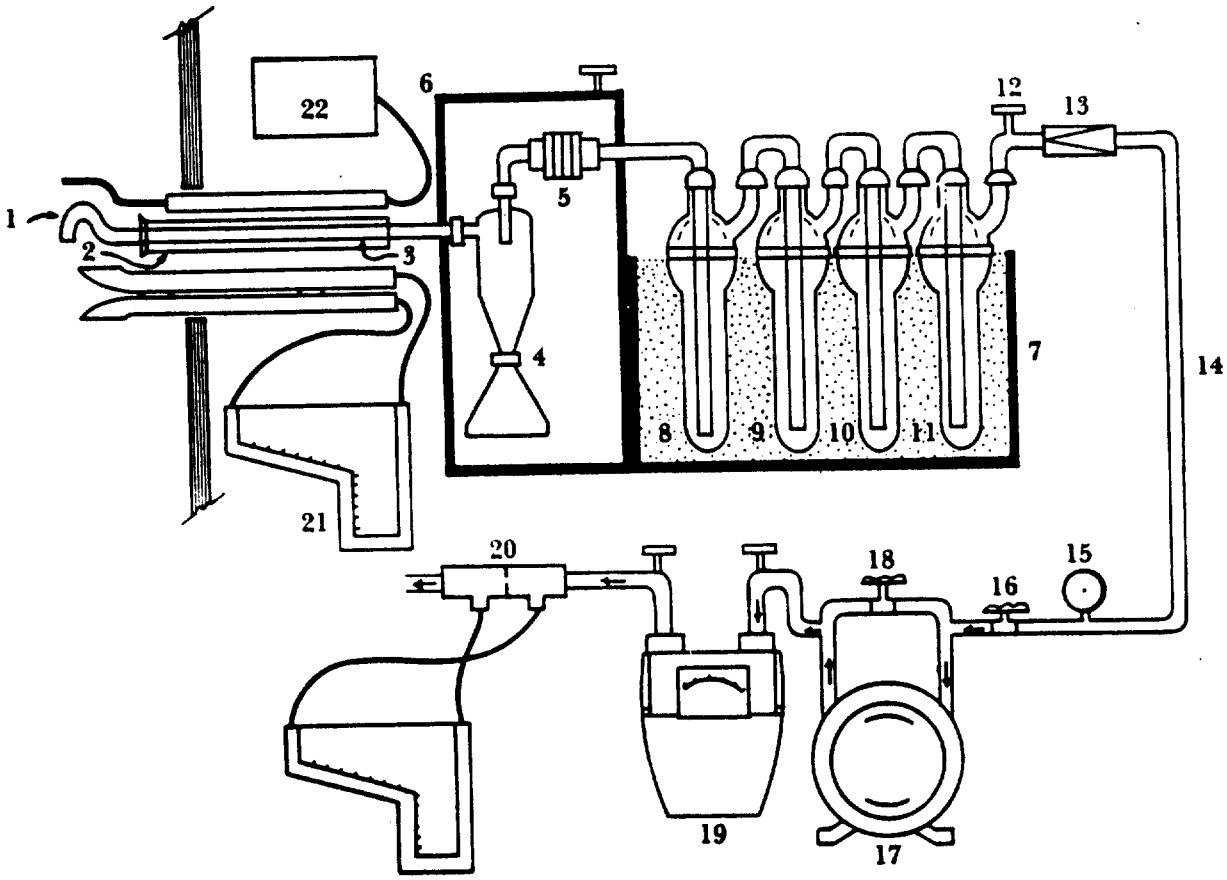

Figure 3-1. EPA Method 5 particulate sampling train

1. Sampling nozzle
2. Sampling probe sheath
3. Heated sample probe liner
4. Cyclone assembly (proposed regulations do not require this cyclone)
5. Out of stack filter assembly
6. Heated filter compartment maintained 120 °C ± 14 °C (248 °F ± 25 °F) (or temperature specified in 40CFR subpart)
7. Impinger case
8. First impinger filled with H_2O (100 ml)
9. Greenburg-Smith (or modified Greenburg-Smith) impinger filled with H_2O (100 ml)
10. Third impinger – dry
11. Fourth impinger – filled with H_2O absorption media (200-300 gm)
12. Impinger exit gas thermometer
13. Check valve to prevent back pressure
14. Umbilical cord – vacuum line
15. Pressure gage
16. Coarse adjustment valve
17. Leak free pump
18. By-pass valve
19. Dry gas meter with inlet and outlet dry gas meter thermometer
20. Orifice meter with manometer
21. Type S pitot tube with manometer
22. Stack temperature sensor

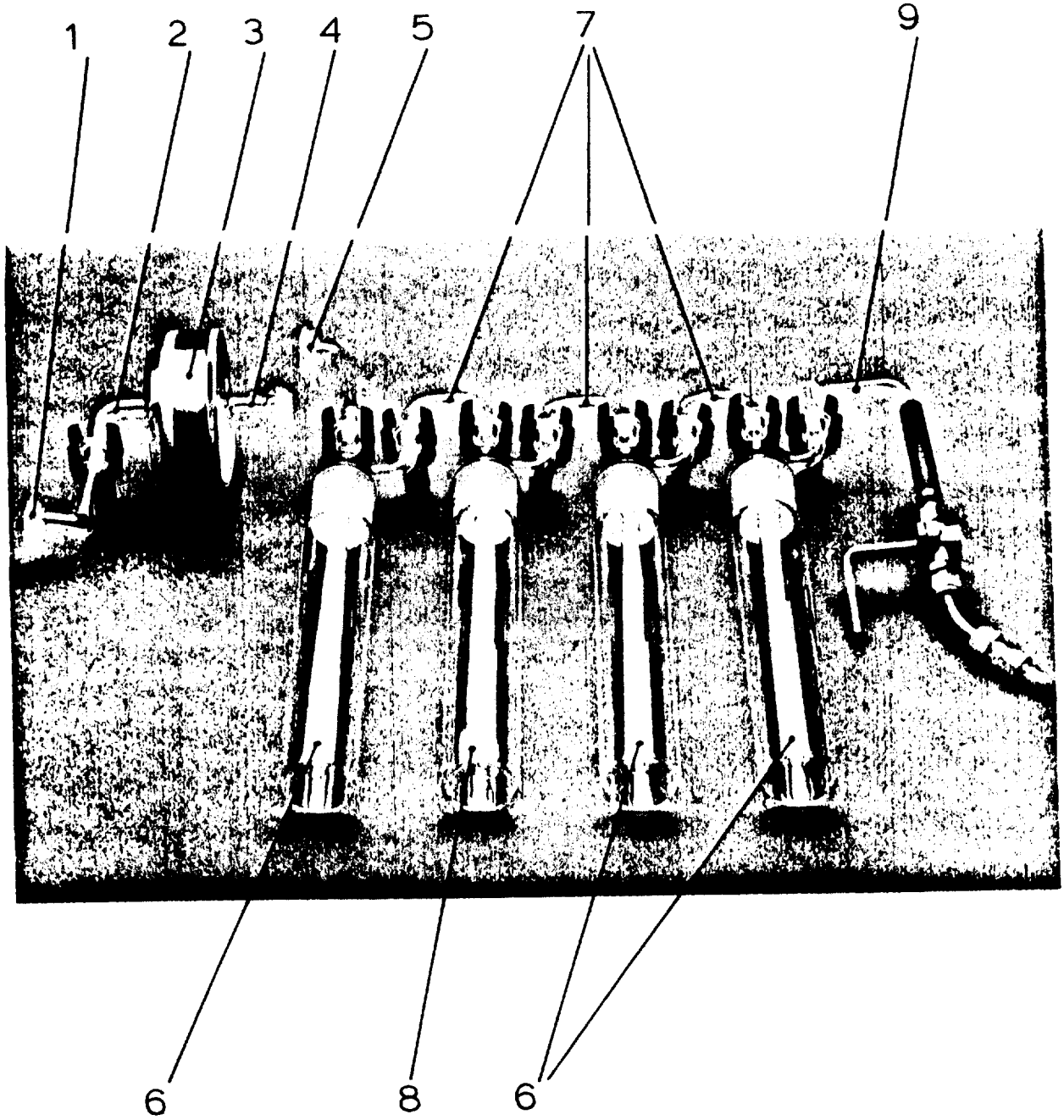

FIGURE 3-6: GLASSWARE

1 - Cyclone By-Pass
2 - Filter Inlet
3 - Filter Clamp
4 - Filter Outlet
5 - Impinger Inlet
6 - Modified Bubbler
7 - U-Tube
8 - Standard Impinger
9 - Impinger Outlet

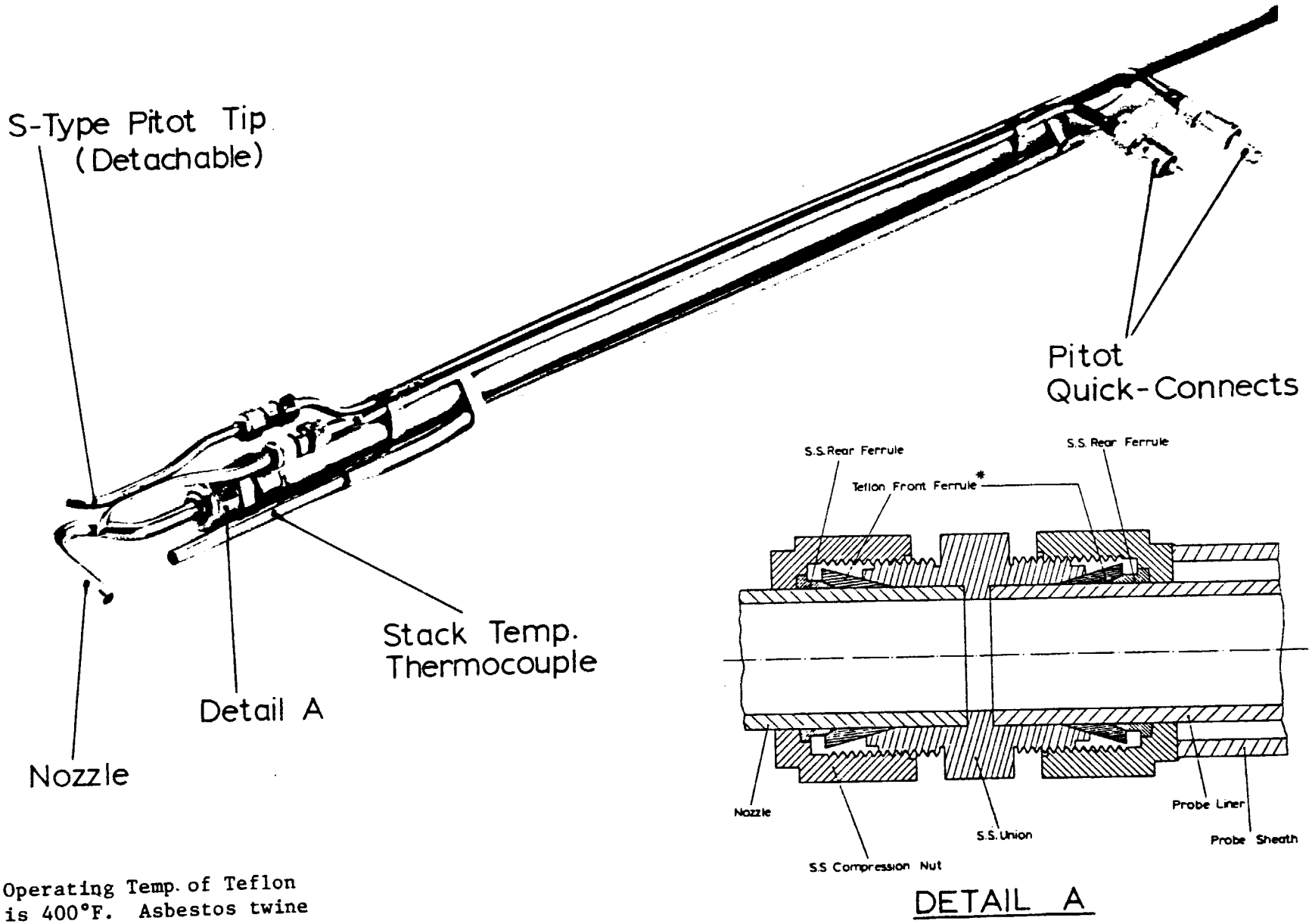

* Maximum Operating Temp. of Teflon Ferrule is 400°F. Asbestos twine should be used for applications above 400°F.

FIGURE 3-7: PROBE ASSEMBLY

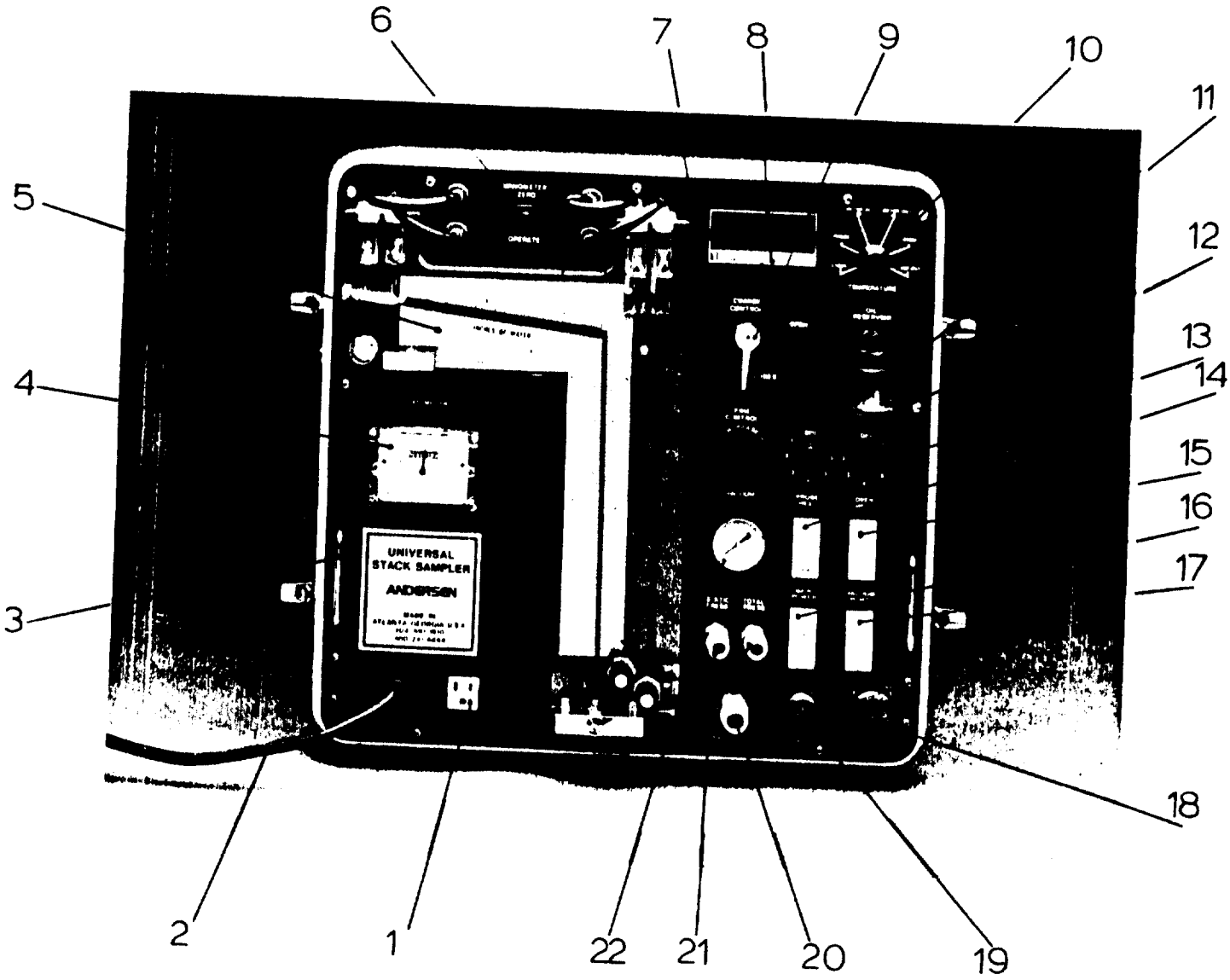

FIGURE 4-1: CONTROL UNIT

1 - Auxiliary A.C. Receptacle
2 - A.C. Power Line
3 - Pull-Drawer Handle
4 - Dry Gas Meter Index
5 - Dual Column Inclined Manometer
6 - Manometer-Zero Switch
7 - Fine-Control Flow Valve
8 - (LED) Digital Temperature Display
9 - Coarse-Control Flow Valve
10 - Temperature Monitor Switch (6 Position)
11 - Vacuum Pump Lubricator
12 - Probe Heat Controller
13 - Oven Heat Controller
14 - Probe Heat Switch
15 - Oven Heat Switch
16 - Main Power Switch
17 - Vacuum Pump Switch
18 - Thermocouple Amphenol Connector
19 - Power Amphenol Connector
20 - Sample Line Quick-Connect
21 - Pitot Lines Quick-Connect
22 - System Vacuum Gauge

1. The sampling train will be like that described in Figure 3-1. The control box is a Universal Sampler Model 90-900.
2. Filters will be glass Whatman No. 934-AH
3. The probe will be stainless steel.
4. Probe cleaning solvent will be reagent grade Acetone.

The following methods of sampling will be employed in the test program:

Testing will be conducted to determine the following:

A. Gas Volume - ACFM and SCFM
B. Gas Temperature - F
C. Moisture - % by volume
D. Flue Gas Molecular Weight - % by volume O_2, CO_2 and (N_2 & CO) by difference.
E. Stack Gas Velocity - feet per second
F. Particulate Emissions - grains/DSCF, lbs./hr.

METHODS OF TESTS:

A. Sampling and traverse locations were determined as per Method One of the Federal Register, Volume 40, Part 60, App. A 7-1-89.

B. Gas Flow, gas temperature, and static pressure measurements were made as per Method Two of the Federal Register, Volume 40, Part 60, 7-1-89.

C. Excess air and molecular weight determinations were made as per Method Three of the Federal Register, Volume 40, Part 60, 7-1-89.

D. Moisture content sampling was conducted as per Method Four of the Federal Register, Volume 40, Part 60, 7-1-89.

E. Particulate sampling was conducted as per Method Five of the Federal Register, Volume 40, Part 60, 7-1-89.

ANALYTICAL METHODS

All samples generated during the test program were analyzed by The Shelly Company at The Shelly Company Laboratory in Thornville, Ohio.

EQUIPMENT CALIBRATION

All flow measurement equipment was inspected and a calibration factor of .84 was assumed as per instructions in Method 2 of the Federal Register, Volume 40, Part 60, 7-1-89.

B. Nozzle Diameter

Probe nozzles were field calibrated with NBS traceable micrometers as per instructions in Method 5 of the Federal

Register, Volume 40, Part 60, 7-1-89.

C. Metering System

The metering system was calibrated before field use and a post-test calibration was performed after the test program in accordance with Method 5 of the Federal Register, Volume 40, Part 60, 7-1-89.

EQUATION 1 - DRY GAS METER VOLUME SAMPLED

$$V_m = V_f - V_i$$

WHERE:

V_m = Volume of gas sample measured by the dry gas meter, cubic feet

V_f = Final reading of dry gas meter, cubic feet

V_i = Initial reading of dry gas meter, cubic feet

EQUATION 2 - DRY GAS VOLUME CORRECTED TO STANDARD CONDITIONS

$$V_{m_{std}} = 17.64\ \gamma\ V_m \left(\frac{P_{bar} + \frac{\Delta H}{13.6}}{T_m} \right)$$

For English units (68°F, 29.92" Hg)

WHERE:

$V_{m_{std}}$ = Volume of gas sample measured by the dry gas meter (standard conditions), dscf

V_m = Volume of gas sample as measured by the dry gas meter, dcf

Y = Dry gas meter calibration factor

T_{std} = Standard absolute temperature, 528°R

T_m = Absolute average dry gas meter temperature, °R

P_{bar} = Barometric pressure at the sampling site, "Hg

ΔH = Average pressure differential across the orifice meter, "H_2O

P_{std} = Standard absolute pressure, 29.92 "Hg

EQUATION 3 - VOLUME OF WATER VAPOR CONVERTED TO STANDARD CONDITIONS

$$V_{w_{std}} = 0.04707\, V_{lc}$$

WHERE:

$V_{w_{std}}$ = Volume of water vapor in the gas sample corrected to standard conditions, scf

V_{lc} = Total volume of liquid collected in impingers and silica gel, ml.

EQUATION 4 - PERCENT MOISTURE BY VOLUME

$$P_{mos} = \frac{V_{wc}}{V_{wc} + V_{mc}} \times 100$$

WHERE:

P_{mos} = Percent moisture by volume

V_{wc} = Volume of water vapor collected, corrected to standard conditions (scf)

V_{mc} = Dry gas volume, measured by the dry gas meter, corrected to standard conditions, (dscf)

EQUATION 5 - MOLE FRACTION OF DRY GAS

$$M_d = \frac{100-P_{mos}}{100}$$

WHERE:

M_d = Mole fraction of dry gas

EQUATION 6 - PERCENT NITROGEN

$$P_{N_2} = 100 - (P_{CO_2} + P_{CO} + P_{O_2})$$

WHERE:

P_{N_2} = Percent Nitrogen by volume, dry

P_{CO_2} = Percent Carbon Dioxide by volume, dry

P_{O_2} = Percent Oxygen by volume, dry

P_{CO} = Percent Carbon Monoxide by volume, dry

EQUATION 7 - MOLECULAR WEIGHT OF GAS (DRY)

$$M_{wd} = 0.44\, P_{CO_2} + 0.32\, P_{O_2} + 0.28\, (P_{N_2} + P_{CO})$$

WHERE:

M_{wd} = Molecular weight of stack gas, dry

EQUATION 8 - MOLECULAR WEIGHT OF STACK GAS

$$M_s = (M_{wd})(M_d) + 18\,(1-M_d)$$

WHERE:

M_d = Mole fraction of dry gas

M_s = Molecular weight of stack gas

M_{wd} = Molecular weight of stack gas, dry

EQUATION 9 - AVERAGE STACK GAS VELOCITY

$$V_s = K_p C_p \left(\sqrt{\Delta P}\right)_{avg} \sqrt{\frac{T_{s(avg)}}{P_s M_s}}$$

WHERE:

V_s = Stack gas velocity, feet per second

$K_p = 85.49 \frac{ft}{sec} \left[\frac{(lb/lb\text{-}mole)("Hg)}{(^oR)("H_2O)}\right]^{1/2}$

C_p = Pitot tube coefficient, dimensionless

T_s = Absolute stack gas temperature, ^oR

ΔP = Velocity pressure of stack gas, inches H_2O

M_s = Molecular weight of stack gas, $\frac{lb}{lb\text{-}mole}$

P_s = Stack gas pressure (absolute), "Hg (not corrected to sea level)

EQUATION 10 - STACK OR DUCT AREA

A. ROUND

$$A = \Pi \left(\frac{D}{2}\right)^2$$

WHERE:

A = Area of stack or duct, square feet

Π = Constant, 3.1416

D = Inside diameter of stack or duct, feet

B. RECTANGULAR

$$A = LW$$

WHERE:

A = Area of stack or duct, square feet

L = Inside length of stack or duct, feet

W = Inside width of stack or duct, feet

EQUATION 11 - STACK OR DUCT FLOW RATE

$$Q_s = \frac{(0.293)\, V_s A_s M_d P_s}{T_s}$$

WHERE:

Q_s = Stack or duct flow rate, dry, standard conditions, (dscfm)

V_s = Average Stack gas velocity, feet per second

M_d = Mole fraction of dry gas

P_s = Stack gas pressure (absolute), "Hg (not corrected to sea level)

T_s = Stack gas temperature, ^oR

EQUATION 12 - PERCENT ISOKINETIC

$$I = \frac{1.667\, T_s \left[(0.00267\, V_{lc}) + V_m\left(\frac{P_{bar} + \frac{\Delta H}{13.6}}{T_m}\right)\right]}{\theta\, V_s\, P_s\, A_N}$$

WHERE:

I = Percent of isokinetic sampling, %

V_{lc} = Total volume of liquid collected in impingers and silica gel, ml

V_m = Volume of gas sample through the dry gas meter (meter conditions), ft^3

T_m = Average dry gas meter temperature, ^oR

P_{bar} = Barometric pressure at sampling site, "Hg

ΔH = Average pressure drop across orifice, "H_2O

T_s = Average stack gas temperature, ^oR

θ = Total sampling time, min

V_s = Stack gas velocity, feet/sec

P_s = Stack gas pressure (absolute), "Hg

A_N = Cross-sectional area of nozzle, ft^2

EQUATION 13 - PARTICULATE LOADING AT STANDARD CONDITIONS

$$C'_s = 0.0154 \frac{M_n}{V_{m_{std}}}$$

WHERE:

C'_s = Concentration of particulate matter in stack gas, gr/dscf

M_n = Total amount of particulate matter collected, mg

$V_{m_{std}}$ = Volume of gas sample measured by the dry gas meter (standard conditions), dscf

EPA Method 5

Run No. ____ File Name:"XYZ"

Plant No. _____ Date 04/22/93
Sample Location : _____
Sample Type : METHOD 1-5
Operator : _____
Ambient Temp. : _____
Baro. Pressure : _____
Static Pres, (Ps) : _____
Filter No. (S) : _____
Pitot Tube No. & Cp. : .84
EPA Representative : _____

Probe Length and Type : _____
Nozzle I.D. : _____
Assumed Moisture % _____
Sample Box Number : 1
Meter _____ H @ _____
K Factor _____
Pre-Test Leak Check Rate _____ CPM @ _____
Post Test Leak Check Rate _____ CPM @ _____
Production Rate _____ TPH
Fyrite: O^2 _____ CO^2 _____

Schematic of Traverse Point Layout
Read and Record all data every 2.5 minutes

Note: dPs=Delta Ps, dH = Delta H

TRAV. Point No.	Elapsed TIME (minutes)	Clock Time 24 hr	GAS Meter Reading	VELOC HEAD dPs in H^2O		ORIFICE Prs dH in H^2O		STK Temp °F	PROB Temp °F	DRY GAS MTR Inlet Outlet		BOX Temp °F	IMPNGR Temp °F	PUMP VAC. Hg
					√dP	Desir	Act.			Inlet	Outlet			
A-01	0.0- 2.5	9:43	0.000	0.00	0.00	0.00	0.00		0			0	0	
A-02	2.5- 5.0	9:43	0.000	0.00	0.00	0.00	0.00		0			0	0	
A-03	5.0- 7.5	9:43	0.000	0.00	0.00	0.00	0.00		0			0	0	
B-01	7.5-10.0	9:43	0.000	0.00	0.00	0.00	0.00		0			0	0	
B-02	10.0-12.5	9:43	0.000	0.00	0.00	0.00	0.00		0			0	0	
B-03	12.5-15.0	9:43	0.000	0.00	0.00	0.00	0.00		0			0	0	
C-01	15.0-17.5	9:43	0.000	0.00	0.00	0.00	0.00		0			0	0	
C-02	17.5-20.0	9:43	0.000	0.00	0.00	0.00	0.00		0			0	0	
C-03	20.0-22.5	9:43	0.000	0.00	0.00	0.00	0.00		0			0	0	
	Final Gas:		0.000											

Vol. Vm Gas Mtr	Ave dp	Ave √P
0.000	0.00	0.00

Ave Act.	Ave Stk
0.00	0
	+460
	460

Ave Inlet	Ave Outlet
0	0
	Ave+ 460
	460

PARTICULATE CALCULATIONS

PLANT #_____ LOCATION_____ DATE_____

RUN #_____ #ml_____ X _____ gm/ml=_____(d) residue

	BEAKER #_____	BEAKER #_____	BEAKER #_____
FINAL	_____	_____	_____
INITIAL	_____	_____	_____
NET	a)_____	b)_____	c)_____

TOTAL(a+b+c)_____ FINAL _____ FILTER #_____

RESIDUE (d)_____ INITIAL _____

NET BACK 1/2_____ + FILTER NET _____ = _____ TOTAL

TOTAL*1000=_____ mg of PARTICULATE

RUN #_____ #ml_____ X _____ gm/ml=_____(d) residue

	BEAKER #_____	BEAKER #_____	BEAKER #_____
FINAL	_____	_____	_____
INITIAL	_____	_____	_____
NET	a)_____	b)_____	c)_____

TOTAL(a+b+c)_____ FINAL _____ FILTER #_____

RESIDUE (d)_____ INITIAL _____

NET BACK 1/2_____ + FILTER NET _____ = _____ TOTAL

TOTAL*1000=_____ mg of PARTICULATE

RUN #_____ #ml_____ X _____ gm/ml=_____(d) residue

	BEAKER #_____	BEAKER #_____	BEAKER #_____
FINAL	_____	_____	_____
INITIAL	_____	_____	_____
NET	a)_____	b)_____	c)_____

TOTAL(a+b+c)_____ FINAL _____ FILTER #_____

RESIDUE (d)_____ INITIAL _____

NET BACK 1/2_____ + FILTER NET _____ = _____ TOTAL

TOTAL*1000= mg of PARTICULATE