RAMCON

ENVIRONMENTAL CORPORATION

Note: This is a reference cited in *AP 42, Compilation of Air Pollutant Emission Factors, Volume I Stationary Point and Area Sources.* AP42 is located on the EPA web site at www.epa.gov/ttn/chief/ap42/

The file name refers to the reference number, the AP42 chapter and section. The file name "ref02_c01s02.pdf" would mean the reference is from AP42 chapter 1 section 2. The reference may be from a previous version of the section and no longer cited. The primary source should always be checked.

RAMCON BUILDING, 223 SCOTT STREET, MEMPHIS, TENNESSEE 38112

TELEPHONE 800/458-4567 IN TENNESSEE 901/458-7000 FAX 901-458-3868

DIVISION OF ENVIRONMENTAL MANAGEMENT

Air Quality Section

April 9, 1990

M E M O R A N D U M

To: Ken Smack/Gene Towe

From: Shannon M. Vogel

Subject: Lee Paving Company
Aberdeen, Moore County, North Carolina
Particulate Emissions Testing of a
Rotary drum mix asphalt plant
Performed on September 28, 1989 by
Ramcon Environmental Corporation

A report of the subject testing has been reviewed and is found to be acceptable. The results appear reliable and demonstrate that compliance with the applicable emissions standards was being achieved during the test period.

The emission standard that applies to the subject facility is 40 CFR 60, Subpart I, STANDARDS OF PERFORMANCE FOR HOT MIX ASPHALT FACILITIES. Subpart I limits particulate emissions to 0.04 grains per dry standard cubic foot.

The maximum permitted capacity stated in permit No. 2225R4 is 250 tons per hour. Due to unusually wet aggregate the plant was operating at a capacity of only 130.5 ton per hour during the test period. The percent moisture in the sample gas (ranging from 27 and 32 percent) confirms that a great deal of moisture was being removed from the aggregate. The average emission concentration demonstrated by the test results was 0.0212 grains per dry standard cubic foot.

Compliance was demonstrated.

cc: Central File by way of Earl McCune
Mike Aldridge

moisture @ saturation

AQ-16 Revised 3/1/84

NORTH CAROLINA DIVISION OF ENVIRONMENTAL MANAGEMENT

Air Quality Action Request

Computer ___

Name	Location	Reg/Co./Prem. No
LEE PAVING CO.	Aberdeen (Moore)	6/63/00025

Contact: Boyd Herring — Telephone:

Type Action: CI ___ EE ___ SR ___ PC ___ VE ___ PI ___ Other ___

Air Program Status 03 93 ___ ___ ___ Class A1A Chg ___

Action Requested By: EMC — Address/Phone — Rec'd Date

Last Insp. Date 6-27-89 Action Date 9-28-89 Next Insp. Date 4-1-90

Permit # 2225R4 Issued 3-15-89 Expires 7-1-90 Stip. # ___ Met Y/N ___

Recommendations: Await results of test review

Signature: Gene Towe — Date: 10-11-8

Dist: Yellow (Central File) x - Blue (Region) x - White (Opt.) x Specify Mike Aldridge

1. On 9-28-89 Lee Paving Co. conducted a performance for particulates on a new 250 TPH rotary drum asphalt plant as required by Permit No. 2225R4. The plant is controlled by a baghouse with 8008 square feet of filter area. This is an NSPS source and the allowable particulate emission rate is .04 gr/dscf. The testing firm was Ramcon Environmental Corporation. The test engineer was Ken Almendinger, and his assistant was Murphy O'Neil. The following parameters were obtained:

   a. Duct size (rectangular) ---------- 27.5" x 40.5"
   b. Distance before ports ---------- 250"
   c. Distance after ports ---------- 24"
   d. Number of test points ---------- 30
   e. Number of runs ---------- 3
   f. Time per run ---------- 60 minutes
   g. Leak test after each run --------- less than .02 cfm
   h. Process rate during test --------- 130.5 TPH (average)
   i. Maximum process rate ---------- 250 TPH

RECEIVED
OCT 12 1989
AIR QUALITY TECH SERVICES

2. As you can see, the process rate during the test was considerably lower than the design rate The reason for this is the recent heavy storms and rain has resulted in a high moisture content in the material.

		Moisture Content	Calc. Actual Moisture Content
Sand	=	6 %	1.2 %
Screenings	=	6 %	2.16 %
Stone	=	3 %	1.32 %
TOTAL (actual)	=		4.68 %

3. The excess moisture was causing the baghouse to clog-up. When this reaches a critical point the plant will automatically shut down and a three hour cleaning process will have to be performed. An attempt was made during the test to run the plant at 160 TPH and the magnehelic gauge showed a pressure increase of about 18 inches of water. Therefore, the plar had to be turned back to about 120-130 TPH.

   At this time the manufacturer was called to obtain directions on how to increae the pulse time on the baghouse. The present pulse time was about every 20 seconds. The manufacturer suggested every 10 seconds. After the adjustment was made another attempt was made to increase the production rate and again the baghouse pressure began to increase.

4. The following is a list of the average production rate during the three test runs.

TIME	PRODUCTION RATE
9:30	129.56
9:45	148.32
10:00	166.00
10:30	148.30
10:45	145.27
11:00	109.21
11:15	110.33
11:30	126.90
11:45	126.88
12:00	145.87
12:15	144.68
12.30	105.77
12:45	111.08
1:45	108.85

TOTAL = 1827.02/14 = 130.5 TPH Average Production Rate

5. I observed 0% opacity during the entire test.

6. Overall, the performance appeared to be conducted in a proper manner.

LEE PAVING COMPANY
ABERDEEN, MOORE COUNTY, NORTH CAROLINA
ROTARY DRUM MIX ASPHALT PLANT
SEPTEMBER 28, 1989

	RUN NUMBER	1	2	3
	RUN DATE	9/28/89	9/28/89	9/28/89
	RUN START TIME			
	RUN FINISH TIME			
N	NUMBER OF SAMPLE POINTS	30	30	30
Theta	TEST RUN TIME, MINUTES	60	60	60
Dn	NOZZLE DIAMETER, INCHES	0.300	0.300	0.300
An	NOZZLE AREA, SQ. IN.	0.0707	0.0707	0.0707
Cp	PITOT TUBE COEFFICIENT	0.840	0.840	0.840
Y	GAS METER CAL. FACTOR	1.011	1.011	1.011
Pbar	BAROMETRIC PRESSURE, IN. HG	30.16	30.16	30.16
Delta H	AVG. PRESS. DIFFERENTIAL OF ORIFICE METER, IN. H2O	1.817	1.767	1.481
Vm	ACTUAL METERED GAS VOL. CF	45.360	44.754	46.203
TmF	GAS METER TEMP, DEG. F	79	88	93
Vm(std)	METERED GAS VOLUME AT DRY STANDARD CONDITIONS, DSCF	45.466	44.116	45.102
Vwc	VOLUME OF WATER COLLECTED IN IMPINGERS & DESICCANT, ML	456.0	366.0	348.0
Vwc(std)	VOLUME OF WATER VAPOR, SCF	21.464	17.228	16.380
%M	MOISTURE, % BY VOLUME @ Saturation	32.1	28.1	26.6
fm	MOLE FRACTION OF DRY GAS	0.679	0.719	0.734
%CO2	CO2, % BY VOLUME, DRY	5.3	5.3	4.2
%O2	O2, % BY VOLUME, DRY	9.7	8.5	12.3
%CO	CO, % BY VOLUME, DRY			
%N2	N2, % BY VOLUME, DRY	85.0	86.2	83.5
Md	DRY MOLECULAR WT., #/#-MOLE	29.24	29.19	29.16

LEE PAVING COMPANY
ABERDEEN, MOORE COUNTY, NORTH CAROLINA
ROTARY DRUM MIX ASPHALT PLANT
SEPTEMBER 26, 1989

	RUN NUMBER	1	2	3
Ms	WET MOLECULAR WT., #/#-MOLE	25.63	26.05	26.19
Pstatic	GAS STATIC PRESS,. IN. H2O	0.01	0.01	0.01
Ps	ABSOLUTE GAS PRESS, IN. HG.	30.16	30.16	30.16
TsF	STACK GAS TEMP., DEG. F	241	233	229
SSR DP	SUM OF SQUARE ROOTS OF VELOCITY PRESS. VALUES	23.7160	23.2270	23.3126
Vs	FLUE GAS VELOCITY, FT/SEC	54.1	52.2	52.1
Ds	DUCT DIAMETER, INCHES			
As	DUCT AREA, SQUARE INCHES	1113.8	1113.8	1113.8
AsF	DUCT AREA, SQUARE FEET	7.734	7.734	7.734
Qs	GAS FLOW RATE, WET ACFM	25085	24231	24183
Qstd	GAS FLOW RATE, DRY SCFM	12933	13378	13699
mn	SAMPLE WEIGHT, GRAMS	0.0501	0.0477	0.0876
cs	PART. CONCENTRATION GR/DSCF	0.0170	0.0167	0.0300
pmrc	POLLUTANT MASS RATE CALC. FROM CONCENTRATION, #/HR	1.89	1.91	3.52 √
pmra	POLLUTANT MASS RATE CALC. FROM AREA RATIO, #/HR	1.74	1.66	3.04
%I	% ISOKINETIC	92.3	86.6	86.5
pmr avg	AVERAGE OF pmra & pmrc	1.81	1.79	3.28
%EA	% EXCESS AIR	76.1	59.6	126.2
F	"F" FACTOR, CU FT/MIL BTU			
			2	ERR

129.56	930
148.32	945
106	1000
148.3	1030
145.27	1045
109.21	1100
110.33	1115
126.9	1130
125.88	1145
145.87	1200
144.68	1215
105.77	1230
111.08	1245
108.85	1315
1827.02	
130.5014	

Process rate

RAMCON

ENVIRONMENTAL CORPORATION

RECEIVED
OCT 2? 1989
ENV. MANAGEMENT
FAYETTEVILLE REG. OFFICE

SOURCE SAMPLING
for
PARTICULATE EMISSIONS
LEE PAVING COMPANY
ABERDEEN, NORTH CAROLINA
September 28, 1989

Larry Oldham
Lee Paving Company

G. Sumner Buck, III
President

Ken Allmendinger
Field Supervisor

RAMCON BUILDING, 223 SCOTT STREET, MEMPHIS, TENNESSEE 38112
TELEPHONE 800/458-4567 IN TENNESSEE 901/458-7000 FAX 901-458-3868

RAMCON
ENVIRONMENTAL CORPORATION

October 18, 1989

Mr. Larry Oldham
Lee Paving Company
P.O. Drawer 1109
Stanford, NC 27330

Re: Particulate Emissions Test: Aberdeen, North Carolina

Dear Mr. Oldham:

Enclosed you will find four copies of our report on the particulate emissions test we conducted at your plant. Based on our test results, the average grain loading of the three test runs do pass both EPA New Source Performance Standards and those set by the State of North Carolina. Therefore, the plant is operating in compliance with State and Federal Standards.

You will want to sign the report covers and send two copies to:

Mr. Gene Towe
North Carolina Department
of Natural Resources
Wachovia Bldg. Suite 714
Fayetteville, NC 28301

You will need to keep one copy of the report at the plant. We certainly have enjoyed working with you. Please let us know if we can be of further assistance.

Sincerely,

G. Sumner Buck, III
President

GSBIII:kh

Enclosures

RAMCON BUILDING, 223 SCOTT STREET, MEMPHIS, TENNESSEE 38112
TELEPHONE 800/458-4567 IN TENNESSEE 901/458-7000 FAX 901-458-3868

TABLE OF CONTENTS

I.	INTRODUCTION	1
II.	TEST RESULTS	1
III.	TEST PROCEDURES	2
IV.	THE SOURCE	4
V.	EQUIPMENT USED	9
VI.	LABORATORY PROCEDURES & RESULTS	10
VII.	CALCULATIONS	15
VIII.	FIELD DATA	26
IX.	CALIBRATIONS	32
X.	RAMCON PERSONNEL	39

I. INTRODUCTION

On September 28, 1989 personnel from RAMCON Environmental Corporation conducted a source emissions test for particulate emissions compliance at Lee Paving Company's Astec drum mix asphalt plant located in Aberdeen, North Carolina. RAMCON personnel conducting the test were Ken Allmendinger, Field Supervisor and Murphy O'Neal. Kim Hipson was responsible for the laboratory analysis including taring the beakers and filters and recording final data in the laboratory record books. Custody of the samples was limited to Mr. Allmendinger and Ms. Hipson.

The purpose of the test was to determine if the rate of particulate emissions from this plant's baghouse is below or equal to the allowable N.S.P.S. emissions limit set by US EPA and the State of North Carolina.

II. TEST RESULTS

Table I summarizes the test results. The grain loading limitation for EPA is .04 gr/dscf as specified in 39 FR 9314, March 8, 1974, 60.92 Standards for Particulate Matter (1), as amended. The allowable emissions for the State of North Carolina are the same as those set by EPA.

Mr. Gene Towe of North Carolina's Department of Natural Resources observed the testing conducted by RAMCON Environmental.

TABLE I

SUMMARY OF TEST RESULTS

September 28, 1989

Test Run	Time	Grain Loading	Isokinetic Variation	Actual Emissions
1	09:24 to 10:26	0.0170 gr/DSCF	99.5%	1.7 lbs/hr
2	10:55 to 11:56	0.0167 gr/DSCF	93.7%	1.8 lbs/hr
3	12:18 to 13:19	0.0299 gr/DSCF	92.8%	3.3 lbs/hr
	Average:	0.0212 gr/DSCF		2.3 lbs/hr

On the basis of these test results, the average grain loading of the three test runs was below the .04 gr/DSCF allowable emissions limitation set by EPA and the State of North Carolina. Therefore, the plant is operating in compliance with State and Federal Standards.

III. TEST PROCEDURES

A. Method Used: Method 5 source sampling was conducted in accordance with requirements of the U.S. Environmental Protection Agency as set forth in 39 FR 9314, March 8, 1974, 60.93, as amended.

B. Problems Encountered: No problems were encountered that affected testing.

C. Sampling Site: The emissions test was conducted after a baghouse on a rectangular stack measuring 40.5" x 27.5" with an equivalent diameter of 32.8". Five sampling ports were placed 24.0" down (0.7 diameters upstream) from the top of the stack and 252" up (7.7 diameters downstream) from the last flow disturbance. The ports were evenly spaced on 8.1" centers. The two outside ports are 4.0" from the side walls of the stack. Thirty points were sampled, six through each port for two minutes each.

Points on a Diameter	Probe Mark
1	*7.8"
2	12.4"
3	17.0"
4	21.5"
5	26.1"
6	30.7"

*Measurements include a 5.5" standoff.

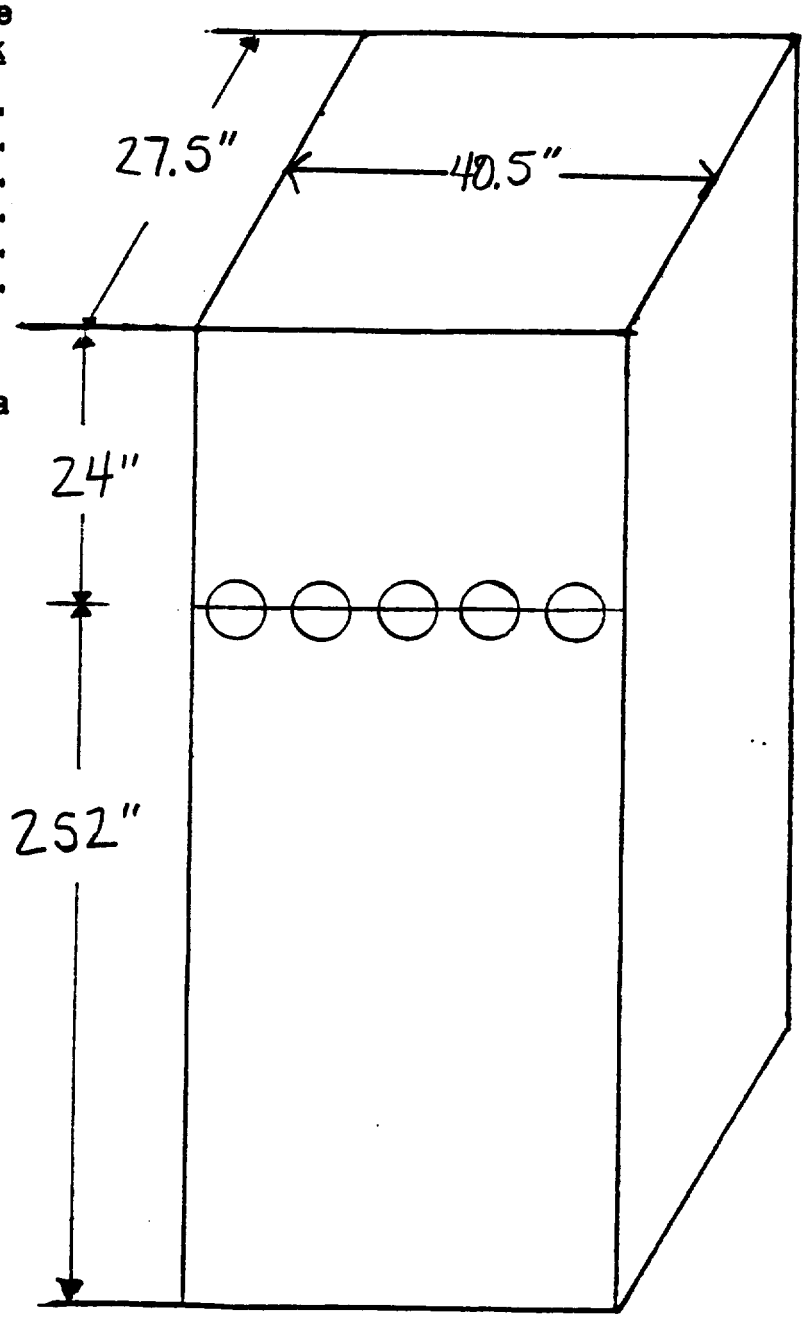

IV. THE SOURCE

IV. THE SOURCE

Lee Paving employs an Astec drum mix asphalt plant which is used to manufacture hot mix asphalt for road pavement. The process consists of blending prescribed portions of cold feed materials (sand, gravel, screenings, chips, etc.) uniformly and adding sufficient hot asphalt oil to bind the mixture together. After the hot asphalt mix is manufactured at the plant, it is transported to the location where it is to be applied. The hot asphalt mix is spread evenly over the surface with a paver then compacted with a heavy roller to produce the final product.

The following to a general description of the plant's manufacturing process: The cold feed materials (aggregate) are dumped into four separate bins which in turn feed a common continuous conveyor. The aggregate is dispensed from the bins in accordance with the desired formulation onto the cold feed system conveyor, to an inclined weigh conveyor, then to a rotating drum for continuous mixing and drying at approximately 300°F. The required amount of hot asphalt oil is then injected onto and mixed into the dried aggregate. The now newly formed hot asphalt mix is pulled to the top of a storage silo by a conveyor. The hot asphalt mix is then discharged from the storage silo through a slide gate into waiting dump trucks which transports the material to a final destination for spreading. The rated capacity of the plant will vary with each aggregate mix and moisture content with a 5% surface moisture removal.

The drum mixer used a burner fired with #2 fuel oil to heat air to dry the aggregate, and the motion of the rotating drum to blend the aggregate. The air is drawn into the system via an exhaust fan. After passing through the gas burner and the mixing drum, the air passes through a baghouse. The baghouse is manufactured by Astec. The exhaust gasses are drawn through the baghouse and discharged to the atmosphere through the stack. The design pressure drop across the tube sheet is 2-6 inches of water. The particulate matter, which is removed by the baghouse, is reinjected into the drum mixer.

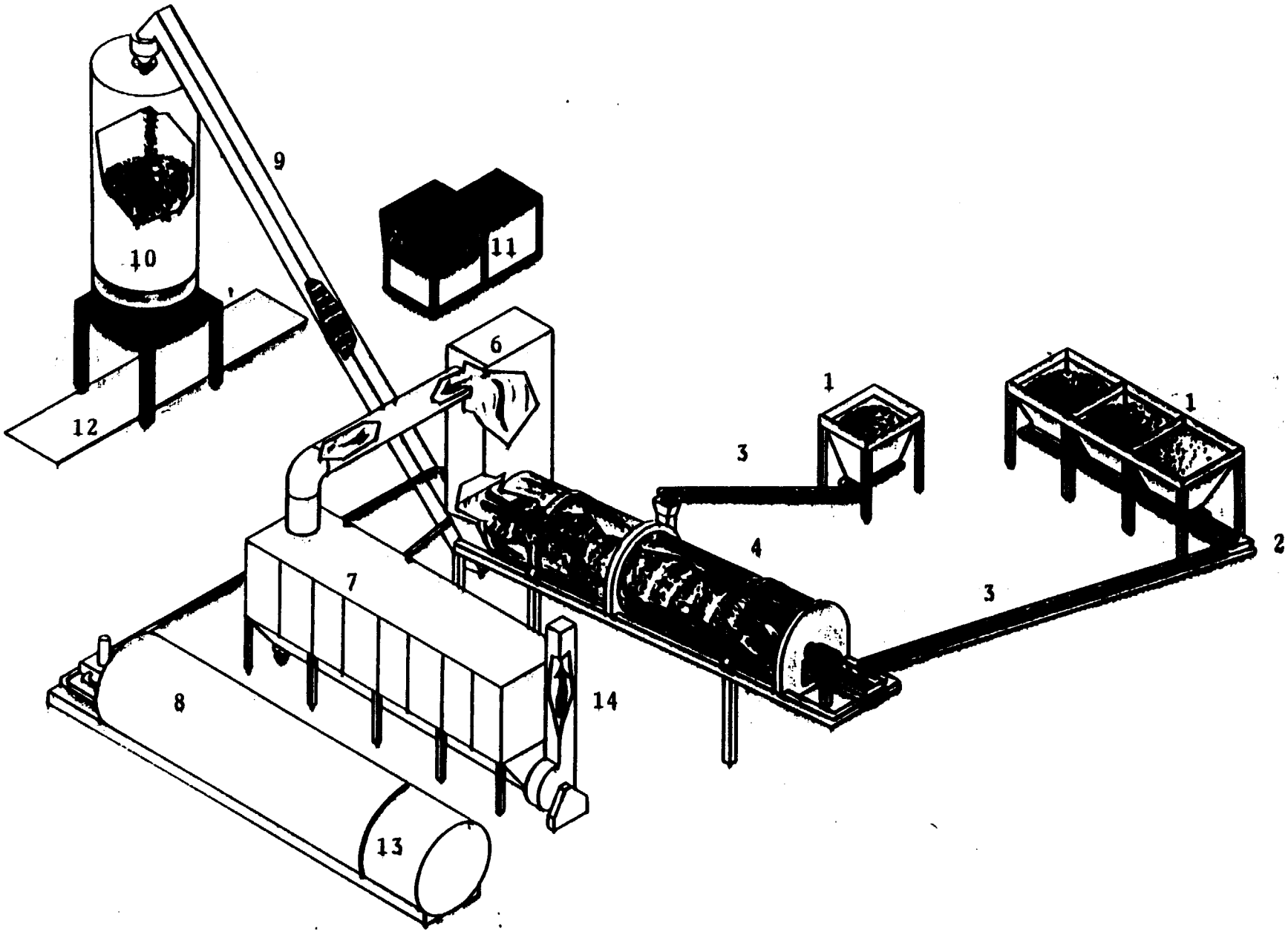

ASTEC - DRUM MIX BAGHOUSE

1. Aggregate bins: Virgin aggregate is fed individually into each of four bins by type. It is metered onto a conveyor belt running under the bins to a shaker screen. The proporation of each aggregate type is determined by the job mix formula and pre-set to be metered out to meet these specifications.

2. Preliminary oversize screen: The aggregate is fed through a shaker screen where oversize rocks and foreign material is screened out of the mix.

3. Weigh conveyor belt: The aggregate is conveyed to the rotary drum dryer on a conveyor belt which weighs the material. The production rate is determined by this weight reading.

4. Rotary drum dryer/mixer: The aggregate is fed into the rotary drum dryer where it is tumbled by flighting into a veil in front of a flame which drives off the moisture. Further mixing is also accomplished in this drum. Hot liquid asphalt is injected approximately one-third of the way down the inclined drum where it is mixed with the aggregate.

5. Burner: The fuel fired burner is used to provide the flame which drys the aggregate.

6. Knock off baffleing: A baffeling plate is inserted in the "dirty" side plenum as a knock out for heavy particles in the air stream. These particles fall to the bottom of the baghouse.

7. Baghouse: The hot gases are pulled through the bags into the clean air plenum. The solid particulate matter is trapped on the dust coat buildup on the bags. A bag cleaning cycle consisting of jet burst of air from the inside (or clean air side) of the bags sends a large bubble of air down the inside of the bags shaking loose buildup on the bag surface. This particulate matter is collected at the bottom of the baghouse and reinjected into the drum mixer where it is used as part of the finished project.

8. Liquid asphalt storage: The liquid asphalt is stored in this heated tank until it is needed in the mixer. The amount of asphalt content and its temperature are pre-set for each different type job.

9. Conveyor to surge/storage bin: The finished product of aggregate mixed with liquid asphalt is conveyed to a surge bin.

10. Surge/Storage bin: The asphaltic cement is dumped into this surge bin and metered out to dump trucks which pull underneath a slide gate at the bottom of the bin.

11. Control/operators house: The entire plant operation is controlled from this operator's house.

12. Truck loading scale: As the trucks receive the asphalt from the storage/surge bin they are weighed on the loading scale which tells the plant operator the amount of asphalt that is being trucked on each individual load.

13. Fuel Storage

14. Stack

DATA SUMMARY

Plant

1. Manufacturer of plant ASTEC.
2. Designed maximum operating capacity 250 TPH @ 5 % moisture.
3. Actual operation rate SEE (ATTACH) TPH @ 4.68 % moisture.
4. Startup date 9/26/89.
5. Type of fuel used in dryer #2 INDUSTRIAL LITE
6. Quanity of fuel consumption _____.

Aggregate

7. Name/type of mix HDS - (HEAVY DUTY SURFACE COARSE
8. Percent asphalt in mix 5.3 %.
9. Temperature of asphalt 300° F.
10. Sieve/Screening analysis: % Passing;

1"		3/8"	96.9	#40	22
3/4"	100	#4	66	#80	10
1/2"	100	#8	48	#200	5.5

Baghouse

11. Manufacturer ASTEC.
12. No. of bags 364. Type of bags NOMEX.
13. Air to cloth ratio 4.8 to 1. Designed ACFM _____.
14. Square feet of bags 8008.
15. Type of cleaning; pulse jet YES, reverse air _____, plenum pulse _____, other _____.
16. Cleaning cycle time CONTINOUS.
17. Interval between cleaning cycle 10 SECONDS.
18. Pressure drop across baghouse 5 to 8 psi.
19. Pulse pressure on cleaning cycle _____ psi.

COMPANY NAME LEE PAVING CO. DATE 9/28/89

COMPANY REPRESENTATIVE ELBERT THOMAS

Form #REC-03

PLANT DATA

COMPANY NAME LEE PAVING CO.

COMPANY REP. ELBERT THOMAS DATE 9/28/89 PHONE # 776-2736

DATA SOURCE ASPHALT PLANT

PLANT LOCATION ABERDEEN, N.C.

PLANT MFG. ASTEC PLANT MODEL # _____ PLANT TYPE _____

MIX SPECIFICATION # _____ OIL SPECIFICATION # _____

Time 24 Hour	___ Fuel Oil X Nat. Gas ___ Propane ___ Coal ___ _____	Burner Setting _____	Aggregate TPH	Recycle TPH	Liquid Asphalt TPH	Mix Temp. °F	___ Venturi ___ Baghouse Pressure Drop Inches Water
09:30		54	129.56	—	7.25	310	4
09:45		54	148.32	—	8.35	300	4
10:00		85	166		9.25	290	7
10:30		63	148.30	—	8.23	295	3.5
10:45		63	145.27		8.05	311	12
11:00		32	109.21		6.08	297	3.5
11:15		36 ~~[illegible]~~	110.33		6.12	293	2
11:30		45	126.90		7.10	303	2
1145		45	126.88		7.21	302	2
12:00		53	145.87		8.12	294	2 1/2
12:15		52	144.68		7.97	305	12
1230		33	105.77		5.94	295	17
1245		36	111.08		6.11	299	17
1315		35	108.85		6.18	299	6.5

V. EQUIPMENT USED

V. EQUIPMENT USED

Equipment used on conducting the particulate emissions test was:

A. The Lear Siegler PM-100 stack sampler with appropriate auxillary equipment and glassware. The train was set up according to the schematic on the nex page.

B. An Airguide Instruments Model 211-B (uncorrected) aneroid barometer was used to check the barometric pressure.

C. Weston dial thermometers are used to check meter temperatures. An Analogic Model 2572 Digital Thermocouple is used for stack temperatures.

D. A Hays 621 Analyzer was used to measure the oxygen, carbon dioxide and carbon monoxide content of the stack gases. For non-combustion sources, A Bacharach Instrument Company Fyrite is used for the gas analysis.

E. Filters are mady by Schleicher and Schuell and are type 1-HV with a porosity of .03 microns.

F. The acetone is reagent grade or ACS grade with a residue of $\leq$ .001.

VI. LABORATORY PROCEDURES & RESULTS

LABORATORY PROCEDURES FOR PARTICULATE SAMPLING

I. Field Preparation

A. FILTERS: Fiberglass 4" sampling filters are prepared as follows:

Filters are removed from their box and numbered on the back side with a felt pen. The numbering system is continuous from job to job. The filters are placed in a desiccator to dry for at least 24 hours. Clean plastic petri dishes, also numbered, top and bottom, are placed in the desiccator with the filters. After desiccation, the filters are removed, one at a time, and weighed on the Sartorius analytical balance then placed in the correspondingly numbered petri dish. Weights are then recorded in the lab record books. Three filters are used for each complete particulate source emissions test and there should be several extra filters included as spares.

B. SILICA GEL: Silica Gel used for the test is prepared as follows:

Approximately 200 g of silica gel is placed in a wide mouth "Mason" type jar and dried in an oven at 175°C for two hours. The open jars are removed and placed in a desiccator until cool for two hours and then tightly sealed. The jars are then numbered and weighed on the triple beam balance to the closest tenth of a gram. This weight is recorded for each sealed jar. The number of silica gel jars used is the same as the number of filters. Silica gel should be indicating type, 6-16 mesh.

II. Post - Testing Lab Analysis

A. FILTERS: The filters are returned to the lab in their sealed petri dishes. In the lab, the dishes are opened and placed into a desiccator for at least 24 hours. Then the filters are weighed continuously every six hours until a constant weight is achieved. All data is recorded on the laboratory forms that will be bound in the test report.

B. SILICA GEL: The silica gel used in the stack test is returned to the appropriate mason jar and sealed for transport to the laboratory where it is reweighed to a constant weight on a triple beam balance to the nearest tenth of a gram.

C. PROBE RINSINGS: In all tests where a probe washout analysis is necessary, this is accomplished in accordance with procedures specified in "EPA Reference Method 5". These samples are returned to the lab in sealed mason jars for analysis. The front half of the filter holder is washed in accordance with the same procedures and included with the probe wash. Reagent or ACS grade acetone is used as the solvent. The backhalf of the filter holder is washed with deionized water into the impinger catch for appropriate analysis.

D. IMPINGER CATCH: In some testing cases, the liquid collected in the impingers must be analyzed for solid content. This involves a similar procedure to the probe wash solids determination, except that the liquid is deionized water.

E. ACETONE: A blank analysis of acetone is conducted from the one gallon glass container used in the field preparation. This acetone was used in the field for rinsing the probe, nozzle, and top half of the filter holder. A blank analysis is performed prior to testing on all new containers of acetone received from the manufacturer to insure that the quality of the acetone used will be exceed the .001% residual purity standard.

SPECIAL NOTE

When sampling sources high in moisture content, (such as asphalt plants) the filter paper sometimes sticks to the filter holder. When removing the filter, it may tear. In order to maintain control of any small pieces of filter paper which may be easily lost, they are washed with acetone into the probe washing. This makes the filter weight light (sometimes negative) and the probe wash correspondingly heavier. this laboratory procedure is taught by EPA in the "Quality Assurance for Source Emissions Workshop" at Research Triangle Park and is approved by EPA.

WEIGHING PROCEDURE - SARTORIUS ANALYTICAL BALANCE

The Sartorius balance is accurate to 0.1 mg and has a maximum capacity of 200 grams. The balance precision (standard deviation) is 0.05 mg. Before weighing an item, the balance should first be zeroed. This step should be taken before every series of weighings. To do this, the balance should have all weight adjustments at the "zero" position. The beam arrest lever (on the lower left hand side toward the rear of the balance) is then slowly pressed downward to the full release position. The lighted vernier scale on the front of the cabinet should align with the "zero" with the mark on the cabinet. If it is not so aligned, the adjustment knob on the right hand side (near the rear of the cabinet) should be turned carefully until the marks align. Now return the beam arrest to the horizontal arrest position. The balance is now "zeroed".

To weigh an item, it is first placed on the pan. And the sliding doors are closed to avoid air current disturbance. The weight adjustment knob on the right hand side must be at "zero". The beam arrest is then slowly turned upward. The lighted scale at the front of the cabinet will now indicate the weight of the item in grams. If the scale goes past the divided area, the item then exceeds 100 g weight (about 3 1/2 ounces) and it is necessary to arrest the balance (beam arrest lever) and move the lever for 100 g weight away from you. It is located on the left hand side of the cabinet near the front, and is the knob closest to the side of the cabinet. The balance will not weigh items greater than 200 grams in mass, and trying to do this might harm the balance. Remember, this is a delicate precision instrument.

After the beam is arrested in either weight range, the procedure is the same. When the weight of the item in grams is found, "dial in" that amount with the two knobs on the left hand side (near the 100 g lever) color coded yellow and green. As you dial the weight, the digits will appear on the front of the cabinet. When the proper amount is dialed, carefully move the arrest lever down with a slow, steady turn of the wrist. The lighted dial will appear, and the right hand side knob (front of cabinet) is turned to align the mark with the lower of the two lighted scale divisions which the mark appears between. when these marks are aligned, the two lighted digits along with the two indicated on the right hand window on the cabinet front are fractional weight in grams (the decimal would appear before the lighted digits) and the whole number of grams weight is the amount "dialed in" on the left.

In general, be sure that the beam is in "arrest" position before placing weight on or taking weight off of the pan. Don't "dial in" weight unless the beam is arrested. The balance is sensitive to even a hand on the table near the balance, so be careful and painstaking in every movement while weighing.

Form REC#8

SAMPLE ANALYTICAL DATA FORM

Plant Location LEE PAVING — Relative humidity in lab 50 %

Sample Location hot mix asphalt plant — Density of Acetone (pa) .7857 mg/ml

Blank volume (V_a) 200 ml

Date/Time wt. blank 10/4/89 — Gross wt. 95.0632 mg

Date/Time wt. blank 10/5/89 — Gross wt. 95.0632 mg

Ave. Gross wt. 95.0632 mg

Tare wt. 95.0630 mg

Weight of blank (m_{ab}) .0002 mg

Acetone blank residue concentration (C_a) $(C_a) = (M_{ab}) / (V_a)\ (p_a) =$ (.000003 mg/g)

Weight of residue in acetone wash: $W_a = C_a\ V_{aw}\ p_a =$ (.000003)(200)(.7857) = (.0002)

		Run # 1	Run # 2	Run # 3
Acetone rinse volume (V_{aw})	ml	200	200	200
Date/Time of wt 10/4/89; 16:00 hr Gross wt	g	159.7439	137.1768	137.1240
Date/Time of wt 10/5/89; 8:00 hr Gross wt	g	159.7444	137.1768	137.1245
Average Gross wt	g	159.7442	137.1768	137.1243
Tare wt	g	159.6955	137.1291	137.0485
Less acetone blank wt (W_a)	g	0.0002	0.0002	0.0002
Wt of particulate in acetone rinse (m_a)	g	0.0485	0.0475	0.0816

Filter Numbers	#	BS-3504	BS-3505	DA-3602
Date/Time of wt 10/2/89; 16:00 Gross wt	g	0.5326	0.5269	0.6020
Date/Time of wt 10/4/89; 13:00 Gross wt	g	0.5324	0.5267	0.6016
Average Gross wt	g	0.5325	0.5268	0.6018
Tare wt	g	0.5309	0.5266	0.5958

Weight of particulate on filters(s) (m_f)	g	0.0016	0.0002	0.0060
Weight of particulate in acetone rinse	g	0.0485	0.0475	0.0816
Total weight of particulate (m_n)	g	0.0501	0.0477	0.0876

Note: In no case should a blank residue greater than 0.01 mg/g (or 0.001% of the blank weight) be subtracted from the sample weight.

Remarks

Signature of analyst K. Hixson — Signature of reviewer

Lee Pavine
Company Name

9-28-89
Date

REFERENCE METHOD 3: GAS ANALYSIS BY FYRITE

FUEL	F_o FACTORS
WOOD	1.0540
BARK	1.0830
ANTHRACITE	1.0699
BITUMINOUS	1.1398
LIGNITE	1.0761
OIL	1.3465
GAS	1.7489
PROPANE	1.5095
BUTANE	1.4791

$O_2\% = 20.9 - [F_o \times CO_2\%]$

RUN #1: ____ = 20.9 - [____ x ____]

RUN #2: ____ = 20.9 - [____ x ____]

RUN #3 ____ = 20.9 - [____ x ____]

RUN 1:	$CO_2\%$	5.5	$CO_2\%$	5.0	$CO_2\%$	5.5	AVG.	5.3
	$O_2\%$	9.5	$O_2\%$	9.5	$O_2\%$	10.0	AVG.	9.7
	$N_2\%$		$N_2\%$		$N_2\%$		AVG.	85.0
RUN 2:	$CO_2\%$	5.0	$CO_2\%$	5.5	$CO_2\%$	5.5	AVG.	5.3
	$O_2\%$	8.0	$O_2\%$	8.5	$O_2\%$	9.0	AVG.	8.5
	$N_2\%$		$N_2\%$		$N_2\%$		AVG.	86.2
RUN 3:	$CO_2\%$	3.0	$CO_2\%$	4.5	$CO_2\%$	5.0	AVG.	4.2
	$O_2\%$	12.0	$O_2\%$	12.5	$O_2\%$	12.5	AVG.	12.3
	$N_2\%$		$N_2\%$		$N_2\%$		AVG.	83.5

VII. CALCULATIONS

LEE PAVING COMPANY
ABERDEEN, NORTH CAROLINA

SUMMARY OF TEST DATA

		9-28-89 RUN #1	9-28-89 RUN #2	9-28-89 RUN #3
SAMPLING TRAIN DATA				
	start	09:24	10:55	12:18
	finish	10:26	11:56	13:19
1. Sampling time, minutes	θ	60.0	60.0	60.0
2. Sampling nozzle diameter, in.	D_n	.3000	.3000	.3000
3. Sampling nozzle cross-sect. area, ft^2	A_n	.000491	.000491	.000491
4. Isokinetic variation	I	99.5	93.7	92.8
5. Sample gas volume - meter cond., cf.	V_m	45.360	44.754	46.203
6. Average meter temperature, ^oR	T_m	539	548	553
7. Avg. oriface pressure drop, in. H_2O	dH	1.82	1.77	1.78
8. Total particulate collected, mg.	M_n	50.10	47.70	87.60
VELOCITY TRAVERSE DATA				
9. Stack area, ft^2	A	7.70	7.70	7.70
10. Absolute stack gas pressure, in. Hg.	P_s	30.16	30.16	30.16
11. Barometric pressure, in. Hg.	P_{bar}	30.16	30.16	30.16
12. Avg. absolute stack temperature, R^o	T_s	701	693	689
13. Average $-\sqrt{\text{vel. head}}$, (C_p= .78)	$-\sqrt{dP}$	0.79	0.77	0.78
14. Average stack gas velocity, ft./sec.	V_s	50.17	48.23	48.58
STACK MOISTURE CONTENT				
15. Total water collected by train, ml.	V_{ic}	456.00	366.00	348.00
16. Moisture in stack gas, %	B_{ws}	32.11	28.17	26.65
EMISSIONS DATA				
17. Stack gas flow rate, dscf/hr.(000's)	Q_{sd}	716	737	763
18. Stack gas flow rate, cfm	acfm	23179	22282	22444
19. Particulate concentration, gr/dscf	C_s	0.0170	0.0167	0.0299
20. Particulate concentration, lb/hr	E	1.74	1.76	3.26
21. Particulate concentration, lb/mBtu	E'	0.00000	0.00000	0.00000
ORSAT DATA				
22. Percent CO_2 by volume	CO_2	5.30	5.30	4.20
23. Percent O_2 by volume	O_2	9.70	8.50	12.30
24. Percent CO by volume	CO	.00	.00	.00
25. Percent N_2 by volume	N_2	85.00	86.20	83.50

Format: summryR3

$$V_{m(std)} = V_m \left[\frac{T_{(std)}}{T_m}\right]\left[\frac{P_{bar} + \frac{dH}{13.6}}{P_{(std)}}\right] = 17.64 \frac{^oR}{in.Hg}\ Y\ V_m \left[\frac{P_{bar} + \frac{dH}{13.6}}{T_m}\right]$$

Where:

$V_{m(std)}$ = Dry Gas Volume through meter at standard conditions, cu. ft.

V_m = Dry Gas Volume measured by meter, cu. ft.

P_{bar} = Barometric pressure at oriface meter, in. Hg.

P_{std} = Standard absolute pressure,(29.92 in. Hg.).

T_m = Absolute temperature at meter ^oR.

T_{std} = Standard absolute temperature (528^oR).

dH = Average pressure drop across oriface meter, in. H_2O.

Y = Dry gas meter calibration factor.

13.6 = Inches water per inches Hg.

RUN 1:

$$V_{m(std)} = (17.64)(1.011)(45.360)\left[\frac{(30.16) + \frac{1.82}{13.6}}{539}\right] = 45.466 \text{ dscf}$$

RUN 2:

$$V_{m(std)} = (17.64)(1.011)(44.754)\left[\frac{(30.16) + \frac{1.77}{13.6}}{548}\right] = 44.117 \text{ dscf}$$

RUN 3:

$$V_{m(std)} = (17.64)(1.011)(46.203)\left[\frac{(30.16) + \frac{1.78}{13.6}}{553}\right] = 45.134 \text{ dscf}$$

Particulate concentration C_s' gr./dscf.

$$C_s' = \left[0.0154 \frac{gr}{mg} \right] \left[\frac{M_n}{V_{m(std)}} \right]$$

Where:

C_s' = Concentration of particulate matter in stack gas, dry basis, corrected to standard conditions,gr./dscf.

M_n = Total amount of particulate matter collected, mg.

$V_{m(std)}$ = Dry gas volume through meter at standard conditions, cu. ft.

Run 1:

$$C_s' = \left[0.0154 \frac{gr}{mg} \right] \left[\frac{50.10}{45.466} \right] = 0.0170 \text{ gr./dscf.}$$

Run 2:

$$C_s' = \left[0.0154 \frac{gr}{mg} \right] \left[\frac{47.70}{44.117} \right] = 0.0167 \text{ gr./dscf.}$$

Run 3:

$$C_s' = \left[0.0154 \frac{gr}{mg} \right] \left[\frac{87.60}{45.134} \right] = 0.0299 \text{ gr./dscf.}$$

LEE PAVING COMPANY
ABERDEEN, NORTH CAROLINA

Dry Molecular Weight

$$M_d = 0.44(\%CO_2) + 0.32(\%O_2) + 0.28(\%CO + \%N_2)$$

Where:

M_d = Dry molecular weight, lb./lb.-mole.

$\%CO_2$ = Percent carbon dioxide by volume (dry basis).

$\%O_2$ = Percent oxygen by volume (dry basis).

$\%N_2$ = Percent nitrogen by volume (dry basis).

%CO = Percent carbon monoxide by volume (dry basis).

0.264 = Ratio of O_2 to N_2 in air, v/v.

0.28 = Molecular weight of N_2 or CO, divided by 100.

0.32 = Molecular weight of O_2 divided by 100.

0.44 = Molecular weight of CO_2 divided by 100.

Run 1:

$$M_d = 0.44(\ 5.30\%) + 0.32(\ 9.70\%) + 0.28(\ .00\% + 85.00\%) = 29.24 \ \frac{lb}{lb\text{-}mole}$$

Run 2:

$$M_d = 0.44(\ 5.30\%) + 0.32(\ 8.50\%) + 0.28(\ .00\% + 86.20\%) = 29.19 \ \frac{lb}{lb\text{-}mole}$$

Run 3:

$$M_d = 0.44(\ 4.20\%) + 0.32(12.30\%) + 0.28(\ .00\% + 83.50\%) = 29.16 \ \frac{lb}{lb\text{-}mole}$$

$$V_{wc_{std}} = \left[V_f - V_i \right] \left[\frac{p_w \; R \; T_{(std)}}{M_w \quad P_{(std)}} \right] = 0.04707 \left[V_f - V_i \right]$$

$$V_{wsg_{std}} = \left[W_f - W_i \right] \left[\frac{R \quad T_{(std)}}{M_w \quad P_{(std)}} \right] = 0.04715 \left[W_f - W_i \right]$$

Where:

0.04707 = Conversion factor, $ft.^3/ml$.

0.04715 = Conversion factor, $ft.^3/g$.

$V_{wc_{std}}$ = Volume of water vapor condensed (standard conditions), scf.

$V_{wsg_{std}}$ = Volume of water vapor collected in silica gel (standard conditions), ml.

$V_f - V_i$ = Final volume of impinger contents less initial volume, ml.

$W_f - W_i$ = Final weight of silica gel less initial weight, g.

p_w = Density of water, 0.002201 lb/ml.

R = Ideal gas constant, 21.85 in.Hg. (cu.ft./lb.-mole)(^oR).

M_w = Molecular weight of water vapor, 18.0 lb/lb-mole.

T_{std} = Absolute temperature at standard conditions, 528^oR.

P_{std} = Absolute pressure at standard conditions, 29.92 inches Hg.

Run 1:

$V_{wc(std)}$ = (0.04707) (442.0) = 20.8 cu.ft
$V_{wsg(std)}$ = (0.04715) (14.0) = 0.7 cu.ft

Run 2:

$V_{wc(std)}$ = (0.04707) (350.0) = 16.5 cu.ft
$V_{wsg(std)}$ = (0.04715) (16.0) = 0.8 cu.ft

Run 3:

$V_{wc(std)}$ = (0.04707) (336.0) = 15.8 cu.ft
$V_{wsg(std)}$ = (0.04715) (12.0) = 0.6 cu.ft

LEE PAVING COMPANY
ABERDEEN, NORTH CAROLINA

Moisture Content of Stack Gases

$$B_{ws} = \frac{V_{wc_{std}} + V_{wsg_{std}}}{V_{wc_{std}} + V_{wsg_{std}} + V_{m_{std}}} \times 100$$

Where:

B_{ws} = Proportion of water vapor, by volume, in the gas stream.

V_m = Dry gas volume measured by dry gas meter,(dcf).

$V_{wc_{std}}$ = Volume of water vapor condensed corrected to standard conditions (scf).

$V_{wsg_{std}}$ = Volume of water vapor collected in silica gel corrected to standard conditions (scf).

Run 1:

$$B_{ws} = \frac{20.8 + 0.7}{20.8 + 0.7 + 45.466} \times 100 = 32.11\ \%$$

Run 2:

$$B_{ws} = \frac{16.5 + 0.8}{16.5 + 0.8 + 44.117} \times 100 = 28.17\ \%$$

Run 3:

$$B_{ws} = \frac{15.8 + 0.6}{15.8 + 0.6 + 45.134} \times 100 = 26.65\ \%$$

$$M_s = M_d (1 - B_{ws}) + 18 (B_{ws})$$

Where:

M_s = Molecular weight of stack gas, wet basis, (lb./lb.-mole).

M_d = Molecular weight of stack gas, dry basis, (lb./lb.-mole).

Run 1:

$$M_s = 29.24 (1 - 32.11) + 18 (32.11) = 25.63 \text{ (lb./lb.-mole)}$$

Run 2:

$$M_s = 29.19 (1 - 28.17) + 18 (28.17) = 26.04 \text{ (lb./lb.-mole)}$$

Run 3:

$$M_s = 29.16 (1 - 26.65) + 18 (26.65) = 26.19 \text{ (lb./lb.-mole)}$$

LEE PAVING COMPANY
ABERDEEN, NORTH CAROLINA

Stack Gas Velocity

$$V_s = K_p\ C_p \left[\sqrt{dP} \right] \text{avg.} \sqrt{\frac{T_{s(avg.)}}{P_s\ M_s}}$$

Where:

V_s	=	Average velocity of gas stream in stack, ft./sec.
K_p	=	85.49 ft/sec $\left[(g/g\text{-mole})\text{-}(mm\ Hg)\ /\ (^oK)(\ mm\ H_2O \right]^{1/2}$
C_p	=	Pitot tube coefficient, (dimensionless).
dP	=	Velocity head of stack gas, in. H_2O.
P_{bar}	=	Barometric pressure at measurement site, (in. Hg).
P_g	=	Stack static pressure, (in. Hg).
P_s	=	Absolute stack gas pressure, (in. Hg) = $P_{bar} + P_g$
P_{std}	=	Standard absolute pressure, (29.92 in. Hg).
t_s	=	Stack temperature, (^{o}f).
T_s	=	Absolute stack temperature, (^{o}R). = 460 + t_s.
M_s	=	Molecular weight of stack gas, wet basis, (lb/lb-mole).

Run 1:

$$V = (85.49)\ (\ .78)\ (\ 0.79) \sqrt{\frac{701}{(30.16)(25.63)}} = 50.17 \text{ ft/sec.}$$

Run 2:

$$V = (85.49)\ (\ .78)\ (\ 0.77) \sqrt{\frac{693}{(30.16)(26.04)}} = 48.23 \text{ ft/sec.}$$

Run 3:

$$V = (85.49)\ (\ .78)\ (\ 0.78) \sqrt{\frac{689}{(30.16)(26.19)}} = 48.58 \text{ ft/sec.}$$

Stack Gas Flow Rate

$$Q_{sd} = 3600 \left[1 - B_{wc} \right] V_s \; A \left[\frac{T_{std}}{T_{stk}} \right] \left[\frac{P_s}{P_{std}} \right]$$

Where:

Q_{sd}	=	Dry volumetric stack gas flow rate corrected to standard conditions, (dscf/hr).
A	=	Cross sectional area of stack, (ft.^{2}).
3600	=	Conversion factor, (sec./hr.).
t_s	=	Stack temperature, (^{o}f).
T_s	=	Absolute stack temperature, (^{o}R).
T_{std}	=	Standard absolute temperature, (528°R).
P_{bar}	=	Barometric pressure at measurement site, (in.Hg.).
P_g	=	Stack static pressure, (in.Hg.).
P_s	=	Absolute stack gas pressure, (in.Hg.); = $P_{bar} + P_g$
P_{std}	=	Standard absolute pressure, (29.92 in.Hg.).

Run 1:

$$Q_{sd}=3600(1-\ .3211\ )(\ 50.17)(\ 7.70)\left[\frac{528}{701}\right]\left[\frac{30.16}{29.92}\right]=\ 716850.8\ \frac{dscf}{hr}$$

Run 2:

$$Q_{sd}=3600(1-\ .2817\ )(\ 48.23)(\ 7.70)\left[\frac{528}{693}\right]\left[\frac{30.16}{29.92}\right]=\ 737542.1\ \frac{dscf}{hr}$$

Run 3:

$$Q_{sd}=3600(1-\ .2665\ )(\ 48.58)(\ 7.70)\left[\frac{528}{689}\right]\left[\frac{30.16}{29.92}\right]=\ 763018.9\ \frac{dscf}{hr}$$

$$E = \frac{(C_s)\ (Q_{sd})}{7000\ gr./lb.} = lb. / hr.$$

Where:

E = Emissions rate, lb/hr.

C_s = Concentration of particulate matter in stack gas, dry basis, corrected to standard conditions, gr/dscf.

Q_{sd} = Dry volumetric stack gas flow rate corrected to standard conditions, dscf/hr.

Run 1:

$$E = \frac{(0.0170)\ (716850.8)}{7000} = 1.74\ lb. / hr.$$

Run 2:

$$E = \frac{(0.0167)\ (737542.1)}{7000} = 1.76\ lb. / hr.$$

Run 3:

$$E = \frac{(0.0299)\ (763018.9)}{7000} = 3.26\ lb. / hr.$$

$$I = 100\ T_s \left[\frac{0.002669\ V_{ic}}{60\ \theta} + \frac{(V_m / T_m)\ (P_{bar} + dH / 13.6)}{V_s\ P_s\ A_n} \right]$$

Where:

I	=	Percent isokinetic sampling.
100	=	Conversion to percent.
T_s	=	Absolute average stack gas temperature, ^oR.
0.002669	=	Conversion factor, Hg - ft^3/ml - ^oR.
V_{ic}	=	Ttl vol of liquid collected in impingers and silica gel, ml.
T_m	=	Absolute average dry gas meter temperature, ^oR.
P_{bar}	=	Barometric pressure at sampling site, (in. Hg).
dH	=	Av pressure differential across the oriface meter, (in.H_2O).
13.6	=	Specific gravity of mercury.
60	=	Conversion seconds to minutes.
θ	=	Total sampling time, minutes.
V_s	=	Stack gas velocity, ft./sec.
P_s	=	Absolute stack gas pressure, in. Hg.
A_n	=	Cross sectional area of nozzle, ft^2.

Run 1:

$$I = (100)(\ 701\ ) \left[\frac{(0.002669)(456.00) + \frac{45.360}{539} \left[30.16 + \frac{1.82}{13.6} \right]}{60\ (\ 60.0\ )\ (\ 50.17\ )\ (\ 30.16\ )\ (\ .000491\ )} \right] = 99.5\%$$

Run 2:

$$I = (100)(\ 693\ ) \left[\frac{(0.002669)(366.00) + \frac{44.754}{548} \left[30.16 + \frac{1.77}{13.6} \right]}{60\ (\ 60.0\ )\ (\ 48.23\ )\ (\ 30.16\ )\ (\ .000491\ )} \right] = 93.7\%$$

Run 3:

$$I = (100)(\ 689\ ) \left[\frac{(0.002669)(348.00) + \frac{46.203}{553} \left[30.16 + \frac{1.78}{13.6} \right]}{60\ (\ 60.0\ )\ (\ 48.58\ )\ (\ 30.16\ )\ (\ .000491\ )} \right] = 92.8\%$$

VIII. FIELD DATA

RAMCON ENVIRONMENTAL CORPORATION

Plant: Lee Paving
Location: Aberdeen NC
Operator: L. Allmanthiger
Date: 9-28-89
Run No.: 1
Sample Box No.: 1
Meter Box No.: 646882 C-124
Meter H @: 1.53
C Factor: 1.011
Pitot Tube Coefficient Cp: .981

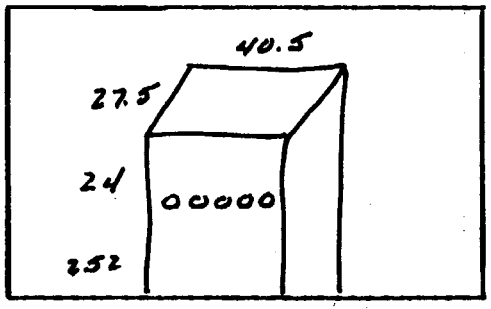

Schematic of Stack Cross Section

Ambient Temperature: 58
Barometric Pressure: 30.16
Assumed Moisture, %: 30
Probe Length, ft: 5 ft

	IMPINGER VOLUME, ml	SILICA GEL WEIGHT, g
FINAL	642	215
INITIAL	200	201
DIFFERENCE	442	14

Nozzle Identification No.: .0004909
Avg. Calibrated Nozzle Dia., (in.): .300/.300/.300
Probe Heater Setting: 4.5
Leak Rate, m^3/min, (cfm): +.009 @ 2"
Probe Liner Material: 316 stainless
Static Pressure, mm Hg (in. Hg): .005
Filter No.: B5-3504 5309

TRAV. PT NO.	SAMPLING TIME (θ) min.	VACUUM in. Hg	STACK TEMP (T_s) °F	VELOCITY HEAD (P_s) in H_2O	PRESSURE DIFF. ORF. MTR in H_2O	GAS SAMPLE VOLUME ft^3	GAS SAMPLE TEMP. AT DRY GAS METER °F Inlet	Outlet	FILTER HOLDER TEMP °F	GAS TEMP LVG CONDENSER OR LAST IMPINGER °F
A) 1	9:24 / 9:26	3	225	.80	2.2	28.413 / 30.17	60	60	230	55
2	9:28	4	225	.95	2.7	32.08	75	60	240	55
3	9:30	3.5	225	.90	2.5	33.78	80	60	235	50
4	9:32	3	230	.78	2.2	35.44	80	60	240	50
5	9:34	3	230	.75	2.1	37.06	85	60	240	50
6	9:36	3	230	.66	1.9	38.59	85	60	240	50
B) 1	9:36:15 / 9:38	3	230	.67	1.9	40.27	85	60	240	50
2	9:40	3.5	240	.80	2.2	41.88	90	60	240	50
3	9:42	4	240	.90	2.5	43.68	90	60	230	50
4	9:44	4	240	.93	2.6	45.52	90	60	230	50
5	9:46	4	240	.88	2.5	47.25	90	60	230	50
6	9:48:15	4	240	.85	2.4	49.08	95	65	235	50
C) 1	9:48:40 / 9:50	2.5	240	.52	1.5	50.57	90	65	235	50

Form #REC-06

RAMCON emissions test log sheet, cont. DATE 9-28-89 LOCATION Aberdeen TEST NO. 1

TRAVERSE POINT	SAMPLING TIME θ (min)	VACUUM mm Hg (in. Hg)	STACK TEMP T_s (°F)	VELOCITY HEAD ΔP_s (in. H_2O)	ORFICE DIFF. PRESSURE ΔH (in. H_2O)	GAS VOLUME Vm ($ft.^3$)	GAS SAMPLE TEMP. (°F) in	GAS SAMPLE TEMP. (°F) out	SAMPLE BOX TEMP. (°F)	IMPINGER TEMP (°F)
2	9:52	2.5	245	.58	1.6	52.01	90	65	235	50
3	9:54	2.5	245	.55	1.5	53.44	95	65	235	50
4	9:56	3	245	.64	1.8	54.91	95	65	235	50
5	9:58	4	245	.80	2.2	56.61	95	65	235	50
6	10:00	3	245	.68	1.9	58.19	100	70	235	50
D) 1	~~10:01:30~~ 10:03	2	240	.35	.98	59.40	95	70	240	50
2	10:05	3	250	.60	1.7	60.87	95	70	240	50
3	10:07	4	250	.73	2.1	62.54	100	70	240	50
4	10:09	4	250	.73	2.1	64.21	100	70	240	50
5	10:11	4.5	250	.90	2.5	66.02	100	70	240	50
6	10:13:20	3	250	.60	1.7	67.51	100	70	240	50
E) 1	~~10:14~~ 10:16	2	240	.35	.98	68.64	95	70	235	50
2	10:18	2	245	.32	.90	69.72	95	70	235	50
3	10:20	2.5	245	.42	1.2	70.94	100	70	235	50
4	10:22	2	245	.28	.79	71.94	100	70	235	50
5	10:24	2	245	.28	.79	72.96	100	70	235	50
6	10:26	2	245	.20	.56	73.773	100	70	235	50
							91.66	65.3		
							96			

(28)

RAMCON ENVIRONMENTAL CORPORATION

Plant: Lee Paving

Location: Aberdeen NC

Operator: K. Allenbaugh

Date: 9-28-89

Run No.: 2

Sample Box No.: 1

Meter Box No.: 646882 C-124

Meter H @: 1.53

C Factor: 1.011

Pitot Tube Coefficient Cp: .781

Schematic of Stack Cross Section

		IMPINGER VOLUME, ml	SILICA GEL WEIGHT, g
Ambient Temperature 63			
Barometric Pressure 30.16	FINAL	550	436
Assumed Moisture, % 30	INITIAL	200	420
Probe Length, ft 32	DIFFERENCE	350	16

Nozzle Identification No. .0004909

Avg. Calibrated Nozzle Dia., (in.) .300/.300/.300

Probe Heater Setting 4.5

Leak Rate, m^3/min. (cfm) +.013 @ 8"

Probe Liner Material 3/6 stainless

Static Pressure, mm Hg (in. Hg) .005

Filter No. BS-3505 5266

TRAV. PT NO.	SAMPLING TIME (θ) min.	VACUUM in. Hg	STACK TEMP (T_s) °F	VELOCITY HEAD (P_s) in H_2O	PRESSURE DIFF. ORF. MTR in H_2O	GAS SAMPLE VOLUME ft^3	GAS SAMPLE TEMP. AT DRY GAS METER °F Inlet	Outlet	FILTER HOLDER TEMP °F	GAS TEMP LVG CONDENSER OR LAST IMPINGER °F
A) 1	10:55 / 10:57	1	205	.37	1.0	73.95 / 75.18	80	75	230	60
2	10:59	2	245	.50	1.4	76.54	90	75	230	55
3	11:01	3	245	.75	2.1	78.17	95	75	235	55
4	11:03	4	235	1.0	2.8	80.11	100	70	235	50
5	11:05	4	235	1.0	2.8	82.07	100	75	240	50
6	11:07	3.5	225	.97	2.7	83.98	100	75	240	50
B) 1	11:07:25 / 11:09	3	225	.90	2.5	85.82	100	75	240	50
2	11:11	3.5	225	1.0	2.8	87.81	100	75	245	50
3	11:13	3.5	225	1.0	2.8	89.68	100	75	245	50
4	11:15	3.5	225	.98	2.8	91.64	105	75	245	50
5	11:17	3	225	.92	2.6	93.44	105	75	245	50
6	11:19:25	3	225	.85	2.4	95.19	105	75	245	50
C) 1	11:19:40 / 11:21	2	225	.62	1.7	96.73	100	75	250	50

Form #REC-06

RAMCON emissions test log sheet, cont. DATE 9-28-89 LOCATION Aberdeen TEST NO. 2

TRAVERSE POINT	SAMPLING TIME θ (min)	VACUUM mm Hg (in. Hg)	STACK TEMP T_s (°F)	VELOCITY HEAD ΔP_s (in. H_2O)	ORFICE DIFF. PRESSURE ΔH (in. H_2O)	GAS VOLUME V_m (ft.^{3})	GAS SAMPLE TEMP. (°F) in	GAS SAMPLE TEMP. (°F) out	SAMPLE BOX TEMP. (°F)	IMPINGER TEMP (°F)
2	11:23	3	225	.77	2.2	98.48	105	75	250	50
3	11:25	3	230	.77	2.2	100.17	105	75	250	50
4	11:27	3	230	.77	2.2	101.84	105	75	250	50
5	11:29	3	235	.70	2.0	103.43	105	75	250	50
6	11:31:40	2	235	.58	1.6	104.90	105	75	245	50
D) 1	~~11:31:55~~ 11:33	2	235	.42	1.2	106.20	100	75	245	50
2	11:35	2	240	.50	1.4	107.57	100	75	245	50
3	11:37	2	240	.53	1.5	108.96	105	75	245	50
4	11:39	2	240	.48	1.3	110.24	105	75	245	50
5	11:41	2	240	.48	1.3	111.53	105	75	245	50
6	11:43:55	2	240	.35	.98	112.66	105	75	245	50
E) 1	~~11:44:35~~ 11:46	1	235	.30	.84	113.61	100	75	245	50
2	11:48	1	235	.30	.84	114.78	100	75	245	50
3	11:50	1	240	.33	.93	115.86	100	75	245	50
4	11:52	1	240	.32	.90	116.92	100	75	245	50
5	11:54	1	240	.23	.65	117.83	100	75	240	50
6	11:56:25	1	240	.20	.56	118.705	100	75	240	50

RAMCON ENVIRONMENTAL CORPORATION

Plant Lee Paving

Location Aberdeen NC
Operator K. Allmandinger
Date 9-28-89
Run No. 3
Sample Box No. 1
Meter Box No. 646882 C-124
Meter H @ 1.53
C Factor 1.011
Pitot Tube Coefficient Cp .781

Ambient Temperature 68
Barometric Pressure 30.16
Assumed Moisture, % 30
Probe Length, ft 32
Nozzle Identification No. .0004909
Avg. Calibrated Nozzle Dia., (in.) .300/.300/.300
Probe Heater Setting 4.5
Leak Rate, m³/min, (cfm) +.008@6"
Probe Liner Material 316 stainless
Static Pressure, mm Hg (in.Hg) .005
Filter No. DA-3602 5558

	IMPINGER VOLUME, ml	SILICA GEL WEIGHT, g
FINAL	536	513
INITIAL	200	501
DIFFERENCE	336	12

Schematic of Stack Cross Section

TRAV. PT NO.	SAMPLING TIME (θ) min.	VACUUM in. Hg	STACK TEMP (T_s) °F	VELOCITY HEAD (P_s) in H20	PRESSURE DIFF. ORF. MTR in H_2O	GAS SAMPLE VOLUME ft³	GAS SAMPLE TEMP. AT DRY GAS METER °F Inlet	Outlet	FILTER HOLDER TEMP °F	GAS TEMP LVG CONDENSER OR LAST IMPINGER °F
A) 1	~~12:18:15~~ 12:20	3	220	.58	1.6	~~118.86~~ 120.42	90	80	230	60
2	12:22	3	240	.58	1.6	121.87	95	80	235	55
3	12:24	3	245	.60	1.7	123.35	100	75	245	55
4	12:26	2.5	245	.43	1.2	124.69	100	75	250	55
5	12:28	3.5	240	.70	2.0	126.32	100	75	250	50
6	12:30:15	3	240	.65	1.8	127.93	105	80	250	50
B) 1	~~12:30:30~~ 12:32	2	235	.30	.84	129.10	100	80	255	50
2	12:34	2	235	.38	1.1	130.34	100	80	255	50
3	12:36	3	230	.60	1.7	131.81	105	80	250	50
4	12:38	4	230	.82	2.3	133.57	105	80	250	50
5	12:40	4	225	.82	2.3	135.33	105	80	245	50
6	12:42:30	4	225	.80	2.2	137.04	110	80	245	50
C) 1	~~12:43~~ 12:45	2.5	230	.55	1.5	138.51	110	80	245	50

Form #REC-06

RAMCON emissions test log sheet, cont. DATE 9-28-89 LOCATION Aberdeen TEST NO. 3

TRAVERSE POINT	SAMPLING TIME θ (min)	VACUUM mm Hg (in. Hg)	STACK TEMP T_s (°F)	VELOCITY HEAD ΔP_s (in. H_2O)	ORFICE DIFF. PRESSURE ΔH (in. H_2O)	GAS VOLUME Vm (ft^3)	GAS SAMPLE TEMP. (°F) in	GAS SAMPLE TEMP. (°F) out	SAMPLE BOX TEMP. (°F)	IMPINGER TEMP (°F)
2	12:47	3	230	.55	1.6	139.92	105	80	245	50
3	12:49	3	230	.65	1.9	141.54	110	80	240	50
4	12:51	4	230	.74	2.2	143.22	110	80	240	50
5	12:53	4	225	.85	2.5	145.06	110	80	240	50
6	12:55	4	225	.85	2.5	146.95	110	80	240	50
D) 1	~~12:55:15~~ 12:57	3.5	225	.67	2.0	148.62	110	80	245	50
2	12:59	3.5	225	.70	2.1	150.34	110	80	245	50
3	1:01	4	225	.73	2.2	151.96	110	80	245	50
4	1:03	4	225	.75	2.2	153.68	110	80	245	50
5	1:05	4	220	.85	2.5	155.52	110	80	245	50
6	1:07:15	4	220	.85	2.5	157.38	110	80	240	50
E) 1	~~1:07:25~~ 1:09	3.5	220	.70	2.1	158.07	110	80	240	50
2	1:11	2	220	.43	1.2	160.41	110	80	240	50
3	1:13	2	220	.35	1.0	161.57	110	80	240	50
4	1:15	2	225	.35	1.0	162.72	110	80	240	50
5	1:17	2	225	.35	1.0	163.88	110	80	240	50
6	1:19:25	2	225	.35	1.0	165.063	110	80	240	50

(31)

IX. CALIBRATION

METER BOX CALIBRATION DATA AND CALCULATION FORM

(English units)

Date 9-30-89 Meter box number 646882 C-124

Barometric pressure, P_b = 30.15 in. Hg Calibrated by [illegible]

Orifice manometer setting (ΔH), in. H_2O	Gas volume: Wet test meter (V_w), ft^3	Gas volume: Dry gas meter (V_d), ft^3	Temperature: Wet test meter (t_w), °F	Temperature: Dry gas meter: Inlet (t_{d_i}), °F	Temperature: Dry gas meter: Outlet (t_{d_o}), °F	Temperature: Dry gas meter: Avg[a] (t_d), °F	Time (Θ), min	Y_i	$\Delta H@_i$ in. H_2O
0.5	15								
1.0	~~105~~	276.54 / 282.181	77	105 / 108	84 / 84	96	8:18	0.995	1.50
1.5	10	265.18 / 275.613	77	110 / 110	84 / 84	97	13:39	0.991	1.52
2.0	10	253.78 / 264.172	77	114 / 111	85 / 85	97.75	11:54	0.995	1.46
3.0	10	243.32 / 252.785	77	112 / 114	84 / 85	98.75	9:36	0.987	1.50
4.0	10								
							Avg	0.992	1.465

ΔH, in. H_2O	$\frac{\Delta H}{13.6}$	$Y_i = \frac{V_w P_b (t_d + 460)}{V_d (P_b + \frac{\Delta H}{13.6})(t + 460)}$	$\Delta H@_i = \frac{0.0317\ \Delta H}{P_b (t_d + 460)} \left[\frac{(t_w + 460)\ \Theta}{V_w}\right]^2$
0.5	0.0368		
1.0	0.0737		
1.5	0.110		
2.0	0.147		
3.0	0.221		
4.0	0.294		

[a] If there is only one thermometer on the dry gas meter, record the temperature under t_d.

Form #REC-02

METER BOX CALIBRATION DATA AND CALCULATION FORM

(English units)

Date 9-5-89 Meter box number 646882 C-124

Barometric pressure, P_b = 30.17 in. Hg Calibrated by [illegible]

Orifice manometer setting (ΔH), in. H_2O	Gas volume: Wet test meter (V_w), ft^3	Gas volume: Dry gas meter (V_d), ft^3	Temperature: Wet test meter (t_w), °F	Temperature: Dry gas meter: Inlet (t_{d_i}), °F	Temperature: Dry gas meter: Outlet (t_{d_o}), °F	Temperature: Dry gas meter: Avg[a] (t_d), °F	Time (Θ), min	Y_i	$\Delta H@_i$ in. H_2O
0.5	5	295.73 / 305.895	77	108 / 108	85 / 85	96.5	11:55	1.002	1.547
1.0	5	279.85 / 284.975	77	111 / 110	86 / 85	98	8:26	1.007	1.544
1.5	10	266.82 / 277.061	77	110 / 112	86 / 86	98.5	13:36	1.019	1.505
2.0	10	255.38 / 265.541	77	112 / 112	85 / 85	98.5	11:51	1.015	1.524
3.0	10								
4.0	10								
							Avg	1.011	1.53

ΔH, in. H_2O	$\frac{\Delta H}{13.6}$	$Y_i = \frac{V_w P_b (t_d + 460)}{V_d (P_b + \frac{\Delta H}{13.6})(t + 460)}$	$\Delta H@_i = \frac{0.0317\ \Delta H}{P_b (t_d + 460)} \left[\frac{(t_w + 460)\ \Theta}{V_w}\right]^2$
0.5	0.0368		
1.0	0.0737		
1.5	0.110		
2.0	0.147		
3.0	0.221		
4.0	0.294		

[a] If there is only one thermometer on the dry gas meter, record the temperature under t_d.

RAMCOR ENVIRONMENTAL CORPORATION

Lear Siegler Stack Sampler

Nozzle Diameter Calibration

Date _____ Signature _____

Nozzle No.	Average Diameter	Nozzle No.	Average Diameter
1		7	
2		8	
3		9	
4		10	
5		11	
6		12	

Pitot Tube Calibration (S Type)

Pitot Tube Identification No. 32 Date 5-6-89

Calibrated by: Sam T. Turner

"A" SIDE CALIBRATION

Run No.	Δp std cm H_2O (in. H_2O)	Δp (s) cm H_2O (in. H_2O)	$C_p(s)$	DEVIATION $C_p(s)-\bar{C}_p(A)$
1	0.98	1.6	.783	<.01
2	0.85	1.4	.779	<.01
3	0.64	1.05	.781	<.01
		$\bar{C}_p$ (SIDE A)	.781	

"B" SIDE CALIBRATION

Run No.	Δp std cm H_2O (in. H_2O)	Δp(s) cm H_2O in. H_2O)	$C_p(s)$	DEVIATION $C_p(s)-\bar{C}_p(B)$
1	0.98	1.6	.783	<.01
2	0.85	1.4	.779	<.01
3	0.64	1.05	.781	<.01
		$\bar{C}_p$ (SIDE B)	.781	

$$\text{AVERAGE DEVIATION} = \sigma(\text{A OR B}) = \frac{\sum_{1}^{3} |C_p(s)-\bar{C}_p(\text{A OR B})|}{3} \leftarrow \text{MUST BE} \leq 0.01$$

$$|\bar{C}_p(\text{SIDE A})-\bar{C}_p(\text{SIDE B})| \leftarrow \text{MUST BE} \leq 0.01$$

$$C_p(s) = C_p(std)\sqrt{\frac{\Delta p\ std}{\Delta p_s}}$$

Form No. EED-17-1

STACK TEMPERATURE SENSOR CALIBRATION DATA FORM

Date 4-5-89 Thermocouple number Hotbox

Ambient temperature 20 °C Barometric pressure 29.88 in. Hg

Calibrator Turner Reference: mercury-in-glass ✓

other _____

Reference point number	Source[a] (specify)	Reference thermometer temperature, °C	Thermocouple potentiometer temperature, °C	Temperature difference,[b] %
A	ice Bath	32	32	0
B	Boiling water	212	212	0
C	Boiling oil	381	381	0
D	Ambient 9-28-89	58	58	0

[a]Type of calibration system used.

[b] $\left[\frac{(\text{ref temp, °C} + 273) - (\text{test thermom temp, °C} + 273)}{\text{ref temp, °C} + 273}\right] 100 \leq 1.5\%$.

STACK TEMPERATURE SENSOR CALIBRATION DATA FORM

Date 5-5-89 Thermocouple number Inlet / Outlet

Ambient temperature 20 °C Barometric pressure 29.88 in. Hg

Calibrator Turner Reference: mercury-in-glass ✓

other _____

Reference point number	Source[a] (specify)	Reference thermometer temperature, °C F	Thermocouple potentiometer temperature, °C F	Temperature difference,[b] %
A	Ice Bath	32	32	0
B	Boiling oil	381	381	0
C	Boiling water	212	212	0
D	ambient 5-26-89	58	58	0

[a]Type of calibration system used.

[b] $\left[\frac{(\text{ref temp, °C} + 273) - (\text{test thermom temp, °C} + 273)}{\text{ref temp, °C} + 273}\right] 100 \leq 1.5\%.$

STACK TEMPERATURE SENSOR CALIBRATION DATA FORM

Date 5-5-89 Thermocouple number 32

Ambient temperature 20 °C Barometric pressure 29.88 in. Hg

Calibrator Turner Reference: mercury-in-glass ✓

other _____

Reference point number	Source[a] (specify)	Reference thermometer temperature, °C	Thermocouple potentiometer temperature, °C	Temperature difference,[b] %
A	ice Bath	32	32	0
B	Boiling water	212	211	.005
C	Boiling oil	381	381	0
D	Ambient 9-28-89	58	58	0

[a]Type of calibration system used.

[b] $\left[\frac{(\text{ref temp, °C} + 273) - (\text{test thermom temp, °C} + 273)}{\text{ref temp, °C} + 273}\right] 100 \leq 1.5\%.$

RAMCON

Lear Siegler Stack Sampler

Heating Probe Calibration

Probe No. 32 Probe Length 3'

Date of Calibration 5-7-89 Signature Sam Turner

Name of Company to be tested _____

Note: 3 ft. probe - 5 min. warmup
6 ft. probe - 15 min. warmup
10 ft. probe - 30 min. warmup
Calibration flow rate = .75 CFM

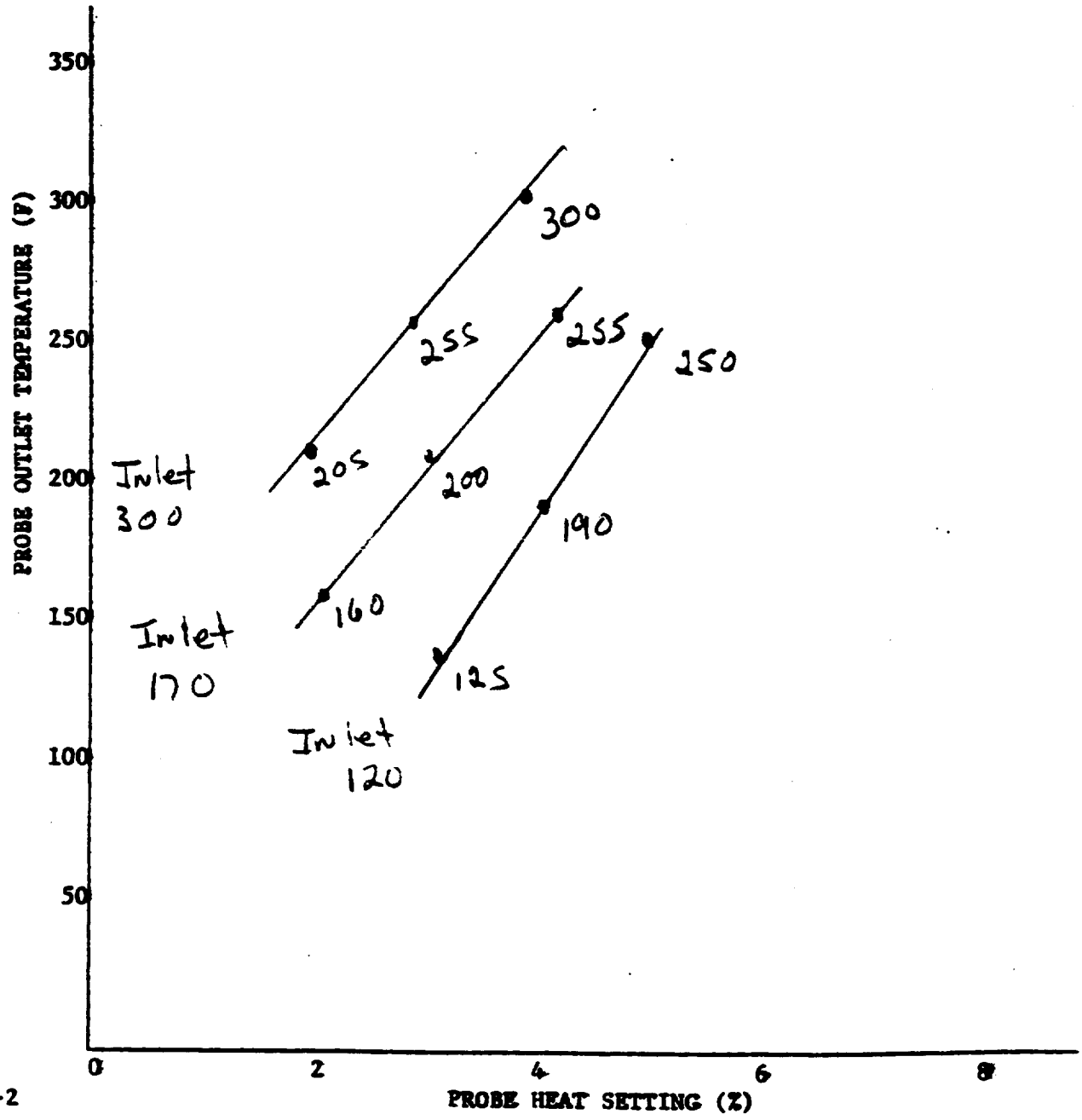

Form No. EED-17-2

X. RAMCON PERSONNEL

RAMCON Environmental Stack Test Team

Sumner Buck - President

Sumner Buck is the President of RAMCON Environmental Corporation. He is a graduate of the EPA 450 "Source Sampling for Particulate Pollutant's" course and the 474 "Continuous Emissions Monitoring" course all given at RTP. Mr. Buck is a certified V.E. reader with current certification. Mr. Buck has personally sampled over 400 stacks including over 300 asphalt plants. He is 47 years old and a graduate of the University of Mississippi with graduate studies at Memphis State University and State Technical Institute of Memphis.

Ken Allmendinger - Field Supervisor

Ken Allmendinger has been employed with RAMCON Environmental for four years. He has personally sampled over 300 asphalt plants and 100 incinerators and boilers. He has extensive training in Methods 1 through 9. He has a current certification as a V.E. reader and has attended several plant manufacturers' schools to understand the stacks he is testing. He has recently been promoted to Field Supervisor and has responsibility for three other stack sampling teams.