Note: This is a reference cited in *AP 42, Compilation of Air Pollutant Emission Factors, Volume I Stationary Point and Area Sources.* AP42 is located on the EPA web site at www.epa.gov/ttn/chief/ap42/

The file name refers to the reference number, the AP42 chapter and section. The file name "ref02_c01s02.pdf" would mean the reference is from AP42 chapter 1 section 2. The reference may be from a previous version of the section and no longer cited. The primary source should always be checked.

Commonwealth of Pennsylvania
Environmental Resources
January 6, 1989

Subject: Source Test Review

To: Data File
New Enterprise Stone and Lime Company, Inc.
Bethel Township, Fulton County

From: John S. Pitulski
Air Quality Program Specialist
Division of Technical Services and Monitoring
Bureau of Air Quality Control

Through: Chief, Source Testing and Monitoring Section

The asphaltic concrete plant operated by New Enterprise Stone and Lime is a portable continuous-mix design manufactured by Astec Industries, Inc. The unit has a maximum rated capacity of 260 tons per hour (ID 2 Top Mix) and is fired on No. 2 fuel oil. Exhaust gases from the operation are controlled by an Astec baghouse collector.

On October 19, 1988 NSPS particulate compliance testing was conducted by Gannett-Fleming, Inc. at the exhaust stack servicing the baghouse. The tests appear to have been conducted in accordance with the applicable methods and are acceptable to the Department.

The following data was extracted from the test report:

Test Run Number	1	2	3
Volumetric Flowrate (dscfm)	26823	28194	26523
Mass Emission Rate (lb/hr)	1.0	1.5	1.3
Particulate Concentration (gr/dscf)	0.0046	0.0064	0.006
Allowable Concentration (gr/dscf)	0.04	0.04	0.04

Environmental Resources
December 07, 1988

SUBJECT: New Enterprise Stone And Lime Company, Inc.
Test Results
Warfordsburg Portable Plant
29-303-006

TO: L. Blaine DeHaven, Chief
Source Test and Monitoring Section
Division of Technical Services and Monitoring

FROM: Ronald M. Davis
Air Pollution Control Engineer
Harrisburg Regional Office

The attached test results are from tests conducted at a portable continuous mix asphaltic concrete plant. The plant is subject to Chapter 123 requirements and Subpart I of the NSPS requirements. Mr. Jaydeb Pal was at the site for one of three test.

Please have the test results reviewed and supply me with any comments. If you have any questions feel free to contact me.

RECEIVED
DEC 7 1988
DER-AIR QUALITY CONTROL
DIV. OF ABATEMENT & COMPLIANCE

GANNETT FLEMING
ENVIRONMENTAL ENGINEERS, INC.

P.O. BOX 1963
HARRISBURG, PA 17105
(717) 763-7211
CABLE ADDRESS: GANFLEC • TELEX 84-2375

November 28, 1988

New Enterprise Stone & Lime Co., Inc.
New Enterprise, PA 16664

Attention: J. Lon Reffner, P.E.

Gentlemen:

In accordance with your written authorization dated June 10, 1988, Gannett Fleming Environmental Engineers, Inc. conducted a state compliance of emissions tests on October 19, 1988 of your Asphalt Batch plant located in Warfordsburg, PA. The tests were conducted in accordance with EPA regulations and PA DER modifications where applicable. We are pleased to submit the report consisting of the following sections:

Section		Page
1	Description of Tests Performed and Test Results Summary	1
2	Sampling Port Locations and Duct Dimensions	4
3	Data Collection Sheets	6
3A	Particulate Computer Run Sheets and Field Data Sheets	7
3B	Summary of Lab Analysis	36
4	Instrument Calibrations	39

DEP
AIR QUALITY CONTROL
DEC 06 1988
HARRISBURG REGION

If you should have any questions concerning these results, please contact us.

Very truly yours,

GANNETT FLEMING ENVIRONMENTAL ENGINEERS, INC.

ROBERT E. SHAFFER, P.E.
Project Manager

RES:NRS:mmb

Enclosures

SECTION 1

DESCRIPTION OF TESTS PERFORMED AND TEST RESULTS SUMMARY

Description of Tests Performed

State compliance tests were conducted for New Enterprise Stone & Lime Co. to obtain an operating permit for their Astec Asphalt Batch Plant, located in Warfordsburg, PA. Upon successfully meeting state compliance, New Enterprise Stone & Lime would be issued an operating permit from the PA DER. Compliance tests were conducted on October 19, 1988. The results of the tests indicate the particulate emissions were below the state allowance emission standard of .04 gr/dscf (see summary on next page).

Mr. Nete Stauffer and Mr. Brian Schneffler of Garnett Fleming conducted the compliance tests. Mr. Jay Deb Pal of the PA DER observed the compliance tests.

Visible emissions were not conducted during the compliance test. The visible emission will be conducted at a later date (as per prior arrangements with Mr. Ron Davis of the PA DER) and added to report as an attachment.

Connelly Fleming
ENVIRONMENTAL ENGINEERS, INC.

DATA SUMMARY SHEET

PLANT NAME: New Enterprise Stone & Lime

LOCATION: Warfordsburg, PA 8:05-9:30 AM 10:30-12:15 PM 1:45-3:20 PM

OUTLET	DESIGN	TEST 1	TEST 2	TEST 3	AVERAGE
DATE		10-19-88	10-19-88	10-19-88	
VOLUME ACFM		43584	45244	41996	
VOLUME SCFM		32053	33459	31439	
VOLUME DSCFM		26823	28194	26523	
TEMPERATURE °F		265	261	252	
MOISTURE %		16.3	15.7	15.7	
DUST CONCENTRATION GR/ACF		.003	.004	.004	
DUST CONCENTRATION GR/SCF		.004	.005	.005	
DUST CONCENTRATION GR/DSCF	.04	.004	.006	.006	
DUST CONCENTRATION GR/DSCF ※		.....	.....	.....	
DUST EMISSION LBS/HR.		1.0	1.5	1.3	
EMISSION RATE LBS/MBTU		.....	.....	.....	
FEED RATE		.....	.....	.....	
CO_2 %		2.5	3.5	3.9	
O_2 %		17.9	16.4	16.5	
CO %		0	0	0	
EXCESS AIR %		.....	.....	.....	
BTU/LB		.....	.....	.....	
ISOKINETICS	100± 10%	105.6	100.6	99.6	

※ CORRECTED TO 12% CO_2

SECTION 2

SAMPLING PORT LOCATIONS AND DUCT DIMENSIONS

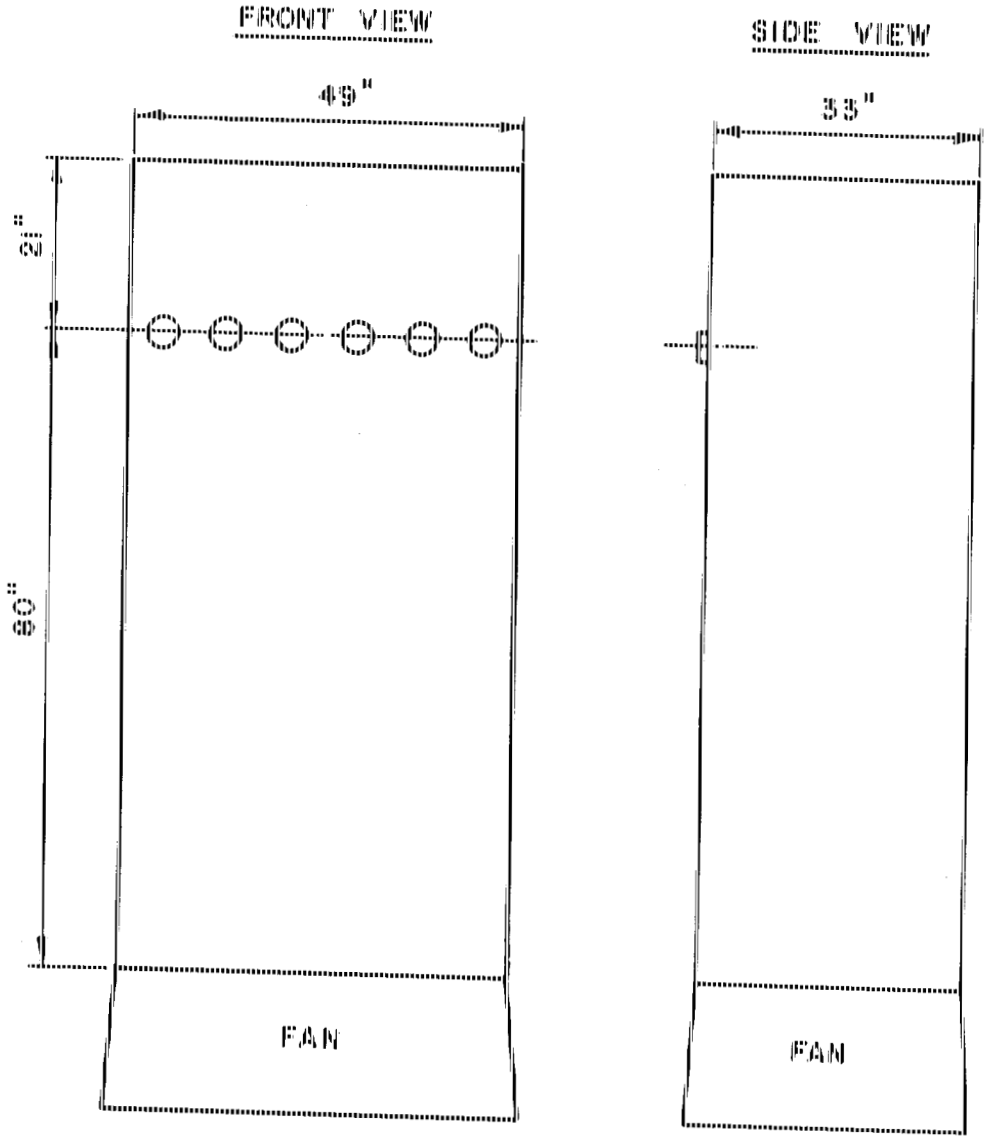

6 PORTS
5 POINTS/PORT
30 TOTAL SAMPLING POINTS

GANNETT FLEMING ENVIRONMENTAL ENGINEERS, INC. P.O. BOX 1963 HARRISBURG, PA 17105	NEW ENTERPRISE STONE & LIME CO., INC. WARFORDSBURG, PA		
	DATE: 11-4-88 SCALE	DRAWN BY E.E.B.	DRAWING NUMBER

SECTION 3

DATA COLLECTION SHEETS

SECTION 3A

PARTICULATE COMPUTER RUN SHEETS AND FIELD DATA SHEETS

09-Nov-88

E.P.A. METHOD 5 CALCULATION

JOB IDENTIFICATION

Client: NEW ENTERPRISE S&L
Run No.: NESL-1
Date: 10/19/88

TOTAL GAS VOLUME	Vm=	50.175 cu.ft.
TOTAL WATER VOLUME	Vh2o=	218 ml
GAS METER TEMPERATURE	Tm=	56 deg.F
BAROMETRIC PRESSURE	BP=	30.12 "Hg
METER PRESSURE (dH ACTUAL)	Pm=	0.13 "Hg
STATIC PRESSURE	Ps=	-0.02 "Hg
STACK TEMPERATURE	Ts=	265 deg.F
METER ERROR RATIO	Y=	1.01
DUCT AREA	Ad=	11.23 sq.ft.
SQUARE ROOT OF VELOCITY PRESSURE	sq.rt.VP=	0.959
PITOT TUBE CONSTANT TYPE "S" = 0.84 OR AS CALIBRATED	PC=	0.84
PARTICULATE WEIGHT	Wp=	0.0149 gr
NOZZLE DIAMETER	Dn=	0.225 In.
TOTAL SAMPLING TIME	T=	75 min.

GAS COMPOSITION:

PERCENT OXYGEN	O2=	17.9 % dry
PERCENT CARBON DIOXIDE	CO2=	2.5 %dry
PERCENT CARBON MONOXIDE	CO=	0 %dry

NEW ENTERPRISE S&L Run No. NESL-1 10/19/86 09-Nov-88

VOLUME SAMPLED AT STP., Vstp, DSCF

$$Vstp = Vm * Y * \frac{530}{460 + Tm} * \frac{BP+Pm}{29.92}$$

$$Vstp = (50.175) * (1.01) * \frac{530}{516} * \frac{30.25}{29.92}$$

Vstp = 52.626 DSCF

EQUIVALENT VAPOR VOLUME OF TOTAL CONDENSATE, Veq/STP, SCF

Veq/STP = 0.04707 * Vh2o

Veq/STP= 0.04707 * (218)

Veq/STP = 10.26 SCF

VOLUME PERCENT WATER VAPOR AT STP, h2o, %

$$h2o = \frac{Veq/STP}{Veq/STP + Vstp} * 100$$

$$h2o = \frac{10.26}{10.26 + 52.626} *100$$

h2o = 16.31 %

NEW ENTERPRISE S&L Run No. NESL-1 10/19/88 09-Nov-88

VOLUME SAMPLED AT DUCT CONDITIONS, V1,(ACF)

$$V1 = (Vstp + Vsq/STP) * \frac{460 + Ts}{530} * \frac{29.92}{BP + Ps}$$

$$V1 = (52.626 + 10.26) * \frac{725}{530} * \frac{29.92}{30.1}$$

V1 = 85.51

PERCENT NITROGEN, N2,%

N2 = 100 - (O2 + CO2 +CO)

N2 = 100 -(17.9 + 2.5 + 0)

N2 = 79.6 %

DRY MOLE FRACTION OF FLUE GAS

MFD = 1 -(h2o / 100)

MFD = 1 -(16.3 / 100)

MFD = 0.837

DRY MOLECULAR WEIGHT OF FLUE GAS

Md = (%CO2 * 0.44) + (%O2 * 0.32) + (%CO+N2 * 0.28)

Md = (2.5 * 0.44)+(17.9 * 0.32) + (79 * 0.28)

Md = 29.12 = lb./lb.-mole

WET MOLECULAR WEIGHT OF FLUE GAS

MW =(Md * Mfd) + (0.18 * %H2O)

MW = (29.12 * 0.837)+(0.18 * 16.32)

MW = 27.30 =lb./lb.-mole

NEW ENTERPRISE S&L Run No. NESL-1 10/19/88 09-Nov-88

GAS VELOCITY, VS, FPS

$$VS = 85.49 * PC * sq.rt.VP * \sqrt{(460 + ts)/(BP+PS)*MW}$$

$$VS = 85.49 * 0.84 * 0.959 * \sqrt{\frac{725}{821.796}}$$

VS = 64.684

VOLUMETRIC FLOW RATE AT ACTUAL CONDITIONS, VFR, ACFM

VFR = 60 * VS * AD

VFR = 60 * 64.684 * 11.23

VFR = 43584

VOLUMETRIC FLOW RATE AT STANDARD CONDITIONS, VFR/STP, SCFM

$$VFR/STP = VFR * \frac{530}{460+TS} * \frac{BP + PS}{29.92}$$

$$VFR/STP = 43584.40 \frac{530}{725} * \frac{30.1}{29.92}$$

VFR/STP = 32053

VOLUMETRIC FLOW RATE AT DRY STANDARD CONDITIONS, VFR/DSTP, DSCFM

$$VFR/DSTP = VFR/STP * \frac{100 - H2O}{100}$$

VFR/DSTP= 26823

PERCENT EXCESS AIR

$$\%EA = \frac{\%O2 - (0.5 * \%CO)}{(0.264 * \%N2) - (\%O2 - (0.5 * \%CO))} * 100$$

$$\%EA = \frac{17.9 - (0.5 * 0)}{(0.264 * 0) - (0.5 * 0)} * 100$$

%EA = 574.7

NEW ENTERPRISE S&L Run No. NESL-1 10/19/88 09-Nov-88

DUST CONCENTRATION AT DRY STANDARD CONDITIONS, DC/DSTP, gr/DSCF

$$DC/DSTP = \frac{15.43 * WP}{VSTP}$$

$$DC/DSTP = \frac{15.43 * 0.0149}{52.626}$$

DC/DSTP = 0.004

DUST CONCENTRATION AT STANDARD CONDITIONS, DC/STP, gr/SCF

$$DC/STP = \frac{15.43 * WP}{VSTP + VEQ/STP}$$

$$DC/STP = \frac{15.43 * 0.0149}{52.626 + 10.26}$$

DC/STP = 0.004

DUST CONCENTRATIONS AT ACTUAL CONDITIONS, DCA, gr/ACF

$$DCA = \frac{15.43 * WP}{V1}$$

$$DCA = \frac{15.43 * 0.0149}{85.51}$$

DCA = 0.003

MASS EMISSIONS, DQ, lbs./hr.

$$DQ = \frac{60 * DCA * VFR}{7000}$$

$$DQ = \frac{60 * 0.003 * 43584}{7000}$$

DQ = 1.004

NEW ENTERPRISE S&L Run No. NESL-1 10/19/88 09-Nov-88

NOZZLE AREA, An, ft2

$$An = \left[\frac{Dn}{24}\right]^2 * \pi$$

$$An = \left[\frac{0.225}{24}\right]^2 * 3.1415927$$

$$An = 0.000276$$

ISOKINETIC VARIANCE, I, %

$$I = \frac{100 * (TS + 460) * \left[0.002669 * VH2O + \left[\frac{Vm}{(460 + Tm)} * (BP + Pm)\right]\right]}{60 * T * VS * (BP+Ps) * An}$$

$$I = \frac{100*(265+460)*\left[0.002669 * 218 + \left[\frac{50.175}{460+56}*(30.12+0.13)\right]\right]}{60 * 75 * 64.684 * 30.1 * 0.000276}$$

$$I = 105.6\ \%$$

10-Nov-88

E.P.A. METHOD 5 CALCULATION

JOB IDENTIFICATION	Client:	NEW ENTERPRISE S&L
	Run No.:	NESL-2
	Date:	10/19/88
TOTAL GAS VOLUME	Vm=	51.511 cu.ft.
TOTAL WATER VOLUME	Vh2o=	209 ml
GAS METER TEMPERATURE	Tm=	69 deg.F
BAROMETRIC PRESSURE	BP=	30.12 "Hg
METER PRESSURE (dH ACTUAL)	Pm=	0.12 "Hg
STATIC PRESSURE	Ps=	-0.02 "Hg
STACK TEMPERATURE	Ts=	261 deg.F
METER ERROR RATIO	Y=	1.01
DUCT AREA	Ad=	11.23 sq.ft.
SQUARE ROOT OF VELOCITY PRESSURE	sq.rt.VP=	1.001
PITOT TUBE CONSTANT TYPE "S" = 0.84 OR AS CALIBRATED	PC=	0.84
PARTICULATE WEIGHT	Wp=	0.0218 g
NOZZLE DIAMETER	Dn=	0.225 In.
TOTAL SAMPLING TIME	T=	75 min.
GAS COMPOSITION:		
PERCENT OXYGEN	O2=	16.4 % dry
PERCENT CARBON DIOXIDE	CO2=	3.5 %dry
PERCENT CARBON MONOXIDE	CO=	0 %dry

NEW ENTERPRISE S&L Run No. NESL-2 10/19/88 10-Nov-88

VOLUME SAMPLED AT STP., Vstp, DSCF

$$Vstp = Vm * Y * \frac{530}{460 + Tm} * \frac{BP+Pm}{29.92}$$

$$Vstp = (51.511) * (1.01) * \frac{530}{529} * \frac{30.24}{29.92}$$

Vstp = 52.682 DSCF

EQUIVALENT VAPOR VOLUME OF TOTAL CONDENSATE, Veq/STP, SCF

Veq/STP = 0.04707 * Vh2o

Veq/STP= 0.04707 * (209)

Veq/STP = 9.84 SCF

VOLUME PERCENT WATER VAPOR AT STP, h2O, %

$$h2O = \frac{Veq/STP}{Veq/STP + Vstp} * 100$$

$$h2O = \frac{9.84}{9.84 + 52.682} *100$$

h2o = 15.73 %

NEW ENTERPRISE S&L Run No. NESL-2 10/19/88 10-Nov-88

VOLUME SAMPLED AT DUCT CONDITIONS, V1, (ACF)

$$V1 = (Vstp + Veq/STP) * \frac{460 + Ts}{530} * \frac{29.92}{BP + Ps}$$

$$V1 = (52.682 + 9.84) * \frac{721}{530} * \frac{29.92}{30.1}$$

V1 = 84.54

PERCENT NITROGEN, N2,%

N2 = 100 - (O2 + CO2 +CO)

N2 = 100 -(16.4 + 3.5 + 0)

N2 = 80.1 %

DRY MOLE FRACTION OF FLUE GAS

MFD = 1 -(h2o / 100)

MFD = 1 -(15.7 / 100)

MFD = 0.843

DRY MOLECULAR WEIGHT OF FLUE GAS

Md = (%CO2 * 0.44) + (%O2 * 0.32) + (%CO+N2 * 0.28)

Md = (3.5 * 0.44)+(16.4 * 0.32) + (80 * 0.28)

Md = 29.22 = lb./lb.-mole

WET MOLECULAR WEIGHT OF FLUE GAS

MW =(Md * Mfd) + (0.18 * %H2O)

MW = (29.22 * 0.843)+(0.18 * 15.74)

MW = 27.45 =lb./lb.-mole

NEW ENTERPRISE S&L Run No. NESL-2 10/19/88 10-Nov-88

GAS VELOCITY, VS, FPS

$$VS = 85.49 * PC * sq.rt.VP * \sqrt{(460 + ts)/(BP+PS)*MW}$$

$$VS = 85.49 * 0.84 * 1.001 * \sqrt{\frac{721}{826.279}}$$

VS = 67.148

VOLUMETRIC FLOW RATE AT ACTUAL CONDITIONS,VFR,ACFM

VFR = 60 * VS * AD

VFR = 60 * 67.148 * 11.23

VFR = 45244

VOLUMETRIC FLOW RATE AT STANDARD CONDITIONS, VFR/STP,SCFM

$$VFR/STP = VFR * \frac{530}{460+TS} * \frac{BP + PS}{29.92}$$

$$VFR/STP = 45244.30 \frac{530}{721} * \frac{30.1}{29.92}$$

VFR/STP = 33459

VOLUMETRIC FLOW RATE AT DRY STANDARD CONDITIONS,VFR/DSTP,DSCFM

$$VFR/DSTP = VFR/STP * \frac{100 - H2O}{100}$$

VFR/DSTP= 28194

PERCENT EXCESS AIR

$$\%EA = \frac{\%O2 - (0.5 * \%CO)}{(0.264 * \%N2) - (\%O2 - (0.5 * \%CO))} * 100$$

$$\%EA = \frac{16.4 - (0.5 * 0)}{(0.264 * 0) - (0.5 * 0)} * 100$$

%EA = 345.5

NEW ENTERPRISE S&L Run No. NESL-2 10/19/88 10-Nov-88

DUST CONCENTRATION AT DRY STANDARD CONDITIONS, DC/DSTP, gr/DSCF

$$DC/DSTP = \frac{15.43 * WP}{VSTP}$$

$$DC/DSTP = \frac{15.43 * 0.0218}{52.682}$$

DC/DSTP = 0.006

DUST CONCENTRATION AT STANDARD CONDITIONS, DC/STP, gr/SCF

$$DC/STP = \frac{15.43 * WP}{VSTP + VEQ/STP}$$

$$DC/STP = \frac{15.43 * 0.0218}{52.682 + 9.84}$$

DC/STP = 0.005

DUST CONCENTRATIONS AT ACTUAL CONDITIONS, DCA, gr/ACF

$$DCA = \frac{15.43 * WP}{V1}$$

$$DCA = \frac{15.43 * 0.0218}{84.54}$$

DCA= 0.004

MASS EMISSIONS, DQ, lbs./hr.

$$DQ = \frac{60 * DCA * VFR}{7000}$$

$$DQ = \frac{60 * 0.004 * 45244}{7000}$$

DQ= 1.543

NEW ENTERPRISE S&L Run No. NESL-2 10/19/88

10-Nov-88

NOZZLE AREA, An, ft.2

$$An = \left[\frac{Dn}{24}\right]^2 * \pi$$

$$An = \left[\frac{0.225}{24}\right]^2 * 3.1415927$$

$$An = 0.000276$$

ISOKINETIC VARIANCE, I, %

$$I = \frac{100 * (TS + 460) * \left[0.002669 * VH2O + \left[\frac{Vm}{(460 + Tm)} * (BP + Pm)\right]\right]}{60 * T * VS * (BP+Ps) * An}$$

$$I = \frac{100*(261+460)*\left[0.002669 * 209 + \left[\frac{51.511}{460+69}*(30.12+0.12)\right]\right]}{60 * 75 * 67.148 * 30.1 * 0.000276}$$

$$I = 100.6\ \%$$

09-Nov-88

E.P.A. METHOD 5 CALCULATION

JOB IDENTIFICATION	Client:	NEW ENTERPRISE S&L
	Run No.:	NESL-3
	Date:	10/19/88
TOTAL GAS VOLUME	Vm=	57.406 cu.ft.
TOTAL WATER VOLUME	Vh2o=	232 ml
GAS METER TEMPERATURE	Tm=	67 deg.F
BAROMETRIC PRESSURE	BP=	30.12 "Hg
METER PRESSURE (dH ACTUAL)	Pm=	0.11 "Hg
STATIC PRESSURE	Ps=	-0.03 "Hg
STACK TEMPERATURE	Ts=	252 deg.F
METER ERROR RATIO	Y=	1.01
DUCT AREA	Ad=	11.23 sq.ft.
SQUARE ROOT OF VELOCITY PRESSURE	sq.rt.VP=	0.936
PITOT TUBE CONSTANT TYPE "S" = 0.84 OR AS CALIBRATED	PC=	0.84
PARTICULATE WEIGHT	Wp=	0.0216 g
NOZZLE DIAMETER	Dn=	0.225 In.
TOTAL SAMPLING TIME	T=	90 min.
GAS COMPOSITION:		
PERCENT OXYGEN	O2=	16.5 % dry
PERCENT CARBON DIOXIDE	CO2=	3.9 %dry
PERCENT CARBON MONOXIDE	CO=	0 %dry

NEW ENTERPRISE S&L Run No. NESL-3 10/19/88 09-Nov-88

VOLUME SAMPLED AT STP., Vstp, DSCF

$$Vstp = Vm * Y * \frac{530}{460 + Tm} * \frac{BP+Pm}{29.92}$$

$$Vstp = (\quad 57.406) * (\quad 1.01) * \frac{530}{527} * \frac{30.23}{29.92}$$

Vstp = 58.914 DSCF

EQUIVALENT VAPOR VOLUME OF TOTAL CONDENSATE, Veq/STP, SCF

Veq/STP = 0.04707 * Vh2o

Veq/STP= 0.04707 * (232)

Veq/STP = 10.92 SCF

VOLUME PERCENT WATER VAPOR AT STP, h2O, %

$$h2O = \frac{Veq/STP}{Veq/STP + Vstp} * 100$$

$$h2O = \frac{10.92}{10.92 + 58.914} * 100$$

h2o = 15.63 %

NEW ENTERPRISE S&L Run No. NESL-3 10/19/88 09-Nov-88

VOLUME SAMPLED AT DUCT CONDITIONS, V1,(ACF)

$$V1 = (Vstp + Veq/STP) * \frac{460 + Ts}{530} * \frac{29.92}{BP + Ps}$$

$$V1 = (58.914 + 10.92) * \frac{712}{530} * \frac{29.92}{30.08}$$

V1 = 93.29

PERCENT NITROGEN, N2,%

N2 = 100 - (O2 + CO2 +CO)

N2 = 100 -(16.5 + 3.9 + 0)

N2 = 79.6 %

DRY MOLE FRACTION OF FLUE GAS

MFD = 1 -(h2o / 100)

MFD = 1 -(15.6 / 100)

MFD = 0.844

DRY MOLECULAR WEIGHT OF FLUE GAS

Md = (%CO2 * 0.44) + (%O2 * 0.32) + (%CO+N2 * 0.28)

Md = (3.9 * 0.44)+(16.5 * 0.32) + (79 * 0.28)

Md = 29.28 = lb./lb.-mole

WET MOLECULAR WEIGHT OF FLUE GAS

MW =(Md * Mfd) + (0.18 * %H2O)

MW = (29.28 * 0.844)+(0.18 * 15.64)

MW = 27.52 =lb./lb.-mole

NEW ENTERPRISE S&L Run No. NESL-3 10/19/86 09-Nov-86

GAS VELOCITY, VS, FPS

$$VS = 85.49 * PC * sq.rt.VP * \sqrt{(460 + ts)/(BP+PS)*MW}$$

$$VS = 85.49 * 0.84 * 0.936 * \sqrt{\frac{712}{828.061}}$$

$$VS = 62.327$$

VOLUMETRIC FLOW RATE AT ACTUAL CONDITIONS, VFR, ACFM

$$VFR = 60 * VS * AD$$

$$VFR = 60 * 62.327 * 11.23$$

$$VFR = 41996$$

VOLUMETRIC FLOW RATE AT STANDARD CONDITIONS, VFR/STP, SCFM

$$VFR/STP = VFR * \frac{530}{460+TS} * \frac{BP + PS}{29.92}$$

$$VFR/STP = 41996.22 \frac{530}{712} * \frac{30.09}{29.92}$$

$$VFR/STP = 31439$$

VOLUMETRIC FLOW RATE AT DRY STANDARD CONDITIONS, VFR/DSTP, DSCFM

$$VFR/DSTP = VFR/STP * \frac{100 - H2O}{100}$$

$$VFR/DSTP = 26523$$

PERCENT EXCESS AIR

$$\%EA = \frac{\%O2 - (0.5 * \%CO)}{(0.264 * \%N2) - (\%O2 - (0.5 * \%CO))} * 100$$

$$\%EA = \frac{16.5 - (0.5 * 0)}{(0.264 * 0) - (0.5 * 0)} * 100$$

$$\%EA = 365.5$$

NEW ENTERPRISE S&L Run No. NESL-3 10/19/88 09-Nov-88

DUST CONCENTRATION AT DRY STANDARD CONDITIONS, DC/DSTP, gr/DSCF

$$DC/DSTP = \frac{15.43 * WP}{VSTP}$$

$$DC/DSTP = \frac{15.43 * 0.0216}{58.914}$$

DC/DSTP = 0.006

DUST CONCENTRATION AT STANDARD CONDITIONS, DC/STP, gr/SCF

$$DC/STP = \frac{15.43 * WP}{VSTP + VEQ/STP}$$

$$DC/STP = \frac{15.43 * 0.0216}{58.914 + 10.92}$$

DC/STP = 0.005

DUST CONCENTRATIONS AT ACTUAL CONDITIONS, DCA, gr/ACF

$$DCA = \frac{15.43 * WP}{V1}$$

$$DCA = \frac{15.43 * 0.0216}{93.29}$$

DCA= 0.004

MASS EMISSIONS, DQ, lbs./hr.

$$DQ = \frac{60 * DCA * VFR}{7000}$$

$$DQ = \frac{60 * 0.004 * 41996}{7000}$$

DQ= 1.286

NEW ENTERPRISE S&L Run No. NES&L-3 10/19/86 09-Nov-86

NOZZLE AREA, An, ft2

$$An = \left[\frac{Dn}{24}\right]^2 * \pi$$

$$An = \left[\frac{0.225}{24}\right]^2 * 3.1415927$$

$$An = 0.000276$$

ISOKINETIC VARIANCE, I, %

$$I = \frac{100 * (TS + 460) * \left[0.002669 * VH2O + \left[\frac{Vm}{(460 + Tm)} * (BP + Pm)\right]\right]}{60 * T * VS * (BP+Ps) * An}$$

$$I = \frac{100*(252 + 460)* \left[0.002669 * 232 + \left[\frac{57.406}{460+67} *(30.12 + 0.11)\right]\right]}{60 * 90 * 62.327 * 30.09 * 0.000276}$$

$$I = 99.6\ \%$$

Preliminary Field Data

PLANT NAME New Enterprise Stone & Lime

LOCATION Warfordsburg, PA

SAMPLING LOCATION Stack

DUCT DEPTH

FROM INSIDE FAR WALL TO OUTSIDE OF PORT 37"

NIPPLE LENGTH 4"

DEPTH OF DUCT 33"

WIDTH (RECTANGULAR DUCT) 49"

EQUIVALENT DIAMETER:

$$D_E = \frac{2 \times \text{DEPTH} \times \text{WIDTH}}{\text{DEPTH} + \text{WIDTH}} = \frac{2(\quad)(\quad)}{(\quad + \quad)} = \_\_\_\_$$

DISTANCE FROM PORTS TO NEAREST FLOW DISTURBANCE:	UPSTREAM	DOWNSTREAM
FEET	21"	80"
STACK DIAMETERS		

STACK AREA = 49" x 33" = 1617 IN^2

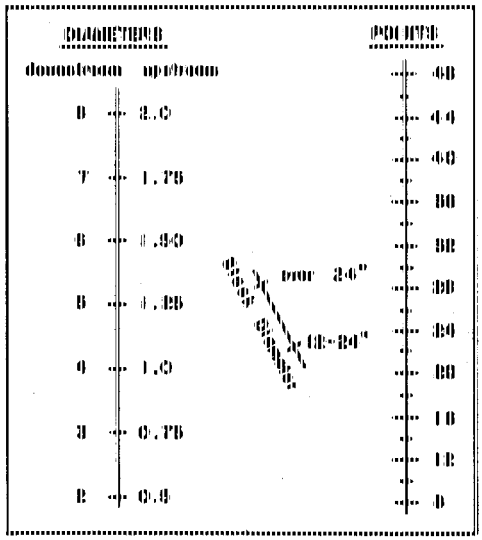

Port	% of Diameter	Distance from inside wall	Distance from outside of port
1	10	3.3	7.3
2	30	9.9	13.9
3	50	16.5	20.5
4	70	23.1	27.1
5	90	29.7	33.7
6			
7			
8			
9			
10			
11			
12			
13			
14			
15			
16			
17			
18			
19			
20			
21			
22			
23			
24			

LOCATION OF TRAVERSE POINTS IN CIRCULAR STACKS

	4	6	8	10	12	14	16	18	20	22	24
1	6.7	4.4	3.2	2.6	2.1	1.8	1.6	1.4	1.3	1.1	1.1
2	29.6	14.6	10.5	8.2	6.7	5.7	4.9	4.4	3.9	3.5	3.2
3	75.0	29.6	19.4	14.6	11.8	9.9	8.4	7.3	6.7	6.0	5.5
4	93.3	70.4	32.3	22.6	17.7	14.6	12.5	10.9	9.7	8.7	7.9
5		85.4	67.7	34.2	25.0	20.1	16.9	14.6	12.9	11.6	10.5
6		93.3	80.6	65.8	38.6	26.9	22.0	18.8	16.5	14.6	13.2
7			89.3	77.4	64.6	38.8	28.3	23.6	20.4	18.0	16.1
8			96.8	85.4	75.0	63.4	37.5	29.6	25.0	21.8	19.4
9				91.8	82.3	75.1	62.5	50.2	38.6	26.2	23.0
10				97.4	88.2	79.9	71.7	61.8	50.0	38.3	27.2
11					93.3	85.4	78.0	70.4	61.2	50.3	38.3
12					97.9	90.1	83.1	76.4	69.4	60.7	50.0
13						94.3	87.8	81.2	75.0	68.5	60.2
14						98.2	91.5	85.4	79.6	73.8	67.7
15							95.1	89.1	83.8	78.2	72.8
16							98.4	92.5	87.1	82.0	77.0
17								95.6	90.3	85.4	80.6
18								98.6	93.3	88.4	83.9
19									96.1	91.3	86.8
20									98.7	94.0	89.5
21										96.4	92.1
22										98.9	94.5
23											96.6
24											98.9

LOCATION OF TRAVERSE POINTS IN RECTANGULAR STACKS

	1	2	4	5	6	7	8	9	10	11	12
1	16.6	16.7	12.5	12.5	8.3	7.1	6.3	5.6	5.0	4.5	4.2
2	75.0	50.0	37.5	30.0	25.0	21.4	18.8	16.7	15.0	13.6	12.5
3		83.3	62.5	50.0	41.7	35.7	31.3	27.8	25.0	22.7	20.8
4			87.5	70.0	58.3	50.0	43.8	38.9	35.0	31.8	29.2
5				80.0	75.0	64.3	56.3	50.0	45.0	40.9	37.5
6					91.7	78.6	68.8	61.1	55.0	50.0	45.8
7						92.9	81.3	72.2	65.0	59.1	54.2
8							93.8	83.3	75.0	68.2	62.5
9								94.4	85.0	77.3	70.8
10									95.0	86.4	79.2
11										95.5	87.5
12											95.8

GANNETT FLEMING ENVIRONMENTAL ENGINEERS, INC.

PARTICULATE FIELD DATA

SCHEMATIC OF STACK

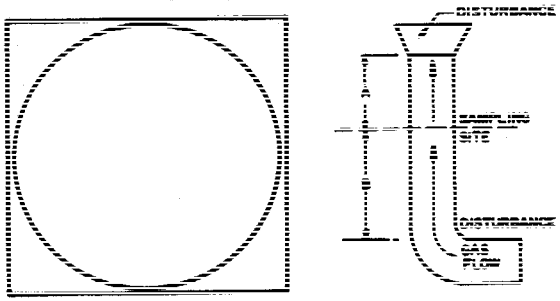

CROSS SECTION

PLANT NESHL
DATE 10-17-88
LOCATION STACK
OPERATOR NN
STACK NO.
RUN NO. UBL-TRAV
SAMPLE BOX NO.
Y FACTOR

AMBIENT TEMPERATURE
BAROMETRIC PRESSURE
ASSUMED MOISTURE, %
PROBE LENGTH, in
NOZZLE DIAMETER, in
STACK DIAMETER, in
NOZZLE I.D.
PITOT CONSTANT .84

METER ΔH @
c FACTOR
PROBE OR PITOT I.D.

WEIGHT OF PARTICULATE COLLECTED, mg		
SAMPLE	FILTER	PROBE WASH
FINAL WEIGHT		
TARE WEIGHT		
WEIGHT GAIN		
CONTAINER NUMBER	TOTAL	

TRAVERSE POINT NUMBER	SAMPLING TIME (θ) min.	(P_s) STATIC PRESSURE (in. H_2O) NEG	STACK TEMPERATURE (T_s) °F	VELOCITY HEAD (ΔP_s)	VELOCITY HEAD ($\sqrt{\Delta P_s}$)	PRESSURE DIFFERENTIAL ACROSS ORIFICE METER (ΔH) in. H_2O ACTUAL	PRESSURE DIFFERENTIAL ACROSS ORIFICE METER (ΔH) in. H_2O DESIRED	GAS SAMPLE VOLUME (V_m), ft³	GAS SAMPLE TEMPERATURE AT DRY GAS METER INLET ($T_{m_{in}}$), °F	GAS SAMPLE TEMPERATURE AT DRY GAS METER OUTLET ($T_{m_{out}}$), °F	SAMPLE BOX TEMPERATURE °F	TEMPERATURE OF GAS LEAVING CONDENSER OR LAST IMPINGER °F	PUMP VACUUM in. Hg gauge	VELOCITY fps
A5		.7	254	1.50										
4		—	256	1.90										
3		.5	249	.90										
2		—	253	.79										
1		.5	248	.61										
B5		—	254	2.30										
4		.6	250	2.15										
3		—	248	1.40										
2		.4	251	.91										
1		—	252	.84										
C5		.3	251	1.60										
4		—	252	1.60										
3		.3	256	1.20										
2		—	249	.81										
1		.3	251	.43										
TOTAL														
AVERAGE														

LEAK RATE, cfm

VOLUME OF LIQUID WATER COLLECTED	IMPINGER VOLUME ml 1	2	3	4	SILICA GEL WEIGHT g
FINAL					
INITIAL					
LIQUID COLLECTED					
TOTAL VOLUME COLLECTED					

ORSAT MEASUREMENT	TIME	CO_2	O_2	CO	N_2
1					
2					
3					
AVG.					

COMMENTS:

Page 2 of 2

GANNETT FLEMING ENVIRONMENTAL ENGINEERS, INC.

PARTICULATE FIELD DATA

SCHEMATIC OF STACK

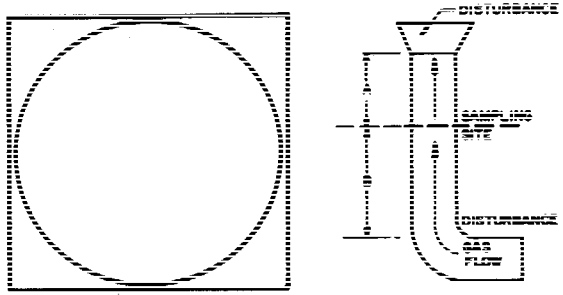

CROSS SECTION

PLANT NESHL
DATE 10-17-84
LOCATION
OPERATOR
STACK NO.
RUN NO.
SAMPLE BOX NO.
Y FACTOR

AMBIENT TEMPERATURE
BAROMETRIC PRESSURE
ASSUMED MOISTURE, %
PROBE LENGTH, in
NOZZLE DIAMETER, in
STACK DIAMETER, in
NOZZLE I.D.
PITOT CONSTANT

METER ΔH @
c FACTOR
PROBE OR PITOT I.D.

WEIGHT OF PARTICULATE COLLECTED, mg		
SAMPLE	FILTER	PROBE WASH
FINAL WEIGHT		
TARE WEIGHT		
WEIGHT GAIN		
CONTAINER NUMBER	TOTAL	

TRAVERSE POINT NUMBER	SAMPLING TIME (θ) min	(P_s) STATIC PRESSURE (in. H_2O) NEG	STACK TEMPERATURE (T_s) °F	VELOCITY HEAD (ΔP_s)	VELOCITY HEAD ($\sqrt{\Delta P_s}$)	PRESSURE DIFFERENTIAL ACROSS ORIFICE METER (ΔH) in. H_2O ACTUAL	PRESSURE DIFFERENTIAL ACROSS ORIFICE METER (ΔH) in. H_2O DESIRED	GAS SAMPLE VOLUME (V_m), ft³	GAS SAMPLE TEMPERATURE AT DRY GAS METER INLET ($T_{m_{in}}$), °F	GAS SAMPLE TEMPERATURE AT DRY GAS METER OUTLET ($T_{m_{out}}$), °F	SAMPLE BOX TEMPERATURE °F	TEMPERATURE OF GAS LEAVING CONDENSER OR LAST IMPINGER °F	PUMP VACUUM in. Hg gauge	VELOCITY fps
D5		.8	252	1.60										
4		—	256	1.20										
3		.7	257	.91										
2		—	257	.61										
1		.3	249	.23										
E5		—	250	1.60										
4		.6	252	1.10										
3		—	256	.88										
2		.5	255	.36										
1		—	253	.34										
F5		.4	252	1.30										
4		—	253	1.45										
3		.6	250	.28										
2		—	249	.17										
1		.4	248	.14										
TOTAL														
AVERAGE														

LEAK RATE, cfm

VOLUME OF LIQUID WATER COLLECTED	IMPINGER VOLUME ml 1	2	3	4	SILICA GEL WEIGHT g	ORSAT MEASUREMENT	TIME	CO_2	O_2	CO	N_2
FINAL						1					
INITIAL						2					
LIQUID COLLECTED						3					
TOTAL VOLUME COLLECTED						AVG.					

COMMENTS:

GANNETT FLEMING ENVIRONMENTAL ENGINEERS, INC.

PARTICULATE FIELD DATA

ASTEC CHAR TEST

SCHEMATIC OF STACK

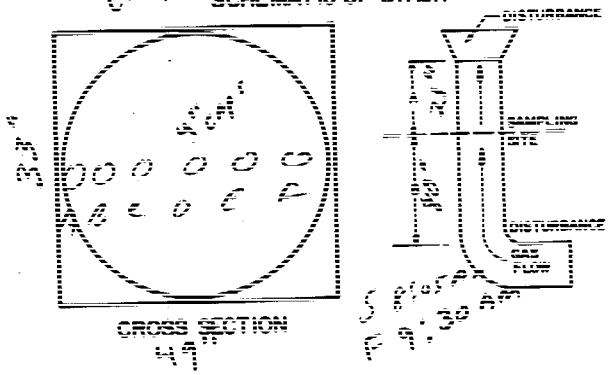

CROSS SECTION 49"

S 8:05 AM
F 9:30 AM

PLANT New Ent Std Lime
DATE 10-19-88
LOCATION STACK
OPERATOR NRS
STACK NO.
RUN NO. 1
SAMPLE BOX NO. 1
Y FACTOR 1.01

AMBIENT TEMPERATURE 49°
BAROMETRIC PRESSURE 30.12
ASSUMED MOISTURE, % 18
PROBE LENGTH, in 42
NOZZLE DIAMETER, in .225
STACK DIAMETER, in
NOZZLE I.D. B10
PITOT CONSTANT .84

METER ΔH @ 1.82
c FACTOR
PROBE OR PITOT I.D. 4E1

WEIGHT OF PARTICULATE COLLECTED, mg		
SAMPLE	FILTER	PROBE WASH
FINAL WEIGHT		
TARE WEIGHT	.2984	
WEIGHT GAIN		
CONTAINER NUMBER	TOTAL	

TRAVERSE POINT NUMBER	SAMPLING TIME (θ) min.	(P_s) STATIC PRESSURE (in. H_2O) NEG	STACK TEMPERATURE (T_s) °F	VELOCITY HEAD (ΔP_s)	VELOCITY HEAD ($\sqrt{\Delta P_s}$)	PRESSURE DIFFERENTIAL ACROSS ORIFICE METER (ΔH) in. H_2O ACTUAL	PRESSURE DIFFERENTIAL ACROSS ORIFICE METER (ΔH) in. H_2O DESIRED	GAS SAMPLE VOLUME (V_m), ft³ 505.70	GAS SAMPLE TEMPERATURE AT DRY GAS METER INLET ($T_{m_{in}}$), °F	GAS SAMPLE TEMPERATURE AT DRY GAS METER OUTLET ($T_{m_{out}}$), °F	SAMPLE BOX TEMPERATURE °F	TEMPERATURE OF GAS LEAVING CONDENSER OR LAST IMPINGER °F	PUMP VACUUM in. Hg gauge	VELOCITY fps
A 5	2.5	.6	255	1.60	1.265	3.00		507.9		44	250	39	4.5	
4	5.0	—	269	1.90	1.378	3.50		510.4		44	—	—	5.0	
3	7.5	.3	267	.90	.9487	1.70		512.0		45	—	—	3.6	
2	10.0	—	264	.70	.8367	1.30		513.6		45	240	42	3.0	
1	12.5	.2	262	.61	.781	1.05		515.0		46	—	—	3.0	
B 5	2.5	—	263	2.20	1.483	3.80		517.3		46	—	—	5.6	
4	5.0	1.1	266	2.30	1.52	3.95		519.9		48	230	46	5.0	
3	7.5	—	263	1.50	1.225	2.60		521.9		49	—	—	4.0	
2	10.0	.3	261	.84	.9165	1.50		523.7		49	—	—	3.0	
1	12.5	—	262	.71	.8426	1.20		525.1		51	255	50	3.0	
C 5	2.5	.6	265	1.80	1.342	3.10		527.3		53	—	—	5.0	
4	5.0	—	271	1.70	1.3	2.90		529.7		54	—	—	4.5	
3	7.5	.4	267	1.30	1.14	2.35		531.6		56	240	50	4.0	
2	10.0	—	264	.75	.866	1.30		533.1		57	—	—	3.5	
1	12.5	.3	265	.39	.6245	.68		534.		57	—	—	3.0	
TOTAL														
AVERAGE														

LEAK RATE, cfm

VOLUME OF LIQUID WATER COLLECTED	IMPINGER VOLUME ml 1	2	3	4	SILICA GEL WEIGHT g
FINAL	232	134	8		212
INITIAL	100	100	0		200
LIQUID COLLECTED	132	34	8		12
TOTAL VOLUME COLLECTED					

ORSAT MEASUREMENT	TIME	CO_2	O_2	CO	N_2
1		20	17.4	0	
2		20	17.4	0	
3		21	18.4	0	
AVG.		[illegible]	[illegible]	0	

218

COMMENTS:

GANNETT FLEMING ENVIRONMENTAL ENGINEERS, INC.

PARTICULATE FIELD DATA

SCHEMATIC OF STACK

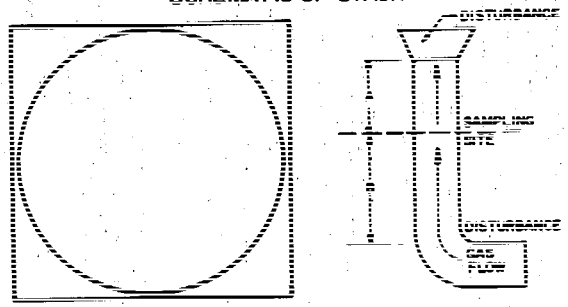

CROSS SECTION

METER ΔH @ _____

C FACTOR _____

PROBE OR PITOT I.D. _____

PLANT _____
DATE 10-19-84
LOCATION _____
OPERATOR _____
STACK NO. _____
RUN NO. 1
SAMPLE BOX NO. _____
Y FACTOR _____

AMBIENT TEMPERATURE _____
BAROMETRIC PRESSURE _____
ASSUMED MOISTURE, % _____
PROBE LENGTH, in _____
NOZZLE DIAMETER, in _____
STACK DIAMETER, in _____
NOZZLE I.D. _____
PITOT CONSTANT _____

WEIGHT OF PARTICULATE COLLECTED, mg		
SAMPLE	FILTER	PROBE WASH
FINAL WEIGHT		
TARE WEIGHT		
WEIGHT GAIN		
CONTAINER NUMBER	TOTAL	

TRAVERSE POINT NUMBER	SAMPLING TIME (θ) min	(P_s) STATIC PRESSURE (in. H₂O)	STACK TEMPERATURE (T_s) °F	VELOCITY HEAD (ΔP)	(√ΔP)	PRESSURE DIFFERENTIAL ACROSS ORIFICE METER (ΔH) in. H₂O ACTUAL	DESIRED	GAS SAMPLE VOLUME (V_m), m³	GAS SAMPLE TEMPERATURE AT DRY GAS METER INLET (T_m in) °F	OUTLET (T_m out) °F	SAMPLE BOX TEMPERATURE °F	TEMPERATURE OF GAS LEAVING CONDENSER OR LAST IMPINGER °F	PUMP VACUUM in. Hg	VELOCITY fps
B5	2.5	.4	264	1.50	1.225	2.60		536.4		59	240	46	4.5	
4	5.0	—	264	1.10	1.05	1.90		538.2		59	—	—	4.0	
3	7.5	.3	267	.98	.938	1.50		540.0		60	—	—	3.0	
2	10.0	—	266	.55	.7416	.95		541.2		61	255	52	2.5	
1	12.5	.1	266	.16	.3973	.26		542.0		61	—	—	2.0	
E5	2.5	—	267	1.50	1.225	2.60		544.1		62	—	—	4.0	
4	5.0	.5	270	1.10	1.05	1.90		546.8		63	230	52	4.0	
3	7.5	—	269	.85	.922	1.50		547.5		63	—	—	2.5	
2	10.0	.4	266	.30	.548	.52		548.5		64	—	—	2.5	
1	12.5	—	267	.33	.5745	.55		549.5		65	250	52	2.5	
D5	2.5	.6	267	1.60	1.265	2.75		551.6		66	—	—	4.5	
4	5.0	—	267	1.60	1.265	2.75		553.7		66	—	—	4.5	
3	7.5	.1	269	.20	.447	.35		554.8		66	235	51	2.5	
2	10.0	—	261	.11	.332	.19		555.3		66	—	—	2.0	
1	12.5	.1	259	.11	.332	.19		555.875		66	—	—		
TOTAL	75	—												
AVERAGE		.02	265	1.059		.13		50.175		56				

PRE-PARTICULATE LEAK RATE, cfm .009 @ 8" Hg 1 min

VOLUME OF LIQUID WATER COLLECTED	IMPINGER VOLUME, ml 1	2	3	4	SILICA GEL WEIGHT g
FINAL					
INITIAL					
LIQUID COLLECTED					
TOTAL VOLUME COLLECTED					

ORSAT MEASUREMENT	TIME	CO_2	O_2	CO	N_2
1					
2					
3					
AVG.					

COMMENTS:

Not 100% analysis
Paid LON Rollover

GANNETT FLEMING ENVIRONMENTAL ENGINEERS, INC.

PARTICULATE FIELD DATA

SCHEMATIC OF STACK

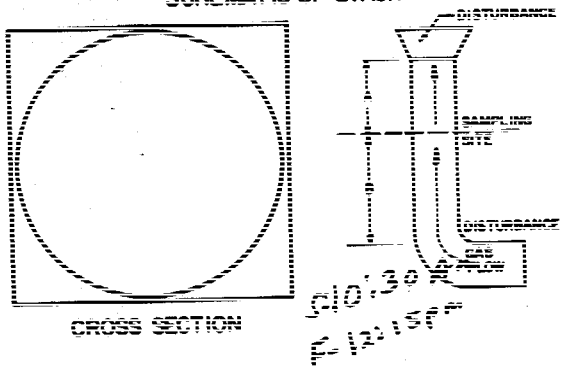

PLANT: [illegible]
DATE: 10-19-87
LOCATION: Stack
OPERATOR: [illegible]
STACK NO.:
RUN NO.: 2
SAMPLE BOX NO.: 1
Y FACTOR: 1.01

AMBIENT TEMPERATURE: 52
BAROMETRIC PRESSURE: 30.12
ASSUMED MOISTURE, %: 16
PROBE LENGTH, in: 42
NOZZLE DIAMETER, in: .225
STACK DIAMETER, in: 49 x 33
NOZZLE I.D.: # 10
PITOT CONSTANT: .87

METER AH@: 1.82
C FACTOR:
PROBE OR PITOT I.D.: 4¼

WEIGHT OF PARTICULATE COLLECTED, mg		
SAMPLE	FILTER	PROBE WASH
FINAL WEIGHT		
TARE WEIGHT	.3026	
WEIGHT GAIN		
CONTAINER NUMBER	TOTAL	

TRAVERSE POINT NUMBER	SAMPLING TIME (θ) min.	(P_s) STATIC PRESSURE (in. H₂O)	STACK TEMPERATURE (T_s) °F	VELOCITY HEAD (ΔP_s)	VELOCITY HEAD (ΔP_s R)	PRESSURE DIFFERENTIAL ACROSS ORIFICE METER (ΔH) in. H₂O ACTUAL	PRESSURE DIFFERENTIAL ACROSS ORIFICE METER (ΔH) in. H₂O DESIRED	GAS SAMPLE VOLUME (V_m), m³ 556.994	GAS SAMPLE TEMPERATURE AT DRY GAS METER (T_m in), °F	GAS SAMPLE TEMPERATURE AT DRY GAS METER (T_m out), °F	SAMPLE BOX TEMPERATURE °F	TEMPERATURE OF GAS LEAVING CONDENSER OR LAST IMPINGER °F	PUMP VACUUM in. Hg	VELOCITY fps
A 5	2.5	1.1	257	3.10	1.76	4.90		558.0	59		230	56	12	
4	5.0	—	265	2.20	1.483	3.50		561.6	61		—	—	10	
3	7.5	.3	263	1.65	1.285	1.65		564.1	63		225	58	3.0	
2	10.0	—	261	.92	.845	1.05		565.6	64		—	—	3.0	
1	12.5	.2	261	.55	.742	.86		566	67		—	—	10.0	
B 5	2.5	—	267	2.50	1.58	3.90		569.7	66		240	50	10.5	
4	5.0	.9	262	2.50	1.58	3.90		571.9	66		—	—	9.0	
3	7.5	—	266	1.60	1.265	2.50		574.2	68		—	—	4.0	
2	10.0	.3	266	.75	.866	1.15		575.7	69		250	56	4.0	
1	12.5	—	266	.65	.806	1.00		577.1	70		—	—	8.0	
C 5	2.5	.6	264	1.70	1.3	2.65		579.1	70		—	—	7.5	
4	5.0	—	264	1.50	1.225	2.35		581.1	72		245	58	6.0	
3	7.5	.3	263	1.10	1.05	1.70		583.1	72		—	—	4.0	
2	10.0	—	265	.67	.885	1.05		584.5	73		—	—	3.0	
1	12.5	.2	264	.36	.6	.56		585.9	73					
TOTAL														
AVERAGE														

LEAK RATE, cfm:

VOLUME OF LIQUID WATER COLLECTED	IMPINGER VOLUME, ml 1	2	3	4	SILICA GEL WEIGHT g
FINAL	228	154	8		219
INITIAL	200	100	0		200
LIQUID COLLECTED	28	54	8		19
TOTAL VOLUME COLLECTED					

ORSAT MEASUREMENT	TIME	CO_2 %	O_2 %	CO %	N_2 %
1		17.1	3.0	0	
2		16.3	3.9	0	
3		16.1	3.9	0	
AVG.		16.48	3.51	0	

COMMENTS:

GANNETT FLEMING ENVIRONMENTAL ENGINEERS, INC.

PARTICULATE FIELD DATA

SCHEMATIC OF STACK

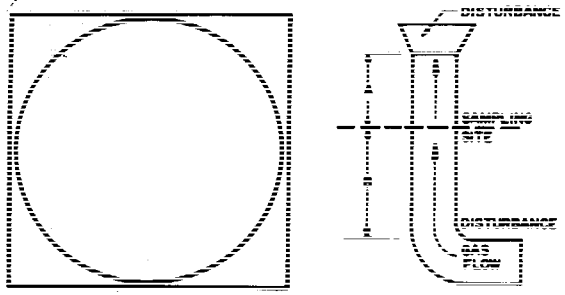

CROSS SECTION

PLANT _____
DATE _____
LOCATION _____
OPERATOR _____
STACK NO. _____
RUN NO. 2
SAMPLE BOX NO. _____
Y FACTOR _____

AMBIENT TEMPERATURE _____
BAROMETRIC PRESSURE _____
ASSUMED MOISTURE, % _____
PROBE LENGTH, in _____
NOZZLE DIAMETER, in _____
STACK DIAMETER, in _____
NOZZLE I.D. _____
PITOT CONSTANT _____

METER ΔH@ _____
Φ FACTOR _____
PROBE OR PITOT I.D. _____

WEIGHT OF PARTICULATE COLLECTED, mg		
SAMPLE	FILTER	PROBE WASH
FINAL WEIGHT		
TARE WEIGHT		
WEIGHT GAIN		
CONTAINER NUMBER	TOTAL	

TRAVERSE POINT NUMBER	SAMPLING TIME (θ) min.	(P_s) STATIC PRESSURE (in. H₂O)	STACK TEMPERATURE (T_s) °F	VELOCITY HEAD (ΔP)	(√ΔP)	PRESSURE DIFFERENTIAL ACROSS ORIFICE METER (ΔH) in. H₂O ACTUAL	DESIRED	GAS SAMPLE VOLUME (V_m) ft³	GAS SAMPLE TEMPERATURE AT DRY GAS METER INLET (T_m) °F	OUTLET (T_m) °F	SAMPLE BOX TEMPERATURE °F	TEMPERATURE OF GAS LEAVING CONDENSER OR LAST IMPINGER °F	PUMP VACUUM in. Hg	VELOCITY
b5	2.5	.7	260	1.40		2.20		587.4		72	240	57	6.6	
4	5.0	—	261	1.05	.1025	1.60		589.1		72	—	—	5.0	
3	7.5	.3	261	.68	.825	1.05		590.6		72	—	—	4.0	
2	10.0	—	259	.41	.64	.64		591.7		73	245	57	3.0	
1	12.5	.1	256	.28	.529	.44		592.		73	—	—	2.5	
F5	2.5	—	259	1.60	1.265	2.50		594.7		70	—	—	7.0	
4	5.0	.3	262	.96	.975	1.50		596.4		69	240	60	5.0	
3	7.5	—	261	.63	.8	1.00		597.3		70	—	—	4.6	
2	10.0	.1	260	.60	.7746	.93		599.2		71	—	—	4.0	
1	12.5	—	257	.42	.647	.66		600.4		71	265	63	3.0	
F6	2.5	.6	258	2.10	1.449	3.36		602.7		71	—	—	9.5	
4	5.0	—	257	.92	.79	1.55		604.5		71	—	—	5.0	
3	7.5	.2	260	.58	.76	.91		605.9		71	255	66	4.0	
2	10.0	—	261	.35	.59	.55		606.9		71	—	—	3.6	
1	12.5	.1	257	.30	.61	.58				71	—	—	3.6	
TOTAL								608.011						
AVERAGE		.02	261	1.0011		.12		596.11		69				

LEAK RATE, cfm .006 @ 10" Hg. 1 min

VOLUME OF LIQUID WATER COLLECTED	IMPINGER VOLUME, ml 1	2	3	4	SILICA GEL WEIGHT g
FINAL					
INITIAL					
LIQUID COLLECTED					
TOTAL VOLUME COLLECTED					

ORSAT MEASUREMENT	TIME	CO_2	O_2	CO	N_2
1					
2					
3					
AVG					

COMMENTS:

GANNETT FLEMING ENVIRONMENTAL ENGINEERS, INC.

PARTICULATE FIELD DATA

SCHEMATIC OF STACK

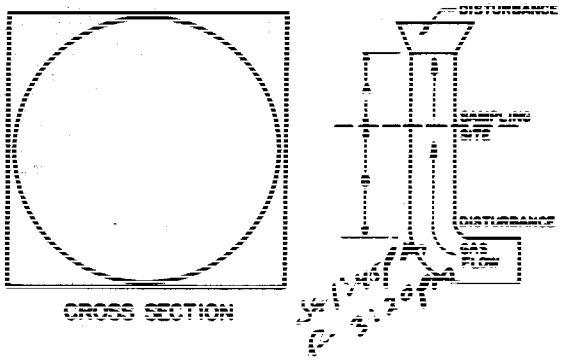

PLANT NB 3
DATE 10-19-77
LOCATION STACK
OPERATOR
STACK NO.
RUN NO. 3
SAMPLE BOX NO. 1
Y FACTOR 1.01

AMBIENT TEMPERATURE 56
BAROMETRIC PRESSURE 30.12
ASSUMED MOISTURE, % 16
PROBE LENGTH, in 72
NOZZLE DIAMETER, in .244
STACK DIAMETER, in
NOZZLE I.D. 0.10
PITOT CONSTANT .84

METER ΔH@ 1.82
C FACTOR
PROBE OR PITOT I.D. 44

WEIGHT OF PARTICULATE COLLECTED, mg		
SAMPLE	FILTER	PROBE WASH
FINAL WEIGHT		
TARE WEIGHT	.3029	
WEIGHT GAIN		
CONTAINER NUMBER	TOTAL	

TRAVERSE POINT NUMBER	SAMPLING TIME (θ) min	(P_s) STATIC PRESSURE (in. H₂O) N 44	STACK TEMPERATURE (T_s) °F	VELOCITY HEAD (ΔP_s)	VELOCITY HEAD (√ΔP_s)	PRESSURE DIFFERENTIAL ACROSS ORIFICE METER (ΔH) in. H₂O ACTUAL	PRESSURE DIFFERENTIAL ACROSS ORIFICE METER (ΔH) in. H₂O DESIRED	GAS SAMPLE VOLUME (V_m), ft³ 0684	GAS SAMPLE TEMPERATURE AT DRY GAS METER INLET (T_m in) °F	GAS SAMPLE TEMPERATURE AT DRY GAS METER OUTLET (T_m out) °F	SAMPLE BOX TEMPERATURE °F	TEMPERATURE OF GAS LEAVING CONDENSER OR LAST IMPINGER °F	PUMP VACUUM in. Hg	VELOCITY in
A5	3	1.1	252	3.1		4.70		611.9		67	240	45	9.0	
4	6	—	250	2.0		3.10				64	—	—	7.0	
3	9	.4	255	.93		1.50		616.7		67	—	—	4.5	
2	12	—	253	.75		1.15		618.6		64	240	49	3.5	
1	15	.3	251	.65		1.16		620.2		65	—	—	3.0	
B5	3	—	258	2.1		3.40		622.9		65	—	—	7.0	
4	6	.7	259	2.4		3.90		625.0		64	245	50	8.0	
3	9	—	256	1.4		2.30		628.6		64	—	—	5.0	
2	12	.3	251	.85		1.40		630.4		64	—	—	3.5	
1	15	—	250	.76		1.25		632.0		64	249	53	3.0	
C5	3	.6	250	1.96		3.20		634.4		64	—	—	5.0	
4	6	—	253	1.45		1.95		636.6		64	—	—	3.4	
3	9	.5	254	1.10		1.80		638.8		64	245	54	4.5	
2	12	—	254	.69		1.10		640.8		64	—	—	3.5	
1	15	.3	252	.45		.73		641.9		65	—	—	3.0	
TOTAL														
AVERAGE														

VOLUME OF LIQUID WATER COLLECTED	IMPINGER VOLUME, ml 1	2	3	4	SILICA GEL WEIGHT g
FINAL	284	129	4		215
INITIAL	100	100	0		200
LIQUID COLLECTED	184	29	4		15
TOTAL VOLUME COLLECTED					

ORSAT MEASUREMENT	TIME	CO_2	O_2	CO	N_2
1		16.7	3.7	0	
2		16.2	4.1	0	
3		16.4	3.8	0	
AVG		16.4	3.9	0	

LEAK RATE, cfm

COMMENTS:

GANNETT FLEMING ENVIRONMENTAL ENGINEERS, INC.

PARTICULATE FIELD DATA

SCHEMATIC OF STACK

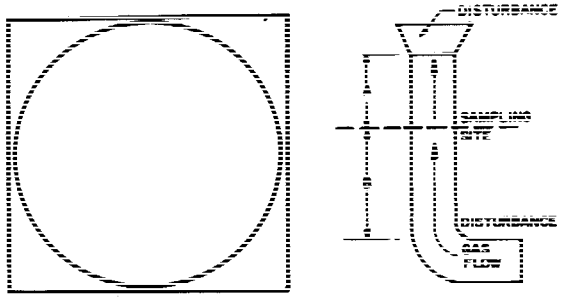

CROSS SECTION

PLANT _____
DATE _____
LOCATION _____
OPERATOR _____
STACK NO. _____
RUN NO. 3
SAMPLE BOX NO. _____
Y FACTOR _____

AMBIENT TEMPERATURE _____
BAROMETRIC PRESSURE _____
ASSUMED MOISTURE, % _____
PROBE LENGTH, in _____
NOZZLE DIAMETER, in _____
STACK DIAMETER, in _____
NOZZLE I.D. _____
PITOT CONSTANT _____

METER ΔH @ _____
C FACTOR _____
PROBE OR PITOT I.D. _____

WEIGHT OF PARTICULATE COLLECTED, mg		
SAMPLE	FILTER	PROBE WASH
FINAL WEIGHT		
TARE WEIGHT		
WEIGHT GAIN		
CONTAINER NUMBER	TOTAL	

TRAVERSE POINT NUMBER	SAMPLING TIME (θ) min	(P_s) STATIC PRESSURE (in. H₂O)	STACK TEMPERATURE (T_s) °F	VELOCITY HEAD (ΔP)	VELOCITY HEAD (√ΔP_s)	PRESSURE DIFFERENTIAL ACROSS ORIFICE METER (ΔH) in. H₂O ACTUAL	PRESSURE DIFFERENTIAL ACROSS ORIFICE METER (ΔH) in. H₂O DESIRED	GAS SAMPLE VOLUME (V_m), ft³	GAS SAMPLE TEMPERATURE AT DRY GAS METER INLET (T_m in) °F	GAS SAMPLE TEMPERATURE AT DRY GAS METER OUTLET (T_m out) °F	SAMPLE BOX TEMPERATURE °F	TEMPERATURE OF GAS LEAVING CONDENSER OR LAST IMPINGER °F	PUMP VACUUM in. Hg	VELOCITY fps
D5	3	.7	257	1.30		1.95		644.1		66	260	54	5.0	
4	6	—	253	1.00		1.50		645.9		67	—	—	4.5	
3	9	.4	250	.69		.95		647.7		68	—	—	4.0	
2	12	—	251	.40		.65		649.1		69	248	55	3.0	
1	15	.2	246	.24		.39		650.1		69	—	—	2.0	
E5	3	—	249	1.30		2.10		652.4		70	—	—	5.0	
4	6	.3	253	.96		1.40		654.4		71	250	55	4.0	
3	9	—	251	.46		.65		655.8		72	—	—	3.0	
2	12	.2	249	.21		.34		656.9		72	—	—	3.0	
1	15	—	250	.12		.20		657.8		72	245	97	3.0	
F5	3	.9	249	1.70		2.70		660.3		72	—	—	6.0	
4	6	—	254	.87		1.35		662.2		72	—	—	4.0	
3	9	.3	252	.37		.60		663.7		73	240	58	2.0	
2	12	—	250	.23		.37		664.7		73	—	—	2.0	
1	15	.2	249	.20		.32		[illegible]		73	—	—	2.0	
TOTAL	90							665.845						
AVERAGE		.03	252	.936		.11		67.406		67				

LEAK RATE, cfm _____

VOLUME OF LIQUID WATER COLLECTED	IMPINGER VOLUME, ml 1	2	3	4	SILICA GEL WEIGHT g
FINAL					
INITIAL					
LIQUID COLLECTED					
TOTAL VOLUME COLLECTED					

ORSAT MEASUREMENT	TIME	CO_2	O_2	CO	N_2
1					
2					
3					
AVG					

COMMENTS:

NEW ENTERPRISE STONE & LIME 10/19/88 PROCESS DATA

TIME	PRODUCTION FLOW RATE (Tons/hr)	ASPHALT FEED (Tons/hr)	BAGHOUSE PRESSURE DROP ("H2O)
10:40	237	14	3.8
10:50	237	14	3.8
11:00	237	14	3.8
11:10	237	14	3.8
11:20	254	15	4.0
11:30	272	15	4.0
11:40	257	14	3.8
11:50	265	15	3.8
12:00	281	14	4.0
12:10	278	14	3.8
1:40	252	14	3.5
1:50	252	14	3.5
2:00	250	14	3.0
2:10	254	14	3.0
2:20	270	15	3.5
2:30	270	16	3.5
2:40	257	14	3.5
2:50	236	13	4.0
3:00	220	12	4.0
3:10	236	14	4.0
3:20	200	13	4.0

(4-73)

MASTER DESIGN # 10
JOB MIX FORMULA
REPORT

District _____ County _____

Leg. Rt. _____ Section _____

Station _____ To Station _____

75

...e 1988 Spec. 1D-2WC H Blow Tons _____ P.O. _____

...ontractor: Name _____ Location _____

...t. Conc. Producer: Name New Enterprise Stone & Lime Co. Location Warfordsburg, Pa.

...ituminous Plant: Type Astec Drum Mixer Daily Capacity 2800 tons Mix Time _____

AGGREGATE AND A.C. PRODUCER	LOCATION	SPEC.	TYPE	%	SP. GR.
New Enterprise Stone & Lime Co.	Dry Run, Pa.	Scr.	B	53.6	2.631
Martin Marietta	Boonsboro, Md.	# 8	A	40.4	2.898
See addendum		AC-20	CC	6.0	1.010

Within off

...ype AC-20CC Pen. _____ Visc. @ 140 F _____ Visc. @ 275 F _____ Mix Temp. Specs.

JOB MIX FORMULA AND DESIGN

Bit.	2½	2	1½	1	½	3/8	4	8	16	30	50	100	200
...pper 6.7					100	100	77	51	35	23	18	14	6
...esign 6.0					100	93	69	45	29	17	12	8	5
...ower 5.3					100	85	61	39	23	11	6	4	3

MIX CHARACTERISTICS

...ensity	Lab. Density	Bitumen % by Wt.	Filler % by Wt.	Pass No. 8	Pass ½"	Stability	Flow	Percent by Volume: Voids	VFA	VMA
2.518	2.413	6.0		45	100	2201	10.6	4.2	73.9	16.1
		5.1								

HOT BINS

...in	2½	2	1½	1	3/4	½	3/8	4	8	16	30	50	100	200	Hot Blend %
1								100.0	82.8	56.8	33.3	23.5	15.7	9.9	51.1
2							100.0	94.5	13.2						11.4
3						100.0	81.3	18.9	3.2						37.5
4															
5															
...omb						100.0	93.0	69.0	45.0	29.0	17.0	12.0	8.0	5.0	100.0

BATCH COMPOSITION

	Bitumen	Bin No. 1	Bin No. 2	Bin No. 3	Bin No. 4	Bin No. 5
Per Cent	6.0	48.0	10.7	35.3		

GRADATION CHART ON BACK IS PART OF THIS JOB MIX FORMULA

Approved CONTRACTOR'S REP. [signature] Date 1988

...d P.D.T. INSPECTOR [signature] Date 1988

Approved MATERIALS ENGR. [signature] Date 4-18-88

Approved DISTRICT ENGR. [signature] Date 4-18-88

NOTE: Percent by weight of bitumen and minus No. 8 material to be designated by District Engineer

SECTION 3B

SUMMARY OF LAB ANALYSIS

SUMMARY OF LAB ANALYSIS

TEST DATES: 10-19-88 TEST NO.	PROBE & FILTER RINSE		IMPINGER SOLUTION (H_2O)*			FILTER (gm)	TOTAL PARTICULATE (gm)**
	Acetone (gm)	H_2O (gm)	SOLUBLE (gm)	WASH	INSOLUBLE (gm)		
1	.0082	.0011	.0223	.0013	.0009	.0052	.0149
2	.0063	.0021	.0271	.0021	.0033	.0106	.0218
3	.0151	.0009	.0141	.0011	.0002	.0059	.0216
Blank	.0002	.0003	.0004		N.D.		

COAL ANALYSIS	

* NOT INCLUDED IN FINAL WEIGHT (SOLUBLES)

** BLANKS HAVE BEEN SUBTRACTED FROM TOTAL WEIGHT

N.D. None Detected

Cornett Fleming
ENVIRONMENTAL ENGINEERS, INC.

NEW ENTERPRISE STONE & LIME

FRONT HALF ANALYSIS

FILTERS

Test Run						
No. 1	Final	0.3036	No. 2	0.3132	No. 3	0.3088
	Tare (-)	0.2984	(-)	0.3026	(-)	0.3029
	Net	0.0052		0.0106		0.0059

PROBE WASH (H2O) (1)

Test Run						
No. 1	Final	104.7856	No. 2	98.3519	No. 3	99.0735
	Tare (-)	104.7845	(-)	98.3498	(-)	99.0726
	Net	0.0011		0.0021		0.0009

Blank

Final	88.6584
Tare (-)	88.6581
Net	0.0003

PROBE WASH (ACETONE) (1)

Test Run						
No. 1	Final	105.3381	No. 2	99.5102	No. 3	100.5373
	Tare (-)	105.3299	(-)	99.5039	(-)	100.5222
	Net	0.0082		0.0063		0.0151

Blank

Final	98.7548
Tare (-)	98.7546
Net	0.0002

(1) All washes brought up to 200 ml standard

SECTION 4

INSTRUMENT CALIBRATIONS

CALIBRATION OF SAMPLER CONTROL CONSOLE

(DRY GAS METER AND ORIFICE METER)

CALIBRATION DATE 8-12-88

BAROMETRIC PRESSURE, Pb 29.66 IN. Hg

SAMPLER I.D. AND NO. RAC #1

CALIBRATED BY: NRS

METER NO.

ΔHG = 1.82

Y = 1.01

ORIFICE MANOMETER SETTING ΔH, IN. H_2O	GAS VOLUME WET TEST METER V_w, ft3	GAS VOLUME DRY GAS METER V_d, ft3	TEMPERATURE, °F: WET TEST METER t_w	DRY GAS METER: INLET t_{di}	DRY GAS METER: OUTLET t_{do}	DRY GAS METER: AVERAGE t_d	TIME θ MIN.	Y	ΔHG
0.5	5	4.839	71			70	12.00	.030	1.638
1.0	5	4.953	71			75	8.92	.015	1.793
2.0	10	10.242	71			80	13.48	3.48	2.028
						AVERAGE			

ΔH	$\frac{\Delta H}{13.6}$	Y: $\frac{V_w P_b (t_d + 460)}{V_d \left(P_b + \frac{\Delta H}{13.6}\right)(t_w + 460)}$	ΔHG: $\frac{.0317\ \Delta H}{P_b (t_d + 460)} \left[\frac{(t_w + 460)\ \theta}{V_w}\right]^2$
0.5	.0368	1.020	1.6375
1.0	.0736	1.015	1.7927
2.0	.147	.9879	2.0281

Y = RATIO OF READING OF WET TEST METER TO DRY TEST METER; TOLERANCE FOR INDIVIDUAL VALUES ±0.02 FROM AVERAGE.

HG = ORIFICE PRESSURE DIFFERENTIAL THAT EQUATES TO 0.75 CFM OF AIR @ 68°F AND 29.92 INCHES OF MERCURY, IN. H_2O; TOLERANCE FOR INDIVIDUAL VALUES ±0.20 FROM AVERAGE.

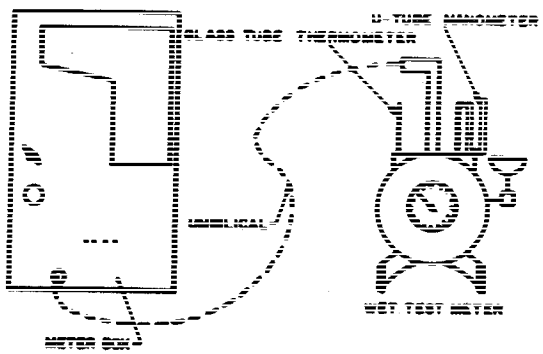

CALIBRATION SETUP

CONNECT THE COMPONENTS AS SHOWN IN THE FIGURE. RUN THE PUMP FOR ABOUT 15 MINUTES WITH THE ORIFICE MANOMETER SET AT ABOUT .5 IN. H_2O. THIS WILL ALLOW THE INTERIOR SURFACE OF THE WET TEST METER TO BE WETTED. GATHER THE INFORMATION AS REQUESTED ON THE DATA SHEET.

Gannett Fleming
ENVIRONMENTAL ENGINEERS, INC.

Gannett Fleming
ENVIRONMENTAL ENGINEERS, INC.

NOZZLE CALIBRATION DATA SHEET

DATE OF CAL: 6-24-88 NOZZLE IDENTIFIER: BIO

TECHNICIAN: NRS

NOZZLE ROTATED BY 120 DEGREE INCREMENTS AND DIAMETER MEASURED TO NEAREST 0.001 INCH. OBSERVED READINGS AND AVERAGE:

POSITION	DIAMETER (INCHES)
1	.224
2	.225
3	.225
AVERAGE	.225

DEP
AIR QUALITY CONTROL
DEC 06 1988
HARRISBURG REGION