Note: This is a reference cited in *AP 42, Compilation of Air Pollutant Emission Factors, Volume I Stationary Point and Area Sources.* AP42 is located on the EPA web site at www.epa.gov/ttn/chief/ap42/

The file name refers to the reference number, the AP42 chapter and section. The file name "ref02_c01s02.pdf" would mean the reference is from AP42 chapter 1 section 2. The reference may be from a previous version of the section and no longer cited. The primary source should always be checked.

am test inc.

4900 9TH AVENUE N.W., • SEATTLE, WASHINGTON 98107-3697 • 206/783-4700

ATMOSPHERIC EMISSION EVALUATION

OCTOBER 11, 1985

Prepared For:

RECEIVED
OCT 16 1985
OAPCA

LAKESIDE INDUSTRIES
CMI ASPHALT CONCRETE BATCH PLANT
PORT ANGELES, WASHINGTON
SEPTEMBER 10, 1985

0.74 $\frac{lb\ P}{hr}$

Submitted by:

KRIS A. HANSEN
DIRECTOR, AIR QUALITY DIVISION
AM TEST, INC.
SEATTLE, WASHINGTON

TABLE OF CONTENTS

	Pages
INTRODUCTION	1
SUMMARY OF RESULTS	2
DISCUSSION	3-7
Sampling Procedures - Overview	3
Sampling Procedures - Specific	3-4
Sample Train	4-5
Sample Clean-Up and Analysis	5-7
QUALITY ASSURANCE	7-8
CALCULATION OF RESULTS	8
Method 5 - Particulate Emission Concentration Printouts	9-11
APPENDIX	
Method 1 - Location of Traverse Points	12-13
Method 2 - Stack Gas Velocity	14
Method 3 - Molecular Weight and Excess Air Calculation	14
Method 4 - Stack Gas Moisture	15
Method 5 - Particulate Emission Concentration Calculation	16-17
Sample Calculation Sheet - Method 5	18
Figure 1. Method 5 Sample Train Schematic	19
Professional Resumes	20-21
Am Test Laboratory - Information and Services	22-24
Am Test Laboratory Quality Assurance & Quality Control	25-28
Source Test Observation Checklist	29
Visual Emission Readings	30-32
Field Data Sheets	33-35

INTRODUCTION

The purpose of this atmospheric emission evaluation performed at Lakeside Industries' CMI Model ST400 asphaltic concrete batch plant located in Port Angeles, Washington was to determine the particulate emission concentration from the Astec baghouse exhaust. Three (3) particulate emission concentration compliance tests were performed on September 10, 1985 utilizing the Environmental Protection Agency's (EPA) Method 5 procedures. Mr. James A. Guenthoer of Am Test, Inc., Seattle, Washington performed the field sampling and laboratory analysis. Mr. Kris A. Hansen of Am Test performed data reduction. Mr. Harold Nickel of Lakeside Industries, Bellevue, Washington coordinated this project. Mr. Bob Dutrow, Lakeside Industries' Port Angeles plant foreman, coordinated plant operations. Mr. James P. Werner of the Olympic Air Pollution Control Authority (OAPCA) observed the field testing.

SUMMARY OF RESULTS

The results of the three (3) Method 5 compliance tests for determining particulate emission concentration, collected September 10, 1985 at Lakeside Industries' Port Angeles, Washington facility, are summarized in Table 1 below:

Table 1. Summary of particulate emission concentration test results.

Sample Run #	Am Test Lab #	Partic. Conc. gr/dscf	Mass Emission Rate lbs/hr	St. of Wa. Partic. Std gr/dscf	Air Flow dscf/m
1	95743	0.004	0.96	0.10	31820
2	95744	0.003	0.87	0.10	30973
3	95745	0.001	0.38	0.10	31521
Average		0.002	0.74	0.10	31438

The average particulate mass emission rate of 0.002 grains per dry standard cubic foot (gr/dscf) was within the Olympic Air Pollution Control Authority (OAPCA) standard of 0.10 gr/dscf for this particular asphalt paving plant. Computer printouts which detail the complete results immediately follow the "Calculation of Results" section of this report. An acceptable leak check followed each run. The percentage isokinetics were within the acceptable limits of 100 ± 10% for each run.

DISCUSSION

SAMPLING PROCEDURES - OVERVIEW

Sampling procedures specified in the July 1, 1984 Title 40 Code of Federal Regulations, Part 60 (40 CFR 60), Appendix A, Methods 1-5, were followed throughout this project. Methodology suggested in the Environmental Protection Agency's (EPA's) Air Pollution Training Institute "Course 450 - Source Sampling for Particulate Pollutants" and quality assurance procedures outlined in the EPA's reference manual titled Quality Assurance Handbook for Air Pollution Measurement Systems, Volume 3, EPA-600/4-77-0276, along with current updates, were used for supplemental information with respect to quality assurance and testing protocol.

SAMPLING PROCEDURES - SPECIFIC

The 51 inch by 38 inch rectangular stack had four (4) sampling ports located at equal distances along the 51 inch side. The sampling ports were located 4 feet upstream and 8 feet downstream from the nearest flow disturbance. Four (4) traverses of six (6) points each were selected according to Method 1 criteria (40 CFR 60, July 1, 1984). Each point was sampled for 2.5 minutes, for a total sampling time for each Method 5 run of 60 minutes. Both the sample probe and the support plank were marked with felt pen to indicate the proper point location.

Stack condition measurements were performed prior to testing. A sample nozzle was chosen and isokinetic operating parameters were established utilizing a Hewlett-Packard 41CX programmable calculator. The sampling nozzle, probe and prefilter connective glassware were cleaned and acetone rinsed prior to use. The sample train was assembled and determined to be leak free following the

procedures outlined in Method 5. Before each test a final check was made to assure that the plant was operating at the desired production rate and the desired operating parameters. A final check was made of the box and probe heat. Ice was added to the condenser section. The sample nozzle was positioned in the stack at the first sample point. The sample pump was then turned on and the sampling rate adjusted for isokinetic sampling. Sampling proceeded isokinetically at each of the 6 traverse points. The pump was then turned off and the sample train was moved to the second port. Care was taken to assure that the nozzle tip did not touch the port nipple. The nozzle was then positioned at the first point of the second traverse, the pump was again turned on and isokinetic sampling was performed at the 6 traverse points. Upon completion of the second traverse the probe was removed from the stack and the third and fourth sampling ports were traversed. A post-test leak check was performed according to Method 5 procedures.

SAMPLE TRAIN

The sample train used was an EPA Method 5 design with modifications as shown in Figure 1. The stainless steel button hook nozzle used had a diameter of 0.272 inches as measured on-site with inside calipers. A three and one-half (3.5) foot stainless steel probe with a heated liner was used for these tests. The probe was equipped with "S" type pitot tubes and a thermocouple sensor. The pitot tubes have been recently calibrated at the State of Washington Department of Ecology (DOE) wind tunnel. A thermocouple probe was used to measure the stack gas temperature. The Fluke thermocouple indicator has been certified by the manufacturer to be accurate within 1 degree Fahrenheit. A field check with 32 degree icewater was performed. A glass filter assembly with a 125 millimeter glassfiber filter was enclosed in a temperature controlled heated box. The average box temperature was maintained at 248° F $\pm$ 25° F. The nozzle, probe liner, prefilter connective

glassware and glassfiber filter is often referred to as the "fronthalf" of the sample train. Following the filter is a condenser section which, by convention, is referred to as the "backhalf". The condenser section consisted of a modified Smith-Greenburg bubbler containing 100 milliliters (ml) of deionized, distilled water, an impinger also containing 100 ml of deionized, distilled water, an empty bubbler, and a bubbler containing indicating silica gel desiccant. The backhalf was maintained at a temperature below 70^{0} F. The sample train was connected to a control box by means of an umbilical cord which contains a vacuum hose, pitot lines, thermocouple wires and a 4-wire electrical cord. The control box (meter box) was used to monitor stack conditions and to facilitate isokinetic sampling. The control box consists of a diaphragm pump used to pull the stack gas through the sample train, fine and course metering valves to control the sampling rate, a vacuum gauge which measures the pressure drop from the sampling nozzle to the metering valves, and a dry gas meter. The dry gas meter has been recently calibrated on a spirometer at the State of Washington Department of Ecology. At the outlet of the dry gas meter is a critical orifice which is used to isokinetically control the flow of gas through the metering system. The pressure drop across the orifice was monitored with both low and high range magnehelic gauges. The pitot tubes utilized to measure stack gas velocity are connected to the control box via the umbilical cord. The control box contains low and high range magnehelic gauges which are used for the velocity measurement.

Sample Clean-Up and Analysis

Following sample collection, the Method 5 sample box was transferred to a room free from air disturbances and airborne particulate. The glassfiber filter was transferred to a petri dish labeled with the sample date, client name and run number. This portion of the particulate catch is referred to as the "A" section.

Care was taken to assure that any loose particulate matter and filter mat were quantitatively transferred to the petri dish. The filters were then placed in an oven and baked at 103° C for 2 hours, then they were transferred to a desiccator containing indicating silica gel for 24 hours of desiccation prior to obtaining final weights. The tare and final weights were made using a Mettler AE163 electronic balance set to a time integrating mode with a readibility of 0.1 milligrams. The filters containing particulate matter were weighed to a constant weight of $\pm$ 0.5 milligrams. The interval between weighings was at least 6 hours. These weights were recorded in a bound laboratory notebook.

The contents of the nozzle, probe liner and prefilter connective glassware were quantitatively transferred to the "B" section storage container labeled with sample date, client name, and run number. Several rinses of acetone, with simultaneous loosening of particulate matter using a clean nylon brush, were used for the fronthalf clean-up. An iodine flask with a female ball joint end was attached to the male ball joint end of the probe to assure that no particulate matter was lost during the cleaning of the probe. This contents of this "B" section acetone rinse was transferred to a tared 150 milliliter beaker. The volume of acetone in the beaker was recorded and the beakers were placed on a hot plate with the temperature set on low. The acetone was evaporated under close supervision at a temperature lower than the boiling point of acetone. A tared beaker with 100 milliliters of acetone was handled in an identical fashion to the "B" section samples as a control. The tare and final weights of the beakers were obtained following 2 hours of heating to 103° C and 24 hours of desiccation, as with the filters described above. The samples and acetone blanks were weighed to a constant weight of $\pm$ 0.5 milligrams at 6 hour or greater intervals.

The bubblers and impingers utilized for the condenser section, or "backhalf" of the sample train were weighed with an accuracy of ± 0.1 grams before and after sampling on a triple beam balance. The difference between the initial and final weights of the condenser section constitute the amount of moisture gain during the run. The percent moisture was calculated and did not exceed the theoretical psychrometric chart value. The particulate weights are included on the "Method 5-Particulate Emission Concentration Results" computer printouts which immediately follow the "Calculation of Results" section of this report.

QUALITY ASSURANCE

A strict quality assurance program was followed throughout preparation, sampling, analysis, and report preparation. This program includes recent equipment calibrations, careful chain-of-custody procedures, and use of ACS quality or better reagents.

The sample nozzle was calibrated on-site before sampling using inside calipers accurate to ± 0.001 inch. The dry gas meter was recently calibrated on a spirometer at the Washington State Department of Ecology (DOE). The "S" type pitot tubes have been recently calibrated at the DOE laboratory utilizing a wind tunnel and a standard "P" type pitot tube. The Fluke thermocouple indicator has an accuracy of ± 1 degree Fahrenheit.

In addition to quantitative clean-up and analysis procedures, acetone and filter blanks were carried throughout the laboratory procedures. The Method 5 filters and beakers were weighed to a constant weight of ± 0.5 milligrams. Additional

information with respect to the Am Test, Inc. laboratory quality assurance and quality control protocol is included in the Appendix of this report.

CALCULATION OF RESULTS

The results of these tests were calculated using the equations found in the 40 CFR 60 Methods 1-5. These equations are included in the Appendix. Final result calculations were performed using Hewlett-Packard 110 and 150 computer systems. A by-hand sample calculation for the Method 5 runs was performed on a Hewlett-Packard 41CX calculator, and may be found in the Appendix of this report.

OD 5 - PARTICULATE EMISSION CONCENTRATION RESULTS
AM TEST, INC. - AIR QUALITY DEPARTMENT

FILE NAME:	LKSD2_R1	LAB #:	95743
CLIENT:	LAKESIDE INDUSTRIES	START TIME:	0753 O'CLOCK
LOCATION:	PORT ANGELES, WA	STOP TIME:	0808 O'CLOCK
SAMPLE SITE:	BAGHOUSE STACK	SAMPLE TIME:	60.0 MINUTES
SAMPLE DATE:	SEPT. 10, 1985		
RUN #:	1-METHOD 5		
OPERATOR:	JIM GUENTHOER		
CONTACT:	HAROLD NICKEL		

FINAL WT. OF H2O G.	INIT.WT. OF H2O G	NET WT. OF H2O G.
739.9	573.4	166.5
612.6	578.5	34.1
476.0	470.3	5.7
763.4	753.6	9.8
TOTAL H2O GAIN:		216.1
TOTAL VOLUME (SCF)		10.17
PERCENT MOISTURE:		15.11
Bws:		0.1511

PITOT Cp:	0.845
NOZZLE DIA INCHES:	0.272
NOZZLE AREA FT^2:	0.0004
STACK DIA. INCHES:	51"X38"
STACK AREA FT^2:	13.458
METER TEMP. DEG F:	72.5
BAROM. PRES. "HG:	29.53
STATIC PRES. "H2O:	0.50
STACK PRES. "HG:	29.57
ORIFICE PRES "H2O:	1.64
METER PRES. "HG:	29.69

INIT. METER VOLUME	740.702
FINAL METER VOLUME	798.268
VOLUME SAMPLED:	57.566
STD VOLUME (DSCF):	57.131
STD VOLUME (DSCM):	2.019
Y FACTOR:	1.010

AVERAGE % CO2:	3.4
AVERAGE % O2:	14.6
AVERAGE % CO:	0.0
STACK GAS MW. DRY:	29.13
STACK GAS MW. WET:	27.45

****

SAMPLE POINT	VELOCITY " OF H2O	TEMPERATURE DEGREES F.	SAMPLE POINT	VELOCITY " OF H2O	TEMPERATURE DEGREES F.
1	0.60	265	1	0.95	249
2	0.70	265	2	0.95	247
3	0.70	264	3	0.95	245
4	0.70	261	4	0.90	243
5	0.75	263	5	1.00	239
6	0.60	259	6	1.00	244
1	0.70	250	1	0.90	243
2	0.90	258	2	0.90	240
3	0.90	255	3	0.95	239
4	0.90	253	4	1.00	248
5	1.00	250	5	1.10	246
6	1.00	251	6	1.10	244

****

PERCENT ISOKINETICS:	100 %	
STACK TEMPERATURE:	250.9 DEG. F.	710.9 DEG. R.
AVERAGE VELOCITY HEAD:	0.88 " OF H2O	
STACK GAS VELOCITY:	61.12 AFT/SEC	63.25 FT/SEC.
STACK GAS AIR FLOW:	49351.99 ACF/M	31819.6 DSCF/M
PARTICULATE CONCENTRATION:		0.004 GR/DSCF
POLLUTANT MASS RATE (CONCENTRATION METHOD):		0.96 LB/HR

FRONTHALF PARTICULATE MASS LOADING

FILTER NUMBER: #125-024	
TARE WEIGHT OF FILTER IN GRAMS:	0.8882
FINAL WEIGHT OF FILTER IN GRAMS:	0.8993
NET WEIGHT OF PARTIC. MATTER IN GRAMS:	0.0111
BEAKER NUMBER: #85-294	
TARE WEIGHT OF BEAKER IN GRAMS:	64.3789
FINAL WEIGHT OF BEAKER IN GRAMS:	64.3811
NET WEIGHT OF PARTIC. MATTER IN GRAMS:	0.0022
VOLUME OF ACETONE IN MILLILITERS:	140.0
TARE WEIGHT OF ACETONE IN GRAMS:	70.9025
FINAL WEIGHT OF ACETONE IN GRAMS:	70.9027
VOLUME OF ACETONE IN MILLILITERS:	100.0
NET CONTRIBUTION OF ACETONE IN MG/ML:	0.0020 0.0002
TOTAL FRONTHALF PARTIC. MATTER IN GRAMS:	0.0130 0.0131

ADD 5 - PARTICULATE EMISSION CONCENTRATION RESULTS
AM TEST, INC. - AIR QUALITY DEPARTMENT

FILE NAME:	LKSD2_R2	LAB #:	95744
CLIENT:	LAKESIDE INDUSTRIES	START TIME:	1110 O'CLOCK
LOCATION:	PORT ANGELES, WA	STOP TIME:	1230 O'CLOCK
SAMPLE SITE:	BAGHOUSE STACK	SAMPLE TIME:	60.0 MINUTES
SAMPLE DATE:	SEPT. 10, 1985		
RUN #:	2-METHOD 5		
OPERATOR:	JIM GUENTHOER		
CONTACT:	HAROLD NICKEL		

FINAL WT. OF H2O G.	INIT.WT. OF H2O G	NET WT. OF H2O G.
774.4	596.8	177.6
646.3	585.5	60.8
483.5	477.7	5.8
714.3	699.8	14.5
TOTAL H2O GAIN:		258.7
TOTAL VOLUME (SCF)		12.18
PERCENT MOISTURE:		17.29
Bws:		0.1729

PITOT Cp:	0.845
NOZZLE DIA INCHES:	0.272
NOZZLE AREA FT^2:	0.0004
STACK DIA. INCHES:	51"X38"
STACK AREA FT^2:	13.458
METER TEMP. DEG F:	79.0
BAROM. PRES. "HG:	29.57
STATIC PRES. "H2O:	0.50
STACK PRES. "HG:	29.61
ORIFICE PRES "H2O:	4.65
METER PRES. "HG:	29.95

INIT. METER VOLUME	798.692
FINAL METER VOLUME	857.600
VOLUME SAMPLED:	58.908
STD VOLUME (DSCF):	58.267
STD VOLUME (DSCM):	2.059
Y FACTOR:	1.010

AVERAGE % CO2:	3.6
AVERAGE % O2:	14.4
AVERAGE % CO:	0.0
STACK GAS MW. DRY:	29.15
STACK GAS MW. WET:	27.22

****

SAMPLE POINT	VELOCITY " OF H2O	TEMPERATURE DEGREES F.	SAMPLE POINT	VELOCITY " OF H2O	TEMPERATURE DEGREES F.
1	0.90	240	1	0.90	245
2	0.90	235	2	0.90	250
3	1.00	230	3	0.80	254
4	1.10	228	4	0.80	253
5	1.25	228	5	0.90	253
6	1.25	227	6	0.90	253
1	0.80	243	1	0.60	254
2	0.90	242	2	0.65	255
3	0.90	243	3	0.65	251
4	0.95	242	4	0.50	255
5	1.05	242	5	0.60	251
6	1.05	244	6	0.60	252

****

PERCENT ISOKINETICS:	105 %	
STACK TEMPERATURE:	244.8 DEG. F.	704.8 DEG. R.
AVERAGE VELOCITY HEAD:	0.86 " OF H2O	
STACK GAS VELOCITY:	60.24 AFT/SEC	62.55 FT/SEC.
STACK GAS AIR FLOW:	48647.33 ACF/M	30972.5 DSCF/M
PARTICULATE CONCENTRATION:		0.003 GR/DSCF
POLLUTANT MASS RATE (CONCENTRATION METHOD):		0.87 LB/HR

FRONTHALF PARTICULATE MASS LOADING

FILTER NUMBER: #125-025	
TARE WEIGHT OF FILTER IN GRAMS:	0.8838
FINAL WEIGHT OF FILTER IN GRAMS:	0.8961
NET WEIGHT OF PARTIC. MATTER IN GRAMS:	0.0123
BEAKER NUMBER: #85-296	
TARE WEIGHT OF BEAKER IN GRAMS:	65.1574
FINAL WEIGHT OF BEAKER IN GRAMS:	65.1577
NET WEIGHT OF PARTIC. MATTER IN GRAMS:	0.0003
VOLUME OF ACETONE IN MILLILITERS:	140.0
TARE WEIGHT OF ACETONE IN GRAMS:	70.9025
FINAL WEIGHT OF ACETONE IN GRAMS:	70.9027
VOLUME OF ACETONE IN MILLILITERS:	100.0
NET CONTRIBUTION OF ACETONE IN MG/ML:	0.0020
TOTAL FRONTHALF PARTIC. MATTER IN GRAMS:	0.0123

100 5 - PARTICULATE EMISSION CONCENTRATION RESULTS
AM TEST, INC. - AIR QUALITY DEPARTMENT

FILE NAME:	LKSD2 R3	LAB #:	95745
CLIENT:	LAKESIDE INDUSTRIES	START TIME:	1447 O'CLOCK
LOCATION:	PORT ANGELES, WA	STOP TIME:	1605 O'CLOCK
SAMPLE SITE:	BAGHOUSE STACK	SAMPLE TIME:	60.0 MINUTES
SAMPLE DATE:	SEPT. 10, 1985		
RUN #:	3-METHOD 5		
OPERATOR:	JIM GUENTHOER		
CONTACT:	HAROLD NICKEL		

FINAL WT. OF H20 G.	INIT.WT. OF H20 G	NET WT. OF H20 G.
758.7	570.3	188.4
628.2	579.1	49.1
471.6	463.7	7.9
763.0	755.2	7.8
TOTAL H20 GAIN:		253.2
TOTAL VOLUME (SCF)		11.92
PERCENT MOISTURE:		17.02
Bws:		0.1702

PITOT Cp:	0.845
NOZZLE DIA INCHES:	0.272
NOZZLE AREA FT^2:	0.0004
STACK DIA. INCHES:	51"X38"
STACK AREA FT^2:	13.458
METER TEMP. DEG F:	85.5
BAROM. PRES. "HG:	29.59
STATIC PRES. "H20:	0.50
STACK PRES. "HG:	29.63
ORIFICE PRES "H20:	1.73
METER PRES. "HG:	29.75

INIT. METER VOLUME	858.104
FINAL METER VOLUME	917.937
VOLUME SAMPLED:	59.833
STD VOLUME (DSCF):	58.096
STD VOLUME (DSCM):	2.053
Y FACTOR:	1.010

AVERAGE % CO2:	3.3
AVERAGE % O2:	14.7
AVERAGE % CO:	0.0
STACK GAS MW. DRY:	29.12
STACK GAS MW. WET:	27.22

****

SAMPLE POINT	VELOCITY " OF H20	TEMPERATURE DEGREES F.	SAMPLE POINT	VELOCITY " OF H20	TEMPERATURE DEGREES F.
1	0.70	230	1	0.70	234
2	0.70	234	2	0.70	234
3	0.50	234	3	0.75	237
4	0.60	235	4	0.90	240
5	0.60	236	5	1.05	242
6	0.65	236	6	1.10	241
1	0.75	235	1	0.95	244
2	0.80	236	2	0.95	241
3	0.80	233	3	1.10	248
4	0.90	235	4	1.20	248
5	1.00	233	5	1.45	245
6	1.05	233	6	1.45	244

****

PERCENT ISOKINETICS:	103 %	
STACK TEMPERATURE:	237.8 DEG. F.	697.8 DEG. R.
AVERAGE VELOCITY HEAD:	0.87 " OF H20	
STACK GAS VELOCITY:	60.49 AFT/SEC	62.79 FT/SEC.
STACK GAS AIR FLOW:	48847.69 ACF/M	31521.4 DSCF/M
PARTICULATE CONCENTRATION:		0.001 GR/DSCF
POLLUTANT MASS RATE (CONCENTRATION METHOD):		0.38 LB/HR

FRONTHALF PARTICULATE MASS LOADING

FILTER NUMBER: #125-026	
TARE WEIGHT OF FILTER IN GRAMS:	0.8857
FINAL WEIGHT OF FILTER IN GRAMS:	0.8909
NET WEIGHT OF PARTIC. MATTER IN GRAMS:	0.0052
BEAKER NUMBER: #85-297	
TARE WEIGHT OF BEAKER IN GRAMS:	68.4115
FINAL WEIGHT OF BEAKER IN GRAMS:	68.4119
NET WEIGHT OF PARTIC. MATTER IN GRAMS:	0.0004
VOLUME OF ACETONE IN MILLILITERS:	140.0
TARE WEIGHT OF ACETONE IN GRAMS:	70.9025
FINAL WEIGHT OF ACETONE IN GRAMS:	70.9027
VOLUME OF ACETONE IN MILLILITERS:	100.0
NET CONTRIBUTION OF ACETONE IN MG/ML:	0.0020
TOTAL FRONTHALF PARTIC. MATTER IN GRAMS:	0.0053

APPENDIX

METHOD 1 - LOCATION OF TRAVERSE POINTS

Circular Stacks

TRAVERSE POINT	DISTANCE, % of diameter
1	4.4
2	14.7
3	29.5
4	70.5
5	85.3
6	95.6

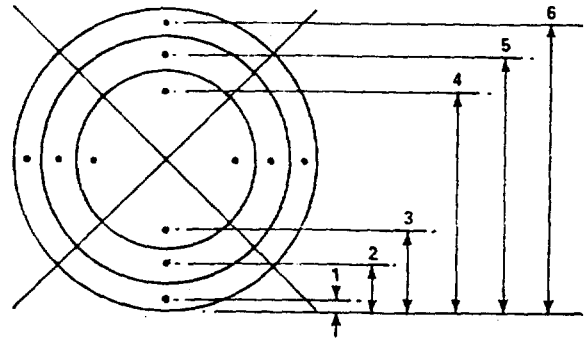

Figure 1-3. Example showing circular stack cross section divided into 12 equal areas, with location of traverse points indicated.

TABLE 1-2. LOCATION OF TRAVERSE POINTS IN CIRCULAR STACKS

[Percent of stack diameter from inside wall to traverse point]

Traverse point number on a diameter	Number of traverse points on a diameter—											
	2	4	6	8	10	12	14	16	18	20	22	24
1	14.6	6.7	4.4	3.2	2.6	2.1	1.8	1.6	1.4	1.3	1.1	1.1
2	85.4	25.0	14.6	10.5	8.2	6.7	5.7	4.9	4.4	3.9	3.5	3.2
3		75.0	29.6	19.4	14.6	11.8	9.9	8.5	7.5	6.7	6.0	5.5
4		93.3	70.4	32.3	22.6	17.7	14.6	12.5	10.9	9.7	8.7	7.9
5			85.4	67.7	34.2	25.0	20.1	16.9	14.6	12.9	11.6	10.5
6			95.6	80.6	65.8	35.6	26.9	22.0	18.8	16.5	14.6	13.2
7				89.5	77.4	64.4	36.6	28.3	23.6	20.4	18.0	16.1
8				96.8	85.4	75.0	63.4	37.5	29.6	25.0	21.8	19.4
9					91.8	82.3	73.1	62.5	38.2	30.6	26.2	23.0
10					97.4	88.2	79.9	71.7	61.8	38.8	31.5	27.2
11						93.3	85.4	78.0	70.4	61.2	39.3	32.3
12						97.9	90.1	83.1	76.4	69.4	60.7	39.8
13							94.3	87.5	81.2	75.0	68.5	60.2
14							98.2	91.5	85.4	79.6	73.8	67.7
15								95.1	89.1	83.5	78.2	72.8
16								98.4	92.5	87.1	82.0	77.0
17									95.6	90.3	85.4	80.6
18									98.6	93.3	88.4	83.9
19										96.1	91.3	86.8
20										98.7	94.0	89.5
21											96.5	92.1
22											98.9	94.5
23												96.8
24												98.9

Rectangular Stacks

For a rectangular cross section, an equivalent diameter (D_e) shall be calculated from the following equation, to determine the upstream and downstream distances:

$$D_e = \frac{2LW}{(L+W)}$$

where L=length and W=width.

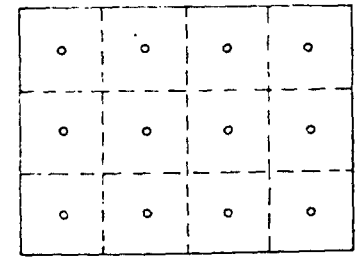

Figure 1-4. Example showing rectangular stack cross section divided into 12 equal areas, with a traverse point at centroid of each area.

METHOD 1 - MINIMUM NUMBER OF TRAVERSE POINTS

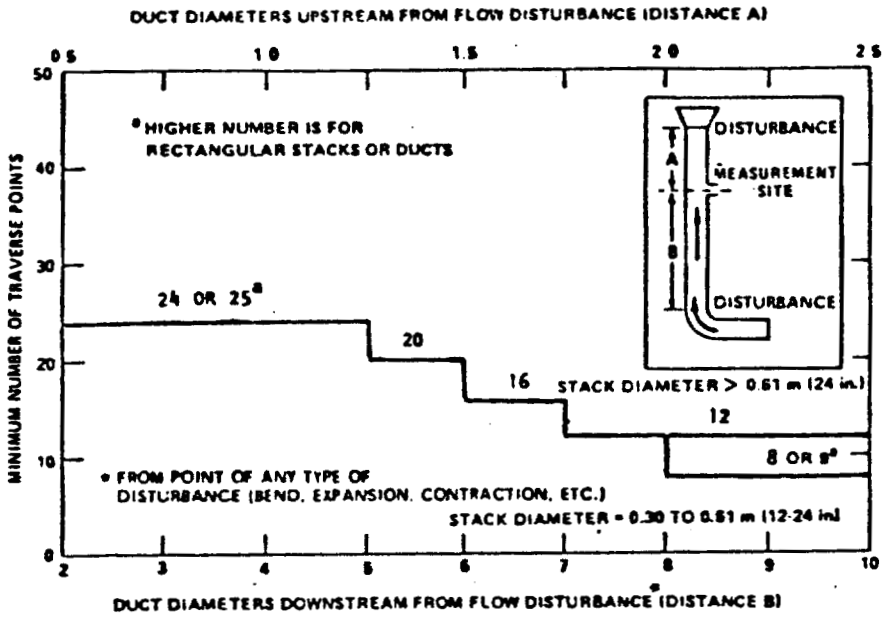

Minimum number of traverse points for particulate traverses.

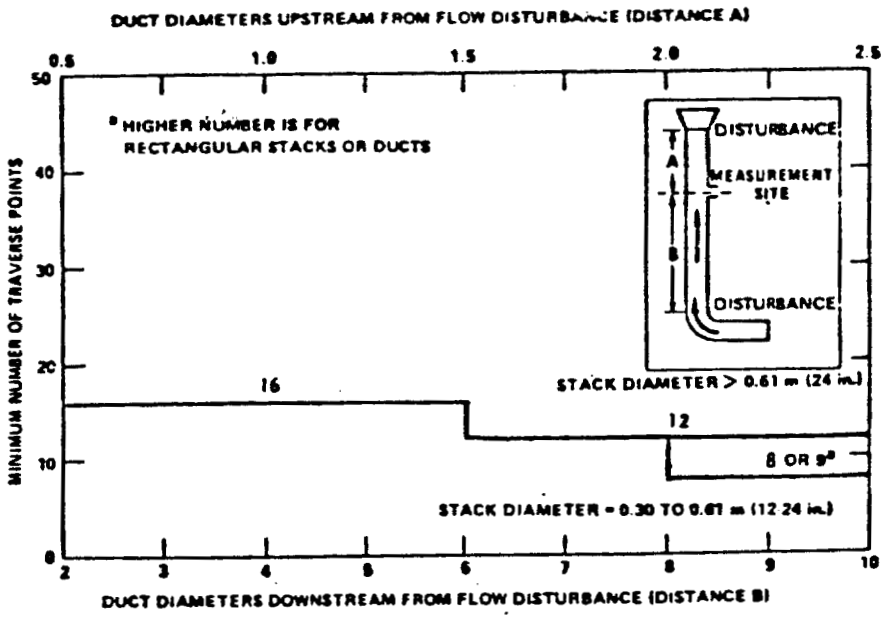

Minimum number of traverse points for velocity (nonparticulate) traverses.

METHOD 2 - STACK GAS VELOCITY AND VOLUMETRIC FLOW CALCULATIONS

Nomenclature.

A = Cross-sectional area of stack, m^2 (ft^2).
B_{ws} = Water vapor in the gas stream (from Method 5 or Reference Method 4), proportion by volume.
C_p = Pitot tube coefficient, dimensionless.
K_p = Pitot tube constant,

$$34.97 \frac{\text{m}}{\text{sec}} \left[\frac{(g/g\text{-mole})(\text{mm Hg})}{(°\text{K})(\text{mm } H_2O)}\right]^{1/2}$$

for the metric system and

$$85.49 \frac{\text{ft}}{\text{sec}} \left[\frac{(\text{lb/lb-mole})(\text{in. Hg})}{(°\text{R})(\text{in. } H_2O)}\right]^{1/2}$$

for the English system.

M_d = Molecular weight of stack gas, dry basis (see Section 3.6) g/g-mole (lb/lb-mole).
M_s = Molecular weight of stack gas, wet basis, g/g-mole (lb/lb-mole).
$= M_d\,(1-B_{ws}) + 18.0\,B_{ws}$

Equation 2-5

P_{bar} = Barometric pressure at measurement site, mm Hg (in. Hg).
P_g = Stack static pressure, mm Hg (in. Hg).

P_s = Absolute stack gas pressure, mm Hg (in. Hg).
$= P_{bar} + P_g$

Equation 2-6

P_{std} = Standard absolute pressure, 760 mm Hg (29.92 in. Hg).
Q_{sd} = Dry volumetric stack gas flow rate corrected to standard conditions, dscm/hr (dscf/hr).
t_s = Stack temperature, °C (°F).
T_s = Absolute stack temperature, °K, (°R).
$= 273 + t_s$ for metric

Equation 2-7

$= 460 + t_s$ for English

Equation 2-8

T_{std} = Standard absolute temperature, 293 °K (528° R)
v_s = Average stack gas velocity, m/sec (ft/sec).
Δp = Velocity head of stack gas, mm H_2O (in. H_2O).
3,600 = Conversion factor, sec/hr.
18.0 = Molecular weight of water, g/g-mole (lb/lb-mole).

5.2 Average stack gas velocity.

$$v_s = K_p C_p (\sqrt{\Delta p})_{avg} \sqrt{\frac{T_{s(avg)}}{P_s M_s}}$$

Equation 2-9

5.3 Average stack gas dry volumetric flow rate.

$$Q_{sd} = 3{,}600\,(1-B_{ws})\,v_s A \left(\frac{T_{std}}{T_{s(avg)}}\right)\left(\frac{P_s}{P_{std}}\right)$$

Equation 2-10

METHOD 3 - MOLECULAR WEIGHT AND EXCESS AIR CALCULATIONS

Nomenclature.

M_d = Dry molecular weight, g/g-mole (lb/lb-mole).
%EA = Percent excess air.
$\%CO_2$ = Percent CO_2 by volume (dry basis).
$\%O_2$ = Percent O_2 by volume (dry basis).
%CO = Percent CO by volume (dry basis).
$\%N_2$ = Percent N_2 by volume (dry basis).
0.264 = Ratio of O_2 to N_2 in air, v/v.
0.280 = Molecular weight of N_2 or CO, divided by 100.
0.320 = Molecular weight of O_2 divided by 100.
0.440 = Molecular weight of CO_2 divided by 100.

6.2 Percent Excess Air. Calculate the percent excess air (if applicable), by substituting the appropriate values of percent O_2, CO, and N_2 (obtained from Section 4.1.3 or 4.2.4) into Equation 3-1.

$$\%EA = \left[\frac{\%O_2 - 0.5\,\%CO}{0.264\,\%N_2 - (\%O_2 - 0.5\,\%CO)}\right] 100$$

Equation 3-1

NOTE: The equation above assumes that ambient air is used as the source of O_2 and that the fuel does not contain appreciable amounts of N_2 (as do coke oven or blast furnace gases). For those cases when appreciable amounts of N_2 are present (coal, oil, and natural gas do not contain appreciable amounts of N_2) or when oxygen enrichment is used, alternate methods, subject to approval of the Administrator, are required.

6.3 Dry Molecular Weight. Use Equation 3-2 to calculate the dry molecular weight of the stack gas

$$M_d = 0.440(\%CO_2) + 0.320(\%O_2) + 0.280(\%N_2 + \%CO)$$

Equation 3-2

METHOD 4 - STACK GAS MOISTURE CALCULATIONS

Nomenclature.

B_{ws} = Proportion of water vapor, by volume, in the gas stream.

M_w = Molecular weight of water, 18.0 g/g-mole (18.0 lb/lb-mole).

P_m = Absolute pressure (for this method, same as barometric pressure) at the dry gas meter, mm Hg (in. Hg).

P_{std} = Standard absolute pressure, 760 mm Hg (29.92 in. Hg).

R = Ideal gas constant, 0.06236 (mm Hg) (m^3)/(g-mole) (°K) for metric units and 21.85 (in. Hg) (ft^3)/(lb-mole) (°R) for English units.

T_m = Absolute temperature at meter, °K (°R).

T_{std} = Standard absolute temperature, 293° K (528°R).

V_m = Dry gas volume measured by dry gas meter, dcm (dcf).

ΔV_m = Incremental dry gas volume measured by dry gas meter at each traverse point, dcm (dcf).

$V_{m(std)}$ = Dry gas volume measured by the dry gas meter, corrected to standard conditions, dscm (dscf).

$V_{wc(std)}$ = Volume of water vapor condensed corrected to standard conditions, scm (scf).

$V_{wsg(std)}$ = Volume of water vapor collected in silica gel corrected to standard conditions, scm (scf).

V_f = Final volume of condenser water, ml.

V_i = Initial volume, if any, of condenser water, ml.

W_f = Final weight of silica gel or silica gel plus impinger, g.

W_i = Initial weight of silica gel or silica gel plus impinger, g.

Y = Dry gas meter calibration factor.

ρ_w = Density of water, 0.9982 g/ml (0.002201 lb/ml).

2.3.2 Volume of water vapor condensed.

$$V_{wc(std)} = \frac{(V_f - V_i)\rho_w R T_{std}}{P_{std} M_w} = K_1 (V_f - V_i)$$

Equation 4-1

where:

K_1 = 0.001333 m^3/ml for metric units
= 0.04707 ft^3/ml for English units

2.3.3 Volume of water vapor collected in silica gel.

$$V_{wsg(std)} = \frac{(W_f - W_i) R T_{std}}{P_{std} M_w} = K_2 (W_f - W_i)$$

Equation 4-2

where:

K_2 = 0.001335 m^3/g for metric units
= 0.04715 ft^3/g for English units

2.3.4 Sample gas volume.

$$V_{m(std)} = V_m Y \frac{(P_m)(T_{std})}{(P_{std})(T_m)} = K_3 Y \frac{V_m P_m}{T_m}$$

Equation 4-3

where:

K_3 = 0.3858 °K/mm Hg for metric units
= 17.64 °R/in. Hg for English units

NOTE: If the post-test lead rate (Section 2.2.6) exceeds the allowable rate, correct the value of V_m in Equation 4-3, as described in Section 6.3 of Method 5.

2.3.5 Moisture Content.

$$B_{ws} = \frac{V_{wc(std)} + V_{wsg(std)}}{V_{wc(std)} + V_{wsg(std)} + V_{m(std)}}$$

Equation 4-4

NOTE: In saturated or moisture droplet-laden gas streams, two calculations of the moisture content of the stack gas shall be made, one using a value based upon the saturated conditions (see Section 1.2), and another based upon the results of the impinger analysis. The lower of these two values of B_{ws} shall be considered correct.

METHOD 5 - PARTICULATE EMISSION CONCENTRATION CALCULATIONS - (1)

Nomenclature

A_n = Cross-sectional area of nozzle, m² (ft²).
B_{ws} = Water vapor in the gas stream, proportion by volume.
C_a = Acetone blank residue concentration, mg/g.
c_s = Concentration of particulate matter in stack gas, dry basis, corrected to standard conditions, g/dscm (g/dscf).
I = Percent of isokinetic sampling.
L_a = Maximum acceptable leakage rate for either a pretest leak check or for a leak check following a component change; equal to 0.0057 m³/min (0.02 cfm) or 4 percent of the average sampling rate, whichever is less.
L_i = Individual leakage rate observed during the leak check conducted prior to the "i^{th}" component change (i=1, 2, 3....n), m³/min (cfm).
L_p = Leakage rate observed during the post-test leak check, m³/min (cfm).
m_n = Total amount of particulate matter collected, mg.
M_w = Molecular weight of water, 18.0 g/g-mole (18.0lb/lb-mole).
m_a = Mass of residue of acteone after evaporation, mg.
P_{bar} = Barometric pressure at the sampling site, mm Hg (in. Hg).
P_s = Absolute stack gas pressure, mm Hg (in. Hg).
P_{std} = Standard absolute pressure, 760 mm Hg (29.92 in. Hg).
R = Ideal gas constant, 0.06236 mm Hg-m³/°K-g-mole (21.85 in. Hg-ft³/°R-lb-mole).
T_m = Absolute average dry gas meter temperature (see Figure 5-2), °K (°R).
T_s = Absolute average stack gas temperature (see Figure 5-2), °K (°R).
T_{std} = Standard absolute temperature, 293° K (528° R).
V_a = Volume of acetone blank, ml.
V_{aw} = Volume of acetone used in wash, ml.
V_{lc} = Total volume of liquid collected in impingers and silica gel (see Figure 5-3), ml.
V_m = Volume of gas sample as measured by dry gas meter, dcm (dscf).
$V_{m(std)}$ = Volume of gas sample measured by the dry gas meter, corrected to standard conditions, dscm (dscf).
$V_{w(std)}$ = Volume of water vapor in the gas sample, corrected to standard conditions, scm (scf).
v_s = Stack gas velocity, calculated by Method 2, Equation 2-9, using data obtained from Method 5, m/sec (ft/sec).
W_a = Weight of residue in acetone wash, mg.
Y = Dry gas meter calibration factor.
ΔH = Average pressure differential across the orifice meter (see Figure 5-2), mm H_2O (in. H_2O).
ρ_a = Density of acetone, mg/ml (see label on bottle).
ρ_w = Density of water, 0.9982 g/ml (0.002201 lb/ml).
θ = Total sampling time, min.
θ_1 = Sampling time interval, from the beginning of a run until the first component change, min.
θ_i = Sampling time interval, between two successive component changes, beginning with the interval between the first and second changes, min.
θ_p = Sampling time interval, from the final (n^{th}) component change until the end of the sampling run, min.
13.6 = Specific gravity of mercury.
60 = Sec/min.
100 = Conversion to percent.

6.2 Average dry gas meter temperature and average orifice pressure drop. See data sheet (Figure 5-2).

6.3 Dry Gas Volume. Correct the sample volume measured by the dry gas meter to standard conditions (20° C, 760 mm Hg or 68° F, 29.92 in. Hg) by using Equation 5-1.

$$V_{m(std)} = V_m Y \left(\frac{T_{std}}{T_m}\right)\left[\frac{P_{bar} + \frac{\Delta H}{13.6}}{P_{std}}\right]$$

$$= K_1 V_m Y \frac{P_{bar} + (\Delta H/13.6)}{T_m}$$

Equation 5-1

where;
K_1 = 0.3858 °K/mm Hg for metric units
= 17.64 °R/in. Hg for English units

NOTE: Equation 5-1 can be used as written unless the leakage rate observed during any of the mandatory leak checks (i.e., the post-test leak check or leak checks conducted prior to component changes) exceeds L_a. If L_p or L_i exceeds L_a, Equation 5-1 must be modified as follows:

(a) Case I. No component changes made during sampling run. In this case, replace V_m in Equation 5-1 with the expression:

$$V_m - (L_p - L_a)\theta]$$

(b) Case II. One or more component changes made during the sampling run. In this case, replace V_m in Equation 5-1 by the expression:

$$\left[V_m - (L_1 - L_a)\theta_1 - \sum_{i=2}^{n} (L_i - L_a)\theta_i - (L_p - L_a)\theta_p\right]$$

METHOD 5 - PARTICULATE EMISSION CONCENTRATION CALCULATIONS - (2)

and substitute only for those leakage rates (L_i or L_p) which exceed L_a.

6.4 Volume of water vapor.

$$V_{wc(std)} = V_{1c}\left(\frac{\rho_w}{M_w}\right)\left(\frac{RT_{std}}{P_{std}}\right) = K_2 V_{1c}$$

Equation 5-2

where:
K_2=0.001333 m³/ml for metric units
=0.04707 ft³/ml for English units.

6.5 Moisture Content.

$$B_{ws} = \frac{V_{wc(std)}}{V_{m(std)} + V_{wc(std)}}$$

Equation 5-3

NOTE: In saturated or water droplet-laden gas streams, two calculations of the moisture content of the stack gas shall be made, one from the impinger analysis (Equation 5-3), and a second from the assumption of saturated conditions. The lower of the two values of B_w shall be considered correct. The procedure for determining the moisture content based upon assumption of saturated conditions is given in the Note of Section 1.2 of Method 4. For the purposes of this method, the average stack gas temperature from Figure 5-2 may be used to make this determination, provided that the accuracy of the in-stack temperature sensor is ±1° C (2° F).

6.6 Acetone Blank Concentration.

$$C_a = \frac{m_a}{V_a \rho_a}$$

Equation 5-4

6.7 Acetone Wash Blank.

$$W_a = C_a V_{aw} \rho_a$$

Equation 5-5

6.8 Total Particulate Weight. Determine the total particulate catch from the sum of the weights obtained from containers 1 and 2 less the acetone blank (see Figure 5-3).

NOTE: Refer to Section 4.1.5 to assist in calculation of results involving two or more filter assemblies or two or more sampling trains.

6.9 Particulate Concentration.

$$c_s = (0.001\ g/mg)\ (m_n / V_{m(std)})$$

Equation 5-6

6.10 Conversion Factors:

From	To	Multiply by
scf	m³	0.02832
g/ft³	gr/ft³	15.43
g/ft³	lb/ft³	$2.205 \cdot 10^{-3}$
g/ft³	g/m³	35.31

6.11 Isokinetic Varition.

6.11.1 Calculation From Raw Data.

$$I = \frac{100\, T_s [K_3 V_{1c} + (V_m / T_m)(P_{bar} + \Delta H/13.6)]}{60\, \theta v_s P_s A_n}$$

Equation 5-7

where:
K_3=0.003454 mm Hg-m³/ml K for metric units.
=0.002669-in. Hg-ft³/ml-°R for English units.

6.11.2 Calculation From Intermediate Values.

$$I = \frac{T_s V_{m(std)} P_{std} 100}{T_{std} v_s \theta A_n P_s 60(1 - B_{ws})}$$

$$= K_4 \frac{T_s V_{m(std)}}{P_s V_s A_n \theta (1 - B_{ws})}$$

Equation 5-8

where:
K_4=4.320 for metric units
=0.09450 for English units.

6.12 Acceptable Results. If 90 percent I <110< percent, the results are acceptable. If the results are low in comparison to the standard and I is beyond the acceptable range, or, if I is less than 90 percent, the Administrator may opt to accept the results.

SAMPLE CALCULATION SHEET

Client: LAKesid _____ Run #: 1 Date: 9/10/85

Particulate concentration

Vm = 17.647* 57.566 * 1.01 *(29.53 + (1.68/13.6))/(72.5+460) Equation 5-1

Vm = 57.132 dscf

Wa = ma*vaw/va Substitution of Equation 5-4 into 5-5

Wa = .2 * 140 / 100

Wa = .28 mg

mn = (net weight filter catch) + (net weight "B" section) - Wa + (Backhalf)

mn = 13.0 mg = 11.1 + 2.2 - .3 + N/A

cs = [(0.001g/mg)*(15.43gr/ft)* 13.0 / 57.132 Equation 5-6

cs = .0035 gr/dscf or N/A gr/dscf@12% CO2 = cs * 12% / N/A %

Moisture

Vw(std) = 0.04707* 9.71 ml or grams of water condensed + Equation 5-2
.04715 x .46 g of H_2O in silica gel

Vw(std) = 10.1726 scf

Bws = (10.1726)/(10.1726 + 57.132) Equation 5-3

Bws = .1511 %H2O = 15.11 %

Molecular weight

Md = 0.440(3.4) + 0.320(14.6) + 0.280(82) Equation 3-2

Md = 29.128 g/g-mole

Ms = 29.128 * (1 - .1511) + 18.0 * .1511

Ms = 27.45 g/g-mole

Stack gas velocity and volumetric flow rate

vs = 85.49* .845 * .9358 * $\sqrt{710.9 / 27.45 / 29.57}$ Equation 2-9

vs = 63.25 ft/sec (std) or 61.14 afps = 2.9* .9358 * .845 * $\sqrt{710.9}$ (apx.)

Qsd = 3600*(1-.1511)* 63.26 * 13.458 *(528 / 710.9)*(29.57 / 29.92) Equation 2-10

Qsd = 1909,500 dscf/hr / 60 min/hr

Qsd = 31825 dscf/min or 49371 acfm = 61.14 afps* 13.458 sf* _____ 60 (apx.)

Isokinetic variation

I = 0.09450* 57.132 * 710.9 / (60 * 29.57 * 63.25 * .0004035 *(1- .1511)) Equation 5-8

I = 99.8 %

* All of the above equations are from the 40CFR60 and assume English units.

am test inc.
4900 9TH AVENUE N.W., • SEATTLE, WASHINGTON 98107-3697 • 206/783-4700

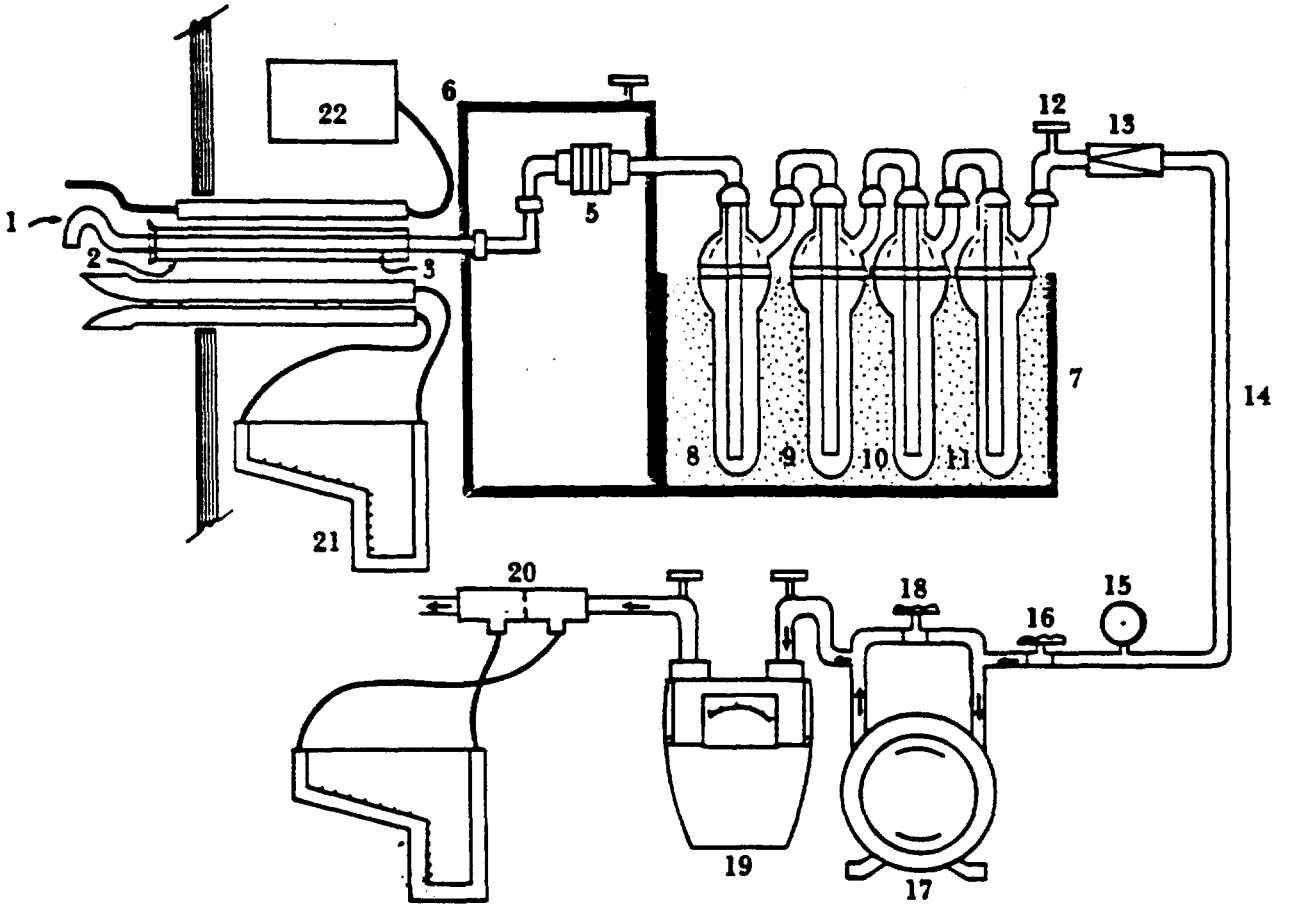

Figure 1. EPA Method 5 particulate sampling train

1. Sampling nozzle
2. Sampling probe sheath
3. Heated sample probe liner
4. Cyclone assembly (proposed regulations do not require this cyclone)
5. Out of stack filter assembly
6. Heated filter compartment maintained 120 °C ± 14 °C (248 °F ± 25 °F) (or temperature specified in 40CFR subpart)
7. Impinger case
8. First impinger filled with H_2O (100 ml)
9. Greenburg-Smith (or modified Greenburg-Smith) impinger filled with H_2O (100 ml)
10. Third impinger – dry
11. Fourth impinger – filled with H_2O absorption media (200-300 gm)
12. Impinger exit gas thermometer
13. Check valve to prevent back pressure
14. Umbilical cord – vacuum line
15. Pressure gage
16. Coarse adjustment valve
17. Leak free pump
18. By-pass valve
19. Dry gas meter with inlet and outlet dry gas meter thermometer
20. Orifice meter with manometer
21. Type S pitot tube with manometer
22. Stack temperature sensor

am test inc.

4900 9TH AVENUE N.W., • SEATTLE, WASHINGTON 98107-3697 • 206/783-4700

JAMES A. GUENTHOER

PROJECT ENGINEER

EDUCATION

- B.S., Geology, Juniata College, Huntington, Pennsylvania, 1972
- Currently completing M.S.E. program, Environmental Engineering Division, Department of Civil Engineering, University of Washington, Seattle, Washington
- Professional training courses and specialty conferences

PROFESSIONAL MEMBERSHIPS

- Air Pollution Control Association (national and local)
- Technical Association of the Pulp and Paper Industry
- American Institution of Chemical Engineers

PROFESSIONAL EXPERIENCE

Mr. Guenthoer has been a Project Engineer for Am Test, Inc. for the past year and a half. Mr. Guenthoer specializes in particle sizing and other air pollution engineering studies. He is also the Operating Manager for Pollution Control Systems, Inc. of Seattle, Washington. Mr. Guenthoer has been with Pollution Control Systems for 3 years and handles the design, technical services and sales of in-stack source test Cascade impactors. He assists in the instruction of EPA 450 and EPA 468 Source Sampling Short Courses for particulate and gaseous pollutants which are offered each year by the EPA in cooperation with the University of Washington. He also assists in instructing workshops to demonstrate the use of in-stack source test Cascade impactors. Mr. Guenthoer has had 10 years of professional experience, and is an Engineer in Training (EIT) and working towards a Professional Engineer Certification (P.E.).

Mr. Guenthoer was formerly associated with Air Pollution Systems of Kent, Washington conducting research and development studies on novel particulate control technology. Prior to his association with Air Pollution Systems, Mr. Guenthoer was the Testing Manager for Rossnagel and Associates of Medford, New Jersey and was in charge of all water quality, industrial hygiene, and source testing for 3 branch offices. During his 5 years with this environmental testing firm, Mr. Guenthoer conducted compliance source tests for local, state and federal government in over 20 states and served as a professional expert witness in environmental legal cases. Other professional experience with the State of Washington's Department of Ecology involved surface water quality studies. Mr. Guenthoer was also involved in statewide limnological investigations and bathymetric mapping over a period of 2 years with the United States Geological Survey in Tacoma, Washington.

QUALITY CONTROL PROGRAM (CONTINUED)

RECOVERY

"Spiked" samples or NBS certified matrix standards are run with the sample analyses to determine recovery data and matrix effects.

STANDARD CURVES

With each analysis, a minimum of three standards are run in conjunction with the samples to provide a working standard curve. The samples are quantitated using values obtained from their concurrently developed standard curve. The standard curve also functions as a check on the proper operation of the analytical instrument, the viability of the procedure for that parameter, and as a method for determining the linear range of the analysis. Samples are diluted or concentrated when necessary to fall within the limits of the standard curve.

Pressure - Out + Impulse - By Eliminated Diameter to Big Jacket

D) Jacket = 57.566 × [illegible] × 29.53 = [illegible] lb-ft/sec

Jacket 29.92 [illegible]

6

94.8

$$\frac{[(.02369)(216.1) + (57.566/532.5)]}{60(60)(29.57)(.00041)}$$

I $$\frac{(.41)(2.982)(29.92)(100)}{(550)(32.07)(.00041)(29.57)(60)(60)(.97)}$$

58.908 [illegible] = 56.17

54

56.17

= 0.17

56.17

6 6 52

705

2

56.17

Sabreide Industries - Port Angeles
Source Test Observation Checklist
Asphalt Batch Plants

Process Asphalt Concrete Batch Plant

Asphalt Paving Plant CMI

Drum Mix Description

Identification No. SN ST 400-123 Model ST400 Installed P.A. 5/85

Process Rate (Max 250-275) (M.D.O. 260 with some Bunker Oil) Tons/hr Firing Rate 368 Gal/hr

Type of Fuel Diesel #2 (Lime Oil, Union, Pac N. oil) Smoke Point optional

Injection Location

Asphalt Discharge Temp. 310 °F Gravel Moisture 3 to 8 %

Fines In Gravel (<200 mesh) 6% (last test 9/3/85)

Operation Personnel Bob Dutrow

Asphalt Supplier U.S. Oil

Density optional — #/gal Flash Point 440 min optional °F

Control Equipment

Description or Name Astec Bag House, Rebagged 9/85, Reversed Air Cleaned, 924 bags, 28 sections w bags per section

Water Press PSI Rate Gal/min

Water: Reused, Clean?

Venturi Press ΔP = Inch -6.1" H2O Clean

Static = Inch ⊖ -1.2" H2O Dirty

Air Flow Method 5 test ⊕ 4.9" H2O

Saturated Stack

VISUAL EMISSION READINGS

Source: Lakeside Industries - Port Angeles

Hour 0800 Date 9/10/85

Run # 1

Min.	0	1/4	1/2	3/4	Min.	0	1/4	1/2	3/4
0					30				
1					31				
2					32				
3					33				
4					34				
5					35				
6					36				
7					37				
8					38				
9					39				
10					40				
11					41				
12					42				
13					43				
14					44				
15					45				
16					46				
17					47				
18					48				
19					49				
20					50				
21					51				
22					52				
23					53	0	0	0	0
24					54	0	0	0	0
25					55	0	0	0	0
26					56	0	0	0	0
27					57	0	0	0	0
28					58	0	0	0	0
29					59	0	0	0	0

CALCULATIONS

No. of Readings=

____ 40% + Opacity

____ 35%

____ 30%

____ 25%

____ 20%

____ 15%

____ 10%

____ 5%

____ 0%

28/4= [redacted] 7

7 Minutes > ____ Opacity

Color of Plume Clear

Plume Appearance Detached — Wet ____ Dry X

By James P Werner
Qualified Plume Observer

VISUAL EMISSION READINGS

Source: Lakeside Industries - Port Angeles

Hour 1100 Date 9/10/85

Run #2

Min.	0	1/4	1/2	3/4	Min.	0	1/4	1/2	3/4
0					30				
1					31				
2					32	0	0	0	0
3					33	0	0	0	0
4					34	0	0	0	0
5					35	0	0	0	0
6					36	0	0	0	0
7					37	0	0	0	0
8					38	0	0	0	0
9					39	0	0	0	0
10					40	0	0	0	0
11					41				
12					42				
13					43				
14					44				
15					45				
16					46				
17					47				
18					48				
19					49				
20					50				
21					51				
22					52				
23					53				
24					54				
25					55				
26					56				
27					57				
28					58				
29					59				

CALCULATIONS

No. of Readings=

_____ 40% + Opacity

_____ 35%

_____ 30%

_____ 25%

_____ 20%

_____ 15%

_____ 10%

_____ 5%

_____ 0%

_____/4= _____

_____Minutes > _____Opacity

Color of Plume clear

Plume Appearance _____ Wet ✓ Dry

Green tree used for background

Ambient Temp. = 60°F

Wind Speed = 1-3 mph

By James L. Werner
Qualified Plume Observer

VISUAL EMISSION READINGS

Source: Lakeside Industries

Hour 1500 Date 9/10/85

Run #3

Min.	0	1/4	1/2	3/4	Min.	0	1/4	1/2	3/4
0					30				
1					31				
2					32				
3					33				
4					34				
5					35				
6					36				
7					37				
8					38				
9					39				
10					40				
11					41				
12					42				
13					43				
14					44				
15	0	0	0	0	45				
16	0	0	0	0	46				
17	0	0	0	0	47	0	0	0	0
18	0	0	0	0	48	0	0	0	0
19	0	0	0	0	49				
20	0	0	0	0	50				
21	0	0	0	0	51				
22					52				
23					53				
24					54				
25					55				
26					56				
27					57				
28					58				
29					59				

CALCULATIONS

No. of Readings=

_____ 40% + Opacity

_____ 35%

_____ 30%

_____ 25%

_____ 20%

_____ 15%

_____ 10%

_____ 5%

_____ 0%

_____/4= _____

_____Minutes > _____Opacity

Color of Plume Clear

Plume Appearance _____ Wet X Dry

Blue Sky For Background
Wind Speed 1-3 mph
66°F

By Jack P. Warner
Qualified Plume Observer

Direction to stack = North

am test inc.
4900 9TH AVENUE N.W., • SEATTLE, WASHINGTON 98107-3697 • 206/783-4700

Lab #95743

TRAVERSE SAMPLING DATA

Client LAKESIDE IND (P.A)
Date 9-10-85
Sample Location Baghouse Stack
Operators JAO
Sample Box # 1
Run# 1

EQUIPMENT CHECKS

Initial/Final

Leak Rate Cfm 0.005 / 0.005
Leak Test Vac 25 / 24
✓ Pitots, Pretest
✓ Pitots, Postest
✓ Orsat Sampling System
✓ Tedlar Bag
✓ Thermocouple @ ____ °F

SCHEMATIC TRAVERSE LAYOUT

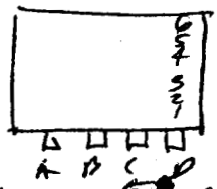

Stack Diameter 54 x 38
Distance Upstream 4 ft.
Distance Downstream 8 ft.

Filter #12024 tare ____ mgs

	Final Wt.		Initial Wt.		Net Wt.
#1 Bubbler	739.9	-	573.4	=	166.5
#2 Impinger	612.6	-	578.5	=	34.1
#3 Bubbler	476.0	-	470.3	=	5.7
#4 Silica Gel	763.4	-	753.6	=	9.8

TOTAL WATER VOLUME 216.1

Start Time 0753
Stop Time 0908
Barometric Pressure "Hg 29.53 (750 mm Hg)
Static Pres "H_2O -1.5
Production Rate ____

NOMOGRAPH SETUP

% Moisture 15
Meter Temp. 65
Stack Temp. 260
$\Delta H@$ .1944 Y 1.01
Pitot# 42 Side# A
Cp .845
Nozzle Diameter .272
C Factor ____
Reference ΔP ____

Sample Point	Elap Time Min.	Dry Gas Meter Reading Cu. Ft.	Pitot Reading (ΔP), In. H_2O	Orifice Setting (ΔH), In H_2O Ideal	Actual	Gas Meter Temp °F In	Out	Pump Vacuum In. Hg Guage	Filter Box Temp °F	Imp. Exit Temp °F	Stack Temp °F	Opacity or Orsat Values
A 1	0	746.702	.60	1.09	1.09	61	60	5	225	52	265	
2			.70	1.26	1.26	63	60	6	238	51	265	
3	5		.70	1.26	1.26	64	61	6	245	54	264	
4			.70	1.26	1.26	65	61	6	254	50	261	
5	10		.75	1.35	1.35	67	61	7	260	52	263	
6			.60	1.09	1.09	68	62	6	263	55	254	
B 1	15		.80	1.26	1.26	69	63	7	270	64	250	
2			.90	1.62	1.62	72	65	10	272	54	258	
3	20		.90	1.62	1.62	72	65	10	270	44	255	
4			.90	1.62	1.62	75	66	10	271	46	253	
5	25		1.0	1.86	1.86	80	69	11½	270	44	250	
6			1.0	1.86	1.86	81	69	11½	270	44	251	
C 1	30		.95	1.77	1.77	77	71	10½	270	60	249	
2			.95	1.77	1.77	79	72	10½	271	61	247	
3	35		.95	1.77	1.77	81	72	10½	270	60	245	
4			.90	1.71	1.71	83	73	10	270	60	243	
5	40		1.0	1.90	1.90	84	74	11½	271	61	239	
6			1.0	1.90	1.90	84	75	11½	269	61	244	
D 1	45		.90	1.71	1.71	75	76	10	268	65	243	
2			.90	1.71	1.71	79	76	10	267	62	240	
3	50		.95	1.80	1.80	82	76	10½	256	65	239	
4			1.0	1.90	1.90	83	77	11½	271	65	218	
5	55		1.1	2.09	2.09	85	77	14	271	67	246	
6			1.1	2.09	2.09	86	78	14	45	68	244	
	60	746.268										

57.566 .935 (Cp)(Cp)

1.64 72.5 251

am test inc.
4900 9TH AVENUE N.W., • SEATTLE, WASHINGTON 98107-3697 • 206/783-4700

Lab # 95744

TRAVERSE SAMPLING DATA

Page 1 of _____

Client Lakeside Ind. (P.A.)
Date 9-10-85
Sample Location Baghouse Stack
Operators JRG
Sample Box # 1
Run# 2

SCHEMATIC TRAVERSE LAYOUT

Stack Diameter _____
Distance Upstream _____
Distance Downstream _____

Start Time 1110
Stop Time 1230
Barometric Pressure "Hg 29.57
Static Pres" H_2O +.50
Production Rate _____

EQUIPMENT CHECKS

	Initial	Final
Leak Rate Cfm	<.005	<.01
Leak Test Vac	24	20

✓ Pitots, Pretest
✓ Pitots, Postest
✓ Orsat Sampling System
✓ Tedlar Bag
✓ Thermocouple @ _____ °F

Filter # 125025 tare _____ mgs

	Final Wt.	Initial Wt.	Net Wt.
#1 Bubbler	774.4	596.8	177.6
#2 Impinger	646.3	585.5	60.8
#3 Bubbler	483.5	477.7	5.8
#4 Silica Gel	714.3	699.8	14.5

TOTAL WATER VOLUME 258.7

NOMOGRAPH SETUP

% Moisture _____
Meter Temp. _____
Stack Temp. _____
ΔH@ _____ Y _____
Pitot# _____ Side# _____
Cp .845
Nozzle Diameter .272
C Factor _____
Reference ΔP _____

Sample Point	Elap Time Min.	Dry Gas Meter Reading Cu. Ft.	Pitot Reading (ΔP), In. H_2O	Orifice Setting (ΔH), In H_2O Ideal	Orifice Setting (ΔH), In H_2O Actual	Gas Meter Temp °F In	Gas Meter Temp °F Out	Pump Vacuum In. Hg Guage	Filter Box Temp °F	Imp. Exit Temp °F	Stack Temp °F	Opacity or Orsat Values
D1	0	798.692	.90	1.71	1.71	72	72	5	260	55	240	
2			.90	1.71	1.71	73	72	5	260	48	235	
3	5		1.0	1.93	1.93	76	72	5½	290	50	230	
4			1.1	2.12	2.12	78	72	6	230	52	228	
5	10		1.25	2.41	2.41	80	73	7	228	55	228	
6			1.25	2.41	2.41	81	73	7	230	55	227	
C 1	15		.80	1.52	1.52	78	74	4	259	61	243	
2			.90	1.71	1.71	79	74	5	260	60	242	
3	20		.90	1.71	1.71	81	74	5	270	59	243	
4			.95	1.80	1.80	82	75	5	268	62	242	
5	25		1.05	1.99	1.99	83	75	6	265	60	247	
6			1.05	1.99	1.99	84	75	6	265	59	244	
B 1	30		.90	1.71	1.71	81	77	6	260	59	245	
2			.90	1.71	1.71	82	77	6	260	58	250	
3	35		.80	1.52	1.52	85	78	4½	270	59	254	
4			.80	1.52	1.52	86	78	4½	270	60	253	
5	40		.90	1.71	1.71	86	78	5	265	59	253	
6			.90	1.71	1.71	87	78	5	263	58	253	
A 1	45		.60	1.13	1.13	82	79	3	265	57	254	
2			.65	1.23	1.23	83	79	3½	260	56	255	
3	50		.65	1.23	1.23	83	79	3½	260	55	251	
4			.50	.94	.94	84	79	3	260	55	255	
5	55		.60	1.13	1.13	84	79	3½	262	55	251	
6			.60	1.13	1.13	85	80	3½	263	56	252	
	60	857.600	.924	1.45		79				245		

58.908

.0126

am test inc.
4900 9TH AVENUE N.W., • SEATTLE, WASHINGTON 98107-3697 • 206/783-4700

Lab# 95745

TRAVERSE SAMPLING DATA

Page 1 of _____

Client LAKESIDE IND (P.A.)
Date
Sample Location
Operators
Sample Box #
Run# 3

SCHEMATIC TRAVERSE LAYOUT

Stack Diameter
Distance Upstream
Distance Downstream

Start Time 1447
Stop Time 1605
Barometric Pressure "Hg 29.59
Static Pres" H_2O -.50
Production Rate

EQUIPMENT CHECKS

Initial/Final

Leak Rate Cfm <.01 / <.005
Leak Test Vac 24 / 21
✓ Pitots, Pretest
✓ Pitots, Postest
✓ Orsat Sampling System
✓ Tedlar Bag
Thermocouple @ _____ °F

Filter #25026 tare _____ mgs

	Final Wt.		Initial Wt.		Net Wt.
#1 Bubbler	758.7	-	570.3	=	
#2 Impinger	628.2	-	579.1	=	
#3 Bubbler	471.6	-	463.7	=	
#4 Silica Gel	763.0	-	755.2	=	

TOTAL WATER VOLUME 253.7

NOMOGRAPH SETUP

% Moisture
Meter Temp.
Stack Temp.
ΔH@ _____ Y
Pitot# _____ Side#
Cp .845
Nozzle Diameter .272
C Factor
Reference ΔP

Sample Point	Elap Time Min.	Dry Gas Meter Reading Cu. Ft.	Pitot Reading (ΔP), In. H_2O	Orifice Setting (ΔH), In H_2O Ideal	Orifice Setting (ΔH), In H_2O Actual	Gas Meter Temp °F In	Gas Meter Temp °F Out	Pump Vacuum In. Hg Guage	Filter Box Temp °F	Imp. Exit Temp °F	Stack Temp °F	Opacity or Orsat Values
A 1	0	858.1[illegible]	.70	1.36	1.36	78	77	3	260	55	232	
2			.70	1.36	1.36	80	77	3	260	50	234	
3	5		.50	.97	.97	81	77	2	261	48	234	
4			.60	1.17	1.17	82	77	3	262	47	235	
5	10		.60	1.17	1.17	83	78	3	262	47	236	
6			.65	1.27	1.27	84	79	3½	262	47	236	
B 1	15		.75	1.46	1.46	82	80	3½	268	50	235	
2			.80	1.56	1.56	83	80	4	268	51	236	
3	20		.80	1.56	1.56	86	80	4	269	46	233	
4			.90	1.75	1.75	88	81	4½	269	47	235	
5	25		1.0	1.95	1.95	89	81	5	269	49	233	
6			1.05	2.04	2.04	90	82	5	268	50	233	
C 1	30		.70	1.36	1.36	88	83	3	272	59	234	
2			.70	1.36	1.36	89	83	3	270	57	234	
3	35		.75	1.46	1.46	90	84	3½	271	53	237	
4			.90	1.75	1.75	91	85	5	270	54	240	
5	40		1.05	2.03	2.03	94	85	5½	271	57	242	
6			1.1	2.13	2.13	95	86	6	270	57	241	
D 1	45		.95	1.84	1.84	91	87	5	272	66	241	
2			.95	1.84	1.84	92	88	5	270	58	241	
3	50		1.1	2.13	2.13	95	88	5½	256	59	248	
4			1.2	2.32	2.32	96	88	6	250	59	248	
5	55		1.45	2.81	2.81	97	89	7	230	60	245	
6			1.45	2.81	2.81	98	90	7	227	65	244	
	60	917.937										
		59.837	.934		1.73		85.5				238	
											.0056	