Note: This is a reference cited in *AP 42, Compilation of Air Pollutant Emission Factors, Volume I Stationary Point and Area Sources.* AP42 is located on the EPA web site at www.epa.gov/ttn/chief/ap42/

The file name refers to the reference number, the AP42 chapter and section. The file name "ref02_c01s02.pdf" would mean the reference is from AP42 chapter 1 section 2. The reference may be from a previous version of the section and no longer cited. The primary source should always be checked.

Commonwealth of Pennsylvania
Environmental Resources
December 18, 1991

Subject: Stack Test Review

To: Data File
James Julian, Inc.
Perry Township, Snyder County

From: Jaydeb Pal
Air Pollution Control Engineer
Division of Technical Services
and Monitoring
Bureau of Air Quality Control

Through: Chief, Source Testing and Monitoring Section

James Julian, Inc. operates a Boeing MS600 drum mix asphalt plant rated at 600 tons per hour at the aforementioned location. The exhaust gas from the dryer is ducted to a Boeing VS600 venturi scrubber and a demister before being discharged to the atmosphere through a 56-inch inside diameter stack having an exit point 30 feet above grade.

Three particulate and three VOC tests were performed in the exhaust stack by the personnel of Hanson Environmental Corporation to demonstrate compliance with the conditions of Plan Approval No. 55-303-002. All tests were conducted in accordance with a preapproved test protocol and are acceptable to the Department.

Following are the comments on Richard Maxwell's questions in his cover memo dated December 2, 1991:

1. The back half particulate catch that was included in the particulate emission concentration and rate calculations constituted only 1% of the total particulate catch. Therefore, company's concern that the back half catch was a significant contribution to the particulate noncompliance is not true. Besides, it is the Department's policy to include the back half insoluble particulate for emission calculations.

2. The VOC concentrations reported in the report are different than those observed during the tests because the analyzer was calibrated with propane, and the values were recorded as propane during the tests, whereas the values in the report are reported as methane.

The following data was extracted from the test report:

Test run no.	1	2	3
Test date	10/16/91	10/16/91	10/16/91
Process rated production capacity (ton/hr.)	600	600	600
Production rate during test (ton/hr.)	389.2	398	400
Material produced during test	Heavy duty BCBC	Heavy duty BCBC	Heavy duty BCBC
Percent passing through 200 mesh	5.5	5.5	5.5
Volumetric flow rate (dscfm)	21999	27320	25859
Particulate emission concentration (gr./dscf)	0.072	0.077	0.093
Allowable particulate emission concentration (gr./dscf)	0.02	0.02	0.02
Particulate emission rate (lb./hr.)	13.6	18.1	20.6
VOC emission concentration, as methane (ppm)	270	248	246
VOC emission rate, as methane (lb./hr.)	14.8	16.9	15.9
VOC emission rate, as methane (lb./ton of production)	0.038	0.042	0.04
Allowable VOC emission rate (lb./ton of production)	0.07	0.07	0.07

cc: Richard L. Maxwell, Jr., Northcentral Regional Office
File No. 55-303-002
EPA/RSL
Reading File
Krishnan Ramamurthy, Central Office

JPrjr

COMMONWEALTH OF PENNSYLVANIA

December 2, 1991

SUBJECT: Stack Test Report Review
James Julian, Inc.
Perry Township, Snyder County
Plan Approval #55-303-002

TO: Rick St. Louis

FROM: Richard L. Maxwell, Jr.
Chief, Engineering Services
Air Quality Control
Northcentral Region

Attached is a copy of a test report submitted for particulate and VOC stack tests performed on James Julian's drum mix asphalt concrete plant by Ramcon on October 16, 1991. Would you please have someone on your staff review this report for Chapter 139 conformance, etc. (and could you please expedite this review, if at all possible).

Also attached is a copy of my test observation memo. Jay Paf was on-site during the testing.

This plant is subject to NSPS Subpart I (.04 grains/dscf) as well as to BAT-established particulate and VOC emission limitations of .02 grains/dscf and .07 pounds VOC/ton of asphalt concrete produced.

It should be noted that the plant operating parameter data sheet in the test report lists scrubber pressure drop readings throughout the entire test period. In fact, as noted on the data sheet itself, the scrubber magnehelic gauge was not working properly during the second and third tests so the pressure drop during these tests was not actually known.

In evaluating the report, I would appreciate specific comment on the following:

1. The test report cover letter implies that the back half catch was a significant contribution to the particulate noncompliance. My preliminary review, however, indicates otherwise.

2. The hydrocarbon concentrations reported in the report are significantly different than those Jay and I observed on-site (see his memo or mine). What is the explanation for this?

RLM/bls

Attachments

cc: File

RECEIVED
DEC 4 1991
DER AIR QUALITY CONTROL
DIV. OF TECH SERVICES

COMMONWEALTH OF PENNSYLVANIA

October 24, 1991

SUBJECT: James Julian, Inc.
Perry Township, Snyder County
Plan Approval 55-303-002

TO: Files

FROM: Richard L. Maxwell, Jr.
Chief, Engineering Services
Air Quality Control
Northcentral Region

On October 16, 1991, I observed the performance of particulate and Method 25A VOC testing being performed by Ramcon on James Julian's drum mix asphalt concrete plant. Jay Pai of the Source Testing Unit was also on-site during the first test run and approximately one-half of the second. The Ramcon test team of three was led by Ken Allmendinger. The James Julian representatives included Sam Powers and Ron McGuirk.

The plant was producing heavy duty BCBC at a production rate of just under 400 tons/hour. The BCBC, which contains 3.8% AC20 asphalt obtained from Sun Oil, is the only type of mix which will be produced this season. According to Ron McGuirk, the plant hasn't run above 400 tons/hour on this job yet although it has run in the 450-475 TPH range on other jobs (and has apparently run as high as 560 TPH under optimum conditions). The lower production rate on this job has not been due to any type of physical or material restriction; it is apparently the rate which allows the plant to run steadily rather than start and stop as it would have to if run at a higher rate.

As it had rained the previous day, the stone used earlier in the day was moister than that used later on.

Testing did not get underway until 11:14 due to a late arrival and setup by Ramcon. Despite the late start, the company expected to complete three runs by the end of the day (apparently, paving has been occurring on the job site until 5:00 p.m. or later). I observed runs 1 and 2 but left the site at 3:24 at the conclusion of the second run (after the leak check but prior to FID calibration).

The scrubber magnehelic gauge was relatively steady at approximately 14 inches of water column throughout the first test but at approximately the beginning of the second test (1:55), began fluctuating wildly and continued to do so throughout the remainder of the run (the gauge needle continuously "bounced" between approximately 7 and 12 inches of water). When I pointed this out to Sam Powers (at approximately 2:10), he speculated that the lines to the gauge might need to be blown out and stated that he had done

this the evening before in preparation for the testing. No attempt was however made to clear the lines after I spoke with Sam. I later (2:50) noted that Sam was marking pressure drop readings on the operating log that did not match the gauge. When I asked if he was merely assuming that the pressure drop readings were as he was marking them, his reply was affirmative. He appeared to be doing the same thing for scrubber water pressure since the needle of the water pressure gauge located at the scrubber pump was pinned above 100 psi throughout the testing (there was a second pressure gauge located at the end of the water line to the scrubber throat but I did not observe anyone climb up to observe it during the testing, nor did I). It should also be noted that although the plant production rate, mix temperature and dryer exhaust gas temperature were the same during the second test as they had been during the first, the burner setting was lower (apparently due to the use of drier stone).

While standing in the immediate vicinity of the plant, I could not detect any noticeable carryover from the scrubber plume after the point of steam dissipation (using an overcast sky as background). I left the site at 12:50 and again at 2:15 to observe the plant at a distance. I could, from this more remote vantage point, detect a barely noticeable carryover. I could also see some blue haze from the silo top (which could not be detected while on-site).

I observed that the leak during the final leak check on the second run was approximately .003 cfm at 5 inches Hg.

Other items of interest were:

- Ramcon had expected VOC concentrations of several hundred ppm and had selected the FID calibration gases for the first run accordingly. Due to the lower-than-expected concentrations actually occurring during the run (approximately 60 ppm), Jay had them recalibrate the FID prior to the commencement of the second run.

- The company has installed a flow meter (Badger Meter, Inc. XMTR Model PFT-4E) on the scrubber pump outlet since my 9/12/91 inspection.

- The plant was supposedly firing virgin #2 fuel oil. I did not take an oil sample.

- The plant is fed from the burner end and exhausted to the scrubber from the discharge end. The pickup box is relatively small.

- The asphalt injection line was noted to enter the dryer from the discharge end. I did not ask anyone its length.

- The dryer appeared to be equipped with a RAP ring but the plant is clearly not set up to process RAP.

- Much of the in-plant area has been covered with asphalt pavement.

- The aggregate feed system incorporates an open scalping screen with no water spray nozzles (nor do any nozzles exist on two prior conveyor transfer points). No dust was, however, observed from this area during the testing.

- The dirty scrubber water entering the port-a-pond system was being treated with a flocculant (alum).

- I noted that the aggregate mix was 17% AG1, 17% AG2, 20% AG3, and 46% AG4 earlier in the day, and 18% AG1, 19% AG2, 15% AG3, and 48% AG4 later on (I noted the change at 11:43).

RLM/bls

JAMES JULIAN

10/16/91

TIME		PRODUCTION # RATE	DRUM EXHAUST TEMP.	MIX TEMP.	BURNER SETTING	SCRUBBER ΔP	SCRUBBER FLOWRATE	HC CONC.	CO_2 CONC.	O_2 CONC.			
10:20	PLANT STARTED			UP									
10:32						14.5"	201 GPM						
10:38						15	200						
10:39		375 TPH	339°F	—	63%								
10:45						15.5	199						
10:48								84 ppm					
10:51						16.5	196						
10:53		390	349	303°F	60								
10:57						14.5	198						
11:06						14.5	197						
11:12						13.5-14	193						
11:14		381	331	285	60								
11:14	#1	TEST	STARTED										
11:16						14	199						
11:19	PLANT (& TEST) DOWN												
11:20	RESTART												
11:22		399	292	287									
11:25						15.5	194	73.6					
11:29						15.5	197						
11:32		391	361	303									
11:34						13-13.5	195						
11:35								61.6	7.9%	9.4%			
11:40						13.5	198						
11:43		393	309	284	68								
11:46						14.5	197						
11:47								69.3	9.5	7.3			
11:51						14-14.5	196						
11:52		389	318	289	63								
11:59						14.5	193						
12:00								66.1	8.8	8.1			
12:07						14-14.5	190						
12:08		394	315	287	62.5								

MIX

JAMES JULIAN

10/16/91

TIME		PRODUCTION # RATE	DRUM EXHAUST TEMP.	MIX TEMP.	BURNER SETTING	SCRUBBER Δp	SCRUBBER FLOWRATE	HC CONC.	CO_2 CONC.	O_2 CONC.			
12:12						15	194						
12:17								67.8	8.8	8.1			
12:19						15	195						
12:20		394	315	291	63								
12:24								71.0	8.6	8.3			
12:27						14.5-15	195						
12:31		393	328	296	62.5								
12:32						15.5-16	194						
12:35		#1 TEST OVER											
12:50		LEFT SITE											
1:25		BACK ON SITE - PLANT DOWN											
1:35		STARTING PLANT BACK UP.											
1:44						17	194						
1:49						13.5	196						
1:51		388	328	292	47.5								
1:55		#2 TEST STARTED											
1:55						BOUNCING	194						
2:01		395	324	293	42.5								
2:07								61.0	6.8	11.0			
2:08						BOUNCING							
2:09		402	334	295	50								
2:13								63.4	7.3	10.3			
2:28		402	313	293	42.5								
2:29						BOUNCING	188						
2:32								66.4	7.3	10.1			
2:33						BOUNCING	184						
2:38		399	326	301	47								
2:40						BOUNCING	188						
2:41								67.4	7.4	10.0			
2:47						BOUNCING	189						
2:48		396	309	289	37.5								
2:53						BOUNCING							

* MIX

JAMES JULIAN

10/16/91

TIME		PRODUCTION # RATE	DRUM EXHAUST TEMP.	MIX TEMP	BURNER SETING	SCRUBBER ΔP	SCRUBBER FLOWRATE	HC CONC.	CO_2 CONC	O_2 CONC.			
2:53		PLANT	DOWN (# TEST)										
3:02		PLANT	BACK UP										
3:02						BOUNCING	185						
3:06		TEST	RESTART					50.1	6.9	10.4			
3:08						BOUNCING	185						
3:09		396	337	289	50								
3:13						BOUNCING	187						
3:14								69.7	6.7	10.9			
3:19						BOUNCING	188						
3:21		399	317	291	40								
3:24		# 2 TEST OVER											

MIX

file
55-303-002

Commonwealth of Pennsylvania
Environmental Resources
October 22, 1991

RECEIVED
OCT 30 1991
DER-AIR QUALITY CONTROL
WILLIAMSPORT

Subject: Stack Test Observation

To: File No. 55-303-002
James Julian, Incorporated
Perry Township, Snyder County

From: Jaydeb Pai
Air Pollution Control Engineer
Division of Technical Services
and Monitoring
Bureau of Air Quality Control

Through: Chief, Source Testing and Monitoring Section

Three particulate and three EPA Method 25A VOC test runs were scheduled to be performed by the personnel of Ramcon Environmental Corporation on October 16, 1991, in the scrubber-demister exhaust stack of the Boeing MS600 drum mix asphalt plant at the aforementioned location. The purpose of these tests was to demonstrate compliance with the conditions of Plan Approval No. 55-303-002. I observed the first and portion of second test runs of each pollutant.

A standard EPA Method 5 sample train was used for each particulate test run. The train consisted of a stainless steel nozzle, a heated glass probe, and a heated glass fiber filter connected to an impinger train. Each of the first two impingers contained 100 ml of distilled water, the third was dry, and the fourth impinger contained silica gel. All impingers were placed in an ice bath. A Lear Siegler, Incorporated control console completed the sampling train. A 24-point velocity traverse was performed to determine the velocity profile. Initial leak check of each sample train was performed at 15-inch Hg vacuum. A 24-point sampling program with a sample period of 3 minutes per point was conducted for a total sample time of 72 minutes. At each point, clock time, dry gas meter reading, velocity head, orifice reading, pump vacuum, and stack, filter, impinger and meter temperatures were recorded. The sampling rate was adjusted to maintain isokinesis at each point. The final leak check of the sample train for the first test run was performed at the highest vacuum attained during the test. I was not present to observe the final leak check of the second test run.

The EPA Method 25A VOC tests were performed concurrently with the particulate tests. The sampling system consisted of a stainless steel probe with an in-stack filter, a heated teflon sample line, and a J.U.M. Engineering Model VE-7 total hydrocarbon analyzer. Emission concentration was recorded on a Molytek Model 2702 strip chart recorder and a digital readout system. The sampling system calibrations, and the zero and calibration drift checks for the first test run were performed by using zero gas and 239, 490 and

837 ppm propane. During the first test run, the average VOC emission concentration varied from approximately 65 to 70 ppm. The calibration gases for the second test run (zero gas, 31.1, 46.5 and 85.6 ppm propane) were selected to be in the range of this stack emission concentration.

CO_2 and O_2 were also analyzed continuously and incorporated into the aforementioned strip chart recorder and digital readout system. The analyzers were calibrated using known concentrations of cylinder gases.

Mr. Richard L. Maxwell, Jr. of Northcentral Regional Office monitored the process data during the tests.

The test that I observed were performed in accordance with the requirements of Chapter 139 of the Pennsylvania Department of Environmental Resources' Rules and Regulations and a pre-approved test protocol.

cc: Richard L. Maxwell, Jr., Northcentral Regional Office
Reading File

JPadlg

JAMES JULIAN, Inc.

405 SOUTH duPONT ROAD — ELSMERE, P.O. BOX 2538 — WILMINGTON, DELAWARE 19805
AREA CODE (302) 998-3391

GENERAL CONTRACTORS

JAMES JULIAN
CHAIRMAN OF THE BOARD

JOSEPH R. JULIAN
PRESIDENT

RECEIVED
DEC 9 1991
DER-AIR QUALITY
WILLIAMSPORT REGION

November 21, 1991

Mr. Richard L. Maxwell, Jr.
Commonwealth of Pennsylvania
Department of Environmental Resources

RE: Ramcon Environmental Corporation, Source Sampling Reports for particulate and total hydrocarbon emissions testing done on October 16, 1991 for James Julian, Inc., Boeing MS600 drum mix asphalt plant, Perry Township, Snyder County.

Dear Mr. Maxwell,

Please find enclosed, two copies of above referenced test reports, per condition #19 of the temporary operating permit.

As you will see, results from the total hydrocarbon emissions were well within the allowable limits of .07 pounds per ton of asphalt concrete produced, but unfortunately, results for particulate emissions were very disappointing and well outside of the .02 gr./DSCF required per condition #3.

I feel that the test results were not consistent with what I had expected, in regards to previous stack testing done on this plant in the past. In reviewing the results and trying to understand the reasons for such a difference, I would like to comment on the following. In previous stack tests for the states of Maryland and Delaware, we were permitted to change pond water for the test, just prior to testing. This was probably very crucial (condition #16) because the aggregate source tended to be dirty with minus #200 material clinging to the larger size stone. This in turn tended to plug the spray nozzles in the scrubber system, which resulted in each subsequent test result being worse than the previous result. This was also compounded by the fact that we were testing with a course base mix with a low asphalt content. Also, in previous stack tests, the back half results were not considered in the total weight of grains per dry standard cubic foot, but were very significant in regards to the final results of this test. On page 20 of the test results it refers to the probe wash samples as being a heavy brown particulate, which is consistent with the material that was in the port-a-ponds. This material did not seem to separate very well when wet and tended to feel slimy and tacky to the touch.

I would like to thank you for the consideration you have shown to myself and James Julian, Inc. during this process of erecting and stack testing the plant. We are conducting an investigation as to the entire scope of the problem and the extent of the solution. We are engaging outside technical advice and will report to you as soon as our results are complete.

Sincerely,

Ronald A. McGuirk
Plant Superintendent
James Julian, Inc.

cc: Joe Julian
File

Ve 1-64

RAMCON

ENVIRONMENTAL CORPORATION

RECEIVED

DEC 2 1991

DER-AIR QUALITY CONTROL,
WILLIAMSPORT REGION

SOURCE SAMPLING
for
PARTICULATE & TOTAL HYDROCARBON EMISSIONS
JAMES JULIAN, INCORPORATED
PERRY TOWNSHIP, PENNSYLVANIA
October 16, 1991

Ron McGuirk
James Julian, Inc.

Wm. Joseph Sewell, II
Project Manager

Ken Allmendinger
Field Supervisor

RAMCON BUILDING, 223 SCOTT STREET, MEMPHIS, TENNESSEE 38112
TELEPHONE 800/458-4567 IN TENNESSEE 901/458-7000 FAX 901-458-3868

RAMCON

ENVIRONMENTAL CORPORATION

November 4, 1991

Mr. Ron McGuirk
James Julian, Inc.
P.O. Box 647
North East, MD 21901

Re: Particulate & THC Emissions Test: October 16, 1991

Dear Mr. McGuirk:

Enclosed you will find four copies of our report on the particulate & total hydrocarbon emissions test we conducted at your plant. Based on our test results, the average grain loading of the three test runs for particulate matter does not pass the 0.02 gr/DSCF emissions limitation set by the State of Pennsylvania, however, the total hydrocarbon is within the specified limitations. Therefore, the plant is operating in compliance with State Standards for total hydrocarbon emissions, but not particulate matter.

You will want to sign the report covers and send two copies to:

Mr. Richard L. Maxwell, Jr.
Chief, Air Quality
Bureau of Air Quality Control
Pennsylvania Department of Environmental Resources
200 Pine Street
Williamsport, PA 17701-6510

We're sorry the plant does not meet the allowable emissions limitation for particulate matter at this time, but we're sure it will after a few modifications. You will need to keep one copy of the report at the plant. We certainly have enjoyed working with you. Please let us know if we can be of further assistance.

Respectfully,

Wm. Joseph Sewell, II
Project Manager

GSBII:kh

Enclosures

RAMCON BUILDING, 223 SCOTT STREET, MEMPHIS, TENNESSEE 38112
TELEPHONE 800/458-4567 IN TENNESSEE 901/458-7000 FAX 901-458-3868

TABLE OF CONTENTS

I.	INTRODUCTION	1
II.	TEST RESULTS	2
III.	TEST PROCEDURES	4
IV.	THE SOURCE	8
V.	EQUIPMENT USED	13
VI.	LABORATORY PROCEDURES & RESULTS	17
VII.	CALCULATIONS	26
VIII.	FIELD DATA	
	A. INSTRUMENTAL	40
	B. PARTICULATE	47
IX.	CALIBRATIONS	
	A. INSTRUMENTAL	53
	B. PARTICULATE	55
X.	CALIBRATION GAS CERTIFICATIONS	62
XI.	RAMCON PERSONNEL	67

I. INTRODUCTION

On October 16, 1991, personnel from RAMCON Environmental Corporation conducted a source emissions compliance determination at James Julian, Inc. (North East Hot Mix Co.) located in Perry Township, Pennsylvania. The testing was performed on the facility for total hydrocarbons and particulate emissions. The gaseous hydrocarbon emissions determination was performed utilizing real-time continuous instrumentation equipment.

James Julian employs a Boeing drum mix asphalt plant which is used to manufacture hot mix asphalt for road pavement. The process consists of blending prescribed portions of cold feed materials uniformly and adding sufficient hot asphalt oil to bind the mixture together.

The emissions compliance test was performed on the outlet stack of this process. A venturi scrubber system is utilized to control the outlet stream emissions content. During the testing period(s), the stack gas velocity, volumetric flow, temperature, moisture, carbon dioxide and oxygen content were determined. These parameters were utilized in converting the stack pollutant concentrations to emission values.

RAMCON personnel conducting the testing were Mr. Ken Allmendinger, Field Supervisor, Mr. Billy Lockett, Team Leader, and Mr. Dave Armstrong, Field Technician. Mr. Allmendinger was responsible for calibration of the instruments for the gaseous testing. Mr. Lockett was responsible for conducting the particulate sampling. Mr. Tim Huey conducted the particulate laboratory analysis including taring the beakers and filters and recording final data in the laboratory record books. Custody of the particulate samples were limited to Mr. Lockett and Mr. Huey.

The purpose of the testing was to determine if the total rate of THC and particulate emissions from the exhaust stack is below or equal to the allowable emissions set by the State of Pennsylvania.

II. TEST RESULTS

The test results are summarized in Tables I and II. Table I shows the data summary for the gaseous hydrocarbon concentrations in terms of parts per million (ppm), dry basis. Also tabulated in this summary is the emission value in pounds per hour (lb/hr). The concentration and emission values are listed as methane. Table II shows the particulate results in terms of gr/dscf and lb/hr.

The allowable emission rate established for particulate matter is 0.02 gr/dscf. The allowable emission limitation for the THC gaseous compounds is 0.07 pounds per ton of asphalt concrete produced. These values are set forth in this facility's Plan Approval 55-303-002, condition #3.

Based on our test results, the total hydrocarbon emissions do pass the allowable emissions limitation set by the State of Pennsylvania, however, the particulate matter exceeds the limitation. Mr. Richard Maxwell representing the Pennsylvania Department of Environmental Resources observed the testing conducted by RAMCON Environmental Corporation.

SUMMARY OF TEST RESULTS
October 16, 1991

TABLE I
TOTAL HYDROCARBON EMISSIONS

Allowable Emissions: 0.07 lbs/ton

Run #	O_2, %	CO_2, %	THC, ppm_d	THC, lbs/hr	THC, lbs/ton
1	8.4	8.7	269.9	14.8	0.038
2	10.5	7.0	248.3	16.91	0.042
3	10.3	7.0	246.4	15.88	0.040
Avg.	9.7	7.6	254.9	15.86	0.040

TABLE II
PARTICULATE EMISSIONS

Allowable Emissions: 0.02 gr/DSCF

Run #	Concentration gr/DSCF	Emissions lbs/hr
1	0.0720	13.58
2	0.0774	18.12
3	0.0927	20.55
Avg.	0.0807	17.42

III. TEST PROCEDURES

A. Methods Used: Testing was conducted according to procedures outlined in 49FR43845, October 31, 1984, as amended. US EPA Reference Method 25A and 5 were used on the process stack to determine the total hydrocarbons and particulate emissions respectively. These reference methods are outlined in 40CFR, Part 60, Appendix A, July 1, 1989.

1. Total Particulate - US EPA Reference Method 5:

a. Preparation - One hundred ml of deionized water was placed in the first two impingers. The third impinger was initially empty and the fourth impinger contained a pre-weighed amount of silica gel for complete moisture removal. In assembling the sample train, a small amount of silicon grease was placed on the ball joints to ensure adequate sealing.

An ice bath was prepared to submerse the impinger system. The temperature of the last impinger was also monitored throughout the testing to ensure adequate condensation of the water vapor in the flue gases.

A stainless steel probe liner and nozzle system was utilized for the total particulate determinations. The probe housed a set of calibrated S-type pitot tubes and a calibrated thermocouple for monitoring stack temperature.

b. Sampling - A leak check was performed prior to each test run. The entire sample train system was subjected to a vacuum that did not exceed 0.02 cfm leakage rate. The vacuum that is established during the pre-test leak check was not exceeded during the test period.

Three sample runs were conducted at the sampling location to constitute a complete test. The sampling time will be a minimum of 1 hour and at least 50 scf of stack gas will be extracted via the sampling system.

When a test run was completed, a post-test leak check was conducted prior

to any dismantling of the sampling train. Once this had been successfully achieved, the sample train was dismantled for sample recovery.

The probe and connecting front half glassware was washed with water and acetone. The contents of the impingers were volumetrically measured for moisture gain and transferred to a labeled sample container. The glass fiber filter was carefully transferred to its sample container. The back half glassware was also rinsed with water and acetone.

2. Determination of Total Gaseous Organic Emissions From Stationary Sources (Instrumental Analyzer Procedure) - US EPA Method 25A:

a. Calibration - The calibration of the instruments is performed using certified gas standards composed of a known concentration of methane or propane in zero grade nitrogen. These gas standards are prepared using partial pressure/volumetric and gravimetric methods.

The prepared gas mixture is analyzed and the certification tolerance is not greater than 2% of the pollutant component. A copy of the analysis certificate for each of the certified gas mixtures used during the testing is included in the test report.

The instrument utilizes an flame ionization detector. Immediately prior to each compliance test series, a complete calibration of the instrument is performed. Each instrument has zero grade nitrogen injected into it and the zero potentiometer is adjusted, if necessary, until the proper voltage output from the analyzer is achieved. Then a high range pollutant gas mixture, that has been prepared in the specified range percentage of the span or fullscale, is injected. After the system stabilizes, the span or fullscale potentiometer is adjusted until the voltage output from analyzer corresponds to the certification of analysis for the respective calibration gas.

When this procedure is complete and the system has responded properly to a zero and fullscale reading, a mid and low range certified calibration gas is

injected into the system. No adjustments are made to the system except to achieve proper flow rate through the analyzer. The analyzer, after reaching a stable value, must correspond to the certified value of the calibration gas within a specified percentage of the fullscale. This mid and low range calibration gas serves two purposes of quality control and quality assurance. The first is to show the instrument analyzes and outputs data on a linear scale. The second purpose is to validate the zero and fullscale values of the instrument are properly set.

b. Sampling - After calibration, the system is purged with zero grade nitrogen to remove any pollutants that were injected as calibration gas. Once the system indicates the pollutant gases have been removed, the calibration valve assembly is positioned to allow stack gas to flow through the instrument.

The sample gas is filtered at the stack position to remove any particulate matter. This prevents instruments from being contaminated and ensures reliable data acquisition.

All samples injected to the instruments are removed from the stack and delivered to the instruments via a heated probe and sample line. This prevents any condensation of water vapor and/or pollutant in the gas stream.

Three one hour test runs were conducted at the source location to constitute a complete test series. The instrument output was recorded on a one minute basis for a total of sixty data points for each test run. These readings were first corrected to a methane basis, then averaged for the test period.

To demonstrate the instrument did not exhibit any deviation from the calibrated values set at the beginning of a test period, a sample of certified calibration gas is injected into the sampling system at the conclusion of each test run. The sample system must respond within specified tolerance limits according to the initial system bias check.

This post-test calibration serves two purposes: (1) it demonstrates that excessive calibration drift of the instrument(s) did not occur during the test period and, (2) the system was not contaminated with any foreign material from the source to alter any results during the test period.

B. Problems Encountered: No problems were encountered that would effect the test results.

C. Sampling Site: The emissions test was conducted after a scrubber on a round process stack with an inside diameter of 53". Two sample ports were placed 90° apart, approximately 109" downstream from the last flow disturbance and approximately 30" upstream from the outlet. Another sample port was placed 5.5" below the existing ports for the THC sampling. Twenty four points were sampled for the particulate test, twelve through each port for three minutes each for a total testing time of 72 minutes.

Points on a Diameter	Probe Mark
1	*7.2"
2	9.8"
3	12.6"
4	15.9"
5	20.0"
6	25.9"
7	42.1"
8	48.0"
9	52.1"
10	55.4"
11	58.2"
12	60.9"

Measurements include a 6" standoff

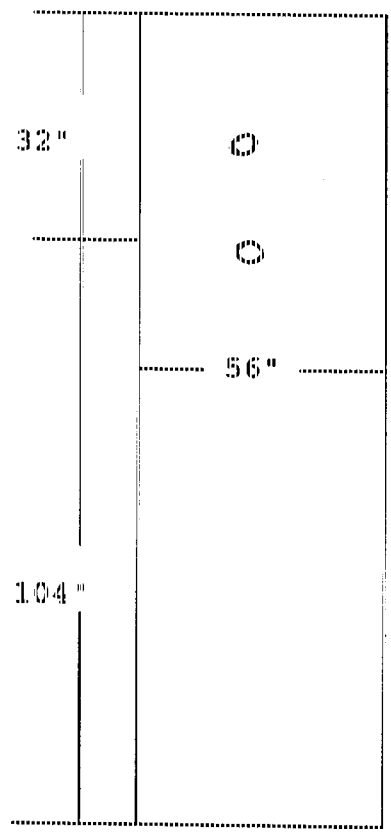

IV. THE SOURCE

IV. THE SOURCE

James Julian, Inc. employs a Boeing drum mix asphalt plant which is used to manufacture hot mix asphalt for road pavement. The process consists of blending prescribed portions of cold feed materials (sand, gravel, screenings, chips, etc.) uniformly and adding sufficient hot asphalt oil to bind the mixture together. After the hot asphalt mix is manufactured at the plant, it is transported to the location where it is to be applied. The hot asphalt mix is spread evenly over the surface with a paver then compacted with a heavy roller to produce the final product.

The following to a general description of the plant's manufacturing process: The cold feed materials (aggregate) are dumped into separate bins which in turn feed a common continuous conveyor. The aggregate is dispensed from the bins in accordance with the desired formulation onto the cold feed system conveyor, to an inclined weigh conveyor, then to a rotating drum for continuous mixing and drying at approximately 300°F. When recycled asphalt mix is used, it is added halfway down the drum through a separate conveyor. The required amount of hot asphalt oil is then injected onto and mixed into the dried aggregate. The now newly formed hot asphalt mix is pulled to the top of a storage silo by a conveyor. The hot asphalt mix is then discharged from the storage silo through a slide gate into waiting dump trucks which transports the material to a final destination for spreading. The rated capacity of the plant will vary with each aggregate mix and moisture content with a 5% surface moisture removal.

The mixer uses a burner fired with #2 fuel oil to heat air to dry the aggregate. The air is drawn into the system via an exhaust fan. After passing through the gas burner, the air passes through a high efficiency scrubber. The scrubber is manufactured by Boeing. The exhaust gases are blown through the scrubber and discharged to the atmosphere through the stack. The design pressure drop across the venturi is in excess of 14 inches of water. The particulate matter, which is removed by the scrubber, is fed into a scrubber pond where it drops out of suspension.

DATA SUMMARY ON STACK BEING TESTED

AGGREGATE

1. Name/type of mix [illegible]
2. Name/type of 2nd mix (if used) _____
3. Type/temperature of Liquid Asphalt [illegible] / 300 °F
4. Sieve/Screening analysis: _____ % Passing:

	1st mix / 2nd mix		1st mix / 2nd mix		1st mix / 2nd mix
1"	93 /	3/8"	/	#	/
3/4"	-- /	#200	5.5 /	#	/
1/2"	60 /	#	/	#	/

CONTROL SYSTEM

Manufacturer [illegible]

A. Baghouse:

1. Type of bags _____ # of bags _____ Sq. ft. of bags _____
2. Air to cloth ratio _____ Designed ACFM _____
3. Type of cleaning - pulse jet _____ reverse air _____ plenum pulse _____ other _____
4. Cleaning cycle time _____ Interval between cleaning cycle _____
5. Pulse pressure on cleaning cycle _____ psi

B. Scrubber:

1. Type - Venturi ✓ Wet Washer _____
   Spray Booth _____ Other _____
2. Gallons per minute through system 300 gpm
3. Water source [illegible] (i.e. pond, lagoon, etc.)
4. Number of spray nozzles 36

Company Name [illegible] Date 10/16/91

Company Representative [illegible]

Form: REC/03

DATA ON FACILITY BEING STACK TESTED

COMPANY NAME James Julian Inc. COMPANY REP. Ron Hagarty PHONE (814) 287-5656

LOCATION OF FACILITY Mt. Pleasant Mills, Pa ORIGINAL START-UP DATE _____ DESIGNED CAPACITY _____

OEM _____ MODEL NO. _____ TYPE _____ AC TYPE 20

1 Time (24 Hrs) NOTE: check small box in column when moisture sample is taken	2 Fuel Use (Refuel Oil / Nat. Gas / Propane / Coal / Other)	3 Burner Setting	4 Blower Pressure	5 Production Rate: Mix Aggregate TPH	5 Production Rate: RAP TPH	6 Asphalt Cement %	7 Mix Temp. °F	8 Exhaust Gas Temp. °F	9 Venturi Scrubber / Baghouse: Pressure Drop in w.g.	9 Venturi Scrubber / Baghouse: Water Pressure psi	10 Ambient Temp. °F	11 Relative Humidity %	12 Exhaust Damper Position
M		60%	.10	376	N/A	3.8	300°	335°	16.6	100			Open Diagram
		59%	.10	385	N/A	3.8	300°	335°	16.4	100			
		58%	.15	390	N/A	3.8	295°	330°	16.0	100			
		55%	.18	388	N/A	3.8	291°	326°	14	100			
		60%	.10	395	N/A	3.8	285°	310°	15	98			
1st Test Done		59%	.10	400	N/A	3.8	286°	300°	15.1	100			
M		50%	.10	390	N/A	3.8	295°	333°	14.1	100	Magnehelic on Scrubber Not Working		
		50%	.11	400	N/A	3.8	295°	334°	14.8	100			
		40%	.10	400	N/A	3.8	290°	309°	14.0	100			
		40%	.10	400	N/A	3.8	295°	325°	15.0	100			
2nd Test Done		40%	.10	400	N/A	3.8	293°	324°	15.0	100			
M		40%	.10	400	N/A	3.8	290°	320°	16.0	100			
		40%	.10	400	N/A	3.8	290	315	16.0	100			
		40%	.10	400	N/A	3.8	290°	320°	15.0	100			
		40%	.10	400	N/A	3.8	292°	315°	14.9	100			
		45%	.10	400	N/A	3.8	290°	310°	14.0	100			
		45%	.15	400	N/A	3.8	290°	320°	14.1	100			

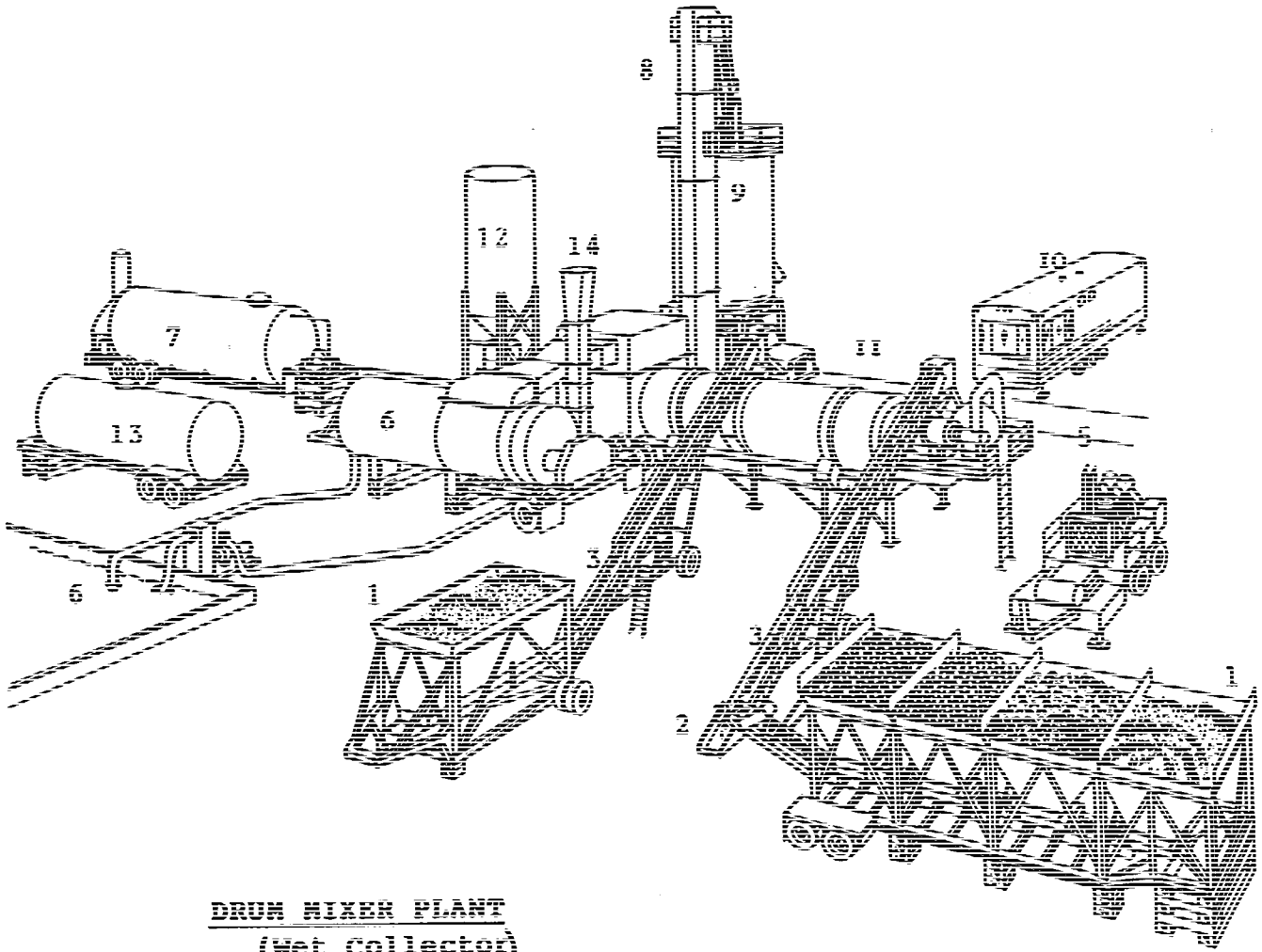

DRUM MIXER PLANT
(Wet Collector)

1. Aggregate bins: Virgin and/or recycled aggregate is fed individually into bins by type. It is metered onto a conveyor belt running under the bins to a shaker screen. The proportion to each aggregate type is determined by the job mix formula and pre-set to be metered out to meet these specifications.

2. Preliminary oversize screen: The aggregate is fed through a shaker screen where oversize rocks and foreign material is screened out of the mix.

3. Weigh conveyor belt: The aggregate is conveyed to the rotary drum dryer on a conveyor belt which weighs the material. The production rate is determined by this weight reading.

4. Rotary drum/dryer mixer: The aggregate is fed into the rotary drum dryer where it is tumbled by flighting into a veil in front of a flame which drives off the moisture. Further mixing is also accomplished in an outer shell of this drum. Hot liquid asphalt is injected in the outer shell of the drum where it is mixed with the aggregate.

5. Burner: The fuel fired burner is used to provide the flame which drys the aggregate and sand in the rotating drum as well as reheat recycled asphalt when it is a part of the mix.

6. Wet scrubbing system: A system of cyclonic action, spray nozzles and a venturi removes 99% of particulates in the gas stream.

7. Liquid asphalt storage: The liquid asphalt is stored in this heated tank until it is needed in the mixer. The amount of asphalt content and its temperature are pre-set for each different type job.

8. Conveyor to surge/storage bin: The finished product of aggregate mixed with liquid asphalt is conveyed to a surge bin.

9. Surge/Storage bin: The asphaltic cement is dumped into this surge bin and metered out to dump trucks which pull underneath a slide gate at the bottom of the bin.

10. Control/operators house: The entire plant operation is controlled from this operator's house.

11. Truck loading scale: As the trucks receive the asphalt from the storage/surge bin, they are weighed on the lading scale which tells the plant operator the amount of asphalt that is being trucked on each individual load.

12. Mineral filler system (when used).

13. Burner fuel storage (when used).

14. Stack

V. EQUIPMENT USED

V. EQUIPMENT USED

Equipment used on conducting the particulate emissions test was:

A. The Lear Siegler PM-100 stack sampler with appropriate auxillary equipment and glassware. The train was set up according to the schematic on the nex page.

B. An Airguide Instruments Model 211-B (uncorrected) aneroid barometer was used to check the barometric pressure.

C. Weston dial thermometers are used to check meter temperatures. An Analogic Model 2572 Digital Thermocouple is used for stack temperatures.

D. A Hays 621 Analyzer was used to measure the oxygen, carbon dioxide and carbon monoxide content of the stack gases. For non-combustion sources, A Bacharach Instrument Company Fyrite is used for the gas analysis.

E. Filters are mady by Schleicher and Schuell and are type 1-HV with a porosity of .03 microns.

F. The acetone is reagent grade or ACS grade with a residue of ≤ .001.

PRINCIPLES OF OPERATION

SERVOMEX 1400 SERIES GAS ANALYZERS

SPECIFICATION	OXYGEN
Principle	Magneto-dynamic
Linearity	±0.2% O_2
Repeatability	±0.2% O_2
Zero Drift (Per Week)	<0.2% O_2
Signal Output	0-1V non-isolated for 0-100% O_2
Alarms	Flow alarm. 4 sets of changeover relay contacts rated at 3A/120V AC, 1A/240V AC or 1A/28V DC
Display	3½ digit LCD reading 0 to 100% O_2
Response Time	Less than 15 seconds to 90%
Operating Ambient Temperature	32 - 104°F (0-40°C)
Relative Humidity	0 - 85%, non-condensing
Sample Pressure	0.2 to 0.6 barg
Sample Contact Materials	Stainless steel, pyrex, glass, brass, platinum, epoxy resin, viton, polypropylene and glass fibre
AC Supply	110 to 120V AC, or 220 to 240V AC, ±10%, 48 to 62Hz, 15VA maximum
Dimensions	19" Rack - 4U case Bench top - 7.1" (180mm) high, 10.1" (256mm) wide, 15.4" (390mm) deep
	22 lbs (10kg) approximately

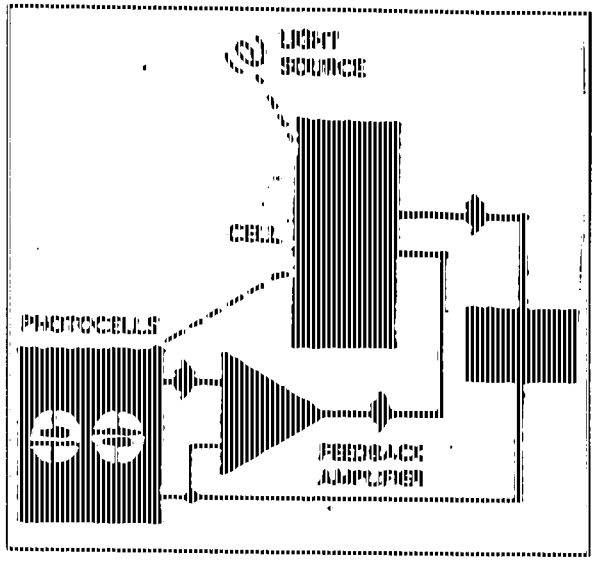

PARAMAGNETIC OXYGEN

The oxygen analyzer measures the paramagnetic susceptibility of the sample gas by means of a magneto-dynamic type measuring cell.

Oxygen is virtually unique in being a paramagnetic gas, this means that it is attracted into a magnetic field. In the Servomex measuring cell, the oxygen concentration is detected by means of a dumb-bell mounted on a torque suspension in a strong, non-linear magnetic field. The higher the concentration of oxygen, the greater the dumb-bell is deflected from its rest position. this deflection is detected by an optical system and twin photocells connected to an amplifier. Around the dumb-bell is a coil of wire. A current is passed through this coil to return the dumb-bell to its original position. The current is measured and is proportional to the oxygen concentration.

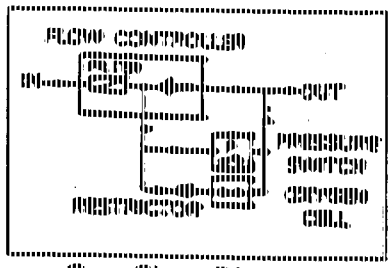

Gas Flow Diagram

Advantages

- Not cross sensitive to most common gases
- Long lifetime
- Rugged Design
- No routine cell maintenance

J.U.M.®
ENGINEERING

HEATED TOTAL HYDROCARBON ANALYZER
MODEL VE7

The J.U.M. Engineering Model VE7 is a high accuracy Total Hydrocarbon Analyzer for the measurement and analysis of organic vapors.

The VE7 utilizes a Hydrogen Flame Ionization Detector (FID) in a thermostatically controlled oven to prevent the loss of high molecular weight hydrocarbons.

Options
Digital display with BCD output/without BCD output Remote range control and range I.D.
Recorder output of oven temperature

- All heated components
- Integrated heated sample pump
- Permanent heated stainless steel 2 micron sample filter
- Built in burner air supply - no extra bottles needed
- Automatic fuel enrichment for ignition
- 19 inch relay rack mount
- 1% precision full scale
- Response time - 90% full scale within 1 second

STANDARD SPECIFICATIONS:

Analysis Method:	Flame Ionization Detector (FID)
Sensitivity:	Max. 1 ppm CH
Response Time:	90% of full scale in less than one second
Zero Drift:	1% of full scale per 24 hours
Span Drift:	1% of full scale per 24 hours
Linearity:	Within 1%
Oxygen Synergism:	Less than 1% of selected range
Ranges:	Any three of the following: 0 - 10, 100, 1000, 10,000, 100,000 ppm
Outputs:	0 - 10 Volts D.C.
Display:	Analog Meter in ppm Hydrocarbon or in % L.E.L.
Zero/Span Adjust:	Manual on front panel
Fuel Consumption:	Hydrogen 20 cc/min at 22 psig (1.5 Bar) Hydrogen/Helium 40/80 cmbc 80 cc/min.
Air Consumption:	None Integral Air generator
Zero & Span Gas:	3 psig (200 m Bar)
Sample Pump:	All Stainless Steel, heated, 3 liters per minute at operating temperature
Sample Pressure:	By Integral Pump 3 psig (200 m Bar)
Sample Filter:	Permanent all stainless steel 2 micron back-purged for cleaning
Analysis Temperature:	Adjustable 200 to 400°F (93 to 204°C)
Power Requirements:	110 Volts, 60 Hertz AC 800 Watts (others on request)
Ambient Temperature:	32°F to 110°F (0 to 43°C)
Dimensions:	Width 483 mm (19 inches), Depth 480 mm (18-1/9 inches), Height 221 mm (8-3/4 inches)
Weight:	38.6 lbs (17.5 kg)
Shipping Weight:	53 lbs (24 kg)

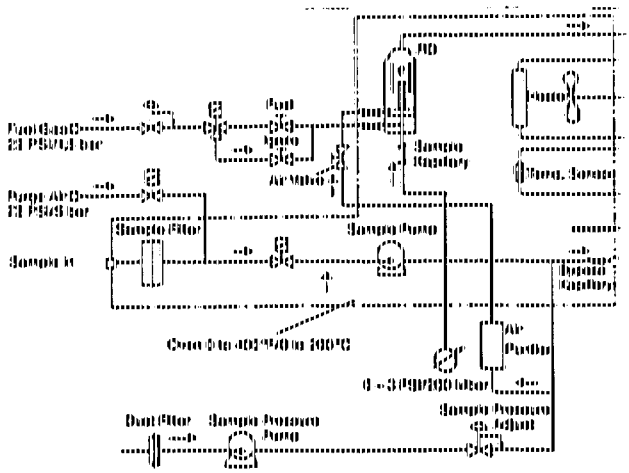

FUJI 730
NDIR SINGLE GAS ANALYZER

This unique Mass Flow Sensor used in the Fuji 730 Single Gas Analyzer provides significant advantages over other sensors used for this purpose. The design of the Mass Flow Detector minimizes the adverse effects of vibration which is often present in harsh environments. In addition, the Mass Flow Sensor System virtually eliminates interference making the Fuji 730 a powerful analytical tool for monitoring burner and boiler efficiency, heat treatment, fermentation, well logging and many other applications which require exceptional accuracy, stability, high sensitivity and reliability.

PRINCIPLE OF OPERATION

The Fuji 730 Series Analyzers use the infrared adsorption characteristic of gases to measure the concentration of gas samples. An efficient single beam design which incorporates a unique mass flow sensor system insures accurate and interference free analysis for a wide variety of applications.

A single beam of infrared energy is chopped and passed through a sample cell containing the flowing as sample. Due to the adsorption characteristic, the amount of energy in the beam is reduced by the concentration of the measured gas in the sample. The attenuated infrared beam is passed serially through the twocavities of the mass flow sensor which contain a high concentration of the gas species the analyzer is intended to measure. The two cavity sensor performs two functions in the analyzing process, it first eliminates interference caused by other gases and water vapor by detecting and subtracting the interference component from the detector output, and secondly, produces an output signal which represents an accurate duplication of the relative infrared energy adsorption. This resultant signal is electronically processed and linearized to provide an electrical signal which drives meters and other output devices.

STANDARD GASES:
Carbon Monoxide (CO)
Carbon Dioxide (CO_2)
Methane (CH_4)

STANDARD RANGES:
0-500/1000 ppm
0-1000/2000 ppm
0-2000/5000 ppm
0-2500/5000 ppm

0-0.5/1.0%
0-1/2%
0-2/5%
0-5/10%
1-10/20%

PURGE GAS FITTING
Standard Equipment

INTERNAL SPAN CHECK FEATURE
Calibration check without the use of span gases.
Conserves gas and reduces operating costs.

SPECIFICATIONS

Repeatability:	±0.5% of full scale (low range) ±1.0% of full scale (high range)
Zero Drift*:	±1% of full scale per 24 hours
Span Drift*:	±1% of full scale per 24 hours
Linearity:	±2% of full scale (within linearizer)
Noise Level:	0.5% of full scale
Speed of Response:	90% indication
Electrical:	2, 3 or 5 seconds (field selectable)
Pneumatic:	Less than 15 seconds (depending on cell length)
Warm-Up:	Two hours (to ±2% full scale)
Internal Span Check:	Manually activated from front panel
Outputs:	0 to 1V DC, linear & 4-20mA DC, linear
Ambient Temperature Range:	23 to 113°F (-5 to 45°C)
Ambient Humidity:	To 90% R.H. (non-condensing)
Sample Gas Temperature:	32 to 122°F (0 to 50°C)
Sample Gas Flow Rate:	2 ± 1 scfh (1.0 ± .05 slpm)
Purge Gas Rate (where necessary):	2 scfh (1 slpm) when required
Power Requirements:	115V AC ± 10%, 60 Hz, 30W
Gas Connections:	All ¼" compression-type tube fittings
Size and Weight:	7.9 (H) x 8.9 (W) x 21.3 (D) inches (200 x 250 x 541 mm) 24.2 pounds (11 kg)

*constant conditions

VI. LABORATORY PROCEDURES & RESULTS

LABORATORY PROCEDURES FOR PARTICULATE SAMPLING

I. Field Preparation

A. FILTERS: Fiberglass 4" sampling filters are prepared as follows:

Filters are removed from their box and numbered on the back side with a felt pen. The numbering system is continuous from job to job. The filters are placed in a desiccator to dry for at least 24 hours. Clean plastic petri dishes, also numbered, top and bottom, are placed in the desiccator with the filters. After desiccation, the filters are removed, one at a time, and weighed on the Sartorius analytical balance then placed in the correspondingly numbered petri dish. Weights are then recorded in the lab record books. Three filters are used for each complete particulate source emissions test and there should be several extra filters included as spares.

B. SILICA GEL: Silica Gel used for the test is prepared as follows:

Approximately 200 g of silica gel is placed in a wide mouth "Mason" type jar and dried in an oven at 175°C for two hours. The open jars are removed and placed in a desiccator until cool for two hours and then tightly sealed. The jars are then numbered and weighed on the triple beam balance to the closest tenth of a gram. This weight is recorded for each sealed jar. The number of silica gel jars used is the same as the number of filters. Silica gel should be indicating type, 6-16 mesh.

II. Post - Testing Lab Analysis

A. FILTERS: The filters are returned to the lab in their sealed petri dishes. In the lab, the dishes are opened and placed into a desiccator for at least 24 hours. Then the filters are weighed continuously every six hours until a constant weight is achieved. All data is recorded on the laboratory forms that will be bound in the test report.

B. SILICA GEL: The silica gel used in the stack test is returned to the appropriate mason jar and sealed for transport to the laboratory where it is reweighed to a constant weight on a triple beam balance to the nearest tenth of a gram.

C. PROBE RINSINGS: In all tests where a probe washout analysis is necessary, this is accomplished in accordance with procedures specified in "EPA Reference Method 5". These samples are returned to the lab in sealed mason jars for analysis. The front half of the filter holder is washed in accordance with the same procedures and included with the probe wash. Reagent or ACS grade acetone is used as the solvent. The backhalf of the filter holder is washed with deionized water into the impinger catch for appropriate analysis.

D. IMPINGER CATCH: In some testing cases, the liquid collected in the impingers must be analyzed for solid content. This involves a similar procedure to the probe wash solids determination, except that the liquid is deionized water.

E. ACETONE: A blank analysis of acetone is conducted from the one gallon glass container used in the field preparation. This acetone was used in the field for rinsing the probe, nozzle, and top half of the filter holder. A blank analysis is performed prior to testing on all new containers of acetone received from the manufacturer to insure that the quality of the acetone used will be exceed the .001% residual purity standard.

SPECIAL NOTE

When sampling sources high in moisture content, (such as asphalt plants) the filter paper sometimes sticks to the filter holder. When removing the filter, it may tear. In order to maintain control of any small pieces of filter paper which may be easily lost, they are washed with acetone into the probe washing. This makes the filter weight light (sometimes negative) and the probe wash correspondingly heavier. this laboratory procedure is taught by EPA in the "Quality Assurance for Source Emissions Workshop" at Research Triangle Park and is approved by EPA.

WEIGHING PROCEDURE - SARTORIUS ANALYTICAL BALANCE

The Sartorius balance is accurate to 0.1 mg and has a maximum capacity of 200 grams. The balance precision (standard deviation) is 0.05 mg. Before weighing an item, the balance should first be zeroed. This step should be taken before every series of weighings. To do this, the balance should have all weight adjustments at the "zero" position. The beam arrest lever (on the lower left hand side toward the rear of the balance) is then slowly pressed downward to the full release position. The lighted vernier scale on the front of the cabinet should align with the "zero" with the mark on the cabinet. If it is not so aligned, the adjustment knob on the right hand side (near the rear of the cabinet) should be turned carefully until the marks align. Now return the beam arrest to the horizontal arrest position. The balance is now "zeroed".

To weigh an item, it is first placed on the pan. And the sliding doors are closed to avoid air current disturbance. The weight adjustment knob on the right hand side must be at "zero". The beam arrest is then slowly turned upward. The lighted scale at the front of the cabinet will now indicate the weight of the item in grams. If the scale goes past the divided area, the item then exceeds 100 g weight (about 3 1/2 ounces) and it is necessary to arrest the balance (beam arrest lever) and move the lever for 100 g weight away from you. It is located on the left hand side of the cabinet near the front, and is the knob closest to the side of the cabinet. The balance will not weigh items greater than 200 grams in mass, and trying to do this might harm the balance. Remember, this is a delicate precision instrument.

After the beam is arrested in either weight range, the procedure is the same. When the weight of the item in grams is found, "dial in" that amount with the two knobs on the left hand side (near the 100 g lever) color coded yellow and green. As you dial the weight, the digits will appear on the front of the cabinet. When the proper amount is dialed, carefully move the arrest lever down with a slow, steady turn of the wrist. The lighted dial will appear, and the right hand side knob (front of cabinet) is turned to align the mark with the lower of the two lighted scale divisions which the mark appears between. when these marks are aligned, the two lighted digits along with the two indicated on the right hand window on the cabinet front are fractional weight in grams (the decimal would appear before the lighted digits) and the whole number of grams weight is the amount "dialed in" on the left.

In general, be sure that the beam is in "arrest" position before placing weight on or taking weight off of the pan. Don't "dial in" weight unless the beam is arrested. The balance is sensitive to even a hand on the table near the balance, so be careful and painstaking in every movement while weighing.

Form REC#8

SAMPLE ANALYTICAL DATA FORM

Company Name James Jordan

Sample Location Pressure-O2 H2O-Front

Blank Volume (V_a) 35 ml

Date/Time wt. blank 10-29/9A

Date/Time wt. blank 10-29/3P

Relative Humidity in Lab 38 %

Density of Acetone (ρ_a) .7857 mg/ml

Gross wt. 175.2407 g

Gross wt. 175.2405 g

Ave. Gross wt. 175.2406 g

Tare wt. 175.2404 g

Weight of blank (m_{ab}) 0.0002 g

Acetone blank residue concentration (C_a) : (C_a) = (m_{ab}) / (V_a) (ρ_a) = (0.000007 mg/g)

Acetone Blank Wt. : $W_a = C_a V_{aw} \rho_a$ = (0.000007) (150) (0.7857) = (0.0008 g)

		Run # 1	Run # 2	Run # 3
Acetone rinse volume (V_{aw})	ml	150	150	150
Date/Time of wt. 10-28/1PM	Gross wt. g	169.9702	176.4767	163.8912
Date/Time of wt. 10-28/3PM	Gross wt. g	169.9704	176.4773	163.8917
	Average Gross wt. g	169.9703	176.4770	163.8915
	Tare wt. g	169.8307	176.2500	163.6203
	Less Acetone blank wt. (W_a) g	0.0008	0.0008	0.0008
Weight of particulate in acetone rinse (m_a)	g	0.1388	0.2262	0.2704

Filter Numbers	#	PT5499	PT5497	PT5495
Date/Time of wt. 10-28/1PM	Gross wt. g	0.6650	0.6448	0.6551
Date/Time of wt. 10-28/3PM	Gross wt. g	0.6652	0.6447	0.6554
	Average Gross wt. g	0.6651	0.6445	0.6554
	Tare wt. g	0.5631	0.5612	0.5601

Weight of particulate on filter (m_f)	g	0.1020	0.0833	0.0953
Weight of particulate in acetone rinse (m_a)	g	0.1388	0.2262	0.2704
Total weight of particulate (m_p)	g	0.2408	0.3095	0.3657

NOTE: In no case should a blank residue greater than 0.01 mg/g (or 0.00196 of the blank weight) be subtracted from the sample weight.

Remarks: Heavy Brown Particulate

Signature of Analyst [illegible] Signature of Reviewer [illegible]

D:\DONNA\FORMS\LAB\SAMPLE.TBL

Form REC#8

SAMPLE ANALYTICAL DATA FORM (P1)

Company Name James Julian

Sample Location Probe Wash - ACE - Front

Blank Volume (V_a) 35 ml

Relative Humidity in Lab 39 %

Density of Acetone (ρ_a) .7857 mg/ml

Date/Time wt. blank 10-25/9A — Gross wt. 165.0917 g

Date/Time wt. blank 10-25/3P — Gross wt. 165.0912 g

Ave. Gross wt. 165.0915 g

Tare wt. 165.0913 g

Weight of blank (m_{ab}) 0.0002 g

Acetone blank residue concentration (C_a) : (C_a) = (m_{ab}) / (V_a) (ρ_a) = (0.000007 mg/g)

Acetone Blank Wt. : $W_a = C_a V_{aw} \rho_a$ = (0.000007) (180) (0.7857) = (0.0009 g)

		Run # 1	Run # 2	Run # 3
Acetone rinse volume (V_{aw})	ml	180	180	180
Date/Time of wt. 10-25/9P	Gross wt. g	98.4496	100.2720	100.7221
Date/Time of wt. 10-28/9A	Gross wt. g	98.4496	100.2725	100.7226
	Average Gross wt. g	98.4496	100.2723	100.7224
	Tare wt. g	98.4373	100.2561	100.7176
	Less Acetone blank wt. (W_a) g	0.0009	0.0009	0.0009
Weight of particulate in acetone rinse (m_a)	g	0.0114	0.0153	0.0039

Filter Numbers	#			
Date/Time of wt.	Gross wt. g			
Date/Time of wt.	Gross wt. g			
	Average Gross wt. g			
	Tare wt. g			

Weight of particulate on filter (m_f)	g			
Weight of particulate in acetone rinse (m_a)	g			
Total weight of particulate (m_n)	g			

NOTE: In no case should a blank residue greater than 0.01 mg/g (or 0.001% of the blank weight) be subtracted from the sample weight.

Remarks:

Signature of Analyst [illegible] Signature of Reviewer [illegible]

D:\DONNA\FORMS\LAB\SAMPLE.TBL

Form REC#8

SAMPLE ANALYTICAL DATA FORM

Company Name James Julian

Sample Location Probe Mast - Ace - Front

Relative Humidity in Lab 39 %

Blank Volume (V_a) 35 ml N.A.

Density of Acetone (ρ_a) .7857 mg/ml

Date/Time wt. blank 10-25/4a

Gross wt. 165.0917 g

Date/Time wt. blank 10-25/3p

Gross wt. 165.0912 g

Ave. Gross wt. 165.0915 g

Tare wt. 165.0913 g

Weight of blank (m_{ab}) 0.0002 g

Acetone blank residue concentration (C_a) : (C_a) = (m_{ab}) / (V_a) (ρ_a) = (.000007 mg/g)

Acetone Blank Wt. : $W_a = C_a V_{aw} \rho_a$ = (0.000007) (180) (0.7857) = (0.0009 g)

		Run # 1	Run # 2	Run # 3
Acetone rinse volume (V_{aw})	ml	180	180	180
Date/Time of wt. 10-25/4p	Gross wt. g	98.4496	100.2720	100.7221
Date/Time of wt. 10-28/4a	Gross wt. g	98.4496	100.2725	100.7224
	Average Gross wt. g	98.4496	100.2723	100.7224
	Tare wt. g	98.4373	100.2561	100.7176
	Less Acetone blank wt. (W_a) g	0.0009	0.0009	0.0009
Weight of particulate in acetone rinse (m_a)	g	0.0114	0.0153	0.0039

Filter Numbers	#			
Date/Time of wt.	Gross wt. g			
Date/Time of wt.	Gross wt. g			
	Average Gross wt. g			
	Tare wt. g			

Weight of particulate on filter (m_f)	g			
Weight of particulate in acetone rinse (m_a)	g			
Total weight of particulate (m_n)	g			

NOTE: In no case should a blank residue greater than 0.01 mg/g (or 0.00196 of the blank weight) be subtracted from the sample weight.

Remarks:

Signature of Analyst [illegible] Signature of Reviewer [illegible]

D:\DONNA\FORMS\LAB\SAMPLE.TBL

PENNSYLVANIA BACKHALF (METHOD 5)

FILTERATION ANALYSIS

Company Name: JAMES TURAW	RUN #1	RUN #2	RUN #3
Filter Size (µm): 0.80			
Date/Time of wt. 10-30/8A Gross wt.	0.0741	0.0699	0.0737
Date/Time of wt. 10-30/2P Gross wt.	0.0736	0.0695	0.0740
Filter Ave. Gross wt.	0.0739	0.0697	0.0739
Filter Tare wt.	0.0734	0.0691	0.0730
Net	0.0005 ✓	0.0006 ✓	0.0009 ✓
Filter Size (µm): 0.45			
Date/Time of wt. 10-30/8A Gross wt.	0.0893	0.0897	0.0888
Date/Time of wt. 10-30/2P Gross wt.	0.0891	0.0897	0.0893
Filter Ave. Gross wt.	0.0892	0.0897	0.0891
Filter Tare wt.	0.0886	0.0888	0.0883
Net	0.0006 ✓	0.0009 ✓	0.0008 ✓
Filter Size (µm): 0.45			
Date/Time of wt. 10-30/8A Gross wt.	0.0924	0.0839	0.0915
Date/Time of wt. 10-30/2P Gross wt.	0.0919	0.0843	0.0915
Filter Ave. Gross wt.	0.0922	0.0841	0.0917
Filter Tare wt.	0.0917	0.0837	0.0911
Net	0.0005 ✓	0.0004 ✓	0.0006 ✓
Filter Size (µm): 0.20			
Date/Time of wt. 10-30/8A Gross wt.	0.0927	0.0711	0.0716
Date/Time of wt. 10-30/2P Gross wt.	0.0921	0.0715	0.0719
Filter Ave. Gross wt.	0.0925	0.0713	0.0718
Filter Tare wt.	0.0917	0.0704	0.0711
Net	0.0008	0.0009 ✓	0.0007 ✓
Filter Size (µm): 0.20			
Date/Time of wt. 10-30/8A Gross wt.	0.0740	0.0767	0.0709
Date/Time of wt. 10-30/2P Gross wt.	0.0745	0.0763	0.0713
Filter Ave. Gross wt.	0.0743	0.0765	0.0711
Filter Tare wt.	0.0738	0.0761	0.0708
Net	0.0005	0.0004 ✓	0.0003 ✓
NET TOTAL:			

Signature of Analyst: [illegible] Date: 10-30-91

Signature of Reviewer: [illegible] Date: 11-4-91

PENNSYLVANIA BOILER (METHOD 5)

FILTERATION ANALYSIS

Company Name: James Jones	RUN #1	RUN #2	RUN #3
Filter Size (μm): 0.20			
Date/Time of wt. Gross wt.	0.0721	0.0709	0.0715
Date/Time of wt. Gross wt.	0.0725	0.0706	0.0717
Filter Ave. Gross wt.	0.0723	0.0708	0.0716
Filter Tare wt.	0.0719	0.0705	0.0711
Net	0.0004	0.0003	0.0005
Filter Size (μm):			
Date/Time of wt. Gross wt.			
Date/Time of wt. Gross wt.			
Filter Ave. Gross wt.			
Filter Tare wt.			
Net			
Filter Size (μm):			
Date/Time of wt. Gross wt.			
Date/Time of wt. Gross wt.			
Filter Ave. Gross wt.			
Filter Tare wt.			
Net			
Filter Size (μm):			
Date/Time of wt. Gross wt.			
Date/Time of wt. Gross wt.			
Filter Ave. Gross wt.			
Filter Tare wt.			
Net			
Filter Size (μm):			
Date/Time of wt. Gross wt.			
Date/Time of wt. Gross wt.			
Filter Ave. Gross wt.			
Filter Tare wt.			
Net			
NET TOTAL:	0.0033	0.0015	0.0038

Signature of Analyst: [illegible] Date: 10-30-91

Signature of Reviewer: [illegible] Date: 11-4-91

PENNSYLVANIA BACK HALF ANALYSIS:
H_2O Filtration & Evaporation

COMPANY NAME: James Journey DATE: 10-28-91

Relative humidity in lab 41 %

Blank volume of Water (Va) 200 ml

Date/Time wt. blank 10-30/8A Gross wt. 175.2107 g

Date/Time wt. blank 10-30/8P Gross wt. 175.2105 g

Ave. Gross wt. 175.2106 g

Tare wt. 175.2104 g

Weight of blank (M_{ab}) 0.0002 g

H_2O Blank Residue Concentration (C_a) : $C_a = M_{ab}/V_a$ = 0.000001 mg/g

Blank Weight: $W_a = C_a V_{aw}$

		RUN 1	RUN 2	RUN 3
Impinger rinse volume (V_{aw})	ml	700	550	650
Date/Time of wt. 10-30/1P	Gross wt. g	156.7899	161.1649	167.7444
Date/Time of wt. 10-31/8A	Gross wt. g	156.7894	161.1653	167.7448
	Avg. Gross wt. g	156.7897	161.1651	167.7446
	Tare wt. g	156.7750	161.1531	167.7333
Weight of soluble particulate from water	g	0.0147	0.0120	0.0113
*Total Weight of insoluble particulate on Filters	g	0.0033	0.0035	0.0038
Less Blank wt (W_a)	g	0.0007	0.0006	0.0007
Total weight of particulate (m_n)	g	0.0173	0.0149	0.0151

Remarks:

*SEE FILTRATION ANALYSIS

Signature of Analyst: [illegible]

Signature of Reviewer: [illegible]

D:\DONNA\FORMS\LAB\B.TBL

Form REC#8

SAMPLE ANALYTICAL DATA FORM

Company Name James Julian

Sample Location Back Half - Acetone

Relative Humidity in Lab 39 %

Blank Volume (V_a) 35 ml

Density of Acetone (ρ_a) 78.57 mg/ml

Date/Time wt. blank 10-26/00

Gross wt. 165.0977 g

Date/Time wt. blank 10-26/00

Gross wt. 165.0975 g

Ave. Gross wt. 165.0976 g

Tare wt. 165.0974 g

Weight of blank (m_{ab}) 0.0002 g

Acetone blank residue concentration (C_a) : (C_a) = (m_{ab}) / (V_a) (ρ_a) = (0.000007 mg/g)

Acetone Blank Wt. : $W_a = C_a V_{aw} \rho_a$ = (0.000007) (160) (0.7857) = (0.0009 g)

		Run # 1	Run # 2	Run # 3
Acetone rinse volume (V_{aw})	ml	160	160	160
Date/Time of wt. 10-30/1300	Gross wt. g	101.6659	94.4880	100.4749
Date/Time of wt. 10-31/00	Gross wt. g	101.6664	94.4885	100.4754
	Average Gross wt. g	101.6662	94.4883	100.4752
	Tare wt. g	101.6593	94.4853	100.4641
	Less Acetone blank wt. (W_a) g	0.0009	0.0009	0.0009
Weight of particulate in acetone rinse (m_a)	g	0.0060	0.0021	0.0102

Filter Numbers	#			
Date/Time of wt.	Gross wt. g			
Date/Time of wt.	Gross wt. g			
	Average Gross wt. g			
	Tare wt. g			

Weight of particulate on filter (m_f)	g			
Weight of particulate in acetone rinse (m_a)	g			
Total weight of particulate (m_p)	g			

NOTE: In no case should a blank residue greater than 0.01 mg/g (or 0.001% of the blank weight) be subtracted from the sample weight.

Remarks:

Signature of Analyst [illegible] Signature of Reviewer [illegible]

D:\DONNA\FORMS\LAB\SAMPLE.rtf

VII. CALCULATIONS

JAMES JULIAN
PERRY TOWNSHIP, PENNSYLVANIA

SUMMARY OF TEST DATA

		10-16-91 RUN #1	10-16-91 RUN #2	10-16-91 RUN #3
SAMPLING TRAIN DATA				
	start	11:14	13:54	16:05
	finish	12:34	15:23	17:58
1. Sampling time, minutes	θ	72.0	72.0	72.0
2. Sampling nozzle diameter, in.	D_n	.3250	.3250	.3250
3. Sampling nozzle cross-sect. area, ft^2	A_n	.000576	.000576	.000576
4. Isokinetic variation	I	102.4	98.6	98.5
5. Sample gas volume - meter cond., cf.	V_m	55.925	67.444	63.740
6. Average meter temperature, ^oR	T_m	539	545	545
7. Avg. oriface pressure drop, in. H_2O	dH	2.04	2.77	2.55
8. Total particulate collected, mg.	M_n	255.50	328.30	371.40
VELOCITY TRAVERSE DATA				
9. Stack area, ft^2	A	17.10	17.10	17.10
10. Absolute stack gas pressure, in. Hg.	P_s	29.80	29.80	29.80
11. Barometric pressure, in. Hg.	P_{bar}	29.80	29.80	29.80
12. Avg. absolute stack temperature, R^o	T_s	614	611	614
13. Average $\sqrt{vel. head}$, (C_p= .84)	$\sqrt{dP}$	0.53	0.63	0.60
14. Average stack gas velocity, ft./sec.	V_s	33.37	39.37	37.63
STACK MOISTURE CONTENT				
15. Total water collected by train, ml.	V_{lc}	386.00	378.20	367.00
16. Moisture in stack gas, %	B_{ws}	24.98	21.42	21.80
EMISSIONS DATA				
17. Stack gas flow rate, dscf/hr.(000's)	Q_{sd}	1319	1639	1551
18. Stack gas flow rate, cfm	acfm	34238	40394	38608
19. Particulate concentration, gr/dscf	C_s	0.0720	0.0774	0.0927
20. Particulate concentration, lb/hr	E	13.58	18.12	20.55
21. Particulate concentration, lb/mBtu	E'	0.00000	0.00000	0.00000
ORSAT DATA				
22. Percent CO_2 by volume	CO_2	8.70	7.00	7.00
23. Percent O_2 by volume	O_2	8.40	10.50	10.30
24. Percent CO by volume	CO	.00	.00	.00
25. Percent N_2 by volume	N_2	82.90	82.50	82.70

Format: summaryR3

Dry Gas Volume

$$V_{m(std)} = V_m \left[\frac{T_{(std)}}{T_m} \right] \left[\frac{P_{bar} + \frac{dH}{13.6}}{P_{(std)}} \right] = 17.64 \frac{^oR}{in.Hg} \; Y \; V_m \left[\frac{P_{bar} + \frac{dH}{13.6}}{T_m} \right]$$

Where:

$V_{m(std)}$ = Dry Gas Volume through meter at standard conditions, cu. ft.

V_m = Dry Gas Volume measured by meter, cu. ft.

P_{bar} = Barometric pressure at oriface meter, in. Hg.

P_{std} = Standard absolute pressure, (29.92 in. Hg.).

T_m = Absolute temperature at meter ^oR.

T_{std} = Standard absolute temperature (528^oR).

dH = Average pressure drop across oriface meter, in. H_2O.

Y = Dry gas meter calibration factor.

13.6 = Inches water per inches Hg.

RUN 1:

$$V_{m(std)} = (17.64)(.997)(55.925) \left[\frac{(29.80) + \frac{2.04}{13.6}}{539} \right] = 54.652 \text{ dscf}$$

RUN 2:

$$V_{m(std)} = (17.64)(.997)(67.444) \left[\frac{(29.80) + \frac{2.77}{13.6}}{545} \right] = 65.300 \text{ dscf}$$

RUN 3:

$$V_{m(std)} = (17.64)(.997)(63.740) \left[\frac{(29.80) + \frac{2.55}{13.6}}{545} \right] = 61.681 \text{ dscf}$$

Particulate concentration C_s' gr./dscf.

$$C_s' = \left[0.0154 \frac{gr}{mg} \right] \left[\frac{M_n}{V_{m(std)}} \right]$$

Where:

C_s' = Concentration of particulate matter in stack gas, dry basis, corrected to standard conditions, gr./dscf.

M_n = Total amount of particulate matter collected, mg.

$V_{m(std)}$ = Dry gas volume through meter at standard conditions, cu. ft.

Run 1:

$$C_s' = \left[0.0154 \frac{gr}{mg} \right] \left[\frac{255.50}{54.652} \right] = 0.0720 \text{ gr./dscf.}$$

Run 2:

$$C_s' = \left[0.0154 \frac{gr}{mg} \right] \left[\frac{328.30}{65.300} \right] = 0.0774 \text{ gr./dscf.}$$

Run 3:

$$C_s' = \left[0.0154 \frac{gr}{mg} \right] \left[\frac{371.40}{61.681} \right] = 0.0927 \text{ gr./dscf.}$$

Dry Molecular Weight

$$M_d = 0.44(\%CO_2) + 0.32(\%O_2) + 0.28(\%CO + \%N_2)$$

Where:

M_d = Dry molecular weight, lb./lb.-mole.

$\%CO_2$ = Percent carbon dioxide by volume (dry basis).

$\%O_2$ = Percent oxygen by volume (dry basis).

$\%N_2$ = Percent nitrogen by volume (dry basis).

$\%CO$ = Percent carbon monoxide by volume (dry basis).

0.264 = Ratio of O_2 to N_2 in air, v/v.

0.28 = Molecular weight of N_2 or CO, divided by 100.

0.32 = Molecular weight of O_2 divided by 100.

0.44 = Molecular weight of CO_2 divided by 100.

Run 1:

$$M_d = 0.44(8.70\%) + 0.32(8.40\%) + 0.28(.00\% + 82.90\%) = 29.73 \ \frac{lb}{lb\text{-}mole}$$

Run 2:

$$M_d = 0.44(7.00\%) + 0.32(10.50\%) + 0.28(.00\% + 82.50\%) = 29.54 \ \frac{lb}{lb\text{-}mole}$$

Run 3:

$$M_d = 0.44(7.00\%) + 0.32(10.30\%) + 0.28(.00\% + 82.70\%) = 29.53 \ \frac{lb}{lb\text{-}mole}$$

Water Vapor Condensed

$$V_{wc_{std}} = \left[V_f - V_i \right] \left[\frac{P_w \; R \; T_{(std)}}{M_w \; P_{(std)}} \right] = 0.04707 \left[V_f - V_i \right]$$

$$V_{wsg_{std}} = \left[W_f - W_i \right] \left[\frac{R \; T_{(std)}}{M_w \; P_{(std)}} \right] = 0.04715 \left[W_f - W_i \right]$$

Where:

0.04707 = Conversion factor, $ft.^3/ml.$

0.04715 = Conversion factor, $ft.^3/g.$

$V_{wc_{std}}$ = Volume of water vapor condensed (standard conditions), scf.

$V_{wsg_{std}}$ = Volume of water vapor collected in silica gel (standard conditions), ml.

$V_f - V_i$ = Final volume of impinger contents less initial volume, ml.

$W_f - W_i$ = Final weight of silica gel less initial weight, g.

P_w = Density of water, 0.002201 lb/ml.

R = Ideal gas constant, 21.85 in.Hg. (cu.ft./lb.-mole)(^oR).

M_w = Molecular weight of water vapor, 18.0 lb/lb-mole.

T_{std} = Absolute temperature at standard conditions, 528^oR.

P_{std} = Absolute pressure at standard conditions, 29.92 inches Hg.

Run 1:

$V_{wc(std)}$ = (0.04707) (370.0) = 17.4 cu.ft
$V_{wsg(std)}$ = (0.04715) (16.0) = 0.8 cu.ft

Run 2:

$V_{wc(std)}$ = (0.04707) (360.0) = 16.9 cu.ft
$V_{wsg(std)}$ = (0.04715) (18.2) = 0.9 cu.ft

Run 3:

$V_{wc(std)}$ = (0.04707) (345.0) = 16.2 cu.ft
$V_{wsg(std)}$ = (0.04715) (22.0) = 1.0 cu.ft

Moisture Content of Stack Gases

$$B_{ws} = \frac{V_{wc_{std}} + V_{wsg_{std}}}{V_{wc_{std}} + V_{wsg_{std}} + V_{m_{std}}} \times 100$$

Where:

B_{ws} = Proportion of water vapor, by volume, in the gas stream.

V_m = Dry gas volume measured by dry gas meter,(dcf).

$V_{wc_{std}}$ = Volume of water vapor condensed corrected to standard conditions (scf).

$V_{wsg_{std}}$ = Volume of water vapor collected in silica gel corrected to standard conditions (scf).

Run 1:

$$B_{ws} = \frac{17.4 + 0.8}{17.4 + 0.8 + 54.652} \times 100 = 24.98\ \%$$

Run 2:

$$B_{ws} = \frac{16.9 + 0.9}{16.9 + 0.9 + 65.300} \times 100 = 21.42\ \%$$

Run 3:

$$B_{ws} = \frac{16.2 + 1.0}{16.2 + 1.0 + 61.681} \times 100 = 21.80\ \%$$

Molecular Weight of Stack Gases

$$M_s = M_d (1 - B_{ws}) + 18 (B_{ws})$$

Where:

M_s = Molecular weight of stack gas, wet basis, (lb./lb.-mole).

M_d = Molecular weight of stack gas, dry basis, (lb./lb.-mole).

Run 1:

$$M_s = 29.73 (1 - 24.98) + 18 (24.98) = 26.80 \text{ (lb./lb.-mole)}$$

Run 2:

$$M_s = 29.54 (1 - 21.42) + 18 (21.42) = 27.07 \text{ (lb./lb.-mole)}$$

Run 3:

$$M_s = 29.53 (1 - 21.80) + 18 (21.80) = 27.02 \text{ (lb./lb.-mole)}$$

Stack Gas Velocity

$$V_s = K_p \, C_p \left[\sqrt{dP} \right] \text{avg.} \sqrt{\frac{T_s(\text{avg.})}{P_s \; M_s}}$$

Where:

V_s = Average velocity of gas stream in stack, ft./sec.

K_p = 85.49 ft/sec $\left[(g/g\text{-mole})\text{-}(mm\ Hg) \ / \ (^{o}K)(\ mm\ H_2O \right]^{1/2}$

C_p = Pitot tube coefficient, (dimensionless).

dP = Velocity head of stack gas, in. H_2O.

P_{bar} = Barometric pressure at measurement site, (in. Hg).

P_g = Stack static pressure, (in. Hg).

P_s = Absolute stack gas pressure, (in. Hg) = $P_{bar} + P_g$

P_{std} = Standard absolute pressure, (29.92 in. Hg).

t_s = Stack temperature, (^{o}F).

T_s = Absolute stack temperature, (^{o}R). = 460 + t_s.

M_s = Molecular weight of stack gas, wet basis, (lb/lb-mole).

Run 1:

$$V = (85.49)\ (\ .84)\ (\ 0.53)\ \sqrt{\frac{614}{(29.80)(26.80)}} = 33.37 \text{ ft/sec.}$$

Run 2:

$$V = (85.49)\ (\ .84)\ (\ 0.63)\ \sqrt{\frac{611}{(29.80)(27.07)}} = 39.37 \text{ ft/sec.}$$

Run 3:

$$V = (85.49)\ (\ .84)\ (\ 0.60)\ \sqrt{\frac{614}{(29.80)(27.02)}} = 37.63 \text{ ft/sec.}$$

Stack Gas Flow Rate

$$Q_{sd} = 3600 \left[1 - B_{wc} \right] V_s \; A \cdot \left[\frac{T_{std}}{T_{stk}} \right] \left[\frac{P_s}{P_{std}} \right]$$

Where:

Q_{sd} = Dry volumetric stack gas flow rate corrected to standard conditions, (dscf/hr).

A = Cross sectional area of stack, ($ft.^2$).

3600 = Conversion factor, (sec./hr.).

t_s = Stack temperature, (^oF).

T_s = Absolute stack temperature, (^oR).

T_{std} = Standard absolute temperature, (528^oR).

P_{bar} = Barometric pressure at measurement site, (in.Hg.).

P_g = Stack static pressure, (in.Hg.).

P_s = Absolute stack gas pressure, (in.Hg.); = $P_{bar} + P_g$

P_{std} = Standard absolute pressure, (29.92 in.Hg.).

Run 1:

$$Q_{sd} = 3600(1 - .2498)(33.37)(17.10)\left[\frac{528}{614}\right]\left[\frac{29.80}{29.92}\right] = 1319933.7 \; \frac{dscf}{hr}$$

Run 2:

$$Q_{sd} = 3600(1 - .2142)(39.37)(17.10)\left[\frac{528}{611}\right]\left[\frac{29.80}{29.92}\right] = 1639167.9 \; \frac{dscf}{hr}$$

Run 3:

$$Q_{sd} = 3600(1 - .2180)(37.63)(17.10)\left[\frac{528}{614}\right]\left[\frac{29.80}{29.92}\right] = 1551528.7 \; \frac{dscf}{hr}$$

Emissions Rate from Stack

$$E = \frac{(C_s)(Q_{sd})}{7000 \text{ gr./lb.}} = \text{lb. / hr.}$$

Where:

E = Emissions rate, lb/hr.

C_s = Concentration of particulate matter in stack gas, dry basis, corrected to standard conditions, gr/dscf.

Q_{sd} = Dry volumetric stack gas flow rate corrected to standard conditions, dscf/hr.

Run 1:

$$E = \frac{(0.0720)(1319933.7)}{7000} = 13.58 \text{ lb. / hr.}$$

Run 2:

$$E = \frac{(0.0774)(1639167.9)}{7000} = 18.12 \text{ lb. / hr.}$$

Run 3:

$$E = \frac{(0.0927)(1551528.7)}{7000} = 20.55 \text{ lb. / hr.}$$

Isokinetic Variation

$$I = 100\ T_s \left[\frac{0.002669\ \frac{V_{lc}}{60} + (V_m / T_m)\ (P_{bar} + dH / 13.6)}{\Theta\ V_s\ P_s\ A_n} \right]$$

Where:

I	=	Percent isokinetic sampling.
100	=	Conversion to percent.
T_s	=	Absolute average stack gas temperature, ^oR.
0.002669	=	Conversion factor, Hg - ft^3/ml - ^oR.
V_{lc}	=	Ttl vol of liquid collected in impingers and silica gel, ml.
T_m	=	Absolute average dry gas meter temperature, ^oR.
P_{bar}	=	Barometric pressure at sampling site, (in. Hg).
dH	=	Av pressure differential across the oriface meter, (in.H_2O).
13.6	=	Specific gravity of mercury.
60	=	Conversion seconds to minutes.
Θ	=	Total sampling time, minutes.
V_s	=	Stack gas velocity, ft./sec.
P_s	=	Absolute stack gas pressure, in. Hg.
A_n	=	Cross sectional area of nozzle, ft^2.

Run 1:

$$I = (100)(614)\left[\frac{(0.002669)(386.0) + \frac{55.925}{539}\left[29.80 + \frac{2.04}{13.6}\right]}{60\ (72.0)\ (33.37)\ (29.80)\ (.000576)} \right] = 102.44$$

Run 2:

$$I = (100)(611)\left[\frac{(0.002669)(378.2) + \frac{67.444}{545}\left[29.80 + \frac{2.77}{13.6}\right]}{60\ (72.0)\ (39.37)\ (29.80)\ (.000576)} \right] = 98.66$$

Run 3:

$$I = (100)(614)\left[\frac{(0.002669)(367.0) + \frac{63.740}{545}\left[29.80 + \frac{2.55}{13.6}\right]}{60\ (72.0)\ (37.63)\ (29.80)\ (.000576)} \right] = 98.54$$

NAME: JAMES JULIAN, INC.
LOCATION: PERRY TOWNSHIP, PENNSYLVANIA

DATE: 10-16-91

TOTAL HYDROCARBON EMISSIONS: Convert ppm (wet) to ppm (dry)

$$ppm_d = ppm_w \left(\frac{100}{100 - B_{ws}} \right)$$

Where: ppm_d = Parts per million, dry basis.

ppm_w = Parts per million, wet basis (as measured by the instrument).

B_{ws} = Proportion of water vapor, by volume, in the gas stream.

Run #1:

$$(202.5) \left(\frac{100}{100 - 24.98} \right) = 269.9 \ ppm_d$$

Run #2:

$$(195.1) \left(\frac{100}{100 - 21.42} \right) = 248.3 \ ppm_d$$

Run #3:

$$(192.7) \left(\frac{100}{100 - 21.80} \right) = 246.4 \ ppm_d$$

NAME: JAMES JULIAN, INC.
LOCATION: PERRY TOWNSHIP, PENNSYLVANIA

DATE: 10-16-91

TOTAL HYDROCARBON EMISSIONS: POUNDS PER HOUR

$$E = (2.59 \times 10^{-9})\ (M_d)\ (ppm_d)\ (Q_{sd})$$

Where:

E = Total hydrocarbon, as methane, emissions rate, lbs/hr.

2.59×10^{-9} = Conversion factor, lbs/dscf.

M_d = CH_4 dry molecular weight (16.04).

Q_{sd} = Dry volumetric stack gas flow rate corrected to std. conditions, dscf/hr.

ppm_d = Parts per million, dry basis.

Run #1:

$$E = (2.59 \times 10^{-9})\ (16.04)\ (269.9)\ (1{,}319{,}933.7) = 14.60\ \frac{lbs}{hr} \text{ as methane}$$

Run #2:

$$E = (2.59 \times 10^{-9})\ (16.04)\ (248.3)\ (1{,}639{,}167.9) = 16.91\ \frac{lbs}{hr} \text{ as methane}$$

Run 3:

$$E = (2.59 \times 10^{-9})\ (16.04)\ (246.4)\ (1{,}551{,}528.7) = 15.88\ \frac{lbs}{hr} \text{ as methane}$$

NAME: JAMES JULIAN, INC.
LOCATION: PERRY TOWNSHIP, PENNSYLVANIA

DATE: 10-16-91

TOTAL HYDROCARBON EMISSIONS: POUNDS PER TON OF PRODUCTION

$$E = \frac{\text{lbs/hr Particulate}}{\text{tons/hr Produced}}$$

Run #1:

$$E = \frac{(14.80 \text{ lbs/hr})}{(389.2 \text{ tons})} = 0.038 \frac{\text{lbs}}{\text{tons}}$$

Run #2:

$$E = \frac{(16.91 \text{ lbs/hr})}{(398.0 \text{ tons})} = 0.042 \frac{\text{lbs}}{\text{tons}}$$

Run #3:

$$E = \frac{(15.88 \text{ lbs/hr})}{(400.0 \text{ tons})} = 0.040 \frac{\text{lbs}}{\text{tons}}$$

VII. FIELD DATA

A. INSTRUMENTAL

JAMES JULIAN, INC.

RUN # 1 DATA LISTING

NAME: RAMCON ENVIRONMENTAL LOCATION: JAMES JULIAN

CHAN NAME		HC	CO2	O2
CHAN UNITS		ppm	%	%
FULL SCALE		300.0	20.0	25.0
ZERO OFFSET		0.0	0.0	0.0
START / CHANNEL		01	02	03
10/16/91	11:14	201.0	8.8	8.3
10/16/91	11:15	202.5	8.8	8.3
10/16/91	11:16	202.5	8.8	8.3
10/16/91	11:17	204.0	8.8	8.2
10/16/91	11:18	205.5	8.8	8.2
10/16/91	11:19	217.5	8.8	8.3
10/16/91	11:20	198.0	1.1	16.8
10/16/91	11:21	181.5	3.0	17.7
10/16/91	11:22	172.5	8.0	10.0
10/16/91	11:23	187.5	8.7	8.4
10/16/91	11:24	195.0	9.4	7.7
10/16/91	11:25	207.0	9.7	7.3
10/16/91	11:26	223.5	10.1	7.0
10/16/91	11:27	228.0	10.2	6.7
10/16/91	11:28	226.5	10.2	6.7
10/16/91	11:29	231.0	10.2	6.7
10/16/91	11:30	232.5	10.2	6.7
10/16/91	11:31	232.5	10.2	6.7
10/16/91	11:32	190.0	8.2	8.9
10/16/91	11:33	190.0	7.9	9.4
10/16/91	11:34	186.0	8.3	8.9
10/16/91	11:35	189.0	8.0	9.3
10/16/91	11:36	184.5	7.9	9.4
10/16/91	11:37	181.5	7.8	9.5
10/16/91	11:38	183.0	7.7	9.6
10/16/91	11:39	190.5	8.2	9.3
10/16/91	11:40	193.5	8.6	8.5
10/16/91	11:41	195.0	8.6	8.4
10/16/91	11:42	192.0	8.7	8.4
10/16/91	11:43	189.0	8.6	8.4
10/16/91	11:44	189.0	8.6	8.4
10/16/91	11:45	196.5	8.7	8.4
10/16/91	11:46	199.5	9.3	7.7
10/16/91	11:47	210.0	9.6	7.4
10/16/91	11:48	199.5	9.5	7.3
10/16/91	11:49	198.0	9.2	7.7
10/16/91	11:50	198.0	9.1	7.8
10/16/91	11:51	196.5	9.1	7.7
10/16/91	11:52	199.5	9.1	7.8
10/16/91	11:53	201.0	9.1	7.8
10/16/91	11:54	198.0	9.1	7.8
10/16/91	11:55	199.5	9.1	7.8
10/16/91	11:56	198.0	9.0	7.9

JAMES JULIAN, INC.

RUN # 1 DATA LISTING

NAME: RAMCON ENVIRONMENTAL LOCATION: JAMES JULIAN

CHAN NAME		HC	CO2	O2
CHAN UNITS		ppm	%	%
FULL SCALE		300.0	20.0	25.0
ZERO OFFSET		0.0	0.0	0.0
START / CHANNEL		01	02	03
10/16/91	11:57	198.0	8.9	8.0
10/16/91	11:58	198.0	8.9	8.0
10/16/91	11:59	198.0	8.9	8.0
10/16/91	12:00	196.5	8.8	8.1
10/16/91	12:01	196.5	8.8	8.1
10/16/91	12:02	198.0	8.8	8.1
10/16/91	12:03	201.0	8.8	8.2
10/16/91	12:04	199.5	8.7	8.2
10/16/91	12:05	199.5	8.8	8.1
10/16/91	12:06	202.5	8.9	8.0
10/16/91	12:07	202.5	9.0	7.9
10/16/91	12:08	201.0	8.9	7.9
10/16/91	12:09	201.0	8.9	7.9
10/16/91	12:10	199.5	8.8	8.0
10/16/91	12:11	201.0	8.7	8.2
10/16/91	12:12	202.5	8.6	8.3
10/16/91	12:13	198.0	8.7	8.3
10/16/91	12:14	202.5	8.8	8.1
10/16/91	12:15	202.5	8.7	8.2
10/16/91	12:16	201.0	8.8	8.1
10/16/91	12:17	202.5	8.8	8.0
10/16/91	12:18	204.0	8.8	8.0
10/16/91	12:19	202.5	8.7	8.2
10/16/91	12:20	201.0	8.7	8.2
10/16/91	12:21	199.5	8.7	8.2
10/16/91	12:22	201.0	8.7	8.2
10/16/91	12:23	201.0	8.7	8.2
10/16/91	12:24	208.5	8.7	8.1
10/16/91	12:25	214.5	8.6	8.3
10/16/91	12:26	216.0	8.6	8.3
10/16/91	12:27	222.0	8.6	8.3
10/16/91	12:28	228.0	8.7	8.2
10/16/91	12:29	232.5	8.6	8.3
10/16/91	12:30	232.5	8.6	8.3
10/16/91	12:31	237.0	8.5	8.4
Averages:		202.5	8.7	8.4

JAMES JULIAN, INC.

RUN # 2 DATA LISTING

NAME: RAMCON ENVIRONMENTAL LOCATION: JAMES JULIAN

CHAN NAME		HC	CO2	O2
CHAN UNITS		ppm	%	%
FULL SCALE		300.0	20.0	25.0
ZERO OFFSET		0.0	0.0	0.0
START / CHANNEL		01	02	03
10/16/91	13:54	209.9	7.6	10.0
10/16/91	13:55	216.2	7.8	9.6
10/16/91	13:56	212.3	7.5	9.9
10/16/91	13:57	211.5	7.4	10.1
10/16/91	13:58	183.3	7.2	10.3
10/16/91	13:59	182.4	6.8	10.8
10/16/91	14:00	183.3	6.7	11.0
10/16/91	14:01	186.2	6.7	11.0
10/16/91	14:02	185.6	6.7	11.0
10/16/91	14:03	188.1	6.7	11.0
10/16/91	14:04	186.5	6.7	11.0
10/16/91	14:05	184.4	6.8	10.8
10/16/91	14:06	180.6	6.9	10.7
10/16/91	14:07	183.5	6.7	10.9
10/16/91	14:08	188.0	7.0	10.7
10/16/91	14:09	189.5	7.3	10.3
10/16/91	14:10	190.4	7.3	10.2
10/16/91	14:11	189.9	7.3	10.1
10/16/91	14:12	187.8	7.3	10.2
10/16/91	14:13	189.3	7.2	10.3
10/16/91	14:14	190.7	7.2	10.3
10/16/91	14:15	192.2	7.2	10.3
10/16/91	14:16	194.4	7.2	10.3
10/16/91	14:17	194.1	7.0	10.5
10/16/91	14:18	194.9	6.9	10.6
10/16/91	14:19	196.1	6.9	10.7
10/16/91	14:20	198.9	6.9	10.7
10/16/91	14:21	194.0	6.9	10.6
10/16/91	14:22	182.1	6.4	11.1
10/16/91	14:23	176.0	6.2	11.5
10/16/91	14:24	177.8	6.1	11.6
10/16/91	14:25	188.1	7.0	10.8
10/16/91	14:26	192.2	7.2	10.3
10/16/91	14:27	197.7	7.2	10.3
10/16/91	14:28	198.9	7.3	10.2
10/16/91	14:29	194.1	7.3	10.1
10/16/91	14:30	193.4	7.3	10.1
10/16/91	14:31	198.9	7.3	10.1
10/16/91	14:32	195.2	7.3	10.1
10/16/91	14:33	196.4	7.3	10.1
10/16/91	14:34	196.4	7.4	10.0
10/16/91	14:35	198.6	7.3	10.0
10/16/91	14:36	200.3	7.2	10.2

JAMES JULIAN, INC.

RUN # 2 DATA LISTING

NAME: RAMCON ENVIRONMENTAL LOCATION: JAMES JULIAN

CHAN NAME		HC	CO2	O2
CHAN UNITS		ppm	%	%
FULL SCALE		300.0	20.0	25.0
ZERO OFFSET		0.0	0.0	0.0
START / CHANNEL		01	02	03
10/16/91	14:37	202.1	7.3	10.1
10/16/91	14:38	201.9	7.3	10.0
10/16/91	14:39	200.7	7.4	10.0
10/16/91	14:40	200.0	7.4	10.0
10/16/91	14:41	199.5	7.4	9.9
10/16/91	14:42	210.3	7.3	10.1
10/16/91	14:43	211.2	7.1	10.2
10/16/91	14:44	210.2	7.3	10.1
10/16/91	14:45	211.2	7.1	10.2
10/16/91	14:46	211.5	6.8	10.6
10/16/91	14:47	206.9	6.6	10.8
10/16/91	14:48	213.6	6.5	11.0
10/16/91	14:49	208.8	6.5	11.0
10/16/91	14:50	191.6	6.5	11.1
10/16/91	14:51	182.6	6.3	11.3
10/16/91	14:52	177.5	6.3	11.3
Averages:		195.1	7.0	10.5

JAMES JULIAN, INC.

RUN # 3 DATA LISTING

NAME: RAMCON ENVIRONMENTAL LOCATION: JAMES JULIAN

CHAN NAME		HC	CO2	O2
CHAN UNITS		ppm	%	%
FULL SCALE		300.0	20.0	25.0
ZERO OFFSET		0.0	0.0	0.0
START / CHANNEL		01	02	03
10/16/91	16:05	192.0	7.9	9.0
10/16/91	16:06	189.6	6.5	10.7
10/16/91	16:07	190.7	6.3	11.3
10/16/91	16:08	190.1	6.3	11.2
10/16/91	16:09	187.7	6.3	11.2
10/16/91	16:10	185.4	6.4	11.1
10/16/91	16:11	184.5	6.6	10.9
10/16/91	16:12	182.0	6.6	10.8
10/16/91	16:13	186.2	6.6	10.8
10/16/91	16:14	188.6	6.7	10.8
10/16/91	16:15	178.2	6.7	10.7
10/16/91	16:16	176.4	6.7	10.6
10/16/91	16:17	179.6	6.7	10.7
10/16/91	16:18	179.1	6.8	10.6
10/16/91	16:19	177.2	6.9	10.4
10/16/91	16:20	180.0	6.7	10.6
10/16/91	16:21	182.9	6.6	10.8
10/16/91	16:22	184.7	6.6	10.8
10/16/91	16:23	188.3	6.5	11.0
10/16/91	16:24	185.4	6.5	10.9
10/16/91	16:25	183.8	6.5	11.0
10/16/91	16:26	186.3	6.3	11.1
10/16/91	16:27	187.8	6.3	11.2
10/16/91	16:28	188.4	6.3	11.3
10/16/91	16:29	188.9	6.2	11.3
10/16/91	16:30	190.5	6.0	11.5
10/16/91	16:31	189.0	6.0	11.6
10/16/91	16:32	183.9	5.9	11.6
10/16/91	16:33	180.5	5.9	11.7
10/16/91	16:34	184.1	6.0	11.6
10/16/91	16:35	184.1	6.2	11.3
10/16/91	16:36	186.2	6.3	11.2
10/16/91	16:37	188.9	6.3	11.2
10/16/91	16:38	186.6	6.3	11.2
10/16/91	16:39	188.6	6.2	11.3
10/16/91	16:40	191.1	6.2	11.3
10/16/91	16:41	191.1	6.1	11.4
10/16/91	16:42	190.2	6.1	11.4
10/16/91	16:43	188.9	6.1	11.4
10/16/91	16:44	185.6	6.1	11.4
10/16/91	16:45	184.5	6.1	11.4
10/16/91	16:46	186.2	6.0	11.5
10/16/91	16:47	188.3	6.0	11.5

JAMES JULIAN, INC.

RUN # 3 DATA LISTING

NAME: RAMCON ENVIRONMENTAL LOCATION: JAMES JULIAN

CHAN NAME		HC	CO2	O2
CHAN UNITS		ppm	%	%
FULL SCALE		300.0	20.0	25.0
ZERO OFFSET		0.0	0.0	0.0
START / CHANNEL		01	02	03
10/16/91	16:48	184.5	6.1	11.4
10/16/91	16:49	185.1	6.1	11.4
10/16/91	16:50	180.2	6.1	11.4
10/16/91	16:51	167.7	6.1	11.4

JAMES JULIAN, INC.

RUN # 3 DATA LISTING

NAME: RAMCON ENVIRONMENTAL LOCATION: JAMES JULIAN

CHAN NAME		HC	CO2	O2
CHAN UNITS		ppm	%	%
FULL SCALE		300.0	20.0	25.0
ZERO OFFSET		0.0	0.0	0.0
START / CHANNEL		01	02	03
10/16/91	17:14	201.6	8.8	7.9
10/16/91	17:15	229.4	9.3	7.3
10/16/91	17:16	240.2	9.3	7.2
10/16/91	17:17	217.8	8.0	9.2
10/16/91	17:18	215.4	8.0	8.4
10/16/91	17:19	218.4	8.2	8.9
10/16/91	17:20	213.2	7.9	8.9
10/16/91	17:21	204.6	7.5	9.5
10/16/91	17:22	186.5	6.5	10.7
10/16/91	17:23	173.3	6.6	10.8
10/16/91	17:24	176.9	6.9	10.4
10/16/91	17:25	182.3	6.7	10.5
10/16/91	17:26	182.0	6.5	10.8
10/16/91	17:27	180.6	6.5	10.9
10/16/91	17:28	178.4	6.9	10.6
Averages:		192.7	7.0	10.3

VII. FIELD DATA

B. PARTICULATE

RAMCON ENVIRONMENTAL CORPORATION

Plant James Julian

Location Perry Twp, PA
Operator W. J. Lockett
Date 10-4-91
Run No. 1
Sample Box No. 1
Meter Box No. C-124
Meter H @ 1.94
C Factor .997
Pitot Tube Coefficient Cp .84

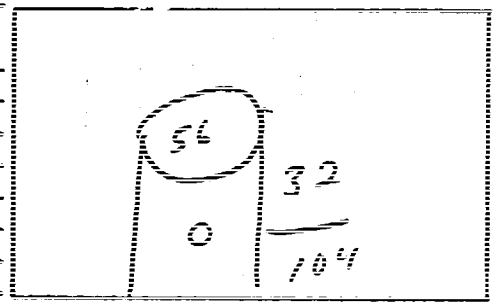

Ambient Temperature	95		
Barometric Pressure	24.50 mm	570	440
Assumed Moisture, %	25 mm	200	024
Probe Length, m(ft)	5' mm	370	16
Nozzle Identification No.	.0005720		
Avg. Calibrated Nozzle Dia., (in.)	.1246/.1247		
Probe Heater Setting	5		
Leak Rate, m³/min. (cfm)	.00125"		
Probe Liner Material	Glass		
Static Pressure, mm Hg(in.Hg)			
Filter No.	A75498	.5631	

Schematic of Stack Cross Section

TRAV. PT NO.	SAMPLING TIME (θ)min.	VACUUM in. Hg	STACK TEMP (Ts) °F	VELOCITY HEAD (Ps) in H2O	PRESSURE DIFF. ORF. MTR in H2O	GAS SAMPLE VOLUME ft³	GAS SAMPLE TEMP. AT DRY GAS METER °F Inlet	Outlet	FILTER HOLDER TEMP °F	GAS TEMP LVG CONDENSER OR LAST IMPINGER °F
A 1	11:14 / 11:17	2	150	.17	1.2	653.2 / 655.1	59	58	260	50
2	11:22 / 11:25	2	145	.23	1.6	657.1	74	58	260	50
3	11:28	2	155	.25	1.8	659.3	80	58	265	45
4	11:31	2	155	.23	1.6	661.4	84	61	265	45
5	11:34	2	155	.23	1.6	663.6	89	60	275	45
6	11:37	2	150	.25	1.8	665.7	88	60	260	48
7	11:40	3	150	.27	1.9	667.9	90	62	265	45
8	11:43	2	150	.24	1.7	670.2	92	64	250	45
9	11:46	3	155	.30	2.1	672.0	94	64	240	45
10	11:49	3	155	.26	1.9	674.8	94	64	265	45
11	11:52	3	155	.36	2.6	677.5	96	66	250	45
12	11:45	4	155	.40	2.9	680.2	98	68	240	45

← Plant Shut Down

Form #RRC-05

Form MRC-86

Humidity chamber test log sheet, cont. DATE 6/4/91 LOCATION Tent 4 TEST NO. 1

Number	Time	Vacuum in Hg (in. Hg)	Stack Temp. °F	Velocity mm/sec	Orifice mm H2O (in. H2O)	Gas volume m³ (ft³)	Gas sample temp. (°F)		Sample time (min)	Sample time (min)
1	1103	4	155	47	3.0	1031.1	69	69	76	5215
2	1104	4	155	44	2.6	1659.9	69	69	76	5225
3	1105	4	155	43	2.7	1688.3	69	69	76	5235
4	1106	4	155	43	2.5	1716.8	69	69	76	5245
5	1107	5	155	43	2.3	1745.3	69	69	76	5255
6	1108	5	155	43	1.9	1773.8	69	69	76	5265
7	1109	5	155	43	1.4	1802.1	69	69	76	5275
8	1110	5	155	43	1.4	1830.4	69	69	76	5285
9	1111	5	155	43	1.4	1858.6	69	69	76	5295
10	1112	4	155	43	1.6	1886.8	69	69	76	5305
11	1113	4	155	43	1.5	1914.9	69	69	76	5315
12	1114	4	155	43	3.0	1943.0	69	69	76	5325
13										
14										
15										
16										
17										
18										

RAMCON ENVIRONMENTAL CORPORATION

Plant James Julian

Location Perry Township, PA
Operator W.S. Ackratt
Date 10-16-91
Run No. 2
Sample Box No. 1
Meter Box No. C-124
Meter H @ 1.94
C Factor .997
Pitot Tube Coefficient Cp .84

Ambient Temperature 40°
Barometric Pressure 29.20 mm 560 | 54.1
Assumed Moisture, % 25 mmHg 300 | 49.9
Probe Length, m(ft) 5' mmHg 360 | 18.2
Nozzle Identification No. .0006210
Avg. Calibrated Nozzle Dia., (in.) .310/.310/.307
Probe Heater Setting 5
Leak Rate, m³/min. (cfm) .00165'
Probe Liner Material Glass
Static Pressure, mm Hg(in.Hg)
Filter No. PT-5497 0.5612

Schematic of Stack Cross Section

TRAV. PT NO.	SAMPLING TIME (θ)min.	VACUUM in. Hg	STACK TEMP (Ts) °F	VELOCITY HEAD (Ps) in H20	PRESSURE DIFF. ORF. MTR in H20	GAS SAMPLE VOLUME ft³	GAS SAMPLE TEMP. AT DRY GAS METER °F Inlet	Outlet	FILTER HOLDER TEMP °F	GAS TEMP LVG CONDENSER OR LAST IMPINGER °F
A 1	13:57 / 13:57	4	150	.55	3.9	709.6 / 712.1	72	72	250	45
2	14:00	4	150	.47	3.4	715.4	88	70	260	45
3	14:03	3	150	.45	3.2	718.7	94	70	260	45
4	14:06	3	150	.46	2.9	721.5	96	70	275	45
5	14:09	3	150	.45	3.2	724.4	98	70	280	45
6	14:12	3	150	.37	2.6	727.1	98	70	260	45
7	14:15	3	150	.32	2.2	729.6	100	72	260	45
8	14:18	3	150	.34	2.4	732.2	100	72	250	45
9	14:21	3	150	.36	2.6	734.8	102	72	255	45
10	14:24	3	150	.39	2.8	737.6	102	72	260	45
11	14:27	3	150	.30	2.1	740.0	102	74	260	45
12	14:30	3	150	.25	1.8	742.3	102	74	260	45

Form #RRC-05

Form ARBO-68

NATIONAL emissions test log sheet, cont. DATE 10/19/91 LOCATION [illegible] TEST NO. 2

TIME	VACUUM (in. Hg)	STACK TEMP (°F)	METER VOL. (cf)	DRY GAS METER TEMP (°F)	GAS SAMPLE VOL. (cf)	GAS SAMPLE TEMP (°F)	CONDENSATE (ml)	TIME
1	2	150	44	74	44	74	255	44
2	2	150	44	74	44	74	255	45
3	2	150	44	74	44	74	255	46
4	2	150	44	74	44	74	255	47
5	2	150	44	74	44	74	255	48
6	2	150	44	74	44	74	255	49
7	2	150	44	74	44	74	255	50
8	2	150	44	74	44	74	255	51
9	2	150	44	74	44	74	255	52
10	2	150	44	74	44	74	255	53
11	2	150	44	74	44	74	255	54
12	2	150	44	74	44	74	255	55
								(50)
								56
								57
								58
								59
								60
								61
								62
								63
								64
								65
								66
								67
								68
								69
								70
								71
								72
								73
								74
								75
								76
								77
								78
								79
								80
								81
								82
								83
								84
								85
								86
								87
								88
								89
								90
								91
								92
								93
								94
								95
								96
								97
								98
								99
								100

RAMCON ENVIRONMENTAL CORPORATION

Plant James Julian

Location Perry Twp, PA
Operator W. J. Lorentz
Date 10-16-91
Run No. # 3
Sample Box No. 1
Meter Box No. C-124
Meter H @ 1.99
C Factor .997
Pitot Tube Coefficient Cp .84

Ambient Temperature 55
Barometric Pressure 29.80 mm
Assumed Moisture, % 25 mm
Probe Length, m(ft) 5 mm

	545	428
	260	406
	345	22

Nozzle Identification No. .0005766
Avg. Calibrated Nozzle Dia., (in.) .3165/.3166/.3167
Probe Heater Setting 5
Leak Rate, m³/min. (cfm) .001 @ 5"
Probe Liner Material Glass
Static Pressure, mm Hg(in.Hg)
Filter No. PT-5499 0.562

Schematic of Stack Cross Section

TRAV. PT NO.	SAMPLING TIME (θ)min.	VACUUM in. Hg	STACK TEMP (T_s) °F	VELOCITY HEAD (P_s) in H2O	PRESSURE DIFF. ORF. MTR in H2O	GAS SAMPLE VOLUME ft³	GAS SAMPLE TEMP. AT DRY GAS METER °F Inlet	Outlet	FILTER HOLDER TEMP °F	GAS TEMP LVG CONDENSER OR LAST IMPINGER °F
A 1	~~16:05~~ 16:08	4	150	.44	3.1	~~777~~ 780.2	76	76	260	50
2	16:11	5	155	.48	3.4	783.2	92	74	260	50
3	16:14	5	155	.43	3.1	786.2	96	74	255	50
4	16:17	5	155	.42	3.0	789.1	98	74	250	50
5	16:20	5	155	.40	2.9	791.9	100	74	260	50
6	16:23	4	155	.36	2.5	794.6	100	74	260	50
7	16:26	4	155	.35	2.5	797.3	100	74	260	50
8	16:29	4	150	.37	2.6	800.0	102	74	260	50
9	16:32	5	155	.40	2.9	802.8	102	74	260	50
10	16:35	5	155	.39	2.8	805.6	102	74	260	50
11	16:38	5	155	.36	2.6	808.3	102	74	260	50
12	16:41	5	155	.35	2.5	811.0	102	74	260	50

Form #RRC_05

Form #REC-06

RAMCON emissions test log sheet, cont. DATE 10-16-91 LOCATION [illegible] TEST NO. 3

TRAVERSE POINT	SAMPLING TIME θ (min)	VACUUM mm Hg (in. Hg)	STACK TEMP T_s (°F)	VELOCITY HEAD ΔP_s (in H_2O)	ORFICE DIFF. PRESSURE ΔH (in H_2O)	GAS VOLUME V_m (ft^3)	GAS SAMPLE TEMP. (°F) in	GAS SAMPLE TEMP. (°F) out	SAMPLE BOX TEMP. (°F)	IMPINGER TEMP (°F)
B 1	16:44 / 16:47	4	155	.33	2.4	813.6	92	74	270	50
2	16:50	5	155	.38	2.7	816.5	101	76	270	50
3	17:16 / 17:19	4	160	.38	2.7	819.2	76	74	265	50
4	17:22	4	155	.37	2.6	821.8	86	74	280	50
5	17:31 / 17:37	5	160	.35	2.5	824.4	80	74	250	50
6	17:40	5	160	.30	2.1	826.8	96	74	260	50
7	17:43	5	155	.28	2.0	829.2	96	74	260	50
8	17:46	5	150	.27	1.9	831.4	96	74	260	50
9	17:49	5	150	.28	2.0	833.4	96	74	260	50
10	17:52	5	145	.25	1.8	836.2	98	74	260	50
11	17:55	5	145	.30	2.1	838.5	98	74	260	50
12	17:58	6	145	.35	2.5	841.040	98	74	260	50

* Plant down no trucks

@ Htr box out

(52)

IX. CALIBRATION

A. INSTRUMENTAL

INSTRUMENTAL ANALYSIS CALIBRATION DATA

TOTAL HYDROCARBONS

PLANT [illegible] LOCATION [illegible]

DATE [illegible] OPERATOR [illegible]

HC RANGE [illegible] RESPONSE TIME

INITIAL CALIBRATION: (Accuracy ±5% of calibration gas value)

Gas Type	Actual Concentration	Analyzer	Gas Type	Actual Concentration	Analyzer
HC - Zero	0	[illegible]	HC - Mid	[illegible]	[illegible]
HC - High	[illegible]	[illegible]	HC - Low	[illegible]	[illegible]

ZERO & SPAN DRIFT: (Accuracy ±3% of span)

Run # [illegible]	Time: [illegible]	
Gas Type	Initial Response	Final Response
HC - Zero	[illegible]	[illegible]
HC -	[illegible]	[illegible]

Run #	Time:	
Gas Type	Initial Response	Final Response
HC- Zero		
HC -		

Run # 2	Time: [illegible]	
Gas Type	Initial Response	Final Response
HC - Zero	[illegible]	[illegible]
HC -	[illegible]	[illegible]

Run #	Time:	
Gas Type	Initial Response	Final Response
HC- Zero		
HC -		

Run # 3	Time: [illegible]	
Gas Type	Initial Response	Final Response
HC - Zero	[illegible]	[illegible]
HC -	[illegible]	[illegible]

Run #	Time:	
Gas Type	Initial Response	Final Response
HC- Zero		
HC -		

INSTRUMENTAL ANALYSIS CALIBRATION DATA

DILUENT O_2 AND CO_2 MONITORS

Plant [illegible] Location [illegible]

Date 10-16-91 Operator [illegible]

Initial Calibration (Accuracy: ± 2% Span)

O_2			CO_2		
Gas Type	Actual Concentration	Analyzer Response	Gas Type	Actual Concentration	Analyzer Response
O_2-Zero	0	0.0	CO_2-Zero	0	0.0
O_2-High	20.9	20.9	CO_2-High	12.4	12.4
O_2-Mid	14.3	14.0	CO_2-Mid	10.4	9.5

System Bias Reponse: Analyzer Response-Initial Bias = ± 5% Span
Final Bias - Initial Bias = ± 3% Span

Run # 1 Time: 11:14-12:44 91

Gas Type	Initial Bias Response		Final Bias Response		Drift
Zero	0.0	0.0	-0.1	-0.1	
CO_2/O_2	9.5	10.0	9.4	10.0	

Run # 2 Time: 13:54-14:54

Gas Type	Initial Bias Response		Final Bias Response		Drift
Zero	-0.1	-0.1	-0.2	-0.1	
CO_2/O_2	9.4	10.0	9.4	10.1	

Run # 3 Time: 16:05-17:05 25

Gas Type	Initial Bias Response		Final Bias Response		Drift
Zero	-.2	-.1	-.1	0	
CO_2/O_2	9.4	10.1	9.4	10.1	

Run # Time:

Gas Type	Initial Bias Response		Final Bias Response		Drift
Zero					
CO_2/O_2					

D. CALIBRATION

B. PARTICULATE

POSTTEST DRY GAS METER CALIBRATION DATA FORM (English units)

Test number _____ Date 10-30-91 Meter box number C-124 Plant _____

Barometric pressure, P_b = 29.72 in. Hg Dry gas meter number _____ Pretest Y _____

Orifice manometer setting, (ΔH), in. H_2O	Gas volume: Wet test meter (V_w), ft^3	Gas volume: Dry gas meter (V_d), ft^3	Temperature: Wet test meter (t_w), °F	Temperature: Dry gas meter: Inlet (t_{d_i}), °F	Temperature: Dry gas meter: Outlet (t_{d_o}), °F	Temperature: Dry gas meter: Average[a] (t_d), °F	Time (Θ), min	Vacuum setting, in. Hg	Y_i	$Y_i \frac{V_w P_b (t_d + 460)}{V_d (P_b + \frac{\Delta H}{13.6})(t_w + 460)}$
.5	10.5	240 / 251.5M	77	82 / 84	84 / 83	90.5	13.66		.954	2.062
1	10	325 / 335.0M	77	82 / 80	87 / 89	92	19.23		.984	2.04
2	10	334 / 343.0M	77	78 / 80	84 / 89	97	13.43		.982	2.031
									Y = .99	2.04

[a] If there is only one thermometer on the dry gas meter, record the temperature under t_d

where

V_w = Gas volume passing through the wet test meter, ft^3.

V_d = Gas volume passing through the dry gas meter, ft^3.

t_w = Temperature of the gas in the wet test meter, °F.

t_{d_i} = Temperature of the inlet gas of the dry gas meter, °F.

t_{d_o} = Temperature of the outlet gas of the dry gas meter, °F.

t_d = Average temperature of the gas in the dry gas meter, obtained by the average of t_{d_i} and t_{d_o}, °F.

ΔH = Pressure differential across orifice, in. H_2O.

Y_i = Ratio of accuracy of wet test meter to dry gas meter for each run.

Y = Average ratio of accuracy of wet test meter to dry gas meter for all three runs; tolerance = pretest Y ±0.05Y.

P_b = Barometric pressure, in. Hg.

Θ = Time of calibration run, min.

POSTTEST DRY GAS METER CALIBRATION DATA FORM (English units)

Test number _____ Date 10-13-91 Meter box number C-124 Plant _____

Barometric pressure, P_b = 30.12 in. Hg Dry gas meter number 644882 Pretest Y _____

Orifice manometer setting, (ΔH), in. H_2O	Gas volume: Wet test meter (V_w), ft^3	Gas volume: Dry gas meter (V_d), ft^3	Temperature: Wet test meter (t_w), °F	Temperature: Dry gas meter: Inlet (t_{d_i}), °F	Temperature: Dry gas meter: Outlet (t_{d_o}), °F	Temperature: Dry gas meter: Average[a] (t_d), °F	Time (θ), min	Vacuum setting, in. Hg	Y_i	Y_i $\frac{V_w P_b (t_d + 460)}{V_d (P_b + \frac{\Delta H}{13.6})(t_w + 460)}$
1.0	10	60.44 / 63.19	73	83 / 110	84 / 84	96.5	14:02	5	0.975	1.95
1.5	10	48.03 / 52.146	73	85 / 110	89 / 92	94.5	15:12	5	0.976	1.95
2.0	10	40.55 / 44.077	73	83 / 107	77 / 78	91	13:18	5	0.981	1.92
									Y = 0.977	1.94

[a] If there is only one thermometer on the dry gas meter, record the temperature under t_d

where

V_w = Gas volume passing through the wet test meter, ft^3.

V_d = Gas volume passing through the dry gas meter, ft^3.

t_w = Temperature of the gas in the wet test meter, °F.

t_{d_i} = Temperature of the inlet gas of the dry gas meter, °F.

t_{d_o} = Temperature of the outlet gas of the dry gas meter, °F.

t_d = Average temperature of the gas in the dry gas meter, obtained by the average of t_{d_i} and t_{d_o}, °F.

ΔH = Pressure differential across orifice, in. H_2O.

Y_i = Ratio of accuracy of wet test meter to dry gas meter for each run.

Y = Average ratio of accuracy of wet test meter to dry gas meter for all three runs; tolerance = pretest Y ±0.05Y.

P_b = Barometric pressure, in. Hg.

θ = Time of calibration run, min.

STACK TEMPERATURE SENSOR CALIBRATION DATA FORM

Date 5-13-90 Thermocouple number 54

Ambient temperature 22 °C Barometric pressure 29.88 in. Hg

Calibrator S Tuma Reference: mercury-in-glass ✓

other

Reference point number	Source[a] (specify)	Reference thermometer temperature, °C	Thermocouple potentiometer temperature, °C	Temperature difference,[b] %
A	Ice water	32 °F	32 °F	0 %
B	Boiling	212 °F	212 °F	0 %
C	Boiling oil	341 °F	379 °F	.00?
D	Ambient 10-16-91	45°F	45°F	0

[a]Type of calibration system used.

[b] $\left[\frac{(\text{ref temp, °C} + 273) - (\text{test therm temp, °C} + 273)}{\text{ref temp, °C} + 273}\right] 100 \leq 1.5\%.$

RAMCON

Lear Siegler Stack Sampler

Heating Probe Calibration

Probe No. 54 Probe Length 5'

Date of Calibration 5-7-89 Signature Sam Tonner

Name of Company to be tested

Notes: 3 ft. probe - 5 min. warmup
6 ft. probe - 15 min. warmup
10 ft. probe - 30 min. warmup
Calibration flow rate = .75 CFM

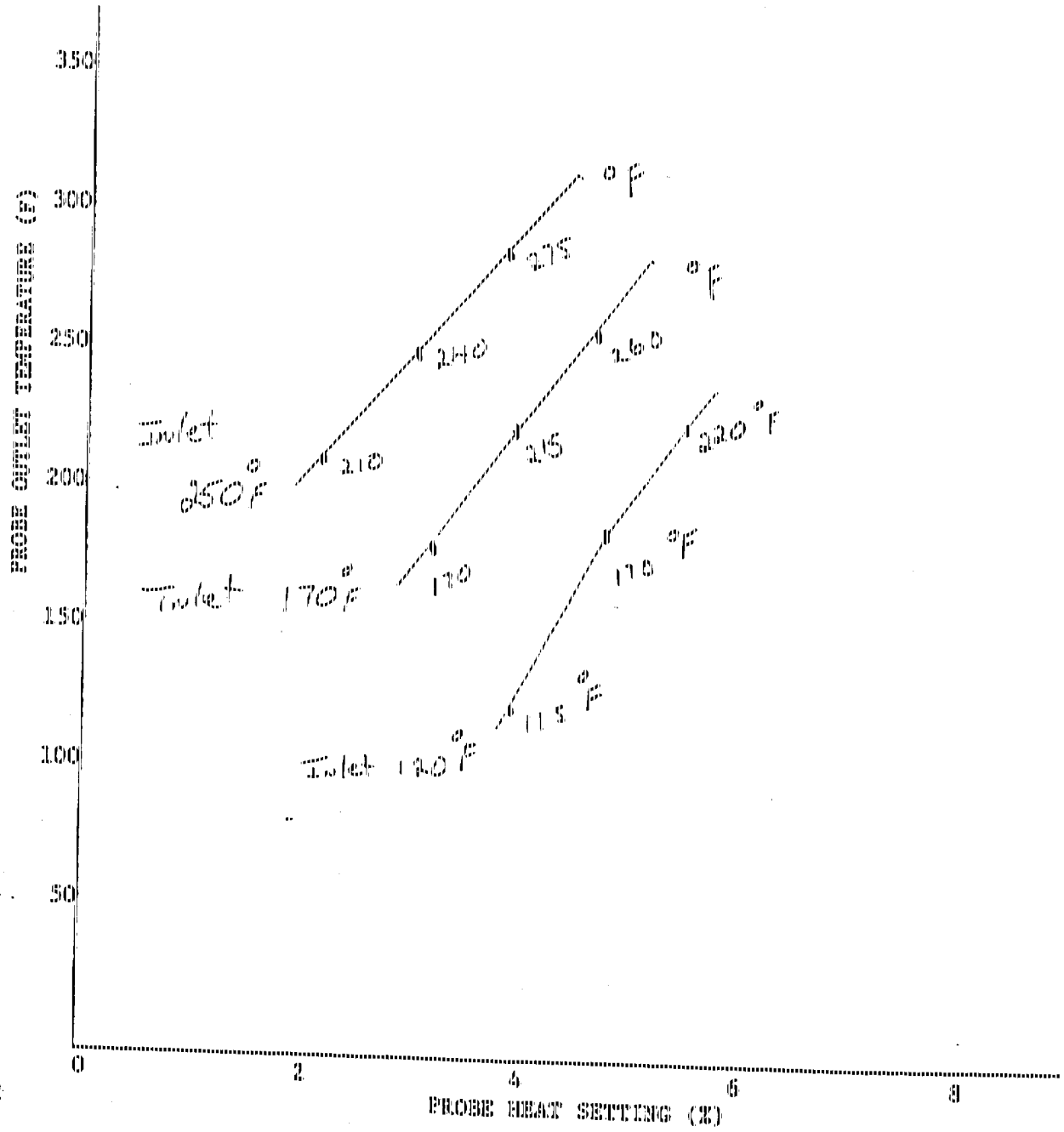

RAMCON ENVIRONMENTAL CORPORATION

Lear Siegler Stack Sampler

Nozzle Diameter Calibration

Date _____ Signature _____

Nozzle No.	Average Diameter	Nozzle No.	Average Diameter
1		7	
2		8	
3		9	
4		10	
5		11	
6		12	

Pitot Tube Calibration (S Type)

Pitot Tube Identification No. 2-4 Date 6-9-81

Calibrated by: [illegible]

"A" SIDE CALIBRATION

Run No.	Δp std cm H_2O (in. H_2O)	Δp (a) cm H_2O (in. H_2O)	C_p(a)	DEVIATION $C_p(a)-\bar{C}_p(A)$
1	2.2	3.1	.842	.006
2	1.8	2.5	.848	.000
3	1.1	1.5	.856	.008
		$\bar{C}_p$ (SIDE A)	.848	

"B" SIDE CALIBRATION

Run No.	Δp std cm H_2O (in. H_2O)	Δp(a) cm H_2O in. H_2O)	C_p(a)	DEVIATION $C_p(a)-\bar{C}_p(B)$
1	2.2	3.1	.842	.006
2	1.8	2.5	.848	.000
3	1.1	1.5	.856	.008
		$\bar{C}_p$ (SIDE B)	.848	

$$\text{AVERAGE DEVIATION} = \sigma(A \text{ OR } B) = \frac{\sum_{1}^{3} |C_p(a)-\bar{C}_p(A \text{ OR } B)|}{3} \leftarrow \text{MUST BE} \leq 0.01$$

$$|\bar{C}_p(\text{SIDE A})-\bar{C}_p(\text{SIDE B})| \leftarrow \text{MUST BE} \leq 0.01$$

$$C_p(a) = C_p(\text{std})\sqrt{\frac{\Delta p \text{ std}}{\Delta p_a}}$$

Form No. EED-17-1

STACK TEMPERATURE SENSOR CALIBRATION DATA FORM

Date 5-5-89 Thermocouple number [illegible]

Ambient temperature 80 °C Barometric pressure 29.88 in. Hg

Calibrator [illegible] Reference: mercury-in-glass ✓

other

Reference point number	Source[a] (specify)	Reference thermometer temperature, °C °F	Thermocouple potentiometer temperature, °C °F	Temperature difference,[b] %
A	Ice bath	32	32	0
B	oven	200	200	0
C	oven	350°F	350	0
D	Ambient 10-16-91	45°F	45°F	0

[a] Type of calibration system used.

[b] $\left[\frac{(\text{ref temp, °C} + 273) - (\text{test thermom temp, °C} + 273)}{\text{ref temp, °C} + 273}\right] 100 \leq 1.5\%.$

STACK TEMPERATURE SENSOR CALIBRATION DATA FORM

Date 5-5-89 Thermocouple number Hotbox

Ambient temperature 20 °C Barometric pressure 29.89 in. Hg

Calibrator Stuart Reference: mercury-in-glass ✓

other

Reference point number	Source[a] (specify)	Reference thermometer temperature, °C/°F	Thermocouple potentiometer temperature, °C/°F	Temperature difference,[b] %
A	ice bath	32	32	0
B	oven	200	200	0
C	oven	350	350	0
D	ambient 10-16-91	45°F	45°F	0

[a]Type of calibration system used.

[b] $\left[\frac{(\text{ref temp, °C} + 273) - (\text{test thermom temp, °C} + 273)}{\text{ref temp, °C} + 273}\right] 100 \leq 1.5\%$.

X. GAS CERTIFICATIONS

AIR PRODUCTS AND CHEMICALS, INC.
4022 Industry Lane
UBI Business Park
Research Triangle Park, NC 2771
TELEPHONE (919) 361-2077

DATE: 10/27/99
PAGE: 1

CERTIFICATE OF ANALYSIS

SANCON INC.
C/O RUSSELL LEMON
6401 S.15TH. ST.
OKLAHOMA CITY OK 73128

CUSTOMER ACCOUNT : 38148
CUSTOMER ORDER NO : 74515
ORDER NO : 351-021677
ORDER DETAIL SEQ : 1

ANALYSIS

CERTIFIED GAS MIXTURE	CONCENTRATION REQUESTED	ANALYTICAL RESULT	UNIT OF MEASURE
BATCH NO: 95C0QC SERIAL PROPANE	300	299	
ANAL DATE: 10/27/99			

CERTIFICATION

THIS ANALYSIS HAS BEEN PERFORMED UTILIZING APPROVED ANALYTICAL METHOD(S) AND IS CORRECT TO WITHIN THE ANALYTICAL ACCURACIES OF THIS (THESE) METHOD(S).

AUTHORIZED SIGNATURE

FORM 3000-3 REV. 0100

AIR PRODUCTS AND CHEMICALS, INC.
4822 Industry Lane
CDE Business Park
Research Triangle Park, NC 27713
TELEPHONE (919) 361-2077
FAX (919) 361-2074

(63)

DATE: 07/30/90
TIME: 09:09
PAGE: 1

CERTIFICATE OF ANALYSIS

AIR PRODUCTS AND CHEMICALS, INC.
2541 HARBOR AVENUE
MEMPHIS TN 38113

CUSTOMER ACCOUNT : 351
CUSTOMER ORDER NO : BARY
ORDER NO : 351-041596
ORDER DETAIL SEQ : 6

REMARKS : GAS MIXTURE(S) LISTED BELOW ARE TRACEABLE TO NIST CLASS G WEIGHTS AND/OR NIST GAS MIXTURE STANDARD REFERENCE MATERIALS (SRM's) - REFERENCE APCI 860 FIELD DIRECTIVE BOOK I PART A-3.

ANALYSIS

CERTIFIED GAS MIXTURE: PROPANE IN NITROGEN

	CYL NO	COMPONENT REQUESTED	CONCENTRATION REQUESTED	ANALYTICAL RESULT	UNIT OF MEASURE
BATCH NO: 00475	56207195	PROPANE	30	31.1	MOLAR PPM
ANAL DATE: 07/30/90		NITROGEN		BALANCE	

Rancon

CERTIFICATION

THIS ANALYSIS HAS BEEN PERFORMED UTILIZING APPROVED ANALYTICAL METHOD(S) AND IS CORRECT TO WITHIN THE ANALYTICAL ACCURACIES OF THIS (THESE) METHOD(S).

AUTHORIZED SIGNATURE

AIR PRODUCTS AND CHEMICALS, INC.
4822 Industry Lane
UDI Business Park
Research Triangle Park, NC 27713
TELEPHONE (919) 361-2077
FAX (919) 361-2074

(64)

DATE: 08/10/90
TIME: 14:56
PAGE: 1

CERTIFICATE OF ANALYSIS

AIR PRODUCTS AND CHEMICALS, INC.
2541 HARBOR AVENUE
MEMPHIS TN 38113

CUSTOMER ACCOUNT : 351
CUSTOMER ORDER NO : GARY
ORDER NO : 351-042745
ORDER DETAIL SEQ : 7

REMARKS : GAS MIXTURE(S) LISTED BELOW ARE TRACEABLE TO NIST CLASS S WEIGHTS AND/OR NIST GAS MIXTURE STANDARD REFERENCE MATERIALS (SRM'S) - REFERENCE APCI SOP FIELD DIRECTIVE BOOK I PART A-3.

ANALYSIS

CERTIFIED GAS MIXTURE: PROPANE IN NITROGEN

	CYL NO	COMPONENT REQUESTED	CONCENTRATION REQUESTED	ANALYTICAL RESULT	UNIT OF MEASURE
BATCH NO: 00692 ANAL DATE: 08/10/90	5638342	PROPANE NITROGEN	85	85.6 BALANCE	MOLAR PPM

RAMCON

CERTIFICATION

THIS ANALYSIS HAS BEEN PERFORMED UTILIZING APPROVED ANALYTICAL METHOD(S) AND IS CORRECT TO WITHIN THE ANALYTICAL ACCURACIES OF THIS (THESE) METHOD(S).

AUTHORIZED SIGNATURE

0000-3000-0000.000

AIR PRODUCTS AND CHEMICALS, INC.
4822 Industry Lane
UDI Business Park
Research Triangle Park, NC 27713
TELEPHONE (919) 541-2077

(65)

DATE: 11/01/89
PAGE: 1

CERTIFICATE OF ANALYSIS

AIR PRODUCTS AND CHEMICALS, INC.
2541 HARBOR AVENUE
MEMPHIS TN 38113

CUSTOMER ACCOUNT : 351
CUSTOMER ORDER NO :
ORDER NO : 351-021752
ORDER DETAIL SEQ : 5

** ANALYSIS **

CERTIFIED GAS MIXTURE: PROPANE IN NITROGEN

	CYL. NO	COMPONENT REQUESTED	CONCENTRATION REQUESTED	ANALYTICAL RESULT	UNIT OF MEASURE
BATCH NO: 0240BC ANAL DATE: 10/30/89	5891598	PROPANE	500	490	MOLAR PPM

VERIFICATION

THIS ANALYSIS HAS BEEN PERFORMED UTILIZING APPROVED ANALYTICAL METHODOLOGY AND IS CORRECT TO WITHIN THE ANALYTICAL ACCURACIES OF THIS STATED METHODOLOGY.

AUTHORIZED SIGNATURE

AIR PRODUCTS AND CHEMICALS, INC.
4622 Industry Lane
LOT Business Park
Research Triangle Park, NC 27713
TELEPHONE (919) 361-2077
FAX (919) 361-2074

DATE: 12/21/90
TIME: 09:41
PAGE: 1

CERTIFICATE OF ANALYSIS

AIR PRODUCTS AND CHEMICALS, INC.
2541 HARBOR AVENUE
MEMPHIS TN 38113

CUSTOMER ACCOUNT : 351
CUSTOMER ORDER NO : GARY
ORDER NO : 351-0536498
ORDER DETAIL SEQ : 3

REMARKS : GAS MIXTURE(S) LISTED BELOW ARE TRACEABLE TO NIST CLASS S WEIGHTS AND/OR NIST GAS MIXTURE STANDARD REFERENCE MATERIALS (SRM'S) - REFERENCE APCI SOP FIELD DIRECTIVE BOOK I PART A-3.

ANALYSIS

CERTIFIED GAS MIXTURE: PROPANE IN NITROGEN

	CYL NO	COMPONENT REQUESTED	CONCENTRATION REQUESTED	ANALYTICAL RESULT	UNIT OF MEASURE
BATCH NO: 02015 ANAL DATE: 12/21/90	S6641631	PROPANE	250	257.	MOLAR PPM
		NITROGEN		BALANCE	

Ranges

CERTIFICATION

THIS ANALYSIS HAS BEEN PERFORMED UTILIZING APPROVED ANALYTICAL METHOD(S) AND IS CORRECT TO WITHIN THE ANALYTICAL ACCURACIES OF THIS (THESE) METHOD(S).

AUTHORIZED SIGNATURE

XI. RAMCON PERSONNEL

Name: Mr. Joe Sewell
Title: Instrumentation Director

Qualifications:

Mr. Sewell is the director of our instrumental analysis branch of air emissions testing. He is a graduate of Christian Brothers University in Memphis, Tennessee where he obtained a bachelor of science degree in Chemical Engineering. He has personally conducted and supervised air emissions testing of boilers, incinerators, refineries, etc. utilizing state of the art continuous instrumentation and gas chromatography. He is learned in all US EPA methods with expertise in instrumental techniques for conducting compliance tests and Performance Specifications for CEMS certifications.

Project Duties:

Mr. Sewell provided project leadership for all test procedures conducted at the facility. He is the Quality Assurance/Quality Control Coordinator and will provided guidance in QA/QC to each team leader with regard to individual responsibilities on site for all testing procedures. He acted as a secondary contact person for RAMCON Environmental Corporation.

Name: Mr. Ken Allmendinger
Title: Field Supervisor

Qualifications:

Mr. Allmendinger is currently our Field Supervisor. He provides leadership to other Team Leaders when projects require multiple teams on site as well as coordinating with plant personnel. He has been employed with RAMCON Environmental Corporation for over six years. During that time he has personally conducted over 500 air emission tests. He has extensive training in conducting both isokinetic and instrumental US EPA Reference Methods. He has a current V.E. certification to conduct Method 9 for opacity. He has attended several equipment manufacturers schools for further knowledge of the processes he is testing.

Project Duties:

Mr. Allmendinger provided project leadership at the facility. He provided on-site organization for each Team Leader as to his crews responsibilities as well as providing coordination of testing time periods with the plant personnel.

Name: Mr. Bill Lockett
Title: Team Leader

Qualifications:

Mr. Lockett has been employed by RAMCON Environmental Corp. for three years. He has recently completed Team Leader training in isokinetic and proportional test methods. He currently is certified in conducting Method 9 for opacity. He has been involved in conducting tests on process stacks, incinerators, boilers, etc. He has served as a Field Technician for over two years, however he has recently been upgraded to Team Leader.

Project Duties:

Mr. Lockett is responsible for conducting isokinetic sampling procedures at the facility(s). He is responsible for preparation, calibration and cleaning of the necessary equipment for this testing. His duties on-site include assembling the sample train, leak checking the system, operation of the train and recording the test data on the field data forms.

Name: Mr. Tim Huey
Title: Laboratory Technician

Qualifications:

Mr. Huey is currently serving as Laboratory Technician. He is proficient in conducting many analysis procedures such as front and back-half particulate analysis, titrations, extractions, etc. He received an associate degree in Chemical Engineering from State Technical Institute in Memphis.

Project Duties:

Mr. Huey conducts the laboratory analysis on the particulate samples. He is also responsible for accepting the remaining field samples from the Field Sample Bank Manager and performing inspection as to integrity. He documents the transfer on the chain of custody forms and distributed the subcontracted samples to the respective laboratories.