Note: This is a reference cited in *AP 42, Compilation of Air Pollutant Emission Factors, Volume I Stationary Point and Area Sources.* AP42 is located on the EPA web site at www.epa.gov/ttn/chief/ap42/

The file name refers to the reference number, the AP42 chapter and section. The file name "ref02_c01s02.pdf" would mean the reference is from AP42 chapter 1 section 2. The reference may be from a previous version of the section and no longer cited. The primary source should always be checked.

Commonwealth of Pennsylvania
Environmental Resources
July 15, 1987

Subject: Source Test Review

To: Data File
I. A. Construction Corporation
Bradford Township, Clearfield County

From: John M. Mitchell
Air Pollution Control Engineer
Division of Technical Services and Monitoring
Bureau of Air Quality Control

Through: Chief, Source Testing and Monitoring Section

On May 29, 1987, RAMCON Environmental Corporation conducted three particulate tests at I. A. Construction Corporation's facility located in Bradford Township, Clearfield County. The source tested was a drum mix asphalt plant manufactured by Astec. The source is subject to NSPS requirements as well as all applicable rules and regulations of the Department of Environmental Resources.

The Astec drum mix asphalt plant is used to manufacture hot mix asphalt for road pavement. The following is a brief description of the process: The cold aggregate is dumped into four separate bins. Each bin contains a known grade of stone. The stone is dispensed onto a conveyor in amounts specific to the desired mix. A SRL-G top mix was manufactured during the emission testing. The stone aggregate mix is then passed from the common conveyor onto an inclined conveyor, where it is fed into the rotary drum mixer. In the mixer, the aggregate is continuously dried and mixed. The required amount of hot asphalt oil is then injected into the mixer. The hot oil and dried aggregate are mixed by the rotary motion of the mixer. The hot asphalt mix is then conveyed from a mixer to a storage silo to await shipment to its final destination. The rotary drum mixer is fired by a propane burner that heats air which is drawn through the mixer by an exhaust fan. After passing through the mixer, the heated air is drawn through a baghouse manufactured by Astec. The particulate captured by the baghouse is recycled back into the mixer.

The testing was conducted in accordance with Chapter 139 of Department of Environmental Resources' Rules and Regulations and is acceptable to the Department.

The following information was extracted from the reports:

	Run 1	Run 2	Run 3
Plant Design Capacity, ton/hr	325	325	325
Actual operating rate, ton/hr	300	300	300
Volumetric Flow Rate, DSCFM	19,769	22,254	22,446
Particulate Concentration, grains/DSCF	0.0060	0.0049	0.0051
Allowable Particulate Concentration, grains/DSCF	0.04	0.04	0.04
Particulate Emission Rate, lbs/hr	1.0	0.93	1.0

COMMONWEALTH OF PENNSYLVANIA

June 22, 1987

SUBJECT: Stack Test Report
IA Construction Corp.
Bradford Township, Clearfield County
File 17-303-002

TO: L. Blaine DeHaven, Chief
Source Testing & Monitoring Section
Division of Technical Services & Monitoring

THROUGH: Richard L. Maxwell, Jr.
Chief, Engineering Services
Williamsport Regional Office

FROM: David Alan Bish
Air Pollution Control Engineer III
Williamsport Regional Office

Please find attached a copy of the sampling results submitted by Ramcon Environmental Corporation regarding the tests conducted at the IA Construction Corporation's new Astec PDM-845-F hot mix asphalt plant on May 29, 1987.

This source is subject to Subpart I of the Federal Standards of Performance for New Stationary Sources (Standards of Peformance for Hot Mix Asphalt Facilities) which mandates a particulate matter emission of .04 grains/DSCF and less than 20% opacity.

Please review the attached report and advise me as to its acceptability.

I have also enclosed a copy of my June 2 memo documenting the observation of the testing.

If you need any additional information, please call me at network 465-3642.

DAB:lm

Attachments

RECEIVED
JUN 24 1987
BUR. AIR QUALITY CONTROL
DIV. OF ABATEMENT & COMPLIANCE

COMMONWEALTH OF PENNSYLVANIA

June 2, 1987

SUBJECT: I. A. Construction Corporation
Bradford Township, Clearfield County
File 17-303-002

TO: Richard L. Maxwell, Jr.
Chief, Engineering Services
Williamsport Regional Office

THROUGH: John E. Archambault
Williamsport District Supervisor
Williamsport District Office

FROM: David Alan Bish
Air Pollution Control Engineer III
Williamsport Regional Office

On May 29, 1987, Jeanrine Kubli and I observed a stack test conducted on the Astec PBM-845-F drum mix asphalt concrete plant at I.A.'s Bradford Township site. The stack tests were conducted by Ramcon Environmental Corporation (223 Scott Street, Memphis, TN 38112, telephone 901/458-7000). Mr. J. Cameron Mitchell and Mr. John Bowden conducted the tests.

We arrived on site at 7:10 a.m. We contacted Sam Rocco, the plant operator. The plant was running at that time at 300 tons/hr. They were running top mix and Mr. Rocco said they will be running top mix all day. I asked Sam if he could have someone get a sample of the aggregate and have a screening test done on it down to 200 mesh. Sam said they just took an aggregate sample at 7 a.m. The general plant layout is shown on the attached sketch.

After talking with Mr. Rocco, we contacted Mr. Mitchell to observe the testing. The exhaust stack is a rectangular 33" x 49" with six ports running down the longer side. The stack and ports are arranged so that testing could be done simply by standing on the baghouse roof adjacent to the stack so that no scaffolding was required. Mr. Mitchell said he planned to sample four points in each of the six ports. Although DER required a minimum sample time of 3 minutes per point, Mr. Mitchell said for the first test he planned to run 3.5 minutes per point to assure that they got enough sample volume (50 cu. ft. minimum).

The sampling train consisted of a standard filter, two impingers each containing 100 ml of water, a dry impinger and one filled with silica gel. Before the first test, Mr. Mitchell checked the probe opening with a micrometer (.22 inches) and adjusted all the magnehelics on his control panel to zero.

JUN 2 4 1987
DER-AIR QUALITY CONTROL
DIV. OF ABATEMENT & COMPLIANCE

The plant had been running when we arrived but it had stopped. The baghouse fan came on at 7:48:17 a.m., and the rotary drum dryer began rotating at 7:49:52 a.m. Although the stack testing was originally projected to begin at 6 a.m., testing did not begin until 8:23:40 a.m. The stack temperature at that time was 273°F. The meter temperature in and out at 8:27 a.m. was 92° and 76°F respectively.

During the first test, I located myself at a distance south of the plant so that I could observe the subject facility with trees as the background. There was no opacity from the exhaust stack. I observed this stack periodically through the first and second tests, and at no time were there any visible emissions.

The hot asphalt mix is conveyed from the dryer/coater up to a small surge bin on top of the conveyor. This unit would dump, via a clam shell-type dump mechanism, every 20-30 seconds into a larger open-topped surge bin directly below it from which the trucks were loaded. For 15 seconds after the smaller bin dumped into the large bin, there was a 15% opacity of what appeared to be condensed hydrocarbon particulate from the top of the unit. Although noteworthy, I did not see it as being significant enough to be considered a problem.

There are four aggregate hoppers feeding the rotary drum dryer. The ones closer to the rotary drum contain the finer aggregate. Since they were running top mix, the first two hoppers containing the finest aggregate were the ones being loaded the most. There was an appreciable spurt of dust from each front end loader dump into the hopper.

I. A. does have a water truck, but it appeared to be used only slightly. Road dust was not much of a problem, however, simply due to the fact that all the truck traffic moved exceptionally slow.

The plant capacity is 325 tons/hr at 5% aggregate moisture. The plant was operating at 320 tons/hr at 9:40 a.m., and Mr. Rocco said they would maintain this level all day. The baghouse pressure differential was running at a steady 3.5 inches water gauge and the bag cleaning pulses were set at 15-second intervals.

The filter box temperature is checked and adjusted periodically through the tests. Mr. Mitchell indicated that it's somewhat difficult to control at times. The filter box temperature had been held around 250°F during the test. I noted, however, looking at the thermometer actually on the filter box, the temperature had risen to 300°F at 9:56 a.m. The stack temperature was 278°F at the time. Adjustments were made to bring the temperature back down.

The first test gas volume sample was 50.77 cu. ft. I had somehow missed the initial leak check, although Mr. Mitchell assured me he had done it. The final leak check, however, was not adequate. The initial value I observed was .08 cfm. By trying to seal the end better, they got it down to .055 cfm but could not even approach the required .02 cfm.

Mr. Mitchell wanted to know if he could apply the correction calculations referenced in Section 6.3 40 CFR Chapter 1 to correct the air volume rather than consider the test invalid. However, using the .08 cfm figure, the corrected air volume would be 45.64 cu. ft, which is below the required 50 cu. ft. minimum. I spoke with Blaine DeHaven to discuss the above. Blaine said they could apply the correction factor and we could let them slide on the low air volume if the final leak check was done under a vacuum at least as high as the highest vacuum pulled during the test. This was confirmed with Mr. Mitchell. The final leak check was done pulling 8" Hg. During the test, the vacuum ranged from 2-8" Hg.

Mr. Mitchell asked, and I confirmed, that we require them to report the material collected in the back half of the sampling train. I watched Mr. Mitchell clean the sampling train. The first two impingers were washed (with acetone) into a clean mason jar. The probe and probe line were washed into a separate clean mason jar. The filter showed almost no perceptible dust or discoloration. The filter was removed from the filter holder and placed in a plastic container.

The initial leak check prior to test #2 showed a leak which was tracked down to the point where the probe connects to the glass filter container. The initial leak check was then done at 15" Hg and was less than the .02 cfm required. The second test was started 11:16 a.m. The filter box temperature ranged from 250-270°F during the test. The second test ended at 12:51 p.m. This time the sample volume was 57 cu.ft. The highest vacuum during the test was 9" Hg. The final leak check was done at 10" Hg and was .012 cfm.

During the second test, plant personnel began periodic unloading of the fines silo into a dump truck located adjacent to the silo. This operation produced an obnoxious amount of fugitive emissions which as luck would have it, drifted directly into the area where the sampling equipment and truck were parked. Because of this dust problem, Mr. Mitchell requested that he be allowed to clean the sampling train out later. He did, however, clean out the sampling nozzle and probe into a clean mason jar. I examined the probe following the cleaning, and it was clean. The sampling train was sealed with teflon tape for later cleaning. Mr. Mitchell said if acceptable, he would simply seal the probe and train from the third test and clean it up later. Under the circumstances, this seemed to be the preferred course of action.

I discussed the fines loadout problem with Roger Apel. Normally, they put the fines back in the mix. They can't return them all when they are making top mix and, therefore, some needed to be wasted. He said the current setup is temporary, and they will be installing a double-tube type loading device where the dust discharges through the center tube and there is vacuum in the line surrounding the inner tube which picks up any dusting The operation as conducted on the 29th was unacceptable and I recommend it be remedied before a permit is issued for this facility.

The plant inadvertently ran out of asphalt at 1:15 p.m. This delayed the start of the third test. He left the site at 1:50 p.m. It was projected that the third test would start sometime around 2:30 p.m.

DAB:lm

Aggregate Bins
Propane Tank
Road Deck Area
Asphalt Tank
Baghouse
Fines Storage Bin
Control Room

RAMCON ENVIRONMENTAL CORPORATION

RAMCON BUILDING 229 SCOTT STREET MEMPHIS, TENNESSEE 38112 TELEPHONE 901 / 458-7000 800 / 458-4567

RECEIVED
JUN 19 1987
DER-AIR QUALITY CONTROL
WILLIAMSPORT REGION

SOURCE SAMPLING
for
PARTICULATE EMISSIONS
I.A. CONSTRUCTION CORPORATION
BIGLER, PENNSYLVANIA
May 29, 1987

Roger Apel
I.A. Construction Corp.

G. Sumner Buck, III
President

J. Cameron Mitchell
Team Leader

RAMCON ENVIRONMENTAL CORPORATION

RAMCON BUILDING 229 SCOTT STREET MEMPHIS, TENNESSEE 38112 TELEPHONE 901/458-7000 800/458-0567

June 4, 1987

RECEIVED
JUN 19 1987
DER-AIR QUALITY CONTROL
WILLIAMSPORT REGION

Mr. Roger Apel
I.A. Construction Corporation
P.O. Box 38
Indiana, PA 15701

Re: Particulate Emissions Test - Bigler, Pennsylvania

Dear Mr. Apel:

Enclosed are four copies of our report on the particulate emissions test we conducted at your plant. Based on our test results, your plant does pass both EPA New Source Performance Standards and those set by the State of Pennsylvania. The average grain loading of the three test runs was in compliance with Federal and State Standards.

You will want to sign the report covers and send two copies to:

Mr. David Bish
Department of Environmental Resources
P.O. Box 2063
Harrisburg, PA 17120

We certainly have enjoyed working with you and look forward to serving you again in the future.

Sincerely,

G. Sumner Buck, III
President

GSBIII:kr

Enclosures

TABLE OF CONTENTS

I.	INTRODUCTION	1
II.	TEST RESULTS	1
III.	TEST PROCEDURES	2
IV.	THE SOURCE	4
V.	EQUIPMENT USED	10
VI.	LABORATORY PROCEDURES & RESULTS	11
VII.	CALCULATIONS	16
VIII.	FIELD DATA	26
IX.	CALIBRATIONS	32
X.	RAMCON PERSONNEL	39

RECEIVED
JUN 19 1987
BUR. AIR QUALITY CONTROL
WILLIAMSPORT REGION

I. INTRODUCTION

On May 29, 1987, personnel from RAMCON Environmental Corporation (REC) conducted a source emissions test for particulate emissions compliance at I.A. Corporation's Astec drum mix asphalt plant located in Bigler, Pennsylvania. RAMCON personnel conducting the test were Cameron Mitchell, Team Leader and John Bowden. Kim Rea was responsible for the final particulate laboratory analysis including taring the beakers and filters and recording final data in the laboratory record books. Custody of the samples was limited to Mr. Mitchell and Ms. Rea.

The purpose of the test was to determine if the rate of particulate emissions from the plant's baghouse and the total contaminants by weight (grain loading) are below the limits set by EPA and the State of Pennsylvania.

II. TEST RESULTS

Table I summarizes the test results. The grain loading limitation for EPA is .04 gr/DSCF and is specified in 39 FR 9314, March 8, 1974, 60.92 Standards for Particulate Matter (1), as amended. The allowable emissions for the State of Pennsylvania is the same as those set by EPA.

Mr. David Bish and Ms. Jeannine Kubli of Pennsylvania's Department of Environmental Resources observed the testing conducted by RAMCON.

TABLE I

SUMMARY OF TEST RESULTS
May 29, 1987

Test Run	Time	Grain Loading	Isokinetic Variation	Actual Emissions
1	08:24 to 10:00	0.0060 gr/DSCF	90%	1.0 lbs/hr
2	11:16 to 12:52	0.0049 gr/DSCF	97%	0.9 lbs/hr
3	14:18 to 14:18	0.0051 gr/DSCF	92%	1.0 lbs/hr
	Average:	0.0053 gr/DSCF		1.0 lbs/hr

On the basis of these test results, the average grain loading of the three test runs was below the .04 gr/DSCF emissions limitation set by US EPA and the State of Pennsylvania. Therefore, the plant is operating in compliance with State and Federal Standards.

III. TEST PROCEDURES

A. Method Used: The source sampling was conducted in accordance with Method 5 requirements of the U.S. Environmental Protection Agency as set forth in 39 FR 9314, March 8, 1974, 60.93, as amended.

B. Problems Encountered: At the end of run one, the tester established a leak rate of 0.08 ft^3/min. The sample gas volume was corrected according to Method 5, paragraph 6.3. After the gas volume was corrected, it dropped below the 50 ft3/min. requirement established by the State of Pennsylvania. The observer agreed to accept this run.

C. Sampling Site: The emissions test was conducted after a baghouse on a rectangular stack measuring 45" x 30" with an equivalent diameter of 36". Six sampling ports were placed 19" down (0.53 diameters upstream) from the top of the stack and 73" up (2.0 diameters downstream) from the last flow disturbance. Twenty four points were sampled, four through each port for 3.5 minutes each.

Points on a Diameter	Probe Mark
1	*9.75"
2	17.25"
3	24.75"
4	32.25"

*Measurements include a 6" standoff.

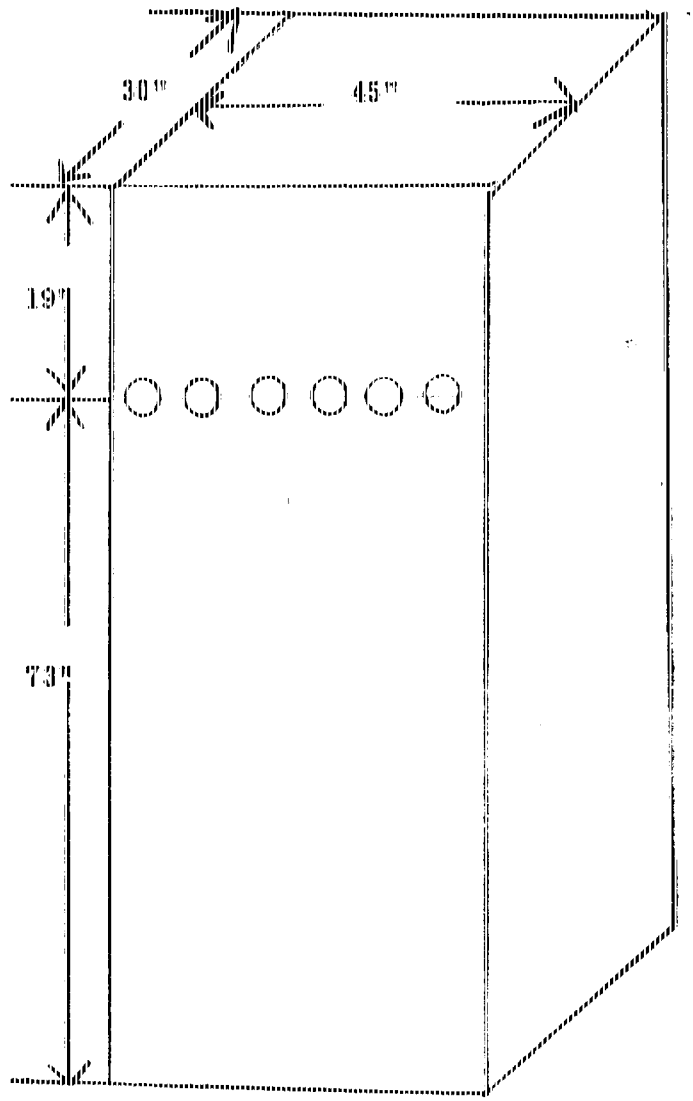

IV. THE SOURCE

IV. THE SOURCE

I.A. Construction Corporation employs an Astec drum mix asphalt plant which is used to manufacture hot mix asphalt for road pavement. The process consists of blending prescribed portions of cold feed materials (sand, gravel, screenings, chips, etc.) uniformly and adding sufficient hot asphalt oil to bind the mixture together. After the hot asphalt mix is manufactured at the plant, it is transported to the location where it is to be applied. The hot asphalt mix is spread evenly over the surface with a paver and then compacted with a heavy roller to produce the final product.

The following is a general description of the plant's manufacturing process: The cold feed materials (aggregate) are dumped into four separate bins which in turn feed a common continuous conveyor. The aggregate is dispensed from the bins in accordance with the desired formulation onto the cold feed system conveyor to an inclined weigh conveyor then to a rotating drum for continuous mixing and drying at approximately 300°F. The required amount of hot asphalt oil is then injected onto and mixed into the dried aggregate. The now newly formed hot asphalt mix is pulled to the top of a storage silo by conveyor. The hot asphalt mix is then discharged from the storage silo through a slide gate into waiting dump trucks, which transport the material to a final destination for spreading. The rated capacity of the plant will vary with each aggregate mix and moisture content with a 5% surface moisture removal.

The drum mixer uses a burner fired with propane to heat air to dry the aggregate, and the motion of the rotating drum to blend the aggregate and hot asphalt oil thoroughly. The air is drawn into the system via an exhaust fan. After passing through the burner and the mixing drum, the air passes through a baghouse. The baghouse is manufactured by Astec. The exhaust gasses are drawn through the baghouse and discharged to the atmosphere through the stack. The design pressure drop across the tube-sheet is 1 - 6 inches of water. The particulate matter, which is removed by the baghouse, is reinjected into the drum mixer.

1. Aggregate bins: Virgin aggregate is fed individually into each of four bins by type. It is metered onto a conveyor belt running under the bins to a shaker screen. The proporation of each aggregate type is determined by the job mix formula and pre-set to be metered out to meet these specifications.

2. Preliminary oversize screen: The aggregate is fed through a shaker screen where oversize rocks and foreign material is screened out of the mix.

3. Weigh conveyor belt: The aggregate is conveyed to the rotary drum dryer on a conveyor belt which weighs the material. The production rate is determined by this weight reading.

4. Rotary drum dryer/mixer: The aggregate is fed into the rotary drum dryer where it is tumbled by flighting into a veil in front of a flame which drives off the moisture. Further mixing is also accomplished in this drum. Hot liquid asphalt is injected approximately one-third of the way down the inclined drum where it is mixed with the aggregate.

5. Burner: The fuel fired burner is used to provide the flame which drys the aggregate.

6. Knock off baffleing: A baffeling plate is inserted in the "dirty" side plenum as a knock out for heavy particles in the air stream. These particles fall to the bottom of the baghouse.

7. Baghouse: The hot gases are pulled through the bags into the clean air plenum. The solid particulate matter is trapped on the dust coat buildup on the bags. A bag cleaning cycle consisting of jet burst of air from the inside (or clean air side) of the bags sends a large bubble of air down the inside of the bags shaking loose buildup on the bag surface. This particulate matter is collected at the bottom of the baghouse and reinjected into the drum mixer where it is used as part of the finished project.

8. Liquid asphalt storage: The liquid asphalt is stored in this heated tank until it is needed in the mixer. The amount of asphalt content and its temperature are pre-set for each different type job.

9. Conveyor to surge/storage bin: The finished product of aggregate mixed with liquid asphalt is conveyed to a surge bin.

10. Surge/Storage bin: The asphaltic cement is dumped into this surge bin and metered out to dump trucks which pull underneath a slide gate at the bottom of the bin.

11. Control/operators house: The entire plant operation is controlled from this operator's house.

12. Truck loading scale: As the trucks receive the asphalt from the storage/surge bin they are weighed on the loading scale which tells the plant operator the amount of asphalt that is being trucked on each individual load.

13. Fuel Storage

14. Stack

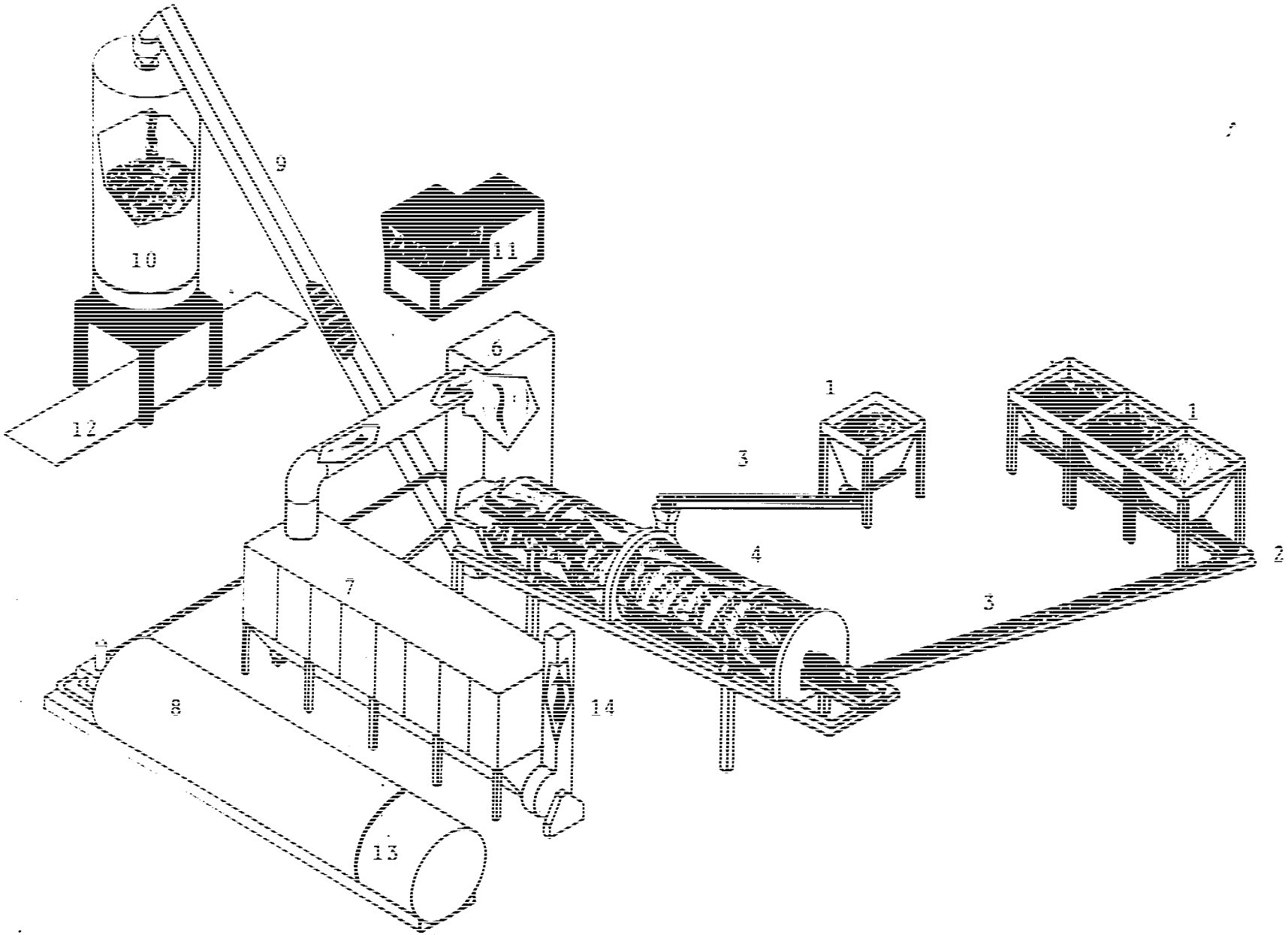

ASTEC - DRUM MIX BAGHOUSE

DATA SUMMARY

Plant

1. Manufacturer of plant I.A. Construction.
2. Designed maximum operating capacity 325 TPH @ 5 % moisture.
3. Actual operation rate 300 TPH @ 4.6 % moisture.
4. Startup date 5-20-87.
5. Type of fuel used in dryer Propane.
6. Quanity of fuel consumption 29,700 gal

Aggregate

7. Name/type of mix SAL-G.
8. Percent asphalt in mix 6.0 %.
9. Temperature of asphalt 300°.
10. Sieve/Screening analysis: % Passing:

1"		3/8"	97.4	#50	10.7
3/4"		#16	28.1	#100	8.0
1/2"	100.0	#30	16.7	#200	6.4

Baghouse

11. Manufacturer Astec.
12. No. of bags 896. Type of bags Nomex.
13. Air to cloth ratio 6:1. Designed ACFM 50,000.
14. Square feet of bags 8332.
15. Type of cleaning: pulse jet X, reverse air ____, plenum pulse ____, other ____.
16. Cleaning cycle time .15.
17. Interval between cleaning cycle 15 sec.
18. Pressure drop across baghouse 3" psi.
19. Pulse pressure on cleaning cycle 125 psi.

COMPANY NAME I.A. Construction Co. DATE 5/30/87

COMPANY REPRESENTATIVE [illegible]

TRUE 24HOUR	FOEL OIL NAT GAS PROPANE COAL GAL REQD	BOILER SETTING % OPEN	AIR TPH	GRID ASPIRATOR TPH	MIX TEMP	BOILER PRESSURE DROP INCHES WATER
8:30 START #1	2.96	47%	288	19.0	300°	3
8:45	2.96	46%	286	18.9	300°	3½
9:00	2.96	48%	285	18.9	300°	3½
9:15		44%	290	18.7	300°	3
9:30		45%	286	18.8	300°	3
9:45		46%	288	18.7	300°	3
10:00 END #1		48%	290	19.1	300°	3
10:15		45%	281	18.6	300°	3
10:30		42%	285	18.8	296°	3
10:45		43%	283	18.9	295°	3
11:00		47%	289	18.8	300°	3
11:15 START #2		42%	286	18.7	300°	3
11:30		46%	290	18.7	295°	3
11:45		45%	285	18.8	300°	3½
12:00		43%	284	18.6	300°	3
12:15		43%	287	18.7	302	3½
12:30		42%	290	18.8	300	3
12:45		45%	285	18.9	300	3
1:00 END #2		46%	282	18.8	300	3
1:15		47%	283	18.9	300	3
1:30		48%	289	18.6	300	3½
1:45		42%	290	18.7	300	3

Time	Pounds	Sensor (%)	TPH	Asphalt TPH	Temp	Press Psi
84400	641800					
2:00			Dead			Inches Coarse
2:15	5787443		Dead			
2:30	2.89	40%	281	18.7	300	2½
2:45		42%	286	18.5	305	3
3:00		43%	289	18.6	300	3
3:15		47%	285	18.4	295	3
3:30		49%	289	18.5	300	3
3:45		Dead				
4:00		Dead				
4:15		Dead				
4:30	6604 3		280	18.5	290	3
4:45		26%	238	15.5	298	2

Company name IA Construction Corp

Company rep. Rose Apel Date 5-29-87 Phone 814-392-2223

Data source Computer

Plant location Bicer, Pa.

Plant mfg. Astec Plant model 8' Dmc Plant type Drum Mix Cover

Mix specified 2D-2 Wearing Sec-4 Oil specified AC-20

V. EQUIPMENT USED

V. EQUIPMENT USED

Equipment used on conducting the particulate emissions test was:

A. The Lear Siegler PM-100 stack sampler with appropriate auxillary equipment and glassware. The train was set up according to the schematic on the nex page.

B. An Airguide Instruments Model 211-B (uncorrected) aneroid barometer was used to check the barometric pressure.

C. Weston dial thermometers are used to check meter temperatures. An Analogic Model 2572 Digital Thermocouple is used for stack temperatures.

D. A Hays 621 Analyzer was used to measure the oxygen, carbon dioxide and carbon monoxide content of the stack gases. For non-combustion sources, A Bacharach Instrument Company Fyrite is used for the gas analysis.

E. Filters are mady by Schleicher and Schuell and are type 1-HV with a porosity of .03 microns.

F. The acetone is reagent grade or ACS grade with a residue of ≤ .001.

VI. LABORATORY PROCEDURES & RESULTS

LABORATORY PROCEDURES FOR PARTICULATE SAMPLING

RECEIVED
JUN 19 1997
DER-AIR QUALITY CONTROL
WILLIAMSPORT REGION

I. Field Preparation

A. FILTERS: Fiberglass 4" sampling filters are prepared as follows:

Filters are removed from their box and numbered on the back side with a felt pen. The numbering system is continuous from job to job. The filters are placed in a dessicator to dry for at least 24 hours. Clean plastic petri dishes, also numbered, top and bottom, are placed in the dessicator with the filters. After dessication, the filters are removed one at a time and weighed on the Sartorius analytical balance, then placed in the correspondingly numbered petri dish. Weights are then recorded in the lab record book. Three filters are used for each complete particulate source emissions test and there should be several extra filters included as spares.

B. SILICA GEL: Silica Gel used for the test is prepared as follows:

Approximately 200 g of silica gel is placed in a wide mouth "Mason" type jar and dried in an oven (175°C for two hours). The open jars are removed and placed in a dessicator until cool (2 hours) and then tightly sealed. The jars are then numbered and weighed on the triple beam balance to the closest tenth of a gram, and this weight is recorded for each sealed jar. The number of silica gel jars used is the same as the number of filters. Silica gel should be indicating type, 6-16 mesh.

II. Post-Testing Lab Analysis

A. FILTERS: The filters are returned to the lab in their sealed glass filter holder which was used in field sampling. In the lab these holders are opened. The filter is placed in its petri dish with the lid off and returned to the dessicator for at least 24 hours. The top half of the filter holder is washed into the corresponding probe wash bottle and the bottom half of the filter holder is washed into the corresponding impinger catch bottle. (See II, C and D). After dessication, the filters are reweighed. The final weight is recorded in the lab record book. The filter pick up weight is calculated and recorded also. This procedure is repeated for all filters used in the field.

Alternately, the test team may opt to oven dry the filters at 220°F for two to three hours, weigh the sample, and use this weight as a final weight.

B. SILICA GEL: The sealed silica gel jars should be reweighed on the triple-beam balance and their weights recorded as shown on previous page.

WEIGHING PROCEDURE - SARTORIUS ANALYTICAL BALANCE

The Sartorius balance is accurate to 0.1 mg and has a maximum capacity of 200 grams. The balance precision (standard deviation) is 0.05 mg. Before weighing an item, the balance should first be zeroed. This step should be taken before every series of weighings. To do this, the balance should have all weight adjustments at "zero" position. The beam arrest lever (on the lower left hand side toward the rear of the balance) is then slowly pressed downward to full release position. The lighted vernier scale on the front of the cabinet should align the "zero" with the mark on the cabinet. If it is not so aligned, the adjustment knob on the right hand side (near the rear of the cabinet) should be turned carefully until the marks align. Now return the beam arrest to horizontal arrest position. The balance is now "zeroed".

To weigh an item, it is first placed on the pan. And the sliding doors are closed to avoid air current disturbance. The weight adjustment knob on the right hand side must be at "zero". The beam arrest is then slowly turned upward. The lighted scale at the front of the cabinet will now indicate the weight of the item in grams. If the scale goes past the divided area, the item then exceeds 100 g weight (about 3-1/2 ounces) and it is necessary to arrest the balance (beam arrest lever) and move the lever for 100 g weight away from you. It is located on the left hand side of the cabinet near the front, and is the knob closest to the side of the cabinet. The balance will not weigh items greater than 200 grams in mass, and trying to do this might harm the balance. Remember --- this is a delicate precision instrument.

After the beam is arrested, in either weight range, the procedure is the same. When the weight of the item in grams is found, "dial in" that amount with the two knobs on the left hand side (near the 100 g lever) color coded yellow and green. As you dial the weight, the digits will appear on the front of the cabinet. When the proper amount is dialed, carefully move the arrest lever down with a slow, steady turn of the wrist. The lighted dial will appear, and the right hand side knob (front of cabinet) is turned to align the mark with the lower of the two lighted scale divisions which the mark appears between. When these marks are aligned, the two lighted digits along with the two indicated on the right hand window on the cabinet front are the fractional weight in grams (the decimal would appear before the lighted digits) and the whole number of grams weight is the amount "dialed in" on the left.

In general, be sure that the beam is in "arrest" position before placing weight on or taking weight off of the pan. Don't "dial in" weight unless the beam is arrested. The balance is sensitive to even a hand on the table near the balance, so be careful and painstaking in every movement while weighing.

C. PROBE RINSINGS: In all tests, a probe wash-out analysis will be necessary. These samples are returned in sealed Mason jars and consist of A.R. Acetone with an unknown solid content. Clean 250 ml beakers are used to make this analysis. These should be immaculately washed and rinsed with deionized water, then oven dried at 105°C for about one hour. The beakers should be moved to the dessicator to cool for ninety (90) minutes, then labeled with a pencil and weighed on the Sartorius analytical ballance. Any variance from this procedure should be duplicated exactly when reweighing, as this procedure has been found to be quite sensitive. After preparing the necessary number of beakers (one for each probe wash and one blank) the Mason jars should be opened, poured into the beaker, and any material remaining on the jar walls rinsed with an acetone wash bottle into the beaker. The amount of liquid in the beaker should be noted on the analysis form. The acetone rinsings are evaporated on a warming plate. The liquid is kept swirled with an air sweep to prevent "bumping". When the acetone is evaporated the beakers are weighed as in Section II A.

D. IMPINGER CATCH: In some testing cases, the liquid collected in the impingers must be analyzed for solids content. This involves a similar procedure to the probe wash solids determination, except that the liquid is deionized water.

E. ACETONE: Conduct a blank analysis of acetone in the 1 gallon glass container. This acetone will be used in the field for rinsing the probe, nozzle, and top half of the filter holder. Performing such a blank analysis prior to testing will insure that the quality of the acetone to be used will not exceed the .00196 residual purity standard.

SPECIAL NOTE

When sampling sources high in moisture content, (such as asphalt plants) the filter paper sometimes sticks to the filter holder. When removing the filter it may tear. In order to maintain control of any small pieces of filter paper which may be easily lost, they are washed with acetone into the probe washing. This makes the filter weight light (sometimes negative) and the probe wash correspondingly heavier. The net weight is the same and no particulate is lost. This laboratory procedure is taught by EPA in the Quality Assurance for Source Emissions Workshop at Research Triangle Park and is approved by EPA.

Form REC#8

SAMPLE ANALYTICAL DATA FORM

Plant Location T.A. Construction Relative humidity in lab 44 %

Sample Location [illegible] Density of Acetone (pa) .7853 mg/ml

Blank volume (V_a) 200 ml

Date/Time wt. blank 6-1-87 Gross wt. 98.9487 mg

Date/Time wt. blank 6-2-87 Gross wt. 98.9485 mg

Ave. Gross wt. 98.9486 mg

Tare wt. 98.9484 mg

Weight of blank (m_{ab}) .0002 mg

Acetone blank residue concentration (C_a) (C_a) = (M_{ab}) / (V_a) (P_a) = (.00003 mg/g)

Weight of residue in acetone wash: $W_a = C_a V_{aw} P_a$ = (.00003)(200)(.7853) = (.0002)

		Run # 1	Run # 2	Run # 3
Acetone rinse volume (V_{aw})	ml	200	200	200
Date/Time of wt 6-1-87	Gross wt g	145.7687	140.3455	164.4396
Date/Time of wt 6-2-87	Gross wt g	145.7684	140.3451	164.4395
	Average Gross wt g	145.7686	140.3453	164.4396
	Tare wt g	145.7549	140.3317	164.4260
	Less acetone blank wt (W_a) g	.0002	.0002	.0002
Wt of particulate in acetone rinse (m_a)	g	.0135	.0134	.0134

Filter Numbers	#	SG-1830	SG-1832	SG-1839
Date/Time of wt 6-1-87	Gross wt g	.5202	.5176	.5208
Date/Time of wt 6-2-87	Gross wt g	.5197	.5176	.5206
	Average Gross wt g	.5199	.5176	.5207
	Tare wt g	.5171	.5149	.5179

Weight of particulate on filters(s) (m_p)	g	.0028	.0027	.0028
Weight of particulate in acetone rinse	g	.0135	.0134	.0134
Total weight of particulate (m_n)	g	.0163	.0161	.0162

Note: In no case should a blank residue greater than 0.01 mg/g (or 0.001% of the blank weight) be subtracted from the sample weight.

Remarks

Signature of analyst K.M. Rico Signature of reviewer [illegible]

(15)

COMPANY NAME I.A. Construction

Soluble and Insoluble Extraction for EPA Method 5 (back half)

Relative humidity in lab 55 %

		RUN 1	RUN 2	RUN 3
Impinger rinse volume (Filterable Extraction)	ml	320	342	284
Date/Time of wt. 6/6/07 8:30 Gross wt.	g	0.0326	0.0326	0.0322
Date/Time of wt. 6/6/07 9:30 Gross wt.	g	0.0326	0.0326	0.0322
Filter Avg. Gross wt.	g	0.0326	0.0326	0.0322
Tare wt.	g	0.0326	0.0326	0.0322
Weight of insoluble particulate impinger rinse	g	0.0000	0.0000	0.0000
Water evaporation	#	Imp 1	Imp 2	Imp 3
Date/Time of wt. 6/5/07 8:30 Gross wt.	g	95.2532	101.1637	94.9864
Date/Time of wt. 6/5/07 9:30 Gross wt.	g	95.2532	101.1636	94.9864
Beaker Avg. Gross wt.	g	95.2532	101.1637	94.9864
Tare wt.	g	95.2419	101.1442	94.9614
Weight of soluble particulate from water	g	0.0113	0.0195	0.0249
Total weight of particulate (m_n)	g	0.013	0.095	0.0248

Remarks

Signature of Analyst Kim Rea

Signature of Reviewer S Beck

VII. CALCULATIONS

NAME: I.A. CONSTRUCTION CORPORATION

LOCATION: BIGLER, PENNSYLVANIA

		date	5/29/87	5/29/87	5/29/8
	SUMMARY OF TEST DATA		RUN # 1	RUN # 2	RUN #
	SAMPLING TRAIN DATA	start	08:24	11:16	14:18
		finish	10:00	12:52	16:32
1	Sampling time, minutes	θ	84	84	84
2	Sampling nozzle diameter, in.	Dn	.220	.220	.220
3	Sampling nozzle cross-sectional area, ft^2	An	.000264	.000264	.000264
4	Isokinetic variation	I	90	97	92
5	Sample gas volume - meter conditions, cf.	Vm	45.73	57.17	55.27
6	Average meter temperature, °R	Tm	565	579	585
7	Average oriface pressure drop, in.H_2O	ΔH	1.03	1.16	1.13
8	Total particulate collected mg.	Mn	16.3	16.1	16.2
	VELOCITY TRAVERSE DATA				
9	Stack area, ft^2	A	9.4	9.4	9.4
10	Absolute stack gas pressure, in. Hg.	Ps	29.32	29.32	29.32
11	Barometric pressure, in. Hg.	Pbar	29.32	29.32	29.32
12	Average absolute stack temperature, °R	Ts	736	739	729
13	Average $\sqrt{\text{velocity head}}$, (Cp= .78)	$\sqrt{\Delta P}$	1.07	1.15	1.13
14	Average stack gas velocity ft. / sec.	Vs	70	75	73
	STACK MOISTURE CONTENT				
15	Total water collected by train, ml.	Vlc	353.0	359.0	308.0
16	Moisture in stack gas, %	Bws	28.7	25.0	23.0
	EMISSIONS DATA:				
17	Stack gas flow rate, dscf/hr. (000's)	Qsd	1,186	1,335	1,347
18	Total particulate concentration, gr/dscf	Cs	.0060	.0049	.0051
19	Total particulate concentration, lbs/hr	E	1.0	.9	1.0
20	Total particulate concentration, lbs/mbtu	E'	.0000	.0000	.0000
	ORSAT DATA				
21	Percent CO2 by volume	CO2	6.0	4.0	5.0
22	Percent O2 by volume	O2	10.3	8.0	9.5
23	Percent CO by volume	CO	.0	.0	.0
24	Percent N2 by volume	N2	83.7	88.0	85.5

Buzzycalc

Dry Gas Volume :

$$V_{m(std)} = V_m \left[\frac{T_{(std)}}{T_m} \right] \left[\frac{P_{bar} + \frac{\Delta H}{13.6}}{P_{(std)}} \right] = 17.64 \frac{^{\circ}R}{in.Hg.} \; Y \; V_m \left[\frac{P_{bar} + \frac{\Delta H}{13.6}}{T_m} \right]$$

Where:

$V_{m(std)}$ = Dry Gas Volume through meter at standard conditions, cu.ft.

V_m = Dry Gas Volume measured by meter, cu.ft.

P_{bar} = Barometric pressure at oriface meter, in. Hg.

P_{std} = Standard absolute pressure,(29.92 in. Hg.)

T_m = Absolute temperature at meter $^{\circ}R$

T_{std} = Standard absolute temperature (528$^{\circ}R$)

ΔH = Average pressure drop across oriface meter,in.H_2O

Y = Dry gas meter calibration factor

13.6 = Inches water per inches Hg.

Run # 1 $$V_{m(std)} = 17.64 \; (.99)(45.73) \left[\frac{(29.32) + \frac{1.03}{13.6}}{565} \right] = 41.55 \text{ dsc}$$

Run # 2 $$V_{m(std)} = 17.64 \; (.99)(57.17) \left[\frac{(29.32) + \frac{1.16}{13.6}}{579} \right] = 50.70 \text{ dsc}$$

Run # 3 $$V_{m(std)} = 17.64 \; (.99)(55.27) \left[\frac{(29.32) + \frac{1.13}{13.6}}{585} \right] = 48.51 \text{ dsc}$$

Total contaminants by weight: 'GRAIN LOADING'

Particulate concentration C_s' gr./dscf.

$$C_s' = \left[0.0154 \frac{gr}{mg} \right] \left[\frac{M_n}{V_{m(std)}} \right]$$

Where:

C_s' = Concentration of particulate matter in stack gas, dry basis, corrected to standard conditions, gr./dscf.

M_n = Total amount of particulate matter collected, mg.

$V_{m(std)}$ = Dry gas volume through meter at standard conditions, cu.ft.

Run # 1: $C_s' = \left[0.0154 \frac{gr}{mg} \right] \left[\frac{16.3}{41.55} \right] = .0060$ gr./dscf.

Run # 2: $C_s' = \left[0.0154 \frac{gr}{mg} \right] \left[\frac{16.1}{50.70} \right] = .0049$ gr./dscf.

Run # 3: $C_s' = \left[0.0154 \frac{gr}{mg} \right] \left[\frac{16.2}{48.51} \right] = .0051$ gr./dscf.

Dry molecular weight:

$$M_d = 0.44(\%CO_2) + 0.32(\%O_2) + 0.28(\%CO + \%N_2).$$

Where:

M_d	= Dry molecular weight, lb./lb.-mole.
$\%CO_2$	= Percent carbon dioxide by volume (dry basis).
$\%O_2$	= Percent oxygen by volume (dry basis).
$\%N_2$	= Percent nitrogen by volume (dry basis).
%CO	= Percent carbon monoxide by volume (dry basis).
0.264	= Ratio of O_2 to N_2 in air, v/v.
0.28	= Molecular weight of N_2 or CO, divided by 100.
0.32	= Molecular weight of O_2 divided by 100.
0.44	= Molecular weight of CO_2 divided by 100.

Run # 1: $M_d = 0.44(\ 6.0\%\ ) + 0.32(10.3\%\ ) + 0.28(\ \ .0\% + 83.7\%\ ) =\ \ 29.4$ lb./lb.-mole

Run # 2: $M_d = 0.44(\ 4.0\%\ ) + 0.32(\ 8.0\%\ ) + 0.28(\ \ .0\% + 88.0\%\ ) =\ \ 29.0$ lb./lb.-mole

Run # 3: $M_d = 0.44(\ 5.0\%\ ) + 0.32(\ 9.5\%\ ) + 0.28(\ \ .0\% + 85.5\%\ ) =\ \ 29.2$ lb./lb.-mole

Water vapor condensed :

$$V_{wc_{std}} = \left[V_f - V_i \right] \left[\frac{\rho_w}{M_w} \frac{R\ T_{(std)}}{P_{(std)}} \right] = 0.04707 \left[V_f - V_i \right]$$

$$V_{wsg_{std}} = \left[W_f - W_i \right] \left[\frac{R}{M_w} \frac{T_{(std)}}{P_{(std)}} \right] = 0.04715 \left[W_f - W_i \right]$$

Where:

0.04707 = Conversion factor ft^3/ml.

0.04715 = Conversion factor ft^3/g.

$V_{wc_{std}}$ = Volume of water vapor condensed (standard conditions) scf.

$V_{wsg_{std}}$ = Volume of water vapor collected in silica gel (standard conditions)

V_f = Final volume of impinger contents, ml.

V_i = Initial volume of impinger contents

ρ = Density of water, (0.002201 lb/ml).

R = Ideal gas constant, 21.85 (in.Hg.)(cu.ft./lb.-mole)(°R)

M_w = Molecular weight of water vapor (18.0 lb/lb-mole).

T_{std} = Absolute temperature at standard conditions, 528°R.

P_{std} = Absolute pressure at standard conditions, 29.92 inches Hg.

Run # 1:	$V_{wc(std)}$	= (0.04707)	(320.0) =	15.1	cu.ft
	$V_{wsg(std)}$	= (0.04715)	(33.0) =	1.6	cu ft
Run # 2:	$V_{wc(std)}$	= (0.04707)	(342.0) =	16.1	cu.ft
	$V_{wsg(std)}$	= (0.04715)	(17.0) =	.8	cu.ft
Run # 3:	$V_{wc(std)}$	= (0.04707)	(284.0) =	13.4	cu.ft
	$V_{wsg(std)}$	= (0.04715)	(24.0) =	1.1	cu.ft

(ar)

Moisture content of stack gases: $$B_{ws} = \frac{V_{wc_{std}} + V_{wsg_{std}}}{V_{wc_{std}} + V_{wsg_{std}} + V_{m_{std}}} \times 100$$

Where:

B_{ws} = Proportion of water vapor, by volume, in the gas stream.

V_m = Dry gas volume measured by dry gas meter, (dcf).

$V_{wc_{std}}$ = Volume of water vapor condensed corrected to standard conditions (scf).

$V_{wsg_{std}}$ = Volume of water vapor collected in silica gel corrected to standard conditions (scf).

Run # 1: $$B_{ws} = \frac{15.1 + 1.6}{15.1 + 1.6 + 41.55} \times 100 = 28.7\ \%$$

Run # 2: $$B_{ws} = \frac{16.1 + .8}{16.1 + .8 + 50.70} \times 100 = 25.0\ \%$$

Run # 3: $$B_{ws} = \frac{13.4 + 1.1}{13.4 + 1.1 + 48.51} \times 100 = 23.0\ \%$$

Molecular weight of stack gases: $M_s = M_d\ (1-B_{ws}) + 18\ (B_{ws})$.

Where:

M_s = Molecular weight of stack gas, wet basis, (lb./lb.-mole).

M_d = Molecular weight of stack gas, dry basis, (lb./lb.-mole).

Run # 1: $M_s = 29.4\ (1-.287) + 18\ (.287) = 26.1$ (lb./lb.-mole).

Run # 2: $M_s = 29.0\ (1-.250) + 18\ (.250) = 26.3$ (lb./lb.-mole).

Run # 3: $M_s = 29.2\ (1-.230) + 18\ (.230) = 26.6$ (lb./lb.-mole).

Stack gas velocity:

$$V_s = K_p \; C_p \left[\sqrt{\Delta P} \right]_{avg.} \sqrt{\frac{T_{s(avg.)}}{P_s \; M_s}}$$

Where:

V_s = Average velocity of gas stream in stack, ft./sec.

K_p = 85.49 ft/sec $\left[(g/g\text{-mole})\text{-}(mm\ Hg) \;/\; (^{\circ}K)(\ mm\ H_2O \right]^{1/2}$

C_p = Pitot tube coefficient,(dimensionless).

ΔP = Velocity head of stack gas, in. H_2O.

P_{bar} = Barometric pressure at measurement site, (in.Hg).

P_g = Stack static pressure (in.Hg).

P_s = Absolute stack gas pressure, (in.Hg) = $P_{bar} + P_g$

P_{std} = Standard absolute pressure, (29.92 in.Hg).

t_s = Stack temperature, ($^{\circ}$f).

T_s = Absolute stack temperature, ($^{\circ}$R). = 460 + t_s.

M_s = Molecular weight of stack gas, wet basis, (lb/lb-mole).

Run # 1: $V = (85.49)\ (\ .78)\ (\ 1.07) \sqrt{\frac{736}{(29.32)(26.13)}} = 69.93$ ft/se

Run # 2: $V = (85.49)\ (\ .78)\ (\ 1.15) \sqrt{\frac{739}{(29.32)(26.25)}} = 75.14$ ft/se

Run # 3: $V = (85.49)\ (\ .78)\ (\ 1.13) \sqrt{\frac{729}{(29.32)(26.62)}} = 72.82$ ft/se

Stack gas flow rate:

$$Q_{sd} = 3600 \left[1 - B_{wc} \right] V_s \, A \left[\frac{T_{std}}{T_{stk}} \right] \left[\frac{P_s}{P_{std}} \right]$$

Where:

Q_{sd} = Dry volumetric stack gas flow rate corrected to standard conditions, (dscf/hr).

A = Cross sectional area of stack $(ft.)^2$

3600 = Conversion factor, sec./hr.

t_s = Stack temperature (°f).

T_s = Absolute stack temperature, (°R).

T_{std} = Standard absolute temperature, (528°R).

P_{bar} = Barometric pressure at measurement site, (in.Hg.).

P_g = Stack static pressure, (in.Hg.).

P_s = Absolute stack gas pressure, (in.Hg.); = $P_{bar} + P_g$

P_{std} = Standard absolute pressure, (29.92 in.Hg.)

Run # 1:

$$Q_{sd} = 3600 \; (1-.287) \; (69.93) \; (9.4) \left[\frac{528}{736} \right] \left[\frac{29.32}{29.92} \right] = 1186156 \text{ dscf/}$$

Run # 2:

$$Q_{sd} = 3600 \; (1-.250) \; (75.14) \; (9.4) \left[\frac{528}{739} \right] \left[\frac{29.32}{29.92} \right] = 1335226 \text{ dscf/}$$

Run # 3:

$$Q_{sd} = 3600 \; (1-.230) \; (72.82) \; (9.4) \left[\frac{526}{729} \right] \left[\frac{29.32}{29.92} \right] = 1346730 \text{ dscf/}$$

Emissions rate from stack:

$$E = \frac{(C_s)(Q_{sd})}{7000 \text{ gr./lb.}} = \text{lb. / hr.}$$

Where:

E = Emissions rate, lb./hr.

C = Concentration of particulate matter in stack gas, dry basis, corrected to standard conditions (gr/dscf).

Q = Dry volumetric stack gas flow rate corrected to standard conditions, (dscf/hr).

Run # 1: $$E = \frac{(.0060)(1186156)}{7000} = 1.0 \text{ lb. / hr.}$$

Run # 2: $$E = \frac{(.0049)(1335226)}{7000} = .9 \text{ lb. / hr.}$$

Run # 3: $$E = \frac{(.0051)(1346730)}{7000} = 1.0 \text{ lb. / hr.}$$

Isokinetic variation : $I = 100\ T_s \left[\dfrac{0.002669\ V_{lc} + (V_m/T_m)(P_{bar} + \Delta H/13.6)}{60\ \ \theta\ \ V_s\ \ P_s\ \ A_n} \right]$

Where:

I	=	Percent isokinetic sampling.
100	=	Conversion to percent.
T_s	=	Absolute average stack gas temperature, °R.
0.002669	=	Conversion factor, Hg - ft^3/ml - °R.
V_{lc}	=	Total volume of liquid collected in impingers and silica gel,
T_m	=	Absolute average dry gas meter temperature, °R.
P_{bar}	=	Barometric pressure at sampling site, (in.Hg).
ΔH	=	Average pressure differential across the oriface meter, (in.H_2
13.6	=	Specific gravity of mercury.
60	=	Conversion seconds to minutes
θ	=	Total sampling time, minutes.
V_s	=	Stack gas velocity, ft./sec.
P_s	=	Absolute stack gas pressure, in.Hg.
A_n	=	Cross sectional area of nozzle, ft^2.

RECEIVED
JUN 19 1987
DER-AIR QUALITY CONTROL
WILLIAMSPORT REGION

Run # 1:

$$I = 100 \times 736 \left[\frac{(0.002669)(353.0) + \frac{45.7}{565}\left[29.32 + \frac{1.03}{13.6}\right]}{60\ (\ 84\ )\ (\ 69.93\ )\ (29.32\ )\ (\ .000264\ )} \right] = 90\ \%$$

Run # 2:

$$I = 100 \times 739 \left[\frac{(0.002669)(359.0) + \frac{57.2}{579}\left[29.32 + \frac{1.16}{13.6}\right]}{60\ (\ 84\ )\ (\ 75.14\ )\ (29.32\ )\ (\ .000264\ )} \right] = 97\ \%$$

Run # 3:

$$I = 100 \times 729 \left[\frac{(0.002669)(308.0) + \frac{55.3}{585}\left[29.32 + \frac{1.13}{13.6}\right]}{60\ (\ 84\ )\ (\ 72.82\ )\ (29.32\ )\ (\ .000264\ )} \right] = 92\ \%$$

VIII. FIELD DATA

RAMCON ENVIRONMENTAL CORPORATION

Plant TA

Location Baker Dem.
Operator COLLAZO
Date 5-29-87
Run No. 1
Sample Box No. 3
Meter Box No. 1689836
Meter H @ 1.57
C Factor 0.99
Pitot Tube Coefficient Cp 0.78

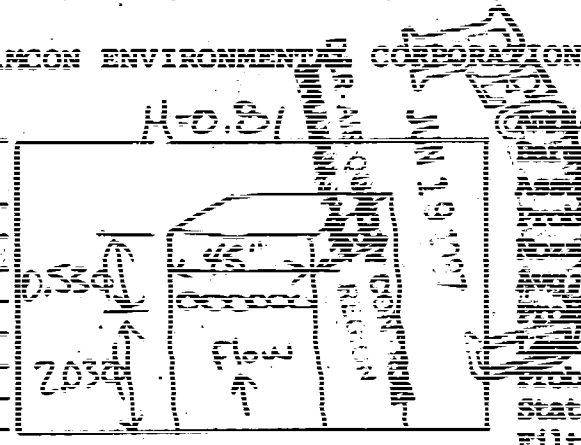

Ambient Temperature	79°F		
Barometric Pressure	29.32 mm	520	531
Assumed Moisture, %	2.5	200	498
Probe Length, m(ft)	3.81	520	33
Nozzle Identification No.	0.00026		
Avg Calibrated Nozzle Dia., (in.)	0.206 in	0.200	
Probe Heater Setting	6		
Sampling Rate, m³/min. (cfm)	0.08		
Probe Liner Material	316 Stainless		
Static Pressure, mm Hg(in.Hg)	-0.01(-0.6)		
Filter No.	SG-1856		

Schematic of Stack Cross Section

TRAV. PT NO.	SAMPLING TIME (θ) min.	VACUUM in. Hg	STACK TEMP (Ts) °F	VELOCITY HEAD (Ps) in H2O	PRESSURE DIFF. ORF. MTR in H2O	GAS SAMPLE VOLUME ft³	GAS SAMPLE TEMP. AT DRY GAS METER °F Inlet	Outlet	FILTER HOLDER TEMP °F	GAS TEMP DIS CONDENSER OR LAST IMPINGER °F
A) 1	8:27 ~~8:28~~	7	275	2.8	2.3	429.00	80	80	260	55
2	8:31	8	280	2.6	2.1	427.65	90	80	265	55
3	8:35	4	280	1.5	1.2	429.88	100	80	250	55
4	8:38	3	280	0.8	0.65	571.26	110	80	200	55
B) 1	8:44 ~~8:44~~	4	260	1.6	1.3	574.50	100	80	250	55
2	8:48	7	275	2.2	1.8	577.44	115	85	250	55
3	8:51	7	280	2.3	1.9	580.32	115	90	200	55
4	8:55	3	280	0.9	0.75	581.75	120	90	260	55
C) 1	8:57 ~~9:01~~	5	260	1.9	1.5	584.93	110	90	190	55
2	9:04	5	275	1.5	1.2	587.22	120	90	250	60
3	9:08	4	280	1.3	1.1	588.75	120	90	265	60
4	9:11	4	280	1.0	0.81	591.22	125	90	240	60
D) 1	9:14 ~~9:17~~	6	275	2.2	1.8	594.31	115	95	250	60

$\Delta H = 1.0\%$ $\Delta H = 1.0\%$ $\Delta_1 = 9.0\%$ $\Delta_2 = 11.5\%$

Form #REC-08

RAMCON emissions test log sheet, cont. DATE 5-29-87 LOCATION Baker, Pa TEST NO. 1

TRAVERSE POINT	SAMPLING TIME θ (min)	VACUUM mm Hg (in. Hg)	STACK TEMP T_s (°F)	VELOCITY HEAD ΔP_s (in. H_2O)	ORIFICE DIFF. PRESSURE ΔH (in. H_2O)	GAS VOLUME V_m (ft^3)	GAS SAMPLE TEMP. (°F) in	GAS SAMPLE TEMP. (°F) out	SAMPLE BOX TEMP. (°F)	IMPINGER TEMP (°F)
2	9:21	4	280	1.2	0.97	597.02	125	95	270	55
3	9:24	3	280	0.80	0.65	598.81	130	100	270	55
4	9:28	3	275	0.70	0.57	600.07	130	100	240	55
B) 1	9:30	4	275	1.4	1.1	602.86	120	100	200	55
2	9:37	2	280	0.4	0.32	603.91	130	100	250	55
3	9:41	1	275	0.3	0.24	604.95	130	100	250	60
4	9:44	2	275	0.4	0.32	605.79	130	100	230	60
A) 1	9:50	5	270	2.0	1.6	609.13	120	100	240	60
2	9:53	2	275	0.4	0.32	610.17	130	100	210	60
3	9:57	1	275	0.2	0.16	610.70	130	100	270	60
4	10:00	1	275	0.2	0.16	611.33	130	100	240	60

JUN 19 1987
AIR POLLUTION CONTROL

RAMCON ENVIRONMENTAL CORPORATION

Plant: IA
Location: Bigler Penn
Operator: J.C. [illegible]
Date: 5-25-87
Run No.: 2
Sample Box No.: 2
Meter Box No.: 6837836
Meter H @: 1.37
C Factor: 0.99
Pitot Tube Coefficient Cp: 0.78

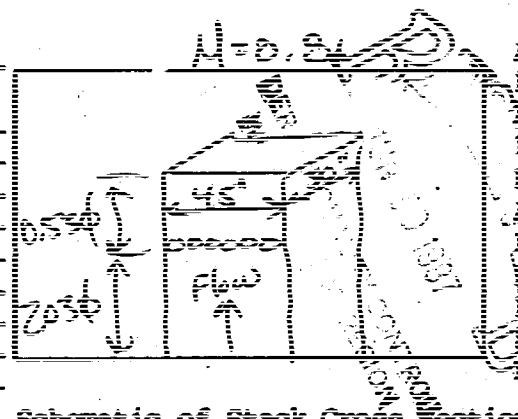

Schematic of Stack Cross Section

Ambient Temperature	92°F	
Barometric Pressure	29.32 in	542 / 512
Assumed Moisture, %	20	20.0 / 19.5
Probe Length, m(ft)	3.9	3.42 / 11
Nozzle Identification No.	0.0002364	
Avg. Calibrated Nozzle Dia., (in.)	0.220/0.220/0.220	
Probe Heater Setting	6	
Leak Rate, m³/min. (cfm)	0.02	
Probe Liner Material	SS	Glass / SS
Static Pressure, mmHg(in.Hg)	-0.01/15.6	
Filter No.	SG-1832	

TRAV. PT NO.	SAMPLING TIME (θ) min.	VACUUM in. Hg	STACK TEMP (Ts) °F	VELOCITY HEAD (Ps) in H2O	PRESSURE DIFF. ORF. MTR in H2O	GAS SAMPLE VOLUME ft³	GAS SAMPLE TEMP. AT DRY GAS METER °F Inlet	Outlet	FILTER HOLDER TEMP °F	GAS TEMP LVG CONDENSER OR LAST IMPINGER °F
A) 1	11:20	5	270	1.7	1.4	646.35	100	100	270	55
2	11:23	1	280	0.2	0.16	646.87	115	100	230	55
3	11:27	1	280	0.25	0.20	648.28	115	100	250	55
4	11:30	2	280	0.40	0.32	648.99	125	100	270	55
B) 1	11:34	4	275	1.5	1.2	652.11	120	100	230	55
2	11:41	3	280	0.7	0.57	653.61	130	100	180	55
3	11:44	3	275	1.0	0.81	655.68	130	100	200	55
4	11:48	5	280	1.5	1.2	657.64	135	105	250	55
C) 1	11:50	7	275	2.2	1.8	659.66	130	105	265	60
2	11:57	5	280	1.2	0.97	663.50	130	105	250	60
3	12:00	4	280	1.0	0.81	665.56	135	105	250	60
4	12:04	5	275	1.2	0.97	667.70	140	105	235	60
D) 1	12:07	7	275	2.2	1.8	669.73	130	110	245	60

O_2 = 8.0% CO_2 = 4.0%

RAMCON emissions test log sheet, cont. DATE 5-29-87 LOCATION Bixby Park TEST NO. 2

TRAVERSE POINT	SAMPLING TIME θ (min)	VACUUM mm Hg (in. Hg)	STACK TEMP T_s (°F)	VELOCITY HEAD ΔP_s (in. H_2O)	ORFICE DIFF. PRESSURE ΔH (in. H_2O)	GAS VOLUME V_m (ft^3)	GAS SAMPLE TEMP. (°F) in	GAS SAMPLE TEMP. (°F) out	SAMPLE BOX TEMP. (°F)	IMPINGER TEMP (°F)
2	12:13	6	280	1.5	1.2	645.30	135	110	255	60
3	12:16	5	280	1.5	1.2	645.70	140	110	260	60
4	12:20	4	285	0.9	0.75	647.52	140	110	260	60
E) 1	12:24	6	280	1.8	1.5	650.58	130	110	250	60
2	12:29	8	285	2.4	1.9	654.13	140	110	250	60
3	12:33	7	285	2.0	1.6	656.52	140	110	270	55
4	12:36	7	285	1.8	1.5	659.00	140	110	240	55
F) 1	12:42	9	275	2.8	2.3	663.12	130	110	250	65
2	12:46	9	280	2.6	2.1	666.81	135	110	265	65
3	12:49	6	285	1.4	1.1	668.58	140	110	250	65
4	12:52	3	280	0.7	0.57	670.01	140	110	255	65

JUN 16 1987
DEP-AIR QUALITY CONTROL
WILLIAMSPORT REGIONAL

RAMCON ENVIRONMENTAL CORPORATION

Plant: IA
Location: Butler, Penn.
Operator: D.G. (MLX LAD)
Date: 5-29-87
Run No.: 3
Sample Box No.: 3
Meter Box No.: 4.09856
Meter H @: 1.37
C Factor: 0.99
Pitot Tube Coefficient Cp: 0.78

H=0.81

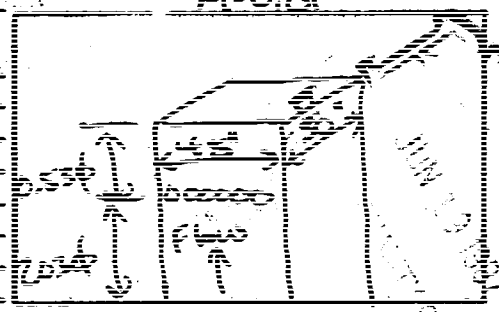

Schematic of Stack Cross Section

Ambient Temperature	100°F		
Barometric Pressure	29.32 in	484	497
Assumed Moisture, %	20	260	473
Probe Length, m(ft)	3.66	284	24
Nozzle Identification No.	0.000264		
Avg/Calibrated Nozzle Dia., (in.)	0.220/0.220		
Probe/Heater Setting	6		
Leak Rate, m³/min. (cfm)	0.02		
Probe Liner Material	316 Stainless		
Static Pressure, mm Hg(in. Hg)	-0.01 (0.4)		
Filter No.	SG-1839		

TRAV. PT NO.	SAMPLING TIME (θ) min.	VACUUM in. Hg	STACK TEMP (T_s) °F	VELOCITY HEAD (P_s) in H2O	PRESSURE DIFF. ORF. MTR in H2O	GAS SAMPLE VOLUME ft³	GAS SAMPLE TEMP. AT DRY GAS METER °F Inlet	Outlet	FILTER HOLDER TEMP. °F	GAS TEMP IN CONDENSER OR LAST IMPINGER °F
A) 1	14:18 14:20	6	245	2.6	2.1	668.40	115	110	200	55
2	14:26	7	255	3.0	2.4	678.37	130	110	250	55
3	14:28	7	265	2.5	2.6	681.05	135	110	260	55
4	14:32	2	270	0.7	0.58	682.61	140	110	240	55
B) 1	14:35 14:37	5	255	2.2	1.8	684.05	130	110	255	55
2	14:41	6	265	2.2	1.8	689.14	140	110	260	55
3	14:44	6	280	2.2	1.8	692.42	140	110	270	55
4	14:46	5	280	1.0	0.81	695.89	145	110	265	60
C) 1	14:49 14:51	6	275	2.1	1.7	697.41	135	115	220	60
2	14:57	4	280	1.5	1.2	700.00	140	115	235	65
3	15:01	4	280	1.2	0.97	702.05	145	115	230	65
4	15:04	3	280	0.8	0.65	703.55	145	115	265	65
D) 1	15:07 15:10	4	270	1.3	1.1	704.40	140	110	260	65

* Plant down

M_D = 50.0% O_2 = 9.5%

Form #REC-06

RAMCON emissions test log sheet, cont. DATE 5-29-87 LOCATION [illegible] TEST NO. 3

TRAVERSE POINT	SAMPLING TIME θ (min)	VACUUM mm Hg (in. Hg)	STACK TEMP T_s (°F)	VELOCITY HEAD ΔP_s (in. H_2O)	ORIFICE DIFF. PRESSURE ΔH (in. H_2O)	GAS VOLUME V_m (ft^3)	GAS SAMPLE TEMP. (°F) in	GAS SAMPLE TEMP. (°F) out	SAMPLE BOX TEMP. (°F)	IMPINGER TEMP (°F)
2	15:13	3	280	1.0	0.81	708.36	140	110	200	55
3	15:17	2	285	0.7	0.57	709.86	145	115	250	55
4	15:20	2	285	0.5	0.40	711.04	150	120	235	55
B) 1	15:24	4	270	1.3	1.1	713.74	140	120	255	60
2	15:29	3	275	0.8	0.65	715.88	150	120	220	60
3	15:33	1	260	0.4	0.32	716.75	150	120	240	65
4	[illegible]	4	260	1.5	1.2	718.79	110	110	255	65
A) 1	[illegible]	7	265	2.4	1.9	722.36	125	110	265	60
2	16:25	3	255	0.9	0.73	724.15	130	110	250	60
3	16:28	1	265	0.3	0.24	725.17	135	110	220	65
4	16:32	1	265	0.3	0.24	726.24	135	110	200	65

JUN 16 1987
DEPARTMENT OF ENVIRONMENTAL QUALITY

IEK. CALIBRATIONS

(3a)

RECEIVED
JUN 19 1987
AIR QUALITY CONTROL
WILLIAMSPORT REGION

METER BOX CALIBRATION DATA AND CALCULATION FORM

(English units)

Date 6/3/87 Meter box number 5656C

Barometric pressure, P_b = 29.4 in. Hg Calibrated by S. Dammann

Orifice manometer setting (ΔH), in. H_2O	Gas volume: Wet test meter (V_w), ft^3	Gas volume: Dry gas meter (V_d), ft^3	Temperature: Wet test meter (t_w), °F	Temperature: Dry gas meter: Inlet (t_{d_i}), °F	Temperature: Dry gas meter: Outlet (t_{d_o}), °F	Temperature: Dry gas meter: Avg[a] (t_d), °F	Time (θ), min	Y_i	$\Delta H@_i$ in. H_2O
0.5	5	96.55	90	88	88	88	10	1.01	1.39
1.0	5	99.50	90	88	88	88	6.50	1.003	1.31
1.5	10	99.95	90	88	88	88	8	1.009	1.34
2.0	10								
3.0	10								
4.0	10								
							Avg	1.005	1.35

ΔH, in. H_2O	$\frac{\Delta H}{13.6}$	$Y_i = \frac{V_w P_b (t_d + 460)}{V_d (P_b + \frac{\Delta H}{13.6})(t_w + 460)}$	$\Delta H@_i = \frac{0.0317\ \Delta H}{P_b (t_d + 460)} \left[\frac{(t_w + 460)\ \theta}{V_w}\right]^2$
0.5	0.0368		
1.0	0.0737		
1.5	0.110		
2.0	0.147		
3.0	0.221		
4.0	0.294		

[a] If there is only one thermometer on the dry gas meter, record the temperature under t_d.

Quality Assurance Handbook M4-2.3A (front side)

Form #REC-02

POSTTEST DRY GAS METER CALIBRATION DATA FORM (English units)

Test number _____ Date 4-30-87 Meter box number 3 Plant McMak

Barometric pressure, P_b = 29.71 in. Hg Dry gas meter number 669636 Pretest Y .99

Orifice manometer setting, (ΔH), in. H_2O	Gas volume: Wet test meter (V_w), ft^3	Gas volume: Dry gas meter (V_d), ft^3	Temperature: Wet test meter (t_w), °F	Temperature: Dry gas meter: Inlet (t_{d_i}), °F	Temperature: Dry gas meter: Outlet (t_{d_o}), °F	Temperature: Dry gas meter: Average[a] (t_d), °F	Time (θ), min	Vacuum setting, in. Hg	Y_i	$Y_i \frac{V_w P_b (t_d + 460)}{V_d (P_b + \frac{\Delta H}{13.6})(t_w + 460)}$
	10	10.2	76	76	100	88	15.5	5	.997	1.34
	10	10.2	76	79	100	90	15.7	5	1.003	1.44
	10	10.2	76	80	100	90	15.3	5	.99	1.36
									Y = .99	

[a] If there is only one thermometer on the dry gas meter, record the temperature under t_d

where

V_w = Gas volume passing through the wet test meter, ft^3.

V_d = Gas volume passing through the dry gas meter, ft^3.

t_w = Temperature of the gas in the wet test meter, °F.

t_{d_i} = Temperature of the inlet gas of the dry gas meter, °F.

t_{d_o} = Temperature of the outlet gas of the dry gas meter, °F.

t_d = Average temperature of the gas in the dry gas meter, obtained by the average of t_{d_i} and t_{d_o}, °F.

ΔH = Pressure differential across orifice, in. H_2O.

Y_i = Ratio of accuracy of wet test meter to dry gas meter for each run.

Y = Average ratio of accuracy of wet test meter to dry gas meter for all three runs; tolerance = pretest Y ±0.05Y.

P_b = Barometric pressure, in. Hg.

θ = Time of calibration run, min.

RAMCON

Lear Siegler Stack Sampler

Heating Probe Calibration

Probe No. 3a Probe Length 3 ft.

Date of Calibration [illegible] Signature [illegible]

Name of Company to be tested

Note: 3 ft. probe - 5 min. warmup
6 ft. probe - 15 min. warmup
10 ft. probe - 30 min. warmup
Calibration flow rate = .75 CFM

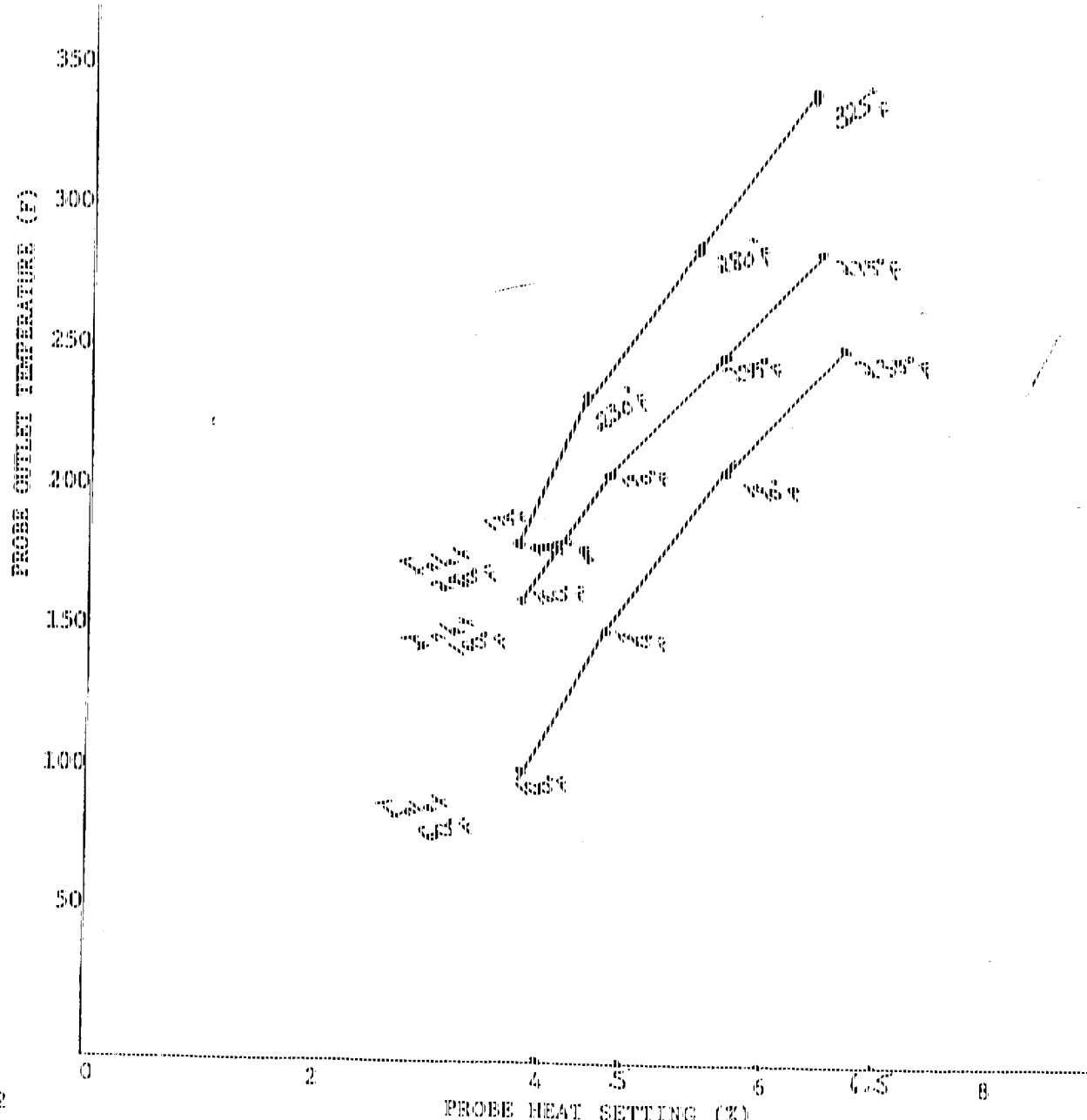

STACK TEMPERATURE SENSOR CALIBRATION DATA FORM

Date [illegible] Thermocouple number [illegible]

Ambient temperature [illegible] °C Barometric pressure [illegible] in. Hg

Calibrator [illegible] Reference: mercury-in-glass ✓

other

Reference point number[a]	Source[b] (specify)	Reference thermometer temperature, °C	Thermocouple potentiometer temperature, °C	Temperature difference[c], %
[illegible]	[illegible]	[illegible]	[illegible]	[illegible]
[illegible]	[illegible]	[illegible]	[illegible]	[illegible]
[illegible]	[illegible]	[illegible]	[illegible]	.007%
[illegible]	[illegible]	[illegible]	[illegible]	[illegible]
	5-22-62	[illegible]	[illegible]	0%

[a] Every 30°C (50°F) for each reference point.

[b] Type of calibration system used.

[c] $\left[\frac{(\text{ref temp, °C} + 273) - (\text{test thermom temp, °C} + 273)}{\text{ref temp, °C} + 273}\right] 100 \leq 1.5\%.$

PITOT TUBE CALIBRATION DATA

Calibration pitot tube: type S size (OD) 3/8 ID number 32

Type S pitot tube ID number 32 $C_{p(std)}$ = 1

Calibration: date 1-8-87 performed by [illegible]

A-Side Calibration

Δp_{std}, cm (in.) H_2O	Δp_s, cm (in.) H_2O	$C_{p(S)}$ [a]	DEV. [b]
.15	1.6	.77	.01
.19	1.2	.77	.02
.14	1.3	.79	.01
	Average	.78	

B-Side Calibration

Δp_{std}, cm (in.) H_2O	Δp_s, cm (in.) H_2O	$C_{p(S)}$ [a]	DEV. [b]
.15	1.55	.78	.00
.19	1.2	.78	.00
.14	1.3	.79	.01
	Average	.78	

[a] $C_{p(S)} = C_{p(std)} \sqrt{\frac{\Delta p_{std}}{\Delta p_s}}$ = _____

[b] DEV = $C_{p(S)} - \bar{C}_p$, (must be ≤ 0.01)

$\bar{C}_p(A) - \bar{C}_p(B)$ = _____ (must be ≤ 0.01).

STACK TEMPERATURE SENSOR CALIBRATION DATA FORM

Date 6-17-86 Thermocouple number inlet/outlet

Ambient temperature 24 °C Barometric pressure 29.95 in. Hg

Calibrator [illegible] Reference: mercury-in-glass ✓

other

Reference point number	Source[a] (specify)	Reference thermometer temperature, °C	Thermocouple potentiometer temperature, °C	Temperature difference,[b] %
A	inlet [illegible]	24 °C	24 °C	0
B	outlet [illegible]	24 °C	24 °C	0
C	outside 5-29-17	77°F	77°F	0%

[a]Type of calibration system used.

[b] $\left[\frac{(\text{ref temp, °C} + 273) - (\text{test thermom temp, °C} + 273)}{\text{ref temp, °C} + 273}\right] 100 \leq 1.5\%$.

STACK TEMPERATURE SENSOR CALIBRATION DATA FORM

Date 6-11-86 Thermocouple number [illegible]

Ambient temperature 84 °C Barometric pressure 29.25 in. Hg

Calibrator S. [illegible] Reference: mercury-in-glass ✓

other

Reference point number	Source[a] (specify)	Reference thermometer temperature, °C	Thermocouple potentiometer temperature, °C	Temperature difference,[b] %
A	Boiling water	100 °C	100 °C	0
B	Ice	24 °C	23.9	<.1 %
C	ambient			
	5-25-82	75°F	75°F	0%

[a]Type of calibration system used.

[b] $\left[\frac{(\text{ref temp, °C} + 273) - (\text{test thermom temp, °C} + 273)}{\text{ref temp, °C} + 273}\right] 100 \leq 1.5\%$.

K. RAMCON PERSONNEL

RAMCON Environmental Stack Test Team

Sumner Buck - President

Sumner Buck is the President of RAMCON Environmental. He is a graduate of the EPA 450 "Source Sampling for Particulate Pollutants" course and the 474 "Continuous Emissions Monitoring" course all given at RTP. Mr. Buck is a qualified V.E. reader with current certification. Mr. Buck has personally sampled over 300 stacks including over 100 asphalt plants. He is 44 years old and a graduate of the University of Mississippi with graduate studies at Memphis State University and State Technical Institute of Memphis.

J. Cameron Mitchell - Team Leader

Cameron Mitchell has been employed by RAMCON for several years. He has undergone extensive training in Methods 1 through 9. He is qualified as a team leader and has personally sampled over 250 stacks including over 200 asphalt plants. He is currently certified as a V.E. reader. He recently graduated from Memphis State University with a Bachelors Degree in Civil Engineering and a minor in Mathematics.

RECEIVED
JAN 19 1987
DEQ-AIR QUALITY CONTROL
SPECKANSPERT REGION

Commonwealth of Pennsylvania
Environmental Resources
October 23, 1990

Subject: Source Test Review

To: Data File
L.A. Construction Corporation
Zelienople Asphalt Plant
Jackson Township, Butler County

From: John S. Pitulski
Air Quality Program Specialist
Division of Technical Services and Monitoring
Bureau of Air Quality Control

Through: Chief, Source Testing and Monitoring Section

L.A. Construction operates a McCarter Corporation batch-mix asphalt plant at the aforementioned location. The plant has a rated production capacity of 160 tons per hour. Emissions from the facility are controlled by a newly installed Standard Havens fabric collector which replaces an existing baghouse collector unit.

Particulate emission testing was conducted on the baghouse exhaust by representatives of Ramcon Environmental Corporation on September 11, 1990. The tests appear to have been conducted in accordance with all applicable test methods and are acceptable to the Department.

The following data was extracted from the test reports:

Test Run Number	1	2	3
Aggregate Feed Rate (tons/hr)	160	160	160
Volumetric Flowrate (dscfm)	24167	25167	25150
Particulate Emission Rate (lb/hr)	1.4	1.7	1.9
Particulate Concentration (gr/dscf)	0.007	0.008	0.009
Allowable Concentration (gr/dscf)	0.04	0.04	0.04

ccs: Devendra Varma, Meadville Regional Office
Permit File No. 10-303-006
EPA/ESL
Reading File - Stack Test
Douglas Lesher

JSPadlg