Note: This is a reference cited in *AP 42, Compilation of Air Pollutant Emission Factors, Volume I Stationary Point and Area Sources.* AP42 is located on the EPA web site at www.epa.gov/ttn/chief/ap42/

The file name refers to the reference number, the AP42 chapter and section. The file name "ref02_c01s02.pdf" would mean the reference is from AP42 chapter 1 section 2. The reference may be from a previous version of the section and no longer cited. The primary source should always be checked.

AP42 Section: 11.1

Reference Number: 16

Title: Source Assessment: Asphalt Paving Hot Mix,

Z. S. Kahn and T. W. Hughes,
EPA-600/2-77-107n,

U. S. Environmental Protection Agency, Cincinnati, OH,

December 1977.

ASPHALT CONCRETE
PLANTS
AP-42 Section 8.1
Reference Number
16

EPA-600/2-77-107n
December 1977

Environmental Protection T

UNITED STATES ENVIRONMENTAL PROTECTION AGENCY

RESEARCH REPORTING SERIES

Research reports of the Office of Research and Development, U.S. Environmental Protection Agency, have been grouped into nine series. These nine broad categories were established to facilitate further development and application of environmental technology. Elimination of traditional grouping was consciously planned to foster technology transfer and a maximum interface in related fields. The nine series are:

1. Environmental Health Effects Research
2. Environmental Protection Technology
3. Ecological Research
4. Environmental Monitoring
5. Socioeconomic Environmental Studies
6. Scientific and Technical Assessment Reports (STAR)
7. Interagency Energy-Environment Research and Development
8. "Special" Reports
9. Miscellaneous Reports

This report has been assigned to the ENVIRONMENTAL PROTECTION TECHNOLOGY series. This series describes research performed to develop and demonstrate instrumentation, equipment, and methodology to repair or prevent environmental degradation from point and non-point sources of pollution. This work provides the new or improved technology required for the control and treatment of pollution sources to meet environmental quality standards.

This document is available to the public through the National Technical Information Service, Springfield, Virginia 22161.

EPA-600/2-77-107n
December 1977

SOURCE ASSESSMENT: ASPHALT HOT MIX

by

Z. S. Khan and T. W. Hughes

Monsanto Research Corporation
1515 Nicholas Road
Dayton, Ohio 45407

Contract No. 68-02-1874

Project Officer

Ronald J. Turner
Industrial Pollution Conrol Division
Industrial Environmental Research Laboratory
Cincinnati, Ohio 45268

INDUSTRIAL ENVIRONMENTAL RESEARCH LABORATORY
OFFICE OF RESEARCH AND DEVELOPMENT
U.S. ENVIRONMENTAL PROTECTION AGENCY
CINCINNATI, OHIO 45268

DISCLAIMER

This report has been reviewed by the Industrial Environmental Research Laboratory, U.S. Environmental Protection Agency, and approved for publication. Approval does not signify that the contents necessarily reflect the views and policies of the U. S. Environmental Protection Agency, nor does mention of trade names or commercial products constitute endorsement or recommendation for use.

FOREWORD

When energy and material resources are extracted, processed, converted, and used, the related pollutional impacts on our environment and even on our health often require that new and increasingly more efficient pollution control methods be used. The Industrial Environmental Research Laboratory - Cincinnati (IERL-CI) assists in developing and demonstrating new and improved methodologies that will meet these needs both efficiently and economically.

This report contains an assessment of air emissions from the asphalt hot mix industry. This study was conducted to provide EPA with sufficient information to decide whether additional control technology needs to be developed for this emission source. Further information on this subject may be obtained from the Industrial Environmental Research Laboratory, Cincinnati, 45268.

David G. Stephan
Director
Industrial Environmental Research Laboratory
Cincinnati

PREFACE

The Industrial Environmental Research Laboratory (IERL) of the U.S. Environmental Protection Agency (EPA) has the responsibility for insuring that pollution control technology is available for stationary sources to meet the requirements of the Clean Air Act, the Water Act and solid waste legislation. If control technology is unavailable, inadequate, uneconomical, or socially unacceptable, then financial support is provided for the development of the needed control techniques for industrial and extractive process industries. Approaches considered include: process modifications, feedstock modifications, add-on control devices, and complete process substitution. The scale of the control technology programs ranges from bench- to full-scale demonstration plants.

IERL has the responsibility for developing control technology for a large number (>500) of operations in the chemical and related industries. As in any technical program, the first step is to identify the unsolved problems. Each of the industries is to be examined in detail to determine if there is sufficient potential environmental risk to justify the development of control technology by IERL. This report contains the data necessary to make that decision for asphalt hot mix manufacture.

Monsanto Research Corporation has contracted with EPA to investigate the environmental impact of various industries that represent sources of emissions in accordance with EPA's responsibility, as outlined above. Dr. Robert C. Binning serves as Program Manager in this overall program, entitled "Source Assessment," which includes the investigation of sources in each of four categories: combustion, organic materials, inorganic materials, and open sources. Dr. Dale A. Denny of the Industrial Processes Division at Research Triangle Park serves as EPA Project Officer for this series. This study of asphalt hot mix plants was initiated by IERL-Research Triangle Park in August 1974; Mr. Kenneth Baker served as EPA Project Leader. The project was transferred to the Industrial Pollution Control Division, IERL-Cincinnati, in October 1975; Mr. Ronald J. Turner served as EPA Project Leader from that time through completion of the study.

ABSTRACT

This report summarizes the assessment of air emissions from asphalt hot mix manufacture. The study was completed to provide EPA with sufficient information to determine whether additional control technology needs to be developed for this emission source.

Asphalt hot mix is produced by mixing hot dry aggregate with hot liquid asphalt cement in a batch process or continuous process. Some asphalt hot mix is produced using a dryer drum process in which wet aggregate is dried and mixed with hot liquid asphalt cement simultaneously in a dryer. Major emission points within a plant are the stack and the mixer.

To assess the severity of emissions from this industry, a representative plant was defined based on the results of an industrial survey. This plant utilized the batch process with specific mean values for various plant parameters. Source severity was defined as the ratio of the maximum time-averaged ground level concentration of a pollutant to the primary ambient air quality standard for criteria pollutants or to a reduced threshold limit value for noncriteria pollutants. For a representative plant, source severities for particulate, nitrogen oxides, sulfur oxides, hydrocarbons, and carbon monoxide are 4.02, 1.83, 0.67, 0.96, and 0.01, respectively.

A decrease in particulate emissions from this industry, in the range of 42% to 60%, is expected over the period 1973 to 1978. The asphalt hot mix industry contributes to the national emissions for particulate, sulfur oxides, nitrogen oxides, total hydrocarbons, and carbon monoxide in the amounts of 0.35%, 0.05%, 0.03%, 0.024%, and 0.009%, respectively.

Primary collectors, used for control of dust >10 μm, include settling chambers, centrifugal dry collectors, and multi-cyclones. Secondary collectors, used for micron and sub-micron particles, include gravity spray towers, cyclone scrubbers, venturi scrubbers, orifice scrubbers, and fabric filters.

This report was submitted in partial fulfillment of Contract No. 68-02-1874 by Monsanto Research Corporation under the sponsorship of the U.S. Environmental Protection Agency. This report covers the period August 1974 to April 1977, and the work was completed as of July 1977.

CONTENTS

Foreword	iii
Preface	iv
Abstract	v
Figures	ix
Tables	xi
Abbreviations and Symbols	xv
Conversion Factors and Metric Prefixes	xviii
1. Introduction	1
2. Summary	2
3. Source Description	7
A. Process Description	9
B. Materials Flow	34
C. Geographical Distribution	34
4. Emissions	39
A. Locations and Descriptions	39
B. Emission Factors	44
C. Definition of a Representative Source	52
D. Environmental Effects	54
5. Control Technology	69
A. Primary Collectors	72
B. Secondary Collectors	75
6. Growth and Nature of the Industry	89
A. Present Technology	89
B. Industry Production Trends	90
C. Outlook	94

CONTENTS (Continued)

	Page
Appendices	95
A. Industry Survey - Summary of Results	95
B. Results from Representative Plant Sampled by MRC	98
C. Data Used to Determine Particulate Source Severity Distribution	114
D. Derivation of Source Severity Equations (T. R. Blackwood and E. C. Eimutis)	134
E. Data Used to Calculate Affected Population	147
F. Calculation of Emission Factors Based on MRC Sampling Data	149
G. Asphalt Hot Mix Dryer Drum Industry	153
H. Statement of the National Asphalt Pavement Association	160
Glossary	165
References	168

FIGURES

Number		Page
1	Asphalt hot mix industry	8
2	Petroleum asphalt flow chart	11
3	Liquid asphaltic products	13
4	Aggregate gradation chart showing specification limits and the job-mix formula	18
5	Asphalt hot mix batch plant	20
6	Block flow diagram of batch process for asphalt hot mix	22
7	Section through a rotary dryer	27
8	Block flow diagram of asphalt hot mix - continuous process	31
9	Block flow diagram of asphalt hot mix - dryer drum process	33
10	Material balance for asphalt hot mix - batch process	35
11	State distribution of asphalt hot mix plants	36
12	Asphalt hot mix emission rate	48
13	Asphalt hot mix source severity	60
14	Asphalt hot mix industry particulate emissions	62
15	Historical and extrapolated emission factors	64
16	Relative particle size and collection efficiency of control equipment	71
17	Variation of collection efficiency with particle size	71
18	Settling chamber	72
19	Centrifugal dry collector	75
20	Multicyclone	76
21	Collector element	76

FIGURES (Continued)

Number		Page
22	Gravity spray tower	79
23	Cyclonic spray scrubber	79
24	Centrifugal fan wet scrubber	81
25	Sectional view of venturi scrubber	82
26	Venturi scrubber	83
27	Orifice scrubber	84
28	Low energy-type baghouse	86
29	High energy-type baghouse	87
30	Asphalt hot mix production, 1965-1985	90
31	Asphalt hot mix, average price	91

TABLES

Number		Page
1	Typical Uses of Asphalt	14
2	Typical Paving Mixes	17
3	Air Requirements and Exhaust Gas Volumes for Various Fuels	23
4a	Balance Between Air Flow and Available Heat Using 120°C Exhaust Temperature at Fan	25 25
4b	Balance Between Air Flow and Available Heat Using 175°C Exhaust Temperature at Fan	26 26
5	Existing Asphalt Hot Mix Plants in the U.S. and State Distribution (January 1974)	37
6	Concentration of Material Emitted from Stack	41
7	Concentration of Material Emitted from Mixer	42
8	Fugitive Emissions from an Asphalt Hot Mix Plant	43
9	Particulate Emission Factors for Control Equipment Used in an Asphalt Hot Mix Plant	46
10	Asphalt Hot Mix Industry Survey - Particulate Emission Rate	47
11	Emission Factors for Selected Materials Emitted from Stack	50
12	Emission Factors for Polycyclic Organic Material Emitted from Stack	51
13	Emission Factors for Aldehydes Emitted from Stack	51
14	Emission Factors for Material Emitted from the Mixer	52
15	Summary of Data for a Representative Asphalt Hot Mix Plant	53
16	Summary of Data for a Typical Existing Asphalt Hot Mix Plant That Was Selected for Sampling as a Representative Plant	53

TABLES (Continued)

Number		Page
17	Source Severity of Emissions from the Stack	56
18	Source Severity of Polycyclic Organic Material Emitted from Stack	57
19	Source Severity of Aldehydes Emitted from the Stack	58
20	Source Severity of Emissions from the Mixer	58
21	Asphalt Hot Mix Industry Survey - Particulate Source Severity	59
22	Particulate Emission Factor Trends for Asphalt Hot Mix Industry	63
23	Contribution of Asphalt Hot Mix Industry to State Particulate Emissions	65
24	Contribution of Asphalt Hot Mix Industry to National Emissions of Criteria Pollutants	67
25	Affected Area and Affected Population for Source Severity Greater than or Equal to 1.0	68
26	Particle Size Distribution Before and After Primary Collection	69
27	Primary and Secondary Control Devices Used in the Asphalt Hot Mix Industry	70
28	Asphalt Hot Mix - Markets	92
29	Asphalt Hot Mix by Type of Construction	92
30	Asphalt Hot Mix by End Uses	92
A-1	Summary of Asphalt Hot Mix Industry Survey Data	96
B-1	POM Analysis Data, Inlet Run No. 1	98
B-2	POM Analysis Data, Inlet Run No. 2	98
B-3	POM Analysis Data, Mixer Duct Run No. 1	99
B-4	POM Analysis Data, Mixer Duct Run No. 2	99
B-5	POM Analysis Data, Mixer Duct Run No. 3	100
B-6	POM Analysis Data, Outlet Run No. 1	100
B-7	POM Analysis Data, Outlet Run No. 2	101
B-8	POM Analysis Data, Outlet Run No. 3	101
B-9	POM Sampling Input Data for Run 1I	102

TABLES (Continued)

Number		Page
B-10	POM Sampling Input Data for Run 2I	103
B-11	POM Sampling Input Data for Run 1M	104
B-12	POM Sampling Input Data for Run 2M	105
B-13	POM Sampling Input Data for Run 3M	106
B-14	POM Sampling Input Data for Run 1O	107
B-15	POM Sampling Input Data for Run 2O	108
B-16	POM Sampling Input Data for Run 3O	109
B-17a	POM Sampling Data Summary (metric units)	110
B-17b	POM Sampling Data Summary (English units)	110
B-18a	POM Sampling Data Summary (metric units)	111
B-18b	POM Sampling Data Summary (English units)	111
B-19	Mixer Duct POM Emission Rate	112
B-20	Outlet POM Emission Rate	112
B-21	Inlet POM Emission Rate	112
B-22	Aldehyde Concentration in Impinger Liquor	112
B-23	Aldehydes Detected in Samples Collected at Outlet	113 113
B-24	Total Hydrocarbon and Carbon Monoxide Analysis	113
C-1	Raw Data (Asphalt Survey Calculations - Primary Collectors Only)	114
C-2	Raw Data (Asphalt Survey Calculations - Primary and Secondary Collectors)	122
C-3	Emission Rate for Primary Collectors (Uncontrolled Emissions)	130
C-4	Emission Rate for Primary and Secondary Collectors (Controlled Emissions)	131
C-5	Severity for Primary Collectors (Uncontrolled Emissions)	132
C-6	Severity for Primary and Secondary Collectors (Controlled Emissions)	133
D-1	Pollutant Severity Equations for Elevated Sources	134
D-2	Values of a for the Computation of σ_y	136

TABLES (Continued)

Number		Page
D-3	Values of the Constants Used to Estimate Vertical Dispersion	137
D-4	Summary of National Ambient Air Quality Standards	141
G-1	Summary of Dryer Drum Asphalt Hot Mix Industry Survey Data	154
G-2	Dryer Drum Asphalt Plants--Control Equipment and Operating Conditions	156
G-3	Efficiency of Dryer Drum Pollution Control Equipment	157
G-4	Source Severity for Particulate Emissions from Dryer Drum Asphalt Plants	158
G-5	Contribution to National Emissions (1975)	159

ABBREVIATIONS AND SYMBOLS

A	Area containing the affected population
AAQS	Ambient air quality standard
a,b,c,d,f	Coefficients in Equation D-2 and D-3
A_R	Factor defined as $Q/ac\pi u$
AS	Stack area
B_R	Factor defined as $-H^2/2c^2$
CAN	Front particulate (g/dry normal m^3)
CAO	Total particulate (g/dry normal m^3)
CAT	Front particulate (g/actual m^3)
CAU	Total particulate (g/actual m^3)
CAW	Front particulate (kg/hr)
CAX	Total particulate (kg/hr)
CO	Percent CO
CO2	Percent CO_2
CP	Pitot coefficient
DELH	Average orifice pressure drop
DELP	Average stack velocity head
DN	Probe tip diameter
D_P	Affected population density
DS	Stack diameter
dscf	Dry standard cubic feet
dscm	Dry standard cubic meter
exp	Natural logarithm base (e = 2.72)
F	Primary ambient air quality standard for criteria pollutants; corrected TLV (i.e., TLV·8/24·1/100) for noncriteria pollutants

ABBREVIATIONS AND SYMBOLS (Continued)

H	Effective emission height
MC	Medium curing
MD	Mole fraction of dry gas
MF	Front particulate (mg)
MT	Total particulate (mg)
MW	Molecular weight of stack gas
MWD	Molecular weight of dry gas
N2	Percent N_2
O2	Percent O_2
P	Total affected population
PB	Barometric pressure
PCNTM	Volumetric percent moisture
PCTI	Percent isokinetic
PM	Stack static pressure
POM	Polycyclic organic material
ppm	Parts per million
PS	Stack absolute pressure
Q	Mass emission rate
QA	Stack flow rate at actual conditions
QS	Stack flow rate at dry standard conditions
RC	Rapid curing
S	Source severity
SC	Slow curing
t	Averaging time
TLV	Threshold limit value
TM1	Average gas meter temperature
TM2	Average gas meter temperature
TS	Stack temperature
TT	Time duration of run
t_0	Short-term averaging time
u	Wind speed

ABBREVIATIONS AND SYMBOLS (Continued)

$\bar{u}$	Average wind speed
VM	Volume of dry gas at meter conditions
VMSTD	Volume of dry gas at standard conditions
VS	Average stack gas velocity
VW	Total H_2O collected
VWG	Volume water vapor at standard conditions
x	Downwind dispersion distance from source of emission release
y	Horizontal distance from centerline of dispersion
π	3.14
σ_y	Standard deviation of horizontal dispersion
σ_z	Standard deviation of vertical dispersion
χ	Ground level concentration of pollutant
χ_{max}	Maximum ground level concentration of pollutant
$\bar{\chi}_{max}$	Time average maximum ground level concentration of pollutant

CONVERSION FACTORS AND METRIC PREFIXES[a]

CONVERSION FACTORS

To convert from	To	Multiply by
degree Celsius (C°)	degree Fahrenheit	$t_F^\circ = 1.8\ t_C^\circ + 32$
gram (g)	pound-mass (lb mass avoirdupois)	2.205×10^{-3}
joule (J)	British thermal unit	9.479×10^{-4}
kilogram (kg)	pound-mass	2.205
kilometer (km)	mile	6.214×10^{-1}
kilometer^2 (km^2)	mile^2	3.860×10^{-1}
meter (m)	foot	3.281
meter^3 (m^3)	foot^3	3.531×10^{1}
meter^3 (m^3)	gallon (U.S. liquid)	2.642×10^{2}
meter^3 (m^3)	liter	1.000×10^{3}
metric ton	pound-mass	2.205×10^{3}
metric ton	ton (short, 2,000 lb mass)	1.102
pascal (Pa)	inch of water (60°F)	4.019×10^{-3}
second	minute	1.667×10^{-3}
tons	pound-mass	2.000×10^{3}

METRIC PREFIXES

Prefix	Symbol	Multiplication factor	Example
kilo	k	10^3	1 kJ = 1×10^3 joules
milli	m	10^{-3}	1 mg = 1×10^{-3} gram
micro	μ	10^{-6}	1 μm = 1×10^{-6} meter
nano	n	10^{-9}	1 ng = 1×10^{-9} gram

[a] Metric Practice Guide. American Society for Testing and Materials. Philadelphia. ASTM Designation: E 380-74. November 1974. 34 p.

SECTION 1

INTRODUCTION

The asphalt hot mix industry is economically among the leading U.S. industries. Asphalt hot mix is produced by one of three processes: batch, continuous, or dryer drum process. In the batch and continuous processes, aggregate is dried, then mixed with hot asphalt cement. In the dryer drum process, aggregate is dried and mixed with hot asphalt cement simultaneously. Emissions from an asphalt hot mix plant include particulate, nitrogen dioxide, sulfur oxides, carbon monoxide, hydrocarbons, aldehydes, hydrogen sulfide, ozone, polycyclic organic material, and trace metals.

This document presents a detailed study of the asphalt hot mix industry from an environmental standpoint. It defines a representative asphalt hot mix plant, presents the emission factors determined for all species emitted to the atmosphere, and identifies emission points and heights of emission using the best available control technology for the representative plant. These data are then used to calculate source severity, industry contribution to state and national emissions, and affected population. These criteria are used to assess the environmental hazard potential of the asphalt hot mix industry.

SECTION 2

SUMMARY

The term asphalt hot mix defines a mixture of properly graded aggregate, hot and dry, and asphalt cement in a molten state. Asphalt hot mix is used for surfacing roads, airport runways, parking lots and driveways. It has other, smaller uses such as liners in sanitary landfills, extruded curbs, and impoundment liners. Over the past 5 years, highway and street paving has accounted for 67% of the market, commercial paving for 28%, and airport and private paving for the remainder.

The asphalt hot mix industry is economically a U.S. industrial leader. In 1975, an estimated 4,300 plants produced 2.99×10^8 metric tons[a] (3.29×10^8 tons) of hot mix. Asphalt hot mix is produced by one of three major processes: batch process, continuous process, and dryer drum process, which account for 90.8%, 6.6%, and 2.6% of the total production, respectively.

Asphalt hot mix is produced by mixing hot, dry aggregate with hot liquid asphalt cement in the batch and continuous processes. In the dryer drum process, wet aggregate is

[a] 1 metric ton = 10^6 grams = 2,205 pounds = 1.1 short tons (short tons are designated "tons" in this document); other conversion factors and metric system prefixes are presented in the prefatory pages.

dried and mixed with hot liquid asphalt cement simultaneously in the dryer.

The production of asphalt hot mix results in the emission of particulate, sulfur oxides, nitrogen oxides, carbon monoxide, hydrocarbons, aldehydes, polycyclic organic material, hydrogen sulfide, and trace metals. The two major points of emission within an asphalt plant are the stack and the mixer. Other emission sources include fugitive emissions (from transfer points, handling and storage of asphalt, oil coated truck beds, the settling pond and miscellaneous points) and open source emissions (from aggregate stockpiles, loading operations, cold storage bins, cold aggregate conveyor and truck traffic within the plant).

To assess the severity of emissions from the asphalt hot mix industry, a representative plant was defined from the results of an industrial survey as a stationary plant using the batch process and having the following mean values for various plant parameters:

Average production rate..... 160 metric tons (176.4 tons/hr)
Average mixer capacity..... 2.9 metric tons (3.2 tons)
Average stack height..... 10.3 m (33.8 ft)
Average particulate emission rate..... 21.9 kg/hr (48.3 lb/hr)
Average hours of operation... 666 hrs/yr
Primary collector..... Cyclone
Secondary collector..... Wet scrubber
Fuel for dryer burner..... Oil
Release agent..... Fuel oil

The impact of the asphalt hot mix industry on the environment was assessed by the calculation of source severity; by the determination of growth factor, of state burdens for

particulate emissions, and of the national burden for criteria pollutants; and by estimation of the population affected by pollutants having a source severity greater than or equal to one.

Source severity is defined as the maximum time-averaged ground level concentration divided by a hazard potential. The maximum time-averaged ground level concentration is determined by using Gaussian plume methodology. The hazard potential for criteria pollutants is defined as the primary ambient air quality standard; for noncriteria pollutants it is defined as a reduced threshold limit value (TLV®). For a representative asphalt hot mix plant, source severities for particulate, nitrogen oxides, sulfur oxides, hydrocarbons and carbon monoxide are 4.02, 1.83, 0.67, 0.96 and 0.01, respectively. Source severities for polycyclic organic material (with a TLV of 2×10^{-4} g/m^3) and aldehydes (with a TLV of 0.18 g/m^3) are 0.14 and 0.13, respectively.

The growth factor is determined from the ratio of known emissions in 1973 to projected emissions in 1978. Asphalt hot mix production in 1973 amounted to 3.31×10^8 metric tons (3.64×10^8 tons), and 1.23×10^5 metric tons (1.35×10^5 tons) of particulate were emitted to the atmosphere. In 1975, production decreased to 2.99×10^8 metric tons (3.29×10^8 tons), and particulate emissions were reduced to 6.3×10^4 metric tons (6.95×10^4 tons). By predicting a 4% increase in production and emissions from 1975 through 1978, production would increase to 3.37×10^8 metric tons (3.71×10^8 tons), whereas emissions would increase to 7.09×10^4 metric tons (7.81×10^4 tons) assuming the worst-case condition. By plotting the decline in emission factor since 1970 through 1975 and extrapolating to 1978, the emission factor for 1978 was estimated to be 0.145 g/kg. Using this best-case approach, the total emissions for 1978 were estimated to

be 4.90×10^4 metric tons (5.40×10^4 tons). Therefore, the particulate emission growth factor should range between 0.40 and 0.58, and the decrease in particulate emissions from asphalt hot mix manufacture will be in the range of 42% to 60% over that period.

Particulate emissions from asphalt hot mix plants comprise from 1.0% to 3.5% of each state's total particulate emissions in Alaska, Connecticut, Missouri, New Hampshire, New Jersey, New York, Oklahoma, Rhode Island, and Vermont. For all other states particulate emissions are less than 1% of the state totals.

The total mass of criteria pollutants emitted nationwide by asphalt plants is estimated to be 6.30×10^4 metric tons/yr (6.95×10^4 tons/yr) particulate, 1.37×10^4 metric tons/yr (1.51×10^4 tons/yr) sulfur oxides, 7.7×10^3 metric tons/yr (8.5×10^3 tons/yr) nitrogen oxides, 6.0×10^3 metric tons/yr (9.0×10^3 tons/yr) total hydrocarbons and 8.2×10^3 metric tons/yr (6.6×10^3 tons/yr) carbon monoxide. The percent contribution to national emissions for particulate, sulfur oxides, nitrogen oxides, total hydrocarbons and carbon monoxide are 0.35%, 0.05%, 0.03%, 0.024% and 0.009%, respectively.

Asphalt hot mix plants, though concentrated in populated areas, are also located in rural areas and even in desert areas. The population density of the county within which the representative plant was located, 379.5 persons/km^2 (983 persons/mi^2), was used as the representative population density. The areas surrounding the representative plant for which the source severities for particulate and nitrogen oxides are greater than or equal to 1.0 were calculated to be 0.453 km^2 (1.17 mi^2) and 0.108 km^2 (0.28 mi^2), respectively. The affected populations are thus 180 persons and 43 persons

for particulate and nitrogen oxide emissions, respectively, for the representative plant.

Pollution control technology within the asphalt plant consists of two stages - primary and secondary control equipment. Primary collectors are designed to recover dust greater than 10 μm with approximately 70% efficiency. They prevent dust nuisance, protect downstream equipment from wear due to the impact of dust particles, and are considered a sound investment since the recovered aggregate can be recycled. Primary collectors used include settling or expansion chambers, centrifugal dry collectors, and multicyclones. Secondary collectors have a higher collection efficiency than primary collectors and are able to remove particles in the micron and submicron sizes. Secondary collectors are of two types - wet and dry. Wet collectors include gravity spray towers, cyclone scrubbers, venturi scrubbers, and orifice scrubbers. Dry collectors include fabric filters or baghouses.

SECTION 3

SOURCE DESCRIPTION

The asphalt hot mix industry is economically among the leading U.S. industries.[1] The estimated 4,300 plants[2] operating in the U.S. in 1975 produced 2.99 x 10^8 metric tons (3.29 x 10^8 tons) of hot mix asphalt.[3]

Asphalt hot mix is produced by one of three major processes: batch process (which accounts for 90.8% of capacity), continuous process (6.6%) and dryer drum process (2.6%). Figure 1 shows the breakdown of the asphalt industry based on process type, plant mobility, fuel type and emission control device used. Asphalt hot mix production consists of mixing a combination of aggregates with liquid asphalt.[4] The asphalt plant is used to heat, mix and combine the aggregate and asphalt in measured quantities to produce the required paving mix.[4]

---

[1]Laster, L. L. Atmospheric Emissions from the Asphalt Industry. U.S. Environmental Protection Agency, Office of Research and Development. Research Triangle Park. Report No. EPA-650/2-73-046 (PB 227 372). December 1973. 36 p.

[2]Private correspondence. Fred Kloiber, National Asphalt Pavement Association, to Monsanto Research Corporation. October 7, 1975.

[3]Hot Mix Asphalt - Plant and Production Facts, 1973-74. National Asphalt Pavement Association. Riverdale. Information Series 56. 31 p.

[4]Air Pollution Engineering Manual, Second Edition. Danielson, J. A. (ed.). U.S. Environmental Protection Agency. Research Triangle Park. Publication No. AP-40. May 1973. 987 p.

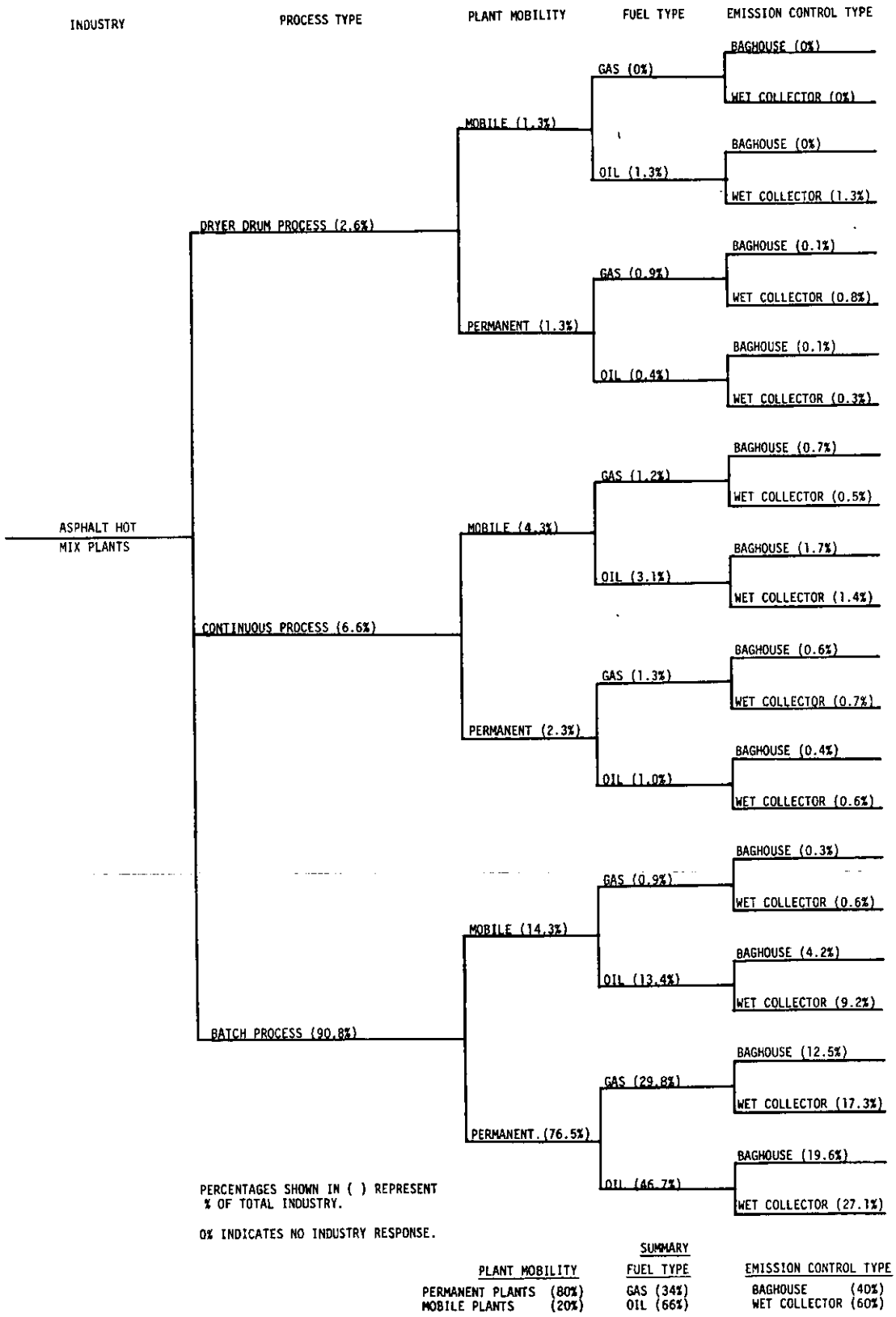

Figure 1. Asphalt hot mix industry

The batch process for producing asphalt hot mix is described in detail in this document. The other two processes are briefly considered from the standpoint of their variations from the batch process.

A. PROCESS DESCRIPTION

1. Raw Material

a. Asphalt - Asphalt is a dark brown to black cementitious material composed principally of bitumens which come from natural or petroleum sources.[5,6]

Chemically, asphalt is a hydrocarbon consisting of three phases: asphaltenes, resins and oils. Asphaltenes are small particles surrounded by a resin coating. The oil serves as a medium in which the asphaltene resin can exist. The three phases affect the properties of asphalt independently: asphaltenes contribute to body; resins furnish the adhesive and ductile properties; and oil influences the viscosity and flow characteristics of the asphalt.[7]

The use of petroleum asphalt has grown steadily and currently 90% of all asphalt used in the U.S. is recovered from crude oil.[6]

---

[5]Asphalt as a Material. The Asphalt Institute. College Park. Information Series No. 93 (IS-93). Revised June 1973. 16 p.

[6]Jones, H. R. Pollution Control in the Petroleum Industry. Pollution Technology Review No. 4. Park Ridge, Noyes Data Corporation, 1973. 349 p.

[7]Larson, T. D. Portland Cement and Asphalt Concretes. New York, McGraw-Hill Book Company, Inc., 1963. 282 p.

Figure 2 is a flow chart for petroleum asphalt and the types of products produced by refining crude petroleum.[5,7-10] Crude petroleum is distilled in a fractionating tower. The volatile components vaporize and are removed for further refining into naphtha, gasoline, kerosene and various other petroleum products.[5-7] The residue called "topped crude" is processed further into one of several standard grades of asphalt.[5]

Asphalt cement is produced commercially by two methods: partial vacuum distillation or solvent extraction.[5,6] Asphalt cements upgrade aggregates of substandard quality, making them suitable for base courses in pavement structures. Such cements are used in asphalt concrete and many other hot mix pavements, and in surface treatment and penetration macadam courses.[5]

Asphalt cement is a highly viscous material available in many standard grades. Penetration tests were originally used to specify grades, but more recently viscosity is used to specify the desired grades.[5,8,9] Specifications for viscosity graded asphalt cement are based on viscosity ranges at 60°C (140°F). A minimum viscosity at 135°C (275°F) is also specified. These temperatures were chosen because 60°C (140°F) approximates the maximum temperature of asphalt pavement surfaces in the United States while 135°C (275°F) approximates mixing and laydown temperatures for hot asphalt pavements.[5,8,9]

---

[8]A Brief Introduction to Asphalt and Some of Its Uses, Seventh Edition. Manual Series No. 5 (MS-5). College Park, The Asphalt Institute, September 1974. 74 p.

[9]Specifications for Paving and Industrial Asphalts, 1974-1975 Edition. Specification Series No. 2 (SS-2). College Park, The Asphalt Institute, issued September 1974. 50 p.

[10]The Asphalt Handbook. Manual Series No. 4 (MS-4). College Park, The Asphalt Institute, March 1966. p. 129-134.

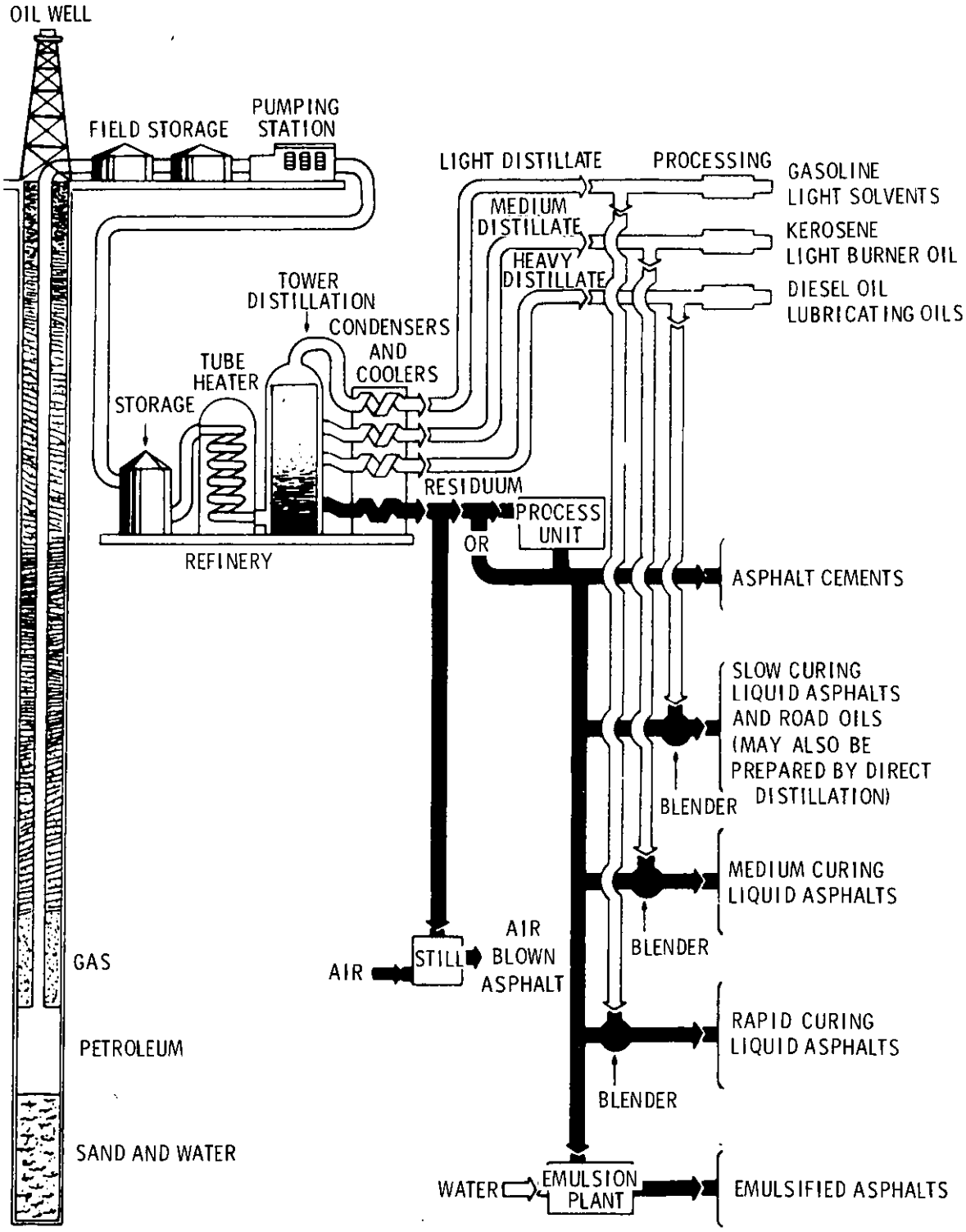

Figure 2. Petroleum asphalt flow chart[5,7-10]

Other test methods used in specifications for asphalt cements include the penetration test, flash point, thin film oven test, ductility test and solubility test.[5,7-10]

Rapid-curing (RC) and medium-curing (MC) cutback asphalts are blends of asphalt cement and light petroleum fractions, called diluents.[5,7,8,10] Low boiling diluents, boiling in the range of naphtha or gasoline, are used to prepare rapid-curing liquid asphalts. Medium-curing liquid asphalts are prepared by using diluents such as kerosene. Slow-curing liquid asphalts are prepared by blending asphalt cement with an oily diluent.[5,7,8,10]

Emulsified asphalts are dispersions of colloidal size globules of asphalt in water that are prepared using high speed mixers or colloid mills. Small quantities of surface active agents or emulsifiers are added to the asphalt to aid dispersion. Anionic and cationic emulsified asphalts are two commercially available asphalt emulsions.[5,7-10]

A modified asphalt emulsion called inverted emulsion, indicating that water is dispersed in the asphalt phase rather than asphalt in the water phase, may be produced using rapid-curing, medium-curing or slow-curing liquid asphalts.[5,7,8,10] Types of liquid asphaltic products are illustrated in Figure 3, and Table 1 lists typical uses of the different asphalt cements and liquid asphalts.[8,10]

b. Aggregate - Asphalt paving mixes are produced by combining mineral aggregates and asphalt cement. Aggregates constitute over 90% of the hot mix.[6,7] Mix characteristics, aside from the amount and grade of asphalt used, are

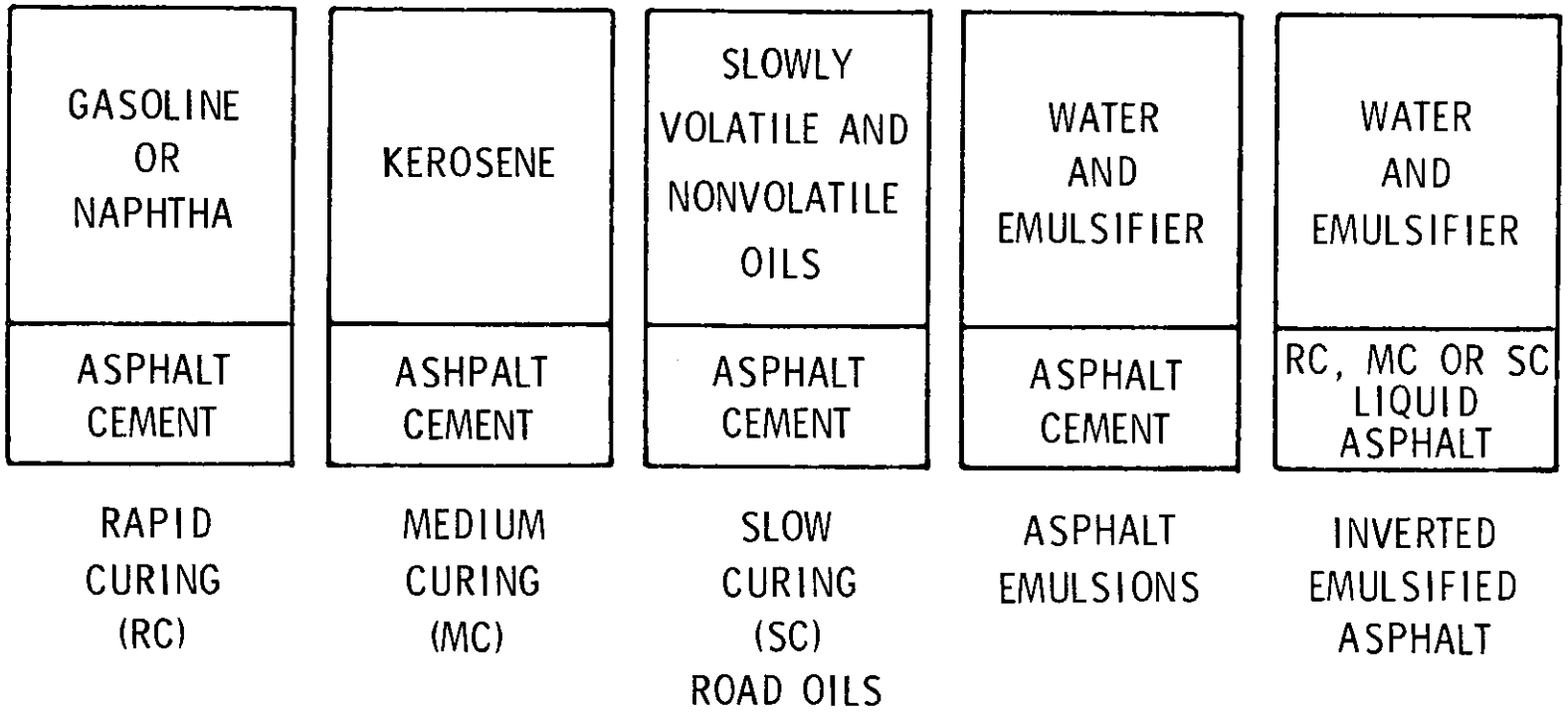

NOTE: DIAGRAMS ARE NOT PROPORTIONAL TO COMPOSITION

Figure 3. Liquid asphaltic products[8,10]

Table 1. TYPICAL USES OF ASPHALT[8]

TYPE OF CONSTRUCTION	ASPHALT CEMENTS														
	VISCOSITY GRADED -ORIGINAL					VISCOSITY GRADED -RESIDUE					PENETRATION GRADED				
	AC-40	AC-20	AC-10	AC-5	AC-2.5	AR-160	AR-80	AR-40	AR-20	AR-10	40-50	60-70	85-100	120-150	200-300
ASPHALT-AGGREGATE MIXTURES															
ASPHALT CONCRETE AND HOT LAID PLANT MIX															
PAVEMENT BASE AND SURFACES															
HIGHWAYS		X	X	X	X[a]	X	X	X	X[b]	X[a]		X	X	X	X[a]
AIRPORTS		X	X				X	X				X	X		
PARKING AREAS		X	X			X	X	X				X	X		
DRIVEWAYS		X	X				X	X				X	X		
CURBS	X	X	X			X	X				X	X	X		
INDUSTRIAL FLOORS	X	X				X	X				X	X			
BLOCKS	X										X				
GROINS	X	X									X	X			
DAM FACINGS	X	X									X	X			
CANAL AND RESERVOIR LININGS	X	X									X	X			
COLD-LAID PLANT MIX															
PAVEMENT BASE AND SURFACES															
OPEN-GRADED AGGREGATE															
WELL-GRADED AGGREGATE															
PATCHING, IMMEDIATE USE															
PATCHING, STOCKPILE															
MIXED-IN-PLACE (ROAD MIX)															
PAVEMENT BASE AND SURFACES															
OPEN-GRADED AGGREGATE															
WELL-GRADED AGGREGATE															
SAND				X	X									X	X
SANDY SOIL				X	X									X	X
PATCHING, IMMEDIATE USE															
PATCHING, STOCKPILE															
ASPHALT-AGGREGATE APPLICATIONS															
SURFACE TREATMENTS															
SINGLE SURFACE TREATMENT				X	X									X	X
MULTIPLE SURFACE TREATMENT				X	X									X	X
AGGREGATE SEAL				X	X				X					X	X
SAND SEAL															
SLURRY SEAL															
PENETRATION MACADAM															
PAVEMENT BASES															
LARGE VOIDS			X										X		
SMALL VOIDS				X										X	
ASPHALT APPLICATIONS															
SURFACE TREATMENT															
FOG SEAL															
PRIME COAT, OPEN SURFACES															
PRIME COAT, TIGHT SURFACES															
TACK COAT															
DUST LAYING															
MULCH															
MEMBRANE															
CANAL AND RESERVOIR LININGS	X										X				
EMBANKMENT ENVELOPES	X	X									X	X			
CRACK FILLING															
ASPHALT PAVEMENTS															
PORTLAND CEMENT CONCRETE PAVEMENTS	X[e]										X[e]				

[a] For use in cold climates.

[b] For use in bases only in cold climates.

[e] Rubber asphalt compounds.

Table 1 (continued). TYPICAL USES OF ASPHALT[8]

TYPE OF CONSTRUCTION	LIQUID ASPHALTS																											
	RAPID CURING (RC)				MEDIUM CURING (MC)					SLOW CURING (SC)				EMULSIFIED														
														ANIONIC							CATIONIC							
	70	250	800	3000	30	70	250	800	3000	70	250	800	3000	RS-1	RS-2	MS-1	MS-2	MS-2h	SS-1	SS-1h	CRS-1	CRS-2	CMS-2	CMS-2h	CSS-1	CSS-1h
ASPHALT-AGGREGATE MIXTURES																												
ASPHALT CONCRETE AND HOT LAID PLANT MIX																												
PAVEMENT BASE AND SURFACES																												
HIGHWAYS																												
AIRPORTS																												
PARKING AREAS																												
DRIVEWAYS																												
CURBS																												
INDUSTRIAL FLOORS																												
BLOCKS																												
GROINS																												
DAM FACINGS																												
CANAL AND RESERVOIR LININGS																												
COLD-LAID PLANT MIX																												
PAVEMENT BASE AND SURFACES																												
OPEN-GRADED AGGREGATE								X								X	X	X					X	X				
WELL-GRADED AGGREGATE		X					X	X	X		X	X	X						X	X			X		X	X
PATCHING, IMMEDIATE USE		X	X				X	X	X			X	X						X	X					X	X
PATCHING, STOCKPILE							X	X			X	X																
MIXED-IN-PLACE (ROAD MIX)																												
PAVEMENT BASE AND SURFACES																												
OPEN-GRADED AGGREGATE		X	X	X				X	X		X	X				X	X	X					X	X				
WELL-GRADED AGGREGATE		X					X	X			X	X							X	X			X		X	X
SAND		X	X			X	X	X											X	X					X	X
SANDY SOIL	X	X	X				X	X											X	X			X		X	X
PATCHING, IMMEDIATE USE		X	X				X	X	X			X	X						X	X					X	X
PATCHING, STOCKPILE							X	X			X	X																
ASPHALT-AGGREGATE APPLICATIONS																												
SURFACE TREATMENTS																												
SINGLE SURFACE TREATMENT		X	X	X				X	X					X	X						X	X						
MULTIPLE SURFACE TREATMENT		X	X	X					X					X	X						X	X						
AGGREGATE SEAL		X	X	X				X	X					X	X						X	X						
SAND SEAL		X					X	X						X	X						X	X						
SLURRY SEAL																			X	X					X	X
PENETRATION MACADAM																												
PAVEMENT BASES																												
LARGE VOIDS			X	X										X	X						X	X						
SMALL VOIDS		X												X	X						X	X						
ASPHALT APPLICATIONS																												
SURFACE TREATMENT																												
FOG SEAL																			X[c]	X[c]					X[c]	X[c]
PRIME COAT, OPEN SURFACES	X	X				X	X																					
PRIME COAT, TIGHT SURFACES	X				X	X													X									
TACK COAT	X													X					X[c]	X[c]	X				X[c]	X[c]
DUST LAYING						X													X[c]	X[c]					X[c]	X[c]
MULCH																			X[c]	X[c]						
MEMBRANE																												
CANAL AND RESERVOIR LININGS																												
EMBANKMENT ENVELOPES																												
CRACK FILLING																												
ASPHALT PAVEMENTS																			X[d]	X[d]					X[d]	X[d]
PORTLAND CEMENT CONCRETE PAVEMENTS																												

[c]Diluted with water.

[d]Slurry mix.

determined by the relative amounts and types of aggregate used.[1,7,8,10,11]

Aggregate must be clean, hard, tough, strong, durable and properly graded. Tests commonly used to determine aggregate quality include: sieve analysis, sand equivalent test, abrasion (wear) test, soundness test, specific gravity, unit weight and moisture content.[7,8,10]

Aggregate is generally sized into three separate groups: coarse aggregate (material retained on a 2.38-mm [No. 8 mesh] sieve and up to 0.06 m in diameter), fine aggregate (material passing a 2.38-mm [No. 8 mesh] sieve), and mineral dust (material passing through a 74-μm [No. 200 mesh] sieve).[1,12] Coarse aggregate can consist of crushed stone, crushed limestone, crushed gravel, crushed slag from steel mills, crushed glass, oyster shells and material such as decomposed granite (or other material occurring naturally in a fractured condition), or highly angular material with a pitted or rough surface texture. Fine aggregate consists of natural sand with crushed limestone, slag or gravel. Mineral filler or mineral dust consists of crushed rock, limestone, hydrated lime, portland cement or other nonplastic mineral matter. A minimum of 65% of this material must pass through a 74-μm sieve. All aggregate must be free from coatings of clay and silt.[1,4,12,13] Table 2 lists sieve analysis specifications for two typical paving mixes.[1]

---

[11]Crim, J. A., and W. D. Snowden. Asphaltic Concrete Plants Atmospheric Emissions Study. Valentine, Fisher & Tomlinson, EPA Contract 68-02-0076. Seattle. November 1971. 101 p.

[12]Friedrich, H. E. Air Pollution Control Practices. Hot-Mix Asphalt Paving Batch Plants. Journal of the Air Pollution Control Association. 19:924-928, December 1969.

[13]Patankar, U. Inspection Manual for Enforcement of New Performance Standards: Asphalt Concrete Plants. JACA Corp., EPA Contract 68-02-1356, Task 2. Fort Washington. June 1975. 79 p.

Table 2. TYPICAL PAVING MIXES[1]

Paving type	Description	Maximum size aggregate normally used	
		Surface and leveling mixes	Base, binder and leveling mixes
I	Macadam		63.5 mm
II	Open graded	9.5 to 19.1 mm	19.1 to 38.1 mm
III	Coarse graded	12.7 to 19.1 mm	19.1 to 38.1 mm
IV	Dense graded	12.7 to 25.4 mm	25.4 to 38.1 mm
V	Fine graded	12.7 to 19.1 mm	19.1 mm
VI	Stone sheet	12.7 to 19.1 mm	19.1 mm
VII	Sand sheet	9.5 mm	9.5 mm
VIII	Fine sheet	No. 4	No. 4

Generally, a single natural source cannot provide the required gradation; hence, mechanical combination of two or more different aggregates is necessary. Aggregates are also blended because of limited supplies, for economic reasons, and to control particulate emissions.[7,11] Blending techniques used include trial and error, mathematical and graphical blending methods.[1]

State transportation departments are responsible for specifications dictating the percent of each aggregate size in the mix. State and local specifications account for aggregate properties required for a sound mix including local variations in available supplies.[13] A typical aggregate gradation chart showing the specification limits and the job-mix formula is shown in Figure 4.

2. Batch Process

a. Aggregate Storage - Excavation, crushing and screening of the aggregate occur at the gravel pit or quarry. Of the asphalt companies surveyed in 1974, 52% owned a gravel pit

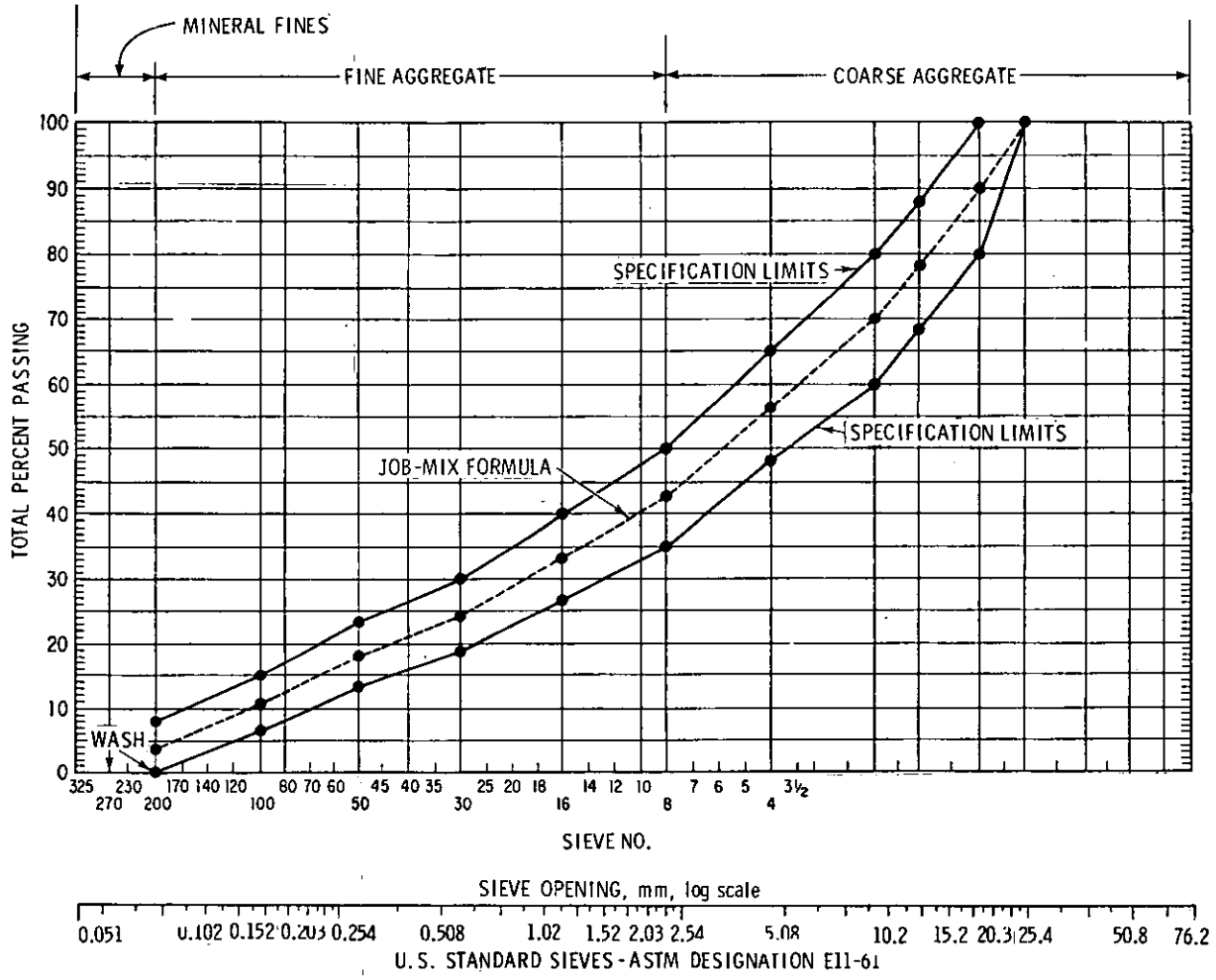

Figure 4. Aggregate gradation chart showing specification limits and the job-mix formula[7]

or quarry.[3] The crushed and screened aggregate is transported to the asphalt plant site by truck or barge and stockpiled according to size as shown in Figure 5[1,4,7,10-17] (A and B). Figure 6 is a block flow diagram of the batch process.[1,4,7,10-17] The moisture content of the stockpiled aggregate is normally between 3% and 5% moisture by weight.[11] Mineral fines are often stored separately (Q). The aggregate is mechanically loaded (from the stockpiles) into storage bins, C, which are equipped with a hopper to discharge the bin contents onto a conveyor, D, feeding the dryer. The aggregate could also be transported directly to the dryer from the stockpiles by an underground tunnel belt fed by special gates.[18]

b. Rotary Dryer and Burner - The cold moist aggregate is fed into the rotary dryer (stream 1), E. The rotary dryer (or kiln) is the most important component of an asphalt hot mix

---

[14]Background Information for Proposed New Source Performance Standards: Asphalt Concrete Plants, Petroleum Refineries, Storage Vessels, Secondary Lead Smelters and Refineries, Brass or Bronze Ingot Production Plants, Iron and Steel Plants, and Sewage Treatment Plants. Volume 1, Main Text. U.S. Environmental Protection Agency, Office of Air and Water Programs. Research Triangle Park. Report No. APTD-1352a (PB 221 736). June 1973. 61 p.

[15]Private correspondence. James F. Denton, Warren Brothers Company, to Monsanto Research Corporation. May 7, 1975.

[16]Asphalt Industry Survey. Monsanto Research Corporation. Dayton. Conducted through the National Asphalt Pavement Association. November 23, 1975. 24 p.

[17]Primary and Secondary Collection Systems for Environmental Control (Proceedings from NAPA's 15th Annual Midyear Meeting, July 30 - August 1, 1971, and the 17th Annual Convention, January 4-14, 1972). National Asphalt Pavement Association. Riverdale. Information Series 38.

[18]Chemical Engineers' Handbook, Fifth Edition. Perry, J. H., and C. H. Chilton (eds.). New York, McGraw-Hill Book Company, 1973.

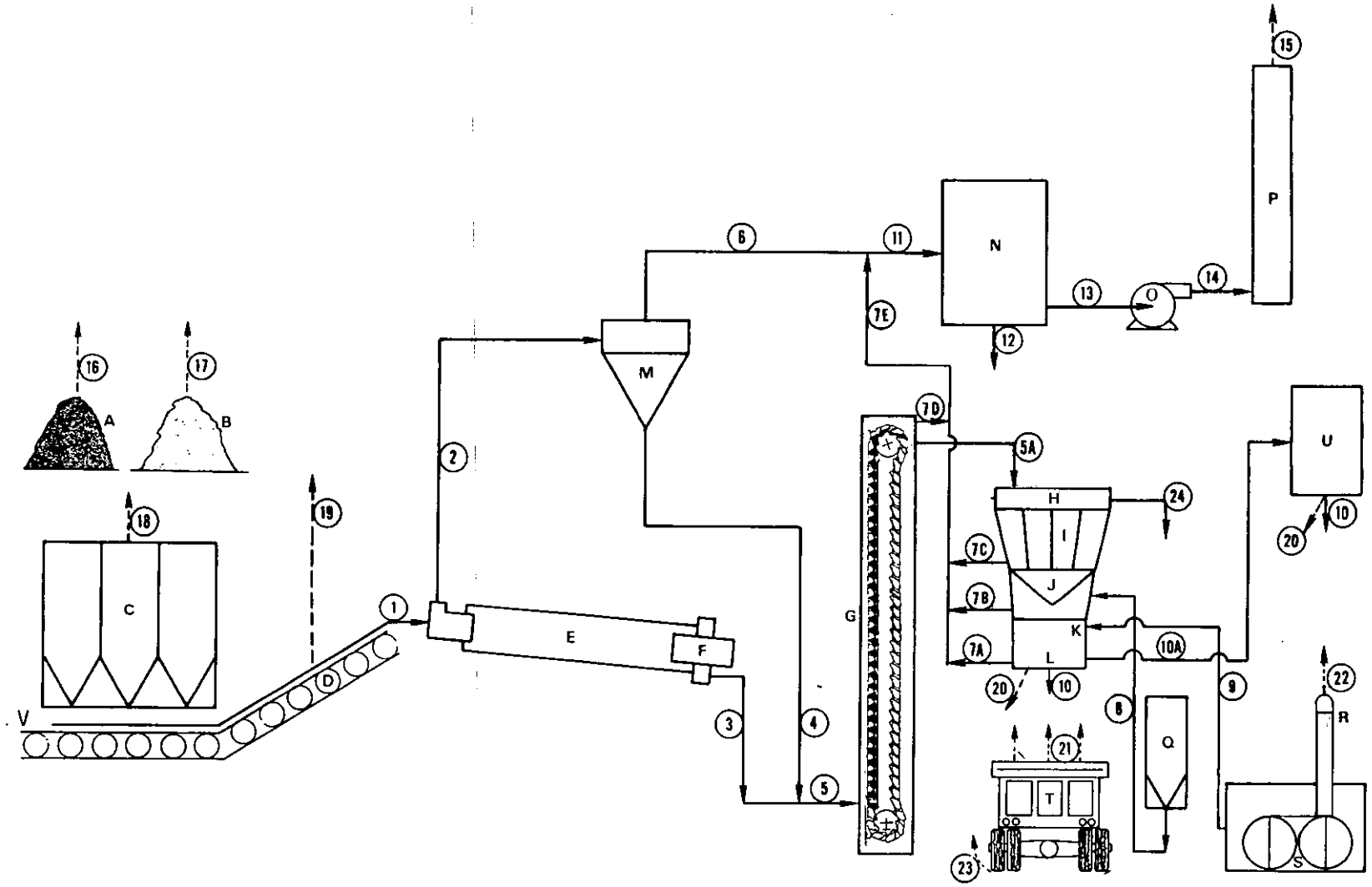

Figure 5. Asphalt hot mix batch plant[1,4,7,10-17] (see legend on following page)

LEGEND FOR FIGURE 5

ITEM

A. COARSE AGGREGATE STORAGE PILE
B. FINE AGGREGATE STORAGE PILE
C. COLD AGGREGATE STORAGE BINS
D. COLD AGGREGATE CONVEYOR
E. ROTARY DRYER
F. FUEL BURNER
G. HOT AGGREGATE ELEVATOR
H. VIBRATING SCREENS
I. HOT AGGREGATE STORAGE BINS
J. WEIGH HOPPER
K. ASPHALT BUCKET
L. MIXER
M. PRIMARY COLLECTOR
N. SECONDARY COLLECTOR
O. DRAFT FAN
P. STACK
Q. MINERAL FINES STORAGE BIN
R. VENT FOR ASPHALT EMISSIONS
S. ASPHALT STORAGE TANKS
T. TRUCK TO TRANSPORT HOT MIX
U. HOT MIX STORAGE FACILITIES
V. FEEDERS

STREAM

1. CONTROLLED COLD AGGREGATE FEED TO ROTARY DRYER
2. EXHAUST GASES FROM DRYER
3. HEATED AGGREGATE TO HOT ELEVATOR
4. DUST FROM PRIMARY COLLECTOR RETURNED TO HEATED AGGREGATE
5. HEATED AGGREGATE TO HOT AGGREGATE ELEVATOR
5a. HOT AGGREGATE TO VIBRATING SCREENS
6. DUST LADEN GASES TO SECONDARY COLLECTOR
7a. EMISSIONS FROM MIXER
7b. EMISSIONS FROM WEIGH HOPPER
7c. EMISSIONS FROM HOT AGGREGATE STORAGE BINS
7d. EMISSIONS FROM HOT AGGREGATE ELEVATOR
7e. EMISSIONS TO SECONDARY COLLECTOR
8. METERED MINERAL FINES TO MIXER
9. HOT ASPHALT TO ASPHALT BUCKET
10. HOT MIX TO TRUCKS
10a. HOT MIX TO STORAGE SILOS
11. DUST LADEN GASES TO SECONDARY COLLECTOR
12. DUST, RECYCLED OR DISCARDED
13. EMISSIONS TO DRAFT FAN
14. EMISSIONS TO STACK
15. EMISSIONS TO ATMOSPHERE
16. PARTICULATE EMITTED FROM COARSE AGGREGATE PILE
17. PARTICULATE EMITTED FROM FINE AGGREGATE PILE
18. PARTICULATE EMITTED FROM COLD AGGREGATE STORAGE BINS
19. PARTICULATE EMITTED FROM COLD AGGREGATE CONVEYOR
20. EMISSIONS FROM MIXER DURING TRUCK LOADING
21. EMISSIONS FROM OIL COATED TRUCK BEDS
22. EMISSIONS FROM HEATED ASPHALT
23. PARTICULATE DUE TO TRUCK TRAFFIC
24. OVERFLOW AND REJECTED AGGREGATE

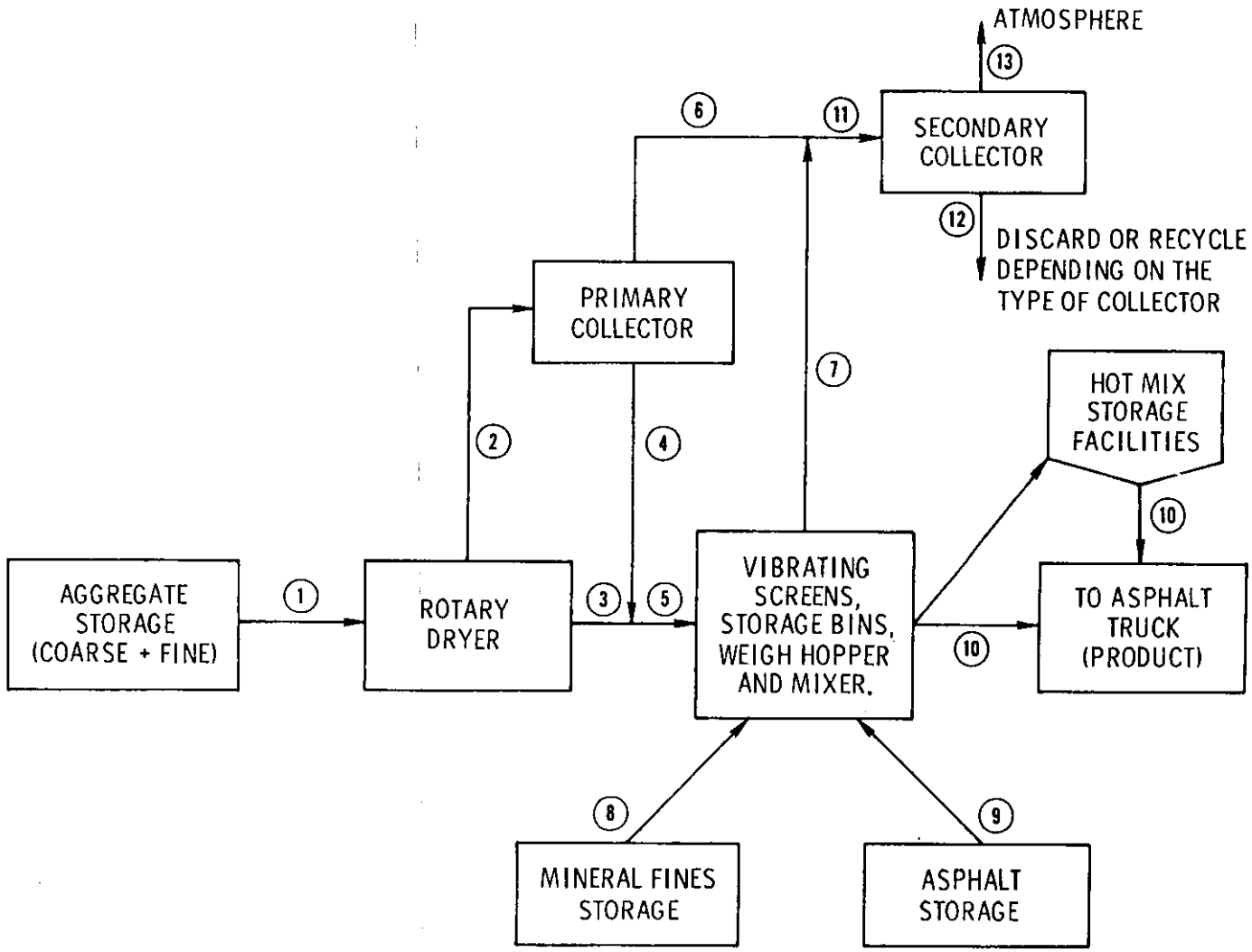

Figure 6. Block flow diagram of batch process for asphalt hot mix[1,4,7,10-13,15-18]

plant.[19,20] Asphalt hot mix plants generally employ direct fired rotary dryers that utilize oil or gas for fuel. A rotary dryer consists of an inclined rotating cylinder. Aggregate is fed at the elevated end and discharged at the lower end. Heated air or combustion gases flow counter-current to the aggregate.[4]

Flames contacting the aggregate are developed with burners, F, located at the lower end of the dryer. Varying amounts of air are required for combustion of different fuels. Table 3 shows typical air volumes needed for various fuels.[20] When air needed for burning is furnished to the burners by the pressure blower, the burner is called a forced draft burner. If an exhaust fan pulls the required air, the burner is called an induced draft burner. Asphalt hot mix plants use hybrid burners in which part of the air (30%) is forced through the burner and the remainder (70%) is induced.[20]

Table 3. AIR REQUIREMENTS AND EXHAUST GAS VOLUMES FOR VARIOUS FUELS[20]

Fuel	kg of Air required per per m^3 of fuel	Standard m^3 of fuel gases per unit of fuel
#2 Fuel oil	1.25×10^4	1.04×10^4
#3 Fuel oil	1.28×10^4	1.07×10^4
#5 Fuel oil	1.32×10^4	1.10×10^4
#6 Fuel oil	1.37×10^4	1.14×10^4
Natural gas (Pennsylvania)	11.53	10.5
Natural gas (Georgia)	12.98	11.7
Natural gas (California)	12.82	11.6
Natural gas (Kansas)	11.21	10.2

[19]Dickson, P. F. Heating and Drying of Aggregate. National Asphalt Pavement Association. Riverdale. May 1971. 50 p.

[20]The Operation of Exhaust Systems in the Hot Mix Plant - Efficiency and Emission Control. National Asphalt Pavement Association. Riverdale. Information Series 52. 1975. 51 p.

The rotary dryer serves two purposes: heating and removing moisture from the aggregate. When fuel is burned, heat is produced and transferred to the aggregate by a combination of radiation, convection and conduction.[19] Removing moisture from the aggregate requires heating particle surfaces above the vaporization temperature. This evaporated water then diffuses back into the gas stream. Additional heat is transferred to within the aggregate particles to raise the temperature high enough to vaporize the internal moisture, which is then diffused back to the gas stream through the aggregate pore structure.[19]

The exhaust fan handles the water vapor (steam) created from the drying process, dust entrained in the gas stream, products of combustion and air. It is the controlling device in the drying operation. Table 4 shows the balance that exists between air flow and heat available for two different exhaust air temperatures and 25% excess air.[20]

A dryer exhaust temperature between 95°C (200°F) and 120°C (250°F) is ideal. Lower temperatures cause aggregate caking and higher temperatures waste fuel. When dryer exhaust temperatures exceed 120°C, flights should be used.[20] Flights lift the aggregate and shower it uniformly across the cross section of the rotary cylinder, exposing as much of the aggregate surface area as possible to the flame.[4,11,12] Figure 7 shows a section through a rotary dryer.

The factors influencing dryer performance include production rate, moisture content of the aggregate, air flow through the dryer, burner capacity, and flight design.[4,20] If the settling velocity (velocity at which a particle will settle in still air) of an aggregate particle within the dryer is less than or equal to the gas velocity through the dryer, the particle will be swept out of the dryer. Therefore,

Table 4a. BALANCE BETWEEN AIR FLOW AND AVAILABLE HEAT USING 120°C EXHAUST TEMPERATURE AT FAN

Exhaust fan, m^3/min	Material moisture, %	Maximum production, metric tons/hr	Maximum kJ/hr	Maximum fuel, m^3/hr	Fuel consumed, m^3/metric ton	Flow rate, m^3/metric ton
850	4.0	238	6.64×10^7	1.72		
1,100	4.0	317	8.85×10^7	2.3		
1,400	4.0	396	1.11×10^8	2.87	0.00725	212
1,700	4.0	476	1.33×10^8	3.44		
2,000	4.0	555	1.55×10^8	4.02		
850	5.0	202	6.35×10^7	1.64		
1,100	5.0	271	8.46×10^7	2.20		
1,400	5.0	338	1.06×10^8	2.74	0.0081	249
1,700	5.0	406	1.27×10^8	3.29		
2,000	5.0	473	1.48×10^8	3.84		
850	6.0	178	6.18×10^7	1.60		
1,100	6.0	238	8.23×10^7	2.14		
1,400	6.0	297	1.03×10^8	2.67	0.009	283
1,700	6.0	356	1.24×10^8	3.21		
2,000	6.0	416	1.44×10^8	3.74		
850	7.0	158	6.01×10^7	1.56		
1,100	7.0	211	8.02×10^7	2.08		
1,400	7.0	263	1.00×10^8	2.60	0.0099	319
1,700	7.0	316	1.20×10^8	3.12		
2,000	7.0	369	1.40×10^8	3.64		
850	8.0	142	5.87×10^7	1.52		
1,100	8.0	184	7.82×10^7	2.03		
1,400	8.0	236	9.78×10^7	2.54	0.0108	356
1,700	8.0	283	1.17×10^8	3.04		
2,000	8.0	331	1.37×10^8	3.55		
850	10.0	118	5.69×10^7	1.48		
1,100	10.0	158	7.59×10^7	1.97		
1,400	10.0	197	9.49×10^7	2.46	0.0125	426
1,700	10.0	236	1.14×10^8	2.95		
2,000	10.0	276	1.33×10^8	3.45		
850	15.0	84	5.45×10^7	1.41		
1,100	15.0	112	7.27×10^7	1.89		
1,400	15.0	140	9.08×10^7	2.35	0.0168	600
1,700	15.0	168	1.09×10^8	2.83		
2,000	15.0	196	1.27×10^8	3.30		

Table 4b. BALANCE BETWEEN AIR FLOW AND AVAILABLE HEAT USING 175°C EXHAUST TEMPERATURE AT FAN

Exhaust fan, m^3/min	Material moisture, %	Maximum production, metric tons/hr	Maximum kJ/hr	Maximum fuel, m^3/hr	Fuel consumed, m^3/metric ton	Flow rate, m^3/metric ton
850	4.0	207	5.78×10^7	1.50		
1,100	4.0	276	7.70×10^7	2.00		
1,400	4.0	345	9.63×10^7	2.50	0.00725	243
1,700	4.0	414	1.16×10^8	3.00		
2,000	4.0	483	1.35×10^8	3.50		
850	5.0	192	5.58×10^7	1.45		
1,100	5.0	238	7.43×10^7	1.93		
1,400	5.0	297	9.29×10^7	2.41	0.0081	283
1,700	5.0	356	1.12×10^8	2.89		
2,000	5.0	416	1.30×10^8	3.38		
850	6.0	156	5.43×10^7	1.41		
1,100	6.0	209	7.24×10^7	1.88		
1,400	6.0	261	9.04×10^7	2.35	0.009	322
1,700	6.0	313	1.09×10^8	2.82		
2,000	6.0	365	1.27×10^8	3.28		
850	7.0	124	5.28×10^7	1.31		
1,100	7.0	185	7.05×10^7	1.83		
1,400	7.0	232	8.81×10^7	2.28	0.00983	362
1,700	7.0	278	1.06×10^8	2.74		
2,000	7.0	324	1.23×10^8	3.20		
850	8.0	124	5.15×10^7	1.33		
1,100	8.0	166	6.86×10^7	1.78		
1,400	8.0	207	8.58×10^7	2.23	0.0108	406
1,700	8.0	249	1.03×10^8	2.67		
2,000	8.0	291	1.20×10^8	3.11		
850	10.0	104	4.99×10^7	1.30		
1,100	10.0	138	6.65×10^7	1.73		
1,400	10.0	173	8.32×10^7	2.16	0.0125	486
1,700	10.0	207	9.98×10^7	2.59		
2,000	10.0	242	1.16×10^8	3.02		
850	15.0	74	4.78×10^7	1.24		
1,100	15.0	98	6.37×10^7	1.65		
1,400	15.0	123	7.97×10^7	2.07	0.0168	683
1,700	15.0	147	9.56×10^7	2.48		
2,000	15.0	172	1.12×10^8	2.89		

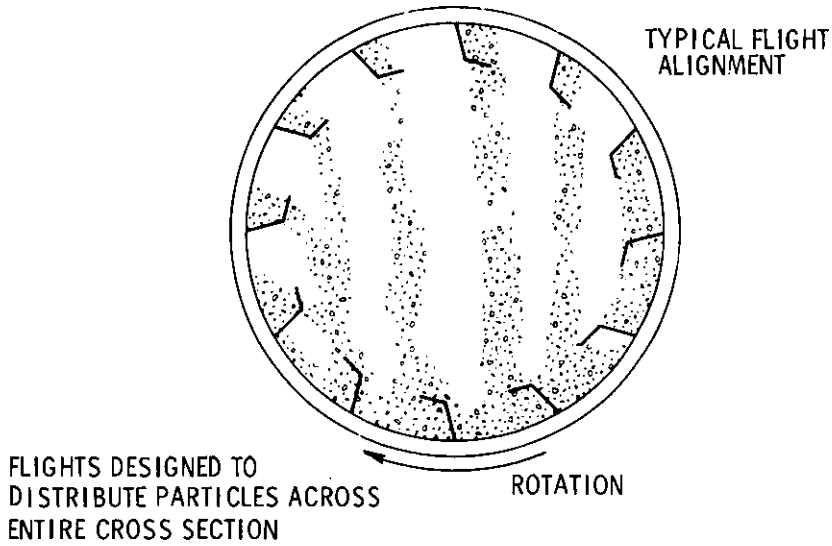

Figure 7. Section through a rotary dryer[4,11,20]

controlling the percent of mineral dust, aggregate that can pass a 74-μm (200-mesh) screen, entering the dryer is important for pollution control. The exhaust gas with entrained dust is vented (stream 2) to the primary control device. The heat and dried aggregate (stream 3) exit the opposite end.

c. Hot Aggregate Elevator, Vibrating Screens, Storage Bins and Weigh Hopper - The hot aggregate from the dryer (stream 3) combined with aggregate recycled from the primary collector (stream 4) is hauled by a bucket elevator (G) to the vibrating screens (H). The screens separate the aggregate into predetermined uniform grades and drop it into one or more (up to five) storage bins (I). Oversized aggregate, aggregate from overfilled bins and mineral fines are rejected (stream 8a).[10-13,21]

---

[21] Background Information for Establishment of National Standards of Performance for New Sources. Asphalt Batch Plants. Environmental Engineering, Inc. Gainesville. EPA Contract CPA 70-142, Task Order No. 2. 15 March 1971..

The hot aggregate bins provide surge capacity for the dryer system. From the storage bins each grade of aggregate is dropped in turn into the weigh hopper (J) until the mix specification is met. At this point a filler or mineral fines may be added to the weigh hopper by means of a separate feed. After all the aggregate is weighed the mixture is dropped into the mixer (L).[10-13,21]

Atmospheric emissions occur from the hot aggregate elevator (stream 7d), storage bins (stream 7c), weigh hopper (stream 7b) and mixer (stream 7a), which are all vented (stream 7e) to the secondary control device (N).

d. Asphalt Storage - Asphalt used for preparing the hot mix is transported from the refineries to the asphalt plant by tanker truck or railroad tank car and stored in the asphalt storage tank (S) in a liquid state. Heat is provided to maintain asphalt in the liquid state, usually using electricity or hot oil. Hydrocarbon emissions from the hot asphalt are partially removed by cooling in fluted air cooled vent pipes(R).[11]

Hot asphalt is pumped (stream 9) to an asphalt bucket (K), through a fluidometer and the amount of asphalt required to meet mix specification is weighed by the bucket scales[15] or metered by the fluidometer.

e. Batch Mixer - After weighing, the aggregate is dropped into a mixer (L) and dry mixed for a few seconds.[13,15] The mixer is identical to an egg beater except that the paddles are mounted horizontally instead of vertically, and rotate slowly.[11,15] Mixer capacities range from 0.5 metric ton (0.55 ton) to 9.1 metric tons (10 tons) with an average mixer size of 2.9 metric tons (3.2 tons).[16]

At the end of the dry mix period asphalt from the asphalt bucket is introduced into the mixer and the materials are

blended for less than a minute before being discharged to waiting trucks.

Beds of asphalt trucks are sprayed to prevent the hot mix from adhering to them.[16] Materials used in the truck spraying operation are either kerosene (5%), chemical release agent (38%) or fuel oil (55%). A typical release agent sprayed onto a truck bed consists of 20% silicone solids in 80% naphtha. The naphtha evaporates, and the silicone serves to prevent adhesion of the asphalt to the bed. Approximately 1% of the asphalt plants do not use the truck spraying operation.

f. Storage Silos - In some plants, hot mix from the mixer is conveyed to a storage silo from which the trucks are loaded. Before the advent of hot mix storage, the time required to load trucks was directly dependent upon the production capacity of the plant. The capacity of the plant is now dictated by the number of tons of asphalt that can be laid rather than the amount that can be hauled away.[11] The number of asphalt plants using storage facilities has been increasing.[3]

g. Automation - There is a general trend in the asphalt industry toward some degree of automation. Automation stabilizes process conditions and minimizes plant shutdowns. This is desirable from both an economic and emissions standpoint.[3]

Some plants are so automated that all plant operations except loading the cold aggregate into the cold storage bins are controlled from a control center by manual pushbuttons or digital card controlled sequences.[13]

h. Primary and Secondary Pollution Control Devices - All asphalt plants have some form of dust control equipment as an integral part of the process. Pollution control equipment is required to protect process equipment downstream from the

dryer from the impact of dust particles, to economize by preventing loss of fine aggregate and mineral filler, and to control atmospheric emissions.[17] Air pollution control regulations have made emission control the overriding consideration in an asphalt plant system design.[11,17]

The air pollution control system at an asphalt plant consists of primary and secondary collectors of two categories: wet and dry. Primary pollution control equipment used includes settling chambers (4%), cyclones (58%) and multicyclones (35%). Secondary control devices include gravity spray towers (8%), cyclone scrubbers (24%), venturi scrubbers (16%), orifice scrubbers (8%) and baghouses (40%). Eight percent of the plants surveyed reported using tertiary collectors.[16] Dust particles entrained in the gas stream and the products of combustion from the rotary dryer (stream 2) are vented to the primary collector (M). The average efficiency of the primary collector is 88.5%.[16] Dust removed by the primary control device from the gas stream is recycled (stream 4) to the hot aggregate elevator by a screw conveyor. The remaining gases (stream 6) are vented to the secondary control device (N), along with gases collected in the scavenger duct system (stream 7e).

The secondary control device (N), which has an average efficiency of 96.5%, further removes pollutants from the gas stream before discharging to the atmosphere (stream 13) through the stack (P).[16]

Material removed from the gas stream by the secondary collector is either discarded or reused. Approximately 53% of the plants surveyed reported recycling, and 61% reported the use of a settling pond for removal of solid material.[16]

3. Continuous Process

The continuous process operations, shown in Figure 8, are very similar to batch process operations, except in the method of feed to the mixer, and in the mixer itself.[13] The hot aggregate storage bins in this process are smaller than those used in a batch plant and hence do not provide a large surge capacity.[11,13] From the hot aggregate storage bins aggregate is metered through a set of feeder conveyors to another bucket elevator and into the mixer.[11] Asphalt is simultaneously metered to the inlet end of the mixer; the aggregate and asphalt feeder systems are mechanically interconnected to insure proper proportions in the mix.[13] The mixture is conveyed by the mixing paddles to the outlet end of the pugmill to be discharged continually into a loading hopper. Retention time and some surge capacity are controlled by an adjustable dam at the end of the mixer.[11,13]

4. Dryer Drum Process

A recently revitalized process for manufacturing asphalt hot mix, known as the dryer drum process, is now used by 2.6% of the asphalt plants in the United States.[16] This process simplifies the conventional processes by replacing hot aggregate storage bins, vibrating screens and the mixer with proportioning feed controls.[22]

Figure 9 is a block flow diagram of the dryer drum process. Both aggregate and asphalt are introduced near the flame end of the revolving drum in this process. A variable flow asphalt pump is electronically linked to the aggregate belt

---

[22]Terrel, R. L., et al. Asphalt Paving Mixtures Produced by the Dryer-Drum Process. Prepared for Federal Highway Administration, Olympia, by University of Washington, Seattle, and Federal Highway Administration, Vancouver. Final Report (PB 212 854). August 1972. 134 p.

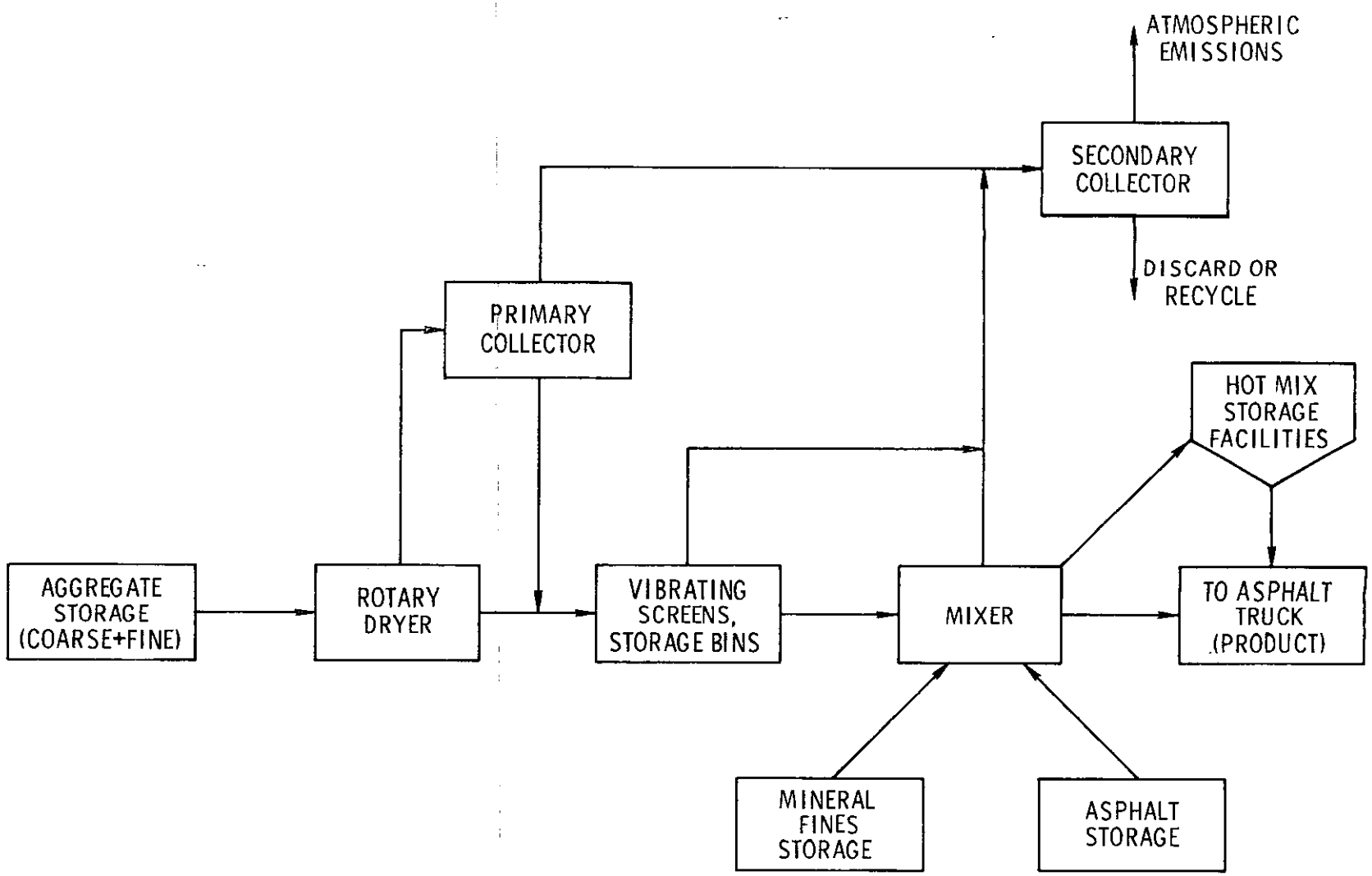

Figure 8. Block flow diagram of asphalt hot mix - continuous process[1,7,10,11,13,21]

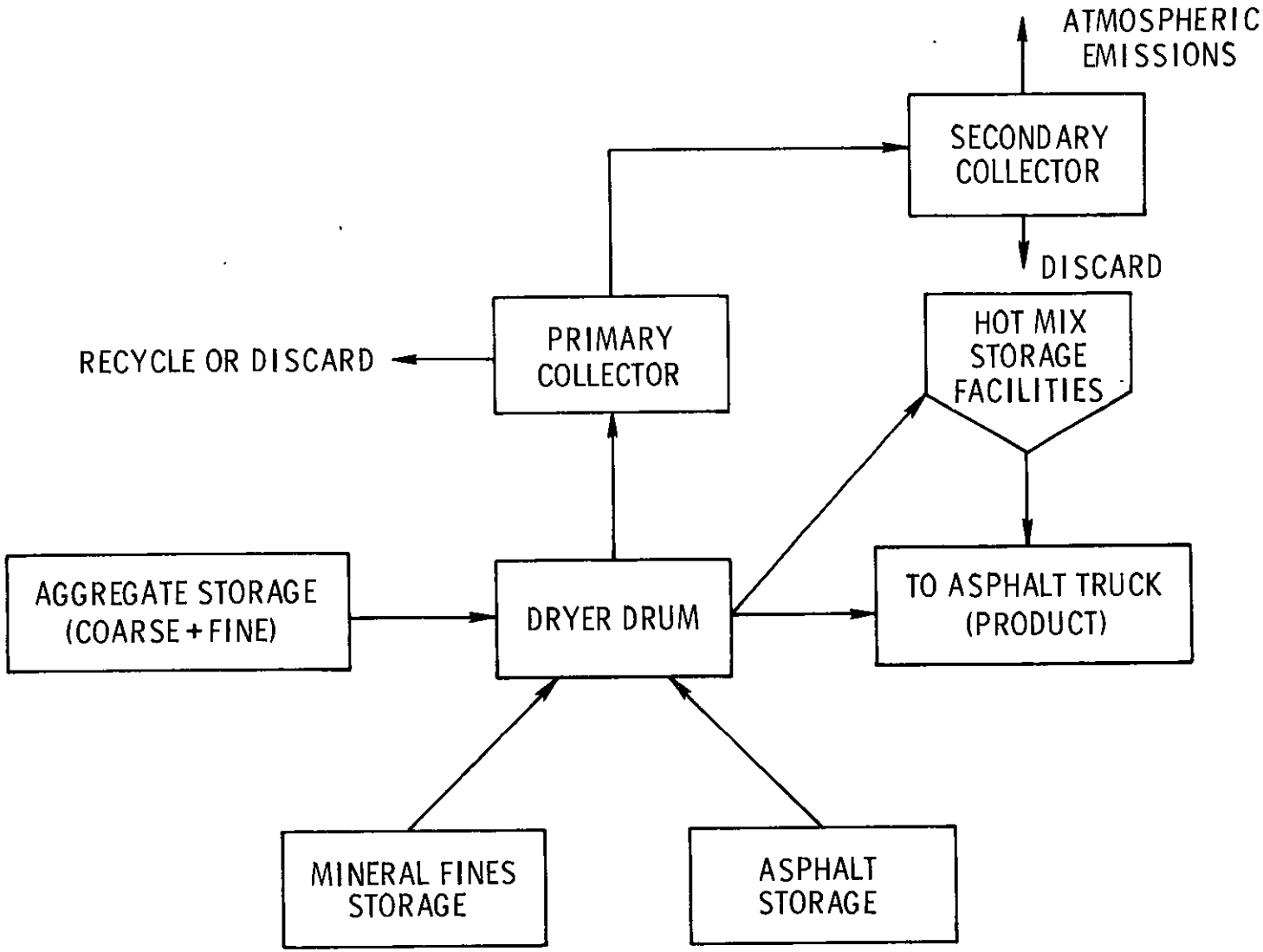

Figure 9. Block flow diagram of asphalt hot mix - dryer drum process[16]

scales to control mix specifications. Dryer drum plants use parallel flow design for hot burner gases and aggregate flow. Parallel flow has the advantage of giving the mixture a longer time to coat and collect dust in the mix, thereby reducing particulate emissions to the atmosphere. Particulate generated within the dryer for the dryer drum process (0.10 g/kg ± 35%) is lower than than generated within conventional dryers (22.5 g/kg). But as asphalt is being heated to high temperatures for a long period of time, hydrocarbon emissions from dryer drum dryers are greater. Studies are currently being conducted to arrive at a suitable compromise between hydrocarbon and particulate emissions. Asphalt is being introduced into different sections of the dryer to reduce residence time in the dryer, thereby reducing hydrocarbon emissions. However, the shorter residence time increases particulate emissions.

The mix is discharged from the revolving dryer drum into surge bins or storage silos.

B. MATERIALS FLOW

A simplified material balance for the asphalt hot mix batch process for a representative plant with a production rate of 160 metric tons/hr and an emission rate of 22 kg/hr is shown in Figure 10. (Stream numbers correspond to those in Figure 5.)

C. GEOGRAPHICAL DISTRIBUTION

Asphalt hot mix plants are located in residential communities, industrial areas, rural areas, and even in arid desert areas. Most permanently installed plants are located in urban areas where there is a continuous market for new paving and resurfacing work. Portable plants are usually

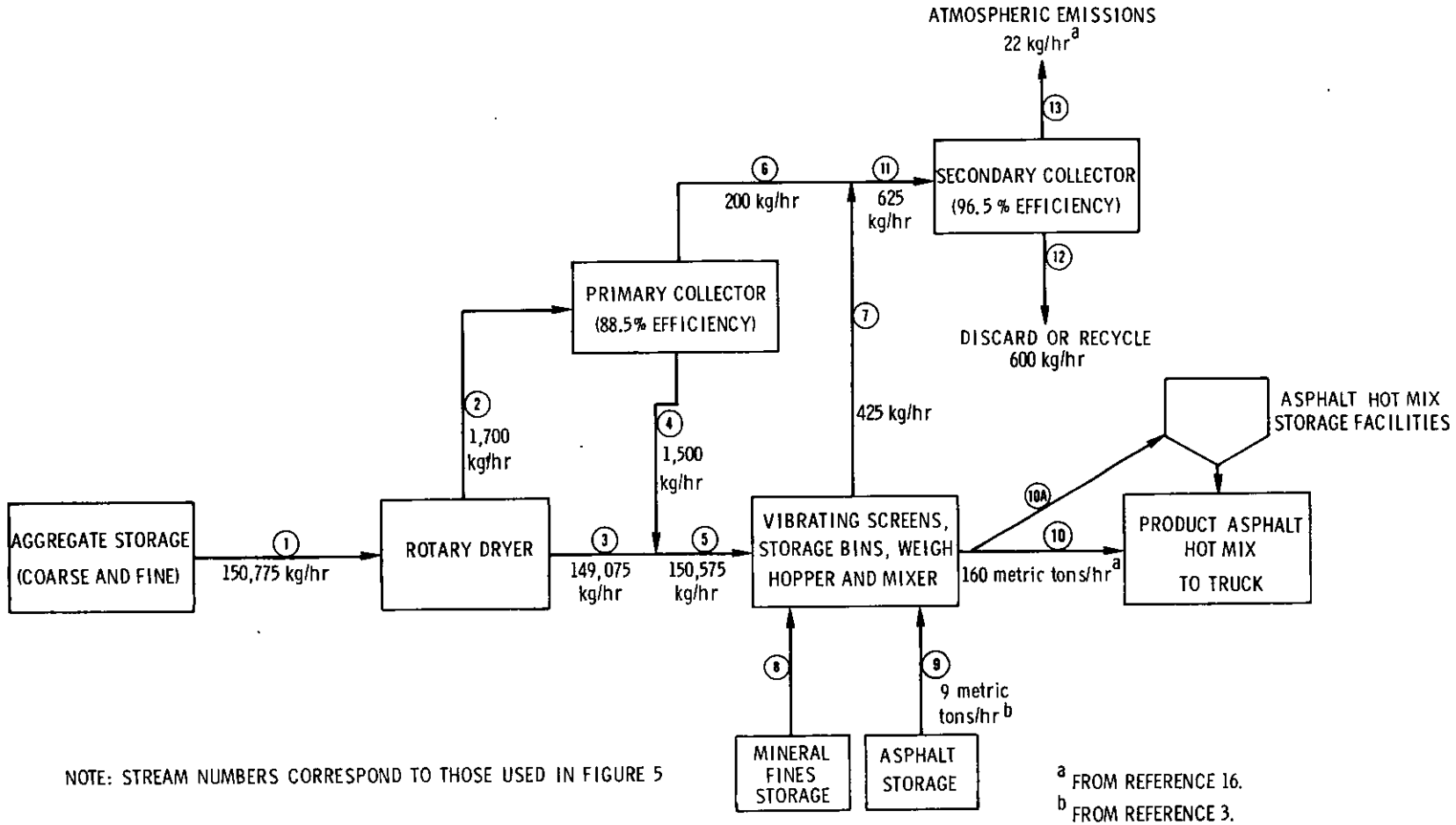

Figure 10. Material balance for asphalt hot mix - batch process

involved in highway construction projects since they can be disassembled and relocated to shorten hauling distances as highway construction proceeds.[11]

In January 1974, there were 3,989 operating plants in the U.S. Figure 11 provides a map showing the state distribution of asphalt plants.[2] Table 5 lists the existing asphalt hot mix plants in the U.S. and shows their percent state distribution.

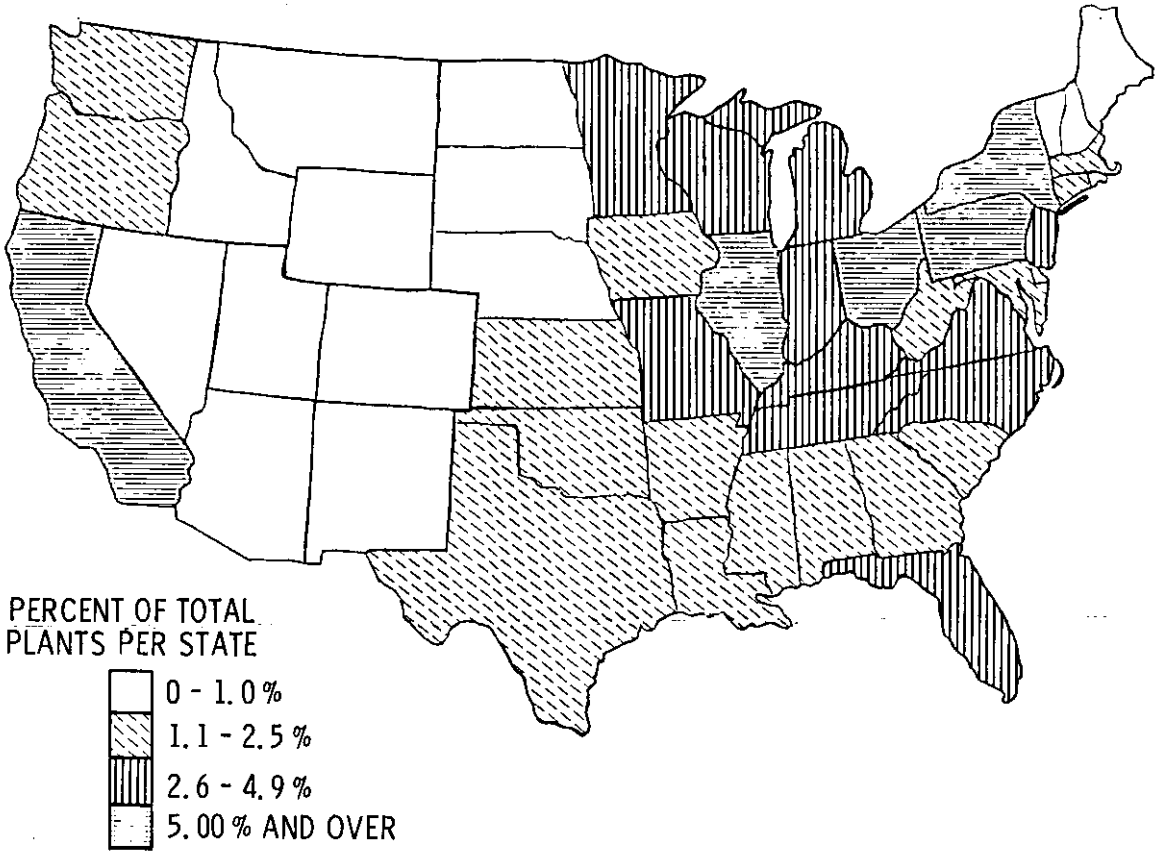

Figure 11. State distribution of asphalt hot mix plants[2]

Table 5. EXISTING ASPHALT HOT MIX PLANTS IN THE U.S. AND STATE DISTRIBUTION (JANUARY 1974)[2]

State	Number of plants	Percent of total
Alabama	82	2.1
Alaska	30	0.8
Arizona	12	0.3
Arkansas	38	1.0
California	228	5.7
Colorado	38	1.0
Connecticut	50	1.3
Delaware	8	0.2
District of Columbia	4	0.1
Florida	115	2.9
Georgia	83	2.1
Hawaii	10	0.3
Idaho	27	0.7
Illinois	202	5.1
Indiana	130	3.3
Iowa	68	1.7
Kansas	61	1.5
Kentucky	128	3.2
Louisiana	66	1.7
Maine	28	0.7
Maryland	66	1.7
Massachusetts	50	1.3
Michigan	147	3.7
Minnesota	114	2.9
Mississippi	91	2.3
Missouri	153	3.8
Montana	31	0.8
Nebraska	37	0.9
Nevada	8	0.2
New Hampshire	20	0.5

Table 5 (continued). EXISTING ASPHALT HOT MIX PLANTS IN THE U.S. AND STATE DISTRIBUTION (JANUARY 1974)[2]

State	Number of plants	Percent of total
New Jersey	117	2.9
New Mexico	31	0.8
New York	212	5.3
North Carolina	116	2.9
North Dakota	19	0.5
Ohio	287	7.2
Oklahoma	57	1.4
Oregon	55	1.4
Pennsylvania	258	6.5
Rhode Island	12	0.3
South Carolina	58	1.5
South Dakota	31	0.8
Tennessee	105	2.6
Texas	96	2.4
Utah	18	0.5
Vermont	12	0.3
Virginia	106	2.7
Washington	71	1.8
West Virginia	44	1.1
Wisconsin	135	3.4
Wyoming	24	0.6
TOTAL	3,989	100

SECTION 4

EMISSIONS

A. LOCATIONS AND DESCRIPTIONS

At an asphalt hot mix plant, atmospheric emission sources can be grouped according to four categories: stack emissions, mixer emissions, fugitive emissions, and open source emissions. These are discussed in detail below.

1. Stack Emissions

Materials emitted from various sources within an asphalt hot mix plant are vented either through the dryer vent or the scavenger vent. The dryer vent stream is controlled by the primary and secondary collectors, while the scavenger vent stream is controlled only by the secondary collector before being released through the stack.

Sources connected to the scavenger vent within an asphalt hot mix plant are the hot aggregate elevator, vibrating screens, hot aggregate storage bins, weigh hopper and mixer. The dryer vent carries emissions only from the dryer.

Material emitted from the hot aggregate elevator, vibrating screens, hot aggregate bins and weigh hopper is particulate that is 85.3% to 98.9% below 50 μm in size that becomes airborne within the gas stream flowing through the plant ductwork.[12]

Emissions from the mixer are intermittent, occurring when the load of asphalt hot mix is dumped into trucks. These emissions consist of particulate, hydrocarbons, SO_x, NO_x, CO, aldehydes, and polycyclic organic material.

Emissions generated within the dryer consists of particulate and other gaseous substances. Particulates include dust particles, fly ash, soot and unburned droplets of fuel oil.

As the dryer rotates, the aggregate it contains is raised by flights and cascaded across the cross section of the revolving cyclinder, while hot combustion gases flow countercurrent to the aggregate, causing particulates to be carried out with the gas stream. The velocity of the gas stream at which particulate will be come airborne depends on particle size, weight and shape, and is called terminal velocity.[11]

Fly ash results from fuel oil impurities, which form solid rather than gaseous combustion products, and is proportional to the ash content of the fuel. Soot consists of unburned carbon particles formed during combustion control problems such as a malfunctioning burner, lack of air, or insufficient heating of fuel oil cause emission of unburned oil droplets.

Gaseous combustion products formed within the rotary dryer include carbon monoxide, sulfur oxides, nitrogen oxides, a variety of partially burned hydrocarbons and polycyclic organic material.

Carbon monoxide is formed when inadequate oxygen is available. Deficiency of oxygen can be caused by insufficient air for the total combustion reaction, by poor mixing, or by quenching in the burner flame.[23] Sulfur oxides are produced when fuel

[23]Schreter, R.E. Carbon Monoxide (CO) Formation in Aggregate Dryers. Hauck Manufacturing Company. July 21, 1973. 13 p.

containing sulfur is combusted. Nitrogen oxides are formed when air (composed of 79% nitrogen and 21% oxygen) is heated by high temperature flames to 815°C or more.[24]

Table 6 lists the materials emitted through the stack and their concentrations in the gas stream.

Table 6. CONCENTRATION OF MATERIAL EMITTED FROM STACK

Material emitted	Concentration
Particulate	400.0 mg/m^3 ± 20%
Sulfur oxides	30.6 ppm
Nitrogen oxides	<29 ppm
Hydrocarbons (as methane equivalents)	42.3 ppm
Carbon monoxide	32.2 ppm ± 18%
Polycyclic organic material	36.4 $\mu g/m^3$ ± 38%
Aldehydes	14.8 ppm ± 33%

2. Mixer Emissions

To produce the hot mix, asphalt in a liquid state comes in contact with hot aggregate in the mixer, and the mixture is discharged into trucks or conveyed to an asphalt hot mix storage silo by means of a skip hoist.

Particulate and gaseous emissions are emitted during the mixing operation. Some of these emissions are vented through the scavenger system to the secondary control device while the rest of the material emitted is released to the atmosphere during discharge of hot mix from the mixer into the skip hoist or the asphalt truck.

[24]Environmental Pollution Control at Hot Mix Asphalt Plants. National Asphalt Pavement Association. Riverdale. Information Series 27. 23 p.

Atmospheric emissions from the mixer were studied by The Asphalt Institute[25,26] and the results are summarized in Table 7. (Estimates and approximations made are discussed in Appendix F.)

Table 7. CONCENTRATION OF MATERIAL EMITTED FROM MIXER[25,26]

Material emitted	Concentration
Particulate	7.2 mg/m^3
Sulfur oxides	<2 ppm
Nitrogen oxides	<0.1 ppm
Hydrocarbons	<3.5 ppm
Carbon monoxide	6 ppm
Polycyclic organic material	0.36 $\mu g/m^3$
Trace metals	0.24 $\mu g/m^3$
Hydrogen sulfide	1.5 ppm
Ozone	<0.1 ppm

3. Fugitive Emissions

Sources of emissions considered in this category include particulate emissions from transfer points, hydrocarbon and POM emissions from handling and storage of raw liquid asphalt, hydrocarbon emissions from oil-coated truck beds, miscellaneous emissions within the plant due to plant breakdown, disposal of mineral fines rejected from the vibration screens and emissions from the settling pond.

[25]Asphalt Hot-Mix Emission Study. The Asphalt Institute. College Park. Research Report 75-1 (RR-75-1). March 1975. 103 p.

[26]Puzinauskas, V. P., and L. W. Corbett. Report on Emissions from Asphalt Hot Mixes. The Asphalt Institute. (Presented at the Division of Petroleum Chemistry, Inc. American Chemical Society meeting. Chicago. August 1975.) 20 p.

These emissions vary and can be reduced through proper housekeeping and equipment maintenance. Table 8 lists fugitive emission points for an asphalt hot mix plant site.

Table 8. FUGITIVE EMISSIONS FROM AN ASPHALT HOT MIX PLANT

Emission source	Material emitted
Asphalt loading and handling	Polycyclic organic materials Hydrocarbons
Settling pond	Hydrocarbons
Oil-coated trucks	Hydrocarbons
Transfer points	Particulate

4. Open Source Emissions

Particulate emissions considered under the open source category within an asphalt hot mix plant include emissions from fine aggregate stockpiles, loading operations, cold storage bins, cold aggregate conveyor, and truck traffic. These emissions are caused by natural elements, poor housekeeping, exposed aggregate stockpiles and storage bins, and uncontrolled traffic conditions.

Open source emissions will not be covered in this document since they are considered in detail in publications on crushed granite,[27] crushed limestone,[28] crushed sandstone,

[27]Chalekode, P. K., J. A. Peters, and T. R. Blackwood. Source Assessment: Crushed Granite. Monsanto Research Corporation, EPA Contract 68-02-1874. Dayton. Preliminary document submitted to the EPA, July 1975. 62 p.

[28]Chalekode, P. K., and T. R. Blackwood. Source Assessment: Crushed Limestone. Monsanto Research Corporation, EPA Contract 68-02-1874. Dayton. Preliminary document submitted to the EPA, February 1976. 59 p.

quartz and quartzite,[29] crushed stone,[30] and transport of sand and gravel.[31]

B. EMISSION FACTORS

State air pollution regulations affecting the asphalt hot mix industry vary considerably from state to state but in general these cover particulate emission rates, visible emissions, fugitive dust, and odor.[32] Dual standards exist based on plant age. The standards for existing plants are less stringent than those for new plants.

Particulate emission standards are expressed as ratio of emission weight to production weight, or emission weight per dry standard cubic foot of stack gas or emission weight per thousand pounds of discharge gas.

Visible emission standards are expressed in either Ringelmann numbers or opacity. Exceptions to opacity standards are allowed for startup and special maintenance.[32]

---

[29] Chalekode, P. K., and T. R. Blackwood. Source Assessment: Crushed Sandstone, Quartz, and Quartzite. Monsanto Research Corporation, EPA Contract 68-02-1874. Dayton. Preliminary document submitted to the EPA, August 1975. 59 p.

[30] Blackwood, T. R., P. K. Chalekode, and R. A. Wachter. Source Assessment: Crushed Stone. Monsanto Research Corporation. Dayton. Report No. MRC-DA-536. Preliminary document submitted to the EPA, February 1976. 108 p.

[31] Chalekode, P. K., and T. R. Blackwood. Source Assessment: Transport of Sand and Gravel. Monsanto Research Corporation, EPA Contract 68-02-1874. Dayton. Preliminary document submitted to the EPA, December 1974. 86 p.

[32] Air Pollution Regulations Study. National Asphalt Pavement Association. Riverdale. Information Series 49. 1973.

Fugitive dust regulations require that reasonable measures be taken to prevent particulate matter from becoming airborne. Only New York, Pennsylvania, Indiana, Kansas, and Hawaii quantify the amount of allowable fugitive dust.[32]

Similarly, odor regulations are generally nonspecific. Odors which "cause a nuisance or interfere with reasonable enjoyment of life or property" are restricted.

New source performance standards and effluent limitations guidelines for new or modified asphalt concrete plants were proposed in June 1973,[33] and the final standards were published in March 1974[34] and are currently under judicial review. These standards state that no owner or operator shall discharge into the atmosphere any gases which: (a) contain particulate matter in excess of 90 mg/dscm[a] (0.04 grains/dscf); and/or (b) exhibit $\geq$20% opacity.

The concentration standard applies to emission of particulate from the control device, while opacity regulations cover all emission sources, not just stack emissions.[13]

1. Stack Emissions

a. Particulate Emissions - Emission rates for particulates were determined using data acquired through an industrial survey.[16]

---

[a]dscm = dry standard cubic meters; dscf = dry standard cubic feet.

- - - - - - - - - -

[33]New Source Performance Standards for New or Modified Asphalt Concrete Plants. Federal Register. 38:15407, June 11, 1973.

[34]New Source Performance Standards for New or Modified Asphalt Concrete Plants. Federal Register. 39:9314, March 8, 1974.

Total particulate generated within a typical dryer is reported to be 22.5 kg/metric ton (45 lb/ton)[35] and emission factors for different types of control equipment are shown in Table 9.[35]

Table 9. PARTICULATE EMISSION FACTORS FOR CONTROL EQUIPMENT USED IN AN ASPHALT HOT MIX PLANT[35]

Type of control	Efficiency, percent	Emission factors kg/metric ton of asphalt produced	(lb/ton of asphalt produced)
Settling chamber	66.67	7.50	(15.0)
Cyclone	96.22	0.85	(1.7)
Multicyclone	99.33	0.15	(0.3)
Gravity spray tower	99.11	0.20	(0.4)
Cyclone scrubber	99.33	0.15	(0.3)
Venturi or orifice scrubber	99.91	0.02	(0.04)
Baghouse	99.98	0.005	(0.01)
Uncontrolled particulate generated in dryer	--	22.5	(45.0)

Based on production rate, hours of operation and type of primary and secondary control equipment used by each reporting plant, the individual emission rates were calculated and grouped into classes as shown in Table 10. Class limits for emission rates were set and class frequency and cumulative frequency were determined.

Data from Table 10 were used to plot Figure 12, a plot of emission rate vs. cumulative percent of plants having an emission rate equal to or less than the indicated value.

[35]Compilation of Air Pollutant Emission Factors. U.S. Environmental Protection Agency. Research Triangle Park. Publication No. AP-42. April 1973. p. 8.1-8.4.

Table 10. ASPHALT HOT MIX INDUSTRY SURVEY - PARTICULATE EMISSION RATE[16]

Primary collector only (uncontrolled emissions)			Primary and secondary collector (controlled emissions)		
Emission rate (class limits), g/s	Class frequency	Cumulative frequency, %	Emission rate (class limits), g/s	Class frequency	Cumulative frequency, %
1.51 to 3.18	20	5.00	0.066 to 0.13	18	4.50
3.18 to 6.68	80	25.00	0.13 to 0.27	80	24.50
6.68 to 14.05	69	42.25	0.27 to 0.55	76	43.50
14.05 to 29.55	63	58.00	0.55 to 1.13	60	58.50
29.55 to 62.13	103	83.75	1.13 to 2.29	24	64.50
62.13 to 130.60	14	87.25	2.29 to 4.67	29	71.75
130.60 to 274.70	6	88.75	4.67 to 9.52	53	85.00
274.70 to 577.60	15	92.50	9.52 to 19.40	14	88.50
577.60 to 1214.00	20	97.50	19.40 to 39.50	29	95.75
1214.00 to 2552.70	10	100.00	39.50 to 80.40	17	100.00

Sample size	400		Sample size	400	
Minimum value	1.51 g/s	(12.0 lbs/hr)	Minimum value	0.066 g/s	(0.52 lbs/hr)
Maximum value	2,551.5 g/s	(20,250 lbs/hr)	Maximum value	80.3 g/s	(637.5 lbs/hr)
Mean	123.88 g/s	(983.2 lbs/hr)	Mean	6.09 g/s	(48.34 lbs/hr)
Standard deviatic	320.3 g/s	(2,542.3 lbs/hr)	Standard deviation	12.15 g/s	(96.4 lbs/hr)
95% Confidence l:	29.9 g/s	(273.3 lbs/hr)	95% Confidence limit	1.13 g/s	(9.00 lbs/hr)
Lower limit	94.0 g/s	(745.9 lbs/hr)	Lower limit	4.96 g/s	(39.3 lbs/hr)
Upper limit	153.8 g/s	(1,220.5 lbs/hr)	Upper limit	7.22 g/s	(57.3 lbs/hr)

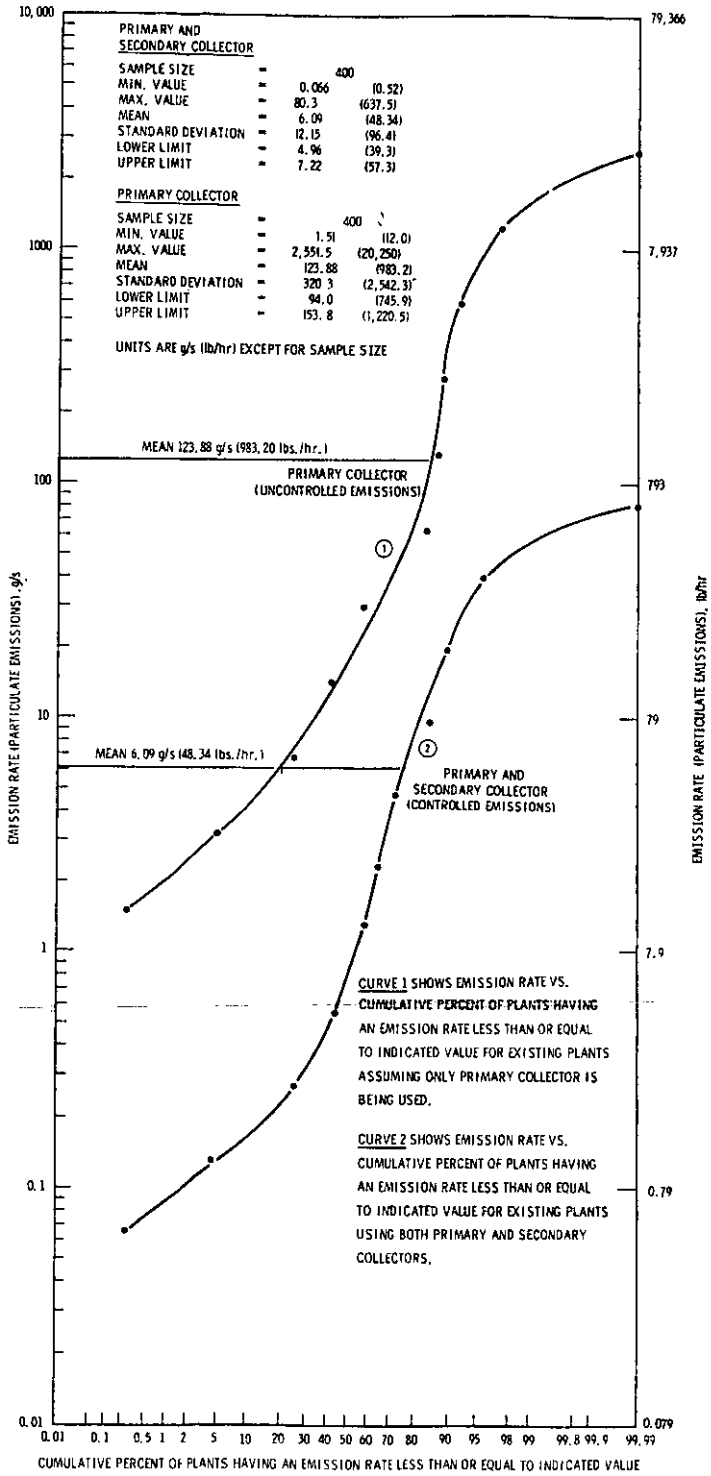

Figure 12. Asphalt hot mix emission rate

From Figure 12 the mean emission rate for controlled particulate emissions from an asphalt hot mix plant is 6.09 g/s (48.34 lb/hr), and 76% of the operating plants have emission rates equal to or less than the mean.

Figure 12 also shows that 70% of asphalt hot mix plants have a controlled particulate emission rate of less than or equal to 1.39 g/s (11.0 lb/hr). Assuming a representative flow from the stack to be 916 dscm/min (32,350 dscf/min), the

$$\text{Particulate emission rate} = \left(\frac{5.0\ \text{kg}}{\text{hr}}\right)\left(\frac{\text{min}}{916\ \text{dscm}}\right)\left(\frac{\text{hr}}{60\ \text{min}}\right)$$

$$= \frac{5.0}{(916)(60)}\ \text{kg/dscm}$$

$$= 9.1 \times 10^{-5}\ \text{kg/dscm}$$

$$= 91\ \text{mg/dscm}$$

Approximately 70% of the asphalt hot mix plants have emissions less than or equal to 90 mg/dscm (0.04 grains/dscf) using emission factors given in Table 9.[35]

b. Sulfur Oxides - The industrial survey showed that over 66% of operating asphalt hot mix plants used fuel oil for combustion. Possible SO_x emissions from the stack were calculated assuming all sulfur in the fuel oil is oxidized to SO_x. (See Appendix F for calculations.) The amount actually released through the stack may be attenuated by water scrubbers or by aggregate itself where limestone is being dried.[21]

c. Nitrogen Oxides, Hydrocarbons and Carbon Monoxide - Concentrations of nitrogen oxides, hydrocarbons and carbon monoxide detected in the stack gas as a result of sampling conducted at a representative asphalt hot mix plant were used to calculate emission rates (see Appendix F).

d. Polycyclic Organic Material and Aldehydes Field sampling was carried out at a representative asphalt hot mix plant to determine total aldehydes and polycyclic organic material present in the stack exhaust. Results of the sampling effort are presented in Appendix B.

Table 11 gives the emission factors for material emitted from the stack. Tables 12 and 13 give emission factors for the various polycyclic organic materials and the various aldehydes emitted from the stack.

Table 11. EMISSION FACTORS FOR SELECTED MATERIALS EMITTED FROM STACK

Material emitted	Emission factor, g/metric ton of asphalt hot mix produced
Particulate	137 ± 20%[a]
Sulfur oxides	32[b]
Nitrogen oxides	18[b]
Hydrocarbons (as methane equivalents)	14[b]
Carbon monoxide	19 ± 18%[b]
Polycyclic organic material	0.013 ± 38%[c]
Aldehydes	10 ± 33%[b]

[a]Calculated from mean value of 6.09 g/s in Figure 12 and mean average production rate of 160 metric tons/hr in Table A-1.

[b]Calculations described in Appendix F.

[c]Calculation shown in Table B-20, Appendix B.

2. Mixer Emissions

Materials emitted from the mixer and the concentrations of these emissions were determined by The Asphalt Institute.[25,26] These data were used to estimate maximum possible emissions from the mixer and are presented in Appendix F. Table 14 gives the estimated emission factors for materials emitted from the mixer.

Table 12. EMISSION FACTORS FOR POLYCYCLIC ORGANIC MATERIAL EMITTED FROM STACK

POM component	Emission factor, mg/metric ton of asphalt hot mix produced
Dibenzothiophene	2.1 ± 76%
Anthracene/phenanthrene	2.5 ± 15%
Methylanthracenes/phenanthrenes	4.7 ± 7%
9-Methylanthracene	0.16 ± 71%
Fluoranthene	0.43 ± 146%
Pyrene	0.70 ± 173%
Benzo(c)phenanthrene	0.16 ± 71%
Chrysene/benz(a)anthracene	0.18 ± 24%
7,12-Dimethylbenz(a)anthracene	0.16 ± 71%
3,4-Benzofluoranthene	0.34 ± 144%
Benzo(a)pyrene/benzo(e)pyrene/perylene	0.19 ± 10%
3-Methylcholanthrene	0.16 ± 71%
Dibenz(a,h)anthracene	0.16 ± 71%
Indeno(1,2,3-c,d)pyrene	0.16 ± 71%
7H-Dibenzo(c,g)carbazole	0.19 ± 6%
Dibenzo(a,h & a,i)pyrene	0.16 ± 71%

12.05

Table 13. EMISSION FACTORS FOR ALDEHYDES EMITTED FROM STACK

Aldehydes emitted	Emission factor,[a] g/metric ton of asphalt hot mix produced
Formaldehyde	0.077 ± 26%
Isobutanal	0.63 ± 350%
Butanal	1.2 ± 12%
Isopentanal	8.3 ± 30%

[a]Calculated from production rate and emission rate shown in Table B-23.

Table 14. EMISSION FACTORS FOR MATERIAL EMITTED FROM THE MIXER

Material emitted	Maximum estimated[a] emission factor, mg/metric ton of asphalt hot mix produced
Particulate	<320
Sulfur oxides	<260
Nitrogen oxides	<9.3
Hydrocarbons	<110
Carbon monoxide	<340
Polycyclic organic material	<0.016
Trace metals	<0.011
Hydrogen sulfide	<100
Ozone	<9.9

[a]Described in Appendix F.

C. DEFINITION OF A REPRESENTATIVE SOURCE

A representative asphalt hot mix plant was defined for the purpose of assessing the environmental impact of the asphalt hot mix industry. An industrial survey was conducted to obtain plant parameter data for the asphalt hot mix industry.[16] The parameters used to define a representative plant included plant type, plant production rate, capacity of mixer, types of primary and secondary control equipment, type of fuel combusted, type of release agent used, stack height and emission factors for pollutants emitted. Average values of these parameters were used to define the representative source in the asphalt hot mix industry.

Appendix A contains the summary of survey data that were used to determine a representative plant. Table 15 summarizes the data for a representative plant. Table 16 summarizes data for a typical asphalt hot mix plant that was sampled to obtain

measured

Table 15. SUMMARY OF DATA FOR A REPRESENTATIVE ASPHALT HOT MIX PLANT

Parameter	Representative plant	
	Percent of industry represented	Representative data
Plant type	76	Permanent batch plant
Rate of production, metric tons/hr (tons/hr)	100	160 ± 4% (177 ± 4%)
Capacity of mixer, metric tons (tons)	100	2.9 ± 4% (3.2 ± 4%)
Primary collector	58	Cyclone
Secondary collector	60	Wet scrubber
Fuel type	66	Oil
Release agent type	55	Fuel oil
Stack height, m (ft)	100	10.3 ± 3% (33.8 ± 3%)
Particulate emission rate, kg/hr (lb/hr)	100	21.93 ±20% (48.34 ±20%)

page 131

Table 16. SUMMARY OF DATA FOR A TYPICAL EXISTING ASPHALT HOT MIX PLANT THAT WAS SELECTED FOR SAMPLING AS A REPRESENTATIVE PLANT

Reference Confidential data base

Parameter	Plant sampled
Plant type	Permanent batch plant
Rate of production, metric tons/hr (tons/hr)	160.3 ± 16% (177 ± 16%)
Capacity of mixer, metric tons (tons)	3.6 (4.0)
Primary collector	Cyclone
Secondary collector	Wet scrubber (Venturi)
Fuel type	Oil
Release agent type	Fuel oil
Stack height, m (ft)	15.85 (52)
Particulate emission rate, kg/hr (lb/hr)	7.7 ± 48% (17.0 ± 48%)

further information on polycyclic organic materials emitted during asphalt hot mix production.

D. ENVIRONMENTAL EFFECTS

1. Determination of Severity

a. Maximum Ground Level Concentration - The maximum ground level concentration, χ_{max}, for each material emitted from asphalt hot mix manufacturing was estimated by Gaussian plume dispersion theory. The maximum ground level concentration, χ_{max} (in g/m^3), was calculated using the equation:

$$\chi_{max} = \frac{2\,Q}{\pi H^2 e \bar{u}} \qquad (1)$$

where Q = mass emission rate, g/s
H = effective emission height, m
e = 2.72
π = 3.14
$\bar{u}$ = average wind speed, m/s (= 4.47 m/s)

b. Time-Averaged Maximum Ground Level Concentration - $\bar{\chi}_{max}$, the maximum ground level concentration averaged over a given period of time, is calculated from χ_{max}. The averaging time is 24 hr for noncriteria pollutants (chemical substances). For criteria pollutants, averaging times are the same as those used in the primary ambient air quality standards (e.g., 3 hr for hydrocarbons and 24 hr for particulates). The relationship between χ_{max} and $\bar{\chi}_{max}$ is expressed as:

$$\bar{\chi}_{max} = \chi_{max} \left(\frac{t_0}{t}\right)^{0.17} \qquad (2)$$

where t_0 = short-term averaging time or 3 min
t = averaging time, min

c. Source Severity - To obtain a quantitative measure of the hazard potential of the emission source, the source severity, S, is defined as:

$$S = \frac{\bar{\chi}_{max}}{F} \qquad (3)$$

where $\bar{\chi}_{max}$ is the maximum time-averaged ground level concentration of each pollutant, and F is defined as the primary ambient air quality standard for criteria pollutants (particulates, SO_x, NO_x, CO and hydrocarbons). For non-criteria pollutants:

$$F = TLV \cdot 8/24 \cdot 0.01 \qquad (4)$$

The factor 8/24 adjusts the TLV to a continuous rather than workday exposure, and the factor of 0.01 accounts for the fact that the general population is a higher risk group than healthy workers. Thus, $\bar{\chi}_{max}/F$ represents the ratio of the maximum mean ground level concentration to the concentration constituting an incipient hazard potential.

Tables 17, 18, 19 and 20 contain emission rates, maximum ground level concentrations, time-averaged ground level concentrations and source severities of materials emitted from the stack, polycyclic organic material emitted from the stack, aldehydes emitted from the stack, and materials emitted from the mixer, respectively. Appendix D contains the derivation of source severity equations.

Industry survey data were used to calculate source severities for all reporting plants; the severities were grouped into classes. Table 21 gives class limits for the source severities, and class frequencies and cumulative frequencies. Data from Table 21 were used to plot Figure 13, a graph of

Table 17. SOURCE SEVERITY OF EMISSIONS FROM THE STACK

Material emitted	TLV, mg/m^3	Emission rate, g/s	χ_{max}, mg/m^3	$\bar{\chi}_{max}$, mg/m^3	Source severity
Particulate	10	6.09 ± 20%	3.01	1.05	4.02
NO_x	9	0.78	0.38	0.18	1.83
SO_2	13	1.42	0.7	0.25	0.67
Hydrocarbons (methane equivalent)	67	0.63	0.31	0.16	0.96
POM(Benzene soluble)	0.2	0.00056 ± 38%	0.00028	0.000097	0.14
Carbon monoxide	55	0.83 ± 18%	0.41	0.25	0.01
Aldehydes	180	0.45 ± 33%	0.22	0.078	0.13

source severity plotted against cumulative percent of plants having source severity less than or equal to the indicated value. Figure 13 shows that the mean source severity for the asphalt industry is 5.59 and 56% of all operating asphalt plants have a source severity less than or equal to 1.0.

2. Contribution to Total Air Emissions

The average emission rate of 21.93 kg/hr for particulate emissions, the average hours of operation for the asphalt hot mix industry of 666 hr/yr ± 5.1% and the total number of operating plants, 3,989, extrapolated to 1975 assuming a 4% increase were used to calculate the total mass of particulate emitted by the asphalt hot mix industry. The 1975 mass of particulate emissions from asphalt hot mix plants was 63,000 metric tons.

Table 18. SOURCE SEVERITY OF POLYCYCLIC ORGANIC MATERIAL EMITTED FROM STACK

POM component	Emission rate, μg/s	χ_{max}, ng/m^3	$\bar{\chi}_{max}$, ng/m^3	Source severity: Using TLV = 0.2 mg/m^3	Source severity: Using TLV = 1 μg/m^3 for carcinogens[b]
Dibenzothiophene	93.3	46	16.1	0.024	0.024
Anthracene/phenanthrene	111.1	55	19.3	0.029	0.029
Methylanthracenes/phenanthrenes	208.9	103	36.1	0.054	0.054
9-Methylanthracene	7.1	3.5	1.2	0.002	0.002
Fluoranthene	19.1	9.4	3.3	0.005	0.005
Pyrene	31.1	15.3	5.4	0.008	0.008
Benzo(c)phenanthrene	7.1	3.5	1.2	0.002	0.368[a]
Chrysene/benz(a)anthracene	8.0	4.0	1.4	0.002	0.002
7,12-Dimethylbenz(a)anthracene	7.1	3.5	1.2	0.002	0.368[a]
3,4-Benzofluoranthene	15.1	7.5	2.6	0.004	0.004
Benzo(a)pyrene/benzo(e)pyrene/perylene	8.4	4.2	1.5	0.002	0.436[a]
3-Methylcholanthrene	7.1	3.5	1.2	0.002	0.368[a]
Dibenz(a,h)anthracene	7.1	3.5	1.2	0.002	0.368[a]
Indeno(1,2,3-c,d)pyrene	7.1	3.5	1.2	0.002	0.368[a]
7H-Dibenzo(c,g)carbazole	8.4	4.2	1.5	0.002	0.436[a]
Dibenzo(a,h & a,i)pyrene	7.1	3.5	1.2	0.002	0.368[a]

[a]These POM's are carcinogenic.[36]

[b]Assumed for the treatment of suspected carcinogens per instructions from IERL-RTP.

[36]Particulate Polycyclic Organic Matter - Biologic Effects of Atmospheric Pollutants. Washington, National Academy of Sciences, 1972. p. 6-12.

Table 19. SOURCE SEVERITY OF ALDEHYDES EMITTED FROM THE STACK

Aldehyde emitted	TLV, mg/m^3	Emission height, m	Emission rate, mg/s	χ_{max}, $\mu g/m^3$	$\bar{\chi}_{max}$, $\mu g/m^3$	Source severity[a]
Formaldehyde	3	10.3	3.4 ± 26%	1.7	0.59	0.059
Isobutanal	180[b]	10.3	28 ± 350%	14	4.8	0.0081
Butanal	180[b]	10.3	53 ± 12%	26	9.2	0.015
Isopentanal	180[b]	10.3	370 ± 30%	180	64	0.11
Total aldehydes	180[b]	10.3	450 ± 33%	224	78	0.13

[a]Source severity = 5.5(emission rate)/TLV(emission height)^2.
[b]Using TLV for acetaldehyde.

Table 20. SOURCE SEVERITY OF EMISSIONS FROM THE MIXER

Material emitted	TLV, mg/m^3	Emission rate, mg/s	χ_{max}, $\mu g/m^3$	$\bar{\chi}_{max}$, $\mu g/m^3$	Source severity
Particulate	10	<14	<35	<12	<0.047
Sulfur oxides	13	<12	<30	<11	<0.029
Nitrogen oxides	9	<0.41	<1.0	<0.53	<0.0053
Hydrocarbons	67	<4.9	<12	<6.1	<0.038
Carbon monoxide	55	<15	<38	<23	<0.00056
Polycyclic organic material	0.2	<0.00071	<0.0018	<0.00062	<0.00093
Trace metals	0.5	<0.00049	<0.0012	<0.00043	<0.00026
Hydrogen sulfide	15	<4.4	<11	<3.9	<0.077
Ozone	0.2	<0.44	<1.1	<0.39	<0.58

Table 21. ASPHALT HOT MIX INDUSTRY SURVEY - PARTICULATE SOURCE SEVERITY[16]

Primary collector only (uncontrolled emissions)			Primary and secondary collector (controlled emissions)		
Source severity (class limits)	Class frequency	Cumulative frequency, %	Source severity (class limits)	Class frequency	Cumulative frequency, %
0.31 to 0.86	9	2.25	0.0086 to 0.024	1	0.25
0.86 to 2.40	51	15.00	0.024 to 0.065	20	5.25
2.40 to 6.60	74	33.50	0.065 to 0.180	65	21.50
6.60 to 18.40	88	55.50	0.180 to 0.495	89	43.75
18.40 to 51.20	92	78.50	0.495 to 1.360	69	61.00
51.20 to 143.00	34	87.00	1.36 to 3.75	61	76.25
143.00 to 397.00	14	90.50	3.75 to 10.30	42	86.75
397.00 to 1100.00	24	96.50	10.30 to 28.40	34	95.25
1100.00 to 3070.00	9	98.75	28.40 to 78.30	16	99.25
3070.00 to 8544.00	5	100.00	78.30 to 215.2	3	100.00
Sample size	400		Sample size	400	
Minimum value	0.307		Minimum value	0.0086	
Maximum value	8544.4		Maximum value	215.19	
Mean	187.50		Mean	5.59	
Standard deviation	772.16		Standard deviation	17.15	
95 percent confidence limit	72.07		95 percent confidence limit	1.60	
Lower limit	115.42		Lower limit	3.99	
Upper limit	259.57		Upper limit	7.19	

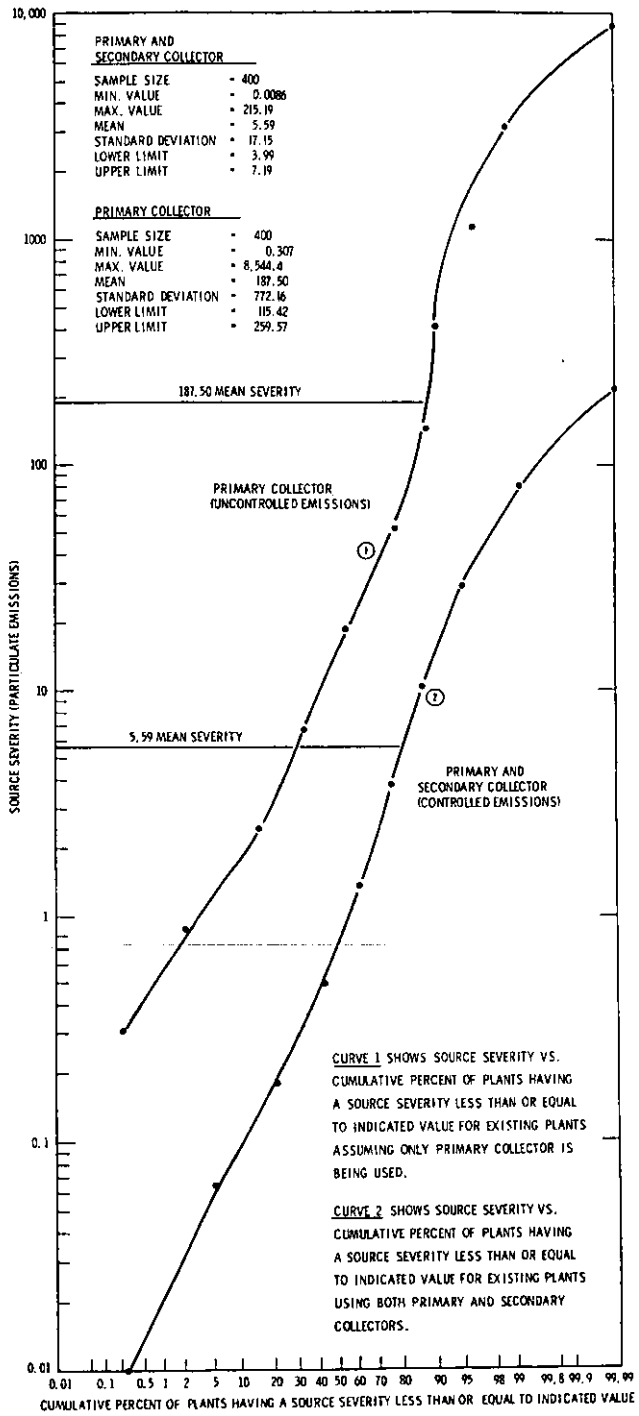

Figure 13. Asphalt hot mix source severity

The total masses of particulate emitted by the asphalt hot mix industry for the years 1967 through 1975 are presented in Figure 14.[16,37-39]

The projected contribution of particulate emissions to total air emissions can be estimated by two methods: (a) worst case and (b) best case. Each of these methods is described briefly below.

a. Worst Case Analysis - Particulate emissions from the asphalt hot mix industry for 1978, for a worst case analysis, were estimated by assuming that the hours of operation and the emission rate will remain constant, and the number of plants was assumed to increase to 4,850 at an annual rate of 4% per year. Therefore, the mass of particulate emissions from the asphalt hot mix industry for 1978 was estimated to be 70,850 metric tons. As shown in Figure 14, particulate emissions for 1973 were 123,000 metric tons.

According to these estimates, the mass of particulate emissions from the asphalt hot mix industry in 1978 for worst case analysis will be 58% of the amount for 1973:

$$\frac{\text{Emissions in 1978}}{\text{Emissions in 1973}} = \frac{70{,}850 \text{ metric tons/yr}}{123{,}000 \text{ metric tons/yr}} = 0.58$$

---

[37] Private correspondence. Asphalt Paving Hot Mix Industry response to Environmental Protection Agency comment. 17 p.

[38] Cavender, J. H., et al. Nationwide Air Pollutant Emission Trends 1940-1970. U.S. Environmental Protection Agency. Office of Air and Water Programs. Research Triangle Park. publication No. AP-115. January 1973. 52 p.

[39] Vandegrift, A. E., et al. Particulate Pollutant System Study. Volume III - Handbook of Emission Properties. Midwest Research Institute, EPA Contract CPA 22-69-104 Kansas City. May 1971. 607 p.

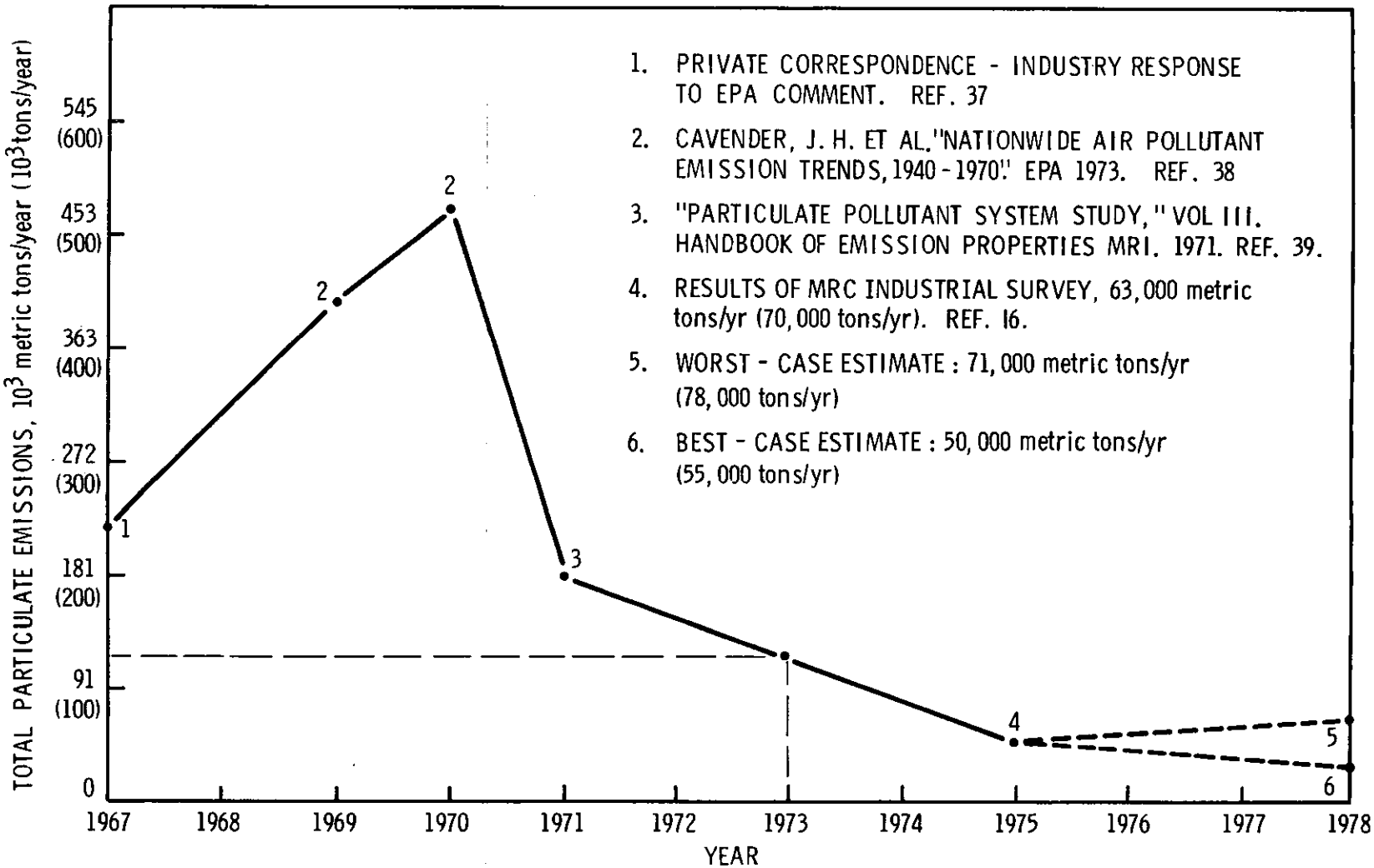

Figure 14. Asphalt hot mix industry particulate emissions[16,37-39]

b. Best Case Analysis - Particulate emissions from the asphalt industry for 1978, for a best case analysis, were calculated by using emission factors determined from available data for 1970, 1971, 1973, and 1975 as shown in Table 22. These emission factors were plotted in Figure 15 and extrapolated to determine the emission factor for 1978, assuming control trends continue to be 0.145 g/kg. Assuming a 4% increase in production through 1978, production was estimated to be 337 x 10^6 metric tons per year. Therefore, the mass of particulate emissions from the asphalt hot mix industry for 1978 were estimated to be 49,000 metric tons.

The mass of particulate emissions from the asphalt hot mix industry in 1978 for best case analysis will be 40% of the amount for 1973:

$$\frac{\text{Emissions in 1978}}{\text{Emissions in 1973}} = \frac{\text{49,000 metric tons/yr}}{\text{123,000 metric tons/yr}} = 0.40$$

Table 22. PARTICULATE EMISSION FACTOR TRENDS FOR ASPHALT HOT MIX INDUSTRY

	Total production[a]		Total emissions[b]		Estimated emission factor	
Year	10^6 metric tons	(10^6 tons)	metric tons	(tons)	g/kg	(lb/ton)
1970	280	(309)	476,300	(525,000)	1.70	(3.40)
1971	288	(317)	181,400	(200,000)	0.63	(1.26)
1972	295	(325)	Not estimated	(Not estimated)	--	(--)
1973	330	(362)	123,000	(135,600)	0.37	(0.74)
1974	319	(352)	Not estimated	(Not estimated)	--	(--)
1975	299	(329)	63,000	(70,000)	0.21	(0.42)

[a]Production values from Section VI.B.

[b]Emissions from Figure 14.

The contribution of asphalt hot mix manufacturing to statewide and nationwide emissions is shown in Tables 23 and 24. The mass emissions of criteria pollutants resulting from

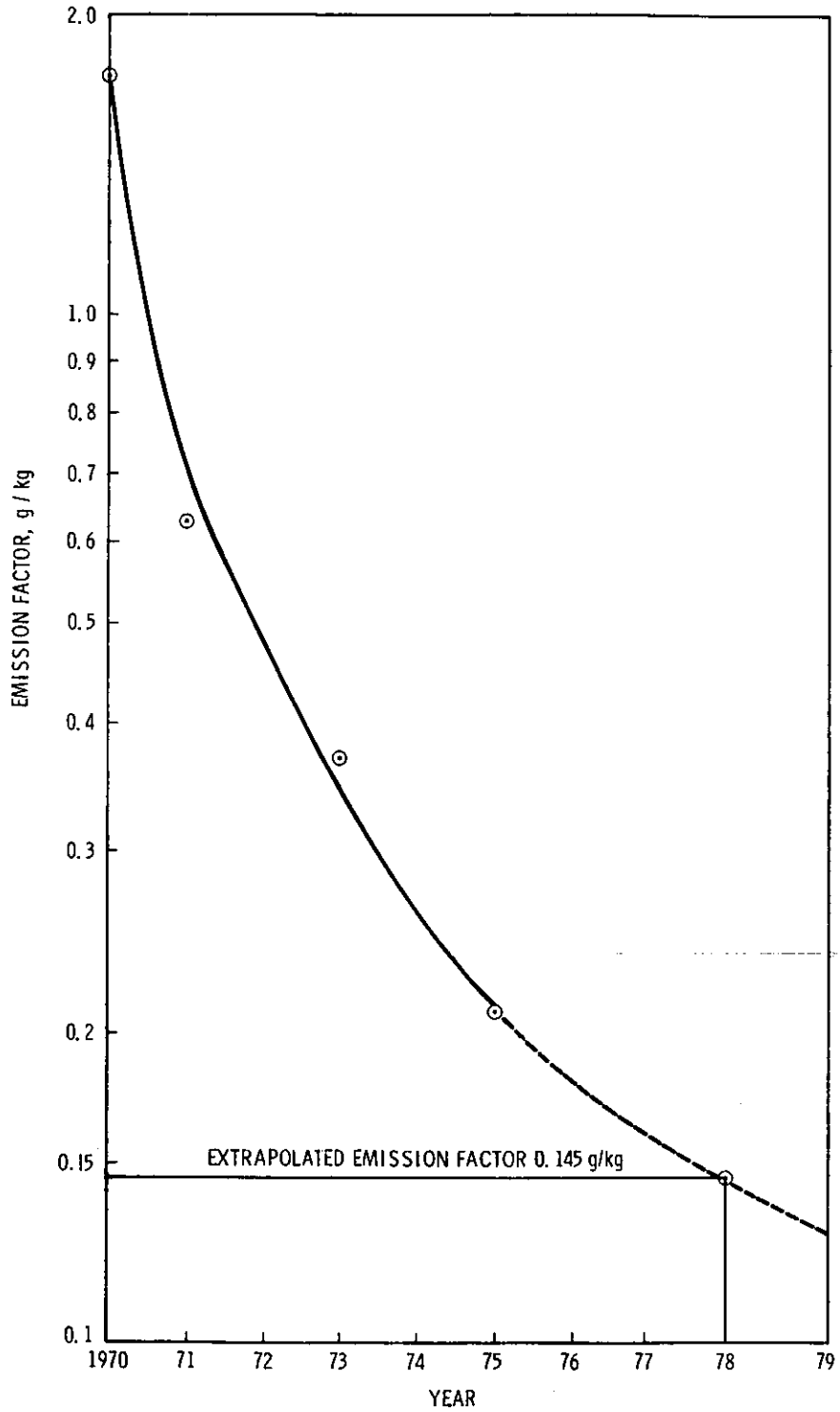

Figure 15. Historical and extrapolated emission factors

Table 23. CONTRIBUTION OF ASPHALT - HOT MIX INDUSTRY TO STATE PARTICULATE EMISSIONS

State	State particulate emissions, 10^3 metric tons/yr	Asphalt hot mix industry emissions	
		Metric tons/yr	Percent contribution
Alabama	1,179	1,295	0.1
Alaska	14	473	3.4
Arizona	73	190	0.3
Arkansas	138	600	0.4
California	1,006	3,601	0.4
Colorado	201	600	0.3
Connecticut	40	789	2.0
Delaware	37	126	0.3
District of Columbia	19	63	0.3
Florida	226	1,816	0.8
Georgia	405	1,311	0.3
Hawaii	62	158	0.3
Idaho	55	427	0.8
Illinois	1,143	3,191	0.3
Indiana	748	2,053	0.3
Iowa	216	1,074	0.5
Kansas	348	963	0.3
Kentucky	546	2,022	0.4
Louisiana	381	1,042	0.3
Maine	49	442	0.9
Maryland	495	1,042	0.2
Massachusetts	96	789	0.8
Michigan	706	2,321	0.3
Minnesota	266	1,801	0.7
Mississippi	168	1,437	0.9
Missouri	202	2,417	1.2
Montana	273	490	0.2
Nebraska	95	584	0.6
Nevada	94	126	0.1

Table 23 (continued). CONTRIBUTION OF ASPHALT HOT MIX INDUSTRY TO STATE PARTICULATE EMISSIONS

State	State particulate emissions, 10^3 metric tons/yr	Asphalt hot mix industry emissions	
		Metric tons/yr	Percent contribution
New Hampshire	15	316	2.1
New Jersey	152	1,847	1.2
New Mexico	103	490	0.5
New York	160	3,348	2.1
North Carolina	481	1,833	0.4
North Dakota	79	300	0.4
Ohio	1,766	4,533	0.3
Oklahoma	94	900	1.0
Oregon	169	869	0.5
Pennsylvania	1,811	4,076	0.2
Rhode Island	13	190	1.5
South Carolina	199	916	0.5
South Dakota	52	490	0.9
Tennessee	410	1,659	0.4
Texas	549	1,517	0.3
Utah	72	284	0.4
Vermont	15	190	1.3
Virginia	477	1,674	0.4
Washington	162	1,122	0.7
West Virginia	214	695	0.3
Wisconsin	412	2,132	0.5
Wyoming	75	379	0.5

Table 24. CONTRIBUTION OF ASPHALT HOT MIX INDUSTRY TO NATIONAL EMISSIONS OF CRITERIA POLLUTANTS

Criteria pollutant	National emissions, 10^6 metric tons/yr	Emissions from asphalt paving hot mix plants, 10^3 metric tons/yr	Percent contribution
Particulates	17.87	63.00	0.35
Sulfur oxides	29.95	13.71	0.05
Nitrogen oxides	22.25	7.65	0.034
Hydrocarbons (as methane equivalent)	25.05	6.03	0.024
Carbon monoxide	96.87	8.22	0.0085

asphalt hot mix manufacture were calculated by multiplying the average emission rate by the average number of hours each plant operates per year and the number of plants in each state. The mass of emissions for all states is shown in Table 23 along with the percent contribution of asphalt hot mix manufacture to the total state emissions. Table 24 gives the contribution of criteria pollutant emissions from asphalt hot mix manufacture to the total emissions of criteria pollutants on a nationwide basis.

3. Affected Population

The population affected by emissions from a typical asphalt hot mix plant was obtained by determining the area exposed to the time-averaged ground level concentration, $\bar{\chi}_{max}$, for which $\bar{\chi}/F > 1.0$. The number of persons within the exposed area was then calculated using the average population density around the typical plant. Table 25 shows the affected area and affected population for a representative asphalt hot mix plant.

Table 25. AFFECTED AREA AND AFFECTED POPULATION FOR SOURCE SEVERITY GREATER THAN OR EQUAL TO 1.0

Parameter for a representative plant	Criteria pollutant	
	Particulate	NO_x
Population density, persons/km^2	397.5	397.5
Emission height, m	10.3	10.3
Emission rate, g/s	6.09	0.78
Primary ambient air quality standard, mg/m^3	0.26	0.1
Affected area, km^2	0.453	0.108
Affected population, persons	180	43

SECTION 5

CONTROL TECHNOLOGY

Pollution control technology in the asphalt hot mix industry consists of two stages: primary and secondary pollution control devices.

The purpose of the primary collector is to recover the larger particulate emissions from the kiln. Table 26 shows particle sizes of material entering and leaving the primary collector. Well designed primary collectors can recover dust greater than 10 μm with approximately 70% efficiency.[17]

Table 26. PARTICLE SIZE DISTRIBUTION BEFORE AND AFTER PRIMARY COLLECTION[13]

Size, μm	Percent less than size shown	
	To primary collector	From primary collector
5	19.5	78.00
10	30.5	96.40
15	38.2	97.50
20	45.1	97.80
25	50.1	97.90
30	55.5	98.03
35	60.0	98.20
40	64.0	98.28
45	67.5	98.40

The primary collectors were initially used to prevent dust nuisance and protect the exhaust fan blades and equipment downstream from the dryer from wear.[17] The primary collector soon proved to be a sound investment as the aggregate it recovered could be recycled. The primary collector cannot meet current particulate emission regulations but considerably eases the load on the secondary collector.

Secondary collectors are used to control emissions to the atmosphere. These collectors are more efficient than primary collectors and are able to remove particles in micron and submicron sizes. Material recovered from the secondary collector may be recycled or discarded depending on economic feasibility. Secondary collectors may be further subdivided into wet and dry types.

An individual survey of the asphalt hot mix industry indicates that primary collectors used are usually dry collectors. Table 27 shows types of primary and secondary collectors used and percent of industry usage.

Table 27. PRIMARY AND SECONDARY CONTROL DEVICES USED IN THE ASPHALT HOT MIX INDUSTRY

Type of control equipment	Percent of industry
Primary collectors	
Settling or expansion chambers	4
Centrifugal dry collectors	58
Multicyclones	35
Other	3
Secondary collectors	
Gravity spray tower	8
Cyclone scrubber	24
Venturi scrubber	16
Orifice scrubber	8
Baghouse	40
Other	3

Figure 16 shows the relative particle size and collection efficiency of different types of control equipment.[20] Figure 17 graphically depicts the variation of collection efficiency of pollution control equipment with particle size.[4]

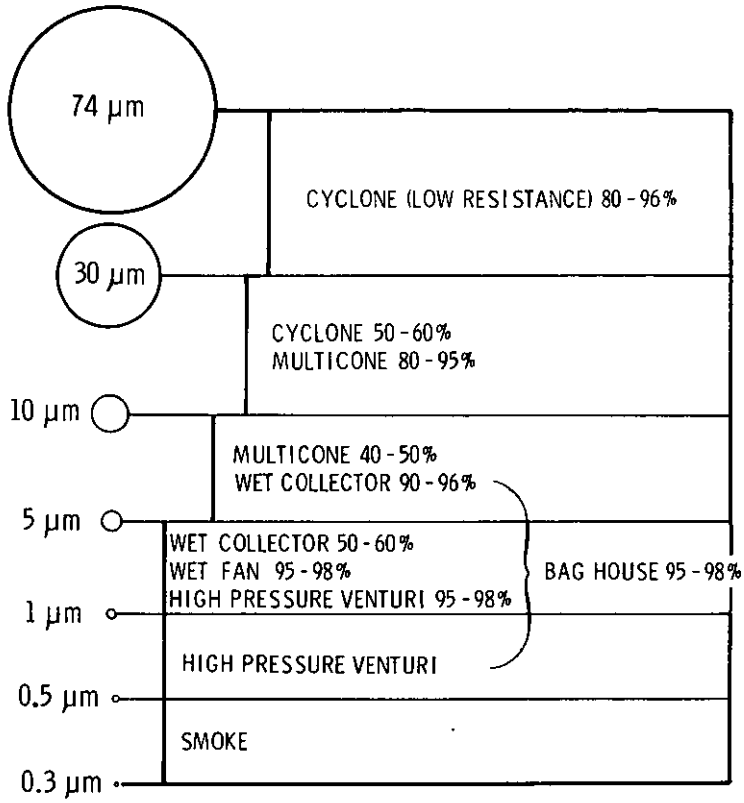

Figure 16. Relative particle size and collection efficiency of control equipment[20]

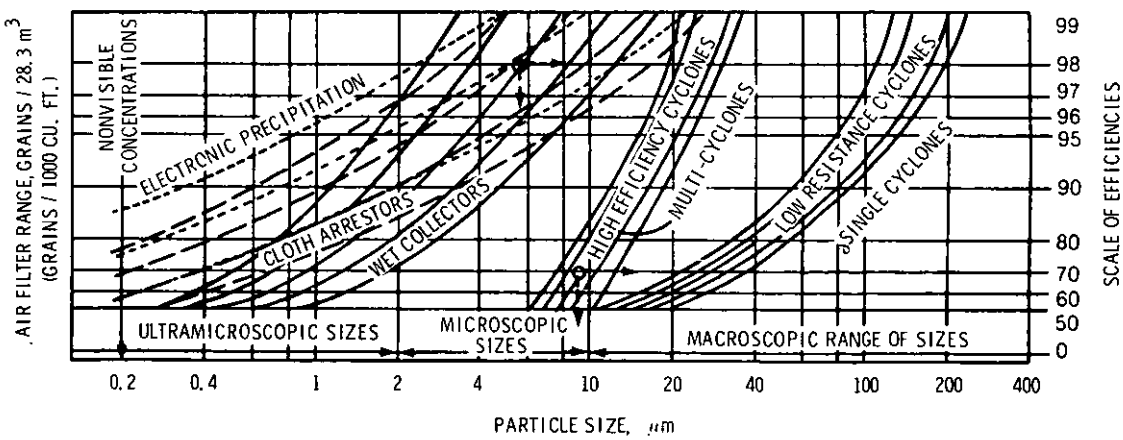

Figure 17. Variation of collection efficiency with particle size[4]

A. PRIMARY COLLECTORS

1. Settling Chambers

The simplest type of primary collector is the settling chamber. Simple in design and operation, as seen in Figure 18, it lowers the velocity of the exhaust gas by expanding the ductwork to a point where it allows airborne particles to reach a terminal settling velocity and settle by gravity.[24,40] Typical velocities within the chamber are between 0.3 m/s and 1.5 m/s.[11] The particles removed from the gas stream are discharged through a valve at the bottom of the chamber to the hot aggregate elevator.

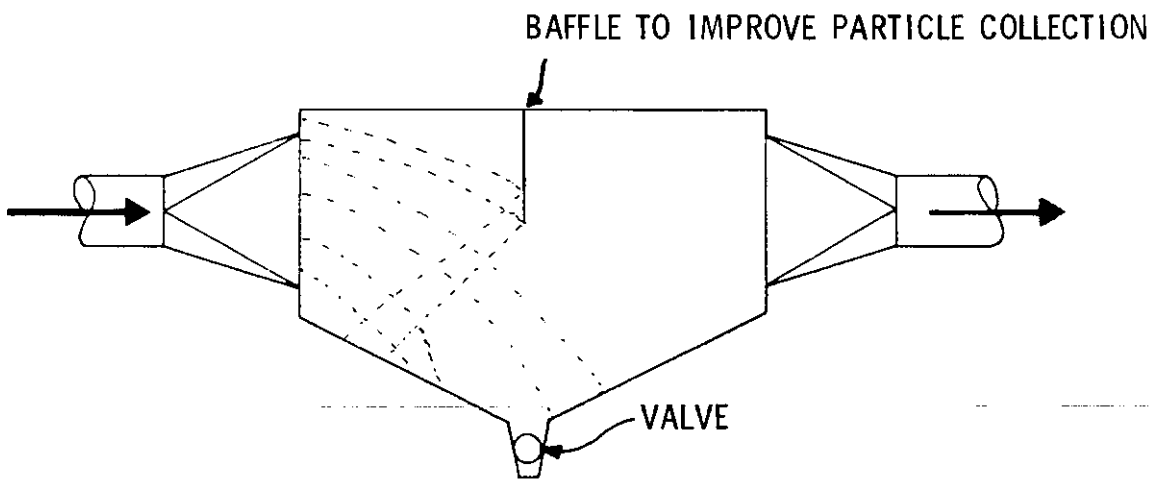

Figure 18. Settling chamber[11,24,40]

Major disadvantages of settling chambers are low collection efficiency for smaller particles and large space requirements. Collection efficiency for a settling chamber is directly proportional to the settling velocity of airborne particles

[40]Control Techniques for Particulate Air Pollutants. U.S. Department of Health, Education, and Welfare. Washington. Publication No. AP-51 (PB 190 253). January 1969. 215 p.

and the length of the chamber, and inversely proportional to the height of the chamber and the velocity of exhaust gas.[11] Higher efficiency may be achieved if baffles or shelves are installed in the chambers.

2. Centrifugal Dry Collectors

Centrifugal dry collectors remove particulate from the gas stream by centrifugal force that is created by imparting a spinning motion to the gas stream through use of a tangential gas inlet, vanes or a fan.[40] Particulate that is denser than the carrier gas is forced against the walls of the cone in a spinning motion. The smaller the cone diameter becomes, the faster the particulate travels. The particulate thus becomes increasingly heavy through centrifugal force as it travels downward in a spiraling path to the bottom of the collector cone.[24]

The forces that act on each particle and determine the path of the particle and the efficiency of the collector during the separation process are gravitational, centrifugal and frictional.[40]

The gravitational force, which causes the particle to settle, is the product of particle mass and acceleration due to gravity. The centrifugal force, which causes separation of the particle in the cyclone, is due to a uniform change in linear velocity because of rotation and is equal to the product of particle mass and centrifugal acceleration.[40]

The ratio of centrifugal force to gravitational force is called the separation factor, and it varies from 5 for large diameter, low resistance cyclones to 2,500 for small diameter, high resistance cyclones.[40]

The frictional drag is due to the relative motion of the particle and gas stream and opposes the centrifugal force on the particle. The frictional drag is directly proportional to the product of drag coefficient, the projected cross-sectional area of the particle density, and the square of the particle velocity relative to the gas stream, and inversely proportional to the acceleration due to gravity.[40]

Collection efficiency of a dry centrifugal collector increases with increasing particle size, particle density, inlet gas velocity, cyclone body length, number of gas revolutions and smoothness of cyclone walls. The collection efficiency decreases with increases in gas viscosity, cyclone diameter, gas outlet duct size and diameter of gas inlet area.[40]

When higher collection efficiency is desired, long body, small diameter, high efficiency cyclones are used. Both long body and small diameter act to increase retention time in the cyclone and exert greater centrifugal force on the particle, resulting in greater separation.[4]

A given cyclone design can fall into more than one class depending on the mode of operation and the particle size being collected.[40]

A typical centrifugal dry collector, a conventional reverse flow tangential inlet cyclone, is shown in Figure 19.

3. Multicyclone

A multicyclone consists of a number of small diameter cyclones operating in parallel. All the cyclones have a common gas inlet and are mounted within a common hopper with one common gate at the hopper bottom to discharge the collected particulate.[24]

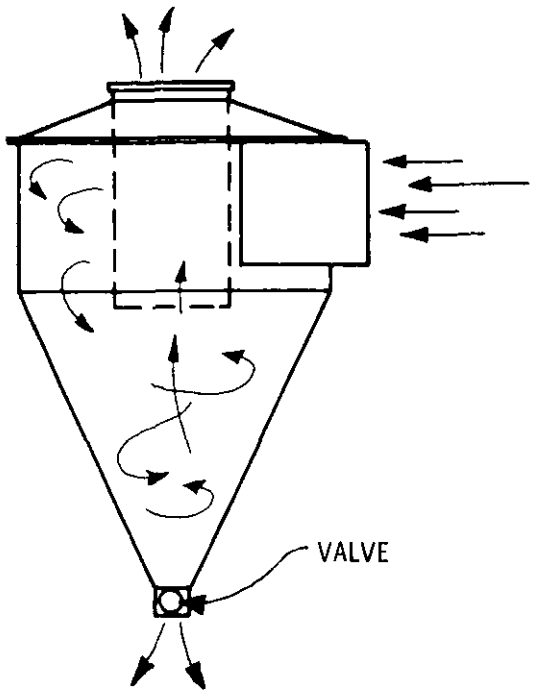

Figure 19. Centrifugal dry collector[24]

The gas stream in the multicyclone, unlike that in the conventional cyclone, enters at the top of the collecting tube and has a swirling action imparted to it by a stationary vane located in its path.[4] Figure 20 shows a multicyclone, and Figure 21 shows an enlargement of the collector element. The collector elements range from 0.05 m to 0.3 m in diameter. Well designed multicyclones have collection efficiencies up to 90% for particles in the 5 μm to 10 μm range.[4]

B. SECONDARY COLLECTORS

1. Wet Scrubbers

Wet scrubbers use a liquid (e.g., water) either to remove particulate matter directly from the gas stream by contact or to improve collection efficiency by preventing reentrainment. In the first of two mechanisms for particle removal fine particles are conditioned to increase their effective

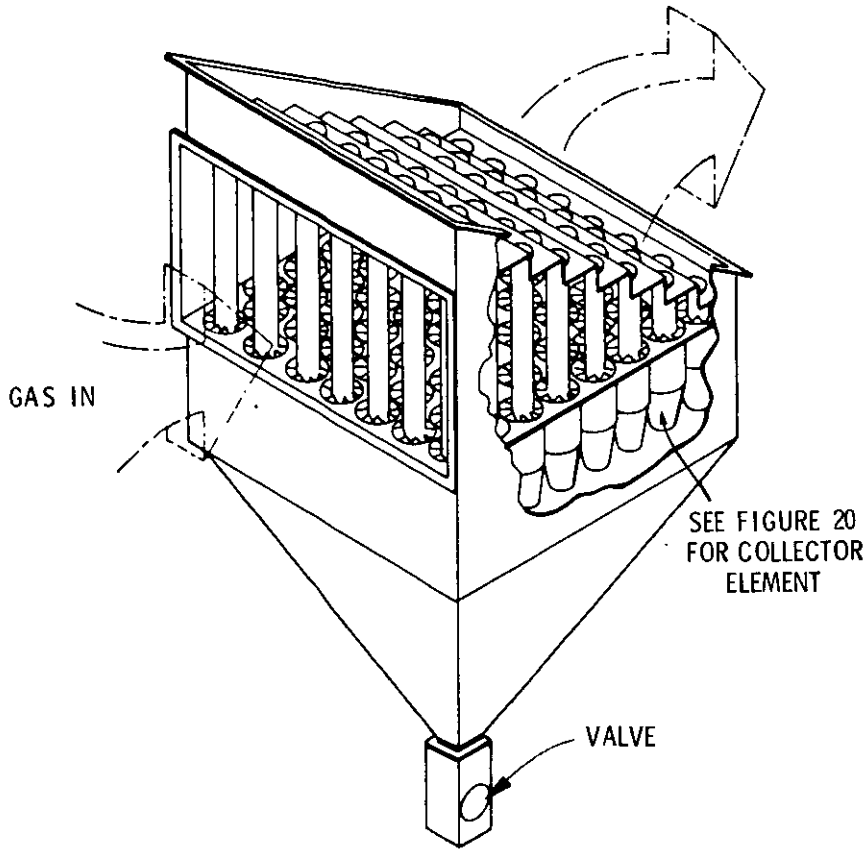

Figure 20. Multicyclone[24]

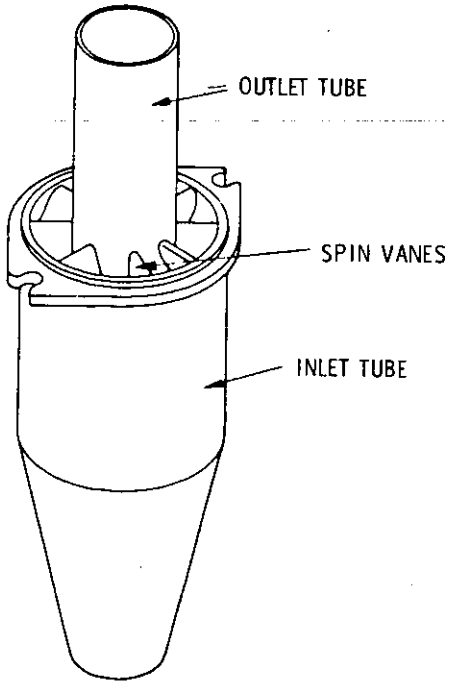

Figure 21. Collector element[24]

size, enabling them to be collected more easily; in the second, the collected particles are trapped in a liquid film and washed away, reducing reentrainment.[40]

The effective particle size may be increased in two ways. First, fine particles can act as condensation nuclei when the vapor passes through its dew point. Condensation can remove only a relatively small amount of dust, since the amount of condensation required to remove high concentrations is usually prohibitive. Second, particles can be trapped on liquid droplets by impact using inertial forces. The following six mechanisms bring particulate matter into contact with liquid droplets:[40]

- Interception occurs when particles are carried by a gas in streamlines around an obstacle at distances which are less than the radius of the particles.
- Gravitational force causes a particle, as it passes an obstacle, to fall from the streamline and settle on the surface of the obstacle.
- Impingement occurs when an object placed in the path of a particle-containing gas stream causes the gas to flow around it. The larger particles tend to continue in a straight path because of inertia and may impinge on the obstacle and be collected.
- Diffusion results from molecular collisions and, hence, plays little part in the separation of particles from a gas stream.
- Electrostatic forces occur when particles and liquid droplets become electrically charged.
- Thermal gradients are important to the removal of matter from a particle-containing gas stream because particulate matter will move from a hot area to a cold area. This motion is caused by unequal gas molecular collision energy on the hot and cold surfaces of the particles and is directly proportional to the temperature gradient.

Wet scrubber efficiencies are compared on the bases of contacting power and transfer units. Contacting power is the useful energy expended in producing contact of the

particulate matter with the scrubbing liquid, and represents pressure head loss across the scrubber, head loss of the scrubbing liquid, sonic energy or energy supplied by a mechanical rotor. The transfer unit (the numerical value of the natural logarithm of the reciprocal of the fraction of the dust passing through the scrubber) is a measure of the difficulty of separation of the particulate matter.[40]

a. Gravity Spray Tower - The simplest type of wet scrubber used in the asphalt hot mix industry is the gravity spray tower. Liquid droplets, produced by either spray nozzles or atomizers, fall downward through a countercurrent gas stream containing particulate matter. To avoid droplet entrainment, the terminal settling velocity of the droplets must be greater than the velocity of the gas stream. Collection efficiency increases with decreasing droplet size and with increasing relative velocity between the droplets and air stream. Since these two conditions are mutually exclusive, the optimum droplet size for maximum efficiency is from 500 μm to 1,000 μm.[40]

The chief disadvantages of gravity spray towers are low scrubbing efficiencies for dust particles in the 1-μm to 2-μm range and large space requirements. Figure 22 shows a typical spray tower.[40]

Exhaust gas entering at the base of the spray tower rises through inlet conditioning sprays, through a distributor plate, through one or more banks of spray nozzles and through a mist eliminator. The mist eliminator is used if gas velocities exceed 2 m/s.[40]

b. Cyclonic Scrubbers - An improvement on the gravity spray tower is the centrifugal spray scrubber (Figure 23). This type of wet scrubber increases the relative velocity between

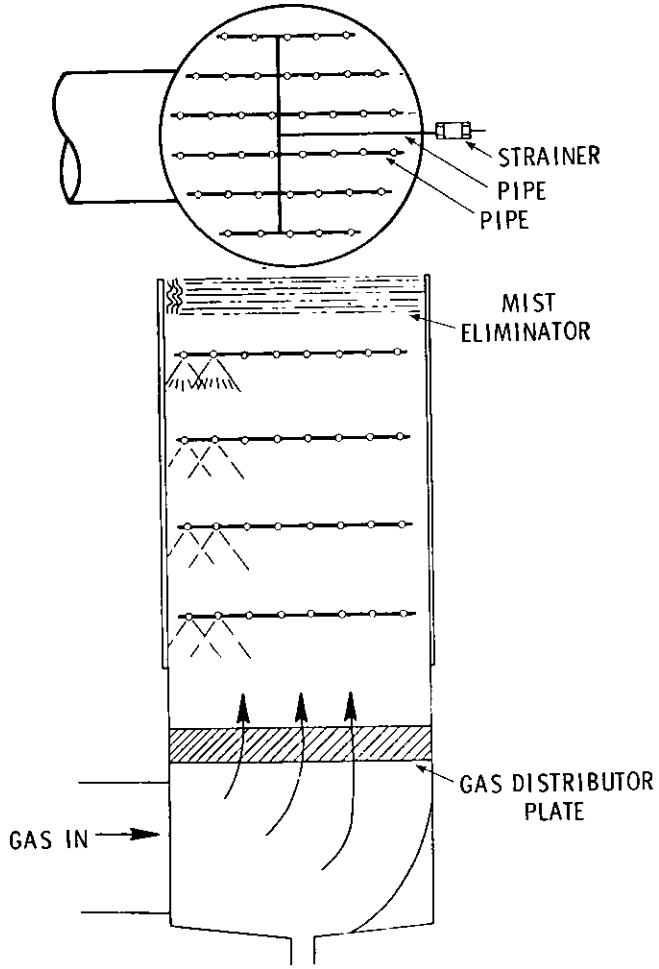

Figure 22. Gravity spray tower[40]

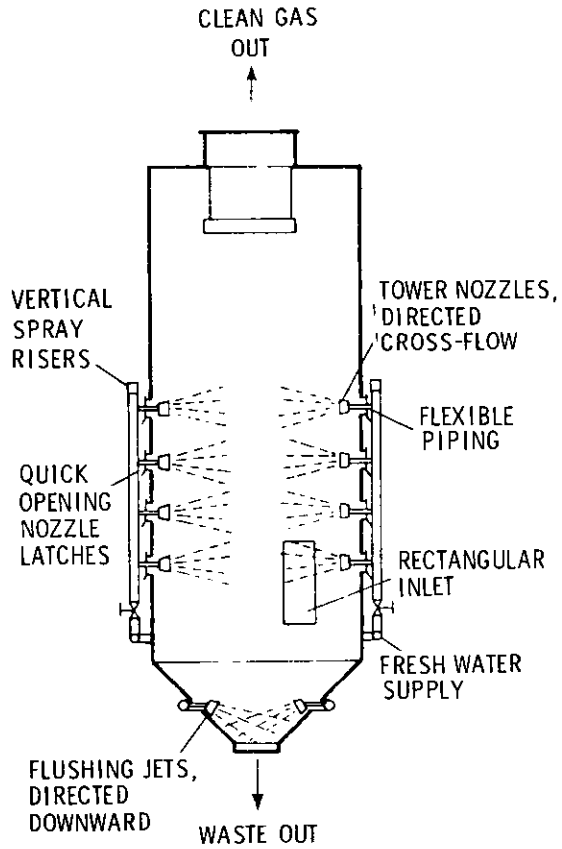

Figure 23. Cyclonic spray scrubber[40]

the droplets and gas stream by using the centrifugal force of a spinning gas stream. The spinning motion may be imparted by tangential entry of either the liquid or gas stream or by the use of fixed vanes and impellers.[40]

These collectors are generally 90% to 96% efficient in the 5-μm to 10-μm size, but drop to 50% to 60% efficiency in the 1-μm to 5-μm range. Pressure drop obtained in the centrifugal scrubber is 0.5 kPa to 1.5 kPa, gas velocity into the collector should be more than 0.5 m/s (100 fpm), and water usage is 2.41×10^{-2} to 8.02×10^{-2} m^3 of water per m^3/s of gas (3 to 10 gal of water/1,000 cfm).[20]

c. Centrifugal Fan Wet Scrubber - This type of scrubber (Figure 24) consists of a multiblade centrifugal blower. Its advantages are low space requirements, moderate power requirements, low water consumption, and a relatively high scrubbing efficiency.[40]

The design pressure drop is about 1.62 kPa with a maximum pressure drop of 2.24 kPa. Water requirements range from 0.60×10^{-2} to 1.2×10^{-2} m^3 of water per m^3/s (0.75 to 1.5 gal of water/1,000 cfm).[40]

d. Venturi Scrubber - The venturi scrubber consists of a convergent section (throat) and a divergent section. Figure 25 is a sectional view of a venturi showing the throat.

Dust laden gases enter the convergent section and are accelerated to a high velocity (61 m/s to 183 m/s)[40] at the throat. Water introduced either into the throat or into the top of the venturi is atomized at the high gas velocity.[20] The energy utilized in the venturi is accounted for by the gas stream pressure drop.

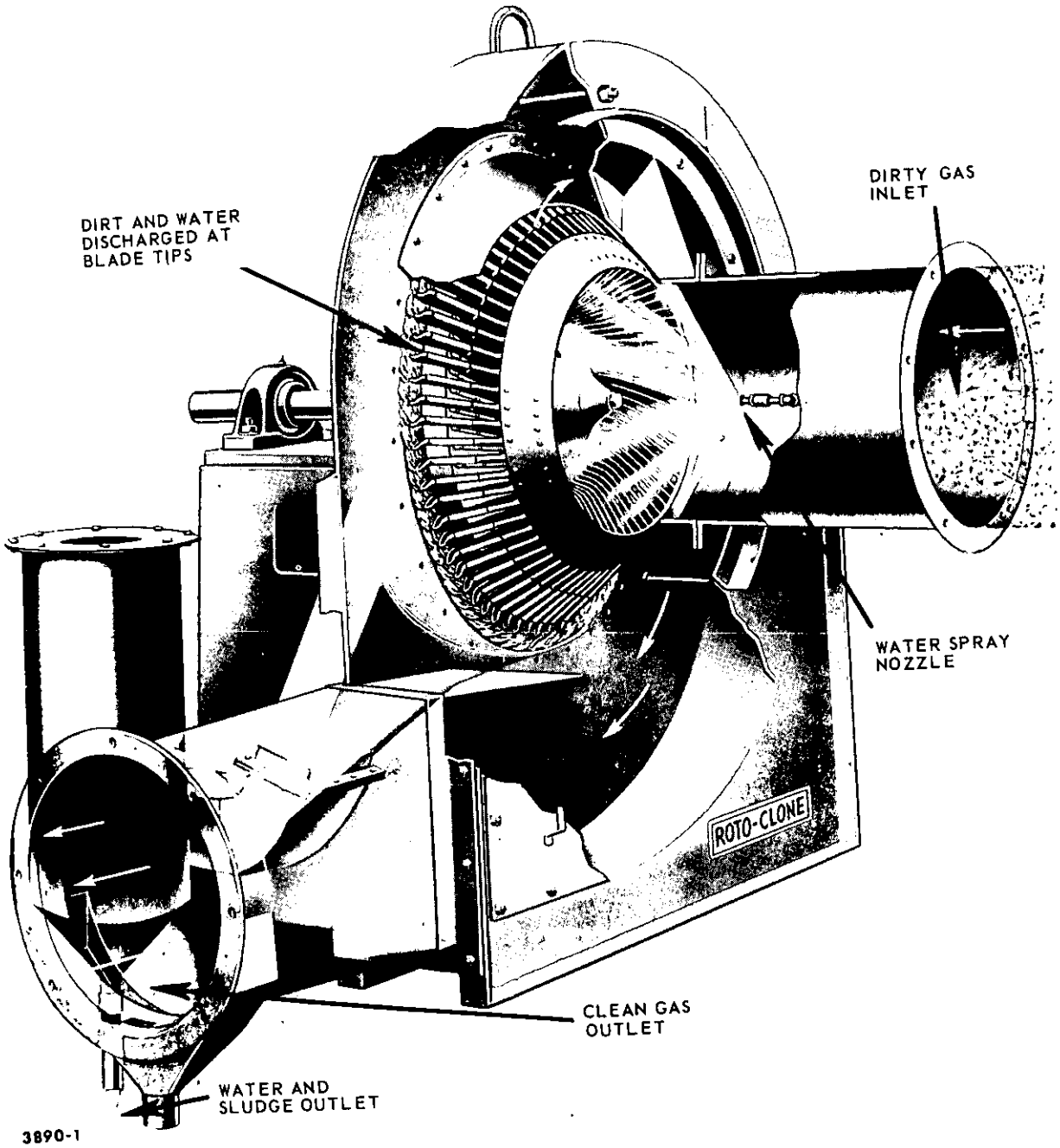

Figure 24. Centrifugal fan wet scrubber[40]

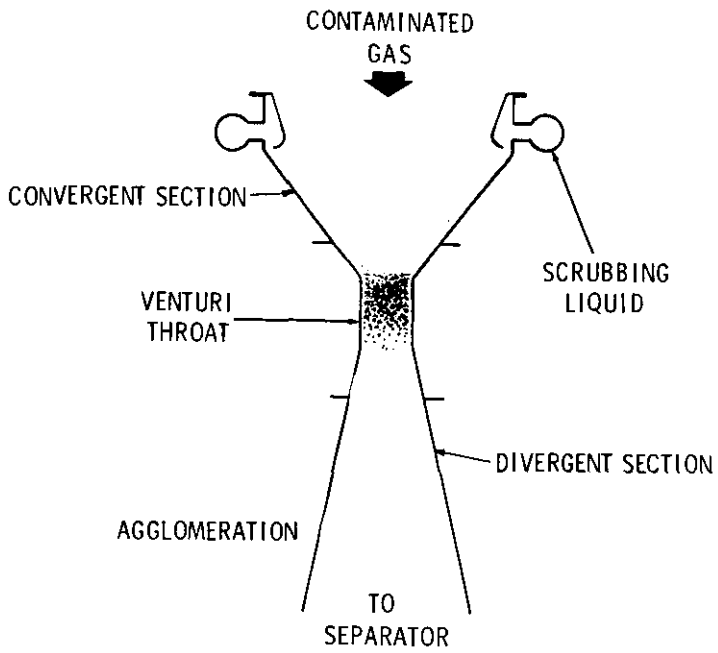

Figure 25. Sectional view of venturi scrubber[20]

Collision between dust particles and water droplets causes dust to be entrapped in the water. Further collision occurs between the water droplets, creating agglomerated droplets of large size.[20]

In the divergent section the gas and dust particles are slowed due to enlarging of the duct, which creates a new velocity differential with additional agglomeration. A change of the gas flow direction in the elbow connecting the venturi and the separator causes further impaction and agglomeration.[20]

The gas and liquid enter the separator, usually a cyclone, and the clean gas leaves the collector through the upper portion of the separator.[20]

Figure 26 shows a typical venturi. Based on 4.98 kPa drop and 1.07×10^{-3} m^3/s of water per m^3/s of gas (8 gpm of water per 1,000 cfm), the venturi has 95% to 98% efficiency for 1-μm to 5-μm range particles and 50% efficiency for 0.5-μm to

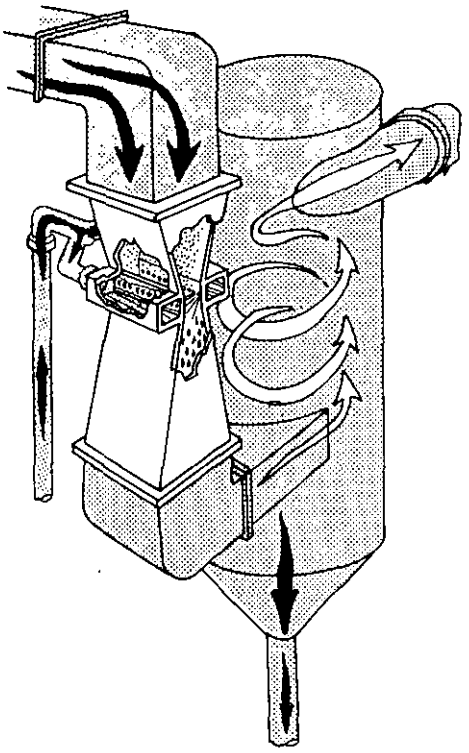

Figure 26. Venturi scrubber[40]

1-μm range particles.[20] Higher efficiencies can be achieved using more water, more power and other design modifications.[20]

e. Orifice Scrubber - In an orifice scrubber (Figure 27) gas is forced through the orifice together with the scrubbing liquid. The turbulence and high gas velocities atomize the droplets, increasing the probability of collision and entrapment of dust particles in water droplets.[24]

Gas and dust laden liquid enter the separator tank where the liquid drains to the bottom while the clean gas exits through the top of the tank.[24]

2. Baghouses (Fabric Filters)

Exhaust gases from the dryer, consisting of air, products of combustion, dust particles and water vapor, are drawn through the baghouse. Particulate is retained on the dirty gas side

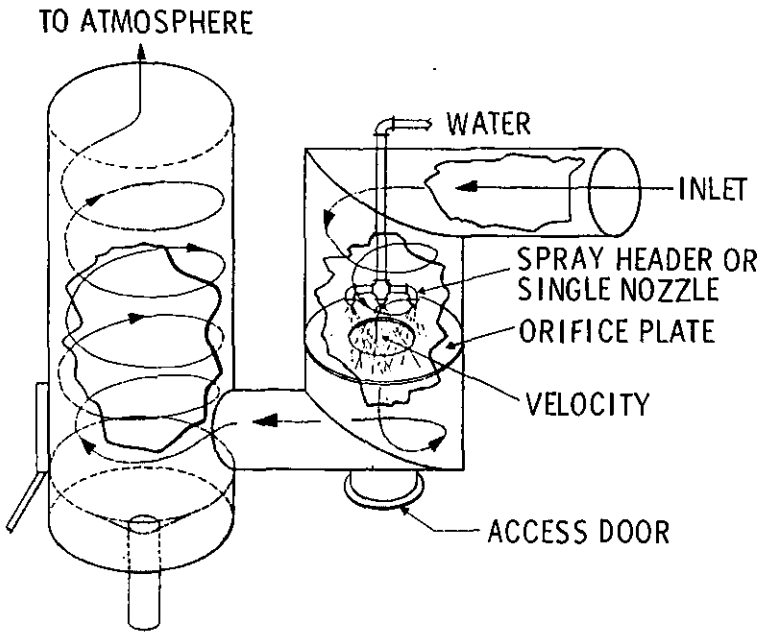

Figure 27. Orifice scrubber[24]

of the filtering medium, the fabric, while the gases pass through the fabric into the clean gas chamber. The "bags" are made of glass, polyesters, Dacron, or Nomex type nylon; they are cylindrical or flat and may be fitted over wire forms called "cages" for support, depending on the direction of gas flow through the bags.[24]

Baghouses can effectively remove particles as small as 0.5 μm and will also remove a substantial quantity of particles in the 0.01-μm range, but, since the space between fabric fibers may be 100 μm or larger, it is obvious that the filtering process is not simple fabric sieving.[40] As the exhaust gases pass through the baghouse, small particles are initially captured and retained on the fabric fiber by direct interception, inertial impact, diffusion, electrostatic attraction and gravitational settling.[11,40] As time passes and more dust particles are deposited, a mat or cake is formed on the fabric, which serves as a supporting structure. Further

removal of dust particles from the exhaust gas is achieved by mat or cake sieving as well as by the above mechanisms. When the mat or cake resistance begins to hinder the air flow required to properly ventilate the dryer, the fabric filter is cleaned by removing the dust cake, which is allowed to fall into the hopper.[20,24,40]

Baghouses fall into two general types - low energy and high energy - depending on construction and type of cleaning procedure used.

a. Low Energy Type Baghouses - Low energy type baghouses are usually compartmented units, wherein the group of bags to be cleaned is isolated from the rest of the baghouse. Each compartment has its own inlet, outlet, hopper and bag housing. One compartment at a time is removed for cleaning. Low energy units generally use a mechanical shaker or reverse air flow for cleaning.[20,40] Figure 28 shows a typical low energy type baghouse.

Exhaust gases pass through the inside of the bags, where the dust is filtered out, as clean gas passes through the bag and out of the system. This structure does not require cages and the bags are self supporting. Generally the bags are made of woven fabrics, although felt fabrics have been used. The air-to-cloth ratio for low energy baghouses is low, ranging from 5.08×10^{-3} m^3/s per m^2 to 2.03×10^{-2} m^3/s per m^2 (1:1 to 4:1 cfm of air/ft^2 of cloth).[20] Only older asphalt plants use low energy baghouses.

b. High Energy Type Baghouses - Since they conserve energy and space and have high collection efficiencies, high energy type baghouses are widely used. Exhaust gases enter through the hopper and flow upwards around the outside of these bags, passing through the fabric from the outside in. Dust

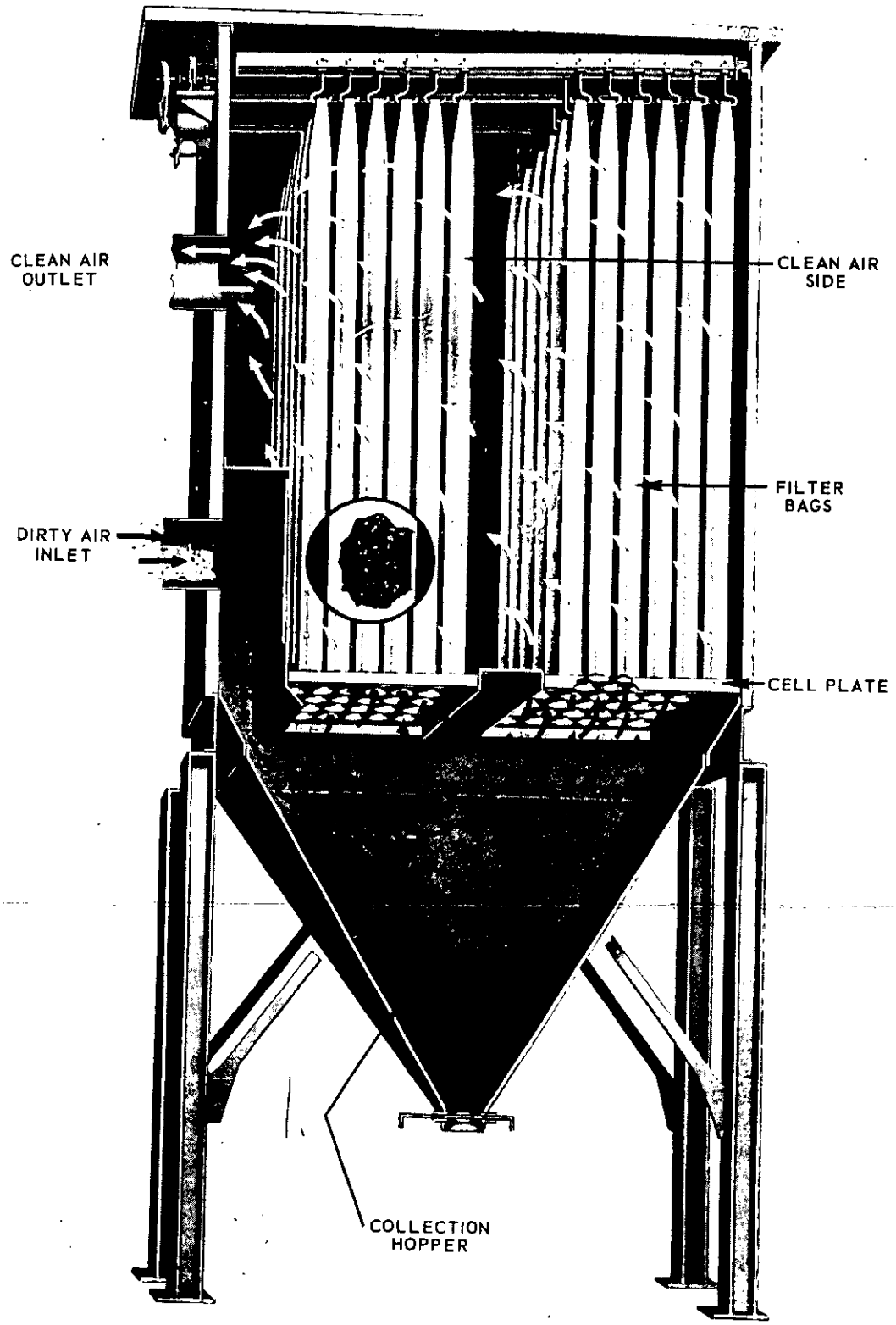

Figure 28. Low energy type baghouse[40]

particles deposit on the outer surface of the bags and clean air moves upwards through the inside and out an open end of the baghouse to an exhaust manifold. In this type of construction cages must support the bags from within to prevent their collapse.[20,24] Figure 29 shows a typical high energy type baghouse.

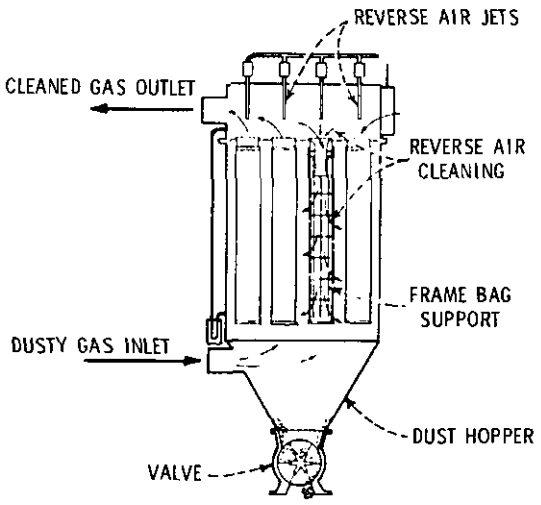

Figure 29. High energy-type baghouse[24]

Bag cleaning is accomplished by using compressed air to sharply reverse the air flow; the shock thus applied disengages the dust cake from the surface of the fabric. High energy baghouses require a sturdy fabric such as felt because of the large energy utilization in cleaning the bags, which repeatedly move on and off the supporting cages. High energy baghouses use a relatively higher air-to-cloth ratio ranging from 2.03×10^{-2} m^3/s per m^2 to 3.56×10^{-2} m^3/s per m^2 (4:1 to 7:1 cfm of air/ft^2 of cloth).[24,40]

The success of both types of baghouses depends upon the fabric and fiber from which the bags are made. New fabrics continue to improve performance of baghouses. Fabrics used currently within the asphalt hot mix industry include: glass yarns treated with lubricants such as silicone to prevent fibers from breaking due to self abrasion during flexing (good for

continuous operation up to 260°C), polyesters (maximum temperature of 132°C), and Nomex type nylon (good for temperatures up to 234°C).[24] A special fabric, glass/Nomex web on a Nomex scrim, has had to be developed for use within the asphalt industry, to meet federal codes.[41]

For optimum operation and long bag life temperature control within the baghouse is essential. High temperature protection devices are required in the exhaust duct entering the baghouse to protect the bags from damage if exhaust gas temperature rises over the operating limit of the bag material. The sensor activates shutoff valves in the burner fuel supply when a preset temperature is reached. Cold air from outside can be pulled in to dilute hot exhaust gases by opening a door in the inlet duct. However, this is avoided as it upsets the combustion process within the dryer, causing fuel and/or soot to deposit on the bags.[20,42]

Exhaust gases from the dryer contain large quantities of water vapor within the 121°C to 177°C temperature range. As long as the exhaust gas temperature within the baghouse remains above dew point (82°C to 100°C), water vapor will not condense. If the temperature of the exhaust gases falls below the dew point, water vapor will condense, mix with the dust and cause plugging of the bags. Therefore, the baghouse should be kept well insulated, and an auxiliary heater should be provided to raise the temperature of the exhaust gases if necessary.[42]

---

[41] Status Summary of Different Industries - Asphalt Plants. Journal of the Air Pollution Control Association. 24:1190-1191, December 1974.

[42] Reigel, S. A., et al. Baghouses - What to Know Before You Buy. Pollution Engineering. May 1973. p. 32-34.

SECTION 6

GROWTH AND NATURE OF THE INDUSTRY

A. PRESENT TECHNOLOGY

Asphalt hot mix production consists of combining dried, heated aggregate with an even coat of hot liquid asphalt cement. This process has remained virtually unchanged for decades.[43] Industry modifications of the process include automation of plant operations, installation of storage silos for hot mix, spraying truck bodies with chemical release agents, and installation of primary and secondary control devices to meet federal emission codes. The industry has progressed during the past 5 years by educating plant personnel to efficient operation of equipment, thereby lowering atmospheric emissions and conserving fuel.[44,45] From a simple mixing operation the asphalt industry is transforming into an organized, responsible, technically oriented industry.

---

[43]Abraham, H. Asphalts and Allied Substances, Fifth Edition. Volume I. New York, D. Van Nostrand Company, Inc., January 1945. 887 p.

[44]Good Housekeeping - Your Responsibility. National Asphalt Pavement Association. Riverdale. Information Series 43. 24 p.

[45]Foster, C. R., and F. Kloiber. Fuel Conservation. National Asphalt Pavement Association. Riverdale. 7 p.

B. INDUSTRY PRODUCTION TRENDS

Asphalt hot mix is used primarily for paving roads, streets and other areas that carry vehicular traffic.[46] Increasing population requires transportation and housing development, construction of new roads and maintenance of old roads. This has resulted in a large demand for asphalt hot mix; consequently, production increased steadily from 1965 through 1973 (see Figure 30) as it had for the past several decades.[46] Asphalt hot mix production declined in 1974, and a further decrease in production is anticipated for 1975. The decrease is a result of sharp price increases for asphalt cements and a slowdown in the home building and construction industry.[46]

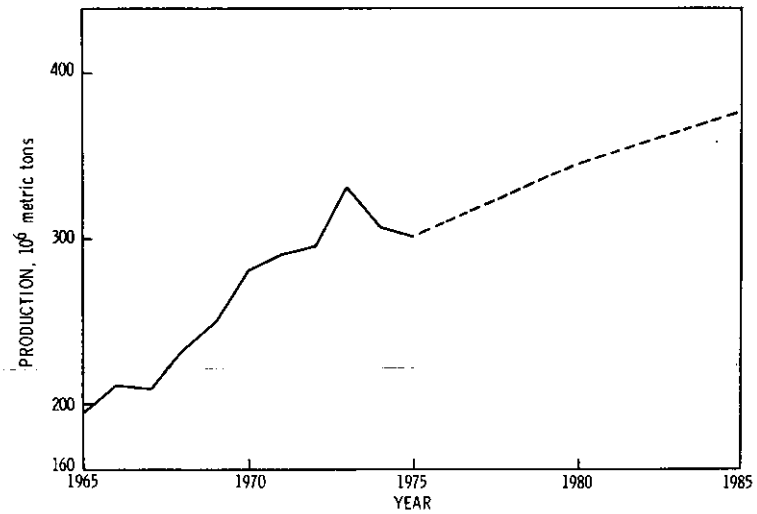

Figure 30. Asphalt hot mix production, 1965-1985[46]

The price of asphalt hot mix increased gradually over the years, but in 1974 (see Figure 31) there was a sharp

[46]Foster, C. R. The Future for Hot-Mix Asphalt Paving. National Asphalt Pavement Association. (Presented at the 1976 International Public Works Congress of the American Public Works Association. New Orleans. September 1975.) 4 p.

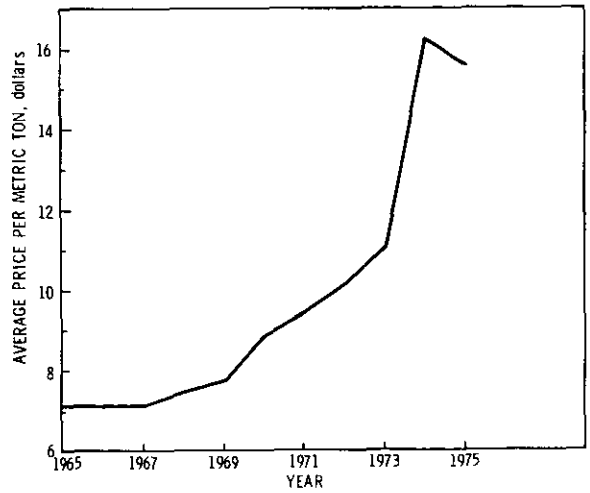

Figure 31. Asphalt hot mix, average price[46]

increase due to the increase in the price of asphalt cement and the inability to obtain quotations for future delivery of asphalt cement.[46] From 1965 through 1970 the average price of asphalt cement was $24.25/metric ton. It averaged $30.86/metric ton between 1971 and 1973. In 1974 it reached $71.65/metric ton and in 1975 it was $76.06/metric ton.[46]

Over the past 5 years highway paving has accounted for an average of 67% of the asphalt hot mix market, parking lot paving for another 28%, and airport and private paving made up the remainder (see Table 28).[3,47-49] New construction has accounted

---

[47]Hot Mix Asphalt - Plant and Production Facts, 1970. National Asphalt Pavement Association. Riverdale. Information Series 35. 24 p.

[48]Hot Mix Asphalt - Plant and Production Facts, 1972. National Asphalt Pavement Association. Riverdale. Information Series 46. 32 p.

[49]Background Information for New Source Performance Standards: Asphalt Concrete Plants, Petroleum Refineries, Storage Vessels, Secondary Lead Smelters and Refineries, Brass and Bronze Ingot Production Plants, Iron and Steel Plants and Sewage Treatment Plants. Volume 3, Promulgated Standards. U.S. Environmental Protection Agency. Research Triangle Park. Report No. EPA-450/2-74-003 (PB 231 601). February 1974. 150 p.

Table 28. ASPHALT HOT MIX - MARKETS [3,47-49]

Year	Percent of market					
	Interstate highways	State highways	Municipal and county roads	Private and commercial	Airports	Others
1970	13	33	24	24	4	2
1971	14	31	24	25	2	4
1972	16	30	21	28	3	2
1973	12	27	25	32	2	2
1974	11	30	25	29	3	2

for 53% of the work load while resurfacing accounted for the remainder (see Table 29). An average of 69% of asphalt hot mix is used as surface binder, 26% as hot mix base, 4% for patching and 2% for other purposes (see Table 30).[3,47-49]

Table 29. ASPHALT HOT MIX BY TYPE OF CONSTRUCTION[3,47-49]

Year	Percent	
	New construction	Resurfacing and maintenance
1970	51	49
1971	54	46
1972	55	45
1973	53	47
1974	54	46

Table 30. ASPHALT HOT MIX BY END USES[3,47-49]

Year	Percent			
	Surface and binder	Hot mix base	Patching	Other
1970	72	23	3	2
1971	70	24	4	2
1972	67	28	4	1
1973	67	27	4	2
1974	67	28	4	1

1. Industry Status

In 1975 there were estimated to be 4,300 asphalt plants in the United States. The asphalt hot mix industry is characterized by its large number of small companies; 38% of the companies operated a single plant while 89% operated five or fewer plants.[16]

About 80% of the operating plants are stationary while the remainder are mobile. Stationary plants are located in urban areas where there is a continuing market for paving and re-surfacing work. Mobile plants are usually involved in highway projects since they can be disassembled and relocated to shorten hauling distances.[49,50]

The average production rate reported was 160 metric tons/hr (176.4 tons/hr) at an average mixer capacity of 2.9 metric tons (3.2 tons/hr).[16] Asphalt hot mix plants usually shut down during the winter months for maintenance and repair. They operate an average of 8.6 months per year and 666 hr/yr.[16] Variable weather conditions, inefficient truck scheduling and the fact that the industry operates on a project basis are factors that contribute to the low operating ratio of this industry.[49]

Approximately 34% of the industry uses gas for fuel while 66% uses oil. No. 2 fuel oil is used by 63% of the oil users in the industry, and 13% of them report using No. 4 oil.[16]

---

[50]Comprehensive Study of Specified Air Pollution Sources to Assess the Economic Impact of Air Quality Standards, Volume I. U.S. Environmental Protection Agency. Research Triangle Park. Report No. FR 41U-649 (PB 222 857). August 1972. 377 p.

2. Competitive Products

The only alternative product to asphalt hot mix currently is portland cement[46,50] which is costlier than asphalt hot mix, based on the quantity required to produce a given volume of pavement. Portland cement accounts for only 10% of all highway mileage constructed but it has been used extensively in the interstate highway system (60% of the mileage). If it becomes necessary for the portland cement industry to provide the service now provided by asphalt hot mix, considerable expansion will be required.[50]

C. OUTLOOK

Asphalt hot mix will be needed in the future for new construction as well as to maintain the 6.1×10^6 km of existing road network. Another 2.1×10^6 km of gravel and stone surface highways need paving, and many existing highways and streets need widening and upgrading.[46]

The population is projected to increase for several years and the current slowdown in housing and transportation development is only a postponement due to economic conditions. The demand will have to be made up in the future.[46]

Barring any oil embargo, asphalt cement supplies for the next several years should be available. An increase in the price of asphalt cement is predicted as it competes with fuel oil for a larger share of the energy barrel.[46]

APPENDICES

APPENDIX A. INDUSTRY SURVEY - SUMMARY OF RESULTS

Table A-1. SUMMARY OF ASPHALT HOT MIX INDUSTRY SURVEY DATA[16]

Question No.	Information requested	Batch process Permanent	Batch process Mobile	Continuous process Permanent	Continuous process Mobile	Dryer drum process Permanent	Dryer drum process Mobile	Overall mean	Standard deviation	95% confidence interval for mean	Range
1	Use by process type	90.8%		6.6%		2.6%		-	-	-	-
2	Plant mobility	76.5%	14.3%	2.3%	4.3%	1.3%	1.3%	Permanent = 80% Mobile = 20%	-	-	-
3	Shut down operations for the Winter	87.7%	69.0%	78.6%	88.5%	50.0%	75.0%	84.2%	-	-	-
4	Percent of plants automated	71.6%	67.8%	71.4%	57.7%	100%	100%	71.2%	-	-	-
5	Average capacity of mixer, metric tons (tons)	2.8 ± 0.12 (3.11 ± 0.13)	3.1 ± 0.29 (3.40 ± 0.32)	3.0 ± 1.51 (3.31 ± 1.67)	2.6 ± 0.81 (2.90 ± 0.89)	3.0 ± 1.30 (3.33 ± 1.43)	7.3 (8)	2.9 (3.2)	1.3 (1.43)	±0.11 (±0.12)	0.5 - 9.1 (0.55 - 10.03)
6a	Average production rate, metric tons/hr (tons/hr)	150 ± 6.8 (169 ± 7.5)	180 ± 20.5 (194 ± 22.6)	120 ± 24.6 (132 ± 27.1)	190 ± 34.8 (210 ± 38.3)	240 ± 102 (264 ± 112.4)	190 ± 85.6 (296 ± 94.4)	160 (176.4)	76 (83.8)	±6 (±6.6)	13 - 480 (14.3 - 529)
6b	Average production rate, 10^3 metric tons/yr (10^3 tons/yr)	100 ± 6.6 (114 ± 7.3)	95 ± 13.7 (105 ± 15.1)	97 ± 43.6 (107 ± 48.1)	160 ± 56.3 (172 ± 62.1)	200 ± 120 (222 ± 132.3)	130 ± 77 (145 ± 84.9)	110 (121.3)	73 (80.5)	±6 (±6.6)	9 - 410 (9.9 - 452)
7	Number of months the plant operates per year	8.9 ± 0.20	7.7 ± 0.64	8.8 ± 1.1	7.0 ± 0.85	8.6 ± 2.1	7.4 ± 2.0	8.6	2	±0.2	1.5 - 12
8	Average stack height, m (ft)	10.6 ± 0.4 (35 ± 1.3)	9.1 ± 0.8 (30 ± 2.6)	9.8 ± 2.3 (32.2 ± 7.5)	9.2 ± 1.7 (30.1 ± 5.4)	11.3 ± 4.5 (37.1 ± 14.6)	6.1 ± 1.4 (20.1 ± 4.7)	10.3 (33.7)	4.0 (13.2)	±0.3 (1.1)	0 - 34 (0 - 110)
9	Aggregate composition										
	Gravel	21%	31%	13%	41%	29%	50%	24%	-	-	-
	Sand	35%	28%	33%	30%	29%	25%	33%	-	-	-
	Stone	19%	17%	13%	15%	-	13%	18%	-	-	-
	Limestone	20%	19%	33%	11%	42%	13%	20%	-	-	-
	Slag	3%	2%	7%	4%	-	-	30%	-	-	-
	Other	2%	2%	-	-	-	-	2%	-	-	-
10	Grades of asphalt used										
	AC-3	1%	3%	-	-	-	-	-	-	-	-
	AC-5	2%	3%	-	5%	-	-	-	-	-	-
	AC-6	0.3%	-	-	-	-	-	-	-	-	-
	AC-8	0.3%	-	10%	-	-	-	-	-	-	-
	AC-10	11%	11%	20%	5%	25%	11%	12%	-	-	-
	AC-20	42%	28%	40%	20%	38%	11%	39%	-	-	-
	AC-40	1%	1%	-	-	-	-	-	-	-	-
	AC-120	1%	-	-	-	-	-	-	-	-	-
	AC-250	1%	1%	-	-	-	-	-	-	-	-
	AC-2000	1%	-	-	5%	-	-	-	-	-	-
	60-70	2%	4%	-	10%	13%	-	-	-	-	-
	70-85	1%	1%	10%	-	-	-	-	-	-	-
	85-100	16%	22%	20%	45%	25%	22%	20%	-	-	-
	120-150	2%	6%	-	5%	-	11%	-	-	-	-
	Others	18%	19%	-	5%	-	44%	-	-	-	-
11	Type of fuel used										
	Gas	39%	6%	55%	28%	71%	0%	34%	-	-	-
	Oil	61%	94%	45%	72%	29%	100%	66%	-	-	-
12	Grades of fuel oil used										
	No 2 oil	66%	55%	88%	56%	67%	29%	63%	-	-	-
	No 3 oil	0.3%	2%	12%	-	-	-	1%	-	-	-
	No 4 oil	14%	12%	-	-	-	14%	13%	-	-	-
	No 5 oil	5%	18%	-	18%	33%	14%	8%	-	-	-
	No 6 oil	3%	5%	-	-	-	14%	3%	-	-	-
	Other	12%	7%	-	25%	-	29%	12%	-	-	-
13	Type of release agent used										
	Kerosene	4%	11%	-	8%	-	14%	5%	-	-	-
	Fuel oil	53%	60%	46%	71%	75%	43%	55%	-	-	-
	Chemical[a]	42%	25%	54%	21%	25%	29%	38%	-	-	-
	None	1%	4%	-	-	-	14%	2%	-	-	-
14	Percent having storage facilities for hot mix	40%	29%	36%	50%	88%	75%	40%	-	-	-

[a]A typical chemical release agent consists of 20% silicone solids in 80% naphtha.

Table A-1 (continued). SUMMARY OF ASPHALT HOT MIX INDUSTRY SURVEY DATA[16]

Question No.	Information requested	Batch process		Continuous process		Dryer drum process		Overall mean	Standard deviation	95% confidence interval for mean	Range
		Permanent	Mobile	Permanent	Mobile	Permanent	Mobile				
15	Average capacity of storage facility, metric tons (tons)	270 ± 25.8 (301 ± 28.4)	130 ± 38.3 (145 ± 42.2)	210 ± 135.6 (230 ± 149.5)	90 ± 11.3 (99 ± 12.4)	220 ± 153 (246 ± 168.3)	96 ± 63 (106 ± 69.5)	240 (264)	170 (184)	±21 (±24)	36 - 1100 (40 - 1200)
16	Percent using a primary collector	93%	86%	100%	73%	63%	50%	90%	-	-	-
17	Type of primary collector										
	Settling chamber	3%	8%	7%	-	17%	40%	4%	-	-	-
	Cyclone	62%	44%	50%	48%	50%	40%	58%	-	-	-
	Multicyclone	32%	44%	43%	48%	17%	-	35%	-	-	-
	Other	2%	4%	-	5%	17%	20%	3%	-	-	-
18	Percent using secondary collector	98%	98%	100%	92%	75%	75%	97%	-	-	-
19	Type of secondary collector										
	Gravity spray tower	9%	9%	-	8%	14%	-	8%	-	-	-
	Cyclone scrubber	23%	27%	21%	20%	14%	60%	24%	-	-	-
	Venturi scrubber	16%	19%	14%	8%	43%	40%	16%	-	-	-
	Orifice scrubber	7%	10%	21%	4%	14%	-	8%	-	-	-
	Baghouse	42%	31%	43%	56%	14%	-	40%	-	-	-
	Other	3%	3%	-	4%	-	-	3%	-	-	-
20	Percent using tertiary collector	7%	10%	0%	10%	50%	0%	8%	-	-	-
21	Percent using settling pond	61%	68%	64%	32%	63%	63%	61%	-	-	-
22	Percent recycling water	41%	60%	43%	42%	57%	50%	44%	-	-	-
23	Percent recycling fines collected from secondary collector	55%	43%	50%	64%	43%	29%	53%	-	-	-
24	Percent covering hot mix with tarpaulin during haul	82%	81%	92%	76%	57%	43%	81%	-	-	-
25	Percent controlling emissions from the asphalt storage tanks	10%	8%	14%	4%	0%	0%	9%	-	-	-
26	Percent using recycled crankcase oil as fuel	7%	6%	0%	12%	13%	38%	7%	-	-	-
28	Additional control devices										
	Paved/sprinkled yards	0.9%	-	7%	-	-	-				
	Waste dust bins	0.2%	-	-	-	-	-				
	Fugitive fan (for dust)	3.4%	-	-	-	-	-				
	Blue smoke system	4.5%	-	-	-	-	-				
	Two stage multicyclone	0.2%	-	-	-	-	-				
	Bag collector	0.7%	-	-	-	-	-				
	Baghouse	2.4%	2.3%	-	-	-	-				
	Wet fan	4.1%	-	-	3.9%	12.5%	-				
	Wet wash (prewash)	1.7%	1.2%	-	-	12.5%	-				
	Stockpile sprinklers	0.7%	5.8%	-	7.7%	-	-				
	Spray tubes	-	-	-	-	-	-				
	Mist eliminator	0.2%	-	-	-	-	-				
	Spray tower	1.1%	-	-	-	-	-				
	Cyclone scrubber	0.7%	-	-	-	-	-				
	Double scrubber	-	-	-	11.5%	-	12.5%				
	Wet scrubber	0.7%	1.2%	-	-	-	-				
	Venturi scrubber	0.9%	2.3%	-	-	-	-				
	Dynamic precipitator	0.2%	-	-	-	-	-				
	Mixed gas incinerator	0.2%	-	-	-	-	-				
27	Company frequency distribution	Number of plants		Number of companies		Percent distribution					
		1		123		38%					
		2 - 5		166		51%					
		6 - 10		24		7%					
		10 - 20		6		2%					
		Over 21		4		1%					

APPENDIX B. RESULTS FROM REPRESENTATIVE PLANT SAMPLED BY MRC

Table B-1. POM ANALYSIS DATA, INLET RUN NO. 1 (nanograms)

POM component	Front half sample	Back half sample	Total POM present
Dibenzothiophene	9,700	<100	<9,800
Anthracene/phenanthrene	19,900	630	20,530
Methylanthracenes/phenanthrenes	12,000	1,010	13,010
9-Methylanthracene	13,900	<100	<14,000
Fluoranthene	9,800	<100	<9,900
Pyrene	6,500	<100	<6,600
Benzo(c)phenanthrene	800	<100	<900
Chrysene/benz(a)anthracene	3,200	<100	<3,300
7,12-Dimethylbenz(a)anthracene	<2,000	<100	<2,100
3,4-Benzofluoranthene	1,400	<100	<1,500
Benzo(a)pyrene/benzo(e)pyrene/perylene	600	<100	<700
3-Methylcholanthrene	6,300	<100	<6,400
Dibenz(a,h)anthracene	<500	<100	<600
Indeno(1,2,3-c,d)pyrene	<500	<100	<600
7H-Dibenzo(c,g)carbazole	<500	<100	<600
Dibenzo(a,h & a,i)pyrene	<500	<100	<600
TOTAL	<88,100	<3,040	<91,140

Table B-2. POM ANALYSIS DATA, INLET RUN NO. 2 (nanograms)

POM component	Front half sample	Back half sample	Total POM present
Dibenzothiophene	21,700	<250	<21,950
Anthracene/phenanthrene	37,100	1,900	39,000
Methylanthracenes/phenanthrenes	68,100	1,000	69,100
9-Methylanthracene	12,700	<250	<12,950
Fluoranthene	6,300	<250	<6,550
Pyrene	4,600	<250	<4,850
Benzo(c)phenanthrene	560	260	820
Chrysene/benz(a)anthracene	3,100	<250	<3,350
7,12-Dimethylbenz(a)anthracene	<2,000	<250	<2,250
3,4-Benzofluoranthene	410	330	740
Benzo(a)pyrene/benzo(e)pyrene/perylene	350	<250	<600
3-Methylcholanthrene	2,600	<250	<2,850
Dibenz(a,h)anthracene	170	<250	<420
Indeno(1,2,3-c,d)pyrene	210	<250	<460
7H-Dibenzo(c,g)carbazole	<2,000	<250	<2,250
Dibenzo(a,h & a,i)pyrene	240	<250	<490
TOTAL	<162,140	<6,490	<168,630

Table B-3. POM ANALYSIS DATA, MIXER DUCT RUN NO. 1
(nanograms)

POM component	Front half sample	Back half sample	Total POM present
Dibenzothiophene	492,500	20,600	513,100
Anthracene/phenanthrene	560,000	25,760	585,760
Methylanthracenes/phenanthrenes	293,500	31,440	324,940
9-Methylanthracene	<1,000	<1,000	<2,000
Fluoranthene	4,600	2,000	6,600
Pyrene	10,500	1,930	12,430
Benzo(c)phenanthrene	<1,000	<100	<1,100
Chrysene/benz(a)anthracene	28,200	210	28,410
7,12-Dimethylbenz(a)anthracene	<1,000	<100	<1,100
3,4-Benzofluoranthene	1,900	<100	<2,000
Benzo(a)pyrene/benzo(e)pyrene/perylene	1,900	130	2,030
3-Methylcholanthrene	<1,000	<100	<1,100
Dibenz(a,h)anthracene	<1,000	<100	<1,100
Indeno(1,2,3-c,d)pyrene	<1,000	170	<1,170
7H-Dibenzo(c,g)carbazole	<1,000	<100	<1,100
Dibenzo(a,h & a,i)pyrene	<1,000	<100	<1,100
TOTAL	<1,401,100	<83,940	<1,485,040

Table B-4. POM ANALYSIS DATA, MIXER DUCT RUN NO. 2
(nanograms)

POM component	Front half sample	Back half sample	Total POM present
Dibenzothiophene	354,200	49,300	403,500
Anthracene/phenanthrene	330,300	40,400	370,700
Methylanthracenes/phenanthrenes	<184,600	39,300	<223,900
9-Methylanthracene	<2,400	<500	<2,900
Fluoranthene	7,100	1,900	9,000
Pyrene	<8,400	2,500	<10,900
Benzo(c)phenanthrene	<10,000	<500	<10,500
Chrysene/benz(a)anthracene	<14,600	<500	<15,100
7,12-Dimethylbenz(a)anthracene	<2,000	<500	<2,500
3,4-Benzofluoranthene	<3,400	1,000	<4,400
Benzo(a)pyrene/benzo(e)pyrene/perylene	<2,000	<500	<2,500
3-Methylcholanthrene	<2,000	<500	<2,500
Dibenz(a,h)anthracene	<2,000	<500	<2,500
Indeno(1,2,3-c,d)pyrene	<2,000	<500	<2,500
7H-Dibenzo(c,g)carbazole	<2,000	<500	<2,500
Dibenzo(a,h & a,i)pyrene	<2,000	<500	<2,500
TOTAL	<929,000	<139,400	<1,068,400

Table B-5. POM ANALYSIS DATA, MIXER DUCT RUN NO. 3
(nanograms)

POM component	Front half sample	Back half sample	Total POM present
Dibenzothiophene	582,900	3,540	586,440
Anthracene/phenanthrene	575,800	6,420	582,220
Methylanthracenes/phenanthrenes	367,000	20,630	387,630
9-Methylanthracene	<1,000	<1,000	<2,000
Fluoranthene	7,100	550	7,650
Pyrene	11,800	640	12,440
Benzo(c)phenanthrene	<1,000	<100	<1,100
Chrysene/benz(a)anthracene	22,500	110	22,610
7,12-Dimethylbenz(a)anthracene	<1,000	<100	<1,100
3,4-Benzofluoranthene	3,200	<100	<3,300
Benzo(a)pyrene/benzo(e)pyrene/perylene	<1,300	120	<1,420
3-Methylcholanthrene	<1,200	<100	<1,300
Dibenz(a,h)anthracene	<1,000	<100	<1,100
Indeno(1,2,3-c,d)pyrene	<1,000	<100	<1,100
7H-Dibenzo(c,g)carbazole	<1,000	<100	<1,100
Dibenzo(a,h & a,i)pyrene	<1,000	<100	<1,100
TOTAL	<1,579,800	<33,810	<1,613,610

Table B-6. POM ANALYSIS DATA, OUTLET RUN NO. 1
(nanograms)

POM component	Front half sample	Back half sample	Total POM present
Dibenzothiophene	10,900	1,550	12,450
Anthracene/phenanthrene	9,500	2,180	11,680
Methylanthracenes/phenanthrenes	16,000	1,950	17,950
9-Methylanthracene	1,700	<100	<1,800
Fluoranthene	1,600	<100	<1,700
Pyrene	900	160	1,060
Benzo(c)phenanthrene	<500	<100	<600
Chrysene/benz(a)anthracene	2,400	<100	<2,500
7,12-Dimethylbenz(a)anthracene	<500	<100	<600
3,4-Benzofluoranthene	<500	<100	<600
Benzo(a)pyrene/benzo(e)pyrene/perylene	<500	<100	<600
3-Methylcholanthrene	600	<100	<700
Dibenz(a,h)anthracene	<500	<100	<600
Indeno(1,2,3-c,d)pyrene	<500	<100	<600
7H-Dibenzo(c,g)carbazole	<500	<100	<600
Dibenzo(a,h & a,i)pyrene	<500	<100	<600
TOTAL	<47,600	<7,040	<54,640

Table B-7. POM ANALYSIS DATA, OUTLET RUN NO. 2
(nanograms)

POM component	Front half sample	Back half sample	Total POM present
Dibenzothiophene	9,500	<250	<9,750
Anthracene/phenanthrene	8,900	1,200	10,100
Methylanthracenes/phenanthrenes	17,400	1,400	18,800
9-Methylanthracene	<500	<250	<750
Fluoranthene	800	300	1,100
Pyrene	900	700	1,600
Benzo(c)phenanthrene	<500	<250	<750
Chrysene/benz(a)anthracene	<500	<250	<750
7,12-Dimethylbenz(a)anthracene	<500	<250	<750
3,4-Benzofluoranthene	<500	1,300	<1,800
Benzo(a)pyrene/benzo(e)pyrene/perylene	<500	<250	<750
3-Methylcholanthrene	<500	<250	<750
Dibenz(a,h)anthracene	<500	<250	<750
Indeno(1,2,3-c,d)pyrene	<500	<250	<750
7H-Dibenzo(c,g)carbazole	<500	<250	<750
Dibenzo(a,h & a,i)pyrene	<500	<250	<750
TOTAL	<43,000	<7,650	<50,650

Table B-8. POM ANALYSIS DATA, OUTLET RUN NO. 3
(nanograms)

POM component	Front half sample	Back half sample	Total POM present
Dibenzothiophene	7,500	<100	<7,600
Anthracene/phenanthrene	9,800	720	10,520
Methylanthracenes/phenanthrenes	17,600	2,740	20,340
9-Methylanthracene	<500	<100	<600
Fluoranthene	2,000	490	2,490
Pyrene	2,300	1,890	4,190
Benzo(c)phenanthrene	<500	<100	<600
Chrysene/benz(a)anthracene	600	150	750
7,12-Dimethylbenz(a)anthracene	<500	<100	<600
3,4-Benzofluoranthene	900	<100	<1,000
Benzo(a)pyrene/benzo(e)pyrene/perylene	700	<100	<800
3-Methylcholanthrene	<500	<100	<600
Dibenz(a,h)anthracene	500	<100	<600
Indeno(1,2,3-c,d)pyrene	<500	<100	<600
7H-Dibenzo(c,g)carbazole	<500	360	<860
Dibenzo(a,h & a,i)pyrene	<500	<100	<600
TOTAL	<45,400	<7,350	<52,750

Table B-9. POM SAMPLING INPUT DATA FOR RUN 1I

TT 104.3	PB 29.92	VM 60.410	VW 14.4
CO2 3.4	O2 16.3	N2 80.3	CO 0.0
DN 0.294	MF 0.09	MT 0.09	DS 52.5
PM -6.500	CP 0.850		

DELH	TM1	TM2	TS	DELP
0.900	51.0	50.0	144.0	0.550
0.890	55.0	52.0	144.0	0.540
1.280	66.0	64.0	169.0	0.770
1.200	64.0	65.0	156.0	0.800
1.100	63.0	64.0	157.0	0.800
1.250	76.0	71.0	162.0	0.760
1.250	74.0	74.0	195.0	1.000
1.420	75.0	75.0	168.0	0.850
1.580	74.0	75.0	188.0	0.950
1.320	78.0	77.0	156.0	0.800
1.320	79.0	78.0	167.0	0.800
1.620	78.0	80.0	158.0	1.100
1.400	75.0	77.0	154.0	0.850
1.400	76.0	77.0	178.0	0.850
1.400	77.0	77.0	174.0	0.850
1.420	76.0	77.0	176.0	0.880
1.500	78.0	75.0	157.0	0.930
1.400	79.0	76.0	160.0	0.850
1.410	79.0	76.0	166.0	0.870
1.400	78.0	76.0	169.0	0.850
1.470	82.0	77.0	200.0	0.900
1.500	80.0	77.0	195.0	0.970

TT = Time duration of run, min

CO2 = Percent CO_2

DN = Probe tip diameter, cm

PM = Stack pressure (static), cm H_2O

PB = Barometric pressure, cm Hg

O2 = Percent O_2

MF = Particulate (front), mg

CP = Pitot coefficient

VM = Volume of dry gas (meter conditions), dry m^3

N2 = Percent N_2

MT = Particulate (total), mg

VW = Total H_2O collected, ml

CO = Percent CO

DS = Stack diameter, cm

DELH = Average orifice pressure drop, cm H_2O

TM1 = Average gas meter temperature, °C

TM2 = Average gas meter temperature, °C

TS = Stack temperature, °C

DELP = Average stack velocity head, cm H_2O

Table B-10. POM SAMPLING INPUT DATA FOR RUN 2I

TT 115.0	PB 29.99	VM 63.270	VW 14.7
CO2 3.4	O2 16.3	N2 80.3	CO 0.0
DN 0.204	MF 0.16	MT 0.17	DS 52.5
PM -6.000	CP 0.850		

DELH	TM1	TM2	TS	DELP
1.280	46.0	44.0	195.0	0.780
1.280	48.0	45.0	210.0	0.780
1.220	47.0	47.0	178.0	0.750
1.340	50.0	48.0	186.0	0.820
1.230	52.0	49.0	164.0	0.750
1.390	53.0	50.0	160.0	0.850
1.390	53.0	52.0	161.0	0.850
1.550	54.0	53.0	189.0	0.940
1.220	56.0	55.0	184.0	0.750
1.580	57.0	55.0	185.0	0.950
1.580	59.0	58.0	188.0	0.950
1.580	60.0	59.0	171.0	0.950
1.310	63.0	60.0	165.0	0.800
1.310	67.0	65.0	164.0	0.800
1.310	66.0	66.0	176.0	0.800
1.370	68.0	67.0	178.0	0.830
1.420	73.0	70.0	197.0	0.870
1.390	74.0	72.0	213.0	0.850
1.330	75.0	73.0	217.0	0.820
1.300	79.0	77.0	180.0	0.840
1.300	81.0	79.0	213.0	0.840
1.300	87.0	84.0	214.0	0.840
1.330	88.0	85.0	221.0	0.820

TT = Time duration of run, min

CO2 = Percent CO_2

DN = Probe tip diameter, cm

PM = Stack pressure (static), cm H_2O

PB = Barometric pressure, cm Hg

O2 = Percent O_2

MF = Particulate (front), mg

CP = Pitot coefficient

VM = Volume of dry gas (meter conditions), dry m^3

N2 = Percent N_2

MT = Particulate (total), mg

VW = Total H_2O collected, ml

CO = Percent CO

DS = Stack diameter, cm

DELH = Average orifice pressure drop, cm H_2O

TM1 = Average gas meter temperature, °C

TM2 = Average gas meter temperature, °C

TS = Stack temperature, °C

DELP = Average stack velocity head, cm H_2O

Table B-11. POM SAMPLING INPUT DATA FOR RUN 1M

TT 118.0	PB 29.95	VM 64.090	VW -5.6
CO2 0.0	O2 29.7	N2 80.3	CO 0.0
DN 0.204	MF 1.40	MT 1.48	DS 8.0
PM -6.000	CP 0.850		

DELH	TM1	TM2	TS	DELP
1.100	64.0	62.0	175.7	2.110
1.200	65.0	63.0	175.7	2.110
1.200	66.0	63.0	175.7	2.110
1.100	66.0	63.0	175.7	2.110
1.100	67.0	64.0	175.7	2.110
0.810	67.0	65.0	175.0	2.110
0.920	65.0	64.0	175.7	2.110
0.920	66.0	65.0	166.0	2.110
0.900	66.0	64.0	175.7	2.110
0.890	67.0	65.0	175.7	2.110
0.830	67.0	64.0	173.0	2.110
0.820	68.0	66.0	175.7	2.110
0.910	68.0	67.0	175.7	2.110
0.920	69.0	65.0	162.0	2.110
0.910	70.0	68.0	175.7	2.110
0.910	71.0	69.0	175.7	2.110
0.870	72.0	68.0	190.0	2.110
0.880	73.0	69.0	175.7	2.110
0.900	73.0	68.0	175.7	2.110
0.850	73.0	69.0	175.7	2.110
0.810	74.0	71.0	175.7	2.110
1.100	74.0	69.0	188.0	2.110
0.940	75.0	74.0	175.7	2.110
0.890	72.0	73.0	175.7	2.110

TT = Time duration of run, min

CO2 = Percent CO_2

DN = Probe tip diameter, cm

PM = Stack pressure (static), cm H_2O

PB = Barometric pressure, cm Hg

O2 = Percent O_2

MF = Particulate (front), mg

CP = Pitot coefficient

VM = Volume of dry gas (meter conditions), dry m^3

N2 = Percent N_2

MT = Particulate (total), mg

VW = Total H_2O collected, ml

CO = Percent CO

DS = Stack diameter, cm

DELH = Average orifice pressure drop, cm H_2O

TM1 = Average gas meter temperature, °C

TM2 = Average gas meter temperature, °C

TS = Stack temperature, °C

DELP = Average stack velocity head, cm H_2O

Table B-12. POM SAMPLING INPUT DATA FOR RUN 2M

TT 135.0	PB 29.80	VM 59.310	VW -5.4
CO2 0.0	O2 29.7	N2 80.3	CO 0.0
DN 0.204	MF 1.08	MT 1.21	DS 8.0
PM -6.000	CP 0.850		

DELH	TM1	TM2	TS	DELP
0.580	65.0	59.0	144.0	1.500
0.550	67.0	60.0	152.8	1.900
0.530	67.0	61.0	132.0	2.000
0.580	66.0	64.0	152.8	1.900
0.580	66.0	64.0	152.8	2.000
0.580	66.0	65.0	152.8	2.300
0.580	67.0	64.0	152.8	2.500
0.690	66.0	63.0	172.0	2.200
0.680	66.0	64.0	152.8	2.300
0.680	67.0	65.0	152.8	2.200
0.680	66.0	65.0	152.8	2.000
0.680	66.0	66.0	152.8	2.200
0.460	71.0	67.0	168.0	2.000
0.470	72.0	68.0	152.8	2.000
0.480	72.0	69.0	152.8	1.900
0.720	75.0	74.0	152.8	1.300
0.680	77.0	75.0	152.8	1.500
0.680	79.0	75.0	152.8	1.500
0.650	77.0	75.0	152.8	1.400
0.640	79.0	77.0	143.0	1.450
0.660	79.0	77.0	152.8	1.700
0.650	80.0	78.0	152.8	1.600
0.630	81.0	79.0	143.0	1.500
0.620	83.0	80.0	152.8	1.600
0.610	83.0	81.0	157.0	1.600
0.630	82.0	81.0	152.0	2.800
0.630	82.0	81.0	160.0	2.900
0.630	82.0	81.0	157.0	2.900

TT = Time duration of run, min

CO2 = Percent CO_2

DN = Probe tip diameter, cm

PM = Stack pressure (static), cm H_2O

PB = Barometric pressure, cm Hg

O2 = Percent O_2

MF = Particulate (front), mg

CP = Pitot coefficient

VM = Volume of dry gas (meter conditions), dry m^3

N2 = Percent N_2

MT = Particulate (total), mg

VW = Total H_2O collected, ml

CO = Percent CO

DS = Stack diameter, cm

DELH = Average orifice pressure drop, cm H_2O

TM1 = Average gas meter temperature, °C

TM2 = Average gas meter temperature, °C

TS = Stack temperature, °C

DELP = Average stack velocity head, cm H_2O

Table B-13. POM SAMPLING INPUT DATA FOR RUN 3M

TT 100.0	PB 29.74	VM 61.770	VW -5.7
CO2 0.0	O2 29.7	N2 80.3	CO 0.0
DN 0.204	MF 1.58	MT 1.61	DS 8.0
PM -6.000	CP 0.850		

DELH	TM1	TM2	TS	DELP
1.300	60.0	59.0	80.0	1.700
1.200	61.0	60.0	129.0	1.900
1.200	62.0	60.0	131.0	1.900
1.200	63.0	61.0	140.0	1.900
1.200	64.0	61.0	155.0	2.000
1.200	64.0	62.0	137.0	2.600
1.200	65.0	62.0	148.0	2.100
1.200	67.0	63.0	152.0	2.000
1.200	66.0	64.0	153.0	1.800
1.200	67.0	64.0	162.0	2.900
1.200	67.0	64.0	164.0	2.700
1.200	67.0	65.0	157.0	2.000
1.300	67.0	65.0	166.0	2.100
1.200	68.0	66.0	160.0	2.700
1.200	68.0	66.0	142.0	2.000
1.200	70.0	67.0	156.0	2.600
1.200	71.0	68.0	158.0	2.200
1.200	72.0	69.0	150.0	3.100
1.200	72.0	69.0	150.0	3.200
1.200	71.0	70.0	160.0	3.200

TT = Time duration of run, min

CO2 = Percent CO_2

DN = Probe tip diameter, cm

PM = Stack pressure (static), cm H_2O

PB = Barometric pressure, cm Hg

O2 = Percent O_2

MF = Particulate (front), mg

CP = Pitot coefficient

VM = Volume of dry gas (meter conditions), dry m^3

N2 = Percent N_2

MT = Particulate (total), mg

VW = Total H_2O collected, ml

CO = Percent CO

DS = Stack diameter, cm

DELH = Average orifice pressure drop, cm H_2O

TM1 = Average gas meter temperature, °C

TM2 = Average gas meter temperature, °C

TS = Stack temperature, °C

DELP = Average stack velocity head, cm H_2O

Table B-14. POM SAMPLING INPUT DATA FOR RUN 10

TT 108.2	PB 29.92	VM 45.560	VW 89.0
CO2 3.4	O2 16.3	N2 80.3	CO 0.0
DN 0.245	MF 0.05	MT 0.05	DS 69.0
PM -0.100	CP 0.850		

DELH	TM1	TM2	TS	DELP
0.440	53.0	53.0	112.0	0.120
0.440	53.0	53.0	119.0	0.120
0.280	56.0	55.0	118.0	0.080
0.280	56.0	56.0	116.0	0.080
0.260	57.0	57.0	117.0	0.080
0.260	57.0	56.0	115.0	0.080
0.210	58.0	57.0	118.0	0.080
0.220	66.0	66.0	105.0	0.060
0.220	67.0	66.0	99.0	0.060
0.700	68.0	67.0	95.0	0.200
0.180	69.0	68.0	97.0	0.050
0.220	69.0	69.0	91.0	0.060
0.440	70.0	70.0	96.0	0.120
0.280	70.0	71.0	103.0	0.080
0.700	71.0	72.0	102.0	0.200
1.600	72.0	72.0	102.0	0.180
1.600	75.0	73.0	98.0	0.180
1.600	76.0	75.0	100.0	0.180
1.600	77.0	75.0	103.0	0.180
1.600	75.0	75.0	113.0	0.180
1.600	76.0	76.0	106.0	0.180

TT = Time duration of run, min

CO2 = Percent CO_2

DN = Probe tip diameter, cm

PM = Stack pressure (static), cm H_2O

PB = Barometric pressure, cm Hg

O2 = Percent O_2

MF = Particulate (front), mg

CP = Pitot coefficient

VM = Volume of dry gas (meter conditions), dry m^3

N2 = Percent N_2

MT = Particulate (total), mg

VW = Total H_2O collected, ml

CO = Percent CO

DS = Stack diameter, cm

DELH = Average orifice pressure drop, cm H_2O

TM1 = Average gas meter temperature, °C

TM2 = Average gas meter temperature, °C

TS = Stack temperature, °C

DELP = Average stack velocity head, cm H_2O

Table B-15. POM SAMPLING INPUT DATA FOR RUN 20

TT 110.0	PB 29.99	VM 67.090	VW 131.1
CO2 3.4	O2 16.3	N2 80.3	CO 0.0
DN 0.245	MF 0.04	MT 0.05	DS 69.0
PM -0.109	CP 0.850		

DELH	TM1	TM2	TS	DELP
1.900	54.0	52.0	112.0	0.180
1.900	51.0	52.0	108.0	0.180
1.900	51.0	51.0	105.0	0.180
1.900	51.0	51.0	105.0	0.180
1.500	51.0	51.0	106.0	0.180
1.500	53.0	52.0	102.0	0.180
1.500	53.0	53.0	103.0	0.180
1.400	53.0	53.0	103.0	0.180
1.400	54.0	54.0	94.0	0.180
1.500	55.0	55.0	112.0	0.180
1.600	55.0	55.0	99.0	0.180
1.300	56.0	53.0	102.0	0.180
1.400	56.0	56.0	114.0	0.180
1.600	57.0	56.0	102.0	0.180
1.200	57.0	57.0	105.0	0.180
1.400	58.0	57.0	102.0	0.180
1.300	58.0	58.0	108.0	0.180
1.500	60.0	59.0	98.0	0.180
1.100	60.0	60.0	105.0	0.180
1.100	62.0	61.0	114.0	0.180
1.400	63.0	63.0	113.0	0.180
1.400	65.0	63.0	114.0	0.180
1.200	66.0	64.0	114.0	0.180
1.100	65.0	64.0	113.0	0.180
1.300	68.0	68.0	104.0	0.180
1.150	68.0	68.0	117.0	0.180
1.000	71.0	71.0	115.0	0.180
1.000	71.0	71.0	114.0	0.180

TT = Time duration of run, min

CO2 = Percent CO_2

DN = Probe tip diameter, cm

PM = Stack pressure (static), cm H_2O

PB = Barometric pressure, cm Hg

O2 = Percent O_2

MF = Particulate (front), mg

CP = Pitot coefficient

VM = Volume of dry gas (meter conditions), dry m^3

N2 = Percent N_2

MT = Particulate (total), mg

VW = Total H_2O collected, ml

CO = Percent CO

DS = Stack diameter, cm

DELH = Average orifice pressure drop, cm H_2O

TM1 = Average gas meter temperature, °C

TM2 = Average gas meter temperature, °C

TS = Stack temperature, °C

DELP = Average stack velocity head, cm H_2O

Table B-16. POM SAMPLING INPUT DATA FOR RUN 30

TT 120.0	PB 29.95	VM 60.610	VW 116.4
CO2 3.4	O2 16.3	N2 80.3	CO 0.0
DN 0.372	MF 0.04	MT 0.05	DS 69.0
PM -0.100	CP 0.850		

DELH	TM1	TM2	TS	DELP
0.630	66.0	66.0	117.0	0.160
0.600	67.0	67.0	115.0	0.180
0.570	70.0	70.0	116.0	0.160
0.600	70.0	70.0	111.0	0.170
0.600	70.0	70.0	113.0	0.170
0.590	71.0	71.0	112.0	0.160
0.590	71.0	71.0	112.0	0.170
0.600	72.0	71.0	105.0	0.170
0.560	74.0	73.0	114.0	0.180
0.610	73.0	72.0	115.0	0.160
0.600	74.0	71.0	117.0	0.160
0.600	73.0	73.0	121.0	0.160
0.590	75.0	74.0	128.0	0.160
0.580	75.0	74.0	123.0	0.160
0.610	76.0	76.0	119.0	0.150
0.600	77.0	77.0	111.0	0.150
0.590	78.0	77.0	110.0	0.150
0.590	79.0	78.0	114.0	0.150
0.570	80.0	80.0	113.0	0.130
0.570	80.0	80.0	118.0	0.140
0.570	79.0	79.0	121.0	0.140
0.570	80.0	80.0	119.0	0.130
0.570	81.0	81.0	120.0	0.140
0.550	82.0	82.0	126.0	0.120

TT = Time duration of run, min

CO2 = Percent CO_2

DN = Probe tip diameter, cm

PM = Stack pressure (static), cm H_2O

PB = Barometric pressure, cm Hg

O2 = Percent O_2

MF = Particulate (front), mg

CP = Pitot coefficient

VM = Volume of dry gas (meter conditions), dry m^3

N2 = Percent N_2

MT = Particulate (total), mg

VW = Total H_2O collected, ml

CO = Percent CO

DS = Stack diameter, cm

DELH = Average orifice pressure drop, cm H_2O

TM1 = Average gas meter temperature, °C

TM2 = Average gas meter temperature, °C

TS = Stack temperature, °C

DELP = Average stack velocity head, cm H_2O

Table B-17a. POM SAMPLING DATA SUMMARY (metric units)

ABBR	DESCRIPTION (20 DEG C)	UNITS	1I	2I
TT	DURATION OF RUN	MINUTES	104.3	115.0
PB	BAROMETRIC PRESSURE	CM HG	76.00	76.17
DELH	AVG ORIFICE PRESS DROP	CM H2O	3.398	3.484
VM	VOL DRY GAS(METER CON)	DCM	1.711	1.792
TM	AVG GAS METER TEMP	DEG C	22.7	16.9
VMSTD	VOL DRY GAS (STD COND)	DNCM	1.70	1.82
VW	TOTAL H2O COLLECTED	ML	14.4	14.7
VWG	VOL H2O VAPOR(STD CON)	NCM	0.019	0.020
PCNTM	PERCNT MOISTURE BY VOL		1.12	1.07
MD	MOLE FRACTION DRY GAS		0.989	0.989
CO2	PERCENT CO2		3.4	3.4
O2	PERCENT O2		16.3	16.3
N2	PERCENT N2		80.3	80.3
MWD	MOL WT OF DRY GAS		29.2	29.2
MW	MOL WT OF STACK GAS		29.1	29.1
DELP	AVG STACK VELOCITY HEAD	CM H2O	2.138	2.124
CP	PITOT COEFFICIENT		0.850	0.850
TS	STACK TEMPERATURE	DEG C	75.	86.
PM	STACK PRESSURE(STATIC)	CM H2O	-15.24	-15.24
PS	STACK PRESSURE (ABS)	CM HG	74.88	75.05
VS	AVG STACK GAS VELOCITY	MPM	1041.	1054.
DS	STACK DIAMETER	CM	133.35	133.35
AS	STACK AREA	SQ CM	13967.0	13967.0
QS	STACK FLOW RT(DRY STD)	DNCMPM	1196.	1177.
QA	STACK FLOW RT(ACTUAL)	ACMPM	1454.	1472.
DN	PROBE TIP DIAMETER	CM	0.518	0.518
PCTI	PERCENT ISOKINETIC		90.7	89.4
MF	PARTICULATE (FRONT)	MG	0.09	0.16
MT	PARTICULATE (TOTAL)	MG	0.09	0.17
CAN	PARTICULATE (FRONT)	G/DNCM	0.0001	0.0001
CAO	PARTICULATE (TOTAL)	G/DNCM	0.0001	0.0001
CAT	PARTICULATE (FRONT)	G/ACM	0.0000	0.0001
CAU	PARTICULATE (TOTAL)	G/ACM	0.0000	0.0001
CAW	PARTICULATE (FRONT)	KG/HR	0.004	0.006
CAX	PARTICULATE (TOTAL)	KG/HR	0.004	0.007

Table B-17b. POM SAMPLING DATA SUMMARY (English units)

ABBR	DESCRIPTION (68 DEG F)	UNITS	1I	2I
TT	DURATION OF RUN	MINUTES	104.3	115.0
PB	BAROMETRIC PRESSURE	IN HG	29.92	29.99
DELH	AVG ORIFICE PRESS DROP	IN H2O	1.338	1.372
VM	VOL DRY GAS(METER CON)	DCF	60.410	63.270
TM	AVG GAS METER TEMP	DEG F	72.8	62.4
VMSTD	VOL DRY GAS (STD COND)	DSCF	60.07	64.33
VW	TOTAL H2O COLLECTED	ML	14.4	14.7
VWG	VOL H2O VAPOR(STD CON)	SCF	0.683	0.697
PCNTM	PERCNT MOISTURE BY VOL		1.12	1.07
MD	MOLE FRACTION DRY GAS		0.989	0.989
CO2	PERCENT CO2		3.4	3.4
O2	PERCENT O2		16.3	16.3
N2	PERCENT N2		80.3	80.3
MWD	MOL WT OF DRY GAS		29.2	29.2
MW	MOL WT OF STACK GAS		29.1	29.1
DELP	AVG STACK VELOCITY HEAD	IN H2O	0.842	0.836
CP	PITOT COEFFICIENT		0.850	0.850
TS	STACK TEMPERATURE	DEG F	168.	187.
PM	STACK PRESSURE(STATIC)	IN H2O	-6.00	-6.00
PS	STACK PRESSURE (ABS)	IN HG	29.48	29.55
VS	AVG STACK GAS VELOCITY	FPM	3416.	3458.
DS	STACK DIAMETER	INCHES	52.50	52.50
AS	STACK AREA	SQ IN	2164.8	2164.8
QS	STACK FLOW RT(DRY STD)	DSCFM	42221.	41574.
QA	STACK FLOW RT(ACTUAL)	ACFM	51340.	51972.
DN	PROBE TIP DIAMETER	INCHES	0.204	0.204
PCTI	PERCENT ISOKINETIC		90.7	89.4
MF	PARTICULATE (FRONT)	MG	0.09	0.16
MT	PARTICULATE (TOTAL)	MG	0.09	0.17
CAN	PARTICULATE (FRONT)	GR/DSCF	0.0000	0.0000
CAO	PARTICULATE (TOTAL)	GR/DSCF	0.0000	0.0000
CAT	PARTICULATE (FRONT)	GR/ACF	0.0000	0.0000
CAU	PARTICULATE (TOTAL)	GR/ACF	0.0000	0.0000
CAW	PARTICULATE (FRONT)	LB/HR	0.008	0.014
CAX	PARTICULATE (TOTAL)	LB/HR	0.008	0.014

Table B-18a. POM SAMPLING DATA SUMMARY (metric units)

ABBR	DESCRIPTION (20 DEG C)	UNITS	1M	2M	3M	10	20	30
TT	DURATION OF RUN	MINUTES	118.0	135.0	100.0	108.2	110.0	120.0
PB	BAROMETRIC PRESSURE	CM HG	76.07	75.69	75.54	76.00	76.17	76.07
DELH	AVG ORIFICE PRESS DROP	CM H2O	2.400	1.563	3.073	1.782	3.574	1.492
VM	VOL DRY GAS(METER CON)	DCM	1.615	1.660	1.749	1.290	1.900	1.716
TM	AVG GAS METER TEMP	DEG C	19.9	22.2	18.6	18.9	14.7	23.6
VMSTD	VOL DRY GAS (STD COND)	DNCM	1.82	1.66	1.75	1.30	1.95	1.70
VW	TOTAL H2O COLLECTED	ML	-5.6	-5.4	-5.7	89.0	131.1	116.4
VWG	VOL H2O VAPOR(STD COD)	NCM	-0.008	-0.007	-0.008	0.119	0.176	0.156
PCNTM	PERCNT MOISTURE BY VOL		-0.41	-0.44	-0.44	8.43	8.29	8.42
MD	MOLE FRACTION DRY GAS		1.004	1.004	1.004	0.916	0.917	0.916
CO2	PERCENT CO2		0.0	0.0	0.0	3.4	3.4	3.4
O2	PERCENT O2		29.7	29.7	29.7	16.3	16.3	16.3
N2	PERCENT N2		80.3	80.3	80.3	80.3	80.3	80.3
MWD	MOL WT OF DRY GAS		32.0	32.0	32.0	29.2	29.2	29.2
MW	MOL WT OF STACK GAS		32.0	32.0	32.0	28.3	28.3	28.3
DELP	AVG STACK VELOCITY HEAD	CM H2O	5.359	4.958	5.918	0.659	0.457	0.394
CP	PITOT COEFFICIENT		0.850	0.850	0.850	0.850	0.850	0.850
TS	STACK TEMPERATURE	DEG C	80.	67.	64.	41.	42.	47.
PM	STACK PRESSURE(STATIC)	CM H2O	-15.24	-15.24	-15.24	-0.25	-0.25	-0.25
PS	STACK PRESSURE (ABS)	CM HG	74.95	74.57	74.42	75.98	76.16	76.05
VS	AVG STACK GAS VELOCITY	MPM	1563.	1489.	1624.	497.	461.	431.
DS	STACK DIAMETER	CM	20.32	20.32	20.32	175.26	175.26	175.26
AS	STACK AREA	SQ CM	324.3	324.3	324.3	24125.8	24125.8	24125.8
QS	STACK FLOW RT(DRY STD)	DNCMPM	42.	41.	45.	1027.	955.	877.
QA	STACK FLOW RT(ACTUAL)	ACMPM	51.	48.	53.	1198.	1113.	1040.
DN	PROBE TIP DIAMETER	CM	0.518	0.518	0.518	0.622	0.622	0.945
PCTI	PERCENT ISOKINETIC		56.2	46.2	59.9	92.9	147.4	55.8
MF	PARTICULATE (FRONT)	MG	1.40	1.08	1.58	0.05	0.04	0.04
MT	PARTICULATE (TOTAL)	MG	1.48	1.21	1.61	0.05	0.05	0.05
CAN	PARTICULATE (FRONT)	G/DNCM	0.0008	0.0006	0.0009	0.0000	0.0000	0.0000
CAO	PARTICULATE (TOTAL)	G/DNCM	0.0008	0.0007	0.0009	0.0000	0.0000	0.0000
CAT	PARTICULATE (FRONT)	G/ACM	0.0006	0.0005	0.0008	0.0000	0.0000	0.0000
CAU	PARTICULATE (TOTAL)	G/ACM	0.0007	0.0006	0.0008	0.0000	0.0000	0.0000
CAW	PARTICULATE (FRONT)	KG/HR	0.002	0.002	0.002	0.002	0.001	0.001
CAX	PARTICULATE (TOTAL)	KG/HR	0.002	0.002	0.002	0.003	0.001	0.002

Table 18-b. POM SAMPLING DATA SUMMARY (English units)

ABBR	DESCRIPTION (68 DEG F)	UNITS	1M	2M	3M	10	20	30
TT	DURATION OF RUN	MINUTES	118.0	135.0	100.0	108.2	110.0	120.0
PB	BAROMETRIC PRESSURE	IN HG	29.95	29.80	29.74	29.92	29.99	29.95
DELH	AVG ORIFICE PRESS DROP	IN H2O	0.945	0.615	1.210	0.701	1.407	0.587
VM	VOL DRY GAS(METER CON)	DCF	64.090	59.310	61.770	45.560	67.090	60.610
TM	AVG GAS METER TEMP	DEG F	67.8	71.9	65.4	66.0	58.4	74.5
VMSTD	VOL DRY GAS (STD COND)	DSCF	64.33	58.74	61.89	45.82	68.74	60.03
VW	TOTAL H2O COLLECTED	ML	-5.6	-5.4	-5.7	89.0	131.1	116.4
VWG	VOL H2O VAPOR(STD CON)	SCF	-0.265	-0.256	-0.270	4.219	6.214	5.517
PCNTM	PERCNT MOISTURE BY VOL		-0.41	-0.44	-0.44	8.43	8.29	8.42
MD	MOLE FRACTION DRY GAS		1.004	1.004	1.004	0.916	0.917	0.916
CO2	PERCENT CO2		0.0	0.0	0.0	3.4	3.4	3.4
O2	PERCENT O2		29.7	29.7	29.7	16.3	16.3	16.3
N2	PERCENT N2		80.3	80.3	80.3	80.3	80.3	80.3
MWD	MOL WT OF DRY GAS		32.0	32.0	32.0	29.2	29.2	29.2
MW	MOL WT OF STACK GAS		32.0	32.0	32.0	28.3	28.3	28.3
DELP	AVG STACK VELOCITY HEAD	IN H2O	2.110	1.952	2.330	0.260	0.180	0.155
CP	PITOT COEFFICIENT		0.850	0.850	0.850	0.850	0.850	0.850
TS	STACK TEMPERATURE	DEG F	176.	153.	147.	106.	107.	116.
PM	STACK PRESSURE(STATIC)	IN H2O	-6.00	-6.00	-6.00	-0.10	-0.10	-0.10
PS	STACK PRESSURE (ABS)	IN HG	29.51	29.36	29.30	29.91	29.98	29.94
VS	AVG STACK GAS VELOCITY	FPM	5192.	4886.	5328.	1630.	1513.	1415.
DS	STACK DIAMETER	INCHES	8.00	8.00	8.00	69.00	69.00	69.00
AS	STACK AREA	SQ IN	50.3	50.3	50.3	3739.3	3739.3	3739.3
QS	STACK FLOW RT(DRY STD)	DSCFM	1496.	1453.	1596.	36269.	33736.	30963.
QA	STACK FLOW RT(ACTUAL)	ACFM	1812.	1705.	1860.	42311.	39287.	36729.
DN	PROBE TIP DIAMETER	INCHES	0.204	0.204	0.204	0.245	0.245	0.372
PCTI	PERCENT ISOKINETIC		56.2	46.2	59.9	92.9	147.4	55.8
MF	PARTICULATE (FRONT)	MG	1.40	1.08	1.58	0.05	0.04	0.04
MT	PARTICULATE (TOTAL)	MG	1.48	1.21	1.61	0.05	0.05	0.05
CAN	PARTICULATE (FRONT)	GR/DSCF	0.0003	0.0003	0.0004	0.0000	0.0000	0.0000
CAO	PARTICULATE (TOTAL)	GR/DSCF	0.0004	0.0003	0.0004	0.0000	0.0000	0.0000
CAT	PARTICULATE (FRONT)	GR/ACF	0.0003	0.0002	0.0003	0.0000	0.0000	0.0000
CAU	PARTICULATE (TOTAL)	GR/ACF	0.0003	0.0003	0.0003	0.0000	0.0000	0.0000
CAW	PARTICULATE (FRONT)	LB/HR	0.004	0.004	0.005	0.005	0.003	0.003
CAX	PARTICULATE (TOTAL)	LB/HR	0.005	0.004	0.005	0.006	0.003	0.004

Table B-19. MIXER DUCT POM EMISSION RATE

Run No.	Emission rate, kg/hr (lb/hr)	Production rate, metric tons/hr (tons/hr)	Emission factor, kg/metric ton (lb/ton)
1	0.0023 (0.005)	139.2 (153.4)	1.7×10^{-5} (3.3×10^{-5})
2	0.0018 (0.004)	131.6 (145.1)	1.4×10^{-5} (2.8×10^{-5})
3	0.0023 (0.005)	205.0 (226.0)	1.1×10^{-5} (2.2×10^{-5})

[a]Mean emission factor = $1.37 \times 10^{-5} \pm 35.2\%$ kg/metric ton
($2.74 \times 10^{-5} \pm 35.2\%$ lb/ton)

Table B-20. OUTLET POM EMISSION RATE

Run No.	Emission rate, kg/hr (lb/hr)	Production rate, metric tons/hr (tons/hr)	Emission factor, kg/metric ton (lb/ton)
1[a]	0.0027 (0.006)	57.0 (62.8)	4.8×10^{-5} (9.6×10^{-5})
2	0.0014 (0.003)	119.3 (131.5)	1.2×10^{-5} (2.3×10^{-5})
3	0.0018 (0.004)	133.1 (146.7)	1.4×10^{-5} (2.8×10^{-5})

[a]Mean emission factor = $1.25 \times 10^{-5} \pm 38.2\%$ kg/metric ton
($2.5 \times 10^{-5} \pm 38.2\%$ lb/ton)

[b]Not included during averaging because of difficulties during sampling.

Table B-21. INLET POM EMISSION RATE

Run No.	Emission rate, kg/hr (lb/hr)	Production rate, metric tons/hr (tons/hr)	Emission factor, kg/metric ton (lb/ton)
1	0.0036 (0.008)	58.3 (64.2)	0.63×10^{-4} (1.25×10^{-4})
2	0.0063 (0.014)	118.3 (130.4)	0.54×10^{-4} (1.07×10^{-4})

[a]Mean emission factor = $0.58 \times 10^{-4} \pm 33.4\%$ kg/metric ton
($1.16 \times 10^{-4} \pm 33.4\%$ lb/ton)

Table B-22. ALDEHYDE CONCENTRATION IN IMPINGER LIQUOR

Outlet run	mg/ml				Total volume of sample, ml
	Isobutanal	Formaldehyde	Butanal	Isopentanal	
1	0.003	0.0002	0.003	0.02	51.5
2	<0.0002	0.00011	0.002	<<0.0001	92.7
3	0.03	0.0002	0.007	0.02	66.5

Table B-23. ALDEHYDES DETECTED IN SAMPLES COLLECTED AT OUTLET

Run no.	Aldehyde	Concentration		Emission rate	
		μg/ml	μg/m³	g/hr	Mean mg/s
1	Formaldehyde	0.2	215	12.3	
2	Formaldehyde	0.11	187	10.7	3.4 ± 26%
3	Formaldehyde	0.2	247	14.2	
1	Isobutanal	3	3,213	184	
2	Isobutanal	<0.2	<339	19.4	28 ± 350%
3	Isobutanal	30	37,076	2,130[a]	
1	Butanal	3	3,213	184.2	
2	Butanal	2	<3,390	194.3	53 ± 12%
3	Butanal	7	8,828	506[a]	
1	Isopentanal	20	21,540	1,230	
2	Isopentanal	<<0.1	<<177	10.1[a]	370 ± 30%
3	Isopentanal	20	24,718	1,420	

[a]Not averaged.

Table B-24. TOTAL HYDROCARBON AND CARBON MONOXIDE ANALYSIS

Outlet run	Relative concentration, ppm by weight	
	Total hydrocarbon[a]	Carbon monoxide
1	16	3.6
2	130	33
2 (duplicate)	124	34

[a]Value reported as methane equivalent.

APPENDIX C

DATA USED TO DETERMINE PARTICULATE SOURCE SEVERITY DISTRIBUTION

Table C-1. RAW DATA (ASPHALT SURVEY CALCULATIONS - PRIMARY COLLECTORS ONLY)

ASPHALT SURVEY CALCULATIONS--PRIMARY COLLECTORS ONLY

PRODUCTION RATE (TONS/YR)	HOURS OF OPERATION (HRS/YR)	EMISSION FACTORS PRIMARY (LB/TON)	EMISSION FACTORS SECONDARY (LB/TON)	EMISSION RATE (LB/HR)	EMISSION RATE (G/SEC)	STACK HEIGHT (METERS)	SEVERITY
85000.	447.37	0.3	0.01	57.00	7.18	9.1	6.0127
60000.	500.00	0.3	0.30	36.00	4.54	13.7	1.6878
175000.	875.00	1.7	0.30	340.00	42.84	15.2	12.9115
30000.	166.67	1.7	0.04	306.00	38.56	15.2	11.6203
45000.	300.00	1.7	45.00	255.00	32.13	9.1	26.8989
100000.	666.67	45.0	0.01	6749.99	850.50	3.0	6408.2676
50000.	333.33	1.7	0.01	255.00	32.13	10.7	19.7625
65000.	650.00	0.3	0.04	30.00	3.78	13.7	1.4065
180000.	1200.00	0.3	0.04	45.00	5.67	10.7	3.4875
75000.	500.00	0.3	0.04	45.00	5.67	9.1	4.7469
100000.	1000.00	1.7	0.40	170.00	21.42	13.7	7.9700
60000.	600.00	1.7	0.01	170.00	21.42	6.1	40.3484
180000.	900.00	1.7	0.01	340.00	42.84	10.7	26.3499
300000.	1500.00	0.3	1.70	60.00	7.56	9.1	6.3292
70000.	466.67	0.3	0.30	45.00	5.67	9.1	4.7469
125000.	961.54	0.3	0.01	39.00	4.91	4.3	18.8906
100000.	500.00	0.3	0.04	60.00	7.56	15.2	2.2785
40000.	266.67	1.7	1.70	255.00	32.13	9.1	26.8989
50000.	200.00	0.3	1.70	75.00	9.45	12.2	4.4502
75000.	300.00	1.7	1.70	425.00	53.55	12.2	25.2177
50000.	250.00	0.3	1.70	60.00	7.56	10.7	4.6500
50000.	333.33	0.3	1.70	45.00	5.67	10.7	3.4875
75000.	600.00	15.0	0.30	1875.00	236.25	12.2	111.2546
47000.	505.38	0.3	1.70	27.90	3.52	18.3	0.7358
73000.	500.00	0.3	0.01	43.80	5.52	18.3	1.1551
37000.	402.17	0.3	1.70	27.60	3.48	18.3	0.7279
250000.	1041.67	1.7	0.01	408.00	51.41	10.4	33.5073
140000.	700.00	1.7	0.04	340.00	42.84	15.2	12.9115
65000.	433.33	1.7	0.04	255.00	32.13	12.2	15.1306
120000.	1200.00	1.7	1.70	170.00	21.42	12.2	10.0871
120000.	800.00	1.7	1.70	255.00	32.13	12.2	15.1306
90000.	450.00	45.0	0.01	8999.99	1134.00	10.7	697.4985
120000.	600.00	1.7	0.01	340.00	42.84	12.2	20.1742
80000.	533.33	1.7	1.70	255.00	32.13	6.1	60.5225
70000.	583.33	1.7	0.01	204.00	25.70	7.6	30.9875
90000.	600.00	15.0	0.01	2250.00	283.50	12.2	133.5056
220000.	1000.00	1.7	0.01	374.00	47.12	10.7	28.9849
80000.	470.59	45.0	0.01	7649.99	963.90	9.1	806.9670
130000.	1300.00	1.7	1.70	170.00	21.42	12.2	10.0871
130000.	520.00	0.3	1.70	75.00	9.45	12.2	4.4502
100000.	357.14	0.3	1.70	84.00	10.58	10.4	6.8986
50000.	227.27	0.3	1.70	66.00	8.32	13.4	3.2365
280000.	3111.11	1.7	1.70	153.00	19.28	10.7	11.8575
40000.	320.00	1.7	0.04	212.50	26.77	18.3	5.6039
150000.	1200.00	1.7	1.70	212.50	26.77	10.7	16.4687
50000.	416.67	0.3	1.70	36.00	4.54	9.1	3.7975
270000.	1800.00	45.0	0.01	6749.99	850.50	18.3	178.0074
100000.	833.33	1.7	0.04	204.00	25.70	7.6	30.9875
100000.	1111.11	1.7	0.04	153.00	19.28	7.6	23.2407
100000.	333.33	1.7	0.01	510.00	64.26	9.1	53.7978

Table C-1 (continued). RAW DATA
(ASPHALT SURVEY CALCULATIONS - PRIMARY COLLECTORS ONLY)

PRODUCTION RATE (TONS/YR)	HOURS OF OPERATION (HRS/YR)	EMISSION FACTORS PRIMARY (LB/TON)	EMISSION FACTORS SECONDARY (LB/TON)	EMISSION RATE (LB/HR)	EMISSION RATE (G/SEC)	STACK HEIGHT (METERS)	SEVERITY
200000.	1333.33	1.7	0.01	255.00	32.13	7.6	38.7344
75000.	500.00	1.7	0.01	255.00	32.13	7.3	42.0295
75000.	600.00	1.7	0.04	212.50	26.77	12.2	12.6089
50000.	333.33	1.7	0.04	255.00	32.13	7.6	38.7344
90000.	500.00	45.0	0.01	8099.99	1020.60	9.8	750.9689
150000.	600.00	1.7	0.01	425.00	53.55	6.1	100.8709
50000.	500.00	0.3	0.30	30.00	3.78	9.1	3.1646
40000.	400.00	1.7	0.40	170.00	21.42	15.2	6.4557
60000.	600.00	0.3	0.40	30.00	3.78	12.2	1.7801
50000.	500.00	0.3	0.30	30.00	3.78	15.2	1.1392
300000.	1000.00	45.0	0.01	13499.98	1701.00	9.1	1424.0596
100000.	500.00	1.7	1.70	340.00	42.84	8.5	41.1718
36000.	400.00	0.3	0.04	27.00	3.40	8.5	3.2695
60000.	800.00	0.3	1.70	22.50	2.83	7.3	3.7085
50000.	333.33	0.3	0.04	45.00	5.67	9.8	4.1720
123000.	492.00	1.7	0.04	425.00	53.55	12.8	22.8732
56000.	466.67	0.3	1.70	36.00	4.54	12.5	2.0332
50000.	416.67	1.7	1.70	204.00	25.70	10.4	16.7536
71000.	591.67	1.7	1.70	204.00	25.70	7.3	33.6236
80000.	615.38	0.3	0.30	39.00	4.91	9.1	4.1139
50000.	384.62	0.3	0.30	39.00	4.91	9.1	4.1139
70000.	700.00	0.3	0.30	30.00	3.78	7.6	4.5570
70000.	700.00	1.7	1.70	170.00	21.42	12.2	10.0871
100000.	571.43	1.7	0.01	297.50	37.48	9.1	31.3821
20000.	400.00	1.7	1.70	85.00	10.71	9.1	8.9663
21769.	362.82	1.7	1.70	102.00	12.85	9.1	10.7596
138194.	1105.55	0.3	1.70	37.50	4.72	12.2	2.2251
58000.	483.33	1.7	1.70	204.00	25.70	14.6	8.4059
79000.	526.67	15.0	0.30	2250.00	283.50	12.2	133.5056
65000.	433.33	45.0	0.01	6749.99	850.50	8.1	912.5337
15000.	250.00	1.7	0.04	102.00	12.85	12.2	6.0523
110000.	611.11	0.3	0.01	54.00	6.80	16.8	1.6947
130000.	812.50	0.3	0.01	48.00	6.05	12.5	2.7109
260000.	1040.00	0.3	0.01	75.00	9.45	23.8	1.1703
55000.	458.33	1.7	0.01	204.00	25.70	12.8	10.9791
45000.	1285.71	1.7	1.70	59.50	7.50	10.1	5.1871
100000.	454.55	1.7	0.04	374.00	47.12	9.1	39.4517
250000.	555.56	15.0	0.01	6749.99	850.50	7.6	1025.3228
60000.	480.00	15.0	0.01	1875.00	236.25	6.1	445.0186
75000.	394.74	1.7	0.01	323.00	40.70	6.1	76.6619
190000.	844.44	1.7	0.01	382.50	48.19	13.7	17.9326
100000.	714.29	0.3	1.70	42.00	5.29	12.2	2.4921
90000.	600.00	0.3	0.04	45.00	5.67	14.6	1.8542
85000.	653.85	1.7	0.01	221.00	27.85	6.1	52.4529
10000.	111.11	0.3	1.70	27.00	3.40	18.3	0.7120
80000.	615.38	1.7	0.01	221.00	27.85	4.3	107.0466
80000.	571.43	0.3	1.70	42.00	5.29	13.7	1.9691
50000.	454.55	0.3	0.04	33.00	4.16	18.3	0.8703
125000.	625.00	0.3	0.30	60.00	7.56	9.1	6.3292
60000.	333.33	1.7	1.70	306.00	38.56	9.1	32.2787

Table C-1 (continued). RAW DATA
(ASPHALT SURVEY CALCULATIONS - PRIMARY COLLECTORS ONLY)

PRODUCTION RATE (TONS/YR)	HOURS OF OPERATION (HRS/YR)	EMISSION FACTORS PRIMARY (LB/TON)	EMISSION FACTORS SECONDARY (LB/TON)	EMISSION RATE (LB/HR)	EMISSION RATE (G/SEC)	STACK HEIGHT (METERS)	SEVERITY
120000.	666.67	0.3	0.04	54.00	6.80	9.1	5.6962
100000.	333.33	0.3	0.01	90.00	11.34	3.0	85.4436
80000.	400.00	45.0	0.01	8999.99	1134.00	9.1	949.3730
90000.	375.00	0.3	0.01	72.00	9.07	3.0	68.3549
15000.	125.00	1.7	1.70	204.00	25.70	6.1	48.4180
20000.	333.33	0.3	0.04	18.00	2.27	9.1	1.8987
80000.	1428.57	1.7	1.70	95.20	12.00	18.0	2.5964
20000.	1428.57	1.7	1.70	23.80	3.00	12.2	1.4122
75000.	1442.31	1.7	0.01	88.40	11.14	11.3	6.1304
75000.	1442.31	1.7	0.01	88.40	11.14	11.3	6.1304
145000.	1450.00	15.0	0.01	1500.00	189.00	9.1	158.2288
100000.	1449.28	0.3	0.04	20.70	2.61	24.4	0.3071
50000.	1428.57	1.7	1.70	59.50	7.50	16.2	2.0110
100000.	555.56	1.7	0.01	306.00	38.56	11.0	22.4158
30000.	300.00	15.0	0.04	1500.00	189.00	11.6	98.6191
100000.	666.67	1.7	0.01	255.00	32.13	8.5	30.8788
150000.	789.47	1.7	0.01	323.00	40.70	3.0	306.6475
200000.	1333.33	45.0	0.01	6749.99	850.50	13.7	316.4576
150000.	500.00	0.3	0.04	90.00	11.34	18.3	2.3734
80000.	533.33	1.7	1.70	255.00	32.13	4.6	107.5956
150000.	750.00	1.7	0.01	340.00	42.84	18.3	8.9663
80000.	666.67	0.3	0.04	36.00	4.54	9.1	3.7975
150000.	500.00	1.7	0.01	510.00	64.26	7.6	77.4688
75000.	312.50	1.7	0.01	408.00	51.41	9.1	43.0382
150000.	789.47	1.7	0.01	323.00	40.70	12.2	19.1655
100000.	625.00	45.0	0.01	7199.99	907.20	15.2	273.4194
125000.	781.25	1.7	0.01	272.00	34.27	7.6	41.3167
50000.	277.78	1.7	0.01	306.00	38.56	7.6	46.4813
200000.	1600.00	1.7	0.01	212.50	26.77	3.7	140.0984
150000.	500.00	0.3	0.04	90.00	11.34	18.3	2.3734
350000.	1000.00	0.3	0.01	105.00	13.23	7.6	15.9495
85000.	607.14	0.3	0.04	42.00	5.29	6.1	9.9684
120000.	1000.00	1.7	0.04	204.00	25.70	19.8	4.5840
50000.	454.55	0.3	0.04	33.00	4.16	15.2	1.2532
150000.	600.00	1.7	0.30	425.00	53.55	12.2	25.2177
80000.	800.00	0.3	0.04	30.00	3.78	9.1	3.1646
225000.	1022.73	0.3	0.04	66.00	8.32	9.1	6.9621
70000.	700.00	1.7	0.30	170.00	21.42	7.6	25.8229
185000.	840.91	45.0	0.01	9899.99	1247.40	9.1	1044.3103
125000.	1000.00	0.3	0.04	37.50	4.72	11.9	2.3407
75000.	357.14	0.3	0.04	63.00	7.94	9.1	6.6456
35000.	291.67	0.3	0.04	36.00	4.54	10.7	2.7900
100000.	400.00	0.3	45.00	75.00	9.45	10.1	6.5384
85000.	850.00	1.7	45.00	170.00	21.42	12.2	10.0871
100000.	555.56	0.3	0.01	54.00	6.80	16.8	1.6947
130000.	1181.82	1.7	0.01	187.00	23.56	33.5	1.4672
175000.	1060.61	1.7	0.30	280.50	35.34	9.1	29.5888
200000.	666.67	45.0	0.01	13499.98	1701.00	9.1	1424.0596
20000.	666.67	1.7	0.30	51.00	6.43	7.3	8.4059
20000.	250.00	45.0	1.70	3600.00	453.60	9.1	379.7492

Table C-1 (continued). RAW DATA
(ASPHALT SURVEY CALCULATIONS - PRIMARY COLLECTORS ONLY)

PRODUCTION RATE (TONS/YR)	HOURS OF OPERATION (HRS/YR)	EMISSION FACTORS PRIMARY (LB/TON)	EMISSION FACTORS SECONDARY (LB/TON)	EMISSION RATE (LB/HR)	EMISSION RATE (G/SEC)	STACK HEIGHT (METERS)	SEVERITY
250000.	714.29	1.7	0.04	595.00	74.97	12.2	35.3048
200000.	1666.67	45.0	0.30	5399.99	680.40	7.6	820.2582
150000.	750.00	45.0	0.01	8999.99	1134.00	12.2	534.0223
50000.	500.00	1.7	0.30	170.00	21.42	12.2	10.0871
250000.	1250.00	0.3	0.01	60.00	7.56	6.1	14.2406
50000.	500.00	1.7	0.30	170.00	21.42	12.2	10.0871
70000.	388.89	0.3	0.04	54.00	6.80	9.1	5.6962
75000.	535.71	1.7	0.04	238.00	29.99	4.9	88.2620
90000.	720.00	0.3	1.70	37.50	4.72	9.1	3.9557
160000.	842.11	1.7	1.70	323.00	40.70	15.2	12.2659
100000.	500.00	1.7	0.04	340.00	42.84	4.6	143.4608
40000.	400.00	1.7	0.04	170.00	21.42	4.6	71.7304
175000.	700.00	15.0	0.01	3750.00	472.50	4.6	1582.2883
100000.	666.67	1.7	0.04	255.00	32.13	10.7	19.7625
75000.	625.00	1.7	0.04	204.00	25.70	7.6	30.9875
265000.	883.33	15.0	0.01	4499.99	567.00	2.4	6675.2793
50000.	625.00	1.7	1.70	136.00	17.14	9.1	14.3461
85000.	696.72	0.3	0.01	36.60	4.61	9.1	3.8608
300000.	1000.00	15.0	0.01	4499.99	567.00	7.9	631.9790
100000.	666.67	45.0	0.01	6749.99	850.50	6.1	1602.0669
150000.	750.00	1.7	0.01	340.00	42.84	6.1	80.6967
75000.	375.00	0.3	0.04	60.00	7.56	12.8	3.2292
65000.	866.67	0.3	0.04	22.50	2.83	9.1	2.3734
65000.	866.67	0.3	0.04	22.50	2.83	9.1	2.3734
65000.	433.33	45.0	0.01	6749.99	850.50	9.8	625.8074
100000.	500.00	1.7	0.01	340.00	42.84	9.1	35.8652
50000.	625.00	0.3	0.04	24.00	3.02	9.1	2.5317
80000.	888.89	1.7	0.04	153.00	19.28	9.1	16.1393
150000.	1500.00	1.7	1.70	170.00	21.42	6.1	40.3484
150000.	1200.00	1.7	0.01	212.50	26.77	6.1	50.4354
100000.	500.00	1.7	1.70	340.00	42.84	11.6	22.3537
200000.	1052.63	1.7	0.01	323.00	40.70	4.6	136.2878
200000.	833.33	0.3	0.30	72.00	9.07	12.2	4.2722
130000.	650.00	1.7	0.01	340.00	42.84	18.3	8.9663
100000.	555.56	1.7	1.70	306.00	38.56	9.1	32.2787
180000.	720.00	1.7	0.01	425.00	53.55	17.7	11.9942
50000.	333.33	0.3	0.04	45.00	5.67	19.8	1.0112
100000.	800.00	0.3	0.30	37.50	4.72	9.1	3.9557
70000.	400.00	1.7	1.70	297.50	37.48	15.2	11.2975
90000.	642.86	1.7	0.30	238.00	29.99	10.7	18.4450
170000.	680.00	1.7	0.01	425.00	53.55	12.2	25.2177
80000.	290.91	0.3	1.70	82.50	10.39	15.2	3.1329
160000.	533.33	45.0	0.01	13499.99	1701.00	9.1	1424.0597
48000.	600.00	0.3	0.01	24.00	3.02	13.7	1.1252
90000.	900.00	1.7	0.04	170.00	21.42	13.7	7.9700
100000.	1333.33	1.7	0.01	127.50	16.06	6.1	30.2613
40000.	571.43	0.3	0.30	21.00	2.65	10.7	1.6275
150000.	833.33	1.7	0.04	306.00	38.56	12.2	18.1568
30000.	250.00	1.7	1.70	204.00	25.70	9.8	18.9133
130000.	650.00	0.3	0.04	60.00	7.56	9.1	6.3292

Table C-1 (continued). RAW DATA
(ASPHALT SURVEY CALCULATIONS - PRIMARY COLLECTORS ONLY)

PRODUCTION RATE (TONS/YR)	HOURS OF OPERATION (HRS/YR)	EMISSION FACTORS PRIMARY (LB/TON)	EMISSION FACTORS SECONDARY (LB/TON)	EMISSION RATE (LB/HR)	EMISSION RATE (G/SEC)	STACK HEIGHT (METERS)	SEVERITY
125000.	694.44	0.3	0.04	54.00	6.80	19.1	1.3124
125000.	735.29	1.7	0.01	289.00	36.41	5.5	84.6817
50000.	1000.00	1.7	0.30	85.00	10.71	10.7	6.5875
35000.	466.67	1.7	0.01	127.50	16.06	6.1	30.2613
152000.	675.56	1.7	1.70	382.50	48.19	10.7	29.6437
211000.	496.47	1.7	0.01	722.50	91.03	10.7	55.9936
144029.	758.05	1.7	0.01	323.00	40.70	10.7	25.0324
180000.	720.00	1.7	0.01	425.00	53.55	10.7	32.9374
150000.	666.67	1.7	0.01	382.50	48.19	10.7	29.6437
92000.	408.89	1.7	0.01	382.50	48.19	10.7	29.6437
176000.	782.22	1.7	0.01	382.50	48.19	10.7	29.6437
210000.	840.00	45.0	0.01	11249.99	1417.50	10.7	871.8731
200000.	909.09	0.3	0.01	66.00	8.32	3.7	43.5129
150000.	750.00	45.0	0.01	8999.99	1134.00	3.0	8544.3564
100000.	666.67	1.7	0.30	255.00	32.13	8.5	30.8788
100000.	666.67	1.7	0.30	255.00	32.13	8.5	30.8788
45000.	450.00	1.7	0.01	170.00	21.42	9.1	17.9326
200000.	1250.00	1.7	0.01	272.00	34.27	9.1	28.6922
50000.	500.00	0.3	0.01	30.00	3.78	4.6	12.6583
50000.	555.56	1.7	0.01	153.00	19.28	6.1	36.3135
275000.	763.89	1.7	0.01	612.00	77.11	9.1	64.5574
100000.	666.67	1.7	0.30	255.00	32.13	6.1	60.5225
100000.	666.67	1.7	0.30	255.00	32.13	6.1	60.5225
90000.	692.31	1.7	0.04	221.00	27.85	9.1	23.3124
50000.	500.00	1.7	1.70	170.00	21.42	6.1	40.3484
135000.	1350.00	15.0	0.01	1500.00	189.00	4.6	632.9153
50000.	333.33	0.3	1.70	45.00	5.67	13.7	2.1097
255000.	1378.38	0.3	0.01	55.50	6.99	4.9	20.5821
100000.	555.56	1.7	0.01	306.00	38.56	6.1	72.6270
80000.	800.00	0.3	0.04	30.00	3.78	10.7	2.3250
100000.	666.67	1.7	0.04	255.00	32.13	10.7	19.7625
80000.	533.33	0.3	0.04	45.00	5.67	6.1	10.6804
40000.	571.43	0.3	0.04	21.00	2.65	12.2	1.2461
40000.	444.44	45.0	0.01	4050.00	510.30	12.2	240.3100
25000.	208.33	0.3	0.04	36.00	4.54	9.1	3.7975
10000.	166.67	0.3	0.04	18.00	2.27	9.1	1.8987
60000.	500.00	0.3	0.04	36.00	4.54	3.0	34.1774
30000.	250.00	0.3	0.01	36.00	4.54	3.0	34.1774
20000.	266.67	0.3	1.70	22.50	2.83	9.1	2.3734
30000.	166.67	0.3	0.04	54.00	6.80	9.1	5.6962
20000.	333.33	0.3	1.70	18.00	2.27	9.1	1.8987
20000.	200.00	0.3	0.01	30.00	3.78	3.0	28.4812
30000.	333.33	0.3	0.04	27.00	3.40	9.1	2.8481
30000.	500.00	1.7	1.70	102.00	12.85	9.1	10.7596
50000.	1000.00	0.3	0.30	15.00	1.89	7.6	2.2785
225000.	900.00	1.7	0.01	425.00	53.55	15.2	16.1393
60000.	400.00	1.7	0.01	255.00	32.13	15.2	9.6836
50000.	250.00	1.7	1.70	340.00	42.84	15.2	12.9115
330000.	1320.00	1.7	1.70	425.00	53.55	15.2	16.1393
95000.	633.33	1.7	1.70	255.00	32.13	15.2	9.6836

Table C-1 (continued). RAW DATA
(ASPHALT SURVEY CALCULATIONS - PRIMARY COLLECTORS ONLY)

PRODUCTION RATE (TONS/YR)	HOURS OF OPERATION (HRS/YR)	EMISSION FACTORS PRIMARY (LB/TON)	EMISSION FACTORS SECONDARY (LB/TON)	EMISSION RATE (LB/HR)	EMISSION RATE (G/SEC)	STACK HEIGHT (METERS)	SEVERITY
150000.	352.94	0.3	0.01	127.50	16.06	15.2	4.8418
320000.	1280.00	1.7	0.01	425.00	53.55	15.2	16.1393
140000.	700.00	1.7	0.01	340.00	42.84	15.2	12.9115
150000.	750.00	1.7	0.01	340.00	42.84	15.2	12.9115
200000.	533.33	0.3	0.01	112.50	14.17	15.2	4.2722
60000.	240.00	1.7	1.70	425.00	53.55	15.2	16.1393
500000.	952.38	0.3	0.01	157.50	19.84	15.2	5.9810
120000.	320.00	1.7	0.01	637.50	80.32	15.2	24.2090
300000.	800.00	1.7	1.70	637.50	80.32	15.2	24.2090
80000.	666.67	1.7	0.01	204.00	25.70	15.2	7.7469
130000.	481.48	1.7	1.70	459.00	57.83	12.2	27.2351
100000.	625.00	0.3	0.04	48.00	6.05	15.8	1.6853
50000.	500.00	0.3	0.01	30.00	3.78	9.1	3.1646
200000.	1000.00	1.7	1.70	340.00	42.84	9.1	35.8652
40000.	266.67	1.7	0.01	255.00	32.13	4.6	107.5956
120000.	600.00	1.7	0.04	340.00	42.84	15.2	12.9115
200000.	625.00	0.3	0.04	96.00	12.10	1.2	569.6238
50000.	416.67	0.3	0.04	36.00	4.54	18.3	0.9494
125000.	694.44	0.3	0.04	54.00	6.80	14.3	2.3208
100000.	666.67	0.3	1.70	45.00	5.67	12.2	2.6701
80000.	533.33	0.3	0.04	72.00	9.07	16.8	2.2597
100000.	555.56	0.3	0.04	54.00	6.80	7.6	8.2026
60000.	480.00	1.7	1.70	212.50	26.77	9.1	22.4158
450000.	1590.11	0.3	0.04	84.90	10.70	10.4	6.9725
60000.	1000.00	1.7	1.70	102.00	12.85	8.8	11.5144
100000.	666.67	1.7	1.70	255.00	32.13	6.1	60.5225
75000.	1071.43	1.7	1.70	119.00	14.99	9.1	12.5528
150000.	1000.00	0.3	0.04	45.00	5.67	7.6	6.8355
75000.	300.00	1.7	0.30	425.00	53.55	16.5	13.8369
40000.	200.00	1.7	0.30	340.00	42.84	18.3	8.9663
150000.	681.82	1.7	0.30	374.00	47.12	19.8	8.4039
70000.	411.76	0.3	1.70	51.00	6.43	10.7	3.9525
50000.	588.24	1.7	0.01	144.50	18.21	9.1	15.2427
140000.	933.33	1.7	0.01	255.00	32.13	12.2	15.1306
140000.	777.78	0.3	0.04	54.00	6.80	12.2	3.2041
80000.	592.59	0.3	0.30	40.50	5.10	18.3	1.0680
75000.	625.00	0.3	0.30	36.00	4.54	12.2	2.1361
100000.	1111.11	1.7	1.70	153.00	19.28	7.3	25.2177
150000.	1000.00	0.3	1.70	45.00	5.67	10.7	3.4875
100000.	1000.00	1.7	0.04	170.00	21.42	15.2	6.4557
50000.	333.33	1.7	0.01	255.00	32.13	9.1	26.8989
100000.	666.67	1.7	0.30	255.00	32.13	7.6	38.7344
150000.	666.67	45.0	0.01	10124.99	1275.75	15.2	384.4961
130000.	619.05	0.3	1.70	63.00	7.94	9.1	6.6456
100000.	666.67	1.7	0.01	255.00	32.13	9.1	26.8989
55000.	220.00	45.0	0.01	11249.99	1417.50	11.7	720.5563
200000.	666.67	1.7	0.01	510.00	64.26	12.2	30.2613
70000.	700.00	1.7	45.00	170.00	21.42	10.3	14.1271
200000.	666.67	0.3	0.01	90.00	11.34	12.2	5.3402
150000.	810.81	1.7	0.01	314.50	39.63	10.7	24.3737

Table C-1 (continued). RAW DATA
(ASPHALT SURVEY CALCULATIONS - PRIMARY COLLECTORS ONLY)

PRODUCTION RATE (TONS/YR)	HOURS OF OPERATION (HRS/YR)	EMISSION FACTORS PRIMARY (LB/TON)	EMISSION FACTORS SECONDARY (LB/TON)	EMISSION RATE (LB/HR)	EMISSION RATE (G/SEC)	STACK HEIGHT (METERS)	SEVERITY
40000.	400.00	1.7	0.01	170.00	21.42	12.2	10.0871
60000.	600.00	1.7	0.01	170.00	21.42	9.1	17.9326
150000.	857.14	1.7	0.01	297.50	37.48	9.1	31.3820
350000.	1750.00	15.0	0.01	3000.00	378.00	7.6	455.6990
100000.	444.44	0.3	0.01	67.50	8.50	10.4	5.5435
100000.	666.67	0.3	0.04	45.00	5.67	9.8	4.1720
100000.	666.67	1.7	1.70	255.00	32.13	17.7	7.1965
60000.	333.33	45.0	0.01	8099.99	1020.60	9.1	854.4357
400000.	1000.00	1.7	0.01	680.00	85.68	11.0	49.8128
208000.	1283.95	0.3	0.01	48.60	6.12	7.6	7.3823
83000.	1276.92	0.3	0.40	19.50	2.46	15.2	0.7405
83000.	1276.92	0.3	0.04	19.50	2.46	15.8	0.6846
96000.	1297.30	0.3	0.40	22.20	2.80	12.5	1.2538
95000.	1263.78	1.7	0.40	125.80	15.85	12.2	7.4644
10000.	400.00	1.7	0.30	42.50	5.35	9.1	4.4832
60000.	352.94	0.3	0.04	51.00	6.43	22.9	0.8608
60000.	400.00	1.7	0.04	255.00	32.13	12.2	15.1306
150000.	750.00	1.7	0.01	340.00	42.84	10.7	26.3499
100000.	666.67	0.3	1.70	45.00	5.67	10.7	3.4875
80000.	800.00	1.7	1.70	170.00	21.42	12.2	10.0871
80000.	888.89	0.3	1.70	27.00	3.40	10.7	2.0925
200000.	666.67	1.7	0.01	510.00	64.26	7.6	77.4688
120000.	480.00	1.7	45.00	425.00	53.55	7.6	64.5574
300000.	1200.00	0.3	0.04	75.00	9.45	10.7	5.8125
200000.	571.43	0.3	0.01	105.00	13.23	6.1	24.9210
100000.	285.71	0.3	0.01	105.00	13.23	15.2	3.9874
65000.	203.13	0.3	0.01	96.00	12.10	6.1	22.7849
110000.	647.06	0.3	0.40	51.00	6.43	6.1	12.1045
100000.	625.00	45.0	0.01	7199.99	907.20	12.2	427.2178
30000.	500.00	1.7	0.30	102.00	12.85	6.1	24.2090
200000.	888.89	15.0	0.01	3375.00	425.25	7.0	605.6965
125000.	500.00	1.7	0.04	425.00	53.55	10.7	32.9374
50000.	111.11	45.0	0.01	20249.98	2551.50	6.1	4806.2007
195000.	975.00	0.3	1.70	60.00	7.56	6.1	14.2406
100000.	625.00	0.3	0.30	48.00	6.05	12.2	2.8481
95000.	475.00	0.3	0.04	60.00	7.56	4.3	29.0624
75000.	750.00	1.7	0.04	170.00	21.42	12.5	9.6010
115000.	1150.00	0.3	0.04	30.00	3.78	7.6	4.5570
105000.	1050.00	0.3	0.04	30.00	3.78	14.3	1.2893
100000.	384.62	0.3	0.04	78.00	9.83	11.6	5.1282
150000.	937.50	1.7	0.30	272.00	34.27	10.7	21.0800
250000.	833.33	1.7	0.04	510.00	64.26	6.1	121.0451
200000.	800.00	15.0	0.01	3750.00	472.50	7.6	569.6238
135000.	900.00	15.0	0.01	2250.00	283.50	6.7	441.3408
90000.	750.00	1.7	0.01	204.00	25.70	15.2	7.7469
160000.	533.33	1.7	0.04	510.00	64.26	9.1	53.7978
50000.	333.33	1.7	0.30	255.00	32.13	9.1	26.8989
100000.	400.00	0.3	0.04	75.00	9.45	7.6	11.3925
100000.	625.00	0.3	0.04	48.00	6.05	5.5	14.0648
100000.	714.29	1.7	0.04	238.00	29.99	9.1	25.1056

Table C-1 (continued). RAW DATA
(ASPHALT SURVEY CALCULATIONS - PRIMARY COLLECTORS ONLY)

PRODUCTION RATE (TONS/YR)	HOURS OF OPERATION (HRS/YR)	EMISSION FACTORS PRIMARY (LB/TON)	EMISSION FACTORS SECONDARY (LB/TON)	EMISSION RATE (LB/HR)	EMISSION RATE (G/SEC)	STACK HEIGHT (METERS)	SEVERITY
30000.	214.29	0.3	1.70	42.00	5.29	12.2	2.4921
150000.	600.00	0.3	0.04	75.00	9.45	7.6	11.3925
300000.	1200.00	45.0	0.01	11249.99	1417.50	7.6	1708.8713
100000.	444.44	1.7	1.70	382.50	48.19	4.6	161.3934
40000.	320.00	1.7	0.30	212.50	26.77	12.2	12.6089
80000.	320.00	15.0	0.01	3750.00	472.50	10.4	307.9714
200000.	952.38	1.7	1.70	357.00	44.98	10.3	29.6669
12000.	300.00	0.3	0.04	12.00	1.51	9.1	1.2658
60000.	500.00	45.0	0.01	5399.99	680.40	3.0	5126.6138
40000.	384.62	0.3	1.70	31.20	3.93	18.3	0.8228
198000.	634.62	0.3	0.01	93.60	11.79	18.3	2.4684
90000.	608.11	0.3	1.70	44.40	5.59	18.3	1.1709
50000.	200.00	0.3	1.70	75.00	9.45	12.2	4.4502
80000.	666.67	0.3	0.04	36.00	4.54	9.1	3.7975
25000.	1250.00	1.7	1.70	34.00	4.28	4.6	14.3461
95000.	237.50	1.7	0.04	680.00	85.68	9.1	71.7304
50000.	416.67	1.7	1.70	204.00	25.70	7.3	33.6236
100000.	571.43	0.3	0.04	52.50	6.61	9.1	5.5380
26000.	148.57	1.7	1.70	297.50	37.48	10.7	23.0562
56000.	466.67	1.7	0.40	204.00	25.70	12.2	12.1045
102000.	453.33	1.7	0.01	382.50	48.19	9.4	37.7872
15000.	120.00	15.0	0.01	1875.00	236.25	3.0	1780.0742
100000.	526.32	15.0	0.01	2850.00	359.10	3.0	2705.7131
200000.	500.00	15.0	0.04	5999.99	756.00	9.1	632.9153
100000.	526.32	15.0	0.04	2850.00	359.10	9.1	300.6348
30000.	272.73	1.7	1.70	187.00	23.56	9.8	17.3372
50000.	384.62	0.3	1.70	39.00	4.91	18.3	1.0285
40000.	200.00	1.7	1.70	340.00	42.84	9.1	35.8652
250000.	735.29	0.3	0.04	102.00	12.85	9.1	10.7596
100000.	333.33	0.3	0.04	90.00	11.34	9.1	9.4937
50000.	277.78	0.3	0.01	54.00	6.80	3.0	51.2661
150000.	500.00	0.3	1.70	90.00	11.34	13.4	4.4134
40000.	571.43	1.7	0.04	119.00	14.99	4.3	57.6405
80000.	727.27	0.3	1.70	33.00	4.16	4.6	13.9241
29000.	376.62	0.3	1.70	23.10	2.91	15.2	0.8772
28000.	333.33	0.3	0.30	25.20	3.18	15.2	0.9570
68000.	764.04	0.3	0.30	26.70	3.36	18.3	0.7041
150000.	500.00	0.3	0.40	90.00	11.34	9.1	9.4937
50000.	250.00	0.3	0.01	60.00	7.56	10.4	4.9275
50000.	285.71	45.0	0.01	7874.99	992.25	5.5	2307.5037
75000.	750.00	0.3	0.01	30.00	3.78	12.8	1.6146
140000.	1400.00	1.7	0.04	170.00	21.42	9.8	15.7611
110000.	733.33	1.7	0.01	255.00	32.13	9.1	26.8989
60000.	600.00	0.3	0.04	30.00	3.78	6.1	7.1203
100000.	800.00	0.3	0.01	37.50	4.72	19.8	0.8426
100000.	444.44	15.0	0.04	3375.00	425.25	14.3	145.0491
85000.	459.46	1.7	45.00	314.50	39.63	10.7	24.3737
200000.	666.67	1.7	45.00	510.00	64.26	4.6	215.1912
100000.	400.00	45.0	0.01	11249.99	1417.50	10.7	871.8731
200000.	1333.33	0.3	0.04	45.00	5.67	12.2	2.6701

Table C-2. RAW DATA
(ASPHALT SURVEY CALCULATIONS - PRIMARY
AND SECONDARY COLLECTORS)

ASPHALT SURVEY CALCULATIONS--PRIMARY & SECONDARY COLLECTORS

PRODUCTION RATE (TONS/YR)	HOURS OF OPERATION (HRS/YR)	EMISSION FACTORS PRIMARY (LB/TON)	EMISSION FACTORS SECONDARY (LB/TON)	EMISSION RATE (LB/HR)	EMISSION RATE (G/SEC)	STACK HEIGHT (METERS)	SEVERITY
85000.	447.37	0.3	0.01	1.90	0.24	9.1	0.2004
60000.	500.00	0.3	0.30	36.00	4.54	13.7	1.6878
175000.	875.00	1.7	0.30	60.00	7.56	15.2	2.2785
30000.	166.67	1.7	0.04	7.20	0.91	15.2	0.2734
45000.	300.00	1.7	45.00	255.00	32.13	9.1	26.8989
100000.	666.67	45.0	0.01	1.50	0.19	3.0	1.4241
50000.	333.33	1.7	0.01	1.50	0.19	10.7	0.1162
65000.	650.00	0.3	0.04	4.00	0.50	13.7	0.1875
180000.	1200.00	0.3	0.04	6.00	0.76	10.7	0.4650
75000.	500.00	0.3	0.04	6.00	0.76	9.1	0.6329
100000.	1000.00	1.7	0.40	40.00	5.04	13.7	1.8753
60000.	600.00	1.7	0.01	1.00	0.13	6.1	0.2373
180000.	900.00	1.7	0.01	2.00	0.25	10.7	0.1550
300000.	1500.00	0.3	1.70	60.00	7.56	9.1	6.3292
70000.	466.67	0.3	0.30	45.00	5.67	9.1	4.7469
125000.	961.54	0.3	0.01	1.30	0.16	4.3	0.6297
100000.	500.00	0.3	0.04	8.00	1.01	15.2	0.3038
40000.	266.67	1.7	1.70	255.00	32.13	9.1	26.8989
50000.	200.00	0.3	1.70	75.00	9.45	12.2	4.4502
75000.	300.00	1.7	1.70	425.00	53.55	12.2	25.2177
50000.	250.00	0.3	1.70	60.00	7.56	10.7	4.6500
50000.	333.33	0.3	1.70	45.00	5.67	10.7	3.4875
75000.	600.00	15.0	0.30	37.50	4.72	12.2	2.2251
47000.	505.38	0.3	1.70	27.90	3.52	18.3	0.7358
73000.	500.00	0.3	0.01	1.46	0.18	18.3	0.0385
37000.	402.17	0.3	1.70	27.60	3.48	18.3	0.7279
250000.	1041.67	1.7	0.01	2.40	0.30	10.4	0.1971
140000.	700.00	1.7	0.04	8.00	1.01	15.2	0.3038
65000.	433.33	1.7	0.04	6.00	0.76	12.2	0.3560
120000.	1200.00	1.7	1.70	170.00	21.42	12.2	10.0871
120000.	800.00	1.7	1.70	255.00	32.13	12.2	15.1306
90000.	450.00	45.0	0.01	2.00	0.25	10.7	0.1550
120000.	600.00	1.7	0.01	2.00	0.25	12.2	0.1187
80000.	533.33	1.7	1.70	255.00	32.13	6.1	60.5225
70000.	583.33	1.7	0.01	1.20	0.15	7.6	0.1823
90000.	600.00	15.0	0.01	1.50	0.19	12.2	0.0890
220000.	1000.00	1.7	0.01	2.20	0.28	10.7	0.1705
80000.	470.59	45.0	0.01	1.70	0.21	9.1	0.1793
130000.	1300.00	1.7	1.70	170.00	21.42	12.2	10.0871
130000.	520.00	0.3	1.70	75.00	9.45	12.2	4.4502
100000.	357.14	0.3	1.70	84.00	10.58	10.4	6.8986
50000.	227.27	0.3	1.70	66.00	8.32	13.4	3.2365
280000.	3111.11	1.7	1.70	153.00	19.28	10.7	11.8575
40000.	320.00	1.7	0.04	5.00	0.63	18.3	0.1319
150000.	1200.00	1.7	1.70	212.50	26.77	10.7	16.4687
50000.	416.67	0.3	1.70	36.00	4.54	9.1	3.7975
270000.	1800.00	45.0	0.01	1.50	0.19	18.3	0.0396
100000.	833.33	1.7	0.04	4.80	0.60	7.6	0.7291
100000.	1111.11	1.7	0.04	3.60	0.45	7.6	0.5468
100000.	333.33	1.7	0.01	3.00	0.38	9.1	0.3165

Table C-2 (continued). RAW DATA
(ASPHALT SURVEY CALCULATIONS - PRIMARY
AND SECONDARY COLLECTORS)

PRODUCTION RATE (TONS/YR)	HOURS OF OPERATION (HRS/YR)	EMISSION FACTORS PRIMARY (LB/TON)	EMISSION FACTORS SECONDARY (LB/TON)	EMISSION RATE (LB/HR)	EMISSION RATE (G/SEC)	STACK HEIGHT (METERS)	SEVERITY
200000.	1333.33	1.7	0.01	1.50	0.19	7.6	0.2278
75000.	500.00	1.7	0.01	1.50	0.19	7.3	0.2472
75000.	600.00	1.7	0.04	5.00	0.63	12.2	0.2967
50000.	333.33	1.7	0.04	6.00	0.76	7.6	0.9114
90000.	500.00	45.0	0.01	1.80	0.23	9.8	0.1669
150000.	600.00	1.7	0.01	2.50	0.31	6.1	0.5934
50000.	500.00	0.3	0.30	30.00	3.78	9.1	3.1646
40000.	400.00	1.7	0.40	40.00	5.04	15.2	1.5190
60000.	600.00	0.3	0.40	30.00	3.78	12.2	1.7801
50000.	500.00	0.3	0.30	30.00	3.78	15.2	1.1392
300000.	1000.00	45.0	0.01	3.00	0.38	9.1	0.3165
100000.	500.00	1.7	1.70	340.00	42.84	8.5	41.1718
36000.	400.00	0.3	0.04	3.60	0.45	8.5	0.4359
60000.	800.00	0.3	1.70	22.50	2.83	7.3	3.7085
50000.	333.33	0.3	0.04	6.00	0.76	9.8	0.5563
123000.	492.00	1.7	0.04	10.00	1.26	12.8	0.5382
56000.	466.67	0.3	1.70	36.00	4.54	12.5	2.0332
50000.	416.67	1.7	1.70	204.00	25.70	10.4	16.7536
71000.	591.67	1.7	1.70	204.00	25.70	7.3	33.6236
80000.	615.38	0.3	0.30	39.00	4.91	9.1	4.1139
50000.	384.62	0.3	0.30	39.00	4.91	9.1	4.1139
70000.	700.00	0.3	0.30	30.00	3.78	7.6	4.5570
70000.	700.00	1.7	1.70	170.00	21.42	12.2	10.0871
100000.	571.43	1.7	0.01	1.75	0.22	9.1	0.1846
20000.	400.00	1.7	1.70	85.00	10.71	9.1	8.9663
21769.	362.82	1.7	1.70	102.00	12.85	9.1	10.7596
138194.	1105.55	0.3	1.70	37.50	4.72	12.2	2.2251
58000.	483.33	1.7	1.70	204.00	25.70	14.6	8.4059
79000.	526.67	15.0	0.30	45.00	5.67	12.2	2.6701
65000.	433.33	45.0	0.01	1.50	0.19	8.1	0.2028
15000.	250.00	1.7	0.04	2.40	0.30	12.2	0.1424
110000.	611.11	0.3	0.01	1.80	0.23	16.8	0.0565
130000.	812.50	0.3	0.01	1.60	0.20	12.5	0.0904
260000.	1040.00	0.3	0.01	2.50	0.31	23.8	0.0390
55000.	458.33	1.7	0.01	1.20	0.15	12.8	0.0646
45000.	1285.71	1.7	1.70	59.50	7.50	10.1	5.1871
100000.	454.55	1.7	0.04	8.80	1.11	9.1	0.9283
250000.	555.56	15.0	0.01	4.50	0.57	7.6	0.6835
60000.	480.00	15.0	0.01	1.25	0.16	6.1	0.2967
75000.	394.74	1.7	0.01	1.90	0.24	6.1	0.4510
190000.	844.44	1.7	0.01	2.25	0.28	13.7	0.1055
100000.	714.29	0.3	1.70	42.00	5.29	12.2	2.4921
90000.	600.00	0.3	0.04	6.00	0.76	14.6	0.2472
85000.	653.85	1.7	0.01	1.30	0.16	6.1	0.3085
10000.	111.11	0.3	1.70	27.00	3.40	18.3	0.7120
80000.	615.38	1.7	0.01	1.30	0.16	4.3	0.6297
80000.	571.43	0.3	1.70	42.00	5.29	13.7	1.9691
50000.	454.55	0.3	0.04	4.40	0.55	18.3	0.1160
125000.	625.00	0.3	0.30	60.00	7.56	9.1	6.3292
60000.	333.33	1.7	1.70	306.00	38.56	9.1	32.2787

Table C-2 (continued). RAW DATA
(ASPHALT SURVEY CALCULATIONS - PRIMARY
AND SECONDARY COLLECTORS)

PRODUCTION RATE (TONS/YR)	HOURS OF OPERATION (HRS/YR)	EMISSION FACTORS PRIMARY (LB/TON)	EMISSION FACTORS SECONDARY (LB/TON)	EMISSION RATE (LB/HR)	EMISSION RATE (G/SEC)	STACK HEIGHT (METERS)	SEVERITY
120000.	666.67	0.3	0.04	7.20	0.91	9.1	0.7595
100000.	333.33	0.3	0.01	3.00	0.38	3.0	2.8481
80000.	400.00	45.0	0.01	2.00	0.25	9.1	0.2110
90000.	375.00	0.3	0.01	2.40	0.30	3.0	2.2785
15000.	125.00	1.7	1.70	204.00	25.70	6.1	48.4180
20000.	333.33	0.3	0.04	2.40	0.30	9.1	0.2532
80000.	1428.57	1.7	1.70	95.20	12.00	18.0	2.5964
20000.	1428.57	1.7	1.70	23.80	3.00	12.2	1.4122
75000.	1442.31	1.7	0.01	0.52	0.07	11.3	0.0361
75000.	1442.31	1.7	0.01	0.52	0.07	11.3	0.0361
145000.	1450.00	15.0	0.01	1.00	0.13	9.1	0.1055
100000.	1449.28	0.3	0.04	2.76	0.35	24.4	0.0409
50000.	1428.57	1.7	1.70	59.50	7.50	16.2	2.0110
100000.	555.56	1.7	0.01	1.80	0.23	11.0	0.1319
30000.	300.00	15.0	0.04	4.00	0.50	11.6	0.2630
100000.	666.67	1.7	0.01	1.50	0.19	8.5	0.1816
150000.	789.47	1.7	0.01	1.90	0.24	3.0	1.8038
200000.	1333.33	45.0	0.01	1.50	0.19	13.7	0.0703
150000.	500.00	0.3	0.04	12.00	1.51	18.3	0.3165
80000.	533.33	1.7	1.70	255.00	32.13	4.6	107.5956
150000.	750.00	1.7	0.01	2.00	0.25	18.3	0.0527
80000.	666.67	0.3	0.04	4.80	0.60	9.1	0.5063
150000.	500.00	1.7	0.01	3.00	0.38	7.6	0.4557
75000.	312.50	1.7	0.01	2.40	0.30	9.1	0.2532
150000.	789.47	1.7	0.01	1.90	0.24	12.2	0.1127
100000.	625.00	45.0	0.01	1.60	0.20	15.2	0.0608
125000.	781.25	1.7	0.01	1.60	0.20	7.6	0.2430
50000.	277.78	1.7	0.01	1.80	0.23	7.6	0.2734
200000.	1600.00	1.7	0.01	1.25	0.16	3.7	0.8241
150000.	500.00	0.3	0.04	12.00	1.51	18.3	0.3165
350000.	1000.00	0.3	0.01	3.50	0.44	7.6	0.5316
85000.	607.14	0.3	0.04	5.60	0.71	6.1	1.3291
120000.	1000.00	1.7	0.04	4.80	0.60	19.8	0.1079
50000.	454.55	0.3	0.04	4.40	0.55	15.2	0.1671
150000.	600.00	1.7	0.30	75.00	9.45	12.2	4.4502
80000.	800.00	0.3	0.04	4.00	0.50	9.1	0.4219
225000.	1022.73	0.3	0.04	8.80	1.11	9.1	0.9283
70000.	700.00	1.7	0.30	30.00	3.78	7.6	4.5570
185000.	840.91	45.0	0.01	2.20	0.28	9.1	0.2321
125000.	1000.00	0.3	0.04	5.00	0.63	11.9	0.3121
75000.	357.14	0.3	0.04	8.40	1.06	9.1	0.8861
35000.	291.67	0.3	0.04	4.80	0.60	10.7	0.3720
100000.	400.00	0.3	45.00	75.00	9.45	10.1	6.5384
85000.	850.00	1.7	45.00	170.00	21.42	12.2	10.0871
100000.	555.56	0.3	0.01	1.80	0.23	16.8	0.0565
130000.	1181.82	1.7	0.01	1.10	0.14	33.5	0.0086
175000.	1060.61	1.7	0.30	49.50	6.24	9.1	5.2216
200000.	666.67	45.0	0.01	3.00	0.38	9.1	0.3165
20000.	666.67	1.7	0.30	9.00	1.13	7.3	1.4834
20000.	250.00	45.0	1.70	136.00	17.14	9.1	14.3461

Table C-2 (continued). RAW DATA
(ASPHALT SURVEY CALCULATIONS - PRIMARY
AND SECONDARY COLLECTORS)

PRODUCTION RATE (TONS/YR)	HOURS OF OPERATION (HRS/YR)	EMISSION FACTORS PRIMARY (LB/TON)	EMISSION FACTORS SECONDARY (LB/TON)	EMISSION RATE (LB/HR)	EMISSION RATE (G/SEC)	STACK HEIGHT (METERS)	SEVERITY
250000.	714.29	1.7	0.04	14.00	1.76	12.2	0.8307
200000.	1666.67	45.0	0.30	36.00	4.54	7.6	5.4684
150000.	750.00	45.0	0.01	2.00	0.25	12.2	0.1187
50000.	500.00	1.7	0.30	30.00	3.78	12.2	1.7801
250000.	1250.00	0.3	0.01	2.00	0.25	6.1	0.4747
50000.	500.00	1.7	0.30	30.00	3.78	12.2	1.7801
70000.	388.89	0.3	0.04	7.20	0.91	9.1	0.7595
75000.	535.71	1.7	0.04	5.60	0.71	4.9	2.0768
90000.	720.00	0.3	1.70	37.50	4.72	9.1	3.9557
160000.	842.11	1.7	1.70	323.00	40.70	15.2	12.2659
100000.	500.00	1.7	0.04	8.00	1.01	4.6	3.3755
40000.	400.00	1.7	0.04	4.00	0.50	4.6	1.6878
175000.	700.00	15.0	0.01	2.50	0.31	4.6	1.0549
100000.	666.67	1.7	0.04	6.00	0.76	10.7	0.4650
75000.	625.00	1.7	0.04	4.80	0.60	7.6	0.7291
265000.	883.33	15.0	0.01	3.00	0.38	2.4	4.4502
50000.	625.00	1.7	1.70	136.00	17.14	9.1	14.3461
85000.	696.72	0.3	0.01	1.22	0.15	9.1	0.1287
300000.	1000.00	15.0	0.01	3.00	0.38	7.9	0.4213
100000.	666.67	45.0	0.01	1.50	0.19	6.1	0.3560
150000.	750.00	1.7	0.01	2.00	0.25	6.1	0.4747
75000.	375.00	0.3	0.04	8.00	1.01	12.8	0.4306
65000.	866.67	0.3	0.04	3.00	0.38	9.1	0.3165
65000.	866.67	0.3	0.04	3.00	0.38	9.1	0.3165
65000.	433.33	45.0	0.01	1.50	0.19	9.8	0.1391
100000.	500.00	1.7	0.01	2.00	0.25	9.1	0.2110
50000.	625.00	0.3	0.04	3.20	0.40	9.1	0.3376
80000.	888.89	1.7	0.04	3.60	0.45	9.1	0.3797
150000.	1500.00	1.7	1.70	170.00	21.42	6.1	40.3484
150000.	1200.00	1.7	0.01	1.25	0.16	6.1	0.2967
100000.	500.00	1.7	1.70	340.00	42.84	11.6	22.3537
200000.	1052.63	1.7	0.01	1.90	0.24	4.6	0.8017
200000.	833.33	0.3	0.30	72.00	9.07	12.2	4.2722
130000.	650.00	1.7	0.01	2.00	0.25	18.3	0.0527
100000.	555.56	1.7	1.70	306.00	38.56	9.1	32.2787
180000.	720.00	1.7	0.01	2.50	0.31	17.7	0.0706
50000.	333.33	0.3	0.04	6.00	0.76	19.8	0.1348
100000.	800.00	0.3	0.30	37.50	4.72	9.1	3.9557
70000.	400.00	1.7	1.70	297.50	37.48	15.2	11.2975
90000.	642.86	1.7	0.30	42.00	5.29	10.7	3.2550
170000.	680.00	1.7	0.01	2.50	0.31	12.2	0.1483
80000.	290.91	0.3	1.70	82.50	10.39	15.2	3.1329
160000.	533.33	45.0	0.01	3.00	0.38	9.1	0.3165
48000.	600.00	0.3	0.01	0.80	0.10	13.7	0.0375
90000.	900.00	1.7	0.04	4.00	0.50	13.7	0.1875
100000.	1333.33	1.7	0.01	0.75	0.09	6.1	0.1780
40000.	571.43	0.3	0.30	21.00	2.65	10.7	1.6275
150000.	833.33	1.7	0.04	7.20	0.91	12.2	0.4272
30000.	250.00	1.7	1.70	204.00	25.70	9.8	16.9133
130000.	650.00	0.3	0.04	8.00	1.01	9.1	0.8439

Table C-2 (continued). RAW DATA
(ASPHALT SURVEY CALCULATIONS - PRIMARY
AND SECONDARY COLLECTORS)

PRODUCTION RATE (TONS/YR)	HOURS OF OPERATION (HRS/YR)	EMISSION FACTORS PRIMARY (LB/TON)	EMISSION FACTORS SECONDARY (LB/TON)	EMISSION RATE (LB/HR)	EMISSION RATE (G/SEC)	STACK HEIGHT (METERS)	SEVERITY
125000.	694.44	0.3	0.04	7.20	0.91	19.1	0.1750
125000.	735.29	1.7	0.01	1.70	0.21	5.5	0.4981
50000.	1000.00	1.7	0.30	15.00	1.89	10.7	1.1625
35000.	466.67	1.7	0.01	0.75	0.09	6.1	0.1780
152000.	675.56	1.7	1.70	382.50	48.19	10.7	29.6437
211000.	496.47	1.7	0.01	4.25	0.54	10.7	0.3294
144029.	758.05	1.7	0.01	1.90	0.24	10.7	0.1472
180000.	720.00	1.7	0.01	2.50	0.31	10.7	0.1937
150000.	666.67	1.7	0.01	2.25	0.28	10.7	0.1744
92000.	408.89	1.7	0.01	2.25	0.28	10.7	0.1744
176000.	782.22	1.7	0.01	2.25	0.28	10.7	0.1744
210000.	840.00	45.0	0.01	2.50	0.31	10.7	0.1937
200000.	909.09	0.3	0.01	2.20	0.28	3.7	1.4504
150000.	750.00	45.0	0.01	2.00	0.25	3.0	1.8987
100000.	666.67	1.7	0.30	45.00	5.67	8.5	5.4492
100000.	666.67	1.7	0.30	45.00	5.67	8.5	5.4492
45000.	450.00	1.7	0.01	1.00	0.13	9.1	0.1055
200000.	1250.00	1.7	0.01	1.60	0.20	9.1	0.1688
50000.	500.00	0.3	0.01	1.00	0.13	4.6	0.4219
50000.	555.56	1.7	0.01	0.90	0.11	6.1	0.2136
275000.	763.89	1.7	0.01	3.60	0.45	9.1	0.3797
100000.	666.67	1.7	0.30	45.00	5.67	6.1	10.6804
100000.	666.67	1.7	0.30	45.00	5.67	6.1	10.6804
90000.	692.31	1.7	0.04	5.20	0.66	9.1	0.5485
50000.	500.00	1.7	1.70	170.00	21.42	6.1	40.3484
135000.	1350.00	15.0	0.01	1.00	0.13	4.6	0.4219
50000.	333.33	0.3	1.70	45.00	5.67	13.7	2.1097
255000.	1378.38	0.3	0.01	1.85	0.23	4.9	0.6861
100000.	555.56	1.7	0.01	1.80	0.23	6.1	0.4272
80000.	800.00	0.3	0.04	4.00	0.50	10.7	0.3100
100000.	666.67	1.7	0.04	6.00	0.76	10.7	0.4650
80000.	533.33	0.3	0.04	6.00	0.76	6.1	1.4241
40000.	571.43	0.3	0.04	2.80	0.35	12.2	0.1661
40000.	444.44	45.0	0.01	0.90	0.11	12.2	0.0534
25000.	208.33	0.3	0.04	4.80	0.60	9.1	0.5063
10000.	166.67	0.3	0.04	2.40	0.30	9.1	0.2532
60000.	500.00	0.3	0.04	4.80	0.60	3.0	4.5570
30000.	250.00	0.3	0.01	1.20	0.15	3.0	1.1392
20000.	266.67	0.3	1.70	22.50	2.83	9.1	2.3734
30000.	166.67	0.3	0.04	7.20	0.91	9.1	0.7595
20000.	333.33	0.3	1.70	18.00	2.27	9.1	1.8987
20000.	200.00	0.3	0.01	1.00	0.13	3.0	0.9494
30000.	333.33	0.3	0.04	3.60	0.45	9.1	0.3797
30000.	500.00	1.7	1.70	102.00	12.85	9.1	10.7596
50000.	1000.00	0.3	0.30	15.00	1.89	7.6	2.2785
225000.	900.00	1.7	0.01	2.50	0.31	15.2	0.0949
60000.	400.00	1.7	0.01	1.50	0.19	15.2	0.0570
50000.	250.00	1.7	1.70	340.00	42.84	15.2	12.9115
330000.	1320.00	1.7	1.70	425.00	53.55	15.2	16.1393
95000.	633.33	1.7	1.70	255.00	32.13	15.2	9.6836

Table C-2 (continued). RAW DATA
(ASPHALT SURVEY CALCULATIONS - PRIMARY
AND SECONDARY COLLECTORS)

PRODUCTION RATE (TONS/YR)	HOURS OF OPERATION (HRS/YR)	EMISSION FACTORS PRIMARY (LB/TON)	EMISSION FACTORS SECONDARY (LB/TON)	EMISSION RATE (LB/HR)	EMISSION RATE (G/SEC)	STACK HEIGHT (METERS)	SEVERITY
150000.	352.94	0.3	0.01	4.25	0.54	15.2	0.1614
320000.	1280.00	1.7	0.01	2.50	0.31	15.2	0.0949
140000.	700.00	1.7	0.01	2.00	0.25	15.2	0.0759
150000.	750.00	1.7	0.01	2.00	0.25	15.2	0.0759
200000.	533.33	0.3	0.01	3.75	0.47	15.2	0.1424
60000.	240.00	1.7	1.70	425.00	53.55	15.2	16.1393
500000.	952.38	0.3	0.01	5.25	0.66	15.2	0.1994
120000.	320.00	1.7	0.01	3.75	0.47	15.2	0.1424
300000.	800.00	1.7	1.70	637.50	80.32	15.2	24.2090
80000.	666.67	1.7	0.01	1.20	0.15	15.2	0.0456
130000.	481.48	1.7	1.70	459.00	57.83	12.2	27.2351
100000.	625.00	0.3	0.04	6.40	0.81	15.8	0.2247
50000.	500.00	0.3	0.01	1.00	0.13	9.1	0.1055
200000.	1000.00	1.7	1.70	340.00	42.84	9.1	35.8652
40000.	266.67	1.7	0.01	1.50	0.19	4.6	0.6329
120000.	600.00	1.7	0.04	8.00	1.01	15.2	0.3038
200000.	625.00	0.3	0.04	12.80	1.61	1.2	75.9498
50000.	416.67	0.3	0.04	4.80	0.60	18.3	0.1266
125000.	694.44	0.3	0.04	7.20	0.91	14.3	0.3094
100000.	666.67	0.3	1.70	45.00	5.67	12.2	2.6701
80000.	533.33	0.3	0.04	9.60	1.21	16.8	0.3013
100000.	555.56	0.3	0.04	7.20	0.91	7.6	1.0937
60000.	480.00	1.7	1.70	212.50	26.77	9.1	22.4158
450000.	1590.11	0.3	0.04	11.32	1.43	10.4	0.9297
60000.	1000.00	1.7	1.70	102.00	12.85	8.8	11.5144
100000.	666.67	1.7	1.70	255.00	32.13	6.1	60.5225
75000.	1071.43	1.7	1.70	119.00	14.99	9.1	12.5528
150000.	1000.00	0.3	0.04	6.00	0.76	7.6	0.9114
75000.	300.00	1.7	0.30	75.00	9.45	16.5	2.4418
40000.	200.00	1.7	0.30	60.00	7.56	18.3	1.5823
150000.	681.82	1.7	0.30	66.00	8.32	19.8	1.4830
70000.	411.76	0.3	1.70	51.00	6.43	10.7	3.9525
50000.	588.24	1.7	0.01	0.85	0.11	9.1	0.0897
140000.	933.33	1.7	0.01	1.50	0.19	12.2	0.0890
140000.	777.78	0.3	0.04	7.20	0.91	12.2	0.4272
80000.	592.59	0.3	0.30	40.50	5.10	18.3	1.0680
75000.	625.00	0.3	0.30	36.00	4.54	12.2	2.1361
100000.	1111.11	1.7	1.70	153.00	19.28	7.3	25.2177
150000.	1000.00	0.3	1.70	45.00	5.67	10.7	3.4875
100000.	1000.00	1.7	0.04	4.00	0.50	15.2	0.1519
50000.	333.33	1.7	0.01	1.50	0.19	9.1	0.1582
100000.	666.67	1.7	0.30	45.00	5.67	7.6	6.8355
150000.	666.67	45.0	0.01	2.25	0.28	15.2	0.0854
130000.	619.05	0.3	1.70	63.00	7.94	9.1	6.6456
100000.	666.67	1.7	0.01	1.50	0.19	9.1	0.1582
55000.	220.00	45.0	0.01	2.50	0.31	11.7	0.1601
200000.	666.67	1.7	0.01	3.00	0.38	12.2	0.1780
70000.	700.00	1.7	45.00	170.00	21.42	10.3	14.1271
200000.	666.67	0.3	0.01	3.00	0.38	12.2	0.1780
150000.	810.81	1.7	0.01	1.85	0.23	10.7	0.1434

Table C-2 (continued). RAW DATA
(ASPHALT SURVEY CALCULATIONS - PRIMARY
AND SECONDARY COLLECTORS)

PRODUCTION RATE (TONS/YR)	HOURS OF OPERATION (HRS/YR)	EMISSION FACTORS PRIMARY (LB/TON)	EMISSION FACTORS SECONDARY (LB/TON)	EMISSION RATE (LB/HR)	EMISSION RATE (G/SEC)	STACK HEIGHT (METERS)	SEVERITY
40000.	400.00	1.7	0.01	1.00	0.13	12.2	0.0593
60000.	600.00	1.7	0.01	1.00	0.13	9.1	0.1055
150000.	857.14	1.7	0.01	1.75	0.22	9.1	0.1846
350000.	1750.00	15.0	0.01	2.00	0.25	7.6	0.3038
100000.	444.44	0.3	0.01	2.25	0.28	10.4	0.1848
100000.	666.67	0.3	0.04	6.00	0.76	9.8	0.5563
100000.	666.67	1.7	1.70	255.00	32.13	17.7	7.1965
60000.	333.33	45.0	0.01	1.80	0.23	9.1	0.1899
400000.	1000.00	1.7	0.01	4.00	0.50	11.0	0.2930
208000.	1283.95	0.3	0.01	1.62	0.20	7.6	0.2461
83000.	1276.92	0.3	0.40	19.50	2.46	15.2	0.7405
83000.	1276.92	0.3	0.04	2.60	0.33	15.8	0.0913
96000.	1297.30	0.3	0.40	22.20	2.80	12.5	1.2538
95000.	1283.78	1.7	0.40	29.60	3.73	12.2	1.7563
10000.	400.00	1.7	0.30	7.50	0.94	9.1	0.7911
60000.	352.94	0.3	0.04	6.80	0.86	22.9	0.1148
60000.	400.00	1.7	0.04	6.00	0.76	12.2	0.3560
150000.	750.00	1.7	0.01	2.00	0.25	10.7	0.1550
100000.	666.67	0.3	1.70	45.00	5.67	10.7	3.4875
80000.	800.00	1.7	1.70	170.00	21.42	12.2	10.0871
80000.	888.89	0.3	1.70	27.00	3.40	10.7	2.0925
200000.	666.67	1.7	0.01	3.00	0.38	7.6	0.4557
120000.	480.00	1.7	45.00	425.00	53.55	7.6	64.5574
300000.	1200.00	0.3	0.04	10.00	1.26	10.7	0.7750
200000.	571.43	0.3	0.01	3.50	0.44	6.1	0.8307
100000.	285.71	0.3	0.01	3.50	0.44	15.2	0.1329
65000.	203.13	0.3	0.01	3.20	0.40	6.1	0.7595
110000.	647.06	0.3	0.40	51.00	6.43	6.1	12.1045
100000.	625.00	45.0	0.01	1.60	0.20	12.2	0.0949
30000.	500.00	1.7	0.30	18.00	2.27	6.1	4.2722
200000.	888.89	15.0	0.01	2.25	0.28	7.0	0.4038
125000.	500.00	1.7	0.04	10.00	1.26	10.7	0.7750
50000.	111.11	45.0	0.01	4.50	0.57	6.1	1.0680
195000.	975.00	0.3	1.70	60.00	7.56	6.1	14.2406
100000.	625.00	0.3	0.30	48.00	6.05	12.2	2.8481
95000.	475.00	0.3	0.04	8.00	1.01	4.3	3.8750
75000.	750.00	1.7	0.04	4.00	0.50	12.5	0.2259
115000.	1150.00	0.3	0.04	4.00	0.50	7.6	0.6076
105000.	1050.00	0.3	0.04	4.00	0.50	14.3	0.1719
100000.	384.62	0.3	0.04	10.40	1.31	11.6	0.6838
150000.	937.50	1.7	0.30	48.00	6.05	10.7	3.7200
250000.	833.33	1.7	0.04	12.00	1.51	6.1	2.8481
200000.	800.00	15.0	0.01	2.50	0.31	7.6	0.3797
135000.	900.00	15.0	0.01	1.50	0.19	6.7	0.2942
90000.	750.00	1.7	0.01	1.20	0.15	15.2	0.0456
160000.	533.33	1.7	0.04	12.00	1.51	9.1	1.2658
50000.	333.33	1.7	0.30	45.00	5.67	9.1	4.7469
100000.	400.00	0.3	0.04	10.00	1.26	7.6	1.5190
100000.	625.00	0.3	0.04	6.40	0.81	5.5	1.8753
100000.	714.29	1.7	0.04	5.60	0.71	9.1	0.5907

Table C-2 (continued). RAW DATA
(ASPHALT SURVEY CALCULATIONS - PRIMARY
AND SECONDARY COLLECTORS)

PRODUCTION RATE (TONS/YR)	HOURS OF OPERATION (HRS/YR)	EMISSION FACTORS PRIMARY (LB/TON)	EMISSION FACTORS SECONDARY (LB/TON)	EMISSION RATE (LB/HR)	EMISSION RATE (G/SEC)	STACK HEIGHT (METERS)	SEVERITY
30000.	214.29	0.3	1.70	42.00	5.29	12.2	2.4921
150000.	600.00	0.3	0.04	10.00	1.26	7.6	1.5190
300000.	1200.00	45.0	0.01	2.50	0.31	7.6	0.3797
100000.	444.44	1.7	1.70	382.50	48.19	4.6	161.3934
40000.	320.00	1.7	0.30	37.50	4.72	12.2	2.2251
80000.	320.00	15.0	0.01	2.50	0.31	10.4	0.2053
200000.	952.38	1.7	1.70	357.00	44.98	10.3	29.6669
12000.	300.00	0.3	0.04	1.60	0.20	9.1	0.1688
60000.	500.00	45.0	0.01	1.20	0.15	3.0	1.1392
40000.	384.62	0.3	1.70	31.20	3.93	18.3	0.8228
198000.	634.62	0.3	0.01	3.12	0.39	18.3	0.0823
90000.	608.11	0.3	1.70	44.40	5.59	18.3	1.1709
50000.	200.00	0.3	1.70	75.00	9.45	12.2	4.4502
80000.	666.67	0.3	0.04	4.80	0.60	9.1	0.5063
25000.	1250.00	1.7	1.70	34.00	4.28	4.6	14.3461
95000.	237.50	1.7	0.04	16.00	2.02	9.1	1.6878
50000.	416.67	1.7	1.70	204.00	25.70	7.3	33.6236
100000.	571.43	0.3	0.04	7.00	0.88	9.1	0.7384
26000.	148.57	1.7	1.70	297.50	37.48	10.7	23.0562
56000.	466.67	1.7	0.40	48.00	6.05	12.2	2.8481
102000.	453.33	1.7	0.01	2.25	0.28	9.4	0.2223
15000.	120.00	15.0	0.01	1.25	0.16	3.0	1.1867
100000.	526.32	15.0	0.01	1.90	0.24	3.0	1.8038
200000.	500.00	15.0	0.04	16.00	2.02	9.1	1.6878
100000.	526.32	15.0	0.04	7.60	0.96	9.1	0.8017
30000.	272.73	1.7	1.70	187.00	23.56	9.8	17.3372
50000.	384.62	0.3	1.70	39.00	4.91	18.3	1.0285
40000.	200.00	1.7	1.70	340.00	42.84	9.1	35.8652
250000.	735.29	0.3	0.04	13.60	1.71	9.1	1.4346
100000.	533.33	0.3	0.04	12.00	1.51	9.1	1.2658
50000.	277.78	0.3	0.01	1.80	0.23	3.0	1.7089
150000.	500.00	0.3	1.70	90.00	11.34	13.4	4.4134
40000.	571.43	1.7	0.04	2.80	0.35	4.3	1.3562
80000.	727.27	0.3	1.70	33.00	4.16	4.6	13.9241
29000.	376.62	0.3	1.70	23.10	2.91	15.2	0.8772
28000.	333.33	0.3	0.30	25.20	3.18	15.2	0.9570
68000.	764.04	0.3	0.30	26.70	3.36	18.3	0.7041
150000.	500.00	0.3	0.40	90.00	11.34	9.1	9.4937
50000.	250.00	0.3	0.01	2.00	0.25	10.4	0.1643
50000.	285.71	45.0	0.01	1.75	0.22	5.5	0.5128
75000.	750.00	0.3	0.01	1.00	0.13	12.8	0.0538
140000.	1400.00	1.7	0.04	4.00	0.50	9.8	0.3708
110000.	733.33	1.7	0.01	1.50	0.19	9.1	0.1582
60000.	600.00	0.3	0.04	4.00	0.50	6.1	0.9494
100000.	800.00	0.3	0.01	1.25	0.16	19.8	0.0281
100000.	444.44	15.0	0.04	9.00	1.13	14.3	0.3868
85000.	459.46	1.7	45.00	314.50	39.63	10.7	24.3737
200000.	666.67	1.7	45.00	510.00	64.26	4.6	215.1912
100000.	400.00	45.0	0.01	2.50	0.31	10.7	0.1937
200000.	1333.33	0.3	0.04	6.00	0.76	12.2	0.3560

Table C-3. EMISSION RATE FOR PRIMARY COLLECTORS (UNCONTROLLED EMISSIONS) (lb/hr)

STATISTICS ON EMISSION RATE IN G/SEC

SAMPLE SIZE= 400 POPULATION SIZE= 4300.000

EST POPULATION MEAN= 123.8795 EST POP STD DEV= 320.3203

EST STD ERROR OF MEAN= 15.25468 95 PERCENT CONF LIM= 29.89917

MINIMUM= 1.512000 MAXIMUM= 2551.500 RANGE= 2549.988

LOWER LIMIT= 93.98038 MEAN= 123.8795 UPPER LIMIT= 153.7787

745.87 lb/hr

ARRAY OF CLASS LIMITS

1.51	3.18	6.68	14.1	29.6	62.1	131.	275.
578.	1214	2553					

ARRAY OF CLASS FREQUENCIES

20 80 69 63 103 14 6 15 20 10

CLASS INTERVALS				ACTUAL FREQUENCY	CUMULATIVE FREQUENCY
FROM	0.1512E+01	TO	0.3179E+01	0.5000000E-01	0.5000000E-01
FROM	0.3179E+01	TO	0.6684E+01	0.2000000E+00	0.2500000E+00
FROM	0.6684E+01	TO	0.1405E+02	0.1725000E+00	0.4225000E+00
FROM	0.1405E+02	TO	0.2955E+02	0.1575000E+00	0.5800000E+00
FROM	0.2955E+02	TO	0.6213E+02	0.2575000E+00	0.8375000E+00
FROM	0.6213E+02	TO	0.1306E+03	0.3500000E-01	0.8725000E+00
FROM	0.1306E+03	TO	0.2747E+03	0.1500000E-01	0.8875000E+00
FROM	0.2747E+03	TO	0.5776E+03	0.3750000E-01	0.9250000E+00
FROM	0.5776E+03	TO	0.1214E+04	0.5000000E-01	0.9750000E+00
FROM	0.1214E+04	TO	0.2553E+04	0.2500000E-01	0.1000000E+01

Table C-4. EMISSION RATE FOR PRIMARY AND SECONDARY COLLECTORS (CONTROLLED EMISSIONS) (lb/hr)

STATISTICS ON EMISSION RATE IN G/SEC

SAMPLE SIZE= 400 POPULATION SIZE= 4300.000

EST POPULATION MEAN= 6.089775 EST POP STD DEV= 12.14565

EST STD ERROR OF MEAN= .5784145 95 PERCENT CONF LIM= 1.133692

MINIMUM= 0.6552000E-01 MAXIMUM= 80.32498 RANGE= 80.25946

LOWER LIMIT= 4.956082 MEAN= 6.089775 UPPER LIMIT= 7.223467

39.36 lb/hr 48.33 lbs/hr 57.329 lb/hr

ARRAY OF CLASS LIMITS

0.655E-01 .133 .272 .553 1.13 2.29 4.67 9.52

19.4 39.5 80.4

ARRAY OF CLASS FREQUENCIES

18 80 76 60 24 29 53 14 29 17

CLASS INTERVALS	ACTUAL FREQUENCY	CUMULATIVE FREQUENCY
FROM 0.6552E-01 TO 0.1334E+00	0.4500000E-01	0.4500000E-01
FROM 0.1334E+00 TO 0.2717E+00	0.2000000E+00	0.2450000E+00
FROM 0.2717E+00 TO 0.5534E+00	0.1900000E+00	0.4350000E+00
FROM 0.5534E+00 TO 0.1127E+01	0.1500000E+00	0.5850000E+00
FROM 0.1127E+01 TO 0.2295E+01	0.6000000E-01	0.6450000E+00
FROM 0.2295E+01 TO 0.4674E+01	0.7250000E-01	0.7175000E+00
FROM 0.4674E+01 TO 0.9518E+01	0.1325000E+00	0.8500000E+00
FROM 0.9518E+01 TO 0.1938E+02	0.3500000E-01	0.8850001E+00
FROM 0.1938E+02 TO 0.3947E+02	0.7250000E-01	0.9575000E+00
FROM 0.3947E+02 TO 0.8038E+02	0.4250000E-01	0.1000000E+01

Table C-5. SEVERITY FOR PRIMARY COLLECTORS (UNCONTROLLED EMISSIONS)

STATISTICS FOR SEVERITY

SAMPLE SIZE= 400 POPULATION SIZE= 4300.000

EST POPULATION MEAN= 187.4983 EST POP STD DEV= 772.1564

EST STD ERROR OF MEAN= 36.77256 95 PERCENT CONF LIM= 72.07421

MINIMUM= .3070628 MAXIMUM= 8544.356 RANGE= 8544.050

LOWER LIMIT= 115.4241 MEAN= 187.4983 UPPER LIMIT= 259.5725

ARRAY OF CLASS LIMITS

.307 .855 2.38 6.62 18.4 51.2 143. 397.

0.110E+04 0.307E+04 0.855E+04

ARRAY OF CLASS FREQUENCIES

9 51 74 88 92 34 14 24 9 5

CLASS INTERVALS				ACTUAL FREQUENCY	CUMULATIVE FREQUENCY
FROM	0.3071E+00	TO	0.8545E+00	0.2250000E-01	0.2250000E-01
FROM	0.8545E+00	TO	0.2378E+01	0.1275000E+00	0.1500000E+00
FROM	0.2378E+01	TO	0.6618E+01	0.1850000E+00	0.3350000E+00
FROM	0.6618E+01	TO	0.1842E+02	0.2200000E+00	0.5550000E+00
FROM	0.1842E+02	TO	0.5125E+02	0.2300000E+00	0.7850000E+00
FROM	0.5125E+02	TO	0.1426E+03	0.8499999E-01	0.8700000E+00
FROM	0.1426E+03	TO	0.3969E+03	0.3500000E-01	0.9050000E+00
FROM	0.3969E+03	TO	0.1104E+04	0.6000000E-01	0.9650000E+00
FROM	0.1104E+04	TO	0.3074E+04	0.2250000E-01	0.9875000E+00
FROM	0.3074E+04	TO	0.8553E+04	0.1250000E-01	0.1000000E+01

Table C-6. SEVERITY FOR PRIMARY AND SECONDARY COLLECTORS (CONTROLLED EMISSIONS)

STATISTICS FOR SEVERITY

SAMPLE SIZE= 400 POPULATION SIZE= 4300.000

EST POPULATION MEAN= 5.593296 EST POP STD DEV= 17.15360

EST STD ERROR OF MEAN= .8169093 95 PERCENT CONF LIM= 1.601142

MINIMUM= 0.8630665E-02 MAXIMUM= 215.1912 RANGE= 215.1826

LOWER LIMIT= 3.992154 MEAN= 5.593296 UPPER LIMIT= 7.194438

ARRAY OF CLASS LIMITS

0.863E-02 0.238E-01 0.654E-01 .180 .495 1.36 3.75 10.3

28.4 78.3 215.

ARRAY OF CLASS FREQUENCIES

1 20 65 89 69 61 42 34 16 3

CLASS INTERVALS			ACTUAL FREQUENCY	CUMULATIVE FREQUENCY
FROM 0.8631E-02	TO	0.2376E-01	0.2500000E-02	0.2500000E-02
FROM 0.2376E-01	TO	0.6539E-01	0.5000000E-01	0.5250000E-01
FROM 0.6539E-01	TO	0.1800E+00	0.1625000E+00	0.2150000E+00
FROM 0.1800E+00	TO	0.4954E+00	0.2225000E+00	0.4375000E+00
FROM 0.4954E+00	TO	0.1363E+01	0.1725000E+00	0.6100000E+00
FROM 0.1363E+01	TO	0.3753E+01	0.1525000E+00	0.7625000E+00
FROM 0.3753E+01	TO	0.1033E+02	0.1050000E+00	0.8675001E+00
FROM 0.1033E+02	TO	0.2843E+02	0.8499999E-01	0.9525000E+00
FROM 0.2843E+02	TO	0.7826E+02	0.4000000E-01	0.9925001E+00
FROM 0.7826E+02	TO	0.2154E+03	0.7500000E-02	0.1000000E+01

APPENDIX D. DERIVATION OF SOURCE SEVERITY EQUATIONS

(T. R. Blackwood and E. C. Eimutis)

1. SUMMARY OF SOURCE SEVERITY EQUATIONS

The source severity of pollutants may be calculated using the mass emission rate, Q, the height of the emissions, H, and the ambient air quality standard, AAQS. The equations summarized in Table D-1 are developed in detail in this appendix.

Table D-1. POLLUTANT SEVERITY EQUATIONS FOR ELEVATED SOURCES

Pollutant	Severity equation
Particulate	$S = \frac{70\ Q}{H^2}$
SO_x	$S = \frac{50\ Q}{H^2}$
NO_x	$S = \frac{315\ Q}{H^{2.1}}$
Hydrocarbons	$S = \frac{162\ Q}{H^2}$
CO	$S = \frac{0.78\ Q}{H^2}$

2. DERIVATION OF χ_{max} FOR USE WITH U.S. AVERAGE CONDITIONS

The most widely accepted formula for predicting downwind ground level concentrations from a point source is:[51]

[51] Turner, D. B. Workbook of Atmospheric Dispersion Estimates. U.S. Department of Health, Education, and Welfare. Cincinnati. Public Health Service Publication No. 999-AP-26. May 1970. 84 p.

$$\chi = \frac{Q}{\pi \sigma_y \sigma_z u} \exp\left[-\frac{1}{2}\left(\frac{y}{\sigma_y}\right)^2\right] \exp\left[-\frac{1}{2}\left(\frac{H}{\sigma_z}\right)^2\right] \qquad \text{(D-1)}$$

where χ = downwind ground level concentration at reference coordinate x and y with emission height of H, g/m^3

Q = mass emission rate, g/s

σ_y = standard deviation of horizontal dispersion, m

σ_z = standard deviation of vertical dispersion, m

u = wind speed, m/s

y = horizontal distance from centerline of dispersion, m

H = height of emission release, m

x = downwind dispersion distance from source of emission release, m

π = 3.14

We assume that χ_{max} occurs when $x >> 0$ and $y = 0$. For a given stability class, standard deviations of horizontal and vertical dispersion have often been expressed as a function of downwind distance by power law relationships as follows:[52]

$$\sigma_y = ax^b \qquad \text{(D-2)}$$

$$\sigma_z = cx^d + f \qquad \text{(D-3)}$$

Values for a, b, c, d and f are given in Tables D-2 and D-3. Substituting these general equations into Equation D-1 yields:

$$\chi = \frac{Q}{ac\pi ux^{b+d} + a\pi ufx^b} \exp\left[-\frac{H^2}{2(cx^d + f)^2}\right] \qquad \text{(D-4)}$$

[52]Martin, D. O., and J. A. Tikvart. A General Atmospheric Diffusion Model for Estimating the Effects of Air Quality of One or More Sources. (Presented at 61st Annual Meeting of the Air Pollution Control Association. St. Paul. June 23-27, 1968.) 18 p.

Table D-2. VALUES OF a FOR THE COMPUTATION OF σ_y[a,53]

Stability class	a
A	0.3658
B	0.2751
C	0.2089
D	0.1471
E	0.1046
F	0.0722

[a]For Equation D-2: $\sigma_y = ax^b$
where x = downwind distance
b = 0.9031

Assuming that χ_{max} occurs at x < 100 m or the stability class is C, then f = 0 and Equation D-4 becomes:

$$\chi = \frac{Q}{ac\pi u x^{b+d}} \exp\left[\frac{-H^2}{2c^2x^{2d}}\right] \qquad \text{(D-5)}$$

For convenience, let:

$$A_R = \frac{Q}{ac\pi u} \text{ and } B_R = \frac{-H^2}{2c^2}$$

so that Equation H-5 reduces to:

$$\chi = A_R x^{-(b+d)} \exp\left[\frac{B_R}{x^{2d}}\right] \qquad \text{(D-6)}$$

[53]Tadmor, J. and Y. Gur. Analytical Expressions for the Vertical and Lateral Dispersion Coefficients in Atmospheric Diffusion. Atmospheric Environment, 3:688-689, 1969.

Table D-3. VALUES OF THE CONSTANTS USED TO ESTIMATE VERTICAL DISPERSION[a,52]

Usable range	Stability class	Coefficient		
		c_1	d_1	f_1
>1,000 m	A	0.00024	2.094	-9.6
	B	0.055	1.098	2.0
	C	0.113	0.911	0.0
	D	1.26	0.516	-13
	E	6.73	0.305	-34
	F	18.05	0.18	-48.6
		c_2	d_2	f_2
100-1,000 m	A	0.0015	1.941	9.27
	B	0.028	1.149	3.3
	C	0.113	0.911	0.0
	D	0.222	0.725	-1.7
	E	0.211	0.678	-1.3
	F	0.086	0.74	-0.35
		c_3	d_3	f_3
<100 m	A	0.192	0.936	0
	B	0.156	0.922	0
	C	0.116	0.905	0
	D	0.079	0.881	0
	E	0.063	0.871	0
	F	0.053	0.814	0

[a]For Equation D-3: $\sigma_z = cx^d + f$

Taking the first derivative of Equation D-6 yields

$$\frac{d\chi}{dx} = A_R \left\{ x^{-b-d} \left(\exp\left[B_R x^{-2d}\right]\right) \left(-2dB_R x^{-2d-1}\right) + \exp\left[B_R x^{-2d}\right] \left(-b-d\right) x^{-b-d-1} \right\} \qquad \text{(D-7)}$$

and setting this equal to zero (to determine the roots which give the minimum and maximum conditions of χ with respect to x) yields:

$$\frac{d\chi}{dx} = 0 = A_R x^{-b-d-1} \left(\exp\left[B_R x^{-2d}\right]\right) \left(-2dB_R x^{-2d} -b-d\right) \qquad \text{(D-8)}$$

Since we define that $x \neq 0$ or ∞ at χ_{max}, the following expression must be equal to 0:

$$-2dB_R x^{-2d} -d-b = 0 \qquad \text{(D-9)}$$

Therefore

$$(b+d)x^{2d} = -2dB_R \qquad \text{(D-10)}$$

or

$$x^{2d} = \frac{-2dB_R}{b+d} = \frac{2d\ H^2}{2c^2(b+d)} = \frac{d\ H^2}{c^2(b+d)} \qquad \text{(D-11)}$$

Hence

$$x = \left(\frac{d\ H^2}{c^2(b+d)}\right)^{\frac{1}{2d}} \text{ at } \chi_{max} \qquad \text{(D-12)}$$

Thus Equations D-2 and D-3 (at f = 0) become:

$$\sigma_y = a\left(\frac{d\ H^2}{c^2(d+b)}\right)^{\frac{b}{2d}} \qquad \text{(D-13)}$$

$$\sigma_z = c\left(\frac{d\ H^2}{c^2(b+d)}\right)^{\frac{d}{2d}} = \left(\frac{d\ H^2}{b+d}\right)^{\frac{1}{2}} \qquad \text{(D-14)}$$

The maximum will be determined for U.S. average conditions of stability. According to Gifford,[54] this is when $\sigma_y = \sigma_z$. Since b = 0.9031, and upon inspection of Table D-2 under U.S. average conditions, $\sigma_y = \sigma_z$, it can be seen that $0.881 \leq d \leq 0.905$ (class C stability[a]). Thus, it can be assumed that b is nearly equal to d in Equations D-13 and D-14 or:

$$\sigma_z = \frac{H}{\sqrt{2}} \tag{D-15}$$

and

$$\sigma_y = \frac{a}{c}\frac{H}{\sqrt{2}} \tag{D-16}$$

Under U.S. average conditions, $\sigma_y = \sigma_z$ and $a \approx c$ if $b \approx d$ and f = 0 (between class C and D, but closer to belonging in class C).

Then

$$\sigma_y = \frac{H}{\sqrt{2}} \tag{D-17}$$

Substituting for σ_y from Equation D-17 and for σ_z from Equation D-15 into Equation D-1 and letting y = 0:

$$\chi_{max} = \frac{2\ Q}{\pi u H^2} \exp\left[-\frac{1}{2}\left(\frac{H\sqrt{2}}{H}\right)^2\right] \tag{D-18}$$

or

$$\chi_{max} = \frac{2\ Q}{\pi e u H^2} \tag{D-19}$$

---

[a]The values given in Table D-3 are mean values for stability class. Class C stability describes these coefficients and exponents, only within about a factor of two.

- - - - - - - - - -

[54]Gifford, F. A., Jr. An Outline of Theories of Diffusion in the Lower Layers of the Atmosphere. In: Meteorology and Atomic Energy 1968, Chapter 3. Slade, D. A. (ed.). U.S. Atomic Energy Commission Technical Information Center. Oak Ridge. Publication No. TID-24190. July 1968. p. 113.

3. DEVELOPMENT OF SOURCE SEVERITY EQUATIONS

Source severity, S, has been defined as:

$$S = \frac{\bar{\chi}_{max}}{AAQS} \qquad \text{(D-20)}$$

where $\bar{\chi}_{max}$ = average maximum ground level concentration

AAQS = ambient air quality standard

Values of $\bar{\chi}_{max}$ are found from the following equation:

$$\bar{\chi}_{max} = \chi_{max} \left(\frac{t_0}{t}\right)^{0.17} \qquad \text{(D-21)}$$

where t_0 is the "instantaneous" (i.e., 3-minute) averaging time and t is the averaging time used for the ambient air quality standard as shown in Table D-4.

a. CO Severity

The primary standard for CO is reported for a 1-hr averaging time. Therefore, t = 60 minutes. Hence, from Equation D-21:

$$\bar{\chi}_{max} = \chi_{max}\left(\frac{3}{60}\right)^{0.17} \qquad \text{(D-22)}$$

Substituting for χ_{max} from Equation D-19 yields:

$$\bar{\chi}_{max} = \frac{2\ Q}{\pi e u H^2}\left(\frac{3}{60}\right)^{0.17} \qquad \text{(D-23)}$$

$$= \frac{2\ Q}{(3.14)(2.72)(4.5)H^2}\ (0.6) \qquad \text{(D-24)}$$

$$= \frac{0.052\ Q}{H^2}\ (0.6)$$

Table D-4. SUMMARY OF NATIONAL AMBIENT AIR QUALITY STANDARDS[55]

Pollutant	Averaging time	Primary standards	Secondary standards
Particulate matter	Annual (geometric mean)	75 μg/m³	60[a] μg/m³
	24 hr[b]	260 μg/m³	150 μg/m³
Sulfur oxides	Annual (arithmetic mean)	80 μg/m³ (0.03 ppm)	60 μg/m³ (0.02 ppm)
	24 hr[b]	365 μg/m³ (0.14 ppm)	260[c] μg/m³ (0.1 ppm)
	3 hr[b]	none	1,300 μg/m³ (0.5 ppm)
Carbon monoxide	8 hr[b]	10,000 μg/m³ (9 ppm)	none
	1 hr[b]	40,000 μg/m³ (35 ppm)	(Same as primary)
Nitrogen dioxide	Annual (arithmetic mean)	100 μg/m³ (0.05 ppm)	(Same as primary)
Photochemical oxidants	1 hr[b]	160 μg/m³ (0.08 ppm)	(Same as primary)
Hydrocarbons (nonmethane)	3 hr (6 to 9 a.m.)	160 μg/m³ (0.24 ppm)	(Same as primary)

[a]The secondary annual standard (60 μg/m³) is a guide for assessing implementation plans to achieve the 24-hr secondary standard.

[b]Not to be exceeded more than once per year.

[c]The secondary annual standard (260 μg/m³) is a guide for assessing implementation plans to achieve the annual standard.

- - - - - - - - - -

[55]Code of Federal Regulations, Title 42 - Public Health, Chapter IV - Environmental Protection Agency, Part 410 - National Primary and Secondary Ambient Air Quality Standards, April 28, 1971. 16 p.

or $$\bar{\chi}_{max} = \frac{3.12 \times 10^{-2}\ Q}{H^2} \qquad \text{(D-25)}$$

Substituting the primary standard for CO (0.04 g/m^3) and the value for $\bar{\chi}_{max}$ from Equation D-25 into the equation for S (Equation D-20) then gives:

$$S = \frac{\bar{\chi}_{max}}{AAQS} = \frac{3.12 \times 10^{-2}\ Q}{0.04\ H^2} \qquad \text{(D-26)}$$

or $$S_{CO} = \frac{0.78\ Q}{H^2} \qquad \text{(D-27)}$$

b. Hydrocarbon Severity

The primary standard for hydrocarbon is reported for a 3-hr averaging time. Therefore, t = 180 minutes. Hence, from Equation D-21:

$$\bar{\chi}_{max} = \chi_{max} \left(\frac{3}{180}\right)^{0.17} = 0.5\chi_{max} \qquad \text{(D-28)}$$

Substituting for χ_{max} from Equation D-19 yields:

$$\bar{\chi}_{max} = \frac{(0.5)(0.052)\ Q}{H^2} = \frac{0.026\ Q}{H^2} \qquad \text{(D-29)}$$

For hydrocarbons, AAQS = 1.6 x 10^{-4} g/m^3. Therefore

$$S = \frac{\bar{\chi}_{max}}{AAQS} = \frac{0.026\ Q}{1.6 \times 10^{-4}\ H^2} \qquad \text{(D-30)}$$

or $$S_{HC} = \frac{162.5\ Q}{H^2} \qquad \text{(D-31)}$$

c. Particulate Severity

The primary standard for particulate is reported for a 24-hr averaging time. Therefore, t = 1,440 minutes. Hence, for Equation D-21:

$$\bar{\chi}_{max} = \chi_{max} \left(\frac{3}{1,440}\right)^{0.17} \qquad \text{(D-32)}$$

Substituting for χ_{max} from Equation D-19 yields:

$$\bar{\chi}_{max} = \frac{0.052\ Q}{H^2}\ (0.35) = \frac{0.0182\ Q}{H^2} \qquad \text{(D-33)}$$

For particulates, AAQS = 2.6×10^{-4} g/m^3. Therefore

$$S = \frac{\bar{\chi}_{max}}{AAQS} = \frac{0.0182\ Q}{2.6 \times 10^{-4}\ H^2} \qquad \text{(D-34)}$$

or

$$S_P = \frac{70\ Q}{H^2} \qquad \text{(D-35)}$$

d. SO_x Severity

The primary standard for SO_x is reported for a 24-hr averaging time. Therefore, t = 1,440 minutes. Hence, proceeding as before:

$$\bar{\chi}_{max} = \frac{0.0182\ Q}{H^2} \qquad \text{(D-36)}$$

For SO_x, AAQS = 3.65×10^{-4} g/m^3. Therefore

$$S = \frac{\bar{\chi}_{max}}{AAQS} = \frac{0.0182\ Q}{3.65 \times 10^{-4}\ H^2} \qquad \text{(D-37)}$$

or

$$S_{SO_x} = \frac{50\ Q}{H^2} \qquad \text{(D-38)}$$

e. NO_x Severity

Since NO_x has a primary standard with a 1-yr averaging time, the χ_{max} correction equation (Equation D-21) cannot be used. Alternatively, the following equation is used:

$$\bar{\chi} = \frac{2.03\ Q}{\sigma_z ux} \exp\left[-\frac{1}{2}\left(\frac{H}{\sigma_z}\right)^2\right] \qquad \text{(D-39)}$$

A difficulty arises, however, because a distance x, from emission point to receptor, is included in Equation D-39. Hence, the following rationale is used: Equation D-19 is valid for neutral conditions or when $\sigma_z \simeq \sigma_y$. This maximum occurs when

$$H \simeq \sqrt{2}\sigma_z$$

and since, under these conditions,

$$\sigma_z = ax^b$$

then the distance x_{max} where the maximum concentration occurs is:

$$x_{max} = \left(\frac{H}{\sqrt{2}a}\right)^{\frac{1}{b}} \qquad \text{(D-40)}$$

For class C conditions, a = 0.113 and b = 0.911. Substituting these values into Equation D-40 yields:

$$x_{max} = \frac{H^{1.098}}{0.16} = 7.5\ H^{1.098} \qquad \text{(D-41)}$$

Since $\sigma_z = 0.113\ x_{max}^{0.911}$

and $u = 4.5$ m/s

and letting $x = x_{max}$, Equation D-39 becomes:

$$\bar{\chi}_{max} = \frac{4\ Q}{x_{max}^{1.911}} \exp\left[-\frac{1}{2}\left(\frac{H}{\sigma_z}\right)^2\right] \qquad \text{(D-42)}$$

In Equation D-42, the factor:

$$\frac{4\ Q}{x_{max}^{1.911}} = \frac{4\ Q}{(7.5\ H^{1.098})^{1.911}}$$

Therefore,

$$\bar{\chi}_{max} = \frac{0.085\ Q}{H^{2.1}} \exp\left[-\frac{1}{2}\left(\frac{H}{\sigma_z}\right)^2\right] \qquad \text{(D-43)}$$

As noted above, $\sigma_z = 0.113\ x^{0.911}$

Substituting for x from Equation D-41 into the above equation yields:

$$\sigma_z = 0.113\ (7.5\ H^{1.1})^{0.911} = 0.71\ H \qquad \text{(D-44)}$$

Substituting for σ_z from Equation D-44 into Equation D-42 yields:

$$\bar{\chi}_{max} = \frac{0.085\ Q}{H^{2.1}} \exp\left[-\frac{1}{2}\left(\frac{H}{0.71\ H}\right)^2\right] \qquad \text{(D-45)}$$

$$= \frac{0.085\ Q}{H^{2.1}}\ (0.371) = \frac{3.15 \times 10^{-2}\ Q}{H^{2.1}} \qquad \text{(D-46)}$$

Since the NO_x standard is 1.0×10^{-4} g/m^3, the NO_x severity equation is:

$$S_{NO_x} = \frac{\bar{\chi}_{max}}{AAQS} = \frac{3.15 \times 10^{-2}\ Q}{1 \times 10^{-4}\ H^{2.1}} \qquad \text{(D-47)}$$

or

$$S_{NO_x} = \frac{315\ Q}{H^{2.1}} \qquad \text{(D-48)}$$

4. AFFECTED POPULATION CALCULATION

Another form of the plume dispersion equation is needed to calculate the affected population since the population is assumed to be distributed uniformly around the source. If the wind directions are taken to 16 points and it is assumed that the wind directions within each sector are distributed randomly over a period of a month or a season, it can be assumed that the effluent is uniformly distributed in the horizontal within the sector. The appropriate equation for average concentration, $\bar{\chi}$, in g/m^3 is then:[51]

$$\bar{\chi} = \frac{2.03\ Q}{\sigma_z ux} \exp\left[-\frac{1}{2}\left(\frac{H}{\sigma_z}\right)^2\right] \qquad \text{(D-49)}$$

To find the distances at which $\bar{\chi}$/AAQS = 1.0, roots are determined for the following equation:

$$\frac{2.03\ Q}{(AAQS)\ \sigma_z ux} \exp\left[-\frac{1}{2}\left(\frac{H}{\sigma_z}\right)^2\right] = 1.0 \qquad \text{(D-50)}$$

keeping in mind that:

$$\sigma_z = ax^b + c$$

where a, b, and c are functions of atmospheric stability and are assumed to be selected for stability Class C. Since Equation D-50 is a transcendental equation, the roots are found by an iterative technique using the computer.

For a specified emission from a typical source, $\bar{\chi}$/AAQS as a function of distance might look as follows:

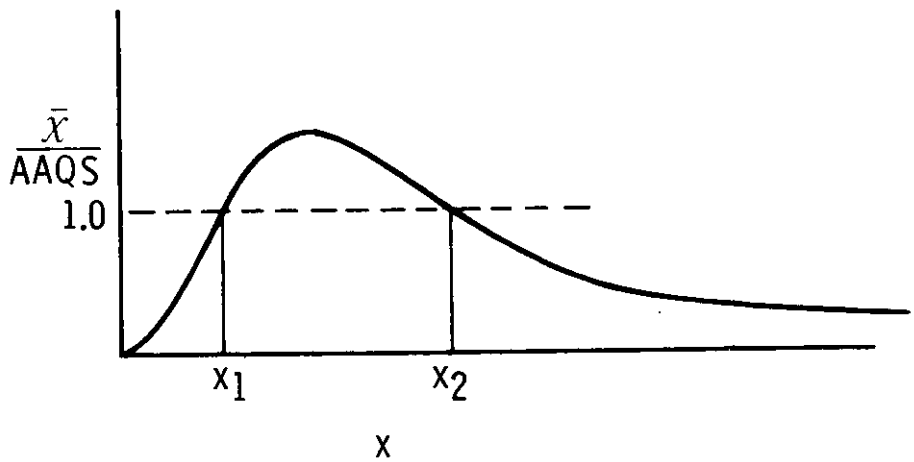

DISTANCE FROM SOURCE

The affected population is contained in the area

$$A = \pi(x_2{}^2 - x_1{}^2) \qquad \text{(D-51)}$$

If the affected population density is D_P, the total affected population, P, is

$$P = D_P A \text{ (persons)} \qquad \text{(D-52)}$$

APPENDIX E. DATA USED TO CALCULATE AFFECTED POPULATION

ASPHALT PAVING - HOT MIX PLANT

EMISSION TYPE IS PARTICULATE WIND SPEED = 0.45000E+01

Q = 0.60900E+01 F = 0.26000E-03 H = 0.10300E+02 POP. DEN. = 0.39750E+03
FOR SEVERITY GREATER THAN OR EQUAL TO 1.00
XMAX = 94.329 MAX. SEVERITY = 5.519

CONVERGED AT STEP 7

CONVERGED AT STEP 39

ROOT ONE = 0.04396 ROOT TWO = 0.38245

AFFECTED AREA = 0.45345 AFFECTED POPULATION = 180.24608

ASPHALT PAVING - HOT MIX PLANT

EMISSION TYPE IS NOX WIND SPEED = 0.45000E+01

Q = 0.78000E+00 F = 0.10000E-03 H = 0.10300E+02 POP. DEN. = 0.39750E+03
FOR SEVERITY GREATER THAN OR EQUAL TO 1.00
XMAX = 94.329 MAX. SEVERITY = 1.838

CONVERGED AT STEP 6

CONVERGED AT STEP 9

ROOT ONE = 0.05712 ROOT TWO = 0.19364

AFFECTED AREA = 0.10755 AFFECTED POPULATION = 42.75158

APPENDIX F. CALCULATION OF EMISSION FACTORS BASED ON MRC SAMPLING DATA

1. CARBON MONOXIDE EMISSIONS

a. Concentration of carbon monoxide in stack gas = 32.2 ppm ± 17.6% by volume

b. Gas flow rate through stack = 32,350 ft^3/min

c. Density of carbon monoxide[18] = 0.0781 lb/ft^3

d. Production rate during sampling = 130 tons/hr

e. 10^6 ft^3 of stack gas contain 32.2 ft^3 of CO
∴32,350 ft^3 of stack gas contain $32.2/10^6$ x 32,350 ft^3 CO = 1.04 ft^3 CO

f. 1 ft^3 CO weighs 0.0781 lb
∴1.04 ft^3 CO weighs 0.0781 lb/ft^3 x 1.04 ft^3 = 0.081 lb

g. In 1 minute, the CO flowing through the stack is 0.081 lb
∴In 60 minutes, the CO flowing through the stack is 4.87 lb

h. 130 tons of asphalt produced per hr emit 4.807 lb CO
∴1 ton of asphalt produced per hr emits 0.0375 lb CO
∴Emission factor is 0.0375 lb CO/ton or 0.0188 kg CO 19 g/MT per metric ton asphalt produced

2. NITROGEN DIOXIDE EMISSIONS

a. Concentration of nitrogen dioxide detected in stack gas is <29 ppm by volume

b. Gas flow rate through stack = 27,487 ft^3/min

c. Density of nitrogen dioxide[18] = 0.1287 lb/ft^3

d. Production rate during sampling = 176.4 tons/hr

e. 10^6 ft^3 of stack gas contain 29 ft^3 of NO_x
$\therefore$ 27,487 ft^3 of stack gas contain $29/10^6 \times 27{,}487$ ft^3 NO_x
= 0.80 ft^3 NO_x

f. 1 ft^3 NO_x weighs 0.1287 lb
$\therefore$ 0.80 ft^3 NO_x weighs 0.1287 lb/ft^3 x 0.80 ft^3 = 0.10 lb

g. In 1 minute, 0.10 lb NO_x flows through the stack
$\therefore$ In 60 minutes, 6.16 lb NO_x flow through the stack

h. 176.4 tons of asphalt produced per hr emit 6.16 lb NO_x
$\therefore$ 1 ton of asphalt produced emits 0.035 lb NO_x
$\therefore$ Emission factor is 0.035 lb NO_x/ton or 0.0176 kg NO_x 18 g/MT
per metric ton asphalt produced

3. SULFUR OXIDE EMISSIONS

a. 40% of the asphalt industry uses #2 fuel oil[16]

b. Average sulfur contents of #2 fuel oil = 0.22%[18]

c. An average of 2 gallons of #2 fuel oil is consumed to dry and heat aggregate for one ton of hot mix[45]

d. Density of #2 fuel oil = 7.31 lb/gal[18]

e. $$\underset{(32)}{S} + \underset{(32)}{O_2} \longrightarrow \underset{(64)}{SO_2}$$
$\therefore$ lb of fuel oil consumed to dry 1 ton hot mix
= 2 x 7.31 = 14.62 lb

f. 100 lb of fuel oil contain 0.22 lb sulfur
∴14.62 lb of fuel oil contain 0.032 lb sulfur

g. 32 lb sulfur burn to form 64 lb SO_2
∴0.032 lb sulfur burns to form 64/32 x 0.032 lb SO_2
= 0.064 lb SO_2
∴Emission factor is 0.064 lb SO_2/ton or 0.032 kg SO_2 per metric ton asphalt produced 32 g/MT

4. HYDROCARBON EMISSIONS

a. Concentration of hydrocarbon (HC) in stack gas = 42.3 ppm

b. Gas flow rate through the stack = 32,350 ± 5,133 ft^3/min

c. Density of hydrocarbons emitted[18] ≃ 0.0448 lb/ft^3

d. Production rate during sampling = 130 tons/hr

e. 10^6 ft^3 of stack gas contain 42.3 ft^3 HC
∴32,350 ft^3 of stack gas contain 42.3/10^6 x 32,350 ft^3 HC
= 1.37 ft^3 HC

f. 1 ft^3 of HC weighs 0.0448 lb
∴1.37 ft^3 HC weigh 0.0448 lb/ft^3 x 1.37 ft^3 = 0.061 lb

g. In 1 minute, 0.061 lb HC flows through the stack
∴In 60 minutes, 3.68 lb HC flow through the stack

h. 130 tons of asphalt produced per hr emit 3.68 lb HC
∴1 ton of asphalt produced emits 0.028 lb HC
∴Emission factor is 0.028 lb HC/ton or 0.014 kg HC per metric ton asphalt produced 14 g/MT

5. ALDEHYDES

a. Concentration of aldehydes in stack gas = 14.8 ppm ± 33%

b. Gas flow rate through stack = 32,350 ft^3/min

c. Density of acetaldehyde[18] = 0.1235 lb/ft^3

d. Production rate during sampling = 130 tons/hr

e. 10^6 ft^3 of stack gas contain 14.8 ft^3 aldehydes
∴ 32,350 ft^3 stack gas contain $14.8/10^6 \times 32{,}350$ ft^3 aldehydes = 0.48 ft^3 aldehydes

f. 1 ft^3 aldehyde weighs 0.1235 lb
∴ 0.48 ft^3 aldehyde weighs 0.059 lb

g. In 1 minute, 0.059 lb aldehyde flows through the stack
∴ In 60 minutes, 3.55 lb aldehyde flow through the stack

h. 176.4 tons of asphalt produced per hr emit 3.55 lb aldehyde
∴ 1 ton of asphalt produced emits 0.020 lb aldehydes
∴ Emission factor is 0.020 lb aldehydes/ton or 0.0101 kg aldehydes/metric ton asphalt produced 10 g/MT

6. EMISSIONS FROM THE MIXER

To calculate emission factors for materials emitted from the mixer, it is essential to determine the volume of gas leaving the mixer every time hot mix is dumped. No data are available, but we can safely assume that gases leaving the mixer will be less than the gases leaving the stack. By using the gas flow rate through the stack and the concentrations determined by The Asphalt Institute, we can calculate maximum emission rates of materials.

We learned from field sampling that the average dumping time is 8 seconds.

Stack flow rate per minute <916 dscm/min
∴ Mixer flow rate <916/60 x 8 dscm/min
∴ Mixer flow rate is <∿120 dscm/min

APPENDIX G. ASPHALT HOT MIX DRYER DRUM INDUSTRY

Sixteen dryer drum asphalt hot mix plants responded to an asphalt industry survey. Table G-1 is a summary of Questions Numbers 1 through 28 on the survey form for dryer drum asphalt hot mix plants.

Table G-2 shows the production rate, hours of operation, and types of control equipment used by the reporting companies. These data were used to calculate emission rate in pounds per ton. The emission rate was calculated in three groups of conditions:

a. Using no control equipment
b. Using only the primary collector
c. Using both primary and secondary collectors

Table G-3 lists the type of control equipment, its efficiency, and the emission factor when such equipment is used. Table G-4 lists the above mentioned three groups of emission rates and reported stack heights. These data were used to calculate the source severity for the operating plants for group a, b, and c conditions.

The average particulate emission rate for dryer drum asphalt plants has been calculated to be 0 to 12 pounds per hour. The average hours of operation for dryer drum plants is 907 ± 330 hours per year. Dryer drum plants represent 2.6% of the asphalt industry. There were an estimated 4,300 asphalt plants in operation in the United States in 1975.

Table G-1. SUMMARY OF DRYER DRUM ASPHALT HOT MIX INDUSTRY SURVEY DATA

Question No.	Information requested	Dryer drum process	
		Permanent	Mobile
1	Use by process type	2.6%	
2	Plant mobility	1.3%	1.3%
3	Shut down operations for the Winter	50.0%	75.0%
4	Percent of plants automated	100%	100%
5	Average capacity of mixer, metric tons (tons)	3.0 ± 1.30 (3.33 ± 1.43)	7.3 (8)
6a	Average production rate, metric tons/hr (tons/hr)	240 ± 102 (264 ± 112.4)	190 ± 85.6 (296 ± 94.4)
6b	Average production rate, 10^3 metric tons/yr (10^3 tons/yr)	200 ± 120 (222 ± 132.3	130 ± 77 (145 ± 84.9)
7	Number of months the plant operates per year	8.6 ± 2.1	7.4 ± 2.0
8	Average stack height,m (ft)	11.3 ± 4.5 (37.1 ± 14.6)	6.1 ± 1.4 (20.1 ± 4.7)
9	Aggregate composition		
	Gravel	29%	50%
	Sand	29%	25%
	Stone	-	13%
	Limestone	42%	13%
	Slag	-	-
	Other	-	-
10	Grades of asphalt used		
	AC-3	-	-
	AC-5	-	-
	AC-6	-	-
	AC-8	-	-
	AC-10	25%	11%
	AC-20	38%	11%
	AC-40	-	-
	AC-120	-	-
	AC-250	-	-
	AC-2000	-	-
	60-70	13%	-
	70-85	-	-
	85-100	25%	22%
	120-150	-	11%
	Others	-	44%
11	Type of fuel used		
	Gas	71%	0%
	Oil	29%	100%
12	Grades of fuel oil used		
	No. 2 oil	67%	29%
	No. 3 oil	-	-
	No. 4 oil	-	14%
	No. 5 oil	33%	14%
	No. 6 oil	-	14%
	Other	-	29%
13	Type of release agent used		
	Kerosene	-	14%
	Fuel Oil	75%	43%
	Chemical	25%	29%
	None	-	14%

Table G-1 (continued). SUMMARY OF DRYER DRUM ASPHALT HOT MIX INDUSTRY SURVEY DATA

Question No.	Information requested	Dryer drum process	
		Permanent	Mobile
14	Percent having storage facilities for hot mix	88%	75%
15	Average capacity of storage facility, Mg (tons)	220 ± 153 (246 ± 168.3)	96 ± 63 (106 ± 69.5)
16	Percent using a primary collector	63%	50%
17	Type of primary collector		
	Settling chamber	17%	40%
	Cyclone	50%	40%
	Multicyclone	17%	-
	Other	17%	20%
18	Percent using secondary collector	75%	75%
19	Type of secondary collector		
	Gravity spray tower	14%	-
	Cyclone scrubber	14%	60%
	Venturi scrubber	43%	40%
	Orifice scrubber	14%	-
	Baghouse	14%	-
	Other	-	-
20	Percent using tertiary collector	50%	0%
21	Percent using settling pond	63%	63%
22	Percent recycling water	57%	50%
23	Percent recycling fines collected from secondary collector	43%	29%
24	Percent covering hot mix with tarpaulin during haul	57%	43%
25	Percent controlling emissions from the asphalt storage tanks	0%	0%
26	Percent using recycled crankcase oil as fuel	13%	38%
-a			
28	Additional control devices		
	Paved/sprinkled yards	-	-
	Waste dust bins	-	-
	Fugitive fan (for dust)	-	-
	Blue smoke system	-	-
	Two stage multicyclone	-	-
	Bag collector	-	-
	Baghouse	-	-
	Wet fan	12.5%	-
	Wet wash (prewash)	12.5%	-
	Stockpile sprinklers	-	-
	Spray tubes	-	-
	Mist eliminator	-	-
	Spray tower	-	-
	Cyclone scrubber	-	-
	Double scrubber	-	12.5%
	Wet scrubber	-	-
	Venturi scrubber	-	-
	Dynamic precipitator	-	-
	Mixed gas incinerator	-	-

[a]Question No. 27 is not applicable.

Table G-2. DRYER DRUM ASPHALT PLANTS--CONTROL EQUIPMENT AND OPERATING CONDITIONS

Plant No.	Production rate, tons/yr	Hours of operation, hours/yr	Primary collector	Secondary collector	Emission rate uncontrolled, g/s (lb/hr)	Emission rate with only primary collector, g/s (lb/hr)	Emission rate using both primary and secondary collectors, g/s (lb/hr)
1	600,000	1200	Cyclone	Baghouse	12.5 (99.0)	0.5 (3.74)	1.0×10^{-4} (0.0008)
2	80,000	364	No primary	Cyclone scrubber	5.5 (43.56)	5.5 (43.56)	3.7×10^{-2} (0.293)
3	500,000	2857	No primary	Cyclone scrubber	4.4 (34.65)	4.4 (34.65)	2.9×10^{-2} (0.233)
4	200,000	667	Cyclone	No secondary	7.5 (59.40)	0.3 (2.24)	0.3 (2.24)
5	125,000	417	No primary	No secondary	7.5 (59.40)	7.5 (59.40)	7.5 (59.40)
6	333,000	667	Settling chamber	Venturi scrubber	12.5 (99.0)	4.2 (33.0)	3.7×10^{-3} (0.029)
7	185,000	667	Settling chamber	Cyclone scrubber	6.9 (54.45)	2.3 (18.15)	1.5×10^{-2} (0.122)
8	175,000	583	No primary	Venturi scrubber	7.5 (59.40)	7.5 (59.40)	6.7×10^{-3} (0.053)
9	200,000	1000	Cyclone	No secondary	5.0 (39.60)	0.2 (1.50)	0.2 (1.50)
10	100,000	400	No primary	Baghouse	6.2 (49.50)	6.2 (49.50)	1.4×10^{-3} (0.011)
11	250,000	625	Cyclone	No secondary	10.0 (79.20)	0.4 (2.99)	0.4 (2.99)
12	50,000	500	No primary	Baghouse	2.5 (19.80)	2.5 (19.80)	5.0×10^{-4} (0.004)
13	200,000	1333	Multicyclone	Venturi scrubber	3.7 (29.70)	0.025 (0.20)	2.5×10^{-5} (0.0002)
14	80,000	667	Cyclone	Gravity spray tower	3.0 (23.76)	0.1 (0.90)	1.0×10^{-3} (0.008)
15	500,000	1429	No primary	Venturi scrubber	10.0 (79.20)	10.0 (79.20)	7.8×10^{-2} (0.62)
16	400,000	1143	No primary	Venturi scrubber	8.7 (69.30)	8.7 (69.30)	7.8×10^{-2} (0.62)

Table G-3. EFFICIENCY OF DRYER DRUM POLLUTION CONTROL EQUIPMENT

Type of control	Efficiency %	Emission factors	
		g/kg	lb/ton
Uncontrolled	-	0.10	0.198
Settling chamber	66.7	0.033	0.066
Cyclone	96.2	3.78×10^{-3}	7.48×10^{-3}
Multicyclone	99.3	6.7×10^{-4}	1.33×10^{-3}
Gravity spray tower	99.1	8.89×10^{-4}	1.76×10^{-3}
Cyclone scrubber	99.3	6.7×10^{-4}	1.33×10^{-3}
Venturi or orifice scrubber	99.9	8.9×10^{-5}	1.76×10^{-4}
Baghouse	99.98	2.2×10^{-5}	4.36×10^{-5}

Therefore, the total number of dryer drum plants has been estimated to be 119. These data were used to calculate total mass particulate emissions from the dryer drum asphalt industry. The result is an emission rate of 230 tons per year, which corresponds to 0.001% of the total mass particulate in the United States.

Assuming use of no control equipment, use of only primary collectors, and use of reported primary and secondary control equipment, the total mass and percent contribution to particulate emissions from all stationary sources in the United States by dryer drum plants were summarized as shown in Table G-5.

Table G-4. SOURCE SEVERITY FOR PARTICULATE EMISSIONS FROM DRYER DRUM ASPHALT PLANTS

Plant No.	Emission rate uncontrolled (Q_1), g/s	Emission rate with only primary collector (Q_2), g/s	Emission rate using both primary and secondary collectors (Q), g/s	Stack height (H), m	Source severity for uncontrolled emissions, $S_1 = \frac{70Q}{H^2}_1$	Source severity using only primary collector, $S_2 = \frac{70Q}{H^2}_2$	Source severity using both primary and secondary collectors, $S = \frac{70Q}{H^2}$
1	12.49	0.472	0.0001	6.1	23.49	0.89	0.0002
2	5.49	5.49	0.037	7.6	6.66	6.66	0.448
3	4.37	4.37	0.029	8.7[a]	4.01	4.01	0.03
4	7.49	0.283	0.283	4.6	24.78	0.936	0.936
5	7.49	7.49	7.49	3.7	38.30	38.30	38.30
6	12.49	4.16	0.004	7.6	15.13	5.04	0.004
7	6.87	2.29	0.015	6.1	12.92	4.31	0.029
8	7.49	7.49	0.007	7.3	9.84	9.84	0.009
9	4.99	0.189	0.189	4.6	16.52	0.63	0.625
10	6.24	6.24	0.001	10.7	3.82	3.82	0.0008
11	9.99	0.377	0.377	15.2	3.03	0.114	0.114
12	2.50	2.50	0.0006	8.7[a]	2.29	2.29	0.0006
13	3.75	0.025	0.00002	12.2	1.76	0.012	0.00001
14	3.00	0.114	0.001	12.2	1.41	0.53	0.0005
15	9.99	9.99	0.008	18.3	2.09	2.09	0.002
16	8.74	8.74	0.008	6.1	16.44	16.44	0.015

[a]Average stack height

Table G-5. CONTRIBUTION TO NATIONAL EMISSIONS (1975)

No control equipment in operation		Only primary control equipment in operation		Reported primary and secondary control equipment in operation	
Total mass of particulate emissions, metric tons/year (tons/yr)	Percent contribution to national emissions	Total mass of particulate emissions, metric tons/year (tons/yr)	Percent contribution to national emissions	Total mass of particulate emissions, metric tons/year (tons/yr)	Percent contribution to national emissions
2720 (3000)	0.016	1450 (1600)	0.008	210 (230)	0.001

APPENDIX H. STATEMENT OF THE NATIONAL ASPHALT PAVEMENT ASSOCIATION ON SOURCE ASSESSMENT DOCUMENT FOR ASPHALT HOT MIX

The National Asphalt Pavement Association and its Environmental Control Committee are indebted to the Monsanto Research Corporation, and especially to Mr. T. W. Hughes and Mr. Z. S. Khan, for the opportunity to comment on this report. We especially thank the project leaders for consulting with us during the inception and preparation of this report in several meetings. We are pleased by the fact that the report reflects an understanding and the consideration of the special characteristics of the hot-mix industry. We also thank Dr. Denny, Mr. Baker and Mr. Turner who gave us the opportunity to provide assistance and data for this document.

The general description of the industry has been covered extremely well in general terms and in sufficient depth for the purpose of this report.

The evaluation of the Plant Survey shows that the asphalt hot-mix industry reduced emissions from a high of 525,000 tons in 1970 to 70,000 tons in 1975 (Fig. 14, page 62). This amounts to a reduction by a factor of over 7, while production increased during most of this time. This decrease is not a result of legislation and regulation alone, but to a major extent voluntary efforts in emission reduction by this industry.

The projection of the further development of particulate control is shown on best case and worst case basis (Fig. 14, page 62). The representatives of this industry feel that even further reduction can be achieved as the asphalt hot-mix industry upgrades its existing facilities even while expanding its production.

The raw survey data (Ref. Table C-2) less the three questionable emission rates (lb./hr.) were grouped into three categories.

Group 1 consisted of 52 plants with emission rates from 102 lb./hr. to 510 lb./hr. The majority of plants in this group had either uncontrolled emissions or cyclones as control devices. It is felt that these plants are probably pre-EPA and should be considered for early retirement.

Group 2 consisted of 87 plants with emission rates from 20 lb./hr. to 101.99 lb./hr. By looking at the type of control devices, the hours of operation and the tonnage per year, it was felt that this group represented the average emission group for pre-EPA plants.

Group 3 consisted of 259 plants with emission rates from .52 lb./hr. to 19.99 lb./hr. The majority of plants in this group have a baghouse or a venturi scrubber as a control device. Based on tonnage and hours operated, the remainder of this group exhibited low emissions. It was felt that this group represented the plants sold after EPA guidelines were issued.

New mean emission rates and hours of operation were calculated for each group:

	MEAN EMISSION LB/HR	MEAN HOURS OPERATION
GROUP 1	252.2	663
GROUP 2	46.6	641
GROUP 3	4.1	670

It was assumed that the plant industry would experience a new sales growth rate of 4½%. Of that 4½%, 3% would be real fleet growth, while 1½% would be replacement plant sales. Both types of sales would be of plants that meet EPA standards thus decreasing the population of Group 1 and increasing the population of Group 3. Group 2's population would probably experience upgrading and modernization which would decrease the emission rate but the population would remain stable. We did not attempt to account for this emission decrease.

By applying the above growth assumptions to the 1975 estimate of plants, we see the following totals for 1978:

3989 @ 4½% New Sales Growth = 4552
3989 @ 3% New Sales Growth = 4359

Decrease in Group 1 193

We can then proportion the survey population to Monsanto's 1975 asphalt plant population, apply the growth rates and run through the equation to arrive at estimated 1978 emissions. It was assumed that emission rates and hours of operation would remain the same as 1975.

	SURVEY POP.	1975 ASPH. PLANTS	1978 ASPH. PLANTS	X	EMISSION RATE LB/HR	X	HRS. OPER.	=	TONS OF EMISSIONS
GROUP 1	52	521	328		252.2		663		27,422
GROUP 2	87	872	872		46.6		641		13,024
GROUP 3	259	2,596	3,159		4.1		670		44,785

This results in 44,785 tons or 40,640 metric tons of emissions as compared to Monsanto's worst case analysis of 73,000 metric tons. This is a 44% decrease.

In addition to the above, the industry's trend toward the utilization of drum mixers will further reduce emissions (Table G-2, page 159, Table 9, page 46). At this time, the estimated percentages in regard to new plant sales favors the drum mixer process by as much as 85%, compared to 15% of the sale of the more

conventional hot-mix batch plant. Substantial efforts are underway at this time to make possible the utilization of baghouses on drum mixers.

Great caution should be exercised in using the emission rates contained in Table 23 (page 6) since these values are based on emissions from a "typical plant" (Table 15, page 53). For instance: In Maryland, the State enforces an emission rate of 0.03 gr./scfd (70 mg. per m^3) under the State Implementation Plan or approximately maximum 11 lbs. per hour for representative plant, while the report uses 48 lbs./hr. for the calculation for statewide hot-mix emissions.

A most recent survey of hot-mix asphalt plants commissioned by EPA shows that over 4,500 plants share in the production of the 310,000,000 tons of asphalt pavement mixtures so that the average facility will produce 68,900 tons of mix per year. This would result in 460 hrs. per year of production at a rate of 150 tons/hr. The average operating times of hot-mix asphalt plants in this report are averaged at 666 hr./yr. Recently EPA's operating times for such facilities have been claimed to average at 4,200 hr./yr. which is quite doubtful in the light of NAPA and Monsanto findings.

Although one might find the particulate emission factors valid within the scope of this report and on the basis of the returns from the questionnaire, the TLV's proposed in this report do not reflect reasonable judgment. At this time, there are two TLV's in existence for application in this document:

1. TLV for asphalt fumes which is 5 mgr/m^3,
2. TLV for coal tar pitch volatiles (Benzene, soluble fraction of 0.2 mgr/m^3.

The results from the tests of asphalt fume emissions from asphalt hot-mix plants prove that the chemical constituents of coal tar pitch volatiles are entirely different and much more hazardous than those of asphalt fumes. Therefore, the 5 mgr/m^3 asphalt fume TLV should apply which already contain a safety factor. In setting the source severity factors in this report, the 0.2 coal tar pitch TLV was applied.

In addition, the TLV for suspected carcinogens was reduced again to 1 microgram/m^3. In researching the background, such a TLV could not be found. The American Conference of Governmental and Industrial Hygienists, which is considered the sole source for developing and setting TLV's, trademarked this term. Therefore, the term "TLV" should not be used, since it can lead to the assumption that such a TLV was arrived at and supported through thorough testing by the ACGIH.

In essence, the safety factor for source severity has been calculated to be 5,000 times stricter than the initial TLV set by ACGIH.

The effect on humans has not been established since there are no valid data, such as precondition time of exposure and contributing factors. One single complaint on asphalt fumes in more than 11,000 man hours cannot be considered to be supportive of such a prohibitively stringent standard. One state reports 14 cases of dermatitis resulting from contact with asphalt; yet

three large roofing companies report no evidence of ill health attributable to asphalt, although roofers experience a much more close contact with asphalt than for instance asphalt pavers. As a matter of fact, "old timers" even today determine the quality of a paving asphalt by chewing it. Doctors Baylor and Weaver concluded that ... "petroleum asphalt cannot rationally be considered a hazardous substance."

The attached table serves to highlight these factors.

CONCLUSION:

The basis on which the source assessment document has been prepared is in its entirety a most valuable report and guide for the control of emissions from asphalt hot-mix plants.

The status of the particulate control is in general terms similar to the expectations of the industry. These emission factors will have to be updated from time to time to verify the predictions contained within this report.

Where we disagree with the source assessment document is the severity factor for polycyclic organic materials. There is neither a substantiation nor reasoning contained in this report which would explain a safety factor of 5,000 times more severe than that of the American Conference of Governmental Industrial Hygienists which has been globally recognized as the standard setting agency for such materials. The National Institute of Occupational Safety and Health is studying asphalt fumes presently and there is no indication that a proposed standard in excess of that of the ACGIH is contemplated.

We are aware of the fact that the general public is more susceptible to POM's than the American worker; however, it must be recognized that a safety factor of 5,000 is beyond any reasonable precaution to protect the health of the public.

We, therefore, propose that a safety factor of 100 as shown in Table 18-a be adopted.

We appreciate the opportunity to comment on this essentially fine document.

Milton F. Masters, Chairman of the NAPA Environmental Control Committee
James R. Tillman, Member of the NAPA Environmental Control Committee
W. Dean Cherry, Member of the NAPA Environmental Control Committee
W. Con Proctor, Member of the NAPA Environmental Control Committee
Paul R. Langston, Member of the NAPA Environmental Control Committee
Fred Kloiber, NAPA Director of Engineering & Operations

June 24, 1977
FK/pmd

TABLE 18-a (Based on Table 18, page 57)*

SOURCE SEVERITY OF POLYCYCLIC ORGANIC MATERIAL EMITTED FROM STACK

POM COMPONENT	EMISSION RATE MICROGRAMS/SECOND	SOURCE SEVERITY		
		USING TLV 0.2 mg/m^3 FOR TAR PITCH VOLATILES	USING TLV 5 mg/m^3 FOR ASPHALT FUMES	USING A SAFETY FACTOR OF 100 FOR GENERAL PUBLIC
Benzo (c) phenanthrene	7.1	0.0018	0.00007	0.007
7,12-Dimethylbenz (a) anthracene	7.1	0.0018	0.00007	0.007
**Benzo (a) pyrene/benzo (e) pyrene/ perylene	8.4	0.0022	0.00009	0.009
3-Methylcholanthrene	7.1	0.0018	0.00007	0.007
Dibenz (a,h) anthracene	7.1	0.0018	0.00007	0.007
Indeno (1,2,3-c,d) pyrene	7.1	0.0018	0.00007	0.007
7H-Dibenzo (c,g) carbazole	8.4	0.0022	0.00009	0.009
Dibenzo (a,h & a,i) pyrene	7.1	0.0018	0.00007	0.007

*Only the POM's suspected to be carcinogens are listed, with the exception of ** Benzo pyrene which is at this time not suspect.

GLOSSARY[8]

AGGREGATE - Any hard, inert, mineral material used for mixing in graduated fragments. It includes sand, gravel, crushed stone, and slag.

ASPHALT - A dark brown to black cementitious material in which the predominating constituents are bitumens which occur in nature or are obtained in petroleum processing.

ASPHALT BASE COURSE - A foundation course consisting of mineral aggregate, bound together with asphaltic material.

ASPHALT CEMENT - Asphalt that is refined to meet specifications for paving, industrial, and special purposes. Its penetration is usually between 40 and 300. The term is often abbreviated A.C.

ASPHALT CONCRETE - High quality, thoroughly controlled hot mixture of asphalt cement and well-graded, high quality aggregate, thoroughly compacted into a uniform dense mass.

ASPHALT PAVEMENTS - Pavements consisting of a surface course of mineral aggregate coated and cemented together with asphalt cement on supporting courses such as asphalt bases; crushed stone, slag, or gravel; or on portland cement concrete, brick, or block pavement.

ASPHALT SURFACE COURSE - The top course of an asphalt pavement, sometimes called asphalt wearing course.

BASE COURSE - The layer of material immediately beneath the surface or intermediate course. It may be composed of crushed stone, crushed slag, crushed or uncrushed gravel and sand, or combinations of these materials. It also may be bound with asphalt.

BITUMEN - A mixture of hydrocarbons of natural or pyrogenous origin, or a combination of both; frequently accompanied by nonmetallic derivatives which may be gaseous, liquid, semisolid, or solid; and which are completely soluble in carbon disulfide.

COARSE AGGREGATE - That retained on the No. 8 sieve.

COARSE-GRADED AGGREGATE - One having a continuous grading in sizes of particles from coarse through fine with a predominance of coarse sizes.

FINE AGGREGATE - That passing the No. 8 sieve.

FINE-GRADED AGGREGATE - One having a continuous grading in sizes of particles from coarse through fine with a predominance of fine sizes.

LIQUID ASPHALT - An asphaltic material having a soft or fluid consistency that is beyond the range of measurement by the normal penetration test, the limit of which is 300 maximum. Liquid asphalts include cutback asphalts and emulsified asphalts.

Cutback Asphalt - Asphalt cement which has been liquefied by blending with petroleum solvents (also called diluents), as for the RC and MC liquid asphalts (see a and b below). Upon exposure to atmospheric conditions the diluents evaporate, leaving the asphalt cement to perform its function.

a. Rapid-Curing (RC) Asphalt - Liquid asphalt composed of asphalt cement and a naphtha or gasoline-type diluent of high volatility.

b. Medium-Curing (MC) Asphalt - Liquid asphalt composed of asphalt cement and a kerosene-type diluent of medium volatility.

c. Slow-Curing (SC) Asphalt - Liquid asphalt composed of asphalt cement and oils of low volatility.

d. Road-Oil - A heavy petroleum oil, usually one of the Slow-Curing (SC) grades of liquid asphalt.

Emulsified Asphalt - An emulsion of asphalt cement and water which contains a small amount of an emulsifying agent, a heterogeneous system containing two normally immiscible phases (asphalt and water) in which the water forms the continuous phase of the emulsion, and minute globules of asphalt form the discontinuous phase. Emulsified asphalts may be of either the anionic, electro-negatively charged asphalt globules, or cationic, electro-positively charged asphalt globule types, depending upon the emulsifying agent. An emulsified asphalt in which the continuous phase is asphalt, usually an RC or MC liquid asphalt, and the discontinuous phase is minute globules of water in relatively small quantities is called an inverted emulsified asphalt. This type emulsion may also be either anionic or cationic.

MACADAM AGGREGATE - A coarse aggregate of uniform size usually of crushed stone, slag, or gravel.

MINERAL DUST - The portion of the fine aggregate passing the No. 200 sieve.

MINERAL FILLER - A finely divided mineral product at least 70 percent of which will pass a No. 200 sieve. Pulverized limestone is the most commonly manufactured filler, although other stone dust, hydrated lime, portland cement, and certain natural deposits of finely divided mineral matter are also used.

NATURAL (NATIVE) ASPHALT - Asphalt occurring in nature which has been derived from petroleum by natural processes of evaporation of volatile fractions leaving the asphalt fractions. The native asphalts of most importance are found in the Trinidad and Bermudez Lake deposits. Asphalt from these sources often is called Lake Asphalt.

OPEN-GRADED AGGREGATE - One containing little or no mineral filler or in which the void spaces in the compacted aggregate are relatively large.

PETROLEUM ASPHALT - Asphalt refined from crude petroleum.

SUBBASE - The course in the asphalt pavement structure immediately below the base course is called the subbase course. If the subgrade soil is of adequate quality it may serve as the subbase.

SUBGRADE - The soil prepared to support a structure or a pavement system. It is the foundation for the pavement structure. The subgrade soil sometimes is called "basement soil" or "foundation soil."

WELL-GRADED AGGREGATE - Aggregate that is graded from the maximum size down to filler with the object of obtaining an asphalt mix with a controlled void content and high stability.

REFERENCES

1. Laster, L. L. Atmospheric Emissions from the Asphalt Industry. U.S. Environmental Protection Agency, Office of Research and Development. Research Triangle Park. Report No. EPA-650/2-73-046 (PB 227 372). December 1973. 36 p.

2. Private correspondence. Fred Kloiber, National Asphalt Pavement Association, to Monsanto Research Corporation. October 7, 1975.

3. Hot Mix Asphalt - Plant and Production Facts, 1973-74. National Asphalt Pavement Association. Riverdale. Information Series 56. 31 p.

4. Air Pollution Engineering Manual, Second Edition. Danielson, J. A. (ed.). U.S. Environmental Protection Agency. Research Triangle Park. Publication No. AP-40. May 1973. 987 p.

5. Asphalt as a Material. The Asphalt Institute. College Park. Information Series No. 93 (IS-93). Revised June 1973. 16 p.

6. Jones, H. R. Pollution Control in the Petroleum Industry. Pollution Technology Review No. 4. Park Ridge, Noyes Data Corporation, 1973. 349 p.

7. Larson, T. D. Portland Cement and Asphalt Concretes. New York, McGraw-Hill Book Company, Inc., 1963. 282 p.

8. A Brief Introduction to Asphalt and Some of Its Uses, Seventh Edition. Manual Series No. 5 (MS-5). College Park, The Asphalt Institute, September 1974. 74 p.

9. Specifications for Paving and Industrial Asphalts, 1974-1975 Edition. Specification Series No. 2 (SS-2). College Park, The Asphalt Institute, issued September 1974. 50 p.

10. The Asphalt Handbook. Manual Series No. 4 (MS-4). College Park, The Asphalt Institute, March 1966. p. 129-134.

11. Crim, J. A., and W. D. Snowden. Asphaltic Concrete Plants Atmospheric Emissions Study. Valentine, Fisher & Tomlinson, EPA Contract 68-02-0076. Seattle. November 1971. 101 p.

12. Friedrich, H. E. Air Pollution Control Practices. Hot-Mix Asphalt Paving Batch Plants. Journal of the Air Pollution Control Association. 19:924-928, December 1969.

13. Patankar, U. Inspection Manual for Enforcement of New Performance Standards: Asphalt Concrete Plants. JACA Corp., EPA Contract 68-02-1356, Task 2. Fort Washington. June 1975. 79 p.

14. Background Information for Proposed New Source Performance Standards: Asphalt Concrete Plants, Petroleum Refineries, Storage Vessels, Secondary Lead Smelters and Refineries, Brass or Bronze Ingot Production Plants, Iron and Steel Plants, and Sewage Treatment Plants. Volume 1, Main Text. U.S. Environmental Protection Agency, Office of Air and Water Programs. Research Triangle Park. Report No. APTD-1352a (PB 221 736). June 1973. 61 p.

15. Private correspondence. James F. Denton, Warren Brothers Company, to Monsanto Research Corporation. May 7, 1975.

16. Asphalt Industry Survey. Monsanto Research Corporation. Dayton. Conducted through the National Asphalt Pavement Association. November 12, 1975. 24 p.

17. Primary and Secondary Collection Systems for Environmental Control (Proceedings from NAPA's 15th Annual Midyear Meeting, July 30 - August 1, 1971, and the 17th Annual Convention, January 4-14, 1972). National Asphalt Pavement Association. Riverdale. Information Series 38.

18. Chemical Engineers' Handbook, Fifth Edition. Perry, J. H., and C. H. Chilton (eds.). New York, McGraw-Hill Book Company, 1973.

19. Dickson, P. F. Heating and Drying of Aggregate. National Asphalt Pavement Association. Riverdale. May 1971. 50 p.

20. The Operation of Exhaust Systems in the Hot Mix Plant - Efficiency and Emission Control. National Asphalt Pavement Association. Riverdale. Information Series 52. 1975. 51 p.

21. Background Information for Establishment of National Standards of Performance for New Sources. Asphalt Batch Plants. Environmental Engineering, Inc. Gainesville. EPA Contract CPA 70-142, Task Order No. 2. 15 March 1971.

22. Terrel, R. L., et al. Asphalt Paving Mixtures Produced by the Dryer-Drum Process. Prepared for Federal Highway Administration, Olympia, by University of Washington, Seattle, and Federal Highway Administration, Vancouver. Final Report (PB 212 854). August 1972. 134 p.

23. Schreter, R. E. Carbon Monoxide (CO) Formation in Aggregate Dryers. Hauck Manufacturing Company. July 21, 1973. 13 p.

24. Environmental Pollution Control at Hot Mix Asphalt Plants. National Asphalt Pavement Association. Riverdale. Information Series 27. 23 p.

25. Asphalt Hot-Mix Emission Study. The Asphalt Institute. College Park. Research Report 75-1 (RR-75-1). March 1975. 103 p.

26. Puzinauskas, V. P., and L. W. Corbett. Report on Emissions from Asphalt Hot Mixes. The Asphalt Institute. (Presented at the Division of Petroleum Chemistry, Inc. American Chemical Society meeting. Chicago. August 1975.) 20 p.

27. Chalekode, P. K., J. A. Peters, and T. R. Blackwood. Source Assessment: Crushed Granite. Monsanto Research Corporation, EPA Contract 68-02-1874. Dayton. Preliminary document submitted to the EPA, July 1975. 62 p.

28. Chalekode, P. K., and T. R. Blackwood. Source Assessment: Crushed Limestone. Monsanto Research Corporation, EPA Contract 68-02-1874. Dayton. Preliminary document submitted to the EPA, February 1976. 59 p.

29. Chalekode, P. K., and T. R. Blackwood. Source Assessment: Crushed Sandstone, Quartz, and Quartzite. Monsanto Research Corporation, EPA Contract 68-02-1874. Dayton. Preliminary document submitted to the EPA, August 1975. 59 p.

30. Blackwood, T. R., P. K. Chalekode, and R. A. Wachter. Source Assessment: Crushed Stone. Monsanto Research Corporation. Dayton. Report No. MRC-DA-536. Preliminary document submitted to the EPA, February 1976. 108 p.

31. Chalekode, P. K., and T. R. Blackwood. Source Assessment: Transport of Sand and Gravel. Monsanto Research Corporation, EPA Contract 68-02-1874. Dayton. Preliminary document submitted to the EPA, December 1974. 86 p.

32. Air Pollution Regulations Study. National Asphalt Pavement Association. Riverdale. Information Series 49. 1973.

33. New Source Performance Standards for New or Modified Asphalt Concrete Plants. Federal Register. 38:15407, June 11, 1973.

34. New Source Performance Standards for New or Modified Asphalt Concrete Plants. Federal Register. 39:9314, March 8, 1974.

35. Compilation of Air Pollutant Emission Factors. U.S. Environmental Protection Agency. Research Triangle Park. Publication No. AP-42. April 1973. p. 8.1-8.4.

36. Particulate Polycyclic Organic Matter - Biologic Effects of Atmospheric Pollutants. Washington, National Academy of Sciences, 1972. p. 6-12.

37. Private correspondence. Asphalt Paving Hot Mix Industry response to Environmental Protection Agency comment. 17 p.

38. Cavender, J. H., et al. Nationwide Air Pollutant Emission Trends 1940-1970. U.S. Environmental Protection Agency, Office of Air and Water Programs. Research Triangle Park. Publication No. AP-115. January 1973. 52 p.

39. Vandegrift, A. E., et al. Particulate Pollutant System Study. Volume III - Handbook of Emission Properties. Midwest Research Institute, EPA Contract CPA 22-69-104. Kansas City. May 1971. 607 p.

40. Control Techniques for Particulate Air Pollutants. U.S. Department of Health, Education, and Welfare. Washington. Publication No. AP-51 (PB 190 253). January 1969. 215 p.

41. Status Summary of Different Industries - Asphalt Plants. Journal of the Air Pollution Control Association. 24:1190-1191, December 1974.

42. Reigel, S. A., et al. Baghouses - What to Know Before You Buy. Pollution Engineering. May 1973. p. 32-34.

43. Abraham, H. Asphalts and Allied Substances, Fifth Edition. Volume I. New York, D. Van Nostrand Company, Inc., January 1945. 887 p.

44. Good Housekeeping - Your Responsibility. National Asphalt Pavement Association. Riverdale. Information Series 43. 24 p.

45. Foster, C. R., and F. Kloiber. Fuel Conservation. National Asphalt Pavement Association. Riverdale. 7 p.

46. Foster, C. R. The Future for Hot-Mix Asphalt Paving. National Asphalt Pavement Association. (Presented at the 1976 International Public Works Congress of the American Public Works Association. New Orleans. September 1975.) 4 p.

47. Hot Mix Asphalt - Plant and Production Facts, 1970. National Asphalt Pavement Association. Riverdale. Information Series 35. 24 p.

48. Hot Mix Asphalt - Plant and Production Facts, 1972. National Asphalt Pavement Association. Riverdale. Information Series 46. 32 p.

49. Background Information for New Source Performance Standards: Asphalt Concrete Plants, Petroleum Refineries, Storage Vessels, Secondary Lead Smelters and Refineries, Brass and Bronze Ingot Production Plants, Iron and Steel Plants and Sewage Treatment Plants. Volume 3, Promulgated Standards. U.S. Environmental Protection Agency. Research Triangle Park. Report No. EPA-450/2-74-003 (PB 231 601). February 1974. 150 p.

50. Comprehensive Study of Specified Air Pollution Sources to Assess the Economic Impact of Air Quality Standards, Volume I. U.S. Environmental Protection Agency. Research Triangle Park. Report No. FR 41U-649 (PB 222 857). August 1972. 377 p.

51. Turner, D. B. Workbook of Atmospheric Dispersion Estimates. U.S. Department of Health, Education, and Welfare. Cincinnati. Public Health Service Publication No. 999-AP-26. May 1970. 84 p.

52. Martin, D. O., and J. A. Tikvart. A General Atmospheric Diffusion Model for Estimating the Effects of Air Quality of One or More Sources. (Presented at 61st Annual Meeting of the Air Pollution Control Association. St. Paul. June 23-27, 1968.) 18 p.

53. Tadmor, J., and Y. Gur. Analytical Expressions for the Vertical and Lateral Dispersion Coefficients in Atmospheric Diffusion. Atmospheric Environment. 3:688-689, 1969.

54. Gifford, F. A., Jr. An Outline of Theories of Diffusion in the Lower Layers of the Atmosphere. In: Meteorology and Atomic Energy 1968, Chapter 3. Slade, D. A. (ed.). U.S. Atomic Energy Commission Technical Information Center. Oak Ridge. Publication No. TID-24190. July 1968. p. 113.

55. Code of Federal Regulations, Title 42 - Public Health, Chapter IV - Environmental Protection Agency, Part 410 - National Primary and Secondary Ambient Air Quality Standards, April 28, 1971. 16 p.

56. Metric Practice Guide. American Society for Testing and Materials. Philadelphia. ASTM Designation: E 380-74. November 1974. 34 p.

TECHNICAL REPORT DATA
(Please read Instructions on the reverse before completing)

1. REPORT NO. EPA-600/2-77-107n	2.	3. RECIPIENT'S ACCESSION NO.
4. TITLE AND SUBTITLE SOURCE ASSESSMENT: Asphalt Hot Mix		5. REPORT DATE December 1977 issuing date 6. PERFORMING ORGANIZATION CODE
7. AUTHOR(S) Z. S. Khan and T. W. Hughes		8. PERFORMING ORGANIZATION REPORT NO. MRC-DA-542
9. PERFORMING ORGANIZATION NAME AND ADDRESS Monsanto Research Corporation, 1515 Nicholas Road, Dayton, Ohio 45407		10. PROGRAM ELEMENT NO. 1AB604 11. CONTRACT/GRANT NO. 68-02-1874
12. SPONSORING AGENCY NAME AND ADDRESS Industrial Environmental Research Lab., Cincinnati, OH; Office of Research and Development; U.S. Environmental Protection Agency; Cincinnati, Ohio 45268		13. TYPE OF REPORT AND PERIOD COVERED Task Final 8/74-7/77 14. SPONSORING AGENCY CODE 600/12

15. SUPPLEMENTARY NOTES
IERL-Ci project leader for this report is Ronald J. Turner, 513-684-4481.

16. ABSTRACT

This report summarizes data on air emissions from the asphalt hot mix industry. A representative asphalt hot mix plant was defined, based on the results of an industrial survey, to assess the severity of emissions from this industry. Source severity was defined as the ratio of the maximum time-averaged ground level concentration of an emission to the primary ambient air quality standard for criteria pollutants or to a modified threshold limit value for noncriteria pollutants. For a representative plant, source severities for particulate, nitrogen oxides, sulfur oxides, hydrocarbons, and carbon monoxide are 4.02, 1.83, 0.67, 0.96, and 0.01, respectively. Source severities for POM's and aldehydes are 0.14 and 0.13, respectively. The report describes the manufacture of asphalt hot mix, emissions produced, sources of emissions, the growth and nature of the industry and the status of pollution control technology.

17. KEY WORDS AND DOCUMENT ANALYSIS

a. DESCRIPTORS	b. IDENTIFIERS/OPEN ENDED TERMS	c. COSATI Field/Group
Air Pollution Assessments	Air Pollution Control Source Assessment Source Severity	68 A

18. DISTRIBUTION STATEMENT RELEASE TO THE PUBLIC	19. SECURITY CLASS (This Report) Unclassified 20. SECURITY CLASS (This page) Unclassified	21. NO. OF PAGES 192 22. PRICE

EPA Form 2220-1 (9-73)

☆ U.S. GOVERNMENT PRINTING OFFICE: 1978— 757-140/6624

U.S. ENVIRONMENTAL PROTECTION AGENCY
Office of Research and Development
Environmental Research Information Center
Cincinnati, Ohio 45268

OFFICIAL BUSINESS
PENALTY FOR PRIVATE USE, $300
AN EQUAL OPPORTUNITY EMPLOYER

POSTAGE AND FEES PAID
U.S. ENVIRONMENTAL PROTECTION AGENCY
EPA-335

Special Fourth-Class Rate
Book

If your address is incorrect, please change on the above label tear off; and return to the above address.
If you do not desire to continue receiving these technical reports, CHECK HERE ☐; tear off label, and return it to the above address,

EPA-600/2-77-107n