Note: This is a reference cited in *AP 42, Compilation of Air Pollutant Emission Factors, Volume I Stationary Point and Area Sources.* AP42 is located on the EPA web site at www.epa.gov/ttn/chief/ap42/

The file name refers to the reference number, the AP42 chapter and section. The file name "ref02_c01s02.pdf" would mean the reference is from AP42 chapter 1 section 2. The reference may be from a previous version of the section and no longer cited. The primary source should always be checked.

Let's protect our earth

State of New Jersey
DEPARTMENT OF ENVIRONMENTAL PROTECTION
DIVISION OF ENVIRONMENTAL QUALITY
CN 027, TRENTON, N.J. 08625

JORGE H. BERKOWITZ, Ph.D.
DIRECTOR

(609) 292-5383

February 6, 1989

MEMORANDUM

TO: Don Patterson

THROUGH: Edward Choromanski

FROM: Michael Pratt

SUBJECT: Hudson Materials, Inc.
APC Plant ID No. 25050
NJ Stack No. 003
Permit/Certificate to Operate (P/Ct) No. 073546

Emission tests were conducted at the above referenced facility on an asphalt plant controlled by a baghouse. The purpose of these tests was to determine Particulates, CO and THC emissions and then compare them to P/Ct No. 073546 allowables. Robert Tembrevilla reviewed the submitted test report. His report indicates that particle and THC emissions were smaller than P/Ct No. 073546 allowables. On the other hand, emissions of CO exceeded P/Ct No. 073546 allowables.

Amount of processed material during subject stack test (as reported by "RAMCON Environmental Corporation" in their stack test report) occasionally reached up to 310 tons/hr i.e. 37.8% more than P/Ct No. 073546 225 tons/hr.

New Jersey is an Equal Opportunity Employer
Recycled Paper

CONCLUSIONS:

1. Emissions of particulates and THC were in compliance with P/Ct No. 073546 allowables.

2. Emissions of CO exceeded P/Ct No. 073546 allowables.

3. Amount of processed material during subject stack test was about 1/3 larger than P/Ct No. 073546 provided data.

RECOMMENDATIONS:

Upgrade P/Ct No. 073546 to reflect higher production rates.

c Milton Polakovic
Lou Mikolajczyk
Michael Papp
Robert Tembrevilla

Let's protect our earth

State of New Jersey
DEPARTMENT OF ENVIRONMENTAL PROTECTION
DIVISION OF ENVIRONMENTAL QUALITY
CN 027, TRENTON, N.J. 08625

JORGE H. BERKOWITZ, Ph.D.
DIRECTOR

(609) 292-5383

January 19, 1989

MEMORANDUM

TO: Michael Pratt

FROM: Robert Tembrevilla

SUBJECT: Hudson Materials, Inc.
Flanders, New Jersey
NJ DEP ID No. 25050
NJ Stack No. 003

On November 3 - 4, 1988, source emissions tests were conducted for Hudson Materials, Inc.'s CMI drum mix asphalt Plant in Flanders, New Jersey. The stack (Log # 1-88-1129) was tested for particulate emissions compliance, carbon monoxide, and total hydrocarbons as methane conducted by Ramcon Environmental Corporation (REC) of Memphis, Tennessee. However, carbon monoxide and total hydrocarbons (as methane) emission rates were calculated by Technical Services using Ramcon's raw data.

Three (3) runs were done at the stack containing five (5) sampling ports (with six (6) points/port) for a total sampling time of 60 minutes per run. The third (3rd) run was repeated due to a post-leak check failure and classified in the final report (submitted by Ramcon) as Run #4.

The results reported by Ramcon are as follows:

PARTICULATES

PARTICULATES	RUN 1	RUN 2	RUN 4	PERMIT ALLOWABLE
CONCENTRATION (grains/scf)	0.0111	0.0123	0.0328	-
EMISSION RATE (lb/hr)	1.85	2.14	5.77	10.1
ISOKINETIC VARIATION (%)	98.7	95.9	95.2	-

New Jersey is an Equal Opportunity Employer
Recycled Paper

Results calculated by Technical Services are as follows:

CARBON MONOXIDE

CARBON MONOXIDE	RUN 1	RUN 2	RUN 4	PERMIT ALLOWABLE
CONCENTRATION (ppm)	490	595	640	100
CORRECTED TO 7%O_2 (ppm)*	2143.8	2603.1	2635.3	100
EMISSION RATE (lb/hr)	40.98	51.76	62.36	8.5

TOTAL HYDROCARBONS (AS METHANE)

THC (AS METHANE)	RUN 1	RUN 2	RUN 4	PERMIT ALLOWABLE
CONCENTRATION (ppm)	25	32.5	51.5	50
CORRECTED TO 7%O_2 (ppm)*	109.4	142.2	212.0	50
EMISSION RATE (lb/hr)	1.20	1.62	2.87	6.3

* Correction to 7% O_2 is required under the Permit and Certificate conditions for Log #1-88-1129.

PRODUCTION CONDITIONS

ACTUAL

	11-03-88	11-04-88	REQUIRED
OPERATION RATE (ton/hour)*	300	300	
ASPHALT TEMPERATURE (^{0}F)	292.5	297.5	400
FUEL CONSUMPTION (gallons/yr)	765000	765000	765000**

* At a 4% moisture.

** Total maximum gallons on No. 2 fuel oil burned per year by the drum mixer and a gross heat input (10^6 BTU/HR) of 70.0.

Technical Services calculations using the raw data supplied by Ramcon produced substantially the same results for particulate emissions.

These tests indicate that the particulate emissions were within the permit allowable (Log #1881129) for Run #1,#2, and #4. The isokinetic variations for all three runs are also within the allowable isokineticity of 100% ± 10%.

These tests also indicate that the carbon monoxide emissions rate exceed the permit allowable stated in Log #1881129 for all three runs. According to the Permit and Certificate conditions of Log #1881129, the CO concentration should not exceed 100 parts per million (ppm) but these tests indicate that the CO concentrations exceed 100 ppm by volume as measured and corrected to 7 percent oxygen, dry basis.

Both CO and THC (as methane) emission results were calculated by Technical Services using the raw data that Ramcon provided. It should also be noted that although correction to 7% O_2 (ppm) is required under Permit and Certificate Log #1881129, the memo (dated 9-12-88) by Chief Polakovic concerning determination of allowable THC and CO emission concentrations states that correction to 7% O_2 will not apply at oxygen concentrations in the flue gas of more than 14% in which the oxygen concentrations for Hudson Materials, Inc. exceed.

It should be noted that according to the on-site observer, Mr. Stafford Stewart of Technical Services, Ramcon testing team had performed the post-leak check for the third particulate run (stated as Run #4 in Ramcon report) while Mr. Stewart momentarily "turned away". Thus the status of this run is questionable (incident recorded on the Emission Test Observation sheet for Hudson Materials, Inc. by Mr. Stafford Stewart).

RAMCON

ENVIRONMENTAL CORPORATION

SOURCE SAMPLING
for
PARTICULATE EMISSIONS
HUDSON MATERIALS, INC.
Flanders, New Jersey
November 3-4, 1988

Richard D. Jacquin
Dell Contractors, Inc.

G. Sumner Buck, III
President

Ken Allmendinger
Team Leader

RAMCON BUILDING, 223 SCOTT STREET, MEMPHIS, TENNESSEE 38112
TELEPHONE 800/458-4567 IN TENNESSEE 901/458-7000 FAX 901-458-3868

RAMCON
ENVIRONMENTAL CORPORATION

November 17, 1988

Mr. Richard D. Jacquin
Dell Contractors, Inc.
1 Hill Street
Patterson, NJ 07052

Re: Particulate Emissions Test - Flanders, New Jersey

Dear Mr. Jacquin:

Enclosed you will find four copies of our report on the particulate emissions tests we conducted at Hudson Materials' plant located in Flanders, New Jersey. Based on our test results, this plant does pass both EPA New Source Performance Standards and those set by the State of New Jersey. The average grain loading of the three test runs was below the allowable emissions standard set by EPA and the State of New Jersey. Therefore, this plant is operating in compliance with State and Federal Standards.

You will want to sign the report covers and send two copies to:

Mr. Stafford Stewart
New Jersey DEQ
380 Scotch Road
West Trenton, NJ 08628

One copy of the report should be kept at the plant.

We certainly have enjoyed working with you and we look forward to serving you again in the future.

Sincerely,

G. Sumner Buck, III
President

GSBIII:mew

Enclosures

RAMCON BUILDING, 223 SCOTT STREET, MEMPHIS, TENNESSEE 38112
TELEPHONE 800/458-4567 IN TENNESSEE 901/458-7000 FAX 901-458-3868

TABLE OF CONTENTS

I.	INTRODUCTION	1
II.	TEST RESULTS	1
III.	TEST PROCEDURES	2
IV.	SOURCE	4
V.	EQUIPMENT USED	10
VI.	LABORATORY PROCEDURES & RESULTS	11
VII.	CALCULATIONS	23
VIII.	FIELD DATA	45
IX.	CALIBRATIONS	55
X.	RAMCON PERSONNEL	62

I. INTRODUCTION

On November 3-4, 1988, personnel from RAMCON Environmental Corporation (REC) conducted a source emissions test for particulate emissions compliance at Hudson Materials, Inc.'s CMI drum mix plant located in Flanders, New Jersey. RAMCON personnel conducting the test were Ken Allmendinger, Team Leader, and Bill Turner. Kim Rea was responsible for the particulate laboratory analysis including taring the beakers and filters and recording final data in the laboratory record books. Custody of the samples was limited to Mr. Allmendinger and Ms. Rea.

The purpose of the test was to determine if the rate of particulate emissions from the plant's baghouse and the total contaminants by weight (grain loading) is below the allowable N.S.P.S. limits set by the State of New Jersey.

II. TEST RESULTS

Table I summarizes the test results. The grain loading limitation for EPA is specified in 39 FR 9314, March 8, 1974, 60.92 Standards for Particulate Matter (1), as amended. The allowable N.S.P.S. particulate emissions for EPA is .04 gr/dscf, and the State of New Jersey is .02 gr/dscf.

Mr. Stafford Stewart of the New Jersey Division of Environmental Quality observed the testing conducted by RAMCON.

TABLE I

SUMMARY OF TEST RESULTS
November 3-4, 1988

Test Run	Time	Grain Loading	Isokinetic Variation	Actual Emissions
1	09:30 to 10:40	0.0111 gr/DSCF	98.7%	1.85 lbs/hr
2	11:30 to 12:39	0.0123 gr/DSCF	95.9%	2.14 lbs/hr
4	07:28 to 08:38	0.0262 gr/DSCF	95.2%	5.06 lbs/hr
	Average:	0.0154 gr/DSCF		3.02 lbs/hr

On the basis of these test results, the average grain loading of the three test runs was below the .04 gr/DSCF emissions limitation set by US EPA and the .02 gr/ACFM set by the State of New Jersey. Therefore, the plant is operating in compliance with State and Federal Standards.

III. TEST PROCEDURES

A. Method Used: The source sampling was conducted in accordance with requirements of the U.S. Environmental Protection Agency as set forth in 39 FR 9314, March 8, 1974, 60.93, as amended.

B. Problems Encountered: Test run #3 was repeated when the post-test leak rate was discovered to be above the allowable limit.

C. Sampling Site: The emissions test was conducted after a baghouse on a rectangular stack measuring 51" x 39" with an equivalent diameter of 44.2". Five sampling ports were placed 56" down (1.3 diameters upstream) from the top of the stack and 223" up (5.0 diameters downstream) from the last flow disturbance. Thirty points were sampled, six through each port for two minutes each, for a total sampling time of 60 minutes per test run.

Points on a Diameter	Probe Mark
1	*10.3"
2	18.8"
3	27.3"
4	35.8"
5	44.3"
6	52.8"

*Measurements include a 6" standoff.

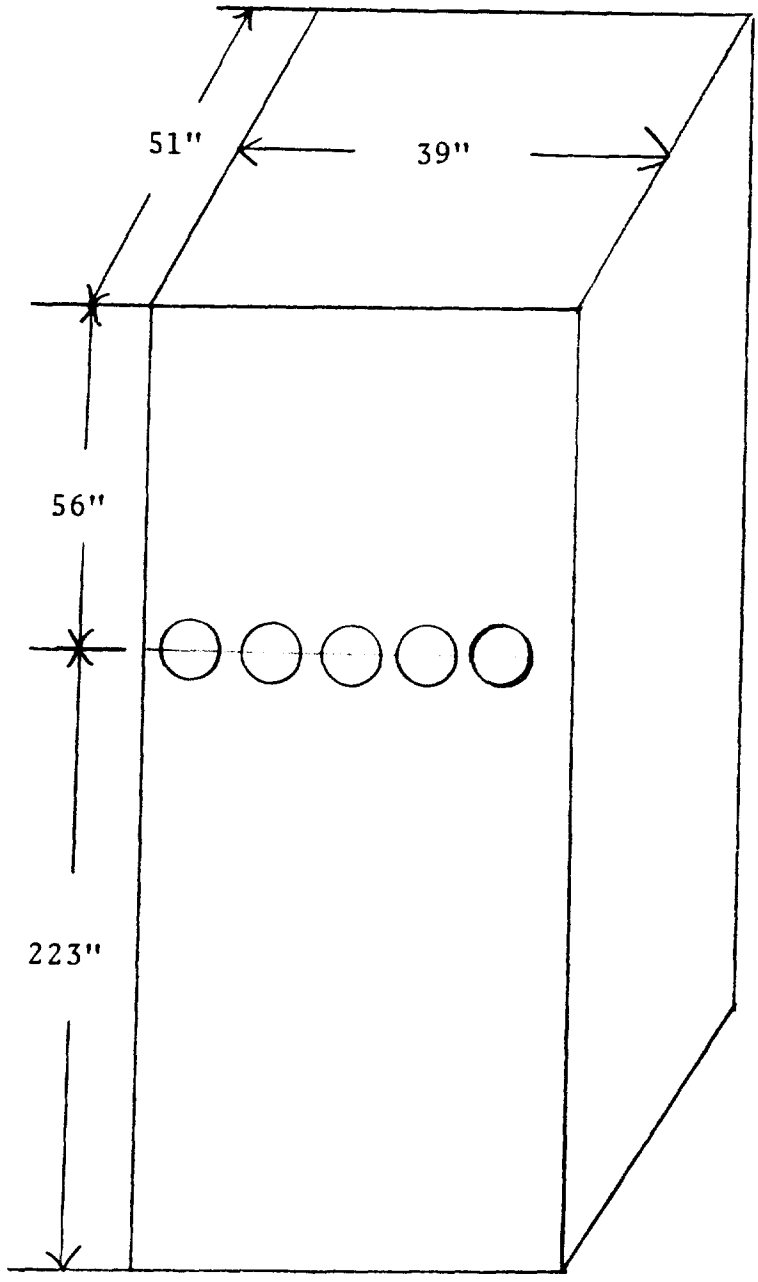

IV. THE SOURCE

IV. THE SOURCE

Hudson Materials, Inc. employs a CMI drum mix asphalt plant which is used to manufacture hot mix asphalt for road pavement. The process consists of blending prescribed portions of cold feed materials (sand, gravel, screenings, chips, etc.) uniformly and adding sufficient hot asphalt oil to bind the mixture together. After the hot asphalt mix is manufactured at the plant, it is transported to the location where it is to be applied. The hot asphalt mix is spread evenly over the surface with a paver and then compacted with a heavy roller to produce the final product.

The following is a general description of the plant's manufacturing process: The cold feed materials (aggregate) are dumped into separate bins which in turn feed a common continuous conveyor. The aggregate is dispensed from the bins in accordance with the desired formulation onto the cold feed system conveyor to an inclined weigh conveyor then to a rotating drum for continuous mixing and drying at approximately 300°F. The required amount of hot asphalt oil is then injected onto and mixed into the dried aggregate. The now newly formed hot asphalt mix is pulled to the top of a storage silo by conveyor. The hot asphalt mix is then discharged from the storage silo through a slide gate into waiting dump trucks, which transport the material to a final destination for spreading. The rated capacity of the plant will vary with each aggregate mix and moisture content with a 5% moisture removal.

The drum dryer uses a burner a burner fired with #2 fuel oil to heat air to dry the aggregate, and the motion of the rotating drum to blend the aggregate and hot asphalt oil thoroughly. The air is drawn into the system via an exhaust fan. After passing through the burner and the mixing drum, the air passes through a baghouse. The baghouse was manufactured by CMI. The exhaust gas is drawn through the baghouse and discharged to the atmosphere through the stack. The design pressure drop across the tube sheet is 1-6 inches of water. The particulate matter, which is removed by the baghouse, is reinjected into the drum mixer.

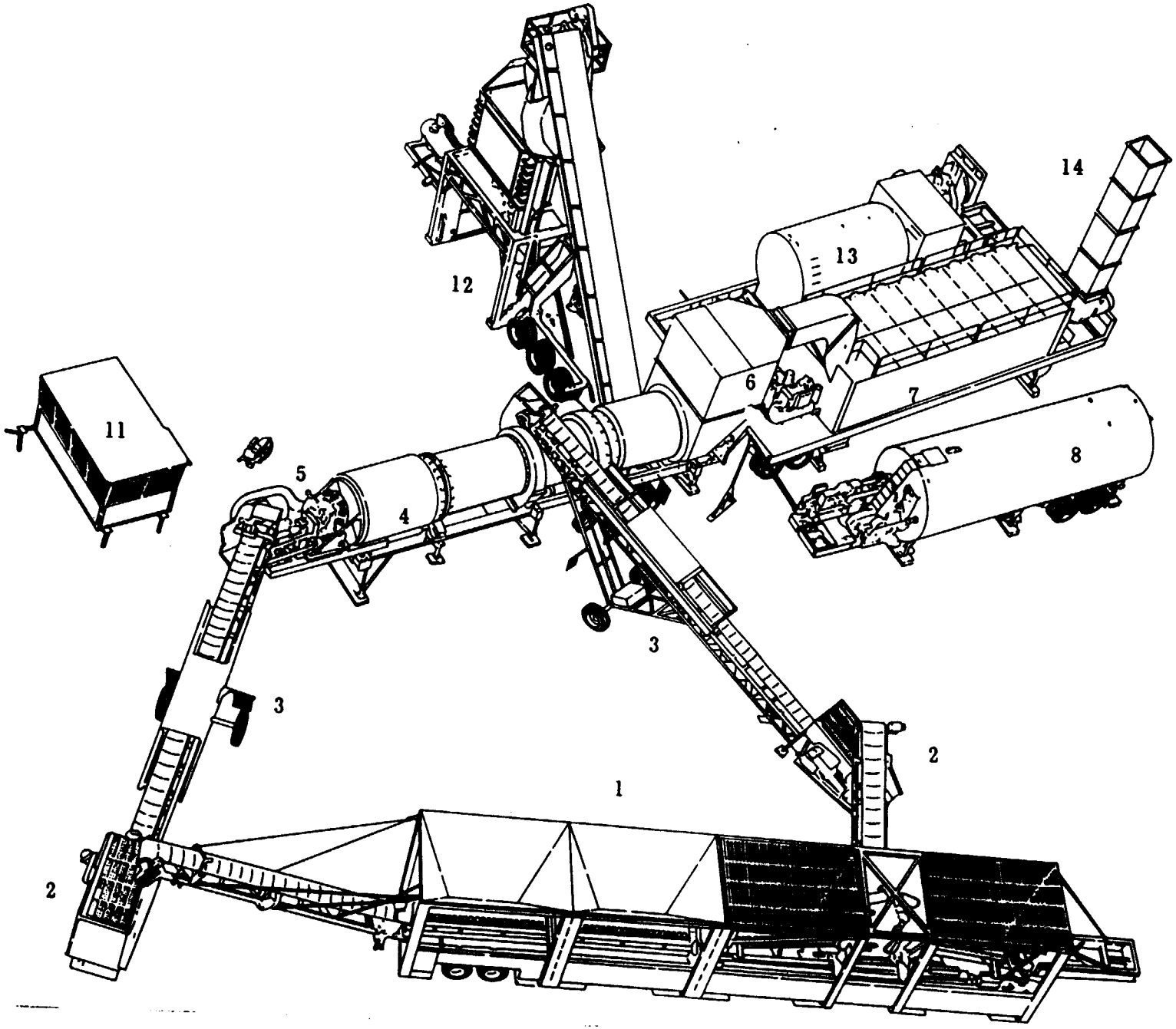

CMI drum mixer plant (baghouse)

1. Aggregate bins: Virgin aggregate is fed individually into each of four bins by type. It is metered onto a conveyor belt running under the bins to a shaker screen. The proporation of each aggregate type is determined by the job mix formula and pre-set to be metered out to meet these specifications.

2. Preliminary oversize screen: The aggregate is fed through a shaker screen where oversize rocks and foreign material is screened out of the mix.

3. Weigh conveyor belt: The aggregate is conveyed to the rotary drum dryer on a conveyor belt which weighs the material. The production rate is determined by this weight reading.

4. Rotary drum dryer/mixer: The aggregate is fed into the rotary drum dryer where it is tumbled by flighting into a veil in front of a flame which drives off the moisture. Further mixing is also accomplished in this drum. Hot liquid asphalt is injected into the drum where it is blended with the aggregate. Mixing continues in a coater located at the end of the drum.

5. Burner: The fuel fired burner is used to provide the flame which drys the aggregate.

6. Knock off baffleing: A baffeling plate is inserted in the "dirty" side plenum as a knock out for heavy particles in the air stream. These particles fall to the bottom of the baghouse.

7. Baghouse: The hot gases are pulled through the bags into the clean air plenum. The solid particulate matter is trapped on the dust coat buildup on the bags. A bag cleaning cycle consisting of jet burst of air from the inside (or clean air side) of the bags sends a large bubble of air down the inside of the bags shaking loose buildup on the bag surface. This particulate matter is collected at the bottom of the baghouse and reinjected into the drum mixer where it is used as part of the finished project.

8. Liquid asphalt storage: The liquid asphalt is stored in this heated tank until it is needed in the mixer. The amount of asphalt content and its temperature are pre-set for each different type job.

9. Conveyor to surge/storage bin: The finished product of aggregate mixed with liquid asphalt is conveyed to a surge bin.

10. Surge/Storage bin: The asphaltic cement is dumped into this surge bin and metered out to dump trucks which pull underneath a slide gate at the bottom of the bin.

11. Control/operators house: The entire plant operation is controlled from this operator's house.

12. Truck loading scale: As the trucks receive the asphalt from the storage/surge bin they are weighed on the loading scale which tells the plant operator the amount of asphalt that is being trucked on each individual load.

13. Fuel Storage

14. Stack

DATA SUMMARY

Plant

1. Manufacturer of plant CMI CATERPILLAR.
2. Designed maximum operating capacity 325 TPH @ 5 % moisture.
3. Actual operation rate 300 TPH @ 4 % moisture.
4. Startup date May 1, 1988.
5. Type of fuel used in dryer #2 FUEL OIL.
6. Quanity of fuel consumption 765,000/YR.

Aggregate

7. Name/type of mix IS.
8. Percent asphalt in mix 5.2. %.
9. Temperature of asphalt 290°F.
10. Sieve/Screening analysis: % Passing;

1"		3/8"	94	#50	16
3/4"		#4	63	#AC.	5.50
1/2"	100	#8	42	#200	6.7

Baghouse

11. Manufacturer CMI CATERPILLAR.
12. No. of bags 810. Type of bags NOMEX NEEDLEFELT
13. Air to cloth ratio 4.26:1. Designed ACFM 51,500.
14. Square feet of bags 12,085 FT^2.
15. Type of cleaning; pulse jet Yes, reverse air ____, plenum pulse ____, other ____.
16. Cleaning cycle time 12.
17. Interval between cleaning cycle 144.
18. Pressure drop across baghouse 3" psi.
19. Pulse pressure on cleaning cycle 100 psi.

COMPANY NAME CMI DATE 11/03/88

COMPANY REPRESENTATIVE Tom MacFadden

PLANT DATA

COMPANY NAME Hudson Materials

COMPANY REP. _____ DATE 11/03/88 PHONE # 201-347-2526

DATA SOURCE _____

PLANT LOCATION Flanders, N.J.

PLANT MFG. CMI/CAT PLANT MODEL # PUM 2000 PLANT TYPE Drum Mix ASP.

MIX SPECIFICATION # I 5 Top OIL SPECIFICATION # 2 Diesel

	Time 24 Hour	#2 Fuel Oil ✓ Nat. Gas ___ Propane ___ Coal ___	Burner Setting 70	Aggregate TPH	Recycle TPH	Liquid Asphalt TPH	Mix Temp. °F	✓ Venturi Baghouse Pressure Drop 3 Inches Water
	0830			290	Ø	15.79	290	
	45		72	288	Ø	15.91	285	2.8
	0900		72	292	Ø	15.68	285	2.9
	15		72	287	Ø	15.85	290	2.9
	30		75	279	Ø	15.81	280	2.9
	45		75	291	Ø	15.65	285	2.8
	1000		75	285	Ø	15.91	295	2.8
	1015		75	292	Ø	15.78	295	2.9
	30		75	284	Ø	16.02	295	2.9
	45		Ø	Ø	Ø	Ø	Ø	Ø
	1100		Ø	Ø	Ø	Ø	Ø	Ø
	15		70	260	Ø	15.5	290	3.0
	30		75	284	Ø	16.01	295	2.9
#2	45		72	285	Ø	15.76	295	2.8
	1200		75	295	Ø	15.98	290	2.9
	15		72	288	Ø	16.02	295	2.8
	30		72	290	Ø	15.66	295	2.7
	45		Ø	Ø	Ø	Ø	Ø	Ø
	1330		~~75~~ 70	295	0	15.60	295	2.9
	45		72	291	Ø	15.77	300	2.8
#3	1400		70	294	Ø	15.79	295	2.8
	15		70	287	Ø	15.83	295	2.9
	1430		70	287	Ø	15.75	295	2.8
	45		70	291	Ø	15.63	295	2.9
	1500							

#A test #1 test

REC #04

PLANT DATA

COMPANY NAME Hudson Materials INC

COMPANY REP. _____ DATE 11/04/88 PHONE # _____

DATA SOURCE _____

PLANT LOCATION Flanders NJ

PLANT MFG. CMI/CAT PLANT MODEL # RM 2000 PLANT TYPE Drum Mix

MIX SPECIFICATION # I-5 Top OIL SPECIFICATION # #2 Diesel

Time 24 Hour	#2 Fuel Oil ✓ Nat. Gas __ Propane __ Coal __	Burner Setting	Aggregate TPH	Recycle TPH	Liquid Asphalt TPH	Mix Temp. °F	Venturi __ Baghouse ✓ Pressure Drop Inches Water
0730		70	279.8	0	15.84	295	2.8
0745		70	287.2		15.48	290	2.8
0800		70	293.0		16.01	300	2.8
15		65	287.4		15.77	300	2.8
30		65	287.6		15.76	300	2.8
45		65	284.6		15.72	300	2.8
0900							

REC #04

V. EQUIPMENT USED

V. EQUIPMENT USED

Equipment used on conducting the particulate emissions test was:

A. The Lear Siegler PM-100 stack sampler with appropriate auxillary equipment and glassware. The train was set up according to the schematic on the nex page.

B. An Airguide Instruments Model 211-B (uncorrected) aneroid barometer was used to check the barometric pressure.

C. Weston dial thermometers are used to check meter temperatures. An Analogic Model 2572 Digital Thermocouple is used for stack temperatures.

D. A Hays 621 Analyzer was used to measure the oxygen, carbon dioxide and carbon monoxide content of the stack gases. For non-combustion sources, A Bacharach Instrument Company Fyrite is used for the gas analysis.

E. Filters are mady by Schleicher and Schuell and are type 1-HV with a porosity of .03 microns.

F. The acetone is reagent grade or ACS grade with a residue of $\leq$ .001.

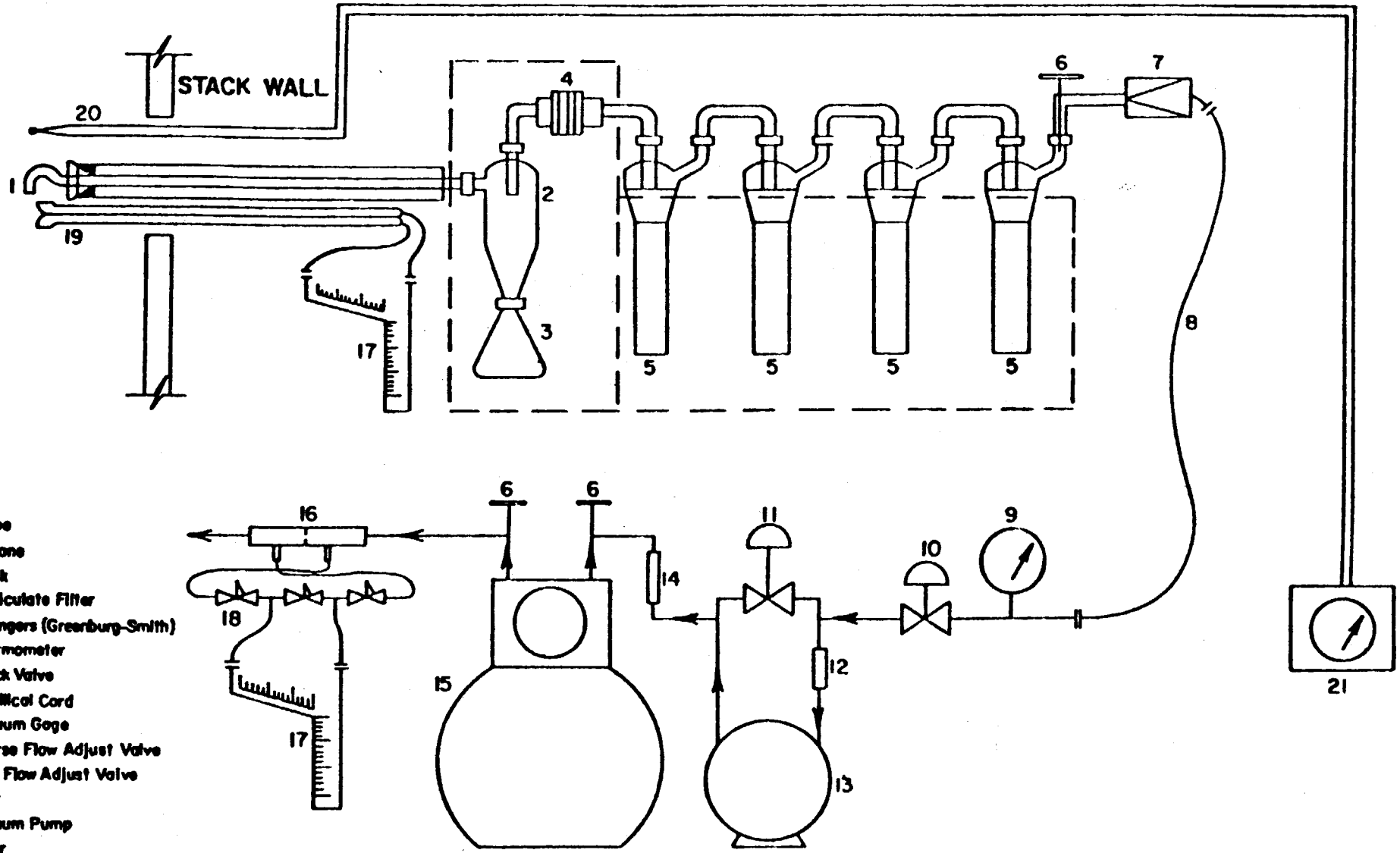

1) Probe
2) Cyclone
3) Flask
4) Particulate Filter
5) Impingers (Greenburg-Smith)
6) Thermometer
7) Check Valve
8) Umbilical Cord
9) Vacuum Gage
10) Course Flow Adjust Valve
11) Fine Flow Adjust Valve
12) Oiler
13) Vacuum Pump
14) Filter
15) Dry Gas Meter
16) Orifice Tube
17) Incline Manometer
18) Solenoid Valves
19) Pitot
20) Thermocouple
21) Pyrometer

SAMPLING TRAIN
USED FOR ISOKINETIC SAMPLING

VI. LABORATORY PROCEDURES & RESULTS

LABORATORY PROCEDURES FOR PARTICULATE SAMPLING

I. Field Preparation

A. FILTERS: Fiberglass 4" sampling filters are prepared as follows:

Filters are removed from their box and numbered on the back side with a felt pen. The numbering system is continuous from job to job. The filters are placed in a dessicator to dry for at least 24 hours. Clean plastic petri dishes, also numbered, top and bottom, are placed in the dessicator with the filters. After dessication, the filters are removed one at a time and weighed on the Sartorius analytical balance, then placed in the correspondingly numbered petri dish. Weights are then recorded in the lab record book. Three filters are used for each complete particulate source emissions test and there should be several extra filters included as spares.

B. SILICA GEL: Silica Gel used for the test is prepared as follows:

Approximately 200 g of silica gel is placed in a wide mouth "Mason" type jar and dried in an oven (175°C for two hours). The open jars are removed and placed in a dessicator until cool (2 hours) and then tightly sealed. The jars are then numbered and weighed on the triple beam balance to the closest tenth of a gram, and this weight is recorded for each sealed jar. The number of silica gel jars used is the same as the number of filters. Silica gel should be indicating type, 6-16 mesh.

II. Post-Testing Lab Analysis

A. FILTERS: The filters are returned to the lab in their sealed petri dishes. In the lab, the dishes are opened and placed into a dessicator for at least 24 hours. Then, the filters are weighed continuously every 6 hours until a constant weight is achieved. All data is recorded on the laboratory forms that will be bound in the test report.

Alternately, the test team may opt to oven dry the filters at 220°F for two to three hours, weigh the sample, and use this weight as a final weight.

B. SILICA GEL: The silica gel used in the stack test is returned to the appropriate mason jar and sealed for transport to the laboratory where it is reweighed to a constant weight on a triple-beam balance to the nearest tenth of a gram.

C. PROBE RINSINGS: In all tests, where a probe washout analysis is necessary, this is accomplished in accordance with procedures specified in "EPA Reference Method 5". These samples are returned in sealed mason jars to the laboratory for analysis. The front half of the filter holder is washed in accordance with the same procedures and included with the probe wash. Reagent or ACS grade acetone is used as the solvent. The backhalf of the filter holder is washed with deionized water into the impinger catch for appropriate analysis.

D. IMPINGER CATCH: In some testing cases, the liquid collected in the impingers must be analyzed for solid content. This involves a similar procedure to the probe wash solids determination, except that the liquid is deionized water.

E. ACETONE: Conduct a blank analysis of acetone from the one gallon glass container. This acetone will be used in the field for rinsing the probe, nozzle, and top half of the filter holder. Performing such a blank analysis prior to testing will insure that the quality of the acetone to be used will not exceed the .001% residual purity standard.

SPECIAL NOTE

When sampling sources high in moisture content, (such as asphalt plants) the filter paper sometimes sticks to the filter holder. When removing the filter, it may tear. In order to maintain control of any small pieces of filter paper which may be easily lost, they are washed with acetone into the probe washing. This makes the filter weight light (sometimes negative) and the probe wash correspondingly heavier. The net weight is the same and no particulate is lost. This laboratory procedure is taught by EPA in the Quality Assurance for Source Emissions Workshop at Research Triangle Park and is approved by EPA.

WEIGHING PROCEDURE - SARTORIUS ANALYTICAL BALANCE

The Sartorius balance is accurate to 0.1 mg and has a maximum capacity of 200 grams. The balance precision (standard deviation) is 0.05 mg. Before weighing an item, the balance should first be zeroed. This step should be taken before every series of weighings. To do this, the balance should have all weight adjustments at "zero" position. The beam arrest lever (on the lower left hand side toward the rear of the balance) is then slowly pressed downward to full release position. The lighted vernier scale on the front of the cabinet should align the "zero" with the mark on the cabinet. If it is not so aligned, the adjustment knob on the right hand side (near the rear of the cabinet) should be turned carefully until the marks align. Now return the beam arrest to horizontal arrest position. The balance is now "zeroed".

To weigh an item, it is first placed on the pan. And the sliding doors are closed to avoid air current disturbance. The weight adjustment knob on the right hand side must be at "zero". The beam arrest is then slowly turned upward. The lighted scale at the front of the cabinet will now indicate the weight of the item in grams. If the scale goes past the divided area, the item then exceeds 100 g weight (about 3-1/2 ounces) and it is necessary to arrest the balance (beam arrest lever) and move the lever for 100 g weight away from you. It is located on the left hand side of the cabinet near the front, and is the knob closest to the side of the cabinet. The balance will not weigh items greater than 200 grams in mass, and trying to do this might harm the balance. Remember -- this is a delicate precision instrument.

After the beam is arrested, in either weight range, the procedure is the same. When the weight of the item in grams is found, "dial in" that amount with the two knobs on the left hand side (near the 100 g lever) color coded yellow and green. As you dial the weight, the digits will appear on the front of the cabinet. When the proper amount is dialed, carefully move the arrest lever down with a slow, steady turn of the wrist. The lighted dial will appear, and the right hand side knob (front of cabinet) is turned to align the mark with the lower of the two lighted scale divisions which the mark appears between. When these marks are aligned, the two lighted digits along with the two indicated on the right hand window on the cabinet front are the fractional weight in grams (the decimal would appear before the lighted digits) and the whole number of grams weight is the amount "dialed in" on the left.

In general, be sure that the beam is in "arrest" position before placing weight on or taking weight off of the pan. Don't "dial in" weight unless the beam is arrested. The balance is sensitive to even a hand on the table near the balance, so be careful and painstaking in every movement while weighing.

Form REC#8

SAMPLE ANALYTICAL DATA FORM

Plant Location Hudson Materials Relative humidity in lab 45 %

Sample Location hot mix asphalt plant Density of Acetone (pa) .7853 mg/ml

Blank volume (V_a) 200 ml

Date/Time wt. blank 11-7-88 Gross wt. 97.4383 mg

Date/Time wt. blank 11-8-88 Gross wt. 93.4377 mg

Ave. Gross wt. 93.4380 mg

Tare wt. 93.4377 mg

Weight of blank (m_{ab}) .0003 mg

Acetone blank residue concentration (C_a) (C_a) = (M_{ab}) / (V_a) (p_a) = (.000015 mg/g)

Weight of residue in acetone wash: $W_a = C_a V_{aw} p_a$ = (.000015)(200)(.7853) = (.0003)

		Run # 1	Run # 2	Run # 3
Acetone rinse volume (V_{aw})	ml	200	200	200
Date/Time of wt 11-7-88 Gross wt	g	100.4869	99.4856	95.0900
Date/Time of wt 11-8-88 Gross wt	g	100.4865	99.4852	95.0900
Average Gross wt	g	100.4867	99.4854	95.0900
Tare wt	g	100.4607	99.4610	95.0582
Less acetone blank wt (W_a)	g	.0003	.0003	.0003
Wt of particulate in acetone rinse (m_a)	g	.0257	.0241	.0315

Filter Numbers	#	KA-3085	KA-3084	KA-3068
Date/Time of wt 11-7-88 Gross wt	g	.5000	.5374	.5570
Date/Time of wt 11-8-88 Gross wt	g	.5000	.5370	.5567
Average Gross wt	g	.5000	.5372	.5569
Tare wt	g	.4982	.5302	.5037

Weight of particulate on filters(s) (m_f)	g	.0018	.0070	.0532
Weight of particulate in acetone rinse	g	.0257	.0241	.0315
Total weight of particulate (m_n)	g	.0275	.0311	.0847

Note: In no case should a blank residue greater than 0.01 mg/g (or 0.001% of the blank weight) be subtracted from the sample weight.

Remarks

Signature of analyst Kim Rea Signature of reviewer

Form REC#8

SAMPLE ANALYTICAL DATA FORM

Plant Location Hudson Materials Relative humidity in lab _____ %

Sample Location _____ Density of Acetone (pa) .78 mg/ml

Blank volume (V_a) _____ ml

Date/Time wt. blank _____ Gross wt. See Previous Page mg

Date/Time wt. blank _____ Gross wt. _____ mg

Ave. Gross wt. _____ mg

Tare wt. _____ mg

Weight of blank (m_{ab}) _____ mg

Acetone blank residue concentration (C_a) (C_a) = (M_{ab}) / (V_a) (p_a) = (mg/g)

Weight of residue in acetone wash: $W_a = C_a V_{aw} p_a$ = ( )( )( ) = ( )

		Run # 4	Run #	Run #
Acetone rinse volume (V_{aw})	ml			
Date/Time of wt _____ Gross wt	g	95.1687		
Date/Time of wt _____ Gross wt	g	95.1682		
Average Gross wt	g	95.1685		
Tare wt	g	95.1169		
Less acetone blank wt (W_a)	g	.0003		
Wt of particulate in acetone rinse (m_a)	g	.0513		

Filter Numbers	#	KA-3069		
Date/Time of wt _____ Gross wt	g	.5276		
Date/Time of wt _____ Gross wt	g	.5275		
Average Gross wt	g	.5276		
Tare wt	g	.5059		

Weight of particulate on filters(s) (m_f)	g	.0217		
Weight of particulate in acetone rinse	g	.0513		
Total weight of particulate (m_n)	g	.0730		

Note: In no case should a blank residue greater than 0.01 mg/g (or 0.001% of the blank weight) be subtracted from the sample weight.

Remarks _____

Signature of analyst Kim Rea Signature of reviewer [illegible]

CO Test Results

Run	Percent O_2	PPM CO	CO PPM Corrected
1	17.8	490	2,197
2	17.8	595	2,668
4	17.6	640	2,696

$$\text{CO ppm corrected} = \text{ppm CO} \quad \frac{20.9 - 7}{20.9 - O_2\%}$$

CO analysis was accomplished using a FUJI 730 NDIR single gas analyzer by US EPA Method 10. A copy of the instrument specifications follows.

0
10
20
30
40
50
60
70
80
90
100

Environmental Products

Whittaker

FUJI 730

NDIR SINGLE GAS ANALYZER

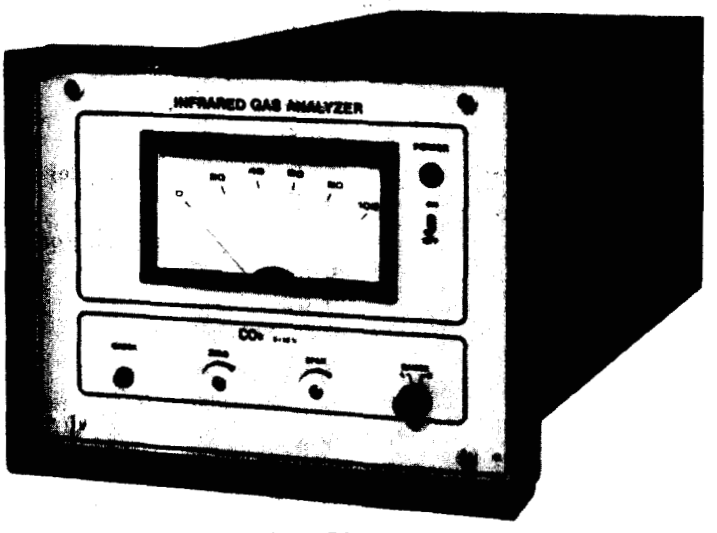

Analog Display Shown, Digital Display Available

- **Unique Mass Flow Sensor System Eliminates Interference**
- **Ideal For Applications In**
  - **Combustion Monitoring/Control**
  - **Hydrocarbon Monitoring**
- **Measures In Two Ranges**
  - **Carbon Monoxide (CO)**
  - **Carbon Dioxide (CO_2)**
  - **Methane (CH_4)**
- **Designed For Continuous Operation and Low Maintenance**

The unique Mass Flow Sensor used in the Fuji 730 Single Gas Analyzer provides significant advantages over other sensors used for this purpose. The design of the Mass Flow Detector minimizes the adverse effects of vibration which is often present in harsh environments. In addition, the Mass Flow Sensor System virtually eliminates interference making the Fuji 730 a powerful analytical tool for monitoring burner and boiler efficiency, heat treatment, fermentation, well logging and many other applications which require exceptional accuracy, stability, high sensitivity and reliability.

See specifications on reverse side

FUJI 730 Single Gas Analyzer

PRINCIPLE OF OPERATION

The Fuji 730 Series Analyzers use the infrared absorption characteristic of gases to measure the concentration of gas samples. An efficient single beam design which incorporates a unique mass flow sensor system insures accurate and interference free analysis for a wide variety of applications.

A single beam of infrared energy is chopped and passed through a sample cell containing the flowing gas sample. Due to the absorption characteristic, the amount of energy in the beam is reduced by the concentration of the measured gas in the sample. The attenuated infrared beam is passed serially through the two cavities of the mass flow sensor which contain a high concentration of the gas species the analyzer is intended to measure. The two cavity sensor performs two functions in the analyzing process, it first eliminates interference caused by other gases and water vapor by detecting and subtracting the interference component from the detector output, and secondly, produces an output signal which represents an accurate duplication of the relative infrared energy absorption. This resultant signal is electronically processed and linearized to provide an electrical signal which drives meters and other output devices.

Standard Gases

Carbon Monoxide (CO)
Carbon Dioxide (CO_2)
Methane (CH_4)

Standard Ranges

0 - 500/1000 ppm
0 - 1000/2000 ppm
0 - 2000/5000 ppm
0 - 2500/5000 ppm
0-0.5/1.0%
0-1/2%
0-2/5%
0-5/10%
1-10/20%

Purge Gas Fitting

Standard Equipment

Internal Span Check Feature

Calibration check without the use of span gases.
Conserves gas and reduces operating costs.

Specifications

Repeatability

± 0.5% of full scale (low range)
± 1.0% of full scale (high range)

Zero Drift*

± 1% of full scale per 24 hours

Span Drift*

± 1% of full scale per 24 hours

Linearity

± 2% of full scale (with linearizer)

Noise Level

0.5% of full scale

Speed of Response

90% indication

Electrical

2, 3, or 5 seconds (field selectable)

Pneumatic

less than 15 seconds (depending on cell length)

Warm-Up

Two hours (to ±2% full scale)

Internal Span Check

Manually activated from front panel

Outputs

0 to 1V DC, linear and 4-20mA DC, linear

Ambient Temperature Range

23 to 113°F (—5 to 45°C)

Ambient Humidity

To 90% R.H. (non-condensing)

Sample Gas Temperature

32 to 122°F (0 to 50°C)

Sample Gas Flow Rate

2 ±1 scfh (1.0 ±0.5 slpm)

Purge Gas Rate (where necessary)

2 scfh (1slpm) when required

Power Requirements

115V AC±10%, 60 Hz, 30VA

Gas Connections

All ¼ inch compression-type tube fittings

Size and Weight

7.9 (H) x 9.8 (W) x 21.3 (D) inches
(200 x 250 x 541 mm).
24.2 pounds (11 kg).

*constant conditions

Warranty
Whittaker warrants each new gas analyzer of its manufacture to be free of defects in material and workmanship for one year from the date of delivery. For full warranty information, contact your representative.

Whittaker Environmental Products

1915 Voyager Avenue, Simi Valley, California 93063 • (805) 526-8681 • Telex No. 65-1329 • Fax No. (805) 527-8332

The total hydrocarbons were measured using a J.U.M. Engineering Heated Total Hydrocarbon Analyzer Model VE7, by the State of New Jersey Air Test Method 3. A copy of the instrument specifications follows.

Test Run	TOC PPM
1	25
2	32.5
4	51.5

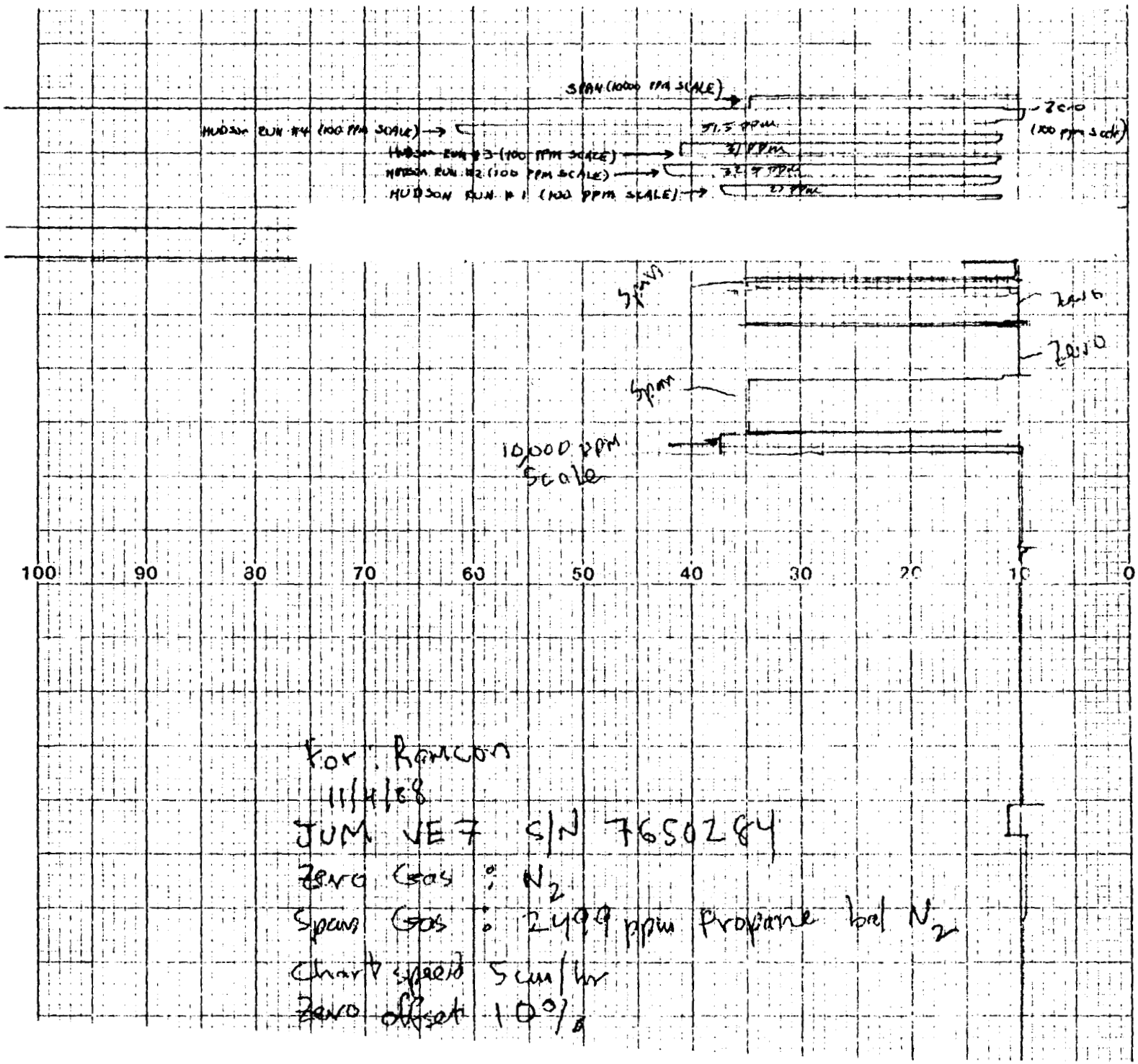

PRINTED IN U.S.A.
IC-0100-0026

J.U.M.® ENGINEERING

HEATED TOTAL HYDROCARBON ANALYZER

MODEL VE 7

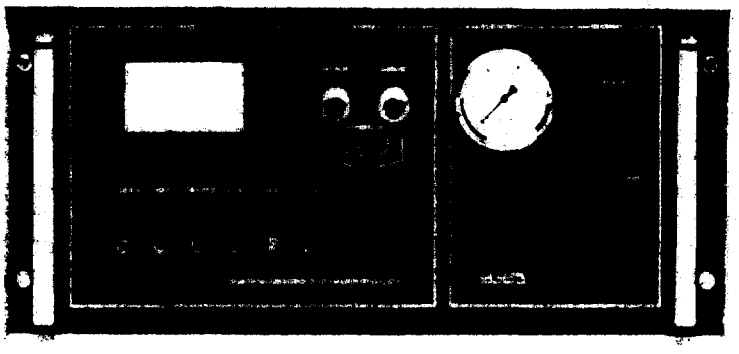

- **All heated components**
- **Integrated heated sample pump**
- **Permanent heated stainless steel 2 micron sample filter**
- **Built in burner air supply- no extra bottles needed**
- **Automatic fuel enrichment for ignition**
- **19 inch relay rack mount**
- **1% precision full scale**
- **Response time- 90% full scale within 1 second**

The J.U.M. Engineering Model VE 7 is a high accuracy Total Hydrocarbon Analyzer for the measurement and analysis of organic vapors.

The VE 7 utilizes a Hydrogen Flame Ionization Detector (FID) in a thermostatically controlled oven to prevent the loss of high molecular weight hydrocarbons.

Options

Digital display with BCD output/without BCD output
Remote range control and range I.D.
Recorder output of oven temperature

More Features

- Two level alarms with contact closures for high Concentration Caution and high Concentration Alarm (optional)
- Modular construction; mechanical, electric, pneumatic sections
- Remote range and calibration gas control (optional)
- Multichannel capability for simultaneous sampling and analysis of multiple streams, when used in parallel with one analyzer for each sample stream
- Direct reading in parts per million (ppm) or in percent lower explosive limit (LEL) – sensitive down to one ppm (as Methane)

MAJOR APPLICATIONS

- CONTROL OF SOLVENT RECOVERY SYSTEMS
- DIESEL RAW EXHAUST HYDROCARBONS ANALYSIS
- DIESEL PARTICULATE TUNNEL EPA SPECIFICATION HYDROCARBONS ANALYSIS SYSTEMS
- GASOLINE RAW EXHAUST ANALYSIS
- CATALYTIC CONVERTER TESTING
- CARBON ABSORPTION REGENERATION CONTROL
- STACK GAS HYDROCARBON EMISSIONS MONITORING
- STATIONARY ENGINE EXHAUST ANALYSIS
- LEL (LOWER EXPLOSIVE LIMIT) MONITOR OF SOLVENT-LADEN AIR

Principle of Flame Ionization Detector Operation

The flame ionization detector is based upon a burner in which a small flame is sustained by carefully regulated flows of air and fuel (normally either pure hydrogen or hydrogen/helium mixture). The burner jet is also used as an electrode and is connected to the negative side of a 300 v power supply. Also in the burner is a "collector" electrode which is connected to an electrical amplifier. These polarized electrodes establish an electrostatic field in the vicinity of the burner flame. When a sample of gas is passed into the burner it is ionized in the flame, and the electrostatic field causes the charged particles to migrate towards the electrodes. The positive ions are attracted to the burner jet and the negative ions (electrons) to the collector electrode. A small current now flows between the two electrodes and is used as an input signal to the electrometer amplifier. The current is measured by the amplifier and is displayed on the instrument meter as a percentage concentration.

If the sample gas used does not contain hydrocarbons, the ionization level is extremely small and only produces a very low background current. This background current, or "noise", can be completely eliminated by adjusting the ZERO control potentiometer when zeroing the instrument.

When, however, the sample gas contains hydrocarbons the ionization level is enormously increased, and is directly proportional to the number of carbon atoms in the sample. The analyser is therefore specific to hydrocarbons, with negligible interference from other species, it also has an output which is linear to the hydrocarbon concentration. As the analyser reading is proportional to the number of carbon atoms present, the GAIN potentiometer can be adjusted so that a direct reading can be given either as a specific hydrocarbon (e.g. ppm Propane, C_3H_8), or the methane equivalent (ppm CH_4 or C_1).

The proportional output of the analyser requires that the sample flow is carefully and consistently regulated. Thus the function of the analyser flow system is to deliver consistent, regulated flows of fuel, air and sample gas into the detector. To prevent heavier hydrocarbons condensing in the system and causing "hydrocarbon retention", a thermostatically controlled heating system is employed, and can be set at any desired temperature from ambient to 200° C. The sample pump, fitted in the standard instrument, is also heated. A heated sample filter is also incorporated to prevent the ingress of foreign matter into the detector, and a special feature of the J.U.M. F.I.D. is a BACKPURGE system which allows this filter to be cleaned without dismantling.

A RANGE switch gives up to 3 step changes which can be specified by the user. An ALARM can be set by the user to warn when a required hydrocarbon level is monitored. The instrument has been disigned with the users' needs very much in mind, and the options available enable the user to tailor the VE 7 to suit his exact requirements.

STANDARD SPECIFICATIONS:

Analysis Method:	Flame Ionization Detector (FID)
Sensitivity:	Max.: 1 ppm CH_4
Response Time:	90% of full scale in less than one second
Zero Drift:	1% of full scale per 24 hours
Span Drift:	1% of full scale per 24 hours
Linearity:	Within 1%
Oxygen Synergism:	Less, than 1% of selected range
Ranges:	Any three of the following: 0 – 10, 100, 1000, 10,000, 100,000 ppm
Outputs:	0 – 10 Volts D.C.
Display:	Analog Meter in ppm Hydrocarbon or in % LEL
Zero/Span Adjust:	Manual on front panel
Fuel Consumption:	Hydrogen: 20 cc/min. at 22 psig (1.5 Bar) Hydrogen/Helium 40/60 mix: 80 cc/min.
Air Consumption:	None; Integral Air generator
Zero & Span Gas:	3 psig (200 m Bar)
Sample Pump:	All Stainless Steel, heated, 3 liters per minute at operating temperature
Sample Pressure:	By Integral Pump 3 psig (200 m Bar)
Sample Filter:	Permanent all stainless steel, 2 micron back-purged for cleaning.
Analysis Temperature:	Adjustable 200 to 400°F (93 to 204°C)
Power Requirements:	110 Volts, 60 Hertz AC, 800 Watts (others on request)
Ambient Temperature:	32°F to 110°F (0 to 43°C)
Dimensions:	Width 483 mm (19 inches) Depth 460 mm (18 – 1/8 inches) Height 221 mm (8 – 3/4 inches)
Weight:	38,6 lbs. (17,5 kg)
Shipping Weight:	53 lbs. (24 kg)

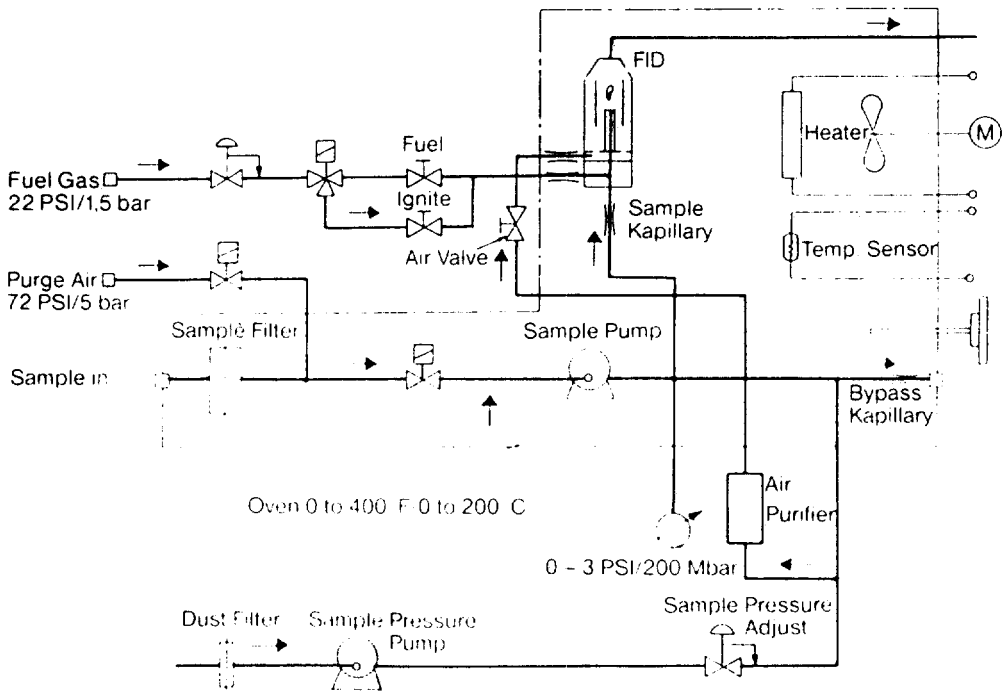

OUTLINE AND MOUNTING DIMENSIONS

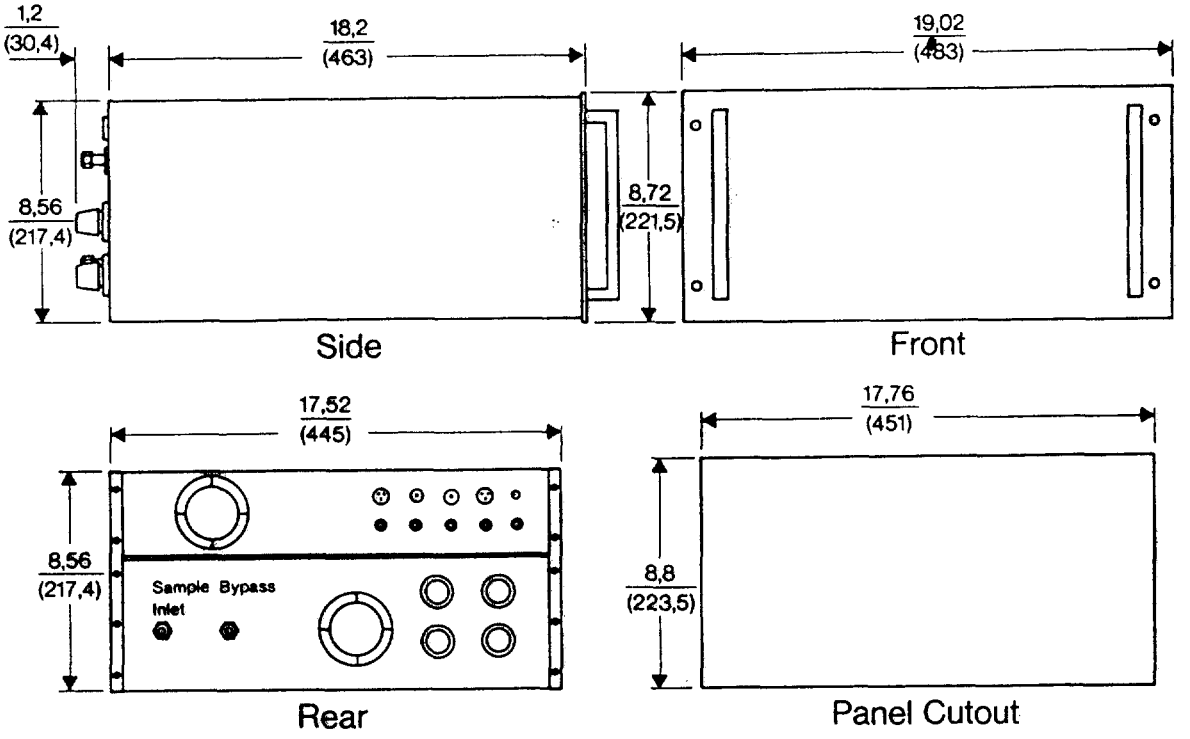

ORDERING INFORMATION:

Part Number	Description
1800007	Model VE7 All Heated Hydrocarbons Analyzer Ranges: 0 – 10, 100, 1000, 10,000, 100,000 ppm H.C. (three ranges)
1800017	Model VE7; Ranges; As specified
	Options:
30017	Digital Display 3½ digit
30007	Digital Display 3½ digit with BCD output
01007	Remote Range Control and Range I.D.
00707	Recorder Output of oven temperature

J.U.M. Engineering Ges. m. b. H.: reserves the right, at any time and without notice, to change specifications presented within this data sheet, and assumes no responsibility for the application or use of devices herein described.

Warranty

J.U.M. Engineering Ges. m. b. H.: warrants each new unit of its manufacture to be free of defects in material and workmanship for one year from the date of delivery.

(Assembled in Munich, West Germany)

P.A.C.E. ASSOCIATES, INC.
1750 COSTNER CIRCLE
WARRINGTON, PENNSYLVANIA 18976

Represented By:

[redacted]

VII. CALCULATIONS

SUMMARY OF TEST DATA

		11-3-88 RUN #1	11-3-88 RUN #2	11-3-88 RUN #3
SAMPLING TRAIN DATA				
	start	9:30	11:30	13:32
	finish	10:40	12:39	14:40
1. Sampling time, minutes	θ	60.0	60.0	60.0
2. Sampling nozzle diameter, in.	D_n	.2900	.2900	.2900
3. Sampling nozzle cross-sect. area, ft^2	A_n	.000459	.000459	.000459
4. Isokinetic variation	I	98.7	95.9	97.0
5. Sample gas volume - meter cond., cf.	V_m	39.208	40.140	41.564
6. Average meter temperature, ^oR	T_m	528	532	538
7. Avg. oriface pressure drop, in. H_2O	dH	1.39	1.39	1.48
8. Total particulate collected, mg.	M_n	27.50	31.10	84.70
VELOCITY TRAVERSE DATA				
9. Stack area, ft^2	A	13.80	13.80	13.80
10. Absolute stack gas pressure, in. Hg.	P_s	29.08	29.08	29.08
11. Barometric pressure, in. Hg.	P_{bar}	29.08	29.08	29.08
12. Avg. absolute stack temperature, R^o	T_s	756	757	768
13. Average $-\sqrt{\text{vel. head}}$, (C_p= .80)	$-\sqrt{dP}$	0.67	0.69	0.70
14. Average stack gas velocity, ft./sec.	V_s	44.99	46.16	47.14
STACK MOISTURE CONTENT				
15. Total water collected by train, ml.	V_{ic}	246.00	229.00	228.00
16. Moisture in stack gas, %	B_{ws}	23.30	21.77	21.37
EMISSIONS DATA				
17. Stack gas flow rate, dscf/hr.(000's)	Q_{sd}	1163	1216	1230
18. Stack gas flow rate, cfm	acfm	37252	38220	39032
19. Particulate concentration, gr/dscf	C_s	0.0111	0.0123	0.0328
20. Particulate concentration, lb/hr	E	1.85	2.14	5.77
21. Particulate concentration, lb/mBtu	E'	0.00000	0.00000	0.00000
ORSAT DATA				
22. Percent CO_2 by volume	CO_2	6.20	6.60	6.60
23. Percent O_2 by volume	O_2	17.80	17.80	17.40
24. Percent CO by volume	CO	.00	.00	.00
25. Percent N_2 by volume	N_2	76.00	75.60	76.00

Format: summryR3

SUMMARY OF TEST DATA

		11-4-88 RUN #4	RUN #5	RUN #6
SAMPLING TRAIN DATA				
	start	7:28		
	finish	8:38		
1. Sampling time, minutes	θ	60.0	.0	.0
2. Sampling nozzle diameter, in.	D_n	.2900	.0000	.0000
3. Sampling nozzle cross-sect. area, ft^2	A_n	.000459	.000000	.000000
4. Isokinetic variation	I	95.2	0.0	0.0
5. Sample gas volume - meter cond., cf.	V_m	43.799	.000	.000
6. Average meter temperature, ^oR	T_m	526	0	0
7. Avg. oriface pressure drop, in. H_2O	dH	1.66	0.00	0.00
8. Total particulate collected, mg.	M_n	73.00	.00	.00
VELOCITY TRAVERSE DATA				
9. Stack area, ft^2	A	13.80	.00	.00
10. Absolute stack gas pressure, in. Hg.	P_s	29.08	.00	.00
11. Barometric pressure, in. Hg.	P_{bar}	29.08	.00	.00
12. Avg. absolute stack temperature, R^o	T_s	750	0	0
13. Average $-\sqrt{vel.\ head}$, (C_p= .80)	$-\sqrt{dP}$	0.76	0.00	0.00
14. Average stack gas velocity, ft./sec.	V_s	50.58	0.00	0.00
STACK MOISTURE CONTENT				
15. Total water collected by train, ml.	V_{ic}	246.00	0.00	0.00
16. Moisture in stack gas, %	B_{ws}	21.30	0.00	0.00
EMISSIONS DATA				
17. Stack gas flow rate, dscf/hr.(000's)	Q_{sd}	1353	0	0
18. Stack gas flow rate, cfm	acfm	41880	0	0
19. Particulate concentration, gr/dscf	C_s	0.0262	0.0000	0.0000
20. Particulate concentration, lb/hr	E	5.06	0.00	0.00
21. Particulate concentration, lb/mBtu	E'	0.00000	0.00000	0.00000
ORSAT DATA				
22. Percent CO_2 by volume	CO_2	6.50	.00	.00
23. Percent O_2 by volume	O_2	17.60	.00	.00
24. Percent CO by volume	CO	.00	.00	.00
25. Percent N_2 by volume	N_2	75.90	.00	.00

Format: summryR3

$$V_{m(std)} = V_m \left[\frac{T_{(std)}}{T_m}\right]\left[\frac{P_{bar} + \frac{dH}{13.6}}{P_{(std)}}\right] = 17.64 \frac{^oR}{in.Hg}\ Y\ V_m \left[\frac{P_{bar} + \frac{dH}{13.6}}{T_m}\right]$$

Where:

$V_{m(std)}$ = Dry Gas Volume through meter at standard conditions, cu. ft.

V_m = Dry Gas Volume measured by meter, cu. ft.

P_{bar} = Barometric pressure at oriface meter, in. Hg.

P_{std} = Standard absolute pressure,(29.92 in. Hg.).

T_m = Absolute temperature at meter ^oR.

T_{std} = Standard absolute temperature (528^oR).

dH = Average pressure drop across oriface meter, in. H_2O.

Y = Dry gas meter calibration factor.

13.6 = Inches water per inches Hg.

RUN 1:

$$V_{m(std)} = (17.64)(\ .999)(\ 39.208)\left[\frac{(29.08) + \frac{1.39}{13.6}}{528}\right] = 38.188 \text{ dscf}$$

RUN 2:

$$V_{m(std)} = (17.64)(\ .999)(\ 40.140)\left[\frac{(29.08) + \frac{1.39}{13.6}}{532}\right] = 38.801 \text{ dscf}$$

RUN 3:

$$V_{m(std)} = (17.64)(\ .999)(\ 41.564)\left[\frac{(29.08) + \frac{1.48}{13.6}}{538}\right] = 39.739 \text{ dscf}$$

Dry Gas Volume

$$V_{m(std)} = V_m \left[\frac{T_{(std)}}{T_m}\right]\left[\frac{P_{bar} + \frac{dH}{13.6}}{P_{(std)}}\right] = 17.64 \frac{^oR}{in.Hg} \; Y \; V_m \left[\frac{P_{bar} + \frac{dH}{13.6}}{T_m}\right]$$

Where:

$V_{m(std)}$ = Dry Gas Volume through meter at standard conditions, cu. ft.

V_m = Dry Gas Volume measured by meter, cu. ft.

P_{bar} = Barometric pressure at oriface meter, in. Hg.

P_{std} = Standard absolute pressure,(29.92 in. Hg.).

T_m = Absolute temperature at meter ^oR.

T_{std} = Standard absolute temperature (528^oR).

dH = Average pressure drop across oriface meter, in. H_2O.

Y = Dry gas meter calibration factor.

13.6 = Inches water per inches Hg.

RUN 4:

$$V_{m(std)} = (17.64)(\ .999)(\ 43.799)\left[\frac{(29.08) + \frac{1.66}{13.6}}{526}\right] = 42.851 \text{ dscf}$$

RUN 5:

$$V_{m(std)} = (17.64)(\ .000)(\ \ .000)\left[\frac{(\ \ .00) + \frac{0.00}{13.6}}{0}\right] = 0.000 \text{ dscf}$$

RUN 6:

$$V_{m(std)} = (17.64)(\ .000)(\ \ .000)\left[\frac{(\ \ .00) + \frac{0.00}{13.6}}{0}\right] = 0.000 \text{ dscf}$$

Particulate concentration C_s' gr./dscf.

$$C_s' = \left[0.0154 \frac{gr}{mg} \right] \left[\frac{M_n}{V_{m(std)}} \right]$$

Where:

C_s' = Concentration of particulate matter in stack gas, dry basis, corrected to standard conditions,gr./dscf.

M_n = Total amount of particulate matter collected, mg.

$V_{m(std)}$ = Dry gas volume through meter at standard conditions, cu. ft.

Run 1:

$$C_s' = \left[0.0154 \frac{gr}{mg} \right] \left[\frac{27.50}{38.188} \right] = 0.0111 \text{ gr./dscf.}$$

Run 2:

$$C_s' = \left[0.0154 \frac{gr}{mg} \right] \left[\frac{31.10}{38.801} \right] = 0.0123 \text{ gr./dscf.}$$

Run 3:

$$C_s' = \left[0.0154 \frac{gr}{mg} \right] \left[\frac{84.70}{39.739} \right] = 0.0328 \text{ gr./dscf.}$$

Particulate concentration C_s' gr./dscf.

$$C_s' = \left[0.0154 \frac{gr}{mg} \right] \left[\frac{M_n}{V_{m(std)}} \right]$$

Where:

C_s' = Concentration of particulate matter in stack gas, dry basis, corrected to standard conditions,gr./dscf.

M_n = Total amount of particulate matter collected, mg.

$V_{m(std)}$ = Dry gas volume through meter at standard conditions, cu. ft.

Run 4:

$$C_s' = \left[0.0154 \frac{gr}{mg} \right] \left[\frac{73.00}{42.851} \right] = 0.0262 \text{ gr./dscf.}$$

Run 5:

$$C_s' = \left[0.0154 \frac{gr}{mg} \right] \left[\frac{.00}{0.000} \right] = 0.0000 \text{ gr./dscf.}$$

Run 6:

$$C_s' = \left[0.0154 \frac{gr}{mg} \right] \left[\frac{.00}{0.000} \right] = 0.0000 \text{ gr./dscf.}$$

$$M_d = 0.44(\%CO_2) + 0.32(\%O_2) + 0.28(\%CO + \%N_2)$$

Where:

M_d = Dry molecular weight, lb./lb.-mole.

$\%CO_2$ = Percent carbon dioxide by volume (dry basis).

$\%O_2$ = Percent oxygen by volume (dry basis).

$\%N_2$ = Percent nitrogen by volume (dry basis).

$\%CO$ = Percent carbon monoxide by volume (dry basis).

0.264 = Ratio of O_2 to N_2 in air, v/v.

0.28 = Molecular weight of N_2 or CO, divided by 100.

0.32 = Molecular weight of O_2 divided by 100.

0.44 = Molecular weight of CO_2 divided by 100.

Run 1:

$$M_d = 0.44(\ 6.20\%) + 0.32(17.80\%) + 0.28(\ .00\% + 76.00\%) = 29.70\ \frac{lb}{lb\text{-}mole}$$

Run 2:

$$M_d = 0.44(\ 6.60\%) + 0.32(17.80\%) + 0.28(\ .00\% + 75.60\%) = 29.77\ \frac{lb}{lb\text{-}mole}$$

Run 3:

$$M_d = 0.44(\ 6.60\%) + 0.32(17.40\%) + 0.28(\ .00\% + 76.00\%) = 29.75\ \frac{lb}{lb\text{-}mole}$$

Dry Molecular Weight

$$M_d = 0.44(\%CO_2) + 0.32(\%O_2) + 0.28(\%CO + \%N_2)$$

Where:

M_d = Dry molecular weight, lb./lb.-mole.

$\%CO_2$ = Percent carbon dioxide by volume (dry basis).

$\%O_2$ = Percent oxygen by volume (dry basis).

$\%N_2$ = Percent nitrogen by volume (dry basis).

$\%CO$ = Percent carbon monoxide by volume (dry basis).

0.264 = Ratio of O_2 to N_2 in air, v/v.

0.28 = Molecular weight of N_2 or CO, divided by 100.

0.32 = Molecular weight of O_2 divided by 100.

0.44 = Molecular weight of CO_2 divided by 100.

Run 4:

$$M_d = 0.44(\ 6.50\%) + 0.32(17.60\%) + 0.28(\ .00\% + 75.90\%) = 29.74\ \frac{lb}{lb\text{-}mole}$$

Run 5:

$$M_d = 0.44(\ .00\%) + 0.32(\ .00\%) + 0.28(\ .00\% + \ .00\%) = 0.00\ \frac{lb}{lb\text{-}mole}$$

Run 6:

$$M_d = 0.44(\ .00\%) + 0.32(\ .00\%) + 0.28(\ .00\% + \ .00\%) = 0.00\ \frac{lb}{lb\text{-}mole}$$

$$V_{wc_{std}} = \left[V_f - V_i \right] \left[\frac{p_w \; R \; T_{(std)}}{M_w \quad P_{(std)}} \right] = 0.04707 \left[V_f - V_i \right]$$

$$V_{wsg_{std}} = \left[W_f - W_i \right] \left[\frac{R \quad T_{(std)}}{M_w \quad P_{(std)}} \right] = 0.04715 \left[W_f - W_i \right]$$

Where:

0.04707 = Conversion factor, $ft.^3/ml$.

0.04715 = Conversion factor, $ft.^3/g$.

$V_{wc_{std}}$ = Volume of water vapor condensed (standard conditions), scf.

$V_{wsg_{std}}$ = Volume of water vapor collected in silica gel (standard conditions), ml.

$V_f - V_i$ = Final volume of impinger contents less initial volume, ml.

$W_f - W_i$ = Final weight of silica gel less initial weight, g.

p_w = Density of water, 0.002201 lb/ml.

R = Ideal gas constant, 21.85 in.Hg. (cu.ft./lb.-mole)(^oR).

M_w = Molecular weight of water vapor, 18.0 lb/lb-mole.

T_{std} = Absolute temperature at standard conditions, 528^oR.

P_{std} = Absolute pressure at standard conditions, 29.92 inches Hg.

Run 1:

$V_{wc(std)}$ = (0.04707) (235.0) = 11.1 cu.ft
$V_{wsg(std)}$ = (0.04715) (11.0) = 0.5 cu.ft

Run 2:

$V_{wc(std)}$ = (0.04707) (220.0) = 10.4 cu.ft
$V_{wsg(std)}$ = (0.04715) (9.0) = 0.4 cu.ft

Run 3:

$V_{wc(std)}$ = (0.04707) (220.0) = 10.4 cu.ft
$V_{wsg(std)}$ = (0.04715) (8.0) = 0.4 cu.ft

$$V_{wc_{std}} = \left[V_f - V_i \right] \left[\frac{p_w \; R \; T_{(std)}}{M_w \quad P_{(std)}} \right] = 0.04707 \left[V_f - V_i \right]$$

$$V_{wsg_{std}} = \left[W_f - W_i \right] \left[\frac{R \quad T_{(std)}}{M_w \quad P_{(std)}} \right] = 0.04715 \left[W_f - W_i \right]$$

Where:

0.04707 = Conversion factor, ft.^{3}/ml.

0.04715 = Conversion factor, ft.^{3}/g.

$V_{wc_{std}}$ = Volume of water vapor condensed (standard conditions), scf.

$V_{wsg_{std}}$ = Volume of water vapor collected in silica gel (standard conditions), ml.

$V_f - V_i$ = Final volume of impinger contents less initial volume, ml.

$W_f - W_i$ = Final weight of silica gel less initial weight, g.

p_w = Density of water, 0.002201 lb/ml.

R = Ideal gas constant, 21.85 in.Hg. (cu.ft./lb.-mole)(^{o}R).

M_w = Molecular weight of water vapor, 18.0 lb/lb-mole.

T_{std} = Absolute temperature at standard conditions, 528°R.

P_{std} = Absolute pressure at standard conditions, 29.92 inches Hg.

Run 4:

$V_{wc(std)}$ = (0.04707) (235.0) = 11.1 cu.ft
$V_{wsg(std)}$ = (0.04715) (11.0) = 0.5 cu.ft

Run 5:

$V_{wc(std)}$ = (0.04707) (.0) = 0.0 cu.ft
$V_{wsg(std)}$ = (0.04715) (.0) = 0.0 cu.ft

Run 6:

$V_{wc(std)}$ = (0.04707) (.0) = 0.0 cu.ft
$V_{wsg(std)}$ = (0.04715) (.0) = 0.0 cu.ft

$$B_{ws} = \frac{V_{wc_{std}} + V_{wsg_{std}}}{V_{wc_{std}} + V_{wsg_{std}} + V_{m_{std}}} \times 100$$

Where:

B_{ws} = Proportion of water vapor, by volume, in the gas stream.

V_m = Dry gas volume measured by dry gas meter,(dcf).

$V_{wc_{std}}$ = Volume of water vapor condensed corrected to standard conditions (scf).

$V_{wsg_{std}}$ = Volume of water vapor collected in silica gel corrected to standard conditions (scf).

Run 1:

$$B_{ws} = \frac{11.1 + 0.5}{11.1 + 0.5 + 38.188} \times 100 = 23.30\ \%$$

Run 2:

$$B_{ws} = \frac{10.4 + 0.4}{10.4 + 0.4 + 38.801} \times 100 = 21.77\ \%$$

Run 3:

$$B_{ws} = \frac{10.4 + 0.4}{10.4 + 0.4 + 39.739} \times 100 = 21.37\ \%$$

$$B_{ws} = \frac{V_{wc_{std}} + V_{wsg_{std}}}{V_{wc_{std}} + V_{wsg_{std}} + V_{m_{std}}} \times 100$$

Where:

B_{ws} = Proportion of water vapor, by volume, in the gas stream.

V_m = Dry gas volume measured by dry gas meter,(dcf).

$V_{wc_{std}}$ = Volume of water vapor condensed corrected to standard conditions (scf).

$V_{wsg_{std}}$ = Volume of water vapor collected in silica gel corrected to standard conditions (scf).

Run 4:

$$B_{ws} = \frac{11.1 + 0.5}{11.1 + 0.5 + 42.851} \times 100 = 21.30\ \%$$

Run 5:

$$B_{ws} = \frac{0.0 + 0.0}{0.0 + 0.0 + 0.000} \times 100 = 0.00\ \%$$

Run 6:

$$B_{ws} = \frac{0.0 + 0.0}{0.0 + 0.0 + 0.000} \times 100 = 0.00\ \%$$

$$M_s = M_d (1 - B_{ws}) + 18 (B_{ws})$$

Where:

M_s = Molecular weight of stack gas, wet basis, (lb./lb.-mole).

M_d = Molecular weight of stack gas, dry basis, (lb./lb.-mole).

Run 1:

M_s = 29.70 (1 - 23.30) + 18 (23.30) = 26.97 (lb./lb.-mole)

Run 2:

M_s = 29.77 (1 - 21.77) + 18 (21.77) = 27.21 (lb./lb.-mole)

Run 3:

M_s = 29.75 (1 - 21.37) + 18 (21.37) = 27.24 (lb./lb.-mole)

$$M_s = M_d (1 - B_{ws}) + 18 (B_{ws})$$

Where:

M_s = Molecular weight of stack gas, wet basis, (lb./lb.-mole).

M_d = Molecular weight of stack gas, dry basis, (lb./lb.-mole).

Run 4:

M_s = 29.74 (1 - 21.30) + 18 (21.30) = 27.24 (lb./lb.-mole)

Run 5:

M_s = 0.00 (1 - 0.00) + 18 (0.00) = 0.00 (lb./lb.-mole)

Run 6:

M_s = 0.00 (1 - 0.00) + 18 (0.00) = 0.00 (lb./lb.-mole)

$$V_s = K_p \, C_p \left[\sqrt{dP} \right] \text{avg.} \sqrt{\frac{T_{s(avg.)}}{P_s \; M_s}}$$

Where:

V_s	=	Average velocity of gas stream in stack, ft./sec.
K_p	=	85.49 ft/sec $\left[(g/g\text{-mole})\text{-}(mm\ Hg) \ / \ (^oK)(\ mm\ H_2O \right]^{1/2}$
C_p	=	Pitot tube coefficient, (dimensionless).
dP	=	Velocity head of stack gas, in. H_2O.
P_{bar}	=	Barometric pressure at measurement site, (in. Hg).
P_g	=	Stack static pressure, (in. Hg).
P_s	=	Absolute stack gas pressure, (in. Hg) = $P_{bar} + P_g$
P_{std}	=	Standard absolute pressure, (29.92 in. Hg).
t_s	=	Stack temperature, (^of).
T_s	=	Absolute stack temperature, (^oR). = 460 + t_s.
M_s	=	Molecular weight of stack gas, wet basis, (lb/lb-mole).

Run 1:

$$V = (85.49)\ (\ .80)\ (\ 0.67) \sqrt{\frac{756}{(29.08)(26.97)}} = 44.99 \text{ ft/sec.}$$

Run 2:

$$V = (85.49)\ (\ .80)\ (\ 0.69) \sqrt{\frac{757}{(29.08)(27.21)}} = 46.16 \text{ ft/sec.}$$

Run 3:

$$V = (85.49)\ (\ .80)\ (\ 0.70) \sqrt{\frac{768}{(29.08)(27.24)}} = 47.14 \text{ ft/sec.}$$

$$V_s = K_p\ C_p \left[\sqrt{dP} \right] \text{avg.} \sqrt{\frac{T_{s(avg.)}}{P_s\ M_s}}$$

Where:

V_s	=	Average velocity of gas stream in stack, ft./sec.
K_p	=	85.49 ft/sec $\left[(g/g\text{-mole})\text{-}(mm\ Hg) \ / \ (^oK)(\ mm\ H_2O \right]^{1/2}$
C_p	=	Pitot tube coefficient, (dimensionless).
dP	=	Velocity head of stack gas, in. H_2O.
P_{bar}	=	Barometric pressure at measurement site, (in. Hg).
P_g	=	Stack static pressure, (in. Hg).
P_s	=	Absolute stack gas pressure, (in. Hg) = $P_{bar} + P_g$
P_{std}	=	Standard absolute pressure, (29.92 in. Hg).
t_s	=	Stack temperature, (^{o}f).
T_s	=	Absolute stack temperature, (^{o}R). = 460 + t_s.
M_s	=	Molecular weight of stack gas, wet basis, (lb/lb-mole).

Run 4:

$$V = (85.49)\ (\ .80)\ (\ 0.76) \sqrt{\frac{750}{(29.08)(27.24)}} = 50.58 \text{ ft/sec.}$$

Run 5:

$$V = (85.49)\ (\ .00)\ (\ 0.00) \sqrt{\frac{0}{(\ .00)(\ 0.00)}} = 0.00 \text{ ft/sec.}$$

Run 6:

$$V = (85.49)\ (\ .00)\ (\ 0.00) \sqrt{\frac{0}{(\ .00)(\ 0.00)}} = 0.00 \text{ ft/sec.}$$

Stack Gas Flow Rate

$$Q_{sd} = 3600 \left[1 - B_{wc} \right] V_s \; A \left[\frac{T_{std}}{T_{stk}} \right] \left[\frac{P_s}{P_{std}} \right]$$

Where:

Q_{sd}	=	Dry volumetric stack gas flow rate corrected to standard conditions, (dscf/hr).
A	=	Cross sectional area of stack, (ft.^{2}).
3600	=	Conversion factor, (sec./hr.).
t_s	=	Stack temperature, (^{o}f).
T_s	=	Absolute stack temperature, (^{o}R).
T_{std}	=	Standard absolute temperature, (528°R).
P_{bar}	=	Barometric pressure at measurement site, (in.Hg.).
P_g	=	Stack static pressure, (in.Hg.).
P_s	=	Absolute stack gas pressure, (in.Hg.); = $P_{bar} + P_g$
P_{std}	=	Standard absolute pressure, (29.92 in.Hg.).

Run 1:

$$Q_{sd}=3600(1-\ .2330\ )(\ 44.99)(\ 13.80)\left[\frac{528}{756}\right]\left[\frac{29.08}{29.92}\right]=\ 1163691.6\ \frac{dscf}{hr}$$

Run 2:

$$Q_{sd}=3600(1-\ .2177\ )(\ 46.16)(\ 13.80)\left[\frac{528}{757}\right]\left[\frac{29.08}{29.92}\right]=\ 1216162.4\ \frac{dscf}{hr}$$

Run 3:

$$Q_{sd}=3600(1-\ .2137\ )(\ 47.14)(\ 13.80)\left[\frac{528}{768}\right]\left[\frac{29.08}{29.92}\right]=\ 1230452.8\ \frac{dscf}{hr}$$

Stack Gas Flow Rate

$$Q_{sd} = 3600 \left[1 - B_{wc} \right] V_s \; A \left[\frac{T_{std}}{T_{stk}} \right] \left[\frac{P_s}{P_{std}} \right]$$

Where:

Q_{sd}	=	Dry volumetric stack gas flow rate corrected to standard conditions, (dscf/hr).
A	=	Cross sectional area of stack, (ft.^{2}).
3600	=	Conversion factor, (sec./hr.).
t_s	=	Stack temperature, (^{o}f).
T_s	=	Absolute stack temperature, (^{o}R).
T_{std}	=	Standard absolute temperature, (528°R).
P_{bar}	=	Barometric pressure at measurement site, (in.Hg.).
P_g	=	Stack static pressure, (in.Hg.).
P_s	=	Absolute stack gas pressure, (in.Hg.); = $P_{bar} + P_g$
P_{std}	=	Standard absolute pressure, (29.92 in.Hg.).

Run 4:

$$Q_{sd}=3600(1-\ .2130\ )(\ 50.58)(\ 13.80)\left[\frac{528}{750}\right]\left[\frac{29.08}{29.92}\right] = 1353133.4\ \frac{dscf}{hr}$$

Run 5:

$$Q_{sd}=3600(1-\ .0000\ )(\ 0.00)(\ .00)\left[\frac{528}{0}\right]\left[\frac{.00}{29.92}\right] = 0.0\ \frac{dscf}{hr}$$

Run 6:

$$Q_{sd}=3600(1-\ .0000\ )(\ 0.00)(\ .00)\left[\frac{528}{0}\right]\left[\frac{.00}{29.92}\right] = 0.0\ \frac{dscf}{hr}$$

$$E = \frac{(C_s)\ (Q_{sd})}{7000\ gr./lb.} = lb. / hr.$$

Where:

E = Emissions rate, lb/hr.

C_s = Concentration of particulate matter in stack gas, dry basis, corrected to standard conditions, gr/dscf.

Q_{sd} = Dry volumetric stack gas flow rate corrected to standard conditions, dscf/hr.

Run 1:

$$E = \frac{(0.0111)\ (1163691.6)}{7000} = 1.85\ lb. / hr.$$

Run 2:

$$E = \frac{(0.0123)\ (1216162.4)}{7000} = 2.14\ lb. / hr.$$

Run 3:

$$E = \frac{(0.0328)\ (1230452.8)}{7000} = 5.77\ lb. / hr.$$

Emissions Rate from Stack

$$E = \frac{(C_s)\ (Q_{sd})}{7000\ gr./lb.} = lb. / hr.$$

Where:

E = Emissions rate, lb/hr.

C_s = Concentration of particulate matter in stack gas, dry basis, corrected to standard conditions, gr/dscf.

Q_{sd} = Dry volumetric stack gas flow rate corrected to standard conditions, dscf/hr.

Run 4:

$$E = \frac{(0.0262)\ (1353133.4)}{7000} = 5.06\ lb. / hr.$$

Run 5:

$$E = \frac{(0.0000)\ (0.0)}{7000} = 0.00\ lb. / hr.$$

Run 6:

$$E = \frac{(0.0000)\ (0.0)}{7000} = 0.00\ lb. / hr.$$

$$I = 100\ T_s \left[\frac{0.002669\ V_{ic} + (V_m / T_m)\ (P_{bar} + dH / 13.6)}{60\ \theta\ V_s\ P_s\ A_n} \right]$$

Where:

I	=	Percent isokinetic sampling.
100	=	Conversion to percent.
T_s	=	Absolute average stack gas temperature, ^oR.
0.002669	=	Conversion factor, Hg - ft^3/ml - ^oR.
V_{ic}	=	Ttl vol of liquid collected in impingers and silica gel, ml.
T_m	=	Absolute average dry gas meter temperature, ^oR.
P_{bar}	=	Barometric pressure at sampling site, (in. Hg).
dH	=	Av pressure differential across the oriface meter, (in.H_2O).
13.6	=	Specific gravity of mercury.
60	=	Conversion seconds to minutes.
θ	=	Total sampling time, minutes.
V_s	=	Stack gas velocity, ft./sec.
P_s	=	Absolute stack gas pressure, in. Hg.
A_n	=	Cross sectional area of nozzle, ft^2.

Run 1:

$$I = (100)(\ 756\ ) \left[\frac{(0.002669)(246.00) + \frac{39.208}{528} \left[29.08 + \frac{1.39}{13.6} \right]}{60\ (\ 60.0\ )\ (\ 44.99\ )\ (\ 29.08\ )\ (\ .000459\ )} \right] = 98.7\%$$

Run 2:

$$I = (100)(\ 757\ ) \left[\frac{(0.002669)(229.00) + \frac{40.140}{532} \left[29.08 + \frac{1.39}{13.6} \right]}{60\ (\ 60.0\ )\ (\ 46.16\ )\ (\ 29.08\ )\ (\ .000459\ )} \right] = 95.9\%$$

Run 3:

$$I = (100)(\ 768\ ) \left[\frac{(0.002669)(228.00) + \frac{41.564}{538} \left[29.08 + \frac{1.48}{13.6} \right]}{60\ (\ 60.0\ )\ (\ 47.14\ )\ (\ 29.08\ )\ (\ .000459\ )} \right] = 97.0\%$$

$$I = 100\ T_s \left[\frac{0.002669\ V_{ic} + (V_m / T_m)\ (P_{bar} + dH / 13.6)}{60\ \theta\ V_s\ P_s\ A_n} \right]$$

Where:

I	=	Percent isokinetic sampling.
100	=	Conversion to percent.
T_s	=	Absolute average stack gas temperature, ^oR.
0.002669	=	Conversion factor, Hg - ft^3/ml - ^oR.
V_{ic}	=	Ttl vol of liquid collected in impingers and silica gel, ml.
T_m	=	Absolute average dry gas meter temperature, ^oR.
P_{bar}	=	Barometric pressure at sampling site, (in. Hg).
dH	=	Av pressure differential across the oriface meter, (in.H_2O).
13.6	=	Specific gravity of mercury.
60	=	Conversion seconds to minutes.
θ	=	Total sampling time, minutes.
V_s	=	Stack gas velocity, ft./sec.
P_s	=	Absolute stack gas pressure, in. Hg.
A_n	=	Cross sectional area of nozzle, ft^2.

Run 4:

$$I = (100)(\ 750\ ) \left[\frac{(0.002669)(246.00) + \frac{43.799}{526} \left[29.08 + \frac{1.66}{13.6} \right]}{60\ (\ 60.0\ )\ (\ 50.58\ )\ (\ 29.08\ )\ (\ .000459\ )} \right] = 95.2\%$$

Run 5:

$$I = (100)(\ 0\ ) \left[\frac{(0.002669)(\ 0.00) + \frac{.000}{0} \left[.00 + \frac{0.00}{13.6} \right]}{60\ (\ .0\ )\ (\ 0.00\ )\ (\ .00\ )\ (\ .000000\ )} \right] = 0.0\%$$

Run 6:

$$I = (100)(\ 0\ ) \left[\frac{(0.002669)(\ 0.00) + \frac{.000}{0} \left[.00 + \frac{0.00}{13.6} \right]}{60\ (\ .0\ )\ (\ 0.00\ )\ (\ .00\ )\ (\ .000000\ )} \right] = 0.0\%$$

VIII. FIELD DATA

RAMCON ENVIRONMENTAL CORPORATION

Plant Hudson Materials

Location Flanders NJ
Operator W.L. Turner
Date 11-3-88
Run No. 1
Sample Box No. 1
Meter Box No. 6468882 C-124
Meter H @ 1.62
C Factor .9998
Pitot Tube Coefficient Cp ~~.85~~ .796

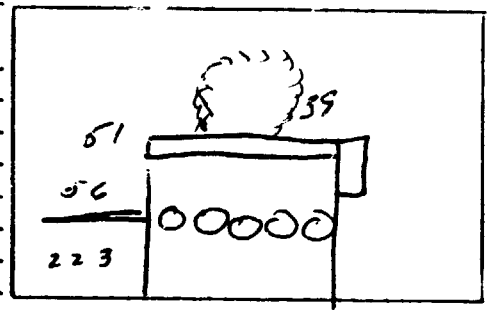

Schematic of Stack Cross Section

Ambient Temperature 45°
Barometric Pressure 29.08
Assumed Moisture, % 25
Probe Length, m(ft) 6'
Nozzle Identification No. .0004587
Avg. Calibrated Nozzle Dia., (in.) .247/.250/.250
Probe Heater Setting 5
Leak Rate, m³/min. (cfm) .011 @ 8" rac
Probe Liner Material glass
Static Pressure, mm Hg (in. Hg) .05
Filter No. GA-3085 4982

	IMPINGER VOLUME, ml	SILICA GEL WEIGHT, g
FINAL	435	523
INITIAL	200	512
DIFFERENCE	235	11

TRAV. PT NO.	SAMPLING TIME (θ) min.	VACUUM in. Hg	STACK TEMP (T_s) °F	VELOCITY HEAD (P_s) in H_2O	PRESSURE DIFF. ORF. MTR in H_2O	GAS SAMPLE VOLUME ft^3	GAS SAMPLE TEMP. AT DRY GAS METER °F Inlet	Outlet	FILTER HOLDER TEMP °F F	L	GAS TEMP LVG CONDENSER OR LAST IMPINGER °F
A) 1	~~9:30~~ 9:32	1	282	.21	.58	~~841:828~~ 842:74	56	48	180 ~~220~~	220 ~~180~~	40
2	9:34	1	285	.18	.5	843:58	58	50	190	220 ~~230~~	40
3	9:36	1	290	.18	.5	844:46	58	50	190	215	40
4	9:38	1	290	.15	.41	845:32	70	50	195	215	40
5	9:40	1	290	.25	.69	846:25	70	50	195	220	40
6	9:42	1	290	.36	.99	847:39	70	52	205	235	40
B) 1	~~9:44~~ 9:46	1	290	.22	.66	848:41	70	52	205	235	40
2	9:48	1	295	.22	.61	849:35	72	52	200	230	40
3	9:50	1	295	.25	.69	850:32	76	52	200	230	40
4	9:52	1	295	.25	.69	851:29	78	52	205 ~~195~~	240	40
5	9:54	2	295	.42	1.2	852:57	80	52	205	240	40
6	9:56	2	295	.42	1.2	854:03	82	54	205	240	40

Form #REC-06

RAMCON emissions test log sheet, cont. DATE 11-3-88 LOCATION Flanders NJ TEST NO. 1

TRAVERSE POINT	SAMPLING TIME θ (min)	VACUUM mm Hg (in. Hg)	STACK TEMP T_s (°F)	VELOCITY HEAD ΔP_s (in. H_2O)	ORFICE DIFF. PRESSURE ΔH (in. H_2O)	GAS VOLUME Vm (ft^3)	GAS SAMPLE TEMP. (°F) in	GAS SAMPLE TEMP. (°F) out	SAMPLE BOX TEMP. (°F)		IMPINGER TEMP (°F)
C) 1	10:00/10:02	1	295	.28	.77	855.11	78	54	205	230	40
2	10:04	1	295	.35	.97	856.14	82	56	200	230	40
3	10:06	2	295	.4	1.1	857.44	82	56	200	235	40
4	10:08	3	295	.57	1.6	858.91	86	56	200	235	40
5	10:10	4	300	.74	2	860.56	86	56	200	235	40
6	10:12	5	300	.84	2.3	862.265	88	56	205	235	42
D) 1	10:14/10:16	1	295	.27	.75	863.29	82	58	205	235	42
2	10:18	1	300	.32	.88	864.43	84	58	205	240	42
3	10:20	4	300	.7	1.9	866.02	86	58	205	240	42
4	10:22	5	305	1	2.8	868.17	90	58	205	240	42
5	10:24	7	305	1.2	3.3	869.99	90	58	200	240	42
6	10:26	7	305	1.1	3	872.07	92	58	200	235	42
E) 1	10:28/10:30	1	295	.27	.75	873.84	84	60	200	235	45
2	10:32	1	300	.3	.83	874.19	86	60	205	230	45
3	10:34	4	300	.6	1.7	875.69	88	60	205	230	45
4	10:36	5	300	1	2.8	877.48	90	60	205	230	45
5	10:38	5	300	1	2.8	879.26	92	60	205	230	45
6	10:40	5	300	1	2.8	881.036	92	60	205	230	45

RAMCON ENVIRONMENTAL CORPORATION

Plant Hudson Materials

Location Flanders N.J.
Operator W.L. Turner
Date 11-3-88
Run No. 2
Sample Box No. 1
Meter Box No. 6046882 C-124
Meter H @ 1.62
C Factor .9996
Pitot Tube Coefficient Cp .896

Ambient Temperature 50
Barometric Pressure 29.08
Assumed Moisture, % 35
Probe Length, m(ft) 6'

	IMPINGER VOLUME, ml	SILICA GEL WEIGHT, g
FINAL	420	525
INITIAL	200	516
DIFFERENCE	220	9

Nozzle Identification No. 0004587
Avg. Calibrated Nozzle Dia., (in.) .290/.290/.290
Probe Heater Setting 5
Leak Rate, m^3/min. (cfm) .004@ 3" vac
Probe Liner Material GLASS
Static Pressure, mm Hg(in.Hg) .05
Filter No. KA-3084 .5302

Schematic of Stack Cross Section

TRAV. PT NO.	SAMPLING TIME (θ)min.	VACUUM in. Hg	STACK TEMP (Ts) °F	VELOCITY HEAD (Ps) in H20	PRESSURE DIFF. ORF. MTR in H20	GAS SAMPLE VOLUME ft^3	GAS SAMPLE TEMP. AT DRY GAS METER °F Inlet	Outlet	FILTER HOLDER TEMP °F	GAS TEMP LVG CONDENSER OR LAST IMPINGER °F
A) 1	11:30 / 11:32	2	285	.3	.83	881.74 / 882.69	70	60	200/225	40
2	11:34	4	285	.37	1.0	885.81	74	60	200/225	40
3	11:36	4	285	.62	1.7	885.26	80	60	200/230	40
4	11:38	4	285	.74 .95	2.6	887.01	84	60	200/230	40
5	11:40	5	290	.9	2.5	888.88	80	60	205/230	40
6	11:42	5	290	.9	2.5	889.41	80	60	205/230	40
B) 1	11:45 / 11:47	5	290	.4	1.1	891.01	80	60	205/230	40
2	11:49	6	295	.61	1.7	893.47	82	60	205/230	40
3	11:51	6	295	.55	1.5	894.91	84	60	200/230	40
4	11:53	6	295	.55	1.5	896.37	86	60	200/230	40
5	11:55	6	300	.95	2.6	898.16	88	60	200/235	40
6	11:57	6	300	.95	2.6	900.015	88	60	205/235	40

-47-

Form #REC-06

RAMCON emissions test log sheet, cont. DATE 11-3-88 LOCATION Fleetwood OS TEST NO. 2

TRAVERSE POINT	SAMPLING TIME θ (min)	VACUUM mm Hg (in. Hg)	STACK TEMP T_s (°F)	VELOCITY HEAD ΔP_s (in. H_2O)	ORFICE DIFF. PRESSURE ΔH (in. H_2O)	GAS VOLUME V_m (ft^3)	GAS SAMPLE TEMP. (°F) in	GAS SAMPLE TEMP. (°F) out	SAMPLE BOX TEMP. (°F)	IMPINGER TEMP (°F)
C) 1	12:00 / 12.02	3	300	.3	.83	901.18	78	60	195/240	40
2	12:04	3	300	.37	1	902.32	82	60	200/240	40
3	12:06	5	300	.45	1.2	903.64	80	60	200/240	42
4	12:08	5	300	.7	1.9	904.56	88	60	200/240	42
5	12.10	6	300	.95	2.5	907.01	90	60	200/240	42
6	12:12	7	300	.95	2.5	908.64	90	60	200/235 ~~240~~	42
D) 1	12.14 / 12.16	2	300	.25	.69	909.67	80	60	200/235	42
2	12:18	2	300	.25	.69	910.65	84	60	205/235	42
3	12:20	2	300	.3	.83	911.74	86	60	205/235	42
4	12:22	3	300	.35	.97	913.04	88	60	210/235	42
5	12:24	5	300	.45	1.2	914.24	88	60	210/240	42
6	12.26	7	300	.7	1.9	915.87	90	60	210/240	42
E) 1	12.27 / 12.29	1	300	.15	.41	916.62	80	60	205/240	42
2	12:31	1	300	.15	.41	917.41	84	60	205/240	42
3	12.33	1	300	.15	.41	918.17	86	60	205/240	42
4	12.35	1	300	.18	.50	919.02	86	62	200/235	42
5	12.37	2	300	.25	.69	920.01	88	62	200/235	42
6	12.39	4	300	.35	.96	921.18	90	62	200/235	42

RAMCON ENVIRONMENTAL CORPORATION

Plant Huron Materials

Location Flanders, NJ.
Operator L.L. Turner
Date 11-3-88
Run No. 3
Sample Box No. 2
Meter Box No. 646882 C-124
Meter H @ 1.62
C Factor .9996
Pitot Tube Coefficient Cp .796

Ambient Temperature 55
Barometric Pressure 29.08
Assumed Moisture, % 25
Probe Length, m(ft) 6'
Nozzle Identification No. CX00487
Avg. Calibrated Nozzle Dia., (in.) .290/.290/.29
Probe Heater Setting 5.0
Leak Rate, m³/min. (cfm) ~~0~~
Probe Liner Material glass
Static Pressure, mm Hg (in. Hg) .05
Filter No. GA-3068 .5037

	IMPINGER VOLUME, ml	SILICA GEL WEIGHT, g
FINAL	440	527
INITIAL	200	519
DIFFERENCE	220	8

Schematic of Stack Cross Section

TRAV. PT NO.	SAMPLING TIME (θ) min.	VACUUM in. Hg	STACK TEMP (T_s) °F	VELOCITY HEAD (P_s) in H_2O	PRESSURE DIFF. ORF. MTR in H_2O	GAS SAMPLE VOLUME ft³	GAS SAMPLE TEMP. AT DRY GAS METER °F Inlet	Outlet	FILTER HOLDER TEMP °F	GAS TEMP LVG CONDENSER OR LAST IMPINGER °F
A) 1	1:32 / 1:34	1	290	.2	.55	921:40 / 922.52	70	66	195/230	40
2	1:36	1	295	.15	.41	923:09	78	64	195/230	40
3	1:38	1	300	.15	.41	923:87	82	64	200/230	40
4	1:40	1	300	.15	.41	924.67	84	64	200/235	40
5	1:42	1	300	.23	.63	925:64	86	64	200/235	40
6	1.44	2	300	.45	1.2	927:00	88	64	200/235	40
B) 1	1:46 / 1.48	1	305	.25	.69	927.99	86	64	205/235	40
2	1.50	1	305	.25	.69	929:01	88	64	205/235	40
3	1.52	1	310	.25	.69	930:00	88	64	200/235	40
4	1.54	2	310	.45	1.2	931:32	90	64	200/235	40
5	1.56	4	310	.6	1.7	932:87	92	64	200/235	40
6	1.58	4	310	.65	1.8	934.64	94	64	200/235	40

Form #REC-06

RAMCON emissions test log sheet, cont. DATE 11-3-88 LOCATION [illegible], NJ TEST NO. 3

TRAVERSE POINT	SAMPLING TIME θ (min)	VACUUM mm Hg (in. Hg)	STACK TEMP T_s (°F)	VELOCITY HEAD ΔP_s (in. H_2O)	ORFICE DIFF. PRESSURE ΔH (in. H_2O)	GAS VOLUME Vm ($ft.^3$)	GAS SAMPLE TEMP. (°F) in	GAS SAMPLE TEMP. (°F) out	SAMPLE BOX TEMP. (°F)	IMPINGER TEMP (°F)
C) 1	2:00 / 2:02	1	305	.3	.83	935.66	90	66	200/235	40
2	2:04	1	305	.4	1.1	936.92	90	66	200/235	40
3	2:06	1	310	.47	1.3	938.26	92	66	205/235	40
4	2:08	3	310	.6	1.7	939.81	94	66	205/235	40
5	2:10	4	310	.75	2.1	941.17	96	66	190/240	40
6	2:12	4	310	.9	2.5	943.275	98	66	195/240	40
D) 1	2:14 / 2:16	1	300	.35	.96	944.46	90	66	200/240	40
2	2:18	2	310	.55	1.5	945.88	92	66	200/240	40
3	2:20	4	310	.85	2.3	947.67	96	66	200/240	40
4	2:22	4	315	.95	2.6	949.51	98	66	200/235	40
5	2:24	4	315	1.1	3	951.52	98	66	200/235	40
6	2:26	4	315	1.9	2.5	953.376	98	66	200/235	40
E) 1	2:28 / 2:30	1	300	.25	.69	954.42	94	66	200/235	40
2	2:32	2	315	.4	1.1	955.54	94	66	200/235	40
3	2:34	2	315	.65	1.8	957.29	94	66	205/235	40
4	2:36	4	315	.85	2.3	959.08	98	66	205/235	40
5	2:38	4	315	1	2.8	961.01	98	66	200/240	40
6	2:40	4	315	1	2.8	962.964	98	66	200/240	40

-150-

RAMCON ENVIRONMENTAL CORPORATION

Plant Hudson Material
Location Flanders NJ
Operator W.L Turner
Date 11-4-88
Run No. 4
Sample Box No. 1
Meter Box No. 6046882 C=124
Meter H @ 1.62
C Factor .9996
Pitot Tube Coefficient Cp .796

Ambient Temperature 45°
Barometric Pressure 29.08
Assumed Moisture, % 25
Probe Length, m(ft) 6'
Nozzle Identification No. 0004587
Avg. Calibrated Nozzle Dia., (in.) .290/.286/.290
Probe Heater Setting 5.0
Leak Rate, m³/min. (cfm) .005@ 8" vac
Probe Liner Material glass
Static Pressure, mm Hg (in.Hg) .05
Filter No. IA 3069 3059

	IMPINGER VOLUME, ml	SILICA GEL WEIGHT, g
FINAL	435	523
INITIAL	200	514
DIFFERENCE	235	11

Schematic of Stack Cross Section

TRAV. PT NO.	SAMPLING TIME (θ)min.	VACUUM in. Hg	STACK TEMP (T_s) °F	VELOCITY HEAD (P_s) in H20	PRESSURE DIFF. ORF. MTR in H_2O	GAS SAMPLE VOLUME ft³	GAS SAMPLE TEMP. AT DRY GAS METER °F Inlet	Outlet	FILTER HOLDER TEMP °F	GAS TEMP LVG CONDENSER OR LAST IMPINGER °F
A) 1	7:28 / 7:30	1	280	.28	.77	963:904 / 964:91	54	46	190/225	40
2	7:32	1	285	.35	.97	966:12	60	46	190/230	40
3	7:34	1	285	.45	1.2	967:38	64	46	195/230	40
4	7:36	2	285	.57	1.6	968:81	68	46	195/230	40
5	7:38	4	285	.7	1.9	970:36	72	46	195/230	40
6	7:40	5	285	.88	2.4	972:43	74	46	200/230	40
B) 1	7:44 / 7:46	1	285	.32	.88	973:21	70	50	200/230	40
2	7:48	1	285	.45	1.2	974:48	74	50	200/230	40
3	7:50	4	290	.65	1.8	976:01	74	50	200/235	40
4	7:52	6	290	1	2.8	977:86	80	50	205/235	40
5	7:54	6	290	1	2.8	979:77	82	50	200/235	40
6	7:56	6	290	1	2.8	981:70	82	52	200/235	40

-5/-

Form #REC-06

RAMCON emissions test log sheet, cont. DATE 11-4-88 LOCATION Flanders NJ TEST NO. 4

TRAVERSE POINT	SAMPLING TIME θ (min)	VACUUM mm Hg (in. Hg)	STACK TEMP T_s (°F)	VELOCITY HEAD ΔP_s (in. H_2O)	ORFICE DIFF. PRESSURE ΔH (in. H_2O)	GAS VOLUME Vm (ft^3)	GAS SAMPLE TEMP. (°F) in	GAS SAMPLE TEMP. (°F) out	SAMPLE BOX TEMP. (°F)	IMPINGER TEMP (°F)
C) 1	~~7:58~~ 8:00	1	280	.25	.69	982:68	78	52	200/240	40
2	8:02	2	290	.4	1.1	983:95	80	54	200/240	40
3	8:04	4	295	.65	1.8	985:47	82	54	200/240	40
4	8:06	5	295	.9	2.5	987:25	86	54	210/240	40
5	8:08	6	295	1	2.8	989:16	86	54	205/240	40
6	8:10	5	295	.85	2.3	990:97	86	56	205/240	40
D) 1	~~8:12~~ 8:14	1	290	.3	.83	992:04	80	56	205/240	40
2	8:16	1	290	.4	1.1	993:28	84	58	205/235	40
3	8:18	2	290	.55	1.5	994:68	84	58	205/235	40
4	8:20	3	295	.6	1.7	996:17	88	58	205/235	40
5	8:22	5	295	.8	2.2	997:87	88	58	205/235	40
6	8:24	4	295	.7	1.9	998.43	90	58	200/235	40
E) 1	~~8:26~~ 8:28	1	285	.35	.97	000:73	82	58	200/235	40
2	8:30	1	290	.4	1.1	1:95	84	58	200/235	40
3	8:32	2	290	.5	1.4	003:39	88	58	205/235	40
4	8:34	2	295	.55	1.5	4:71	88	58	205/235	40
5	8:36	4	295	.6	1.7	6:21	90	58	205/235	40
6	8:38	4	295	.6	1.7	7:703	90	60	205/235	40

Hudson Mathis. -53-

Run # 1	1		2		3		
Collection Method Continuous/Grab GAS	Actual Reading	Net	Actual Reading	Net	Actual Reading	Net	Average Net Volume
CO_2	6.2						
O_2 (Net is actual O_2 reading minus actual CO_2 reading)	17.8						
CO (Net is actual CO reading minus actual O_2 reading)							
N_2 (Net is 100 minus actual CO reading)							

Run # 2	1		2		3		
Collection Method Continuous/Grab GAS	Actual Reading	Net	Actual Reading	Net	Actual Reading	Net	Average Net Volume
CO_2	6.6						
O_2 (Net is actual O_2 reading minus actual CO_2 reading)	17.8						
CO (Net is actual CO reading minus actual O_2 reading)							
N_2 (Net is 100 minus actual CO reading)							

Run # 3	1		2		3		
Collection Method Continuous/Grab GAS	Actual Reading	Net	Actual Reading	Net	Actual Reading	Net	Average Net Volume
CO_2	6.6						
O_2 (Net is actual O_2 reading minus actual CO_2 reading)	17.4						
CO (Net is actual CO reading minus actual O_2 reading)							
N_2 (Net is 100 minus actual CO reading)							

Hudson Mills -54-

Run # 4	1		2		3		
Collection Method Continuous/Grab GAS	Actual Reading	Net	Actual Reading	Net	Actual Reading	Net	Average Net Volume
CO_2	6.5						
O_2 (Net is actual O_2 reading minus actual CO_2 reading)	17.6						
CO (Net is actual CO reading minus actual O_2 reading)							
N_2 (Net is 100 minus actual CO reading)							

Run #	1		2		3		
Collection Method Continuous/Grab GAS	Actual Reading	Net	Actual Reading	Net	Actual Reading	Net	Average Net Volume
CO_2							
O_2 (Net is actual O_2 reading minus actual CO_2 reading)							
CO (Net is actual CO reading minus actual O_2 reading)							
N_2 (Net is 100 minus actual CO reading)							

Run #	1		2		3		
Collection Method Continuous/Grab GAS	Actual Reading	Net	Actual Reading	Net	Actual Reading	Net	Average Net Volume
CO_2							
O_2 (Net is actual O_2 reading minus actual CO_2 reading)							
CO (Net is actual CO reading minus actual O_2 reading)							
N_2 (Net is 100 minus actual CO reading)							

IX. CALIBRATIONS

METER BOX CALIBRATION DATA AND CALCULATION FORM

(English units)

Date 11-8-88 Meter box number 646882 C-124

Barometric pressure, P_b = 30.20 in. Hg Calibrated by [illegible]

Orifice manometer setting (ΔH), in. H_2O	Gas volume: Wet test meter (V_w), ft^3	Gas volume: Dry gas meter (V_d), ft^3	Temperature: Wet test meter (t_w), °F	Temperature: Dry gas meter: Inlet (t_{d_i}), °F	Temperature: Dry gas meter: Outlet (t_{d_o}), °F	Temperature: Dry gas meter: Avg[a] (t_d), °F	Time (Θ), min	Y_i	$\Delta H@_i$ in. H_2O
0.5	5	59.65 / 64.774	69.8	102 / 102	78 / 78	90	12:00	1.012	1.56
1.0	5	52.48 / 57.518	69.8	104 / 104	78 / 78	91	8:42	1.019	1.62
1.5	10	40.44 / 50.583	69.8	104 / 106	76 / 76	90.5	8:59	1.024	1.57
2.0	10	28.97 / 38.903	69.8	100 / 104	72 / 74	87.5	12:16	1.033	1.62
3.0	10								
4.0	10								
							Avg	1.022	1.59

ΔH, in. H_2O	$\frac{\Delta H}{13.6}$	$Y_i = \frac{V_w P_b (t_d + 460)}{V_d (P_b + \frac{\Delta H}{13.6})(t + 460)}$	$\Delta H@_i = \frac{0.0317\ \Delta H}{P_b (t_d + 460)} \left[\frac{(t_w + 460)\ \Theta}{V_w}\right]^2$
0.5	0.0368		
1.0	0.0737		
1.5	0.110		
2.0	0.147		
3.0	0.221		
4.0	0.294		

[a] If there is only one thermometer on the dry gas meter, record the temperature under t_d.

METER BOX CALIBRATION DATA AND CALCULATION FORM

(English units)

Date 10-21-88 Meter box number 646882 C-124

Barometric pressure, P_b = 30.02 in. Hg Calibrated by [illegible]

Orifice manometer setting (ΔH), in. H_2O	Gas volume: Wet test meter (V_w), ft^3	Gas volume: Dry gas meter (V_d), ft^3	Temperature: Wet test meter (t_w), °F	Temperature: Dry gas meter: Inlet (t_{d_i}), °F	Temperature: Dry gas meter: Outlet (t_{d_o}), °F	Temperature: Dry gas meter: Avg[a] (t_d), °F	Time (θ), min	Y_i	$\Delta H@_i$ in. H_2O
0.5	5	607.54 / 612.75	71.6	103 / 104	80 / 80	91.75	12:19	0.9882	1.64
1.0	5	599.98 / 604.24	71.6	105 / 106	80 / 80	92.75	10:24	0.9942	1.62
1.5	10	585.24 / 595.504	71.6	106 / 108	78 / 80	93	14:00	1.009	1.61
2.0	10	576.24 / 587.495	71.6	102 / 106	75 / 78	90.25	13:25	1.007	1.61
3.0	10								
4.0	10								
							Avg	0.9996	1.62

ΔH, in. H_2O	$\frac{\Delta H}{13.6}$	$Y_i = \frac{V_w P_b (t_d + 460)}{V_d (P_b + \frac{\Delta H}{13.6})(t + 460)}$	$\Delta H@_i = \frac{0.0317\ \Delta H}{P_b (t_d + 460)} \left[\frac{(t_w + 460)\ \theta}{V_w}\right]^2$
0.5	0.0368		
1.0	0.0737		
1.5	0.110		
2.0	0.147		
3.0	0.221		
4.0	0.294		

[a] If there is only one thermometer on the dry gas meter, record the temperature under t_d.

Quality Assurance Handbook M4-2.3A (front side)

Form #REC-02

Date 2-10-88 Thermocouple number Inlet/Outlet

Ambient temperature 24 °C Barometric pressure 29.95 in. Hg

Calibrator S. Turner Reference: mercury-in-glass ✓

other _____

Reference point number[a]	Source[b] (specify)	Reference Thermometer Temperature, °C	Thermocouple Potentiometer Temperature, °C	Temperature Difference,[c] %
A	Inlet Ambient	24°C	24°C	0%
B	Outlet Ambient	24°C	24°C	0%
C	Ambient 11-3-88	45°F	45°F	0%

[a]Every 30°C (50°F) for each reference point.

[b]Type of calibration system used.

[c] $\left[\frac{(\text{ref temp, °C} + 273) - (\text{test thermom temp, °C} + 273)}{\text{ref temp, °C} + 273}\right] 100 \leq 1.5\%.$

Figure 2.5 stack temperature sensor calibration data form.

Date 2-10-88 Thermocouple number Hotbox

Ambient temperature 24°C Barometric pressure 29.95 in. Hg

Calibrator S. Turner Reference: mercury-in-glass ✓

other _____

Reference point number[a]	Source[b] (specify)	Reference Thermometer Temperature, °C	Thermocouple Potentiometer Temperature, °C	Temperature Difference,[c] %
A	Boiling Water	100°C	100°C	0%
B	AMBIENT	24°C	24°C	0%
C	AMBIENT 11-3-88	45°F	45°F	0%

[a]Every 30°C (50°F) for each reference point.

[b]Type of calibration system used.

[c] $\left[\frac{(\text{ref temp, °C} + 273) - (\text{test thermom temp, °C} + 273)}{\text{ref temp, °C} + 273}\right] 100 \leq 1.5\%.$

Figure 2.5 stack temperature sensor calibration data form.

RAMCON ENVIRONMENTAL CORPORATION

Lear Siegler Stack Sampler

Nozzle Diameter Calibration

Date _____ Signature _____

Nozzle No.	Average Diameter	Nozzle No.	Average Diameter
1		7	
2		8	
3		9	
4		10	
5		11	
6		12	

Pitot Tube Calibration (S Type)

Pitot Tube Identification No. 62 Date 2-4-88

Calibrated by: Sam T. Thomas

"A" SIDE CALIBRATION

Run No.	Δp std cm H_2O (in. H_2O)	Δp (s) cm H_2O (in. H_2O)	$C_p(s)$	DEVIATION $C_p(s)-\bar{C}_p(A)$
1	0.98	1.55	.795	<.01
2	0.85	1.35	.793	<.01
3	0.64	1.00	.800	<.01
		$\bar{C}_p$ (SIDE A)	.796	

"B" SIDE CALIBRATION

Run No.	Δp std cm H_2O (in. H_2O)	Δp(s) cm H_2O in. H_2O)	$C_p(s)$	DEVIATION $C_p(s)-\bar{C}_p(B)$
1	0.98	1.55	.795	<.01
2	0.85	1.35	.793	<.01
3	0.64	1.00	.800	<.01
		$\bar{C}_p$ (SIDE B)	.796	

$$\text{AVERAGE DEVIATION} = \sigma(\text{A OR B}) = \frac{\sum_{1}^{3} |C_p(s)-\bar{C}_p(\text{A OR B})|}{3} \leftarrow \text{MUST BE} \leq 0.01$$

$$|\bar{C}_p(\text{SIDE A})-\bar{C}_p(\text{SIDE B})| \leftarrow \text{MUST BE} \leq 0.01$$

$$C_p(s) = C_p(std)\sqrt{\frac{\Delta p\ std}{\Delta p_s}}$$

Form No. EED-17-1

Date 2-10-88 Thermocouple number 62

Ambient temperature 55°F ~~°C~~ Barometric pressure 29.85 in. Hg

Calibrator K Allmending Reference: mercury-in-glass ✓

other _____

Reference point number[a]	Source[b] (specify)	Reference Thermometer Temperature, °C	Thermocouple Potentiometer Temperature, °C	Temperature Difference,[c] %
A	ICE WATER	33° F	32° F	.03%
B	BOILING WATER	214°F	212° F	.009%
C	OIL	379°F	377°F	.005%
D	AMBIENT	55°F	55° F	0%
	11-3-88	45° F	45° F	0%

[a]Every 30°C (50°F) for each reference point.

[b]Type of calibration system used.

[c] $\left[\frac{(\text{ref temp, °C} + 273) - (\text{test thermom temp, °C} + 273)}{\text{ref temp, °C} + 273}\right] 100 \leq 1.5\%.$

Figure 2.5 stack temperature sensor calibration data form.

-61-

RAMCON

Lear Siegler Stack Sampler

Heating Probe Calibration

Probe No. 62 Probe Length 6 ft.

Date of Calibration 1/08/87 Signature S. Greenwood

Name of Company to be tested _____

Note: 3 ft. probe - 5 min. warmup
6 ft. probe - 15 min. warmup
10 ft. probe - 30 min. warmup
Calibration flow rate = .75 CFM

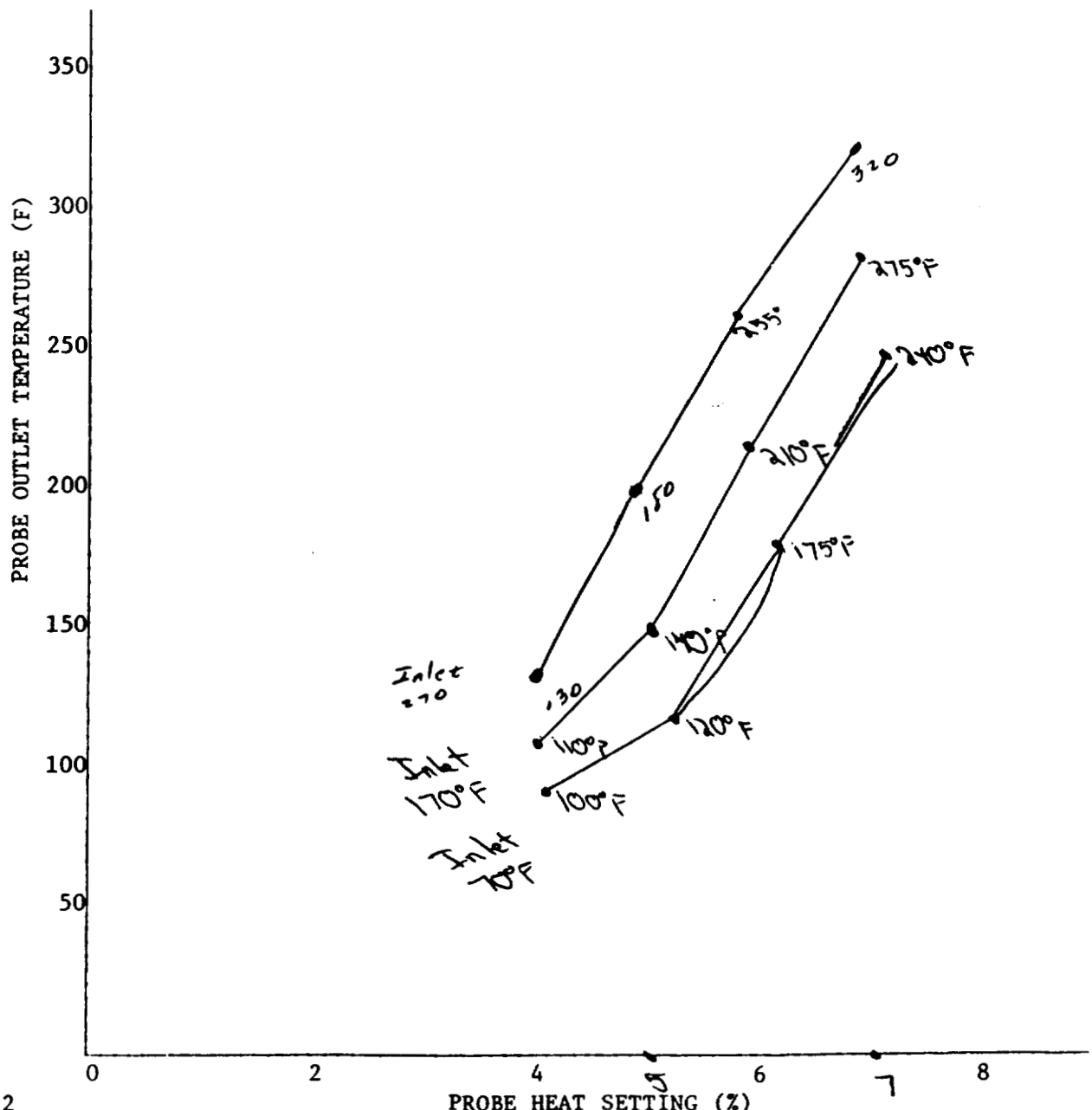

Form No. EED-17-2

X. RAMCON PERSONNEL

RAMCON Environmental Stack Test Team

Sumner Buck - President

Sumner Buck is the President of RAMCON Environmental. He is a graduate of the EPA 450 "Source Sampling for Particulate Pollutants" course and the 474 "Continuous Emissions Monitoring" course all given at RTP. Mr. Buck is a qualified V.E. reader with current certification. Mr. Buck has personally sampled over 400 stacks including over 300 asphalt plants. He is 46 years old and a graduate of the University of Mississippi with graduate studies at Memphis State University and State Technical Institute of Memphis.

Ken Allmendinger - Team Leader

Ken Allmendinger has been employed with RAMCON for three years. He has sampled over 300 asphalt plants with extensive training in Methods 1 through 5. He is qualified as a team leader and has current certification as a V.E. reader.