Note: This is a reference cited in *AP 42, Compilation of Air Pollutant Emission Factors, Volume I Stationary Point and Area Sources.* AP42 is located on the EPA web site at www.epa.gov/ttn/chief/ap42/

The file name refers to the reference number, the AP42 chapter and section. The file name "ref02_c01s02.pdf" would mean the reference is from AP42 chapter 1 section 2. The reference may be from a previous version of the section and no longer cited. The primary source should always be checked.

Source Test Report For
Popejoy Construction Co., Inc.
P.O. Box 365
Ulysses, KS 67880

Scrubber ~~Exaust~~ Stack
Recycle Asphalt Plant
June 22, 1984

Report Prepared by
Turner Engineering, Inc.
4747 Irving Blvd., #206
Dallas, TX 75247
Project #W-1507-84
Report Issued July 9 , 1984

Support for
Bo-Mac Contractors
C-9633

[illegible]

[illegible]

[illegible] contained in this report is [illegible]
and accurate.

[illegible] Armstrong
Vice-President

Thomas K. Turner
President

STATE OF TEXAS
THOMAS K. TURNER
48497
REGISTERED
PROFESSIONAL ENGINEER

TABLE OF CONTENTS

	PAGE
I. INTRODUCTION	1
II. SUMMARY	2-3
III. PROCESS OPERATIONS	4-5
IV. PROCEDURES	6-10
V. APPENDICES	
A- CALCULATION SUMMARIES	11-18
B- ANNUAL TOTAL EMISSIONS	19-24
C- FIELD DATA SHEETS	25-27
D- PROCESS OPERATIONAL DATA SHEETS	28-36
E- SAMPLING EQUIPMENT CALIBRATIONS	37-45
F- SAMPLING EQUIPMENT LITERATURE	46-47
G- OPACITY OBSERVATIONS	48-49
H- DETAILED PROCEDURES	

I. Introduction

A series of tests were conducted at the Popejoy Construction [illegible]

[illegible]

P.O. Box 307

Ulysses, Kansas

67880

(316) 356-[illegible]

[illegible]

[illegible]

Testing was [illegible]

Turner Engineering Inc.

[illegible]

Dallas, TX 75247

Present through the testing were:

Tom Armstrong

Turner Engineering Inc.

Don Popejoy

Popejoy Construction Company, Inc.

Jon M. Rueck P.E.

State of Kansas Department of Health and Environment Bureau of Air Quality

Lynn Apperson

Kansas Health and Environment

Bureau of Air Quality

Testing was conducted over a 8 hr. period. All testing was conducted by Tom Armstrong. Process weight rates and operating parameters were recorded by Popejoy personnel.

Summary

Testing was conducted at the Forest Conservation Facility, [illegible] Glen of Flyers, [illegible] CO, [illegible]

Testing was performed [illegible] Code of Federal Regulations [illegible] Vol.46, No.191, September 30, 1981.

[illegible] Table 1. [illegible] [illegible]

Errors in testing are discussed [illegible] [illegible]

SUMMARY OF EMISSION TEST DATA

TABLE: 1

PLANT: Popejoy Construction Company, Inc.

OPERATOR: Tom Armstrong

LOCATION: Scrubber Exhaust; Asphalt Recycle Plant

REPETITION #:	1	2	3
TEST DATA:	6/22/84		
STACK GAS			
Temperature, average °F	160.7	154.6	159.7
Velocity, average fps	23.03	20.49	21.51
Volume flow x 10^6 scfh db	1.397	1.277	1.342
x 10^3 acfm	41.46	38.57	38.94
Moisture %	26.29	23.85	23.66
SAMPLE			
Time, hrs:min.	1:15	1:15	1:15
Volume, scf db	38.54	38.90	41.16
Particulate Collected mg	50.19	31.47	59.87
Isokinetics %	91.59	101.14	101.79
PARTICULATE			
Concentration gr/scf db	0.02009	0.01248	0.02245
x 10^{-6} lbs/scf db	2.871	1.784	3.207
Emissions lbs/hr	4.012	2.278	4.305

PROCESS OPERATIONS

The Popejoy Construction Company facility west of Ulysses, Kansas consists of Aztec TD-RM #427 asphalt recycle plant. The rated capacity of this unit is 225 tons/hr with an moisture content, normal operation is approximately 250 tons/hr of 2.45% moisture content in feed. Fuel used during testing was #5 oil.

Air pollution control device consists of a venturi scrubber run at approximately 17 inches of water pressure drop across the venturi.

A process flow diagram is shown in Figure 1.

Figure 1

Process Flow Diagram

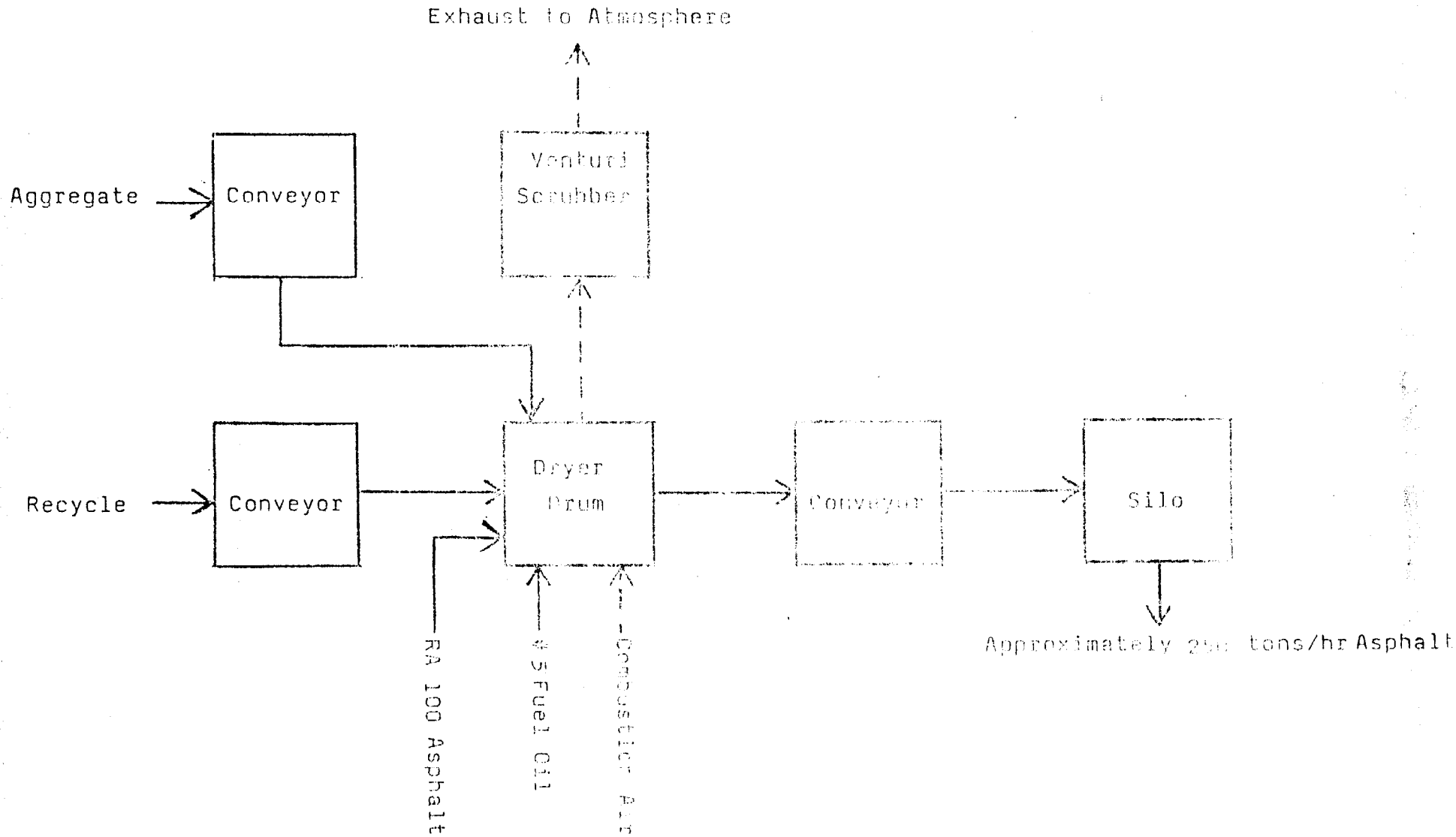

PROCEDURES

The procedure for particulate emission testing followed USEPA Methods as outlined in Subpart I and in Appendix A of Title 40 Part 60 of Federal Regulations. The following Methods were used.

Method #	Title
1	Sample and Velocity Traverses for Stationary Sources
2	Determination of Stack Gas Velocity (Type S. Pilot Tube)
3	Gas Analysis for Carbon Dioxide, Excess Air, and Dry Molecular Weight
4	Determination of Moisture in Stack Gases
5	Determination of Particulate Emissions from Stationary Sources

A diagram of stack dimensions and test port location is shown in Figure 2.

Equipment used was NAPP. Inc. Model 31 Method 5 sampling train. A schematic and related literature are included in Appendix F.

The following deviations were made from published methodology:

1. Barometric pressure readings were taken to the nearest hundredth of an inch, rather than the nearest tenth of an inch required by Method 2. These readings were converted to standard conditions using Table 2 and Table 3. This number was then rounded to the nearest tenth and used in all calculations. Barometric pressure reading is recorded erroneously on the field data sheet for repetition #3. This reading should be 26.9.

2. Pitot tube co-efficient was determined using a standard pitot tube. This pitot tube meets requirements of Method 2 as shown in Figure 2-4. Thus, a co-efficient of 1 is assigned to the standard pitot.

3. Temperatures on the silica gel impinger exhaust exceeded the 68°F minimum specified in paragraph 2.2.5 of Method 5. A resonable amount of silica gel had not turned pink for all three runs, and it is suggested that the higher exhaust gas temperature was caused by the high ambient temperatures heating the fourth impinger outlet assembly.

4. Finish times are not recorded on the field data sheets for Run #2 and Run #3. No interruptions occured during the fifth traverse of each repetition, therefore, finish times are exactly 15 minutes after the recorded time on the fifth port, ie 2:48 on Run #2 and 5:45 on Run #3

Collected samples were black filters, Probe washes appeared clear, but had a slight dark cast, and small pieces of glass [illegible] were white and of a milky appearance. The following analytical procedures were followed:

1. The filter was desicated for 24 hrs, weighed, desicated for another 24 hrs, and weighed. Anhydrous Calcium sulfate was used as a desicant.

2. Probe washes were measured volumetrically to 1 ml, poured into a tared beaker, and evaporated to dryness at 130°F. Samples were then desicated 24 hrs, weighed, desicated 24 hrs, and weighed. The pieces of glass were weighed with the sample.

3. Impinger solutions treated the same as the probe washes.

4. Water and acetone blanks were treated the same as the probe washes.

The results of the impinger analyses yields the following sample weights and emission rates for condensible particulates;

Run#	Sample Weight mg	Concentration gr/scf	Emission Rate lbs/hr
1	58.86	0.02357	4.705
2	87.97	0.03489	6.368
3	55.996	0.02099	4.026

Table 2

TEMPERATURE CORRECTION, English Units [Ref. 2, 3]

To reduce the reading of the barometer to standard temperature

Temperature °F	Multiplier for Correction [a]	Observed Barometer Reading in Inches														
		16"	18"	20"	21"	22"	23"	24"	25"	26"	27"	28"	29"	30"	31"	32"
		ALL CORRECTIONS SUBTRACTIVE														
30	-.000124	.002	.002	.002	.003	.003	.003	.003	.003	.003	.003	.003	.004	.004	.004	[illegible]
32	.000123	.006	.006	.006	.006	.007	.007	.007	.008	[illegible]	.008	.008	.008	.008	.009	[illegible]
34	.000488	.008	.009	.010	.010	.011	.011	.012	.012	.013	.013	.014	.014	.015	.015	.016
36	.000669	.011	.012	.013	.014	.015	.015	.016	.017	.017	.018	.019	.019	.020	.021	.021
38	.000850	.014	.015	.017	.018	.019	.020	.020	.021	.022	.023	.024	.025	.026	.026	.027
40	-.001032	.017	.019	.021	.022	.023	.024	.025	.026	.027	.028	.029	.030	.031	.032	.033
42	.001213	.019	.022	.024	.025	.027	.028	.029	.030	.032	[illegible]	[illegible]	.036	.037	.038	[illegible]
44	.001394	.022	.025	.028	.029	.031	.032	.033	.035	.036	.038	.039	.040	.042	.043	.045
46	.001575	.025	.028	.031	.033	.035	.036	.038	.039	.041	.043	.044	.046	.047	.048	[illegible]
48	.001756	.028	.032	.035	.037	.039	.040	.042	.044	.046	.047	.049	.051	.052	.054	[illegible]
50	-.001937	.031	.035	.038	.041	.043	.045	.046	.048	.050	.052	.054	.056	.058	.059	[illegible]
52	.002118	.034	.038	.042	.044	.047	.049	.051	.054	[illegible]	.057	.061	.061	.064	.066	[illegible]
54	.002298	.037	.041	.045	.048	.051	.053	.056	.057	[illegible]	.062	.064	.067	.069	[illegible]	[illegible]
56	.002479	.040	.045	.050	.052	.055	.057	.059	.061	.061	.067	.069	.072	.074	.077	.078
58	.002660	.043	.048	.052	.056	.059	.061	.064	.066	.069	.072	.074	.077	.080	.082	[illegible]
60	-.002840	.046	.051	.057	.060	.063	.066	.069	.071	.074	.077	.081	.083	.086	[illegible]	[illegible]
62	.003021	.049	.054	.059	.063	.066	.069	.073	.076	.079	.081	.083	.086	.089	[illegible]	[illegible]
64	.003201	.051	.058	.064	.067	.070	.074	.077	.080	.083	.086	.089	.093	.096	.098	[illegible]
66	.003382	.054	.061	.069	.071	.074	.078	.081	.083	.086	.091	.093	.096	.101	.103	[illegible]
68	.003562	.057	.064	.071	.075	.078	.082	.085	.088	.093	.096	.100	.103	.107	.110	[illegible]
70	-.003742	.060	.067	.075	.079	.082	.086	.090	.094	.097	.101	.105	.109	.112	.116	[illegible]
72	.003922	.063	.071	.078	.082	.086	.090	.094	.098	.102	.106	.110	.114	.118	.122	[illegible]
74	.004102	.066	.074	.082	.086	.089	.094	.098	.103	.107	.111	.115	.119	.123	.127	[illegible]
76	.004282	.069	.077	.086	.090	.094	.099	.103	.107	.111	.116	.120	.124	.128	[illegible]	[illegible]
78	.004462	.071	.080	.089	.094	.098	.103	.107	.112	.116	.120	.125	.129	.134	.138	[illegible]
80	-.004642	.074	.084	.093	.097	.102	.107	.111	.116	.121	.125	.130	.135	.139	.144	[illegible]
82	.004822	.077	.087	.093	.101	.106	.111	.116	.121	.125	.130	.135	.140	.145	.149	.154
84	.005001	.080	.090	.100	.105	.110	.115	.120	.125	.130	.135	.140	.145	.150	.155	.160
86	.005181	.083	.093	.104	.109	.114	.119	.124	.130	.135	.140	.145	.150	.155	.161	.166
88	.005360	.086	.096	.107	.113	.118	.123	.129	.134	.139	.145	.150	.155	.161	.166	.172
90	-.005540	.089	.100	.111	.116	.122	.127	.133	.138	.144	.150	.155	.161	.166	.172	.177
92	.005719	.092	.103	.114	.120	.126	.132	.137	.143	.149	.154	.160	.166	.172	.177	.183
94	.005899	.094	.106	.118	.124	.130	.136	.142	.147	.153	.159	.165	.171	.177	.183	.189
96	.006078	.097	.109	.122	.128	.134	.140	.146	.152	.158	.164	.170	.176	.182	.188	.194
98	.006257	.100	.113	.125	.131	.138	.144	.150	.156	.163	.169	.175	.181	.188	.194	.200
100	-.006436	.103	.116	.129	.135	.142	.148	.154	.161	.167	.174	.180	.187	.193	.200	.206
102	.006615	.106	.119	.132	.139	.146	.152	.159	.165	.172	.179	.185	.192	.198	.205	.212
104	.006794	.109	.122	.136	.143	.149	.156	.163	.170	.177	.183	.190	.197	.204	.211	.217
106	.006973	.112	.126	.139	.146	.153	.160	.167	.174	.181	.188	.195	.202	.209	.216	.223
108	.007152	.114	.129	.143	.150	.157	.164	.172	.179	.186	.193	.200	.207	.215	.222	.229
110	-.007331	.117	.132	.147	.154	.161	.169	.176	.183	.191	.198	.205	.213	.220	.227	.235
112	.007509	.120	.135	.150	.158	.165	.173	.180	.188	.195	.203	.210	.218	.225	.233	.240
114	.007688	.123	.138	.154	.161	.169	.177	.185	.192	.200	.208	.215	.223	.231	.238	.246
116	.007866	.126	.142	.157	.165	.173	.181	.189	.197	.205	.212	.220	.228	.236	.244	.252
118	.008045	.129	.145	.161	.169	.177	.185	.193	.201	.209	.217	.225	.233	.241	.249	.257

a. *Multiply the observed barometer reading by the appropriate multiplier, interpolated vertically as required, to obtain the temperature correction in the English system accurately, without horizontal interpolation in the tables.*

Table 3

GRAVITY CORRECTION[Ref. 2, 3]

To reduce the reading of the barometer to standard gravity

Latitude N or S	Multiplier for Correction[a]	Temperature Corrected Barometer Reading: Inches 15	25	30	33	Millimetres or Millibars[c] 400	500	600	700	800	900	1000	1100
		LATITUDE 0° TO 45° — THE CORRECTION IS TO BE SUBTRACTED LATITUDE 46° TO 90° — THE CORRECTION IS TO BE ADDED											
90°	+.002593	+.039	+.065	+.078	+.083	+1.04	+1.30	+1.56	+1.82	+2.07	+2.33	+2.59	+2.85
85	.002553	.038	.064	.077	.082	1.02	1.28	1.53	1.79	2.04	2.30	2.55	2.81
80	.002433	.037	.061	.073	.078	.97	1.22	1.46	1.70	1.95	2.19	2.43	2.68
75	.002238	.034	.056	.067	.072	.90	1.12	1.34	1.57	1.79	2.01	2.24	2.46
70	+.001974	+.030	+.049	+.059	+.063	+0.79	+0.99	+1.18	+1.38	+1.58	+1.78	+1.97	+2.17
68	.001850	.028	.046	.056	.059	.74	.93	1.11	1.30	1.48	1.67	1.85	2.04
66	.001717	.026	.043	.052	.055	.69	.86	1.03	1.20	1.37	1.55	1.72	1.89
64	.001576	.024	.039	.047	.050	.63	.79	.94	1.10	1.26	1.42	1.58	1.73
62	.001427	.021	.036	.043	.046	.57	.71	.86	1.00	1.14	1.29	1.43	1.57
60	+.001270	+.019	+.032	+.038	+.041	+0.51	+0.64	+0.76	+0.89	+1.02	+1.14	+1.27	+1.40
58	.001107	.017	.028	.033	.036	.44	.55	.66	.77	.88	1.00	1.11	1.22
56	.000938	.014	.024	.028	.030	.38	.47	.56	.66	.75	.84	.94	1.03
54	.000766	.011	.019	.023	.024	.31	.38	.46	.53	.61	.68	.77	.84
52	.000588	.009	.015	.018	.019	.24	.29	.35	.41	.47	.53	.59	.65
50	+.000406	+.006	+.010	+.012	+.013	+0.16	+0.20	+0.24	+0.28	+0.33	+0.37	+0.41	+0.45
49	.000317	.005	.008	.010	.010	.13	.16	.19	.22	.25	.29	.32	.35
48	.000228	.003	.006	.007	.007	.09	.11	.14	.15	.18	.20	.23	.25
47	.000134	.002	.003	.004	.004	.05	.07	.08	.09	.11	.12	.13	.15
46	+.000042	+.001	+.001	+.001	+.001	+0.02	+0.02	+0.03	+0.03	+0.04	+0.04	+0.04	+0.05
45	-.000050	-.001	-.001	-.001	-.002	-0.02	-0.02	-0.03	-0.03	-0.04	-0.04	-0.05	-0.05
44	.000142	.002	.004	.004	.005	.06	.07	.09	.10	.11	.13	.14	[illegible]
43	.000231	.004	.006	.007	.007	.09	.12	.14	.16	.18	.21	.23	.26
42	.000318	.005	.008	.010	.010	.13	.16	.20	.23	.26	.29	.33	.36
41	.000417	.006	.010	.013	.013	.17	.21	.25	.29	.33	.38	.42	.46
40	-.000508	-.008	-.013	-.015	-.016	-0.20	-0.25	-0.30	-0.36	-0.41	-0.46	-0.51	-0.56
39	.000598	.009	.015	.018	.019	.24	.30	.36	.42	.48	.54	.60	.66
38	.000686	.010	.017	.021	.022	.28	.34	.41	.48	.55	.62	.69	.76
37	.000776	.012	.019	.023	.025	.31	.39	.47	.54	.62	.70	.78	.93
36	.000864	.013	.022	.026	.028	.35	.43	.52	.61	.69	.78	.86	.95
35	-.000951	-.014	-.024	-.029	-.030	-0.38	-0.48	-0.57	-0.67	-0.76	-0.86	-0.95	-1.05
34	.001037	.016	.026	.031	.033	.41	.52	.62	.73	.83	.93	1.04	1.14
33	.001122	.017	.028	.034	.036	.45	.56	.67	.79	.90	1.01	1.12	1.23
32	.001205	.018	.030	.036	.039	.48	.60	.72	.84	.96	1.08	1.20	1.33
31	.001287	.019	.032	.039	.041	.51	.64	.77	.90	1.03	1.16	1.29	1.42
30	-.001367	-.021	-.034	-.041	-.044	-0.55	-0.68	-0.82	-0.96	-1.09	-1.23	-1.37	-1.50
28	.001523	.023	.038	.046	.049	.61	.76	.91	1.07	1.22	1.37	1.52	1.68
26	.001671	.025	.042	.050	.053	.67	.84	1.00	1.17	1.34	1.50	1.67	1.84
24	.001812	.027	.045	.054	.058	.72	.91	1.09	1.27	1.45	1.63	1.81	1.99
22	.001944	.029	.049	.058	.062	.78	.97	1.17	1.36	1.56	1.75	1.94	2.14
20	-.002067	-.031	-.052	-.062	-.066	-0.83	-1.03	-1.24	-1.45	-1.65	-1.86	-2.07	-2.27
18	.002180	.033	.054	.065	.070	.87	1.09	1.31	1.53	1.74	1.96	2.18	2.40
16	.002282	.034	.057	.068	.073	.91	1.14	1.37	1.60	1.83	2.05	2.28	2.51
14	.002374	.036	.059	.071	.076	.95	1.19	1.42	1.66	1.90	2.14	2.37	2.61
12	.002454	.037	.061	.074	.079	.98	1.23	1.47	1.72	1.96	2.21	2.45	2.70
10	-.002523	-.038	-.063	-.076	-.081	-1.01	-1.26	-1.51	-1.77	-2.02	-2.27	-2.52	-2.78
5	.002641	.040	.066	.079	.085	1.06	1.32	1.58	1.85	2.11	2.38	2.64	2.91
0	.002681	.040	.067	.080	.086	1.07	1.34	1.61	1.88	2.14	2.41	2.68	2.95

Multiply the temperature corrected barometer reading by the appropriate multiplier, interpolated vertically as required, to obtain the gravity correction accurately, without horizontal interpolation in the tables.

Figure 2

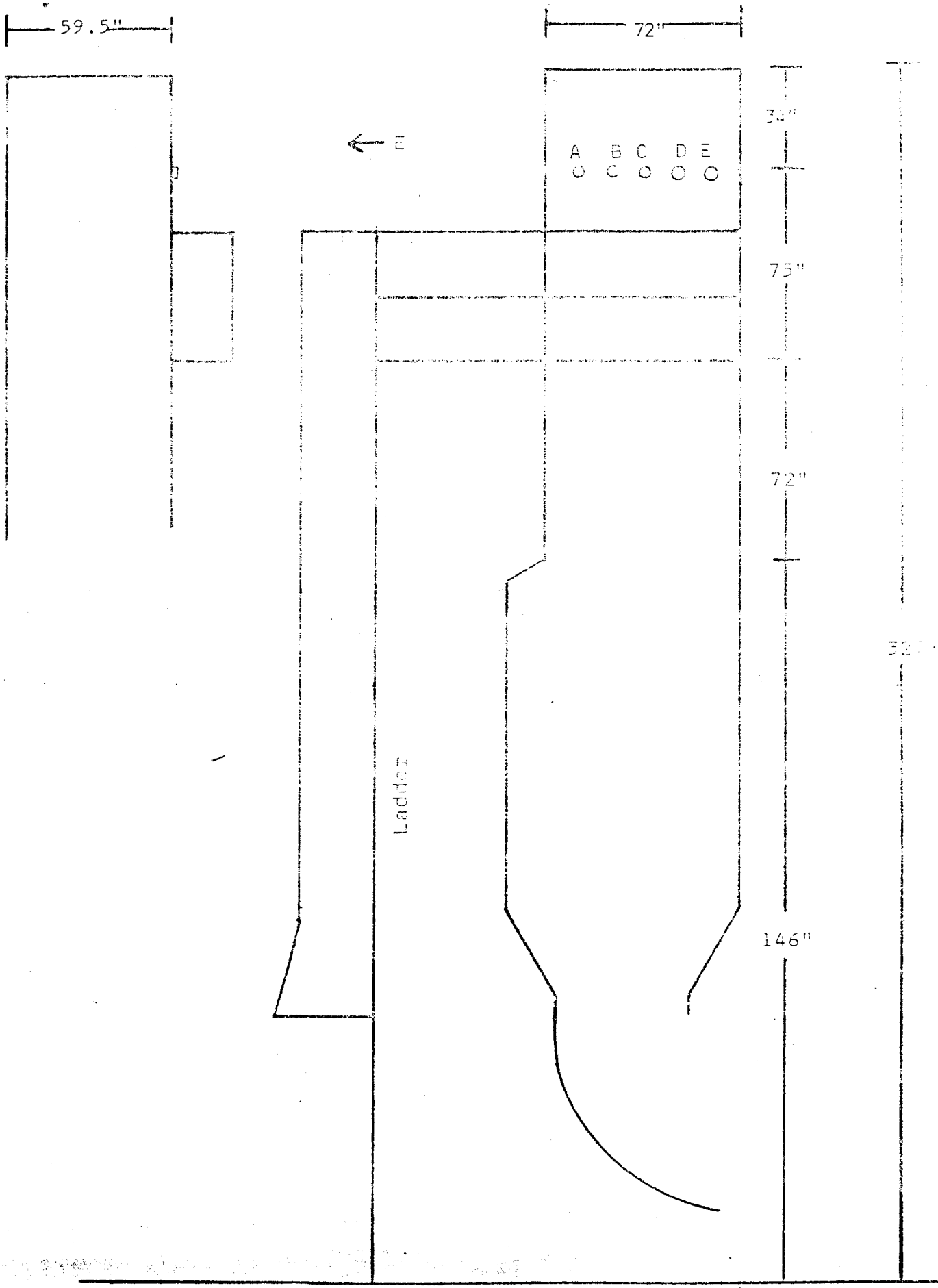

APPENDIX A

POPEJOY CONSTRUCTION
SCRUBBER EXHAUST
6/22/84
REPETITION # 1

SAMPLE VOLUME, STANDARD CUBIC FEET
(((H/13.6) + PBAR) / TM) * Y * VM * 17.64 = 38.5431232

VOLUME OF WATER VAPOR, STANDARD CUBIC FEET
VLC * 0.04704 = 13.74444

FRACTIONAL MOISTURE CONTENT
VWSTD / (VMSTD + VWSTD) =.0428612498

PARTICULATE CONCENTRATION, GR/SCF DB
(MN / VMSTD) * 0.0154 = [illegible]

PARTICULATE CONCENTRATION, LBS/SCF DB
(MN / VMSTD) * 2.205 X 10-4 = [illegible]

MOLECULAR WEIGHT OF STACK GAS, DRY BASIS
(CO2 * .44) + (O2 * .32) + ((N2 + CO) * .28) = 29.295

MOLECULAR WEIGHT OF STACK GAS, WET BASIS
(MD * (1 - BWS)) + (18 * BWS) = 26.3281795

STACK PRESSURE, INCHES OF MERCURY
(SP / 13.6) + PBAR =26.7946529

STACK GAS VELOCITY, FPS
(SQR(((TS + 460) / MS) / PS)) * CP * DP * 85.49 = 23.2275076

STACK GAS VOLUME, ACFM
V * AS * 60 = 41441.1015

STACK GAS VOLUME, SCFM
(((528 * PBAR) / (TS + 460) / 29.92) * AS * V * 3600 = 1397223.8

PARTICULATE EMISSIONS, LBS/HR
CS * QS = 4.01185139

ISOKINETIC RATIO, %
((VMSTD/17.64)+(.002669*VLC))/AN/V/PS/T*(TS+460)*1.667 = 91.5813116

EXCESS AIR = 144.968412

POPEJOY CONSTRUCTION
SCRUBBER EXHAUST
6/22/84
REPETITION # 1

PRESSURE DROP ACROSS METER ORIFICE, H = 1.24
METER CO-EFFICIENT, Y = 1.012
METER TEMPERATURE, TM = 103.3
BAROMETRIC PRESSURE, PBAR = 26.8
GAS METER VOLUME, VM = 45.227
LIQUID COLLECTED, VLC = 292
PARTICULATE SAMPLE WEIGHT, MN = 50.19
STATIC PRESSURE, IN H2O, SP = -.07
STACK TEMPERATURE, TS = 160.7
PITOT TUBE CO-EFFICIENT, CP = .81
SQUARE ROOT OF DELTA P, DP = .3576
AREA OF STACK, AS = 29.75
TEST DURATION, T = 75
AREA OF NOZZLE, AN = 7.17500178E-04

POPEJOY CONSTRUCTION
SCRUBBER EXHAUST
6/22/84
REPETITION # 2

SAMPLE VOLUME, STANDARD CUBIC FEET
(((H/13.6) + PBAR) / TM) * Y * VM * 17.64 = 38.903532

VOLUME OF WATER VAPOR, STANDARD CUBIC FEET
VLC * 0.04704 = 12.19113

FRACTIONAL MOISTURE CONTENT
VWSTD / (VMSTD + VWSTD) =.238898897

PARTICULATE CONCENTRATION, GR/DSCF DS
(MN / VMSTD) * 0.01543 = .012481697

PARTICULATE CONCENTRATION, LBS/DSCF DS
(MN / VMSTD) * 2.205 X 10-6 = 1.763677332E-06

MOLECULAR WEIGHT OF STACK GAS, DRY BASIS
(CO2 * .44) + (O2 * .32) + ((N2 + CO) * .28) = 29.438

MOLECULAR WEIGHT OF STACK GAS, WET BASIS
(MD * (1 - BWS)) + (18 * BWS) = 26.7089058

STACK PRESSURE, INCHES OF MERCURY
(SP / 13.6) + PBAR =26.7955882

STACK GAS VELOCITY, FPS
(SQR(((TS + 460) / MS) / PS)) * CP * DP * 85.49 = 20.4837738

STACK GAS VOLUME, ACFM
V * AS * 60 = 36572.4613

STACK GAS VOLUME, SCFH
(((528 * PBAR) / (TS + 460) / 29.92) * AS * V * 3600 = 1276955.5

PARTICULATE EMISSIONS, LBS/HR
CS * QS = 2.27767664

ISOKINETIC RATIO, %
((VMSTD/17.64)+(.002669*VLC))/AN/V/PS/T*(TS+460)*1.667 = 101.140422

EXCESS AIR = 139.562297

POPEJOY CONSTRUCTION
SCRUBBER EXHAUST
6/22/84
REPETITION # 3

SAMPLE VOLUME, STANDARD CUBIC FEET
(((H/13.6) + PBAR) / TM) * Y * VM * 17.64 = 41.1568804

VOLUME OF WATER VAPOR, STANDARD CUBIC FEET
VLC * 0.04704 = 12.75397

FRACTIONAL MOISTURE CONTENT
VWSTD / (VMSTD + VWSTD) =.236803817

PARTICULATE CONCENTRATION, GR/SCF DS
(MN / VMSTD) * 0.01543 = .022486794

PARTICULATE CONCENTRATION, LBS/SCF DS
(MN / VMSTD) * 2.205 X 10-6 = 3.21756450E-06

MOLECULAR WEIGHT OF STACK GAS, DRY BASIS
(CO2 * .44) + (O2 * .32) + ((N2 + CO) * .28) = 29.32

MOLECULAR WEIGHT OF STACK GAS, WET BASIS
(MD * (1 - BWS)) + (18 * BWS) = 26.4916482

STACK PRESSURE, INCHES OF MERCURY
(SP / 13.6) + PBAR =26.7976471

STACK GAS VELOCITY, FPS
(SQR(((TS + 460) / MS) / PS)) * CP * DP * 85.49 = 21.5073736

STACK GAS VOLUME, ACFM
V * AS * 60 = 38394.2355

STACK GAS VOLUME, SCFH
(((528 * PBAR) / (TS + 460) / 29.92) * AS * V * 3600 = 1342125.29

PARTICULATE EMISSIONS, LBS/HR
CS * QS = 4.30495349

ISOKINETIC RATIO, %
((VMSTD/17.64)+(.002669*VLC))/AN/V/PS/T*(TS+460)*1.667 = 101.795202

EXCESS AIR = 171.517934

POPEJOY CONSTRUCTION
SCRUBBER EXHAUST
6/22/84
REPETITION # 3

PRESSURE DROP ACROSS METER ORIFICE, H = 1.848
METER CO-EFFICIENT, Y = 1.012
METER TEMPERATURE, TM = 115.95
BAROMETRIC PRESSURE, PBAR = 26.8
GAS METER VOLUME, VM = 49.337
LIQUID COLLECTED, VLC = 271
PARTICULATE SAMPLE WEIGHT, MN = 59.87
STATIC PRESSURE, IN H2O, SP = -.032
STACK TEMPERATURE, TS = 159.7
PITOT TUBE CO-EFFICIENT, CP = .81
SQUARE ROOT OF DELTA P, DP = .3334
AREA OF STACK, AS = 29.78
TEST DURATION, T = 75
AREA OF NOZZLE, AN = 7.17[illegible]E-04

APPENDIX B

ACETONE BLANK ANALYTICAL DATA FORM

Plant: Pepejoy Construction

Sample Location: Scrubber Exhaust

Liquid Level Marked? ✓

Blank Volume (Pa): 100 ml

Date of Weighing 6/28/84 Gross Weight 105.8257

Date of Weighing 6/28/84 Gross Weight 105.8257

Average Gross Weight 105.8257

Tare Weight 105.8244

Weight of Blank (mg) 0.7

$$Ca = \frac{mg}{Va \cdot Sg} = 0.009 \text{ mg/g}$$

Note: In no case should a blank residue greater than 0.01 mg/g or 0.001% of the blank weight be subtracted from the sample weight.

PARTICULATE ANALYTICAL DATA FORM

Company: Pepsico Cont. Run Number: 1

Location: Scrubber Exhaust Acetone Density(Pa): .7857

Date: 6/24/84

Liquid Level Marked? ✓

Acetone Blank Concentration(Ca) .009

Acetone Rinse Volume(Vaw) 228

Residue in Rinse (ba) = Ca·Vaw·Pa 1.61

Date of Weighing 6/26/84 Gross Wt. 111804.5

Date of Weighing 6/27/84 Gross Wt. 111804.1

Average Gross Wt. 111804.3

Less Blank Residue (ba) 1.61

Tare Wt. 111778.1

Weight of Particulate in Acetone Rinse 24.59

Date of Weighing 6/26/84 Gross Filter Weight 440.4

Date of Weighing 6/27/84 Gross Filter Weight 441.4

Average Gross Wt. 440.4

Filter Tare Wt. 412.8

Weight of Particulate on Filter 25.6

Total Weight of Particulate 50.19

PARTICULATE ANALYTICAL DATA FORM

Company: Peggy Construction Run Number: 2

Location: Smelting Furnace Acetone Density(Pa): .7857

Date: 6/24/84

Liquid Level Marked? ✓

Acetone Blank Concentration(Ca) .009

Acetone Rinse Volume(Vaw) 2.58

Resicue in Rinse (Wa) = Ca·Vaw·Pa 1.82

Date of Weighing 6/26/84 Gross Wt. 115262.5

Date of Weighing 6/28/84 Gross Wt. 115262.5

Average Gross Wt. 115262.5

Less Blank Residue (Wa) 1.82

Tare Wt. 115249.2

Weight of Particulate in Acetone Rinse 11.47

Date of Weighing 6/26/84 Gross Filter Weight 445.2

Date of Weighing 6/28/84 Gross Filter Weight 445.6

Average Gross Wt. 445.4

Filter Tare Wt. 425.4

Weight of Particulate on Filter 20.0

Total Weight of Particulate 31.47

PARTICULATE ANALYTICAL DATA FORM

Company: Pozzolay Construction Run Number: 3

Location: Scrubber Exhaust Acetone Density(Pa): .7867

Date: 6/24/84

Liquid Level Marked? ✓

Acetone Blank Concentration(Ca) .009

Acetone Rinse Volume(Vaw) 195

Residue in Rinse (Wa) = Ca·Vaw·Pa 1.38

Date of Weighing 6/26/84 Gross Wt. 108814.6

Date of Weighing 6/28/84 Gross Wt. 108814.8

Average Gross Wt. 108814.7

Less Blank Residue (Wa) 1.38

Tare Wt. 108783.9

Weight of Particulate in Acetone Rinse 29.42

Date of Weighing 6/26/84 Gross Filter Weight 455.1

Date of Weighing 6/28/84 Gross Filter Weight 454.2

Average Gross Wt. 454.65

Filter Tare Wt. 424.2

Weight of Particulate on Filter 30.45

Total Weight of Particulate 59.87

H^2O BLANK ANALYTICAL DATA FORM

Plant: Popejoy

Sample Location: Scrubber Exhaust

Liquid Level Marked? ✓

Blank Volume (Pa): 100 ml/s

Date of Weighing 7/5/84 Gross Weight 109942.9

Date of Weighing 7/7/84 Gross Weight 109942.9

Average Gross Weight 109942.9

Tare Weight 109941.6

Weight of Blank (ba) 1.3

= .013 mg/ml

Note: In no case should a blank residue greater than 0.01 mg/g or 0.001% of the blank weight be subtracted from the sample weight.

PARTICULATE ANALYTICAL DATA FORM

Company: Popejoy Construction Run Number: 1

Location: Scrubber - Exhaust Acetone Density(Pa): —

Date: 6/22/84

Liquid Level Marked? ✓

H^2O Blank Concentration(Ca) .013 mg/ml

Rinse Volume(Vaw) 480 mls

Residue in impinger(Wa) = 6.24 mg.

Date of Weighing 7/6/84 Gross Wt. 107089.9

Date of Weighing 7/7/84 Gross Wt. 107088.3

Average Gross Wt. 107089.1

Less Blank Residue (Wa) 6.24

Tare Wt. 107024.0

Weight of Particulate in impingers 578.86

Date of Weighing _____ Gross Filter Weight _____

Date of Weighing _____ Gross Filter Weight _____

Average Gross Wt. _____

Filter Tare Wt. _____

Weight of Particulate on Filter _____

Total Weight of Particulate _____

PARTICULATE ANALYTICAL DATA FORM

Company: Popejoy Run Number: 2

Location: Scrubber Exhaust Acetone Density(Pa): ——

Date: 6/22/90

Liquid Level Marked? ✓

H^2O Concentration(Ca) 0.012 mg/ml

Impinger Volume(Vaw) 410

Residue in H^2O (Wa) = 5.33

Date of Weighing 7/5/84 Gross Wt. 112 327.7

Date of Weighing 7/6/84 Gross Wt. 112 326.9

Average Gross Wt. 112 327.1

Less Blank Residue (Wa) 5.33

Tare Wt. 112 233.8

Weight of Particulate in Acetone Rinse 87.97

Date of Weighing _____ Gross Filter Weight _____

Date of Weighing _____ Gross Filter Weight _____

Average Gross Wt. _____

Filter Tare Wt. _____

Weight of Particulate on Filter _____

Total Weight of Particulate _____

PARTICULATE ANALYTICAL DATA FORM

Company: Papejoy Construction Run Number: 3

Location: Scrubber Exhaust Acetone Density(Pa): —

Date: 6/22/84

Liquid Level Marked? ✓

H^2O Blank Concentration(Ca) .013 mg/ml

Impinger Volume(Vaw) 408

Residue in Rinse (Wa) = Ca·Vaw·Pa 5.304

Date of Weighing 7/5/84 Gross Wt. 107735.3

Date of Weighing 7/7/84 Gross Wt. 107735.3

Average Gross Wt. 107735.3

Less Blank Residue (Wa) 5.304

Tare Wt. 107674.0

Weight of Particulate in Acetone Rinse 55.996

Date of Weighing _____ Gross Filter Weight _____

Date of Weighing _____ Gross Filter Weight _____

Average Gross Wt. _____

Filter Tare Wt. _____

Weight of Particulate on Filter _____

Total Weight of Particulate _____

APPENDIX C

Nozzle Calculations

2.57

(.15 ΔP) Ave 24.1 fps = ~~3/8~~ .72 cfm w 3/8 nozzle.

(.3 ΔP) High = 1.04 cfm " "

(.04 ΔP) Low = .38 cfm " "

Nozzle Calibration

.363 , .362 , .363 .0007175

Ave = .3627 .53

15 min

PARTICULATE FIELD DATA

CO_2	O_2	CO
4.8	13.0	0
5.0	12.7	0
4.9		

PLANT: Popejoy Construction
DATE: 6/22/84
REPETITION: 1

LOCATION: [illegible]
OPERATOR: TA
STACK #: —
SAMPLE BOX #: 1
METER BOX #: 1
AMBIENT TEMPERATURE: 82
BAROMETRIC PRESSURE: 26.9 @ 82
ASSUMED MOISTURE: [illegible]
PROBE LENGTH: 96"
NOZZLE DIAMETER: .5627
STACK DIAMETER: [illegible]
METER ΔH@: 1.850
C FACTOR: .81
METER CO-EFFICIENT: [illegible]

FILTER TARE: [illegible]

PRE-TEST LEAK CHECK
Meter: 0.00 cu. ft. @ [illegible] in. Hg
Pitots: ✓ @ 1.0 in. H2O

POST-TEST LEAK CHECK
Meter: 0.00 cu. ft. @ [illegible] in. Hg
Pitots: ✓ @ 1.0 in. H2O

	Initial	Final
#1:	100	305
#2:	100	165
#3:	0	10
#4:	200	212
#5:		

COMMENTS

38.288 39.264

P #	θ	Static Pressure	Ts °F	ΔP	√ΔP	ΔH	Vm ft.³	Tm Inlet	Tm Outlet	Oven Temp.	Imp. Outlet Temp.	Vacuum (in Hg)
A 1	9:44	-.08	[illegible]	[illegible]		[illegible]	[illegible]	[illegible]	[illegible]	[illegible]	[illegible]	[illegible]
2			160	.04		.30	3.2	9[illegible]	[illegible]	255	1[illegible]	3.[illegible]
3			165	.03		.2	4.6	95	90	250	1[illegible]	[illegible]
4			[illegible]	[illegible]		[illegible]	[illegible]	[illegible]	[illegible]	[illegible]	[illegible]	[illegible]
5			162	.06		.5	6.2	101	91	[illegible]	[illegible]	[illegible]
B 1	10:20	-.06	158	.11		.5	[illegible]	[illegible]	90	[illegible]	[illegible]	[illegible]
2			159	[illegible]		.5	9.1	103	[illegible]	[illegible]	[illegible]	[illegible]
3			161	.05		.4	10.6	106	94	250	100	[illegible]
4			162	.04		.3	11.7	107	94	255	102	3.0
5			165	.11		.9	12.4	111	[illegible]	[illegible]	102	[illegible]
C 1	10:35		150	.20		1.7	14.92	110	109	250	103	10.0
2			158	.18		1.5	16.2	110	109	255	100	10.0
3			161	.15		1.2	18.4	112	109	255	100	[illegible]
4			158	.10		.8	20.3	110	109	260	100	[illegible]
5			162	.11		1.0	21.9	101	113	255	100	9.0
D 1	10:50		155	.31		2.7	23.6	109	105	260	100	13.0
2			160	.29		2.5	26.4	110	105	260	100	6.0
3			160	.18		1.6	29.2	110	105	260	100	4.0
4			165	.10		.9	31.4	111	105	257	100	4.0
5			162	.11		1.0	32.9	112	105	260	95	4.0
E 1	11:16		163	.34		3.0	34.9	112	104	262	95	10.0
2			164	.33		2.8	37.7	111	104	260	95	[illegible]
3			160	.30		2.6	40.6	110	105	260	96	5.0
4			157	.20		1.8	43.4	112	105	260	97	5.0
5		-.07	160	.16		1.4	45.7	112	105	260	97	5.0
	11:31		160.7	.1448	.35716	.62 1.24	47.719	106.0	94.8	[illegible]		

PARTICULATE FIELD DATA

PLANT: Popeyey
DATE: 6/22/84
REPETITION: 2

LOCATION: [illegible]
OPERATOR: 1A
STACK #:
SAMPLE BOX #: 2
METER BOX #: 1
AMBIENT TEMPERATURE: 87
BAROMETRIC PRESSURE: [illegible] @ 78°
ASSUMED MOISTURE: 23
PROBE LENGTH: 96
NOZZLE DIAMETER: [illegible]
STACK DIAMETER: [illegible]
METER ΔH@: [illegible]
C FACTOR: .81
METER CO-EFFICIENT: [illegible]

CO_2	O_2	CO
6.2	12.1	0
5.5	13.0	0

IMPINGERS

	Initial	Final
#1:	100	250
#2:	100	152
#3:	0	8
#4:	200	221
#5:		

COMMENTS

FILTER TARE: [illegible]
PRE-TEST LEAK CHECK
Meter: [illegible] in. Hg
Pitots: ✓ @ 1.0 in. H2O
✓ 0.8

POST-TEST LEAK CHECK
Meter: [illegible] in.
Pitots: ✓ @ [illegible] in.
✓ .8

P #	θ	Static Pressure	Ts °F	ΔP	√ΔP	ΔH	Vm ft³	Tm Inlet	Tm Outlet	Oven Temp.	Imp. Outlet Temp.	Vacuum (in Hg)
C 1	1:07	-.05	157	[illegible]		3.5	[illegible]	[illegible]	[illegible]	[illegible]	100	[illegible]
2			159	.31		3.4	[illegible]	[illegible]	100	250	[illegible]	[illegible]
3			160	.25		2.8	55.2	108	102	248	98	10.0
4			159	[illegible]		1.5	[illegible]	110	104	250	98	5.0
5			160	.21		2.3	60.2	110	104	255	[illegible]	[illegible]
D 1	1:27	-.03	155	.32		3.5	62.8	107	104	252	99	[illegible]
2			161	.28		3.0	66.1	110	100	250	[illegible]	[illegible]
3			160	.14		1.6	69.2	114	105	250	99	[illegible]
4			158	.10		1.1	71.5	117	106	250	96	[illegible]
5			157	.14		1.6	73.2	119	107	252	96	3.0
C 1	1:50	-.06	158	.16		1.8	75.38	113	108	245	97	[illegible]
2			159	.10		1.2	77.7	115	110	250	97	[illegible]
3			158	.06		.7	79.6	119	108	245	96	2.0
4			155	.04		.5	81.0	119	105	250	96	2.0
5			157	.10		1.1	82.2	120	110	255	96	2.0
B 1	2:13	-.05	160	.08		.90	84.07	118	112	260	96	2.0
2			158	.05		.60	85.7	119	110	257	97	2.0
3			158	.03		.3	87.0	117	111	257	98	1.0
4			160	.02		.2	88.0	116	111	257	105	1.0
5			159	.04		.5	88.9	118	110	252	106	1.0
A 1	2:33		162	.06		.7	90.09	117	110	250	100	2.0
2			160	.02		.28	91.5	114	112	250	100	2.0
3			158	.02		.28	92.3	115	112	250	100	2.0
4			158	.02		.20	93.2	115	112	241	100	2.0
Avg		-.06	160	.03		.30	93.9	115	112	250	100	
			158.8	.1216	.8182	1.348	95.065	114.0	[illegible]			

PARTICULATE FIELD DATA

PLANT: Popejoy
DATE: 6/22/84
REPETITION: 3

LOCATION: Scrubber Exhaust
OPERATOR: TA
STACK #: —
SAMPLE BOX #: 1
METER BOX #: 1
AMBIENT TEMPERATURE: 89°
BAROMETRIC PRESSURE: 27.1 @ 78°
ASSUMED MOISTURE: 25%
PROBE LENGTH: 9'
NOZZLE DIAMETER: .2625
STACK DIAMETER: [illegible]
METER ΔH@: 1.885
C FACTOR: .81
METER CO-EFFICIENT: [illegible]

FILTER TARE: [illegible]
PRE-TEST LEAK CHECK
Meter: [illegible] in. HG
Pitots: ✓ @ 1.0 in. H2O
✓ 1.0

CO_2	O_2	CO
4.2	14.2	0
5.5	13.0	0
[illegible]	13.6	

IMPINGERS

	Initial	Final
#1:	100	250
#2:	100	143
#3:	0	10
#4:	200	255
#5:	—	

COMMENTS

POST-TEST LEAK CHECK
Meter: [illegible] in. HG
Pitots: ✓ @ 1.0 in. H2O
✓ .8

P #	θ	Static Pressure	Ts °F	ΔP	√ΔP	ΔH	Vm ft.³	Tm Inlet	Tm Outlet	Oven Temp.	Imp. Outlet Temp.	Vacuum (in Hg)
A 1	4:05	-.04	158	.08		.9	[illegible]	109	111	245	100	6.0
2			160	.02		.2	98.6	113	109	235	100	1.0
3			160	.02		.2	99.[illegible]	114	115	240	100	1.0
4			162	.02		.2	100.3	115	108	242	100	1.0
5			165	.04		.5	1.1	117	110	245	102	1.0
B 1	4:23	-.03	158	.10		1.2	2.[illegible]	118	115	246	102	[illegible]
2			157	.06		.7	4.2	119	111	245	102	6.0
3			157	.02		.2	5.6	119	111	246	102	1.0
4			160	.02		.2	6.0	120	110	250	102	1.0
5			161	.04		.5	7.3	120	110	252	102	1.0
C 1	4:45	-.03	160	.20		2.8	8.45	118	112	250	101	9.0
2			161	.17		2.0	11.3	119	114	250	101	8.5
3			161	.08		.9	13.8	119	114	252	101	5.0
4			160	.05		.60	15.4	120	116	250	101	5.0
5			160	.12		1.4	16.8	120	116	252	101	6.0
D 1	5:07	-.01	158	.28		3.3	18.89	117	116	250	101	10.0
2			160	.32		3.7	21.9	118	115	250	100	10.0
3			157	.20		2.3	25.3	122	117	252	100	8.0
4			160	.08		.9	27.9	121	118	250	100	6.0
5			158	.12		1.4	29.6	122	118	250	100	7.0
E 1	5:30	-.05	160	.32		3.8	31.710	117	115	250	100	10.0
2			160	.35		4.0	35.0	120	116	248	100	12.0
3			160	.28		3.3	38.5	120	116	250	100	12.0
4			160	.18		2.1	41.7	120	116	250	100	8.0
Avg		-.032	160	.12	.3334	1.4	44.2	121	116	252	100	5.0
Σ			159.7	.1332		1.542	646.225	118.3	113.6			

43.577

APPENDIX D

BERRY

Tractor and Equipment Co., Inc.
930 S. West St., Box 12288, Wichita, Kansas 67277

Both Fan Motors 14.30

100 First " 480 VAC

100 Second " 480 VAC

100 Third " 480 VAC

Water Pump

34 1st " 480 VAC

34 2nd " 480 VAC

33 3rd " 480 VAC

Observed by: MVE

Witnessed by:

Jon M. Fuller, P.E.

6/27/84

Fan Speed 2290 meas. by Vibration Engineer

Confirmed by manufacturer

DUANE V. HURTIG
Asphalt & Aggregate Mgr.
Bus. 316-943-4246
Res. 316-942-2845

Crushing Equipment
Hot Oil Systems
Pavers & Wideners
Asphalt Plants
Cold Mix Plants
Surge Systems
Heaters
Conveyors
Dryers

Lab. No. 6-84-2046
Date Received: 2-28-84
Date Reported: 5-11-84

Project No. 56-95 K 1637-01 | Material Type Bituminous Recycle
Field Engineer W. E. Winters | Contractor Popejoy Const. Co., Inc.
Specification 1203 PDH & [illegible] | Sampled From Stockpile
Asphalt Source Allied Materials Corp. | Grade RA-100

Sieve Size	1"	3/4	1/2	3/8	4	8	16	30	50	100	200
Job Mix Spec. Band		0		10-60		42-72		64-[illegible]			90-[illegible]
Job Mix Single Pt.		0	4	1[illegible]	2[illegible]	3[illegible]	4[illegible]	5[illegible]	[illegible]	8[illegible]	[illegible]
Marshall Gradation											

Test Preparation Data

Range % Asphalt	% Increments of Asphalt	Asphalt Mixing Temperature Range	Molding Temperature Range
to		Spec. 312 to 312	270 to 290
1.8 2.8	0.2	Actual [illegible] to 310	256 to 278

recycle 1.8%
virgin 3.1% RSN

P_b 2.93 max.

2.2

1.8 2.0 % ASPHALT CONTENT 2.2 2.4 2.6

	1.8	2.0	2.2	2.4	2.6	2.8	3.0
VMA 15 %			14.9				
% Air Voids 3 to 5			3.4				
% VFA 70%			77				
Bearing Capacity 100-300			362				
Weight Per Cubic Foot peak ±0.5%			146.3				
Stability			2589				
Theoretical Max. Den.	152.6	152.1	151.8	151.5	151.3	150.9	150.4

cc: Field Engineer (2)
District Engineer
Bureau of Construction & Maintenance
Bureau of Materials & Research (2)
Materials & Research Center (2)
File

Recommended % Asphalt 2.3
Note - Show values at Recommended Asphalt Content

District Materials Engineer

MIX = 50% MILLED MATERIAL (M.M) + 50% VIRGIN AGG.

P'_b 50% OF % ASPH IN M.M. + % RA-100

C.

$$\frac{\%\ \text{ASPH}\ P'_b}{\dfrac{50\%\ \text{OF}\ \%\ \text{ASPH IN M.M.}}{\text{SP.GR. ASPH. IN M.M.}} + \dfrac{\%\ \text{RA-100}}{\text{SP.GR. RA-100}}}$$

SP.GR. AGG. FROM MILLED MATERIAL:

$$\frac{100\%}{\dfrac{\%\ \text{AGG M.M.}}{X} + \dfrac{\%\ \text{ASPH M.M.}}{\text{SP.GR. ASPH. M.M.}}}$$

= RESULTS FROM KT-39 ON MILLED MATERIAL

X = SP.GR. AGG. IN M.M.

D.

$$\frac{50\%\ \text{OF}\ \%\ \text{AGG. IN M.M.} + 50\%\ \text{VIRGIN AGG.}}{\dfrac{50\%\ \text{OF}\ \%\ \text{AGG IN M.M.}}{\text{SP.GR. AGG. IN M.M.}} + \dfrac{50\%\ \text{VIRGIN AGG}}{\text{SP.GR. VIRGIN AGG.}}}$$

P'_b MAX. P'_b MAX TOTAL MIX / P'_b MAX TOTAL MIX MINUS P'_b MAX. OF % ASPH. FROM M.M.

ALLIED BUILDING • 5101 NORTH PENNSYLVANIA • P.O. BOX 12340 • OKLAHOMA CITY, OKLAHOMA 73157 • (405) 842-4403

ALLIED MATERIALS CORPORATION

REPLY TO
DRAWER G
STROUD, OKLAHOMA 74079

ASPHALT CERTIFICATION

It is hereby certified that the asphaltic material in the shipment was loaded from a State of Kansas approved tank, at [illegible] and that the material complies with the specifications of the Kansas Dept. of Transportation for the grade shown. It is further certified that the net quantity of material listed hereon is correct.

RA-100 GRADE

.9881 SPECIFIC GRAVITY

8.229 POUNDS PER GALLON

ALLIED MATERIALS CORP.

BY John Martin

ALLIED MATERIALS CORP.
PRODUCERS / REFINERS / MARKETERS
ASPHALT ROOFING MATERIALS / CONTRACTORS

PLANT DATA

CLIENT Poindexter Const. Co. Inc. RECORDED BY MJE

PROJECT NO. 56 95K 1637-01 DATE 6/22/84 CHECKED BY JMR

DATA SOURCE Operator's Control Panel RUN NO. 1

PLANT LOCATION 1/4 mi. S. of Moscow, KS

PLANT MANUFACTURER Astec PLANT MODEL NO. PRCM 427 PLANT TYPE Batch

MIX SPECIFICATION NO. OIL SPECIFICATION NO. PA-100

AGGREGATE PROPORTIONS Nominal 75% Sand 25% Rock, 50% Rap

TIME: START 9:45 STOP 11:27 Virgin Moist. Stg. 3.1 Recycle 1.8 A.T. 85 °F R.H. 60 %

Time of Hour	Fuel Oil / Natural Gas / Propane	Burner Setting	Aggregate TPH	Recycle TPH	Asphalt %	Mix Temperature °C	Vent Gas Color Density
9:45		24	Total 1	Total 10			
	5.65						
10:00		28	537	505	4.73		
	5.0		122	122	14.2	260°	40 10
10:15		27	507	459	4.35		C
			122	122	14.2	265°	20 10
10:30		31	436	437	5.1		
			124	120	14.3	259	20 10
10:45		28	467	468	5.56		C
			121	119	14.3	269	20 10
11:00		30	499	500	5.36	261	
			122	124	14.5		20 10
11:17		29	536	537	4.70	268	20 10
			122	124	14.5		

Submitted by:
Jon M. Puckett, P.E.
6/22/84

REMARKS: Test Moisture 3.1 % (Virgin) Test Moisture 1.8 % (Recycle)

* PA-100 + Oil in Rap's figured at 6.6% of Rap's feed

ALSO NEEDED: 1. Current readings on each leg of both fan motors and pumpjacks [illegible] Meter voltage [illegible]
2. A copy of [illegible] Dry.
-333. A/C oil [illegible] gallons/gallon deterioration
4 Marshall Report from KDOT

CHANGE

PLANT DATA

CLIENT Yoffe/Joy Const. Co. Inc. RECORDED BY MJE

PROJECT NO. 5695K 1637-01 DATE 6/22/84 CHECKED BY JMR

DATA SOURCE Operator's Control Panel RUN NO. 2

PLANT LOCATION 1/4 mi S. of Moscow, KS

PLANT MANUFACTURER Astec PLANT MODEL NO. PHDM 427 PLANT TYPE Batch

MIX SPECIFICATION NO. OIL SPECIFICATION NO. RA-100

AGGREGATE PROPORTIONS Natural 25% Sand, 25% Rock, 50% Recycle

TIME: START 13:05 STOP 14:47 Virgin Moist. Stg. 3.1 Recycle Moist. Stg. 1.8 A.T. 96 °F R.H. 50

Recycle Chute TIME 24 HOUR	#5 FUEL OIL / NATURAL GAS ☐ / PROPANE ☐ GPM	% BITUMEN SETTING %	Virgin TPH / Recycle TPH ASPHALT TPH	Virgin TPH / Recycle TPH PRODUCT TPH	Virgin TPH / Recycle TPH ASPHALT *	MIX TEMPERATURE °F	VENTURI / COLLECTOR DIFFERENTIAL "H2O	
13:00	5	29	745	744	9.25	266	24	
			115	116	13.7		17	
13:15		27	775	777	9777	265	24	55
			114.3	126.7	14.1		17	
13:30		25	804	806	9572	270	25	55
			114.2	114.3	13.7		17	55
13:45	4.250	24	833	835	9914	270	17.50	55
			119	112	13.9			
14:01			866	868	103.04	264	18.50	55
			116.5	119.9	14.1			
14:15		26	899	896	106.83	261	17.50	55
			120	118	14.1			
14:30		28	922.0	926	109.90	269	17.250	55
			119	116.5	13.8			
14:45		25	951	954	113.30	267	17	55
			115	120	14.1			

Witnessed by:
Jon M. Rueck, P.E.
6/22/84

REMARKS: Test Moisture 3.1 % (Virgin) Test Moisture 1.8 % (Recycle)

* RA-100 + Oil in Recycle figured at 6.6% of Recycle feed

ALSO NEEDED: 1. Current readings on each leg of both fan motors & burner motor during a test run. Measure voltage [illegible]
2. A copy of every weigh ticket for the day.
3. A/C oil ticket & pounds/gallon certification
4. Midway report from KDOT

CHANGE

-34-

B.11c

PLANT DATA

CLIENT Poffenroth Const. Co. Inc. RECORDED BY MJE

PROJECT NO. 5695K 1637-01 DATE 6/22/84 CHECKED BY [illegible]

DATA SOURCE Operator's Control Panel RUN NO. 3

PLANT LOCATION ½ mi S of Moscow, PS

PLANT MANUFACTURER Astec PLANT MODEL NO. RDM 427 PLANT TYPE [illegible]

MIX SPECIFICATION NO. OIL SPECIFICATION NO. RA-100

AGGREGATE PROPORTIONS [illegible]

TIME: START 16:00 STOP 17:45 Venturi Moist. Stg. 3 L Burner L 2 A.T. 105°F R.H. [illegible]

Every 15 Min TIME 24 HOUR	#2 FUEL OIL ☐ NATURAL GAS ☐ PROPANE ☐ GPM (GAL/HR)	% BURNER SETTING %	[illegible] TEMP ADDITIVE TEMP	[illegible] TEMP	[illegible] TEMP	MIX DISCHARGE TEMP °F	VENTURI COLLECTOR [illegible]
16:00	[illegible]	[illegible]	Total [illegible]	Total [illegible]	Total [illegible]	[illegible]	Total [illegible]
			Avg 119	Avg 122	15.1		
16:15		24	1133	1177	13.02	245	[illegible]
			118	117	13.9		
16:30		34	1161	1165	13.34	251	16
			120	120	14.5		
16:46		27	1191	1195	1193	248	17
			115	117	13.5		
17:02		32	1224	1228	145.91	6258	
			115	115	13.6		19
17:15		24	1250	1254	1289	265	
			116	120	13.6		17
17:30		21	1276	1280	152	266	
			114	114	13.6		1750
17:45		28	1305	1309	15555	261	17
			115	116	136		

Submitted by:
Jerry M. Trucks, P.E.
6/22/84

REMARKS: TEST MOISTURE 3.1 % (ASPHALT) TEST MOISTURE 1.8 % (RECYCLE)

☆ RA-100 + Oil in Panels figured at 6.6% of Panels fed

ALSO NEEDED: 1. [illegible] 2. [illegible] 3. [illegible]

CHANGE -35

CONSIGNEE'S COPY

[illegible] (U.S.) INC.

SHIPPED FROM [illegible] COMMERCE CITY, CO

This is to certify that the [illegible] described below [illegible] classified, described, packaged, marked and labeled, and are in proper condition [illegible] regulations of the Department of Transportation.

BILL OF LADING NO. [illegible]

DATE [illegible]

TIME OUT

SHIPPER

SOLD TO [illegible]

DRIVER NO.

SHIP TO [illegible]

DESTINATION [illegible]

EXCHANGE INFO

ORDER NO.

PRODUCT AND CLASSIFICATION	LOADING TEMP.	GROSS GALLONS	NET 60 F. GALLONS	LOAD AREA DOCK NO.
[illegible]			[illegible]	

Received subject to tariff and/or contracts in effect on the date of issuance hereof. Carrier hereby certifies that each cargo tank used for this shipment is a proper container for this commodity loaded therein and complies with interstate commerce rules and specifications.

I certify that the above Petroleum fuel has been checked by me and is found to be as represented.

CARRIER [illegible] By [illegible]

In the case of product being exported from Colorado:
Copy No. 3 must be mailed to Colorado Department of Revenue at the time of loading.
I certify that this product will be delivered in [illegible] State of Colorado.

CONSIGNEE [illegible] By [illegible]

APPENDIX E

Post-Test
Meter Box Calibration

Dry Gas Meter #: Meter Box # 1
Calibrated by: TA
Date: 6/28/84
Barometric Pressure: 29.67

Orifice ΔH	Test Meter Volume V_w	Dry Gas Meter Volume V_d	Temperature				Time θ	Y	ΔH@
			Test Meter T_w	Dry Gas Meter Inlet T_{di}	Dry Gas Meter Outlet T_{co}	Dry Gas Meter Ave T_d			
1.3	10.032	9.953	81	88	83.5	85.75	—	1.014	—
1.3	10.001	10.003	81.5	100	87	93.5	—	1.019	—
1.3	10.027	10.113	82.0	108.5	92	100.25	—	1.022	—

$$Y = \frac{V_w P_{bar} (T_d + 460)}{V_d (P_{bar} + \frac{\Delta H}{13.6}) (T_w + 460)}$$

$$\Delta H@ = \frac{0.0317 \Delta H}{P_{bar}(T_d + 460)} \left[\frac{(T_w + 460) \theta}{V_w} \right]^2$$

P_{bar} = Barometric Pressure

Meter Box Calibration

Dry Gas Meter #: Meter Box #1
Calibrated by: TA
Date: 6/12/84
Barometric Pressure: 29.7
Test Meter # : 26456

Orifice ΔH	Test Meter Volume V_w	Dry Gas Meter Volume V_d	Temperature				Time θ	γ	ΔH@
			Test Meter T_w	Dry Gas Meter					
				Inlet T_{di}	Outlet T_{do}	Ave T_d			
.5	4.397	4.392	78.5	84	81.5	82.75	11.25	1.002	1.87
1.0	5.002	5.056	78.5	91	84	87.5	8.75	1.003	1.74
2.0	10.012	10.185	78.5	92.5	89	93.75	13.0	1.006	1.83
3.0	10.119	10.226	79	104	94	99	11.1	1.018	2.002
4.0	10.022	10.115	79	105	92	99.25	9.42	1.017	.957
5.0	10.032	10.187	79	107.75	100	103.75	8.30	1.017	1.87
							Avg	1.012	1.888

$$\gamma = \frac{V_w P_{bar} (T_d + 460)}{V_d \left(P_{bar} + \frac{\Delta H}{13.6}\right) (T_w + 460)}$$

$$\Delta H@ = \frac{0.0317\ \Delta H}{P_{bar}(T_d + 460)} \left[\frac{(T_w + 460)\ \theta}{V_w}\right]^2$$

P_{bar} = Barometric Pressure

Thermometer Calibration

Company: Popejoy
Calibrated by: [illegible]
Date: 6/20/84
Barometric Pressure: 29.86

	Boiling H_2O		Ice H_2O		
Thermometer	Reading	Ref. (Hg Thermo)	Reading	Ref. (Hg Thermo)	%
Imp Outlet	210	210	38	39	0.10
Stack Temp	212	212	34	34	—
Oven Temp	212	212	34	34	—
Gas Meter In	213	214	34	34	0.10
Gas Meter Out	212	212	34	34	—

$$\left[\frac{(\text{Ref} + 460) - (\text{Test Thermo Temp} + 460)}{\text{Ref} + 460}\right] 100 = \%$$

Pitot Tube Calibration

Company: Popejoy
Calibrated By: TA
Date: 6/14/84
Barometric Pressure

Point #	Standard (ΔP std)	Type "s" ΔP	Cp
1	.17	.27	.793
2	.20	.30	.816
3	.25	.37	.822

Ave .810

$$Cp = Std\ Cp\sqrt{\frac{\Delta P\ std}{\Delta P}}$$

Std Cp= 1.0

Magnehelic Gauge Calibration

Date: 6/29/84
Calibrated by: TA
Barometric Pressure: 29.86
Gauge #: 0 - 1 inch

Point #	Gauge Reading	Manometer Reading	% Dev
1	.45	.45	—
2	.20	.20	—
3	.34	.33	3%
4	.26	.27	3.7%
5	.09	.09	—

Magnehelic calibration is less than 5% deviation at each point, therefore, is in calibration

Date: 6-6-84

Dry Gas Meter # 20256

Barometric Pressure 29.90 (in Hg)

$C = 17.64 \frac{V_s}{\theta} \frac{P_b}{(t_s + 460)}$

$Y_s = \frac{V_s}{V_{dg}} \frac{(\bar{t}_d + 460)}{(t_s + 460)} \frac{P_b}{(P_b + \frac{\Delta P}{13.6})}$

Invoice # 03925

Customer Turner Engineering

Calibrated by MDC

Andersen Samplers, Inc.
1215-C Wendell Drive
Atlanta, GA 30336

Approx. Flow Rate (Q) cfm	Wet Meter Volume (V_s) ft^3	Dry Gas Meter Volume (V_{dg}) ft^3	Temperatures: Wet Meter (t_s) °F	Dry Gas Meter Inlet (t_i) °F	Dry Gas Meter Outlet (t_o) °F	Dry Gas Meter Average ($\bar{t}_d$) °F	Dry Gas Meter Pressure (Δp) in H_2O	Time (θ) min	Flow Rate (Q) cfm	Meter Coefficient (Y_{ds})	Average Meter Coefficient ($\bar{Y}_{ds}$)
	5	5.01	75/535	76	78	77/537	.60	12.50	.394	1.000	
40	5	5.01	75/535	76	78	77/537	.60	12.50	.394	1.000	1.000
	5	5.01	75/535	76	78	77/537	.60	12.50	.394	1.000	
	5	5.03	76/536	77	81	80/540	.70	8.30	.593	1.000	
60	5	5.03	76/536	77	81	80/540	.70	8.30	.593	1.000	1.000
	5	5.03	76/536	77	81	80/540	.70	8.30	.593	1.000	
	5	5.03	77/537	80	82	81/541	.80	6.25	.786	.999	
80	5	5.03	77/537	80	82	81/541	.80	6.25	.786	.999	.999
	5	5.03	77/537	80	82	81/541	.80	6.25	.786	.999	
	5	5.03	79/539	81	83	82/542	.90	5.00	.979	.997	
00	5	5.03	79/539	81	83	82/542	.90	5.00	.979	.997	.997
	5	5.03	79/539	81	83	82/542	.90	5.00	.979	.997	
	5	5.04	79/539	81	83	82/542	1.00	4.15	1.179	.995	
20	5	5.04	79/539	81	83	82/542	1.00	4.15	1.179	.995	.995
	5	5.04	79/539	81	83	82/542	1.00	4.15	1.179	.995	

Date: 6-6-84

Dry Gas Meter # 26456

Barometric Pressure 29.90 (Pb) in Hg

$Q = 17.64 \frac{V_s}{\theta} \frac{P_b}{(t_s + 460)}$

$Y_{ds} = \frac{V_s}{V_{dg}} \frac{(\bar{t}_d + 460)}{(t_s + 460)} \frac{P_b}{(P_b + \frac{\Delta P}{13.6})}$

Invoice # 03925

Customer Turner Engineering

Calibrated by MDC

Andersen Samplers, Inc
1215-C Wendell Drive
Atlanta, GA 30336

Approx. Flow Rate ($\bar{Q}$) cfm	Wet Meter Volume (V_s) ft^3	Dry Gas Meter Volume (V_{dg}) ft^3	Temperatures: Wet Meter (t_s) °F	Dry Gas Meter: Inlet (t_i) °F	Dry Gas Meter: Outlet (t_o) °F	Dry Gas Meter: Average ($\bar{t}_d$) °F	Dry Gas Meter Pressure (Δp) in H_2O	Time (θ) min	Flow Rate (Q) cfm	Meter Coefficient (Y_{ds})	Average Meter Coefficient ($\bar{Y}_{ds}$)
40	5	5.01	75/535	76	78	77/537	.60	12.50	.394	1.000	1.000
	5	5.01	75/535	76	78	77/537	.60	12.50	.394	1.000	
	5	5.01	75/539	76	78	77/537	.60	12.50	.394	1.000	
60	5	5.03	76/536	79	81	80/540	.70	8.30	.593	1.000	1.000
	5	5.03	76/536	79	81	80/540	.70	8.30	.593	1.000	
	5	5.03	76/536	79	81	80/540	.70	8.30	.593	1.000	
80	5	5.03	77/537	80	82	81/541	.80	6.25	.786	.999	.999
	5	5.03	77/537	80	82	81/541	.80	6.25	.786	.999	
	5	5.03	77/537	80	82	81/541	.80	6.25	.786	.999	
00	5	5.03	79/539	81	83	82/542	.90	5.00	.979	.997	.997
	5	5.03	79/539	81	83	82/542	.90	5.00	.979	.997	
	5	5.03	79/539	81	83	82/542	.90	5.00	.979	.997	
20	5	5.04	79/539	81	83	82/542	1.00	4.15	1.179	.995	.995
	5	5.04	79/539	81	83	82/542	1.00	4.15	1.179	.995	
	5	5.04	79/539	[illegible]	83	82/542	[illegible]	[illegible]	[illegible]	[illegible]	

APPENDIX F

SAMPLING EQUIPMENT

SCHEMATIC AND LITERATURE

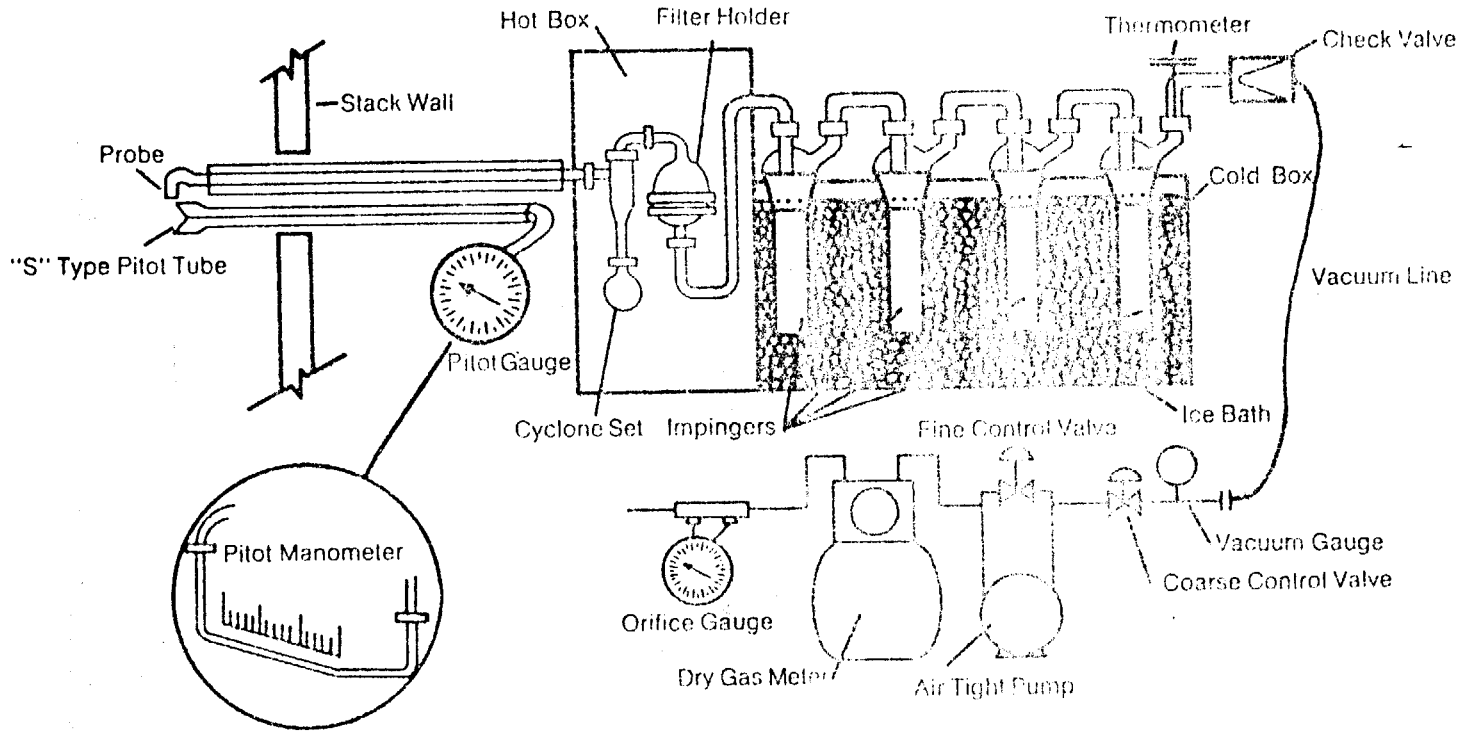

FIGURE 1-3 MODEL 31 SAMPLING TRAIN SCHEMATIC

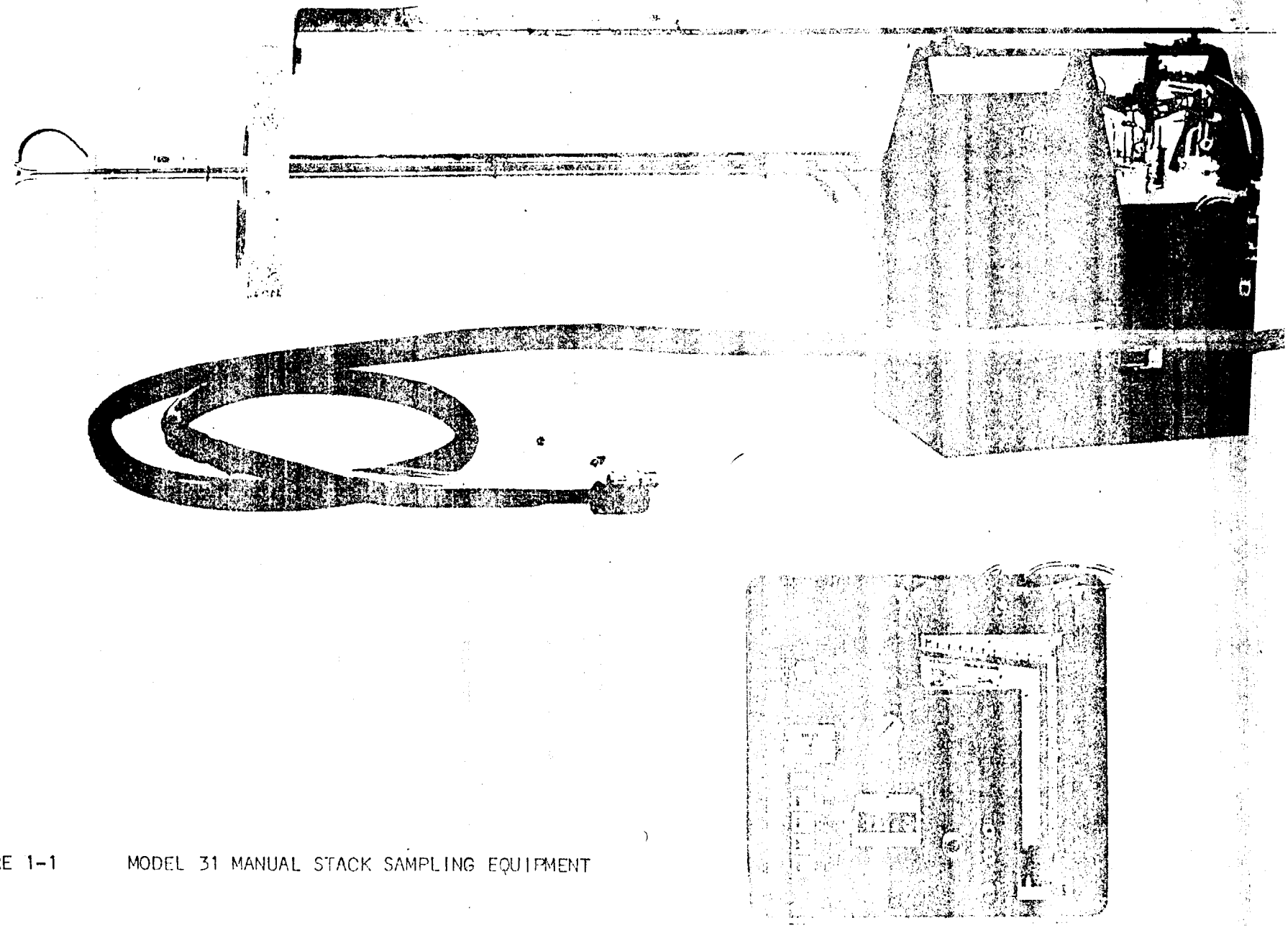

FIGURE 1-1 MODEL 31 MANUAL STACK SAMPLING EQUIPMENT

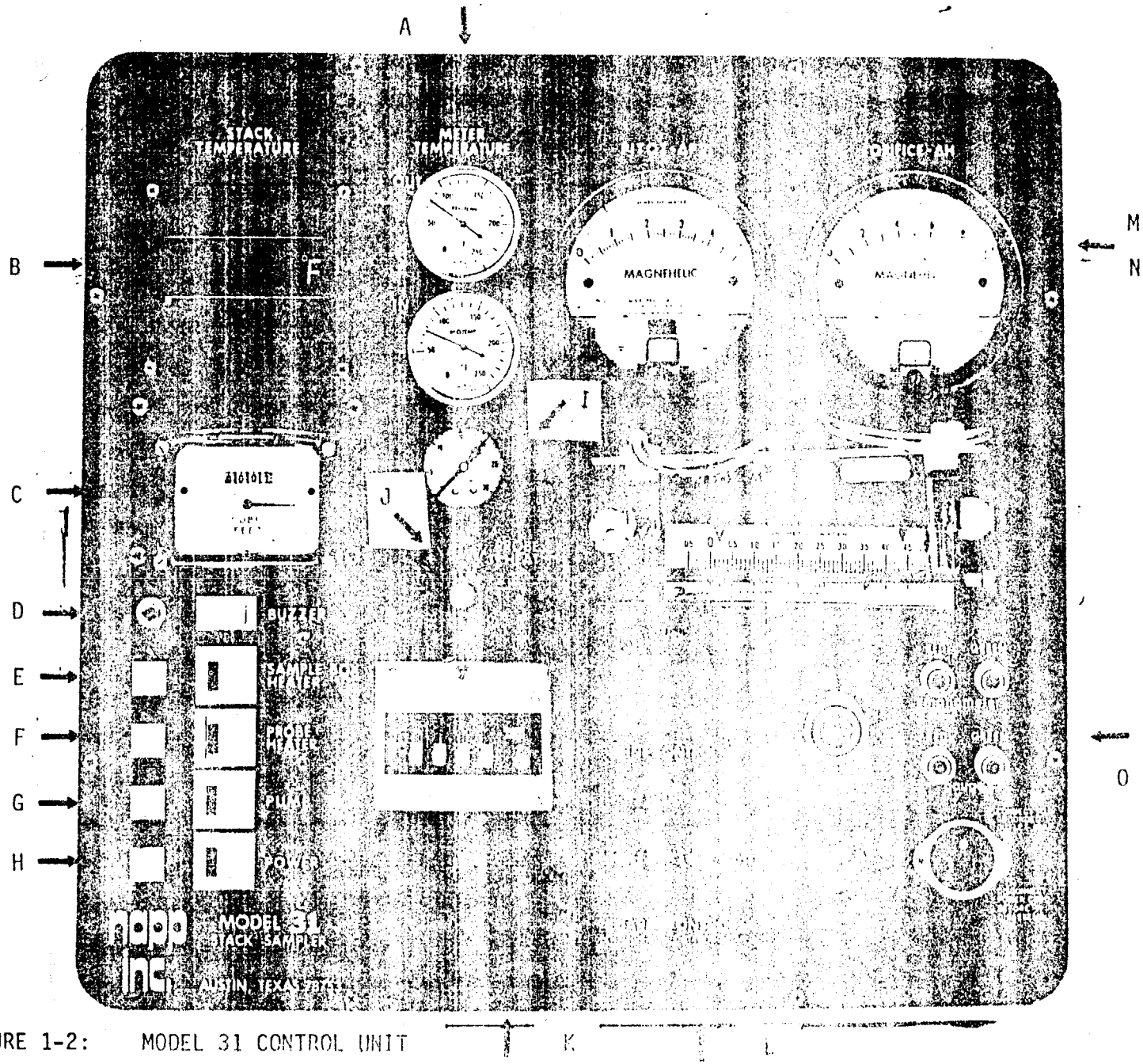

FIGURE 1-2: MODEL 31 CONTROL UNIT

APPENDIX G

KANSAS DEPARTMENT OF HEALTH AND ENVIRONMENT

AIR QUALITY INSPECTION

Routine _____

Compliance ✓

Firm Name Porejay Construction Co.

Address (Location) near Moscow Box 355

City Elkhart County Stevens

Person(s) Interviewed Don Porejay

Description of Physical Plant & Neighborhood Moscow North, farmland all other directions

Weather Conditions Pt. Cloudy

Source	Operating
Aggregate handling	0
Aggregate Bins (9)	5
Open Belt	0
Filter Shaker	0
Open Belt	0
Transfer point to Drum	0
Recycle Asphalt handling	0
Open Belt	0
Scalper Shaker	10
Recycle Asphalt handling	0
Recycle Bin	5
Transfer Point to Drum	0
Oil Heater	0
Mixer	0
Wet scrubber stack	5-10
Enclosed Conveyor	0
Truck Loadout	0
Power Source	5

Date of This Inspection 6-22-84 Signature W. Lynn Apperson

(9-82)

KANSAS DEPARTMENT OF HEALTH AND ENVIRONMENT - VISIBLE EMISSION OBSERVATION FORM

SOURCE NAME	Popejoy Construction Co.
ADDRESS	
CITY	Olathe
STATE	Kansas
ZIP	66
PHONE	
SOURCE ID NUMBER	
PROCESS EQUIPMENT	Hot Mix Asphalt Plant
OPERATING RATE	250 T/hr.
CONTROL EQUIPMENT	Wet Scrubber
OPERATING MODE	16" water drop
DESCRIBE EMISSION POINT	Wet Scrubber Stack
HEIGHT ABOVE GROUND LEVEL	30
HEIGHT ABOVE PRODUCTION	25
DISTANCE FROM OBSERVER	120'
DIRECTION FROM OBSERVER	NNW
DESCRIBE EMISSION	~~Light Gray~~ Particulate
EMISSION COLOR	Light Gray
POINT TYPE	CONTINUOUS ☒ FUGITIVE ☐ INTERMITTENT ☐
WATER DROPLETS PRESENT	NO ☐ YES ☒
IN PLUME AT POINT OF EMISSION	INVISIBLE ☐ VISIBLE ☐
AT WHAT POINT IN THE PLUME WAS OPACITY DETERMINED	2' above Stack
DESCRIBE BACKGROUND	Sky
BACKGROUND COLOR	Blue
SKY CONDITIONS	Pt. Cloudy
WIND SPEED	15-20
WIND DIRECTION	SSW
AMBIENT TEMPERATURE	96
RELATIVE HUMIDITY	46 %

SOUTHERN EXPOSURE SKETCH — DRAW NORTH ARROW

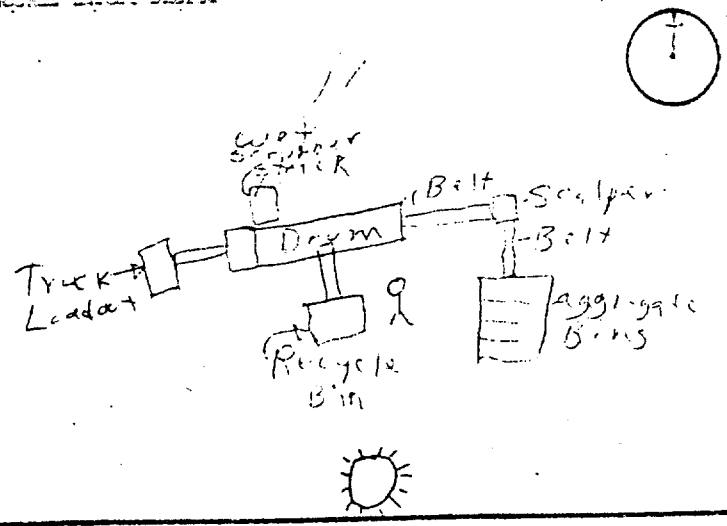

OBSERVATION DATE	START TIME	STOP TIME
6-22-94	1:19	1:35

MIN \ SEC	0	15	30	45	MIN \ SEC	0	15	30	45
1	0	5	5	10	31				
2	10	10	10	5	32				
3	10	5	10	5	33				
4	5	10	10	5	34				
5	5	5	5	10	35				
6	10	5	10	15	36				
7	10				37				
8					38				
9					39				
10					40				
11					41				
12					42				
13					43				
14					44				
15					45				
16					46				
17					47				
18					48				
19					49				
20					50				
21					51				
22					52				
23					53				
24					54				
25					55				
26					56				
27					57				
28					58				
29					59				
30					60				

AVERAGE OPACITY: 7.6

NUMBER OF READINGS ABOVE: 20 & WERE 0

RANGE OF OPACITY READINGS: MINIMUM 0 MAXIMUM 15

COMMENTS: For Compliance with K.A.R. 28-19-50

OBSERVER'S NAME (PRINT): W. Lynn Apperson

OBSERVER'S SIGNATURE: W. Lynn Apperson

DATE: 6-22-94

ORGANIZATION: KDHE

PERSON INTERVIEWED: Dan Popejoy

TITLE: Owner

VERIFIED BY:

DATE:

APPENDIX H

Table 1-2. LOCATION OF TRAVERSE POINTS IN CIRCULAR STACKS

(Percent of stack diameter from inside wall to traverse point)

Traverse point number on a diameter	Number of traverse points on a diameter											
	2	4	6	8	10	12	14	16	18	20	22	24
1	14.6	6.7	4.4	3.2	2.6	2.1	1.8	1.6	1.4	1.3	1.1	1.1
2	85.4	25.0	14.6	10.5	8.2	6.7	5.7	4.9	4.4	3.9	3.5	3.2
3		75.0	29.6	19.4	14.6	11.8	9.9	8.5	7.5	6.7	6.0	5.5
4		93.3	70.4	32.3	23.6	17.7	14.6	12.5	10.9	9.7	8.7	7.9
5			85.4	67.7	34.2	25.0	20.1	16.9	14.6	12.9	11.6	10.5
6			95.6	80.6	65.8	35.6	26.9	22.0	18.8	16.5	14.6	13.2
7				89.5	77.4	64.4	36.6	29.2	23.6	20.4	18.0	16.1
8				96.8	85.4	75.0	63.4	37.5	29.6	25.0	21.8	19.4
9					97.8	82.3	73.1	62.5	38.2	30.4	25.0	22.0
10					97.4	88.2	79.9	71.7	61.8	38.3	31.5	27.2
11						93.3	85.4	78.0	70.4	61.2	38.3	32.3
12						97.9	90.1	83.1	76.4	69.4	60.7	39.8
13							94.3	87.5	81.2	75.0	68.5	60.2
14							98.2	91.5	85.4	79.6	73.3	67.7
15								95.1	89.1	83.5	78.0	72.8
16								98.4	92.5	87.1	82.0	77.0
17									95.6	90.3	85.4	80.6
18									98.6	93.3	88.4	83.9
19										96.1	91.3	86.6
20										98.7	94.0	89.5
21											96.5	92.1
22											98.9	94.6
23												96.8
24												98.9

2.3.1.2 Stacks With Diameters Equal to or Less Than 0.61 m (24 in.). Follow the procedure in Section 2.3.1.1, noting only that any "adjusted" points should be relocated away from the stack walls to (1) a distance of 1.3 cm (0.50 in.), or (2) a distance equal to the nozzle inside diameter, whichever is larger.

2.3.2 Rectangular Stacks. Determine the number of traverse points as explained in Sections 2.1 and 2.2 of this method. From Table 1-1, determine the grid configuration. Divide the stack cross-section into as many equal rectangular elemental areas as traverse points, and then locate a traverse point at the centroid of each equal area according to the example in Figure 1-4.

If the tester desires to use more than the minimum number of traverse points, expand the "minimum number of traverse points" matrix (see Table 1-1) by adding the extra traverse points along one or the other or both legs of the matrix; the final matrix need not be balanced. For example, if a 4x3 "minimum number of points; matrix were expanded to 36 points, the final matrix could be 9x4 or 12x3, and would not necessarily have to be 6x6. After constructing the final matrix, divide the stack cross-section into as many equal rectangular, elemental areas as traverse points, and locate a traverse point at the centroid of each equal area.

The situation of traverse points being too close to the stack walls is not expected to arise with rectangular stacks. If this problem should ever arise, the Administrator must be contacted for resolution of the matter.

2.4 Verification of Absence of Cyclonic Flow. In most stationary sources, the direction of stack gas flow is essentially parallel to the stack walls. However, cyclonic flow may exist (1) after such devices as cyclones and inertial demisters following venturi scrubbers, or (2) in stacks having tangential inlets or other duct configurations which tend to induce swirling; in these instances, the presence or absence of cyclonic flow at the sampling location must be determined. The following techniques are acceptable for this determination.

Level and zero the manometer. Connect a Type S pitot tube to the manometer. Position the Type S pitot tube at each traverse point, in succession, so that the planes of the face openings of the pitot tube are perpendicular to the stack cross-sectional plane; when the Type S pitot tube is in this position, it is at "0° reference." Note the differential pressure (Δp) reading at each traverse point. If a null (zero) pitot reading is obtained at 0° reference at a given traverse point, an acceptable flow condition exists at

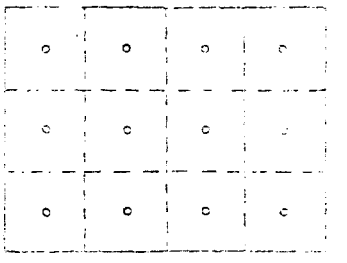

Figure 1-4. Example showing rectangular stack cross-section divided into 12 equal areas with the traverse point at centroid of each area.

that point. If the pitot reading is not zero at 0° reference, rotate the pitot tube (in ±90° yaw angle), until a null reading is obtained. Carefully determine and record the value of the rotation angle (α) to the nearest degree. After the null technique has been applied at each traverse point, calculate the average of the absolute values of α, assign α values of 0° to those points for which no rotation was required, and include these in the overall average. If the average value of α is greater than 10°, the overall flow condition in the stack is unacceptable, and alternative methodology, subject to the approval of the Administrator, must be used to perform accurate sample and velocity traverses.

3. *Bibliography*

1. Determining Dust Concentration in a Gas Stream. ASME Performance Test Code No. 27. New York. 1957.

2. Devorkin, Howard, et al. Air Pollution Source Testing Manual. Air Pollution Control District. Los Angeles, CA. November 1963.

3. Methods for Determination of Velocity, Volume, Dust and Mist Content of Gases. Western Precipitation Division of Joy Manufacturing Co. Los Angeles, CA. Bulletin WP-50. 1968.

4. Standard Method for Sampling Stacks for Particulate Matter. In: 1971 Book of ASTM Standards, Part 23. ASTM Designation D-2928-71. Philadelphia, Pa. 1971.

5. Hanson, H. A., et al. Particulate Sampling Strategies for Large Power Plants Including Nonuniform Flow. USEPA, ORD, ESRL, Research Triangle Park, N.C. EPA-600/2-76-170. June 1976.

6. Entropy Environmentalists, Inc. Determination of the Optimum Number of Sampling Points: An Analysis of Method 1 Criteria. Environmental Protection Agency, Research Triangle Park, N.C. EPA Contract No. 68-01-3172, Task 7.

Reprinted from CFR Title 40 dated July 1980

pages 283 - 289

1. *Principle and Applicability*

1.1 Principle. The average gas velocity in a stack is determined from the gas density and from measurement of the average velocity head with a Type S (Stausscheibe or reverse type) pitot tube.

1.2 Applicability. This method is applicable for measurement of the average velocity of a gas stream and for quantifying gas flow.

This procedure is not applicable at measurement sites which fail to meet the criteria of Method 1, Section 2.1. Also, the method cannot be used for direct measurement in cyclonic or swirling gas streams. Section 2.4 of Method 1 shows how to determine cyclonic or swirling flow conditions. When unacceptable conditions exist, alternative procedures, subject to the approval of the Administrator, U.S. Environmental Protection Agency, must be employed to make accurate flow rate determinations. Examples of such alternative procedures are: (1) to install straightening vanes, (2) to calculate the total volumetric flow rate stoichiometrically, or (3) to move to another measurement site at which the flow is acceptable.

2. *Apparatus*

Specifications for the apparatus are given below. Any other apparatus that has been demonstrated (subject to approval of the Administrator) to be capable of meeting the specifications will be considered acceptable.

2.1 Type S Pitot Tube. The Type S pitot tube (Figure 2.1) shall be made of metal tubing (e.g. stainless steel). It is recommended that the external tubing diameter (dimension *D*, Figure 2.2b) be between 0.48 and 0.95 centimeters (3/16 and 3/8 inch). There shall be an equal distance from the base of each leg of the pitot tube to its face-opening plane (dimensions P_A and P_B, Figure 2.2b); it is recommended that this distance be between 1.05 and 1.50 times the external tubing diameter. The face openings of the pitot tube shall, preferably, be aligned as shown in Figure 2.2; however, slight misalignments of the openings are permissible (see Figure 2.3).

The Type S pitot tube shall have a known coefficient, determined as outlined in Section 4; an identification number shall be assigned to the pitot tube; this number shall be permanently marked or engraved on the body of the tube.

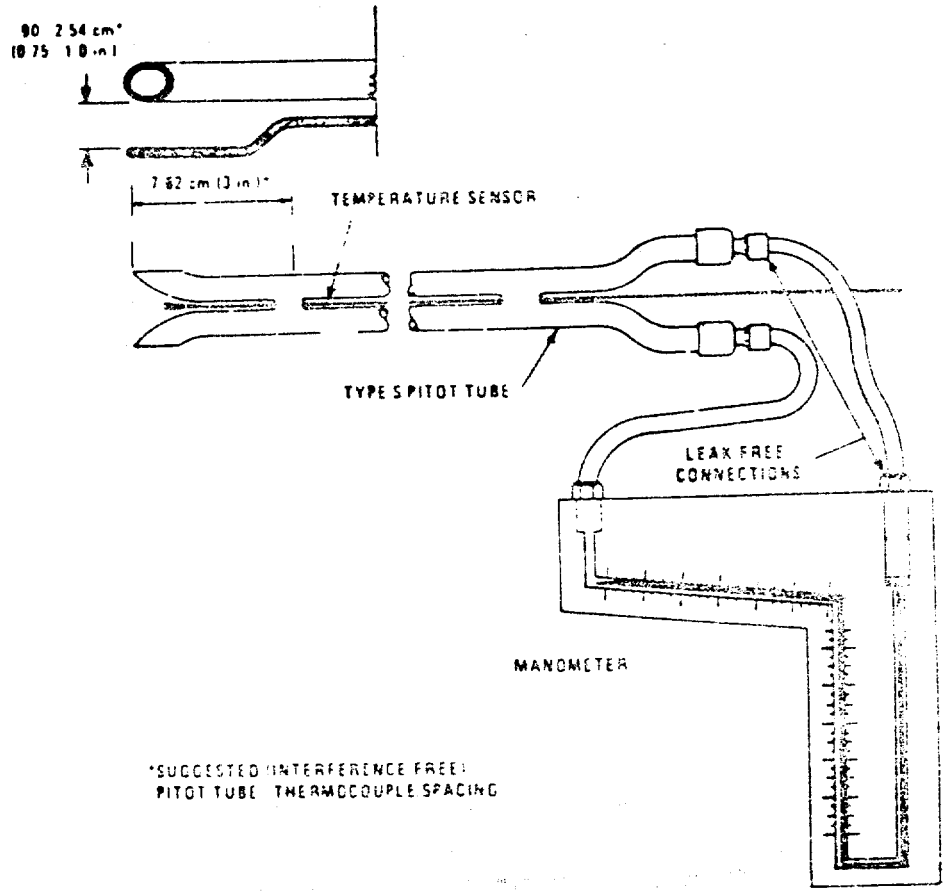

Figure 2.1. Type S pitot tube manometer assembly.

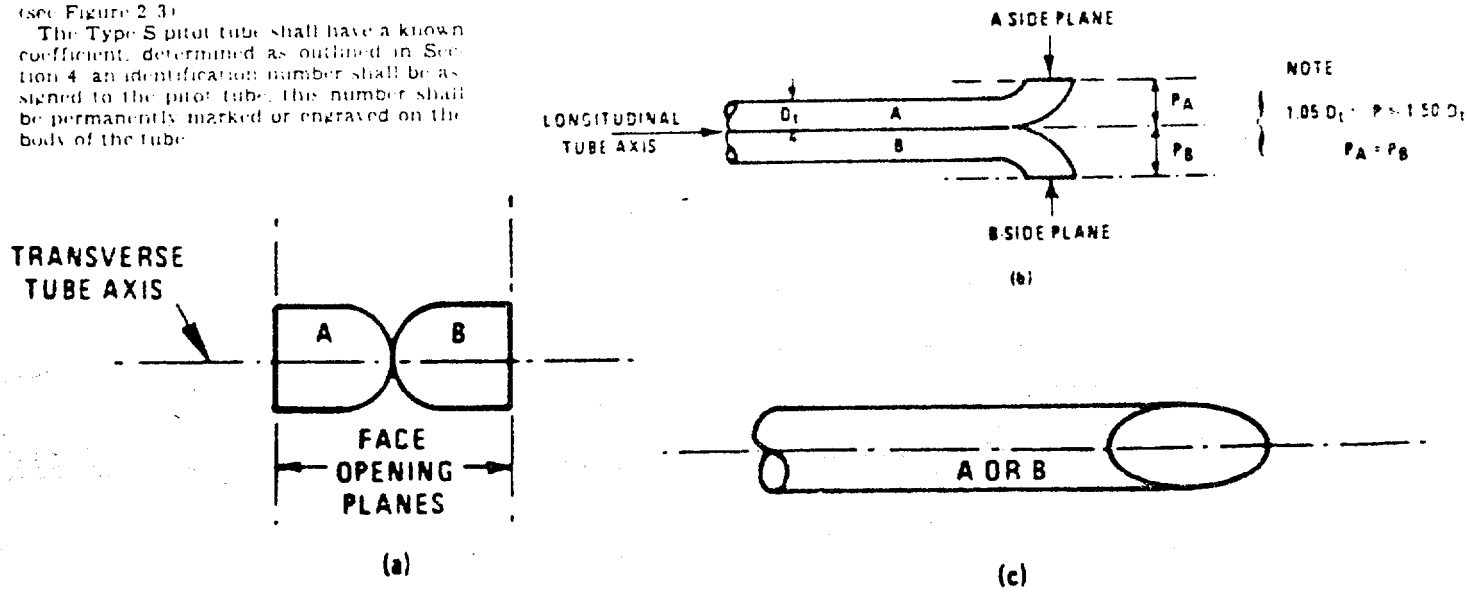

Figure 2.2. Properly constructed Type S pitot tube: shown in (a) end view, face opening planes perpendicular to transverse axis; (b) top view, face opening planes parallel to longitudinal axis; (c) side view, both legs of equal length and centerlines coincident when viewed from both sides. Baseline coefficient values of 0.84 may be assigned to pitot tubes constructed this way.

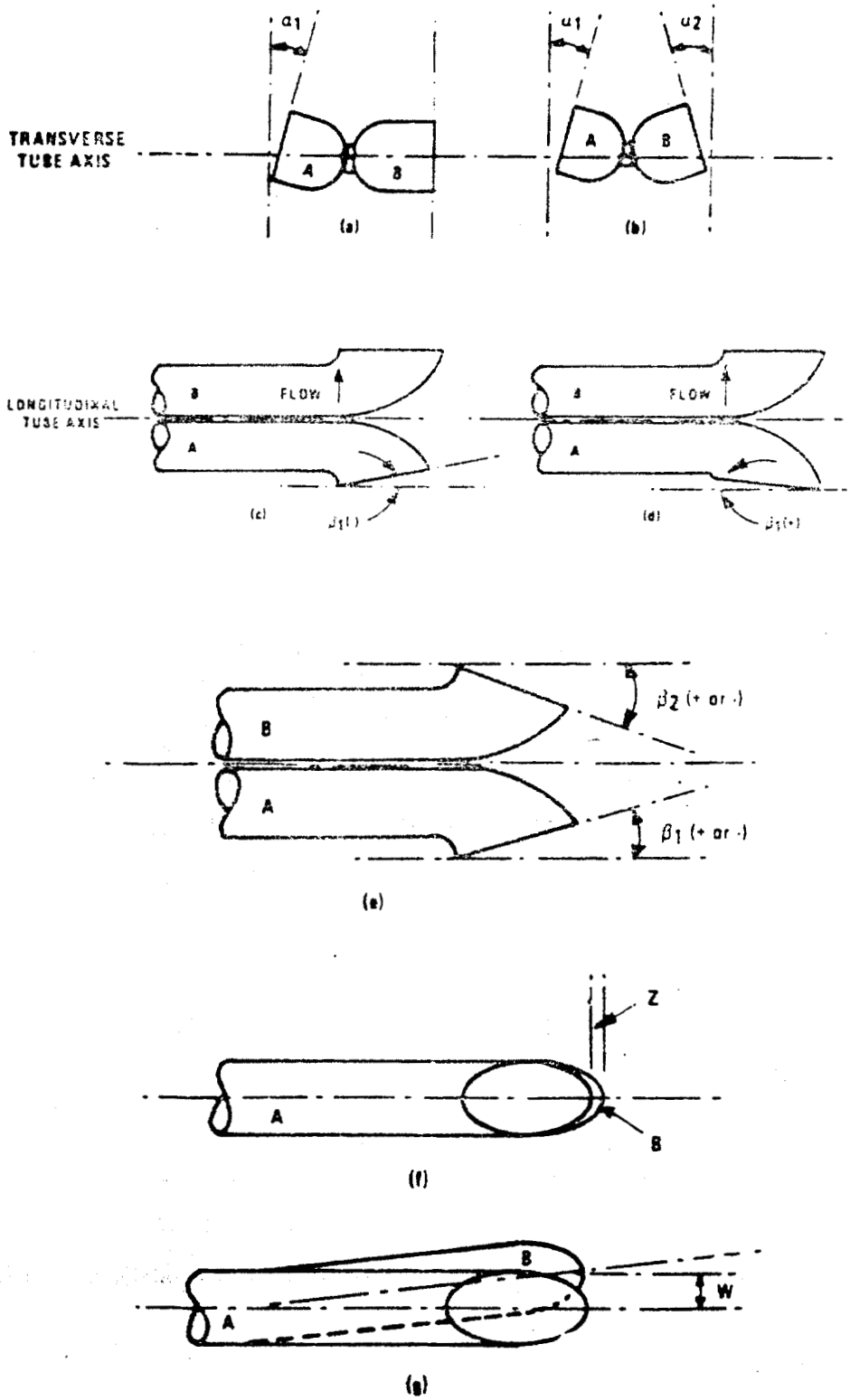

Figure 2-3 Types of face-opening misalignment that can result from field use or improper construction of Type S pitot tubes. These will not affect the baseline value of Cp(s) so long as α1 and α2 < 10°, β1 and β2 < 5°, z < 0.32 cm (1/8 in.) and w < 0.08 cm (1/32 in.) (citation 11 in Section 6)

Reprinted from CFR Title 40 dated July 1980
pages 290-310

A standard pitot tube may be used instead of a Type S, provided that it meets the specifications of Sections 2.7 and 4.2; note, however, that the static and impact pressure holes of standard pitot tubes are susceptible to plugging in particulate-laden gas streams. Therefore, whenever a standard pitot tube is used to perform a traverse, adequate proof must be furnished that the openings of the pitot tube have not plugged up during the traverse period; this can be done by taking a velocity head (Δp) reading at the final traverse point, cleaning out the impact and static holes of the standard pitot tube by "back-purging" with pressurized air, and then taking another Δp reading. If the Δp readings made before and after the air purge are the same (±5 percent), the traverse is acceptable. Otherwise, reject the run. Note that if Δp at the final traverse point is unsuitably low, another point may be selected. If "back-purging" at regular intervals is part of the procedure, then comparative Δp readings shall be taken, as above, for the last two back purges at which suitably high Δp readings are observed.

2.2 Differential Pressure Gauge. An inclined manometer or equivalent device is used. Most sampling trains are equipped with a 10-in. (water column) inclined-vertical manometer, having 0.01-in. H_2O divisions on the 0- to 1-in. inclined scale, and 0.1-in. H_2O divisions on the 1- to 10-in. vertical scale. This type of manometer (or other gauge of equivalent sensitivity) is satisfactory for the measurement of Δp values as low as 1.3 mm (0.05 in.) H_2O. However, a differential pressure gauge of greater sensitivity shall be used (subject to the approval of the Administrator), if any of the following is found to be true: (1) the arithmetic average of all Δp readings at the traverse points in the stack is less than 1.3 mm (0.05 in.) H_2O; (2) for traverses of 12 or more points, more than 10 percent of the individual Δp readings are below 1.3 mm (0.05 in.) H_2O; (3) for traverses of fewer than 12 points, more than one Δp reading is below 1.3 mm (0.05 in.) H_2O. Citation 18 in Section 6 describes commercially available instrumentation for the measurement of low-range gas velocities.

As an alternative to criteria (1) through (3) above, the following calculation may be performed to determine the necessity of using a more sensitive differential pressure gauge:

$$T = \frac{\sum_{i=1}^{n} \sqrt{\Delta p_i} + K}{\sum_{i=1}^{n} \sqrt{\Delta p_i}}$$

where:

Δp = Individual velocity head reading at a traverse point, mm H_2O (in. H_2O).

n = Total number of traverse points.

K = 0.13 mm H_2O when metric units are used and 0.005 in H_2O when English units are used.

If T is greater than 1.05, the velocity head data are unacceptable and a more sensitive differential pressure gauge must be used.

NOTE.—If differential pressure gauges other than inclined manometers are used (e.g., magnehelic gauges), their calibration must be checked after each test series. To check the calibration of a differential pressure gauge, compare Δp readings of the gauge with those of a gauge-oil manometer at a minimum of three points, approximately representing the range of Δp values in the stack. If, at each point, the values of Δp as read by the differential pressure gauge and gauge-oil manometer agree to within 5 percent, the differential pressure gauge shall be considered to be in proper calibration. Otherwise, the test series shall either be voided, or procedures to adjust the measured Δp values and final results shall be used subject to the approval of the Administrator.

2.3 Temperature Gauge. A thermocouple, liquid filled bulb thermometer, bimetallic thermometer, mercury-in-glass thermometer, or other gauge capable of measuring temperature to within 1.5 percent of the minimum absolute stack temperature shall be used. The temperature gauge shall be attached to the pitot tube such that the sensor tip does not touch any metal; the gauge shall be in an interference-free arrangement with respect to the pitot tube face openings (see Figure 2-1 and also Figure 2-7 in Section 4). Alternate positions may be used if the pitot tube-temperature gauge system is calibrated according to the procedure of Section 4. Provided that a difference of not more than 1 percent in the average velocity measurement is introduced, the temperature gauge need not be attached to the pitot tube; this alternative is subject to the approval of the Administrator.

2.4 Pressure Probe and Gauge. A piezometer tube and mercury- or water-filled U-tube manometer capable of measuring stack pressure to within 2.5 mm (0.1 in.) Hg is used. The static tap of a standard type pitot tube or one leg of a Type S pitot tube with the face opening planes positioned parallel to the gas flow may also be used as the pressure probe.

2.5 Barometer. A mercury, aneroid, or other barometer capable of measuring atmospheric pressure to within 2.5 mm Hg (0.1 in. Hg) may be used. In many cases, the barometric reading may be obtained from a nearby national weather service station, in which case the station value (which is the absolute barometric pressure) shall be requested and an adjustment for elevation differences between the weather station and the sampling point shall be applied at a rate of minus 2.5 mm (0.1 in.) Hg per 30 meter (100 foot) elevation increase or vice versa for elevation decrease.

2.6 Gas Density Determination Equipment. Method 3 equipment, if needed (see Section 3.6), to determine the stack gas dry molecular weight, and Reference Method 4 or Method 5 equipment for moisture content determination; other methods may be used subject to approval of the Administrator.

2.7 Calibration Pilot Tube. When calibration of the Type S pitot tube is necessary (see Section 4), a standard pitot tube is used as a reference. The standard pitot tube shall, preferably, have a known coefficient, obtained either (1) directly from the National Bureau of Standards, Route 270, Quince Orchard Road, Gaithersburg, Maryland; or (2) by calibration against another standard pitot tube with an NBS-traceable coefficient. Alternatively, a standard pitot tube designed according to the criteria given in 2.7.1 through 2.7.5 below and illustrated in Figure 2-4 (see also Citations 7, 8, and 17 in Section 6) may be used. Pitot tubes designed according to these specifications will have baseline coefficients of about 0.99 ± 0.01.

2.7.1 Hemispherical (shown in Figure 2-4), ellipsoidal, or conical tip.

2.7.2 A minimum of six diameters straight run (based upon D, the external diameter of the tube) between the tip and the static pressure holes.

2.7.3 A minimum of eight diameters straight run between the static pressure holes and the centerline of the external tube, following the 90 degree bend.

2.7.4 Static pressure holes of equal size (approximately 0.1 D), equally spaced in a piezometer ring configuration.

2.7.5 Ninety degree bend, with curved or mitered junction.

2.8 Differential Pressure Gauge for Type S Pitot Tube Calibration. An inclined manometer or equivalent is used. If the single-velocity calibration technique is employed (see Section 4.1.2.3), the calibration differential pressure gauge shall be readable to the nearest 0.13 mm H_2O (0.005 in. H_2O). For multivelocity calibrations, the gauge shall be readable to the nearest 0.13 mm H_2O (0.005 in H_2O) for Δp values between 1.3 and 25 mm H_2O (0.05 and 1.0 in. H_2O), and to the nearest 1.3 mm H_2O (0.05 in. H_2O) for Δp values above 25 mm H_2O (1.0 in. H_2O). A special, more sensitive gauge will be required to read Δp values below 1.3 mm H_2O (0.05 in. H_2O) (see Citation 18 in Section 6).

Reprinted from CFR Title 40, dated July 1980

pages 290-310

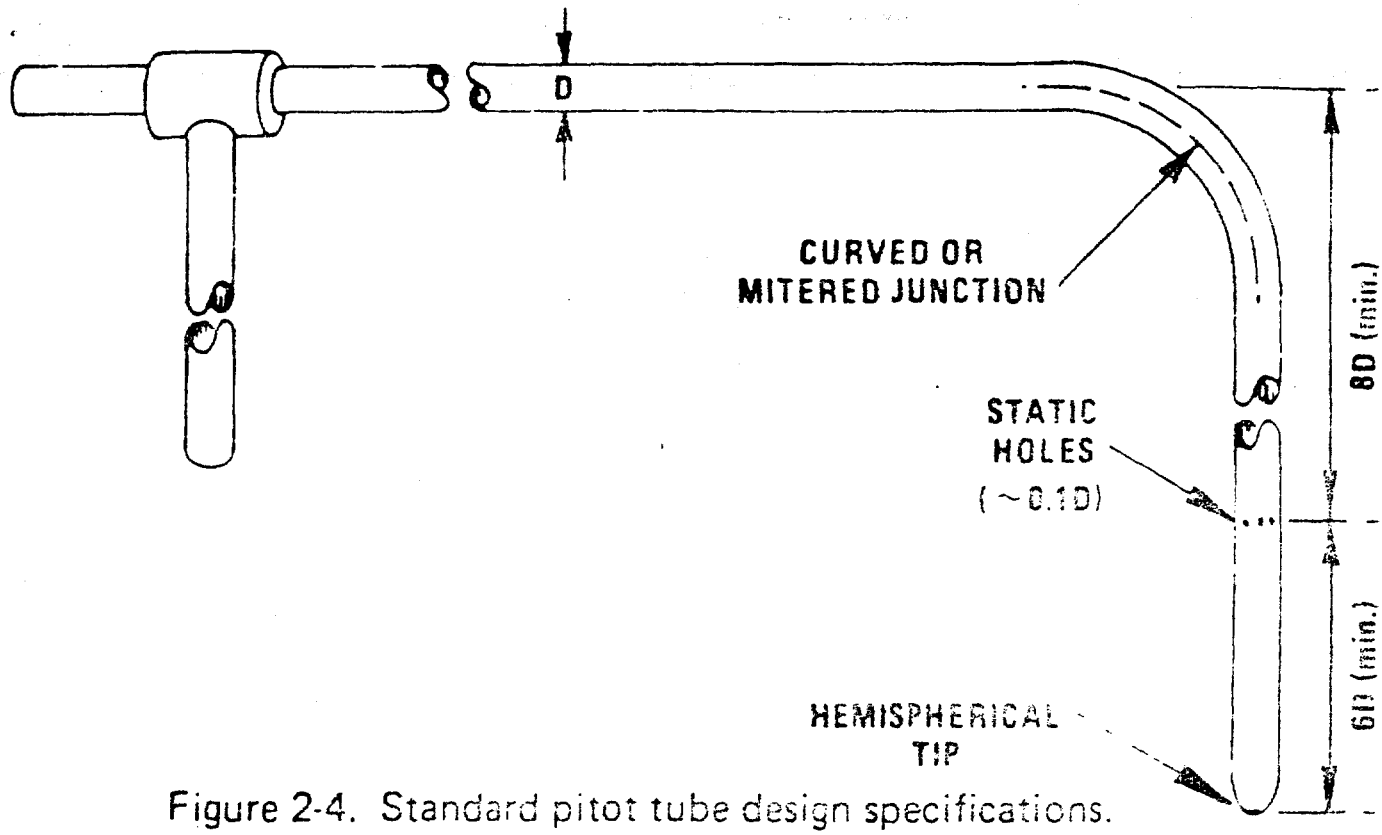

Figure 2-4. Standard pitot tube design specifications.

3. *Procedure*

3.1 Set up the apparatus as shown in Figure 2-1. Capillary tubing or surge tanks installed between the manometer and pitot tube may be used to dampen Δp fluctuations. It is recommended, but not required, that a pretest leak-check be conducted, as follows: (1) blow through the pitot impact opening until at least 7.6 cm (3 in.) H_2O velocity pressure registers on the manometer; then, close off the impact opening. The pressure shall remain stable for at least 15 seconds. (2) do the same for the static pressure side, except using suction to obtain the minimum of 7.6 cm (3 in.) H_2O. Other leak-check procedures, subject to the approval of the Administrator may be used.

3.2 Level and zero the manometer. Because the manometer level and zero may drift due to vibrations and temperature changes, make periodic checks during the traverse. Record all necessary data as shown in the example data sheet (Figure 2-5).

3.3 Measure the velocity head and temperature at the traverse points specified by Method 1. Ensure that the proper differential pressure gauge is being used for the range of Δp values encountered (see Section 2.2). If it is necessary to change to a more sensitive gauge, do so, and remeasure the Δp and temperature readings at each traverse point. Conduct a post-test leak-check (mandatory), as described in Section 3.1 above, to validate the traverse run.

3.4 Measure the static pressure in the stack. One reading is usually adequate.

3.5 Determine the atmospheric pressure.

3.6 Determine the stack gas dry molecular weight. For combustion processes or processes that emit essentially CO_2, O_2, CO, and N_2, use Method 3. For processes emitting essentially air, an analysis need not be conducted, use a dry molecular weight of 29.0. For other processes, other methods, subject to the approval of the Administrator, must be used.

3.7 Obtain the moisture content from Reference Method 4 (or equivalent) or from Method 5.

3.8 Determine the cross-sectional area of the stack or duct at the sampling location. Whenever possible, physically measure the stack dimensions rather than using blueprints.

4. *Calibration*

4.1 Type S Pitot Tube. Before its initial use, carefully examine the Type S pitot tube in top, side, and end views to verify that the face openings of the tube are aligned within the specifications illustrated in Figure 2-2 or 2-3. The pitot tube shall not be used if it fails to meet these alignment specifications.

After verifying the face opening alignment, measure and record the following dimensions of the pitot tube: (a) the external tubing diameter (dimension D_t, Figure 2-2b); and (b) the base-to-opening plane distances (dimensions P_a and P_b, Figure 2-2b). If D_t is between 0.48 and 0.95 cm (3/16 and 3/8 in.) and if P_a and P_b are equal and between 1.05 and 1.50 D_t, there are two possible options: (1) the pitot tube may be calibrated according to the procedure outlined in Sections 4.1.2 through 4.1.5 below, or (2) a baseline (isolated tube) coefficient value of 0.84 may be assigned to the pitot tube. Note, however, that if the pitot tube is part of an assembly, calibration may still be required, despite knowledge of the baseline coefficient value (see Section 4.1.1).

If D_t, P_a, and P_b are outside the specified limits, the pitot tube must be calibrated as outlined in 4.1.2 through 4.1.5 below.

4.1.1 Type S Pitot Tube Assemblies. During sample and velocity traverses, the isolated Type S pitot tube is not always used. In many instances, the pitot tube is used in combination with other source-sampling components (thermocouple, sampling probe, nozzle) as part of an "assembly." The presence of other sampling components can sometimes affect the baseline value of the Type S pitot tube coefficient (Citation 9 in Section 6); therefore an assigned (or otherwise known) baseline coefficient value may or may not be valid for a given assembly. The baseline and assembly coefficient values will be identical only when the relative placement of the components in the assembly is such that aerodynamic interference effects are eliminated. Figures 2-6 through 2-8 illustrate interference-free component arrangements for Type S pitot tubes having external tubing diameters between 0.48 and 0.95 cm (3/16 and 3/8 in.). Type S pitot tube assemblies that fail to meet any or all of the specifications of Figures 2-6 through 2-8 shall be calibrated according to the procedure outlined in Sections 4.1.2 through 4.1.5 below, and prior to calibration, the values of the intercomponent spacings (pitot-nozzle, pitot-thermocouple, pitot-probe sheath) shall be measured and recorded.

NOTE.—Do not use any Type S pitot tube assembly which is constructed such that the impact pressure opening plane of the pitot tube is below the entry plane of the nozzle (see Figure 2-6b).

4.1.2 Calibration Setup. If the Type S pitot tube is to be calibrated, one leg of the tube shall be permanently marked A, and the other, B. Calibration shall be done in a flow system having the following essential design features:

PLANT ____________________
DATE __________ RUN NO __________
STACK DIAMETER OR DIMENSIONS, m(in.) __________
BAROMETRIC PRESSURE, mm Hg (in. Hg) __________
CROSS SECTIONAL AREA, $m^2 (ft^2)$ __________
OPERATORS __________
PITOT TUBE I.D. NO. __________
AVG. COEFFICIENT, C_p = __________
LAST DATE CALIBRATED __________

SCHEMATIC OF STACK CROSS SECTION

Traverse Pt. No.	Vel. Hd., Δp mm (in.) H_2O	Stack Temperature		P_g mm Hg (in. Hg)	$\sqrt{\Delta p}$
		t_s, °C (°F)	T_s, °K (°R)		
		Average			

Figure 2.5. Velocity traverse data.

Reprinted from CFR Title 40 dated July 1980
pages 290-310

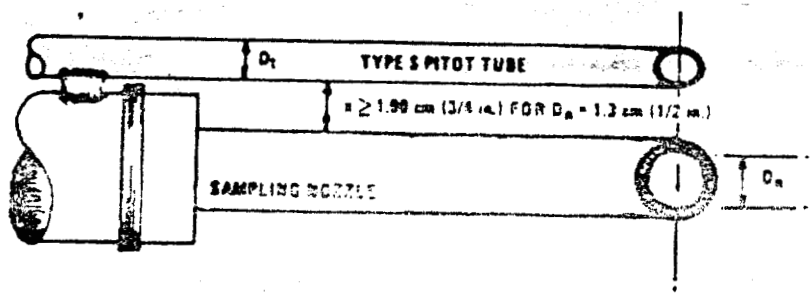

A. BOTTOM VIEW: SHOWING MINIMUM PITOT-NOZZLE SEPARATION.

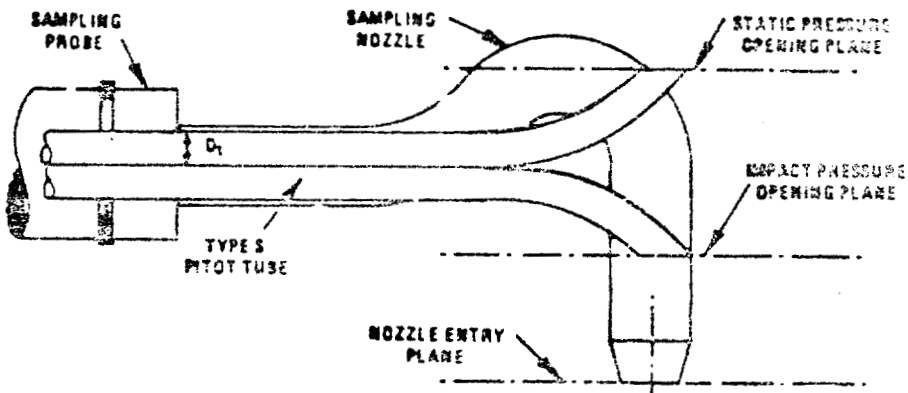

B. SIDE VIEW. TO PREVENT PITOT TUBE FROM INTERFERING WITH GAS FLOW STREAMLINES APPROACHING THE NOZZLE, THE IMPACT PRESSURE OPENING PLANE OF THE PITOT TUBE SHALL BE EVEN WITH OR ABOVE THE NOZZLE ENTRY PLANE.

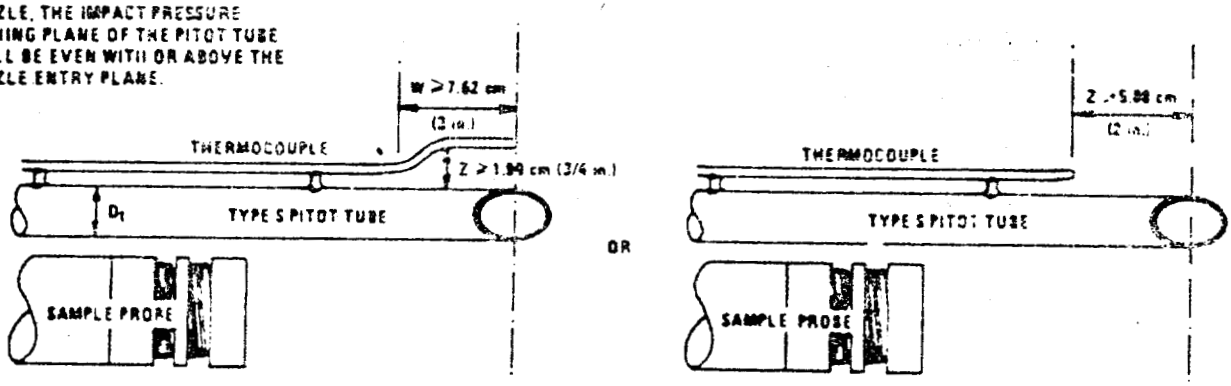

Figure 2.7 Proper thermocouple placement to prevent interference. D_t between 0.48 and 0.95 cm (3/16 and 3/8 in.).

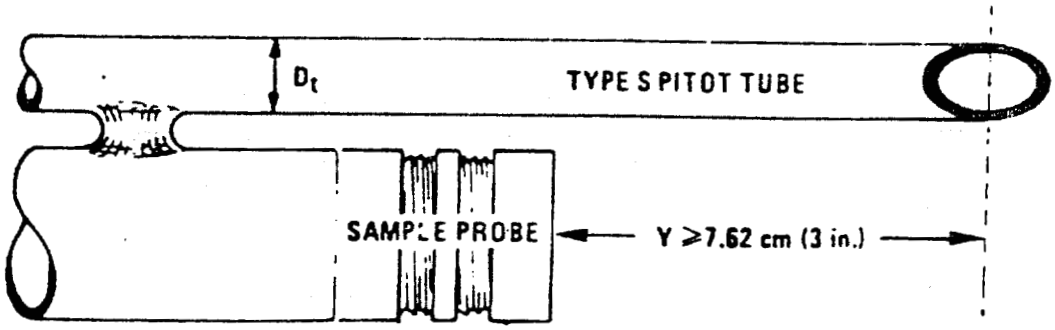

Figure 2-8. Minimum pitot-sample probe separation needed to prevent interference; D_t between 0.48 and 0.95 cm (3/16 and 3/8 in.).

Reprinted from CFR Title 40 dated July 1980

pages 290-310

4.1.2.1 The flowing gas stream must be confined to a duct of definite cross-sectional area, either circular or rectangular. For circular cross-sections, the minimum duct diameter shall be 30.5 cm (12 in.); for rectangular cross-sections, the width (shorter side) shall be at least 25.4 cm (10 in.).

4.1.2.2 The cross-sectional area of the calibration duct must be constant over a distance of 10 or more duct diameters. For a rectangular cross-section, use an equivalent diameter, calculated from the following equation, to determine the number of duct diameters.

$$D_e = \frac{2LW}{L+W}$$

Equation 2-1

where:
D_e = Equivalent diameter
L = Length
W = Width

To ensure the presence of stable, fully developed flow patterns at the calibration site, or "test section," the site must be located at least eight diameters downstream and two diameters upstream from the nearest disturbances.

NOTE—The eight- and two-diameter criteria are not absolute; other test section locations may be used (subject to approval of the Administrator), provided that the flow at the test site is stable and demonstrably parallel to the duct axis.

4.1.2.3 The flow system shall have the capacity to generate a test-section velocity around 915 m/min (3,000 ft/min). This velocity must be constant with time to guarantee steady flow during calibration. Note that Type S pitot tube coefficients obtained by single-velocity calibration at 915 m/min (3,000 ft/min) will generally be valid to within ±3 percent for the measurement of velocities above 305 m/min (1,000 ft/min) and to within ±5 to 6 percent for the measurement of velocities between 180 and 305 m/min (600 and 1,000 ft/min). If a more precise correlation between C_p and velocity is desired, the flow system shall have the capacity to generate at least four distinct, time-invariant test-section velocities covering the velocity range from 180 to 1,525 m/min (600 to 5,000 ft/min), and calibration data shall be taken at regular velocity intervals over this range (see Citations 9 and 14 in Section 6 for details).

4.1.2.4 Two entry ports, one each for the standard and Type S pitot tubes, shall be cut in the test section. the standard pitot entry port shall be located slightly downstream of the Type S port, so that the standard and Type S impact openings will lie in the same cross-sectional plane during calibration. To facilitate alignment of the pitot tubes during calibration, it is advisable that the test section be constructed of plexiglas or some other transparent material.

4.1.3 Calibration Procedure. Note that this procedure is a general one and must not be used without first referring to the special considerations presented in Section 4.1.5. Note also that this procedure applies only to single-velocity calibration. To obtain calibration data for the A and B sides of the Type S pitot tube, proceed as follows:

4.1.3.1 Make sure that the manometer is properly filled and that the oil is free from contamination and is of the proper density. Inspect and leak-check all pitot lines; repair or replace if necessary.

4.1.3.2 Level and zero the manometer. Turn on the fan and allow the flow to stabilize. Seal the Type S entry port.

4.1.3.3 Ensure that the manometer is level and zeroed. Position the standard pitot tube at the calibration point (determined as outlined in Section 4.1.5.1), and align the tube so that its tip is pointed directly into the flow. Particular care should be taken in aligning the tube to avoid yaw and pitch angles. Make sure that the entry port surrounding the tube is properly sealed.

4.1.3.4 Read Δp_{std} and record its value in a data table similar to the one shown in Figure 2-9. Remove the standard pitot tube from the duct and disconnect it from the manometer. Seal the standard entry port.

4.1.3.5 Connect the Type S pitot tube to the manometer. Open the Type S entry port. Check the manometer level and zero. Insert and align the Type S pitot tube so that its A side impact opening is at the same point as was the standard pitot tube and is pointed directly into the flow. Make sure that the entry port surrounding the tube is properly sealed.

4.1.3.6 Read Δp_s and enter its value in the data table. Remove the Type S pitot tube from the duct and disconnect it from the manometer.

4.1.3.7 Repeat steps 4.1.3.3 through 4.1.3.6 above until three pairs of Δp readings have been obtained.

4.1.3.8 Repeat steps 4.1.3.3 through 4.1.3.7 above for the B side of the Type S pitot tube.

4.1.3.9 Perform calculations, as described in Section 4.1.4 below.

4.1.4 Calculations.

4.1.4.1 For each of the six pairs of Δp readings (i.e., three from side A and three from side B) obtained in Section 4.1.3 above, calculate the value of the Type S pitot tube coefficient as follows:

PITOT TUBE IDENTIFICATION NUMBER _____ DATE _____

CALIBRATED BY _____

"A" SIDE CALIBRATION				
RUN NO	Δp_{std} cm H_2O (in H_2O)	$\Delta p_{(s)}$ cm H_2O (in H_2O)	$C_{p(s)}$	DEVIATION $C_{p(s)} - \bar{C}_p(A)$
1				
2				
3				
		$\bar{C}_p$ (SIDE A)		

"B" SIDE CALIBRATION				
RUN NO	Δp_{std} cm H_2O (in H_2O)	$\Delta p_{(s)}$ cm H_2O (in H_2O)	$C_{p(s)}$	DEVIATION $C_{p(s)} - \bar{C}_p(B)$
1				
2				
3				
		$\bar{C}_p$ (SIDE B)		

$$\text{AVERAGE DEVIATION} = \sigma(\text{A OR B}) = \frac{\sum_{1}^{3} \left| C_{p(s)} - \bar{C}_p(\text{A OR B}) \right|}{3} \longleftarrow \text{MUST BE} \leq 0.01$$

$$\left| \bar{C}_p(\text{SIDE A}) - \bar{C}_p(\text{SIDE B}) \right| \longleftarrow \text{MUST BE} \leq 0.01$$

Figure 2-9. Pitot tube calibration data.

Reprinted from CFR Title 40 dated July 1980
pages 290-310

$$C_{p(s)} = C_{p(std)} \sqrt{\frac{\Delta p_{std}}{\Delta p_s}}$$

Equation 2-2

where:

$C_{p(s)}$ = Type S pitot tube coefficient

$C_{p(std)}$ = Standard pitot tube coefficient; use 0.99 if the coefficient is unknown and the tube is designed according to the criteria of Sections 2.7.1 to 2.7.5 of this method.

Δp_{std} = Velocity head measured by the standard pitot tube, cm H_2O (in. H_2O)

Δp_s = Velocity head measured by the Type S pitot tube, cm H_2O (in H_2O)

4.1.4.2 Calculate C_p (side A), the mean A-side coefficient, and C_p (side B), the mean B-side coefficient; calculate the difference between these two average values.

4.1.4.3 Calculate the deviation of each of the three A-side values of $C_{p(s)}$ from C_p (side A), and the deviation of each B-side value of $C_{p(s)}$ from C_p (side B). Use the following equation:

$$\text{Deviation} = C_{p(s)} - \overline{C}_p(\text{A or B})$$

Equation 2-3

4.1.4.4 Calculate δ, the average deviation from the mean, for both the A and B sides of the pitot tube. Use the following equation:

$$\sigma\,(\text{side A or B}) = \frac{\sum_{1}^{3} |C_{p(s)} - \overline{C}_p(\text{A or B})|}{3}$$

Equation 2-4

4.1.4.5 Use the Type S pitot tube only if the values of δ (side A) and δ (side B) are less than or equal to 0.01 and if the absolute value of the difference between C_p (A) and C_p (B) is 0.01 or less.

4.1.5 Special considerations.

4.1.5.1 Selection of calibration point.

4.1.5.1.1 When an isolated Type S pitot tube is calibrated, select a calibration point at or near the center of the duct, and follow the procedures outlined in Sections 4.1.3 and 4.1.4 above. The Type S pitot coefficients so obtained, i.e., C_p (side A) and C_p (side B), will be valid, so long as either: (1) the isolated pitot tube is used; or 2) the pitot tube is used with other components (nozzle, thermocouple, sample probe) in an arrangement that is free from aerodynamic interference effects (see Figures 2-6 through 2-8).

4.1.5.1.2 For Type S pitot tube-thermocouple combinations (without sample probe), select a calibration point at or near the center of the duct, and follow the procedures outlined in Sections 4.1.3 and 4.1.4 above. The coefficients so obtained will be valid so long as the pitot tube-thermocouple combination is used by itself or with other components in an interference-free arrangement (Figures 2-6, and 2-8).

4.1.5.1.3 For assemblies with sample probes, the calibration point should be located at or near the center of the duct; however, insertion of a probe sheath into a small duct may cause significant cross-sectional area blockage and yield incorrect coefficient values (Citation 9 in Section 3). Therefore, to minimize the blockage effect, the calibration point may be a few inches off-center if necessary. The actual blockage effect will be negligible when the theoretical blockage, as determined by a projected-area model of the probe sheath, is 2 percent or less of the duct cross-sectional area for assemblies without external sheaths (Figure 2-10a), and 3 percent or less for assemblies with external sheaths (Figure 2-10b).

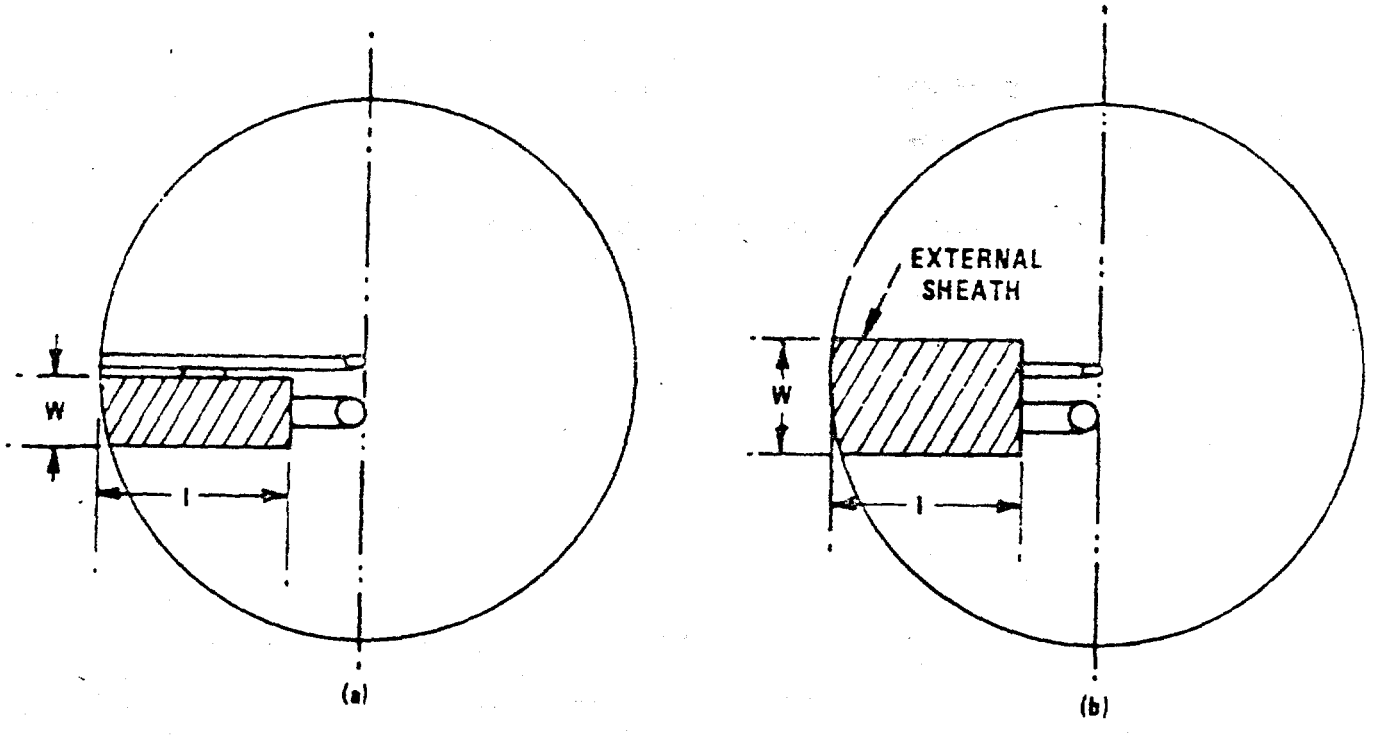

$$\text{ESTIMATED SHEATH BLOCKAGE (\%)} = \left[\frac{l \times W}{\text{DUCT AREA}}\right] \times 100$$

Figure 2-10. Projected-area models for typical pitot tube assemblies.

Reprinted from CFR Title 40 dated July 1980
pages 290-310

4.1.5.2 For those probe assemblies in which pitot tube-nozzle interference is a factor (i.e., those in which the pitot-nozzle separation distance fails to meet the specification illustrated in Figure 2-6a), the value of C_{pn} depends upon the amount of free-space between the tube and nozzle, and therefore is a function of nozzle size. In these instances, separate calibrations shall be performed with each of the commonly used nozzle sizes in place. Note that the single-velocity calibration technique is acceptable for this purpose, even though the larger nozzle sizes (>0.635 cm or ¼ in.) are not ordinarily used for isokinetic sampling at velocities around 915 m/min (3,000 ft/min), which is the calibration velocity; note also that it is not necessary to draw an isokinetic sample during calibration (see Citation 19 in Section 6).

4.1.5.3 For a probe assembly constructed such that its pitot tube is always used in the same orientation, only one side of the pitot tube need be calibrated (the side which will face the flow). The pitot tube must still meet the alignment specifications of Figure 2-2 or 2-3, however, and must have an average deviation (δ) value of 0.01 or less (see Section 4.1.4.4).

Figure 2-10. Projected-area models for typical pitot tube assemblies.

4.1.6 Field Use and Recalibration.

4.1.6.1 Field Use.

4.1.6.1.1 When a Type S pitot tube (isolated tube or assembly) is used in the field, the appropriate coefficient value (whether assigned or obtained by calibration) shall be used to perform velocity calculations. For calibrated Type S pitot tubes, the A side coefficient shall be used when the A side of the tube faces the flow, and the B side coefficient shall be used when the B side faces the flow; alternatively, the arithmetic average of the A and B side coefficient values may be used, irrespective of which side faces the flow.

4.1.6.1.2 When a probe assembly is used to sample a small duct (12 to 36 in. in diameter), the probe sheath sometimes blocks a significant part of the duct cross-section, causing a reduction in the effective value of C_{pn}. Consult Citation 9 in Section 6 for details. Conventional pitot-sampling probe assemblies are not recommended for use in ducts having inside diameters smaller than 12 inches (Citation 16 in Section 6).

4.1.6.2 Recalibration.

4.1.6.2.1 Isolated Pitot Tubes. After each field use, the pitot tube shall be carefully reexamined in top, side, and end views. If the pitot face openings are still aligned within the specifications illustrated in Figure 2-2 or 2-3, it can be assumed that the baseline coefficient of the pitot tube has not changed. If, however, the tube has been damanged to the extent that it no longer meets the specifications of Figure 2-2 or 2-3, the damage shall either be repaired to restore proper alignment of the face openings or the tube shall be discarded.

4.1.6.2.2 Pitot Tube Assemblies. After each field use, check the face opening alignment of the pitot tube, as in Section 4.1.6.2.1; also, remeasure the intercomponent spacings of the assembly. If the intercomponent spacings have not changed and the face opening alignment is acceptable, it can be assumed that the coefficient of the assembly has not changed. If the face opening alignment is no longer within the specifications of Figures 2-2 or 2-3, either repair the damage or replace the pitot tube (calibrating the new assembly, if necessary). If the intercomponent spacings have changed, restore the original spacings or recalibrate the assembly.

4.2 Standard pitot tube (if applicable). If a standard pitot tube is used for the velocity traverse, the tube shall be constructed according to the criteria of Section 2.7 and shall be assigned a baseline coefficient value of 0.99. If the standard pitot tube is used as part of an assembly, the tube shall be in an interference-free arrangement (subject to the approval of the Administrator).

4.3 Temperature Gauges. After each field use, calibrate dial thermometers, liquid-filled bulb thermometers, thermocouple-potentiometer systems, and other gauges at a temperature within 10 percent of the average absolute stack temperature. For temperatures up to 405°C (761°F), use an ASTM mercury-in-glass reference thermometer, or equivalent, as a reference; alternatively, either a reference thermocouple and potentiometer (calibrated by NBS) or thermometric fixed points, e.g., ice bath and boiling water (corrected for barometric pressure) may be used. For temperatures above 405°C (761°F), use an NBS-calibrated reference thermocouple-potentiometer system or an alternate reference, subject to the approval of the Administrator.

If, during calibration, the absolute temperatures measured with the gauge being calibrated and the reference gauge agree within 1.5 percent, the temperature data taken in the field shall be considered valid. Otherwise, the pollutant emission test shall either be considered invalid or adjustments (if appropriate) of the test results shall be made, subject to the approval of the Administrator.

4.4 Barometer. Calibrate the barometer used against a mercury barometer.

5. *Calculations*

Carry out calculations, retaining at least one extra decimal figure beyond that of the acquired data. Round off figures after final calculation.

5.1 Nomenclature.

A = Cross-sectional area of stack, m^2 (ft^2).

B_{ws} = Water vapor in the gas stream (from Method 5 or Reference Method 4), proportion by volume.

C_p = Pitot tube coefficient, dimensionless.

K_p = Pitot tube constant,

$$34.97 \frac{\text{m}}{\text{sec}} \left[\frac{(\text{g/g-mole})(\text{mm Hg})}{(^\circ\text{K})(\text{mm H}_2\text{O})} \right]^{1/2}$$

for the metric system and

$$85.49 \frac{\text{ft}}{\text{sec}} \left[\frac{(\text{lb/lb-mole})(\text{in. Hg})}{(^\circ\text{R})(\text{in. H}_2\text{O})} \right]^{1/2}$$

for the English system.

M_d = Molecular weight of stack gas, dry basis (see Section 3.6), g/g-mole (lb/lb-mole).

M_s = Molecular weight of stack gas, wet basis, g/g-mole (lb/lb-mole).

$= M_d(1 - B_{ws}) + 18.0\, B_{ws}$

Equation 2-5

P_{bar} = Barometric pressure at measurement site, mm Hg (in. Hg).

P_g = Stack static pressure, mm Hg (in. Hg).

P_s = Absolute stack gas pressure, mm Hg (in. Hg).

$= P_{bar} + P_g$

Equation 2-6

P_{std} = Standard absolute pressure, 760 mm Hg (29.92 in. Hg).

Q_{sd} = Dry volumetric stack gas flow rate corrected to standard conditions, dscm/hr (dscf/hr).

t_s = Stack temperature, °C (°F).

T_s = Absolute stack temperature, °K (°R).

$= 273 + t_s$ for metric

Equation 2-7

$= 460 + t_s$ for English

Equation 2-8

T_{std} = Standard absolute temperature, 293°K (528°R).

v_s = Average stack gas velocity, m/sec (ft/sec).

Δp = Velocity head of stack gas, mm H_2O (in. H_2O).

3,600 = Conversion factor, sec/hr.

18.0 = Molecular weight of water, g/g-mole (lb/lb-mole).

5.2 Average stack gas velocity.

$$v_s = K_p C_p (\sqrt{\Delta p})_{avg} \sqrt{\frac{T_{s(avg)}}{P_s M_s}}$$

Equation 2-9

5.3 Average stack gas dry volumetric flow rate.

$$Q_{sd} = 3{,}600\,(1 - B_{ws}) v_s A \left(\frac{T_{std}}{T_{s(avg)}}\right)\left(\frac{P_s}{P_{std}}\right)$$

Equation 2-10

6. *Bibliography*

1. Mark, L. S. Mechanical Engineers' Handbook. New York, McGraw-Hill Book Co., Inc. 1951.

2. Perry, J. H. Chemical Engineers' Handbook. New York, McGraw-Hill Book Co., Inc. 1960.

3. Shigehara, R. T., W. F. Todd, and W. S. Smith. Significance of Errors in Stack Sampling Measurements. U.S. Environmental Protection Agency, Research Triangle Park, N.C. (Presented at the Annual Meeting of the Air Pollution Control Association, St. Louis, Mo., June 14-19, 1970.)

4. Standard Method for Sampling Stacks for Particulate Matter. In: 1971 Book of ASTM Standards, Part 23. Philadelphia, Pa. 1971. ASTM Designation D-2928-71.

Reprinted from CFR Title 40 dated July 1980

pages 290-310

5. Vennard, J. K. Elementary Fluid Mechanics. New York. John Wiley and Sons, Inc. 1947.

6. Fluid Meters—Their Theory and Application. American Society of Mechanical Engineers, New York, N.Y. 1959.

7. ASHRAE Handbook of Fundamentals. 1972. p. 208.

8. Annual Book of ASTM Standards, Part 26. 1974. p. 648.

9. Vollaro, R. F. Guidelines for Type S Pitot Tube Calibration. U.S. Environmental Protection Agency. Research Triangle Park, N.C. (Presented at 1st Annual Meeting, Source Evaluation Society, Dayton, Ohio, September 18, 1975.)

10. Vollaro, R. F. A Type S Pitot Tube Calibration Study. U.S. Environmental Protection Agency. Emission Measurement Branch, Research Triangle Park, N.C. July 1974.

11. Vollaro, R. F. The Effects of Impact Opening Misalignment on the Value of the Type S Pitot Tube Coefficient. U.S. Environmental Protection Agency. Emission Measurement Branch, Research Triangle Park, N.C. October 1976.

12. Vollaro, R. F. Establishment of a Baseline Coefficient Value for Properly Constructed Type S Pitot Tubes. U.S. Environmental Protection Agency. Emission Measurement Branch, Research Triangle Park N.C. November 1976.

13. Vollaro, R. F. An Evaluation of Single-Velocity Calibration Technique as a Means of Determining Type S Pitot Tubes Coefficient. U.S. Environmental Protection Agency. Emission Measurement Branch, Research Triangle Park, N.C. August 1975.

14. Vollaro, R. F. The Use of Type S Pitot Tubes for the Measurement of Low Velocities. U.S. Environmental Protection Agency. Emission Measurement Branch, Research Triangle Park N.C. November 1976.

15. Smith, Marvin L. Velocity Calibration of EPA Type Source Sampling Probe. United Technologies Corporation, Pratt and Whitney Aircraft Division, East Hartford, Conn. 1975.

16. Vollaro, R. F. Recommended Procedure for Sample Traverses in Ducts Smaller than 12 Inches in Diameter. U.S. Environmental Protection Agency. Emission Measurement Branch, Research Triangle Park N.C. November 1976.

17. Ower, E. and R. C. Pankhurst. The Measurement of Air Flow, 4th Ed., London. Pergamon Press. 1966.

18. Vollaro, R. F. A Survey of Commercially Available Instrumentation for the Measurement of Low-Range Gas Velocities. U.S. Environmental Protection Agency, Emission Measurement Branch, Research Triangle Park N.C. November 1976. (Unpublished Paper)

19. Gnyp, A. W., C. C. St. Pierre, D. S. Smith, D. Mozzon, and J. Steiner. An Experimental Investigation of the Effect of Pitot Tube-Sampling Probe Configurations on the Magnitude of the S Type Pitot Tube Coefficient for Commercially Available Source Sampling Probes. Prepared by the University of Windsor for the Ministry of the Environment, Toronto, Canada. February 1975.

Reprinted from CFR Title 40 dated July 1980

pages 290-310

1. *Principle and Applicability*

1.1 Principle. A gas sample is extracted from a stack, by one of the following methods: (1) single-point, grab sampling; (2) single-point, integrated sampling; or (3) multi-point, integrated sampling. The gas sample is analyzed for percent carbon dioxide (CO_2), percent oxygen (O_2), and, if necessary, percent carbon monoxide (CO). If a dry molecular weight determination is to be made, either an Orsat or a Fyrite[1] analyzer may be used for the analysis; for excess air or emission rate correction factor determination, an Orsat analyzer must be used.

1.2 Applicability. This method is applicable for determining CO_2 and O_2 concentrations, excess air, and dry molecular weight of a sample from a gas stream of a fossil-fuel combustion process. The method may also be applicable to other processes where it has been determined that compounds other than CO_2, O_2, CO, and nitrogen (N_2) are not present in concentrations sufficient to affect the results.

Other methods, as well as modifications to the procedure described herein, are also applicable for some or all of the above determinations. Examples of specific methods and modifications include: (1) a multi-point sampling method using an Orsat analyzer to analyze individual grab samples obtained at each point; (2) a method using CO, or O_2 and stoichiometric calculations to determine dry molecular weight and excess air; (3) assigning a value of 30.0 for dry molecular weight, in lieu of actual measurements, for processes burning natural gas, coal, or oil. These methods and modifications may be used, but are subject to the approval of the Administrator, U.S. Environmental Protection Agency.

2. *Apparatus*

As an alternative to the sampling apparatus and systems described herein, other sampling systems (e.g., liquid displacement) may be used provided such systems are capable of obtaining a representative sample and maintaining a constant sampling rate, and are otherwise capable of yielding acceptable results. Use of such systems is subject to the approval of the Administrator.

2.1 Grab Sampling (Figure 3-1).

2.1.1 Probe. The probe should be made of stainless steel or borosilicate glass tubing and should be equipped with an in-stack or out-stack filter to remove particulate matter (a plug of glass wool is satisfactory for this purpose). Any other materials inert to O_2, CO_2, CO, and N_2 and resistant to temperature at sampling conditions may be used for the probe; examples of such material are aluminum, copper, quartz glass and Teflon.

2.1.2 Pump. A one-way squeeze bulb, or equivalent, is used to transport the gas sample to the analyzer.

2.2 Integrated Sampling (Figure 3-2).

2.2.1 Probe. A probe such as that described in Section 2.1.1 is suitable.

2.2.2 Condenser. An air-cooled or water-cooled condenser, or other condenser that will not remove O_2, CO_2, CO, and N_2, may be used to remove excess moisture which would interfere with the operation of the pump and flow meter.

2.2.3 Valve. A needle valve is used to adjust sample gas flow rate.

2.2.4 Pump. A leak-free, diaphragm-type pump, or equivalent, is used to transport sample gas to the flexible bag. Install a small surge tank between the pump and rate meter to eliminate the pulsation effect of the diaphragm pump on the rotameter.

2.2.5 Rate Meter. The rotameter, or equivalent rate meter, used should be capable of measuring flow rate to within ±2 percent of the selected flow rate. A flow rate range of 500 to 1000 cm^3/min is suggested.

2.2.6 Flexible Bag. Any leak-free plastic (e.g., Tedlar, Mylar, Teflon) or plastic-coated aluminum (e.g., aluminized Mylar) bag, or equivalent, having a capacity consistent with the selected flow rate and time length of the test run, may be used. A capacity in the range of 55 to 90 liters is suggested.

To leak-check the bag, connect it to a water manometer and pressurize the bag to 5 to 10 cm H_2O (2 to 4 in. H_2O). Allow to stand for 10 minutes. Any displacement in the water manometer indicates a leak. An alternative leak-check method is to pressurize the bag to 5 to 10 cm H_2O (2 to 4 in. H_2O) and allow to stand overnight. A deflated bag indicates a leak.

2.2.7 Pressure Gauge. A water-filled U-tube manometer, or equivalent, of about 30 cm (12 in.) is used for the flexible bag leak-check.

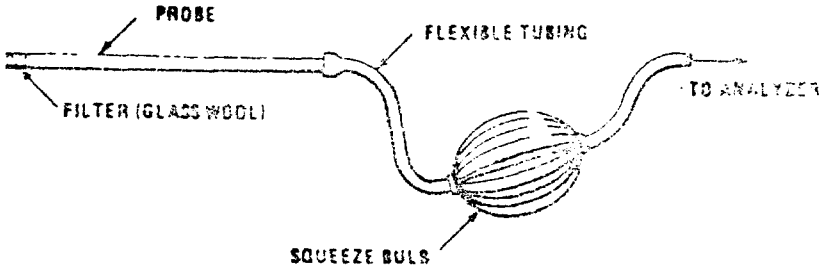

Figure 3-1. Grab sampling train.

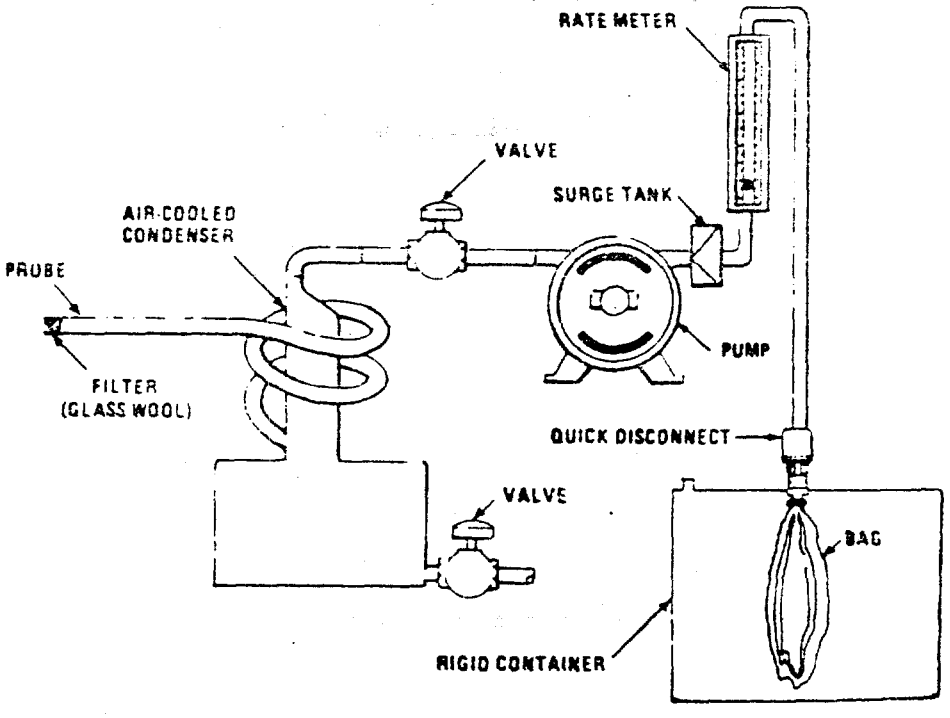

Figure 3-2. Integrated gas-sampling train.

[1] Mention of trade names or specific products does not constitute endorsement by the Environmental Protection Agency.

60-113 O—80——21

2.2.8 Vacuum Gauge. A mercury manometer, or equivalent, of at least 760 mm Hg (30 in. Hg) is used for the sampling train leak-check.

2.3 Analysis. For Orsat and Fyrite analyzer maintenance and operation procedures, follow the instructions recommended by the manufacturer, unless otherwise specified herein.

2.3.1 Dry Molecular Weight Determination. An Orsat analyzer or Fyrite type combustion gas analyzer may be used.

2.3.2 Emission Rate Correction Factor or Excess Air Determination. An Orsat analyzer must be used. For low CO_2 (less than 4.0 percent) or high O_2 (greater that 15.0 percent) concentrations, the measuring burette of the Orsat must have at least 0.1 percent subdivisions.

3. *Dry Molecular Weight Determination*

Any of the three sampling and analytical procedures described below may be used for determining the dry molecular weight.

3.1 Single-Point, Grab Sampling and Analytical Procedure.

3.1.1 The sampling point in the duct shall either be at the centroid of the cross section or at a point no closer to the walls than 1.00 m (3.3 ft), unless otherwise specified by the Administrator.

3.1.2 Set up the equipment as shown in Figure 3-1, making sure all connections ahead of the analyzer are tight and leak-free. If and Orsat analyzer is used, it is recommended that the analyzer be leaked-checked by following the procedure in Section 5; however, the leak-check is optional.

3.1.3 Place the probe in the stack, with the tip of the probe positioned at the sampling point; purge the sampling line. Draw a sample into the analyzer and immediately analyze it for percent CO_2 and percent O_2. Determine the percentage of the gas that is N_2 and CO by subtracting the sum of the percent CO_2 and percent O_2 from 100 percent. Calculate the dry molecular weight as indicated in Section 6.3.

3.1.4 Repeat the sampling, analysis, and calculation procedures, until the dry molecular weights of any three grab samples differ from their mean by no more than 0.3 g/g-mole (0.3 lb/lb-mole). Average these three molecular weights, and report the results to the nearest 0.1 g/g-mole (lb/lb-mole).

3.2 Single-Point, Integrated Sampling and Analytical Procedure.

3.2.1 The sampling point in the duct shall be located as specified in Section 3.1.1.

3.2.2 Leak-check (optional) the flexible bag as in Section 2.2.6. Set up the equipment as shown in Figure 3-2. Just prior to sampling, leak-check (optional) the train by placing a vacuum gauge at the condenser inlet, pulling a vacuum of at least 250 mm Hg (10 in. Hg), plugging the outlet at the quick disconnect, and then turning off the pump. The vacuum should remain stable for at least 0.5 minute. Evacuate the flexible bag. Connect the probe and place it in the stack, with the tip of the probe positioned at the sampling point; purge the sampling line. Next, connect the bag and make sure that all connections are tight and leak free.

3.2.3 Sample at a constant rate. The sampling run should be simultaneous with, and for the same total length of time as, the pollutant emission rate determination. Collection of at least 30 liters (1.00 ft^3) of sample gas is recommended; however, smaller volumes may be collected, if desired.

3.2.4 Obtain one integrated flue gas sample during each pollutant emission rate determination. Within 8 hours after the sample is taken, analyze it for percent CO_2 and percent O_2 using either an Orsat analyzer or a Fyrite-type combustion gas analyzer. If an Orsat analyzer is used, it is recommended that the Orsat leak-check described in Section 5 be performed before this determination; however, the check is optional. Determine the percentage of the gas that is N_2 and CO by subtracting the sum of the percent CO_2 and percent O_2 from 100 percent. Calculate the dry molecular weight as indicated in Section 6.3.

3.2.5 Repeat the analysis and calculation procedures until the individual dry molecular weights for any three analyses differ from their mean by no more than 0.3 g/g-mole (0.3 lb/lb-mole). Average these three molecular weights, and report the results to the nearest 0.1 g/g-mole (0.1 lb/lb-mole).

3.3 Multi-Point, Integrated Sampling and Analytical Procedure.

3.3.1 Unless otherwise specified by the Administrator, a minimum of eight traverse points shall be used for circular stacks having diameters less than 0.61 m (24 in.), a minimum of nine shall be used for rectangular stacks having equivalent diameters less than 0.61 m (24 in.), and a minimum of twelve traverse points shall be used for all other cases. The traverse points shall be located according to Method 1. The use of fewer points is subject to approval of the Administrator.

3.3.2 Follow the procedures outlined in sections 3.2.2 throught 3.2.5, except for the following: traverse all sampling points and sample at each point for an equal length of time. Record sampling data as shown in Figure 3-3.

4. *Emission Rate Correction Factor or Excess Air Determination*

NOTE.—A Fyrite-type combustion gas analyzer is not acceptable for excess air or emission rate correction factor determination unless approved by the Administrator. If both percent CO_2 and percent O_2 are measured, the analytical results of any of the three procedures given below may also be used for calculating the dry molecular weight.

Each of the three procedures below shall be used only when specified in an applicable subpart of the standards. The use of these procedures for other purposes must have specific prior approval of the Administrator.

4.1 Single-Point, Grab Sampling and Analytical Procedure.

4.1.1 The sampling point in the duct shall either be at the centroid of the cross section or at a point no closer to the walls than 1.00 m (3.3 ft), unless otherwise specified by the Administrator.

4.1.2 Set up the equipment as shown in Figure 3-1, making sure all connections ahead of the analyzer are tight and leak-free. Leak-check the Orsat analyzer according to the procedure described in Section 5. This leak-check is mandatory.

4.1.3 Place the probe in the stack, with the tip of the probe positioned at the sampling point; purge the sampling line. Draw a sample into the analyzer. For emission rate correction factor determination, immediately analyze the sample, as outlined in Sections 4.1.4 and 4.1.5, for percent CO_2 or percent O_2. If excess air is desired, proceed as follows: (1) immediately analyze the sample as in Sections 4.1.4 and 4.1.5, for percent CO_2, O_2, and CO; (2) determine the percentage of the gas that is N_2 by subtracting the sum of the percent CO_2, percent O_2, and percent CO from 100 percent; and (3) calculate percent excess air as outlined in Section 6.2.

TIME	TRAVERSE PT.	Q 1pm	% DEV.[a]
	AVERAGE		

$$^{a}\%\ DEV = \left(\frac{Q - Q_{avg}}{Q_{avg}}\right) 100 \qquad \text{(MUST BE} \leq 10\%)$$

Figure 3-3. Sampling rate data.

Reprinted from CFR Title 40 dated July 1980
pages 310 - 315

4.1.4 To insure complete absorption of the CO_2, O_2, or if applicable, CO, make repeated passes through each absorbing solution until two consecutive readings are the same. Several passes (three or four) should be made between readings. (If constant readings cannot be obtained after three consecutive readings, replace the absorbing solution.)

4.1.5 After the analysis is completed, leak-check (mandatory) the Orsat analyzer once again, as described in Section 5. For the results of the analysis to be valid, the Orsat analyzer must pass this leak test before and after the analysis. NOTE.—Since this single-point, grab sampling and analytical procedure in normally conducted in conjunction with a single-point, grab sampling and analytical procedure for a pollutant, only one analysis is ordinarily conducted. Therefore, great care must be taken to obtain a valid sample and analysis. Although in most cases only CO_2 or O_2 is required, it is recommended that both CO_2 and O_2 be measured, and that Citation 5 in the Bibliography be used to validate the analytical data.

4.2 Single-Point, Integrated Sampling and Analytical Procedure.

4.2.1 The sampling point in the duct shall be located as specified in Section 4.1.1.

4.2.2 Leak-check (mandatory) the flexible bag as in Section 2.2.6. Set up the equipment as shown in Figure 3-2. Just prior to sampling, leak-check (mandatory) the train by placing a vacuum gauge at the condenser inlet, pulling a vacuum of a least 250 mm Hg (10 in. Hg), plugging the outlet at the quick disconnect, and then turning off the pump. The vacuum shall remain stable for at least 0.5 minute. Evacuate the flexible bag. Connect the probe and place it in the stack, with the tip of the probe positioned at the sampling point; purge the sampling line. Next, connect the bag and make sure that all connections are tight and leak free.

4.2.3 Sample at a constant rate, or as specified by the Administrator. The sampling run must be simultaneous with, and for the same total lengh of time as, the pollutant emission rate determination. Collect at least 30 liters (1.00 ft^3) of sample gas. Smaller volumes may be collected, subject to approval of the Administrator.

4.2.4 Obtain one integrated flue gas sample during each pollutant emission rate determination. For emission rate correction factor determination, analyze the sample within 4 hours after it is taken for percent CO_2 or percent O_2 (as outlined in Sections 4.2.5 through 4.2.7). The Orsat analyzer must be leak-check (see Section 5) before the analysis. If excess air is desired, proceed as follows: (1) within 4 hours after the sample is taken, analyze it (as in Sections 4.2.5 through 4.2.7) for percent CO_2, O_2, and CO; (2) determine the percentage of the gas that is N_2 by subtracting the sum of the percent CO_2, percent O_2, and percent CO from 100 percent; (3) calculate percent excess air, as outlined in Section 6.2.

4.2.5 To insure complete absorption of the CO_2, O_2, or if applicable, CO make repeated passes through each absorbing solution until two consecutive readings are the same. Several passes (three of four) should be make between readings. (If constant readings cannot be obtained after three consecutive readings, replace the absorbing solution.)

4.2.6 Repeat the analysis until the following criteria are met:

4.2.6.1 For percent CO_2, repeat the analytical procedure until the results of any three analyses differ by no more that (a) 0.3 percent by volume when CO_2 is greater than 4.0 percent or (b) 0.2 percent by volume when CO_2 is less than or equal to 4.0 percent. Average the three acceptable values of percent CO_2 and report the results to the nearest 0.1 percent.

4.2.6.2 For percent O_2, repeat the analytical procedure until the results of any three analyses differ by no more than (a) 0.3 percent by volume when O_2 is less than 15.0 percent or (b) 0.2 percent by volume when O_2 is greater than or equal to 15.0 percent. Average the three acceptable values of percent O_2 and report the results to the nearest 0.1 percent.

4.2.6.3 For percent CO, repeat the analytical procedure until the results of any three analyses differ by no more than 0.3 percent. Average the three acceptable values of percent CO and report the results to the nearest 0.1 percent.

4.2.7 After the analysis is completed, leak-check (mandatory) the Orsat analyzer once again, as described in Section 5. For the results of the analysis to be valid, the Orsat analyzer must pass this leak test before an after the analysis. Note: Although in most instances only CO_2 or O_2 is required, it is recommended that both CO_2 and O_2 be measured, and that Citation 5 in the Bibliography be used to validate the analytical data.

4.3 Multi-Point, Integrated Sampling and Analytical Procedure.

4.3.1 Both the minimum number of sampling points and the sampling point location shall be as specified in Section 3.3.1 of this method. The use of fewer points than specified is subject to the approval of the Administrator.

4.3.2 Follow the procedures outlined in Sections 4.2.2 through 4.2.7, except for the following: Traverse all sampling points and sample at each point for an equal length of time. Record sampling data as shown in Figure 3-3.

5. *Leak-Check Procedure for Orsat Analyzers*

Moving an Orsat analyzer frequently causes it to leak. Therefore, an Orsat analyzer should be throughly leak-checked on site before the flue gas sample is introduced into it. The procedure for leak-checking an Orsat analyzer is:

5.1.1 Bring the liquid level in each pipette up to the reference mark on the capillary tubing and then close the pipette stopcock.

5.1.2 Raise the leveling bulb sufficiently to bring the confining liquid meniscus onto the graduated portion of the burette and then close the manifold stopcock.

5.1.3 Record the meniscus position.

5.1.4 Observe the menicus in the burette and the liquid level in the pipette for movement over the next 4 minutes.

5.1.5 For the Orsat analyzer to pass the leak-check, two conditions must be met.

5.1.5.1 The liquid level in each pipette must not fall below the bottom of the capillary tubing during this 4-minute interval.

5.1.5.2 The meniscus in the burette must not change by more than 0.2 ml during this 4-minute interval.

5.1.6 If the analyzer fails the leak-check procedure, all rubber connections and stopcocks should be checked until the cause of the leak is identified. Leaking stopcocks must be disassembled, cleaned, and regreased. Leaking rubber connections must be replaced. After the analyzer is reassembled, the leak-check procedure must be repeated.

6. *Calculations*

6.1 Nomenclature.

M_d = Dry molecular weight, g/g-mole (lb/lb-mole).
%EA = Percent excess air.
$\%CO_2$ = Percent CO_2 by volume (dry basis).
$\%O_2$ = Percent O_2 by volume (dry basis).
%CO = Percent CO by volume (dry basis).
$\%N_2$ = Percent N_2 by volume (dry basis)
0.264 = Ratio of O_2 to N_2 in air, v/v.
0.280 = Molecular weight of N_2 or CO, divided by 100.
0.320 = Molecular weight of O_2 divided by 100.
0.440 = Molecular weight of CO_2 divided by 100.

6.2 Percent Excess Air. Calculate the percent excess air (if applicable), by substituting the appropriate values of percent O_2, CO, and N_2 (obtained from Section 4.1.3 or 4.2.4) into Equation 3-1.

$$\%EA = \left[\frac{\%O_2 - 0.5\%CO}{0.264\%N_2 - (\%O_2 - 0.5\%CO)}\right]100$$

Equation 3-1

NOTE.—The equation above assumes that ambient air is used as the source of O_2 and that the fuel does not contain appreciable amounts of N_2 (as do coke oven or blast furnace gases). For those cases when appreciable amounts of N_2 are present (coal, oil, and natural gas do not contain appreciable amounts of N_2) or when oxygen enrichment is used, alternate methods, subject to approval of the Administrator, are required.

6.3 Dry Molecular Weight. Use Equation 3-2 to calculate the dry molecular weight of the stack gas

$$M_d = 0.440(\%CO_2) + 0.320(\%O_2) + 0.280(\%N_2 + \%CO)$$

Equation 3-2

NOTE.—The above equation does not consider argon in air (about 0.9 percent, molecularis weight of 37.7). A negative error of about 0.4 percent is introduced. The tester may opt to include argon in the analysis using procedures subject to approval of the Administrator.

7. *Bibliography*

1. Altshuller, A. P. Storage of Gases and Vapors in Plastic Bags. International Journal of Air and Water Pollution. 6:75-81. 1963.

2. Conner, William D. and J. S. Nader. Air Sampling with Plastice Bags. Journal of the American Industrial Hygiene Association. 25:291-297. 1964.

3. Burrell Manual for Gas Analysts. Seventh edition. Burrell Corporation, 2223 Fifth Avenue, Pittsburgh, Pa. 15219. 1951.

4. Mitchell, W. J. and M. R. Midgett. Field Reliability of the Orsat Analyzer. Journal of Air Pollution Control Association. 26:491-495. May 1976.

5. Shigehara, R. T., R. M. Neulicht, and W. S. Smith. Validating Orsat Analysis Data from Fossil Fuel-Fired Units. Stack Sampling News. 4(2):21-26. August, 1976.

Reprinted from CFR Title 40 dated July 1980

pages 310 - 315

1. *Principle and Applicability*

1.1 Principle. A gas sample is extracted at a constant rate from the source; moisture is removed from the sample stream and determined either volumetrically or gravimetrically.

1.2 Applicability. This method is applicable for determining the moisture content of stack gas.

Two procedures are given. The first is a reference method, for accurate determinations of moisture content (such as are needed to calculate emission data). The second is an approximation method, which provides estimates of percent moisture to aid in setting isokinetic sampling rates prior to a pollutant emission measurement run. The approximation method described herein is only a suggested approach; alternative means for approximating the moisture content, e.g., drying tubes, wet bulb-dry bulb techniques, condensation techniques, stoichiometric calculations, previous experience, etc., are also acceptable.

The reference method is often conducted simultaneously with a pollutant emission measurement run; when it is, calculation of percent isokinetic, pollutant emission rate, etc., for the run shall be based upon the results of the reference method or its equivalent; these calculations shall not be based upon the results of the approximation method, unless the approximation method is shown, to the satisfaction of the Administrator, U.S. Environmental Protection Agency, to be capable of yielding results within 1 percent H_2O of the reference method.

NOTE.—The reference method may yield questionable results when applied to saturated gas streams or to streams that contain water droplets. Therefore, when these conditions exist or are suspected, a second determination of the moisture content shall be made simultaneously with the reference method, as follows: Assume that the gas stream is saturated. Attach a temperature sensor (capable of measuring to ±1° C (2° F)) to the reference method probe. Measure the stack gas temperature at each traverse point (see Section 2.2.1) during the reference method traverse; calculate the average stack gas temperature. Next, determine the moisture percentage, either by: (1) using a psychrometric chart and making appropriate corrections if stack pressure is different from that of the chart, or (2) using saturation vapor pressure tables. In cases where the pyschrometric chart or the saturation vapor pressure tables are not applicable (based on evaluation of the process), alternate methods, subject to the approval of the Administrator, shall be used.

2. *Reference Method*

The procedure described in Method 5 for determining moisture content is acceptable as a reference method.

2.1 Apparatus. A schematic of the sampling train used in this reference method is shown in Figure 4-1. All components shall be maintained and calibrated according to the procedure outlined in Method 5.

2.1.1 Probe. The probe is constructed of stainless steel or glass tubing, sufficiently heated to prevent water condensation, and is equipped with a filter, either in-stack (e.g., a plug of glass wool inserted into the end of the probe) or heated out-stack (e.g., as described in Method 5), to remove particulate matter.

When stack conditions permit, other metals or plastic tubing may be used for the probe, subject to the approval of the Administrator.

2.1.2 Condenser. The condenser consists of four impingers connected in series with ground glass, leak-free fittings or any similarly leak-free non-contaminating fittings. The first, third, and fourth impingers shall be of the Greenburg-Smith design, modified by replacing the tip with a 1.3 centimeter (½ inch) ID glass tube extending to about 1.3 cm (½ in.) from the bottom of the flask. The second impinger shall be of the Greenburg-Smith design with the standard tip. Modifications (e.g., using flexible connections between the impingers, using materials other than glass, or using flexible vacuum lines to connect the filter holder to the condenser) may be used, subject to the approval of the Administrator.

The first two impingers shall contain known volumes of water, the third shall be empty, and the fourth shall contain a known weight of 6- to 16-mesh indicating type silica gel, or equivalent desiccant. If the silica gel has been previously used, dry at 175° C (350° F) for 2 hours. New silica gel may be used as received. A thermometer, ca-

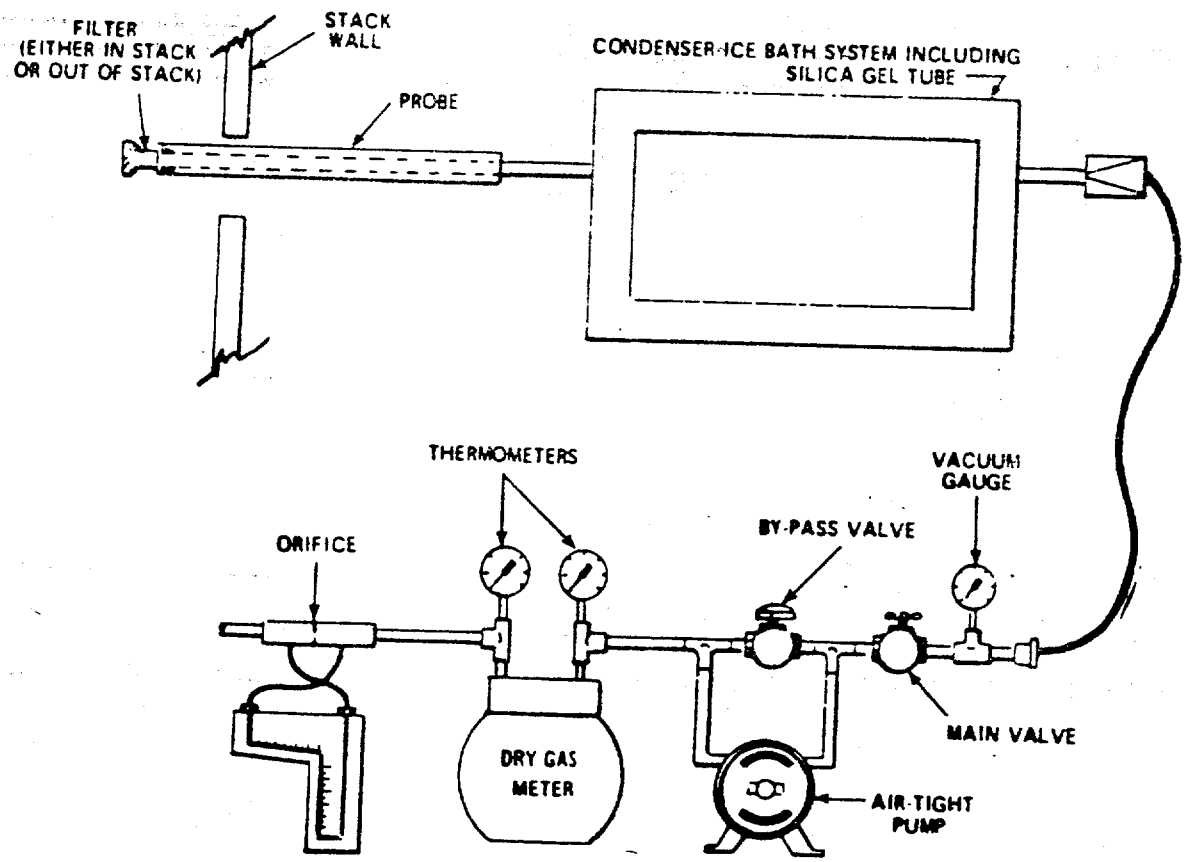

Figure 4-1. Moisture sampling train-reference method

Reprinted from CFR Title-40 dated July 1980
Pages 315 - 325

pable of measuring temperature to within 1° C (2° F), shall be placed at the outlet of the fourth impinger, for monitoring purposes.

Alternatively, any system may be used (subject to the approval of the Administrator) that cools the sample gas stream and allows measurement of both the water that has been condensed and the moisture leaving the condenser, each to within 1 ml or 1 g. Acceptable means are to measure the condensed water, either gravimetrically or volumetrically, and to measure the moisture leaving the condenser by: (1) monitoring the temperature and pressure at the exit of the condenser and using Dalton's law of partial pressures, or (2) passing the sample gas stream through a tared silica gel (or equivalent desiccant) trap, with exit gases kept below 20° C (68° F), and determining the weight gain.

If means other than silica gel are used to determine the amount of moisture leaving the condenser, it is recommended that silica gel (or equivalent) still be used between the condenser system and pump, to prevent moisture condensation in the pump and metering devices and to avoid the need to make corrections for moisture in the metered volume.

2.1.3 Cooling System. An ice bath container and crushed ice (or equivalent) are used to aid in condensing moisture.

2.1.4 Metering System. This system includes a vacuum gauge, leak-free pump, thermometers capable of measuring temperature to within 3° C (5.4° F), dry gas meter capable of measuring volume to within 2 percent, and related equipment as shown in Figure 4-1. Other metering systems, capable of maintaining a constant sampling rate and determining sample gas volume, may be used, subject to the approval of the Administrator.

2.1.5 Barometer. Mercury, aneroid, or other barometer capable of measuring atmospheric pressure to within 2.5 mm Hg (0.1 in. Hg) may be used. In many cases, the barometric reading may be obtained from a nearby national weather service station, in which case the station value (which is the absolute barometric pressure) shall be requested and an adjustment for elevation differences between the weather station and the sampling point shall be applied at a rate of minus 2.5 mm Hg (0.1 in. Hg) per 30 m (100 ft) elevation increase or vice versa for elevation decrease.

2.1.6 Graduated Cylinder and/or Balance. These items are used to measure condensed water and moisture caught in the silica gel to within 1 ml or 0.5 g. Graduated cylinders shall have subdivisions no greater than 2 ml. Most laboratory balances are capable of weighing to the nearest 0.5 g or less. These balances are suitable for use here.

2.2 Procedure. The following procedure is written for a condenser system (such as the impinger system described in Section 2.1.2) incorporating volumetric analysis to measure the condensed moisture, and silica gel and gravimetric analysis to measure the moisture leaving the condenser.

2.2.1 Unless otherwise specified by the Administrator, a minimum of eight traverse points shall be used for circular stacks having diameters less than 0.61 m (24 in.), a minimum of nine points shall be used for rectangular stacks having equivalent diameters less than 0.61 m (24 in.), and a minimum of twelve traverse points shall be used in all other cases. The traverse points shall be located according to Method 1. The use of fewer points is subject to the approval of the Administrator. Select a suitable probe and probe length such that all traverse points can be sampled. Consider sampling from opposite sides of the stack (four total sampling ports) for large stacks, to permit use of shorter probe lengths. Mark the probe with heat resistant tape or by some other method to denote the proper distance into the stack or duct for each sampling point. Place known volumes of water in the first two impingers. Weigh and record the weight of the silica gel to the nearest 0.5 g, and transfer the silica gel to the fourth impinger; alternatively, the silica gel may first be transferred to the impinger, and the weight of the silica gel plus impinger recorded.

2.2.2 Select a total sampling time such that a minimum total gas volume of 0.60 scm (21 scf) will be collected, at a rate no greater than 0.021 m³/min (0.75 cfm). When both moisture content and pollutant emission rate are to be determined, the moisture determination shall be simultaneous with, and for the same total length of time as, the pollutant emission rate run, unless otherwise specified in an applicable subpart of the standards.

2.2.3 Set up the sampling train as shown in Figure 4-1. Turn on the probe heater and (if applicable) the filter heating system to temperatures of about 120° C (248° F), to prevent water condensation ahead of the condenser; allow time for the temperatures to stabilize. Place crushed ice in the ice bath container. It is recommended, but not required, that a leak check be done, as follows: Disconnect the probe from the first impinger or (if applicable) from the filter holder. Plug the inlet to the first impinger (or filter holder) and pull a 380 mm (15 in.) Hg vacuum; a lower vacuum may be used, provided that it is not exceeded during the test. A leakage rate in excess of 4 percent of the average sampling rate or 0.00057 m³/min (0.02 cfm), whichever is less, is unacceptable. Following the leak check, reconnect the probe to the sampling train.

2.2.4 During the sampling run, maintain a sampling rate within 10 percent of constant rate, or as specified by the Administrator. For each run, record the data required on the example data sheet shown in Figure 4-2. Be sure to record the dry gas meter reading at the beginning and end of each sampling time increment and whenever sampling is halted. Take other appropriate readings at each sample point, at least once during each time increment.

2.2.5 To begin sampling, position the probe tip at the first traverse point. Immediately start the pump and adjust the flow to the desired rate. Traverse the cross section, sampling at each traverse point for an equal length of time. Add more ice and, if necessary, salt to maintain a temperature of less 20° C (68° F) at the silica gel outlet.

2.2.6 After collecting the sample, disconnect the probe from the filter holder (or from the first impinger) and conduct a leak check (mandatory) as described in Section 2.2.3. Record the leak rate. If the leakage rate exceeds the allowable rate, the tester shall either reject the test results or shall correct the sample volume as in Section 6.3 of Method 5. Next, measure the volume of the moisture condensed to the nearest ml. Determine the increase in weight of the silica gel (or silica gel plus impinger) to the nearest 0.5 g. Record this information (see example data sheet, Figure 4-3) and calculate the moisture percentage, as described in 2.3 below.

2.3 Calculations. Carry out the following calculations, retaining at least one extra decimal figure beyond that of the acquired data. Round off figures after final calculation.

	IMPINGER VOLUME ml	SILICA GEL WEIGHT g
FINAL		
INITIAL		
DIFFERENCE		

Figure 4-3. Analytical data—reference method

2.3.1 Nomenclature.

B_{ws} = Proportion of water vapor, by volume, in the gas stream.

M_w = Molecular weight of water, 18.0 g/g-mole (18.0 lb/lb-mole).

P_m = Absolute pressure (for this method, same as barometric pressure) at the dry gas meter, mm Hg (in. Hg).

P_{std} = Standard absolute pressure, 760 mm Hg (29.92 in. Hg).

R = Ideal gas constant, 0.06236 (mm Hg)(m³)/(g-mole)(°K) for metric units and 21.85 (in. Hg)(ft³)/(lb-mole)(°R) for English units.

T_m = Absolute temperature at meter, °K (°R).

T_{std} = Standard absolute temperature, 293° K (528°R).

V_m = Dry gas volume measured by dry gas meter, dcm (dcf).

ΔV_m = Incremental dry gas volume measured by dry gas meter at each traverse point, dcm (dcf).

$V_{m(std)}$ = Dry gas volume measured by the dry gas meter, corrected to standard conditions, dscm (dscf).

$V_{w(std)}$ = Volume of water vapor condensed corrected to standard conditions, scm (scf).

$V_{wsg(std)}$ = Volume of water vapor collected in silica gel corrected to standard conditions, scm (scf).

V_f = Final volume of condenser water, ml.

V_i = Initial volume, if any, of condenser water, ml.

W_f = Final weight of silica gel or silica gel plus impinger, g.

W_i = Initial weight of silica gel or silica gel plus impinger, g.

Y = Dry gas meter calibration factor.

ρ_w = Density of water, 0.9982 g/ml (0.002201 lb/ml).

2.3.2 Volume of water vapor condensed.

$$V_{w(std)} = \frac{(V_f - V_i)\rho_w R T_{std}}{P_{std} M_w} = K_1 (V_f - V_i)$$

Equation 4-1

where:
$K_1 = 0.001333$ m³/ml for metric units
$= 0.04707$ ft³/ml for English units

2.3.3 Volume of water vapor collected in silica gel.

$$V_{wsg(std)} = \frac{(W_f - W_i) R T_{std}}{P_{std} M_w} = K_2 (W_f - W_i)$$

Equation 4-2

where:
$K_2 = 0.001335$ m³/g for metric units
$= 0.04715$ ft³/g for English units

2.3.4 Sample gas volume.

$$V_{m(std)} = V_m Y \frac{(P_m)(T_{std})}{(P_{std})(T_m)} = K_3 Y \frac{V_m P_m}{T_m}$$

Equation 4-3

where:
$K_3 = 0.3858$ °K/mm Hg for metric units
$= 17.64$ °R/in. Hg for English units

NOTE.—If the post-test lead rate (Section 2.2.6) exceeds the allowable rate, correct the value of V_m in Equation 4-3, as described in Section 5.3 of Method 5.

2.3.5 Moisture Content.

$$B_{ws} = \frac{V_{wc(std)} + V_{wsg(std)}}{V_{wc(std)} + V_{wsg(std)} + V_{m(std)}}$$

Equation 4-4

NOTE.—In saturated or moisture droplet-laden gas streams, two calculations of the moisture content of the stack gas shall be made, one using a value based upon the saturated conditions (see Section 1.2), and another based upon the results of the impinger analysis. The lower of these two values of B_{ws} shall be considered correct.

2.3.6 Verification of constant sampling rate. For each time increment, determine the ΔV_m. Calculate the average. If the value for any time increment differs from the average by more than 10 percent, reject the results and repeat the run.

3. *Approximation Method*

The approximation method described below is presented only as a suggested method (see Section 1.2).

3.1 Apparatus.

3.1.1 Probe. Stainless steel glass tubing, sufficiently heated to prevent water condensation and equipped with a filter (either in-stack or heated out-stack) to remove particulate matter. A plug of glass wool, inserted into the end of the probe, is a satisfactory filter.

3.1.2 Impingers. Two midget impingers, each with 30 ml capacity, or equivalent.

3.1.3 Ice Bath. Container and ice, to aid in condensing moisture in impingers.

PLANT _____
LOCATION _____
OPERATOR _____
DATE _____
RUN NO _____
AMBIENT TEMPERATURE _____
BAROMETRIC PRESSURE _____
PROBE LENGTH m(ft) _____

SCHEMATIC OF STACK CROSS SECTION

TRAVERSE POINT NUMBER	SAMPLING TIME (θ), min	STACK TEMPERATURE °C (°F)	PRESSURE DIFFERENTIAL ACROSS ORIFICE METER (ΔH) mm(in.) H_2O	METER READING GAS SAMPLE VOLUME m³ (ft³)	ΔV_m m³ (ft³)	GAS SAMPLE TEMPERATURE AT DRY GAS METER		TEMPERATURE OF GAS LEAVING CONDENSER OR LAST IMPINGER, °C (°F)
						INLET ($T_{m_{in}}$) °C (°F)	OUTLET ($T_{m_{out}}$) °C (°F)	
TOTAL						Avg.	Avg.	
AVERAGE						Avg.		

Figure 4 2. Field moisture determination-reference method.

Reprinted from CFR Title 40 dated July 1980
pages 315 - 325

3.1.4 Drying Tube. Tube packed with new or regenerated 6- to 16-mesh indicating-type silica gel (or equivalent desiccant), to dry the sample gas and to protect the meter and pump.

3.1.5 Valve. Needle valve, to regulate the sample gas flow rate.

3.1.6 Pump. Leak-free, diaphragm type, or equivalent, to pull the gas sample through the train.

3.1.7 Volume Meter. Dry gas meter, sufficiently accurate to measure the sample volume within 2%, and calibrated over the range of flow rates and conditions actually encountered during sampling.

3.1.8 Rate Meter. Rotameter, to measure the flow range from 0 to 3 lpm (0 to 0.11 cfm).

3.1.9 Graduated Cylinder. 25 ml.

3.1.10 Barometer. Mercury, aneroid, or other barometer, as described in Section 2.1.5 above.

3.1.11 Vacuum Gauge. At least 760 mm Hg (30 in. Hg) gauge, to be used for the sampling leak check.

3.2 Procedure.

3.2.1 Place exactly 5 ml distilled water in each impinger.

Leak check the sampling train as follows: Temporarily insert a vacuum gauge at or near the probe inlet; then, plug the probe inlet and pull a vacuum of at least 250 mm Hg (10 in. Hg). Note, the time rate of change of the dry gas meter dial; alternatively, a rotameter (0-40 cc/min) may be temporarily attached to the dry gas meter outlet to determine the leakage rate. A leak rate not in excess of 2 percent of the average sampling rate is acceptable.

NOTE.—Carefully release the probe inlet plug before turning off the pump.

3.2.2 Connect the probe, insert it into the stack, and sample at a constant rate of 2 lpm (0.071 cfm). Continue sampling until the dry gas meter registers about 30 liters (1.1 ft³) or until visible liquid droplets are carried over from the first impinger to the second. Record temperature, pressure, and dry gas meter readings as required by Figure 4-5.

3.2.3 After collecting the sample, combine the contents of the two impingers and measure the volume to the nearest 0.5 ml.

3.3 Calculations. The calculation method presented is designed to estimate the moisture in the stack gas; therefore, other data, which are only necessary for accurate moisture determinations, are not collected. The following equations adequately estimate the moisture content, for the purpose of determining isokinetic sampling rate settings.

3.3.1 Nomenclature.

B_{wo} = Approximate proportion, by volume of water vapor in the gas stream leavin the second impinger, 0.025.

B_{ws} = Water vapor in the gas stream, propo tion by volume.

M_w = Molecular weight of water, 18.0 g/ mole (18.0 lb/lb-mole).

P_m = Absolute pressure (for this metho same as barometric pressure) at the dr gas meter.

P_{std} = Standard absolute pressure, 760 m Hg (29.92 in. Hg).

R = Ideal gas constant, 0.06236 (mm Hg (m³)/(g-mole) (°K) for metric units an 21.85 (in. Hg) (ft³)/lb-mole) (°R) for En lish units.

T_m = Absolute temperature at meter, °K (°R

T_{std} = Standard absolute temperature, 293° (528° R).

V_f = Final volume of impinger contents, ml.

V_i = Initial volume of impinger contents, m

V_m = Dry gas volume measured by dry g meter, dcm (dcf).

$V_{m(std)}$ = Dry gas volume measured by dry g meter, corrected to standard condition dscm (dscf).

$V_{w(std)}$ = Volume of water vapor condense corrected to standard conditions, sc (scf).

ρ_w = Density of water, 0.9982 g/ml (0.0022 lb/ml).

Y = Dry gas meter calibration factor.

3.3.2 Volume of water vapor collected.

where:

$$V_{w(std)} = \frac{(V_f - V_i)\rho_w R T_{std}}{P_{std} M_w} = K_1 (V_f - V_i)$$

Equation 4-5

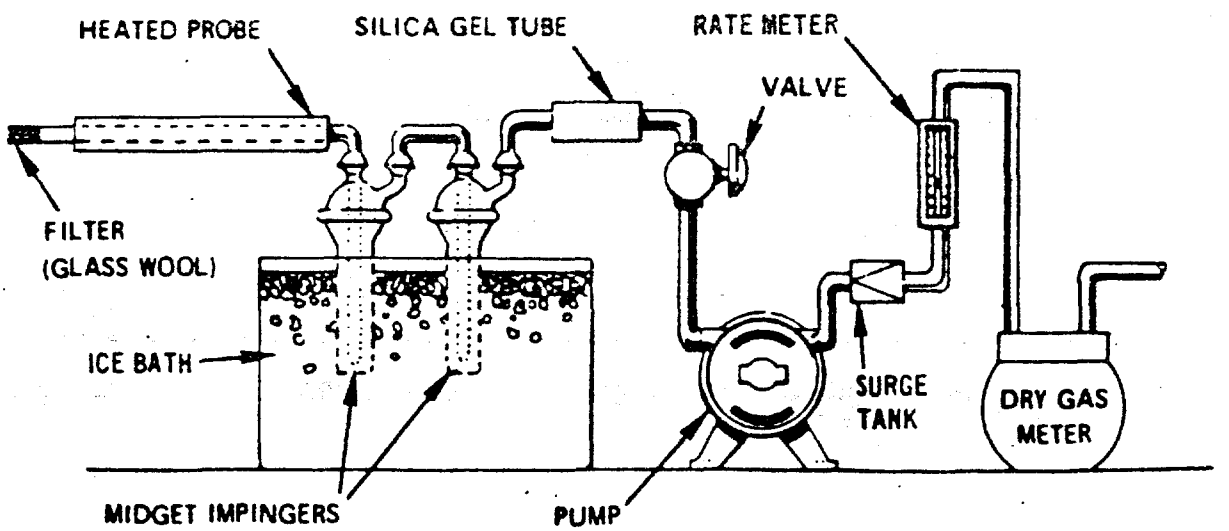

Figure 4-4. Moisture-sampling train - approximation method.

Reprinted from CFR Title 40 dated July 1980
pages 315 - 325

LOCATION _____ COMMENTS

TEST _____

DATE _____

OPERATOR _____

BAROMETRIC PRESSURE _____

CLOCK TIME	GAS VOLUME THROUGH METER, (Vm), m^3 (ft^3)	RATE METER SETTING m^3/min. (ft^3/min.)	METER TEMPERATURE, °C (°F)

Figure 4-5. Field moisture determination - approximation method.

$K_1 = 0.001333$ m^3/ml for metric units
$= 0.04707$ ft^3/ml for English units.

3.3.3 Gas volume.

$$V_{m(std)} = V_m \left(\frac{P_m}{P_{std}}\right)\left(\frac{T_{std}}{T_m}\right)$$
$$= K_2 \frac{V_m P_m}{T_m}$$

Equation 4-6

where:
$K_2 = 0.3858$ °K/mm Hg for metric units
$= 17.64$ °R/in. Hg for English units

3.3.4 Approximate moisture content.

$$B_{ws} = \frac{V_{wc}}{V_{wc} + V_{m(std)}} + B_{wm}$$
$$= \frac{V_{wc}}{V_{wc} + V_{m(std)}} + (0.025)$$

Equation 4-7

4. *Calibration*

4.1 For the reference method, calibrate equipment as specified in the following sections of Method 5: Section 5.3 (metering system); Section 5.5 (temperature gauges); and Section 5.7 (barometer). The recommended leak check of the metering system (Section 5.6 of Method 5) also applies to the reference method. For the approximation method, use the procedures outlined in Section 5.1.1 of Method 6 to calibrate the metering system, and the procedure of Method 5, Section 5.7 to calibrate the barometer.

5. *Bibliography*

1. Air Pollution Engineering Manual (Second Edition). Danielson, J. A. (ed.). U.S. Environmental Protection Agency, Office of Air Quality Planning and Standards, Research Triangle Park, N.C. Publication No. AP-40. 1973.

2. Devorkin, Howard, et al. Air Pollution Source Testing Manual. Air Pollution Control District, Los Angeles, Calif. November, 1963.

3. Methods for Determination of Velocity, Volume Dust and Mist Content of Gases. Western Precipitation Division of Joy Manufacturing Co., Los Angeles, Calif. Bulletin WP-50. 1968.

Reprinted from CFR Title 40 dated July 1980

pages 315 - 325

The Almega Corporation

1. *Principle and Applicability*

1.1 Principle. Particulate matter is withdrawn isokinetically from the source and collected on a glass fiber filter maintained at a temperature in the range of 120±14° C (248±25° F) or such other temperature as specified by an applicable subpart of the standards or approved by Administrator, U.S. Environmental Protection Agency, for a particular application. The particulate mass, which includes any material that condenses at or above the filtration temperature, is determined gravimetrically after removal of uncombined water.

1.2 Applicability. This method is applicable for the determination of particulate emissions from stationary sources.

2. *Apparatus*

2.1 Sampling Train. A schematic of the sampling train used in this method is shown in Figure 5-1. Complete construction details are given in APTD-0581 (Citation 2 in Section 7); commercial models of this train are also available. For changes from APTD-0581 and for allowable modifications of the train shown in Figure 5-1, see the following subsections.

The operating and maintenance procedures for the sampling train are described in APTD-0576 (Citation 3 in Section 7). Since correct usage is important in obtaining valid results, all users should read APTD-0576 and adopt the operating and maintenance procedures outlined in it, unless otherwise specified herein. The sampling train consists of the following components:

2.1.1 Probe Nozzle. Stainless steel (316) or glass with sharp, tapered leading edge. The angle of taper shall be 30° and the taper shall be on the outside to preserve a constant internal diameter. The probe nozzle shall be of the button-hook or elbow design, unless otherwise specified by the Administrator. If made of stainless steel, the nozzle shall be constructed from seamless tubing; other materials of construction may be used, subject to the approval of the Administrator.

A range of nozzle sizes suitable for isokinetic sampling should be available, e.g., 0.32 to 1.27 cm (⅛ to ½ in.)—or larger if higher volume sampling trains are used—inside diameter (ID) nozzles in increments of 0.16 cm (1/16 in.). Each nozzle shall be calibrated according to the procedures outlined in Section 5.

2.1.2 Probe Liner. Borosilicate or quartz glass tubing with a heating system capable of maintaining a gas temperature at the exit end during sampling of 120±14° C (248±25° F), or such other temperature as specified by an applicable subpart of the standards or approved by the Administrator for a particular application. (The tester may opt to operate the equipment at a temperature lower than that specified.) Since the actual temperature at the outlet of the probe is not usually monitored during sampling, probes constructed according to APTD-0581 and utilizing the calibration curves of APTD-0576 (or calibrated according to the procedure outlined in APTD-0576) will be considered acceptable.

Either borosilicate or quartz glass probe liners may be used for stack temperatures up to about 480° C (900° F); quartz liners shall be used for temperatures between 480 and 900° C (900 and 1,650° F). Both types of liners may be used at higher temperatures than specified for short periods of time, subject to the approval of the Administrator. The softening temperature for borosilicate is 820° C (1,508° F), and for quartz it is 1,500° C (2,732° F).

[1] Mention of trade names or specific product does not constitute endorsement by the Environmental Protection Agency.

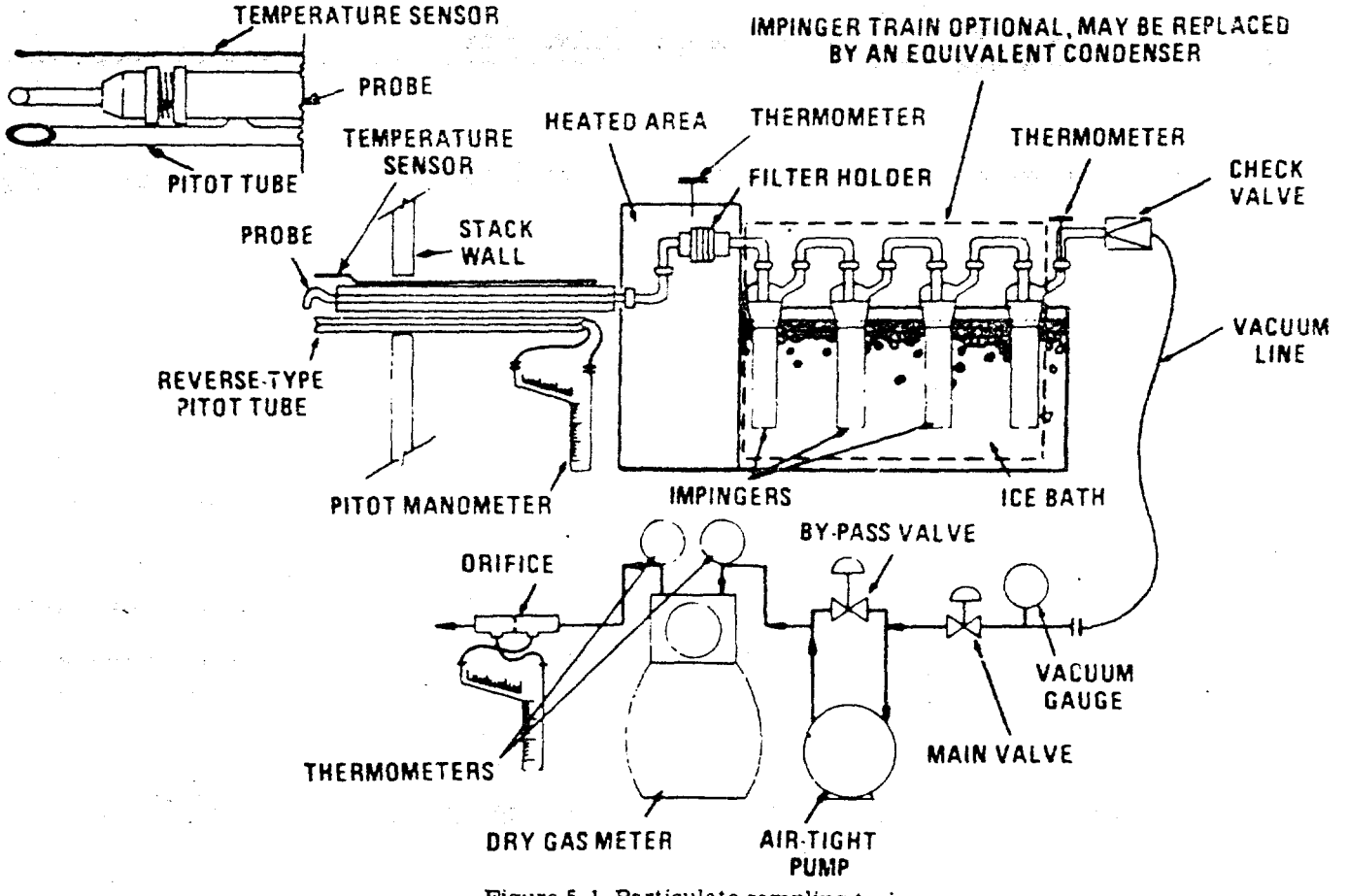

Figure 5-1. Particulate-sampling train

60-113 O—80——22

Reprinted from CFR Title 40 dated July 1980
pages 325-342

Wherever practical, every effort should be made to use borosilicate or quartz glass probe liners. Alternatively, metal liners (e.g., 316 stainless steel, Incoloy 825) or [illegible]

[illegible] shall be attached to the probe [illegible] plane (see Method 2, Figure 2-6b) during [illegible] as outlined in Section [illegible] of Method 2.

[illegible] other temperature as specified by an applicable subpart of the standards or approved by the Administrator for a particular [illegible] within 2° C (4° F) and be installed so that [illegible] shown in ASTM D-3176-74, may be used.

[illegible] Condenser. The first two systems shall be [illegible] in series with leak-free ground glass fittings or [illegible] fittings. The first, third, and fourth impingers shall be of the Greenburg-Smith [illegible] modified by replacing the tip with a [illegible] glass tube extending to about 13 mm (½ in.) from the bottom of the flask. The second impinger shall be of the Greenburg-Smith design with the standard tip. Modifications (e.g., using flexible connections between the impingers, using materials other than glass, or using flexible vacuum lines to connect the filter holder to the condenser) may be used, subject to the approval of the Administrator. The first and second impingers shall contain known quantities of water (Section 4.1.3), the third shall be empty, and the fourth shall contain a known weight of silica gel, or equivalent desiccant. A thermometer, capable of measuring temperature to within 1° C (2° F) shall be placed at the outlet of the fourth impinger for monitoring purposes.

Alternatively, any system that cools the sample gas stream and allows measurement of the water condensed and moisture leaving the condenser, each to within 1 ml or 1 g may be used, subject to the approval of the Administrator. Acceptable means are to measure the condensed water either gravimetrically or volumetrically and to measure [illegible]

[illegible] equivalent form) that will keep the gas stream at 20° C (68° F) or less [illegible]

If moisture content is used to determine sample volume [illegible] gel (or equivalent) still is used between the [illegible] conditions in the stack and [illegible] corrections for moisture in the meter [illegible]

[illegible] approval of the Administrator. When the metering system is used in conjunction with [illegible] of sufficient size [illegible] that allowed in the calibration of the [illegible]

2.1.9 Barometer. [illegible] other barometer capable of measuring atmospheric pressure to within 2.5 mm Hg (0.1 in. Hg). In lieu of a barometer, the local weather station value (adjusted for the elevation difference between the weather station and sampling point) shall be applied at a rate of minus 2.5 mm Hg (0.1 in. Hg) per 30 m (100 ft) elevation increase or vice versa for elevation decrease.

2.1.10 Gas Density Determination Equipment. Temperature sensor and pressure gauge, as described in Sections 2.3 and 2.5 of Method 2, and gas analyzer, if necessary, as described in Method 3. The temperature sensor shall, preferably, be permanently attached to the pitot tube or sampling probe in a fixed configuration, such that the tip of the sensor extends beyond the leading edge of the probe sheath and does not touch any metal. Alternatively, the sensor may be attached just prior to use in the field. Note, however, that if the temperature sensor is attached in the field, the sensor must be placed in an interference-free arrangement with respect to the Type S pitot tube openings (see Method 2, Figure 2-7). As a second alternative, if a difference of not more than 1 percent in the average velocity [illegible] ment is to be introduced, the temperature gauge need not be attached to the probe or pitot tube. (This alternative is [illegible]

[illegible] Glass Wool. This [illegible] fibers free of organics.

[illegible] Stopcock Grease. [illegible] silicone grease, if either gel is [illegible] Alternately, [illegible] equipment is used.

2.3.1 Glass Wool. [illegible]

2.3.2 [illegible]

2.3.3 Volumetric Glassware. To measure volumes within 0.1 ml.

2.3.4 Balance. To measure to within 0.1 g.

2.3.5 Beakers. 250 ml.

2.3.6 Hygrometer. To measure the [illegible] humidity of the laboratory environment.

2.3.7 Temperature Gauge. To measure the temperature of the laboratory environment.

3. Reagents

3.1 Sampling. The reagents used in sampling are as follows:

3.1.1 Filters. Glass fiber filters, without organic binder, exhibiting at least 99.95 percent efficiency (<0.05 percent penetration) on 0.3-micron dioctyl phthalate smoke particles. The filter efficiency test shall be conducted in accordance with ASTM standard method D 2986-71. Test data from the [illegible] quality control program are sufficient for this purpose.

3.1.2 Silica Gel. Indicating type, 6 to 16 mesh. If previously used, dry at 175° C (350° F) for 2 hours. New silica gel may be used as received. Alternatively, other types of adsorbents (equivalent or better) may be used, subject to the approval of the Administrator.

Reprinted from CFR Title 40 dated July 1980

pages 325 - 342

3.1.3 Water. When analysis of the material caught in the impingers is required, distilled water shall be used. Run blanks prior to field use to eliminate a high blank on test samples.

3.1.4 Crushed Ice.

3.1.5 Stopcock Grease. Acetone-insoluble, heat-stable silicone grease. This is not necessary if screw-on connectors with Teflon sleeves, or similar, are used. Alternatively, other types of stopcock grease may be used, subject to the approval of the Administrator.

3.2 Sample Recovery. Acetone-reagent grade, <0.001 percent residue, in glass bottles—is required. Acetone from metal containers generally has a high residue blank and should not be used. Sometimes, suppliers transfer acetone to glass bottles from metal containers; thus, acetone blanks shall be run prior to field use and only acetone with low blank values (<0.001 percent) shall be used. In no case shall a blank value of greater than 0.001 percent of the weight of acetone used be subtracted from the sample weight.

3.3 Analysis. Two reagents are required for the analysis:

3.3.1 Acetone. Same as 3.2.

3.3.2 Desiccant. Anhydrous calcium sulfate, indicating type. Alternatively, other types of desiccants may be used, subject to the approval of the Administrator.

4. *Procedure*

4.1 Sampling. The complexity of this method is such that, in order to obtain reliable results, testers should be trained and experienced with the test procedures.

4.1.1 Pretest Preparation. All the components shall be maintained and calibrated according to the procedure described in APTD-0576, unless otherwise specified herein.

Weigh several 200 to 300 g portions of silica gel in air-tight containers to the nearest 0.5 g. Record the total weight of the silica gel plus container, on each container. As an alternative, the silica gel need not be preweighed, but may be weighed directly in the impinger or sampling holder just prior to train assembly.

Check filters visually against light for irregularities and flaws or pinhole leaks. Label filters of the proper diameter on the back side near the edge using numbering machine ink. As an alternative, label the shipping containers (glass or plastic petri dishes) and keep the filters in these containers at all times except during sampling and weighing.

Desiccate the filters at 20±5.6° C (68±10° F) and ambient pressure for at least 24 hours and weigh at intervals of at least 6 hours to a constant weight, i.e., 0.5 mg change from previous weighing; record results to the nearest 0.1 mg. During each weighing the filter must not be exposed to the laboratory atmosphere for a period greater than 2 minutes and a relative humidity above 50 percent. Alternatively (unless otherwise specified by the Administrator), the filters may be oven dried at 105° C (220° F) for 2 to 3 hours, desiccated for 2 hours, and weighed. Procedures other than those described, which account for relative humidity effects, may be used, subject to the approval of the Administrator.

4.1.2 Preliminary Determinations. Select the sampling site and the minimum number of sampling points according to Method 1 or as specified by the Administrator. Determine the stack pressure, temperature, and the range of velocity heads using Method 2; it is recommended that a leak-check of the pitot lines (see Method 2, Section 3.1) be performed. Determine the moisture content using Approximation Method 4 or its alternatives for the purpose of making isokinetic sampling rate settings. Determine the stack gas dry molecular weight, as described in Method 2, Section 3.6; if integrated Method 3 sampling is used for molecular weight determination, the integrated bag sample shall be taken simultaneously with, and for the same total length of time as, the particulate sample run.

Select a nozzle size based on the range of velocity heads, such that it is not necessary to change the nozzle size in order to maintain isokinetic sampling rates. During the run, do not change the nozzle size. Ensure that the proper differential pressure gauge is chosen for the range of velocity heads encountered (see Section 2.2 of Method 2).

Select a suitable probe liner and probe length such that all traverse points can be sampled. For large stacks, consider sampling from opposite sides of the stack to reduce the length of probes.

Select a total sampling time greater than or equal to the minimum total sampling time specified in the test procedures for the specific industry such that (1) the sampling time per point is not less than 2 min (or some greater time interval as specified by the Administrator), and (2) the sample volume taken (corrected to standard conditions) will exceed the required minimum total gas sample volume. The latter is based on an approximate average sampling rate.

It is recommended that the number of minutes sampled at each point be an integer or an integer plus one-half minute, in order to avoid timekeeping errors. The sampling time at each point shall be the same.

In some cirumstances, e.g., batch cycles, it may be necessary to sample for shorter times at the traverse points and to obtain smaller gas sample volumes. In these cases, the Administrator's approval must first be obtained.

4.1.3 Preparation of Collection Train. During preparation and assembly of the sampling train, keep all openings where contamination can occur covered until just prior to assembly or until sampling is about to begin.

Place 100 ml of water in each of the first two impingers, leave the third impinger empty, and transfer approximately 200 to 300 g of preweighed silica gel from its container to the fourth impinger. More silica gel may be used, but care should be taken to ensure that it is not entrained and carried out from the impinger during sampling. Place the container in a clean place for later use in the sample recovery. Alternatively, the weight of the silica gel plus impinger may be determined to the nearest 0.5 g and recorded.

Using a tweezer or clean disposable surgical gloves, place a labeled (identified) and weighed filter in the filter holder. Be sure that the filter is property centered and the gasket properly placed so as to prevent the sample gas stream from circumventing the filter. Check the filter for tears after assembly is completed.

When glass liners are used, install the selected nozzle using a Viton A O-ring when stack temperatures are less than 260° C (500° F) and an asbestos string gasket when temperatures are higher. See APTD-0576 for details. Other connecting systems using either 316 stainless steel or Teflon ferrules may be used. When metal liners are used, install the nozzle as above or by a leak-free direct mechanical connection. Mark the probe with heat resistant tape or by some other method to denote the proper distance into the stack or duct for each sampling point.

Set up the train as in Figure 5-1, using (if necessary) a very light coat of silicone grease on all ground glass joints, greasing only the outer portion (see APTD-0576) to avoid possibility of contamination by the silicone grease. Subject to the approval of the Administrator, a glass cyclone may be used between the probe and filter holder when the total particulate catch is expected to exceed 100 mg or when water droplets are present in the stack gas.

Place crushed ice around the impingers.

4.1.4 Leak-Check Procedures.

4.1.4.1 Pretest Leak-Check. A pretest leak-check is recommended, but not required. If the tester opts to conduct the pretest leak-check, the following procedure shall be used.

After the sampling train has been assembled, turn on and set the filter and probe heating systems at the desired operating temperatures. Allow time for the temperatures to stabilize. If a Viton A O-ring or other leak-free connection is used in assembling the probe nozzle to the probe liner, leak-check the train at the sampling site by plugging the nozzle and pulling a 380 mm Hg (15 in. Hg) vacuum.

NOTE.—A lower vacuum may be used, provided that it is not exceeded during the test.

If an asbestos string is used, do not connect the probe to the train during the leak-check. Instead, leak-check the train by first plugging the inlet to the filter holder (cycone, if applicable) and pulling a 380 mm Hg (15 in. Hg) vacuum (see Note immediately above). Then connect the probe to the train and leak-check at about 25 mm Hg (1 in. Hg) vacuum; alternatively, the probe may be leak-checked with the rest of the sampling train, in one step, at 380 mm Hg (15 in. Hg) vacuum. Leakage rates in excess of 4 percent of the average sampling rate or 0.00057 m^3/min (0.02 cfm), whichever is less, are unacceptable.

The following leak-check instructions for the sampling train described in APTD-0576 and APTD-0581 may be helpful. Start the pump with bypass valve fully open and coarse adjust valve, completely closed. Partially open the coarse adjust valve and slowly close the bypass valve until the desired vacuum is reached. Do not reverse direction of bypass value; this will cause water to back up into the filter holder. If the desired vacuum is exceeded, either leak-check at this higher vacuum or end the leak-check as shown below and start over.

When the leak-check is completed, first slowly remove the plug from the inlet to the probe, filter holder, or cyclone (if applicable) and immediately turn off the vacuum pump. This prevents the water in the impingers from being forced backward into the filter holder and silica gel from being entrained backward into the third impinger.

4.1.4.2 Leak-Checks During Sample Run. If, during the sampling run, a component (e.g., filter assembly or impinger) change becomes unecessary, a leak-check shall be conducted immediately before the change is made. The leak-check shall be done according to the procedure outlined in Section 4.1.4.1 above, except that it shall be done at a vacuum equal to or greater than the maximum value recorded up to that point in the test. If the leakage rate is found to be no

greater than 0.00057 m³/min (0.02 cfm) or 4 percent of the average sampling rate (whichever is less), the results are accept-

If, however, a higher leakage rate is obtained, the tester shall either record the leakage rate and correct the sample volume as shown in Section 6.3 of this method.

tate additional adjustments in flow rate. Level and zero the manometer. Because the manometer level and zero may drift

leak-checks are optional; if

4.1.4.2 Post-test

shall sampling run. The

lines in Section 4.1.4.1, except

PLANT

LOCATION

OPERATOR

DATE

RUN NO.

SAMPLE BOX NO.

METER ΔH@

C factor

Pitot tube coefficient

Schematic of stack cross section

Probe length, m

Nozzle identification

Average calibrated nozzle diameter

Assumed moisture, %

Leak rate, m³/min (cfm)

Filter number

Remarks

TRAVERSE POINT NUMBER	SAMPLING TIME (θ), min	VACUUM mm Hg (in. Hg)	STACK TEMPERATURE (Ts) °C (°F)	PROBE TEMP. °C (°F)	DIFFERENTIAL METER OR ORIFICE mm H₂O (in. H₂O)	GAS SAMPLE VOLUME m³ (ft³)	FILTER HOLDER TEMPERATURES °C (°F) INLET	OUTLET	IMPINGER TEMP. °C (°F)	DRY GAS METER °C (°F)
TOTAL							Avg.	Avg.		
AVERAGE							Avg.			

Figure 5-2. Particulate field data.

When the stack is under significant negative pressure (height of impinger stem), take care to close the coarse adjust valve before inserting the probe into the stack to prevent water from backing into the filter holder. If necessary, the pump may be turned on with the coarse adjust valve closed.

When the probe is in position, block off the openings around the probe and porthole to prevent unrepresentative dilution of the gas stream.

Traverse the stack cross-section, as required by Method 1 or as specified by the Administrator, being careful not to bump the probe nozzle into the stack walls when sampling near the walls or when removing or inserting the probe through the portholes; this minimizes the chance of extracting deposited material.

During the test run, make periodic adjustments to keep the temperature around the filter holder at the proper level; add more ice and, if necessary, salt to maintain a temperature of less than 20° C (68° F) at the condenser/silica gel outlet. Also, periodically check the level and zero of the manometer.

If the pressure drop across the filter becomes too high, making isokinetic sampling difficult to maintain, the filter may be replaced in the midst of a sample run. It is recommended that another complete filter assembly be used rather than attempting to change the filter itself. Before a new filter assembly is installed, conduct a leak-check (see Section 4.1.4.2). The total particulate weight shall include the summation of all filter assembly catches.

A single train shall be used for the entire sample run, except in cases where simultaneous sampling is required in two or more separate ducts or at two or more different locations within the same duct, or, in cases where equipment failure necessitates a change of trains. In all other situations, the use of two or more trains will be subject to the approval of the Administrator.

Note that when two or more trains are used, separate analyses of the front-half and (if applicable) impinger catches from each train shall be performed, unless identical nozzle sizes were used on all trains, in which case, the front-half catches from the individual trains may be combined (as may the impinger catches) and one analysis of front-half catch and one analysis of impinger catch may be performed. Consult with the Administrator for details concerning the calculation of results when two or more trains are used.

At the end of the sample run, turn off the coarse adjust valve, remove the probe and nozzle from the stack, turn off the pump, record the final dry gas meter reading, and conduct a post-test leak-check, as outlined in Section 4.1.4.3. Also, leak-check the pitot lines as described in Method 2, Section 3.1; the lines must pass this leak-check, in order to validate the velocity head data.

4.1.6 Calculation of Percent Isokinetic. Calculate percent isokinetic (see Calculations, Section 6) to determine whether the run was valid or another test run should be made. If there was difficulty in maintaining isokinetic rates due to source conditions, consult with the Administrator for possible variance on the isokinetic rates.

4.2 Sample Recovery. Proper cleanup procedure begins as soon as the probe is removed from the stack at the end of the sampling period. Allow the probe to cool.

When the probe can be safely handled, wipe off all external particulate matter near the tip of the probe nozzle and place a cap over it to prevent losing or gaining particulate matter. Do not cap off the probe tip tightly while the sampling train is cooling down as this would create a vacuum in the filter holder, thus drawing water from the impingers into the filter holder.

Before moving the sample train to the cleanup site, remove the probe from the sample train, wipe off the silicone grease, and cap the open outlet of the probe. Be careful not to lose any condensate that might be present. Wipe off the silicone grease from the filter inlet where the probe was fastened and cap it. Remove the umbilical cord from the last impinger and cap the impinger. If a flexible line is used between the first impinger or condenser and the filter holder, disconnect the line at the filter holder and let any condensed water or liquid drain into the impingers or condenser. After wiping off the silicone grease, cap off the filter holder outlet and impinger inlet. Either ground-glass stoppers, plastic caps, or serum caps may be used to close these openings.

Transfer the probe and filter-impinger assembly to the cleanup area. This area should be clean and protected from the wind so that the chances of contaminating or losing the sample will be minimized.

Save a portion of the acetone used for cleanup as a blank. Take 200 ml of this acetone directly from the wash bottle being used and place it in a glass sample container labeled "acetone blank."

Inspect the train prior to and during disassembly and note any abnormal conditions. Treat the samples as follows:

Container No. 1. Carefully remove the filter from the filter holder and place it in its identified petri dish container. Use a pair of tweezers and/or clean disposable surgical gloves to handle the filter. If it is necessary to fold the filter, do so such that the particulate cake is inside the fold. Carefully transfer to the petri dish any particulate matter and/or filter fibers which adhere to the filter holder gasket, by using a dry Nylon bristle brush and/or a sharp-edged blade. Seal the container.

Container No. 2. Taking care to see that dust on the outside of the probe or other exterior surfaces does not get into the sample, quantitatively recover particulate matter or any condensate from the probe nozzle, probe fitting, probe liner, and front half of the filter holder by washing these components with acetone and placing the wash in a glass container. Distilled water may be used instead of acetone when approved by the Administrator and shall be used when specified by the Administrator; in these cases, save a water blank and follow the Administrator's directions on analysis. Perform the acetone rinses as follows:

Carefully remove the probe nozzle and clean the inside surface by rinsing with acetone from a wash bottle and brushing with a Nylon bristle brush. Brush until the acetone rinse shows no visible particles, after which make a final rinse of the inside surface with acetone.

Brush and rinse the inside parts of the Swagelok fitting with acetone in a similar way until no visible particles remain.

Rinse the probe liner with acetone by tilting and rotating the probe while squirting acetone into its upper end so that all inside surfaces will be wetted with acetone. Let the acetone drain from the lower end into the sample container. A funnel (glass or polyethylene) may be used to aid on transferring liquid washes to the container. Follow the acetone rinse with a probe brush. Hold the probe in an inclined position, squirt acetone into the upper end as the probe brush is being pushed with a twisting action through the probe; hold a sample container underneath the lower end of the probe, and catch any acetone and particulate matter which is brushed from the probe. Run the brush through the probe three times or more until no visible particulate matter is carried out with the acetone or until none remains in the probe liner on visual inspection. With stainless steel or other metal probes, run the brush through in the above prescribed manner at least six times since metal probes have small crevices in which particulate matter can be entrapped. Rinse the brush with acetone, and quantitatively collect these washings in the sample container. After the brushing, make a final acetone rinse of the probe as described above.

It is recommended that two people be used to clean the probe to minimize sample losses. Between sampling runs, keep brushes clean and protected from contaminations.

After ensuring that all joints have been wiped clean of silicone grease, clean the inside of the front half of the filter holder by rubbing the surfaces with a Nylon bristle brush and rinsing with acetone. Rinse each surface three times or more if needed to remove visible particulate. Make a final rinse of the brush and filter holder. Carefully rinse out the glass cyclone, also (if applicable). After all acetone washings and particulate matter have been collected in the sample container, tighten the lid on the sample container so that acetone will not leak out when it is shipped to the laboratory. Mark the height of the fluid level to determine whether or not leakage occured during transport. Label the container to clearly identify its contents.

Container No. 3. Note the color of the indicating silica gel to determine if it has been completely spent and make a notation of its condition. Transfer the silica gel from the fourth impinger to its original container and seal. A funnel may make it easier to pour the silica gel without spilling. A rubber policeman may be used as an aid in removing the silica gel from the impinger. It is not necessary to remove the small amount of dust particles that may adhere to the impinger wall and are difficult to remove. Since the gain in weight is to be used for moisture calculations, do not use any water or other liquids to transfer the silica gel. If a balance is available in the field, follow the procedure for container No. 3 in Section 4.3.

Impinger Water. Treat the impingers as follows: Make a notation of any color or film in the liquid catch. Measure the liquid which is in the first three impingers to within ±1 ml by using a graduated cylinder or by weighing it to within ±0.5 g by using a balance (if one is available). Record the

5. *Calibration*

Maintain a laboratory log of all calibrations.

5.1 Probe Nozzle. Probe nozzles shall be calibrated before their initial use in the field. Using a micrometer, measure the inside diameter of the nozzle to the nearest 01.025 mm (0.001 in.). Make three separate measurements using different diameters each time, and obtain the average of the measurements. The difference between the high and low numbers shall not exceed 0.1 mm (0.004 in.). When nozzles become nicked, dented, or corroded, they shall be reshaped, sharpened, and recalibrated before use. Each nozzle shall be permanently and uniquely identified.

5.2 Pitot Tube. The Type S pitot tube assembly shall be calibrated according to the procedure outlined in Section 4 of Method 2.

5.3 Metering System. Before its initial use in the field, the metering system shall be calibrated according to the procedure outlined in APTD-0576. Instead of physically adjusting the dry gas meter dial readings to correspond to the wet test meter readings, calibration factors may be used to mathematically correct the gas meter dial readings to the proper values. Before calibrating the metering system, it is suggested that a leak-check be conducted. For metering systems having diaphragm pumps, the normal leak-check procedure will not detect leakages within the pump. for these cases the following leak-check procedure is suggested: make a 10-minute calibration run at 0.0057 m³/min (0.02 cfm); at the end of the run, take the difference of the measured wet test meter and dry gas meter volumes; divide the difference by 10, to get the leak rate. The leak rate should not exceed 0.00057 m³/min (0.02 cfm).

After each field use, the calibration of the metering system shall be checked by performing three calibration runs at a single, intermediate orifice setting (based on the previous field test). With the vacuum set at the maximum value reached during the test series. To adjust the vacuum, insert a valve between the wet test meter and the inlet of the metering system. Calculate the average value of the calibration factor. If the calibration has changed by more than 5 percent, recalibrate the meter over the full range of orifice settings, as outlined in APTD-0576.

Alternative procedures, e.g., using the orifice meter coefficients, maybe used, subject to the approval of the Administrator.

NOTE.—If the dry gas meter coefficient values obtained before and after a test series differ by more than 5 percent, the test series shall either be voided, or calculations for test series shall be performed using whichever meter coefficient value (i.e., before or after) gives the lower value of total sample volume.

5.4 Probe Heater Calibration. The probe heating system shall be calibrated before its initial use in the field according to the procedure outlined in APTD-0576. Probes constructed according to APTD-0581 need not be calibrated if the calibration curves in APTD-0576 are used.

5.5 Temperature Gauges. Use the procedure in Section 4.3 of Method 2 to calibrate in-stack temperature gauges. Dial thermometers, such as are used for the dry gas meter and condenser outlet, shall be calibrated against mercury-in-glass thermometers.

5.6 Leak Check of Metering System Shown in Figure 5-1. That portion of the sampling train from the pump to the orifice meter should be leak checked prior to initial use and after each shipment. Leakage after the pump will result in less volume being recorded than is actually sampled. The following procedure is suggested (see Figure 5-4): Close the main valve on the meter box. Insert a one-hole rubber stopper with rubber tubing attached into the orifice exhaust pipe. Disconnect and vent the low side of the orifice manometer. Close off the low side orifice tap. Pressurize the system to 13 to 18 cm (5 to 7 in.) water column by blowing into the rubber tubing. Pinch off the tubing and observe the manometer for one minute. A loss of pressure on the manometer indicates a leak in the meter box; leaks, if present, must be corrected.

5.7 Barometer. Calibrate against a mercury barometer.

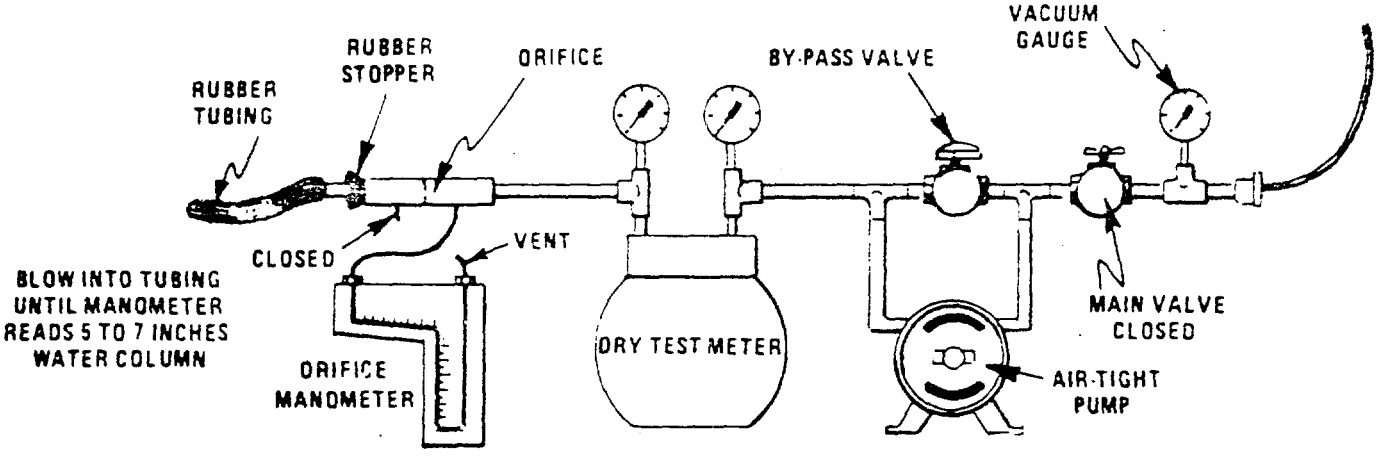

Figure 5-4. Leak check of meter box.

volume or weight of liquid present. This information is required to calculate the moisture content of the effluent gas.

LIQUID COLLECTED		
TOTAL VOLUME COLLECTED		ml

INCREASE BY DENSITY OF WATER (g/ml)

INCREASE, g / (g/ml)

Figure 5-2. Analytical data.

Reprinted from CFR Title 40 dated July 1980

pages 325 - 342

6. *Calculations*

Carry out calculations, retaining at least one extra decimal figure beyond that of the acquired data. Round off figures after the final calculation. Other formulas may be used in place of those in this section if they can be shown to give equivalent results.

6.1 Nomenclature

A_n = Cross-sectional area of nozzle, m² (ft²).
B_{ws} = Water vapor in the gas stream, proportion by volume.
C_a = Acetone blank residue concentration, mg/g.
c_s = Concentration of particulate matter in stack gas, dry basis, corrected to standard conditions, g/dscm (g/dscf).
I = Percent of isokinetic sampling.
L_a = Maximum acceptable leakage rate for either a pretest leak check or for a leak check following a component change; 4% of the sampling rate, or 0.00057 m³/min (0.020 cfm).
L_i = Individual leakage rate observed during the leak check conducted prior to the "i"th component change (i = 1, 2, ... n), m³/min (cfm).
L_p = Leakage rate observed during the post-test leak check, m³/min (cfm).
m_a = Total amount of particulate matter collected, mg.
M_w = Molecular weight of water, 18.0 g/g-mole (18.0 lb/lb-mole).
m_n = Mass of residue of acetone after evaporation, mg.
P_{bar} = Barometric pressure at the sampling site, mm Hg (in. Hg).
P_s = Absolute stack gas pressure, mm Hg (in. Hg).
P_{std} = Standard absolute pressure, 760 mm Hg (29.92 in. Hg).
R = Ideal gas constant, 0.06236 mm Hg-m³/°K-g-mole (21.85 in. Hg-ft³/°R-lb-mole).
T_m = Absolute average dry gas meter temperature (see Figure 5-2), °K (°R).
T_s = Absolute average stack gas temperature (see Figure 5-2), °K (°R).
T_{std} = Standard absolute temperature, 293° K (528° R).
V_a = Volume of acetone blank, ml.
V_{aw} = Volume of acetone used in wash, ml.
V_{lc} = Total volume of liquid collected in impingers and silica gel (see Figure 5-3), ml.
V_m = Volume of gas sample as measured by dry gas meter, dcm (dscf).
$V_{m(std)}$ = Volume of gas sample measured by the dry gas meter, corrected to standard conditions, dscm (dscf).
$V_{w(std)}$ = Volume of water vapor in the gas sample, corrected to standard conditions, scm (scf).
v_s = Stack gas velocity, calculated by Method 2, Equation 2-9, using data obtained from Method 5, m/sec (ft/sec).
W_a = Weight of residue in acetone wash, mg.
Y = Dry gas meter calibration factor.
ΔH = Average pressure differential across the orifice meter (see Figure 5-2), mm H_2O (in. H_2O).
ρ_a = Density of acetone, mg/ml (see label on bottle).
ρ_w = Density of water, 0.9982 g/ml (0.00220 lb/ml).
θ = Total sampling time, min.
θ_i = Sampling time interval, between two successive component changes, beginning with the interval between the first and second changes, min.
θ_n = Sampling time interval, from the "n"th component change until the end of the sampling run, min.
13.6 = Specific gravity of mercury.
60 = Sec/min.
100 = Conversion to percent.

6.2 Average dry gas meter temperature and average orifice pressure drop. See data sheet (Figure 5-2).

6.3 Dry Gas Volume. Correct the sample volume measured by the dry gas meter to standard conditions (20° C, 760 mm Hg or 68° F, 29.92 in. Hg) by using Equation 5-1.

$$V_{m(std)} = V_m Y \left(\frac{T_{std}}{T_m}\right)\left[\frac{P_{bar} + \frac{\Delta H}{13.6}}{P_{std}}\right] = K_1 V_m \frac{P_{bar} + (\Delta H/13.6)}{T_m}$$

Equation 5-1

where:
K_1 = 0.3858 °K/mm Hg for metric units
= 17.64 °R/in. Hg for English units

NOTE—Equation 5-1 can be used as written unless the leakage rate observed during any of the mandatory leak checks (i.e., the pretest leak check or any subsequent leak check conducted prior to component changes) exceeds L_a. If L_p or L_i exceeds L_a, Equation 5-1 must be modified as follows:

(a) Case I. No component changes made during sampling run. In this case, replace V_m in Equation 5-1 with the expression:

$$V_m - (L_p - L_a)\theta]$$

(b) Case II. One or more component changes made during the sampling run. In this case, replace V_m in Equation 5-1 by the expression:

$$\left[V_m - (L_1 - L_a)\theta_1 - \sum_{i=2}^{n} (L_i - L_a)\theta_i - (L_p - L_a)\theta_n\right]$$

and substitute only for those leakage rates (L_i or L_p) which exceed L_a.

6.4 Volume of water vapor.

$$V_{w(std)} = V_{lc}\left(\frac{\rho_w}{M_w}\right)\left(\frac{RT_{std}}{P_{std}}\right) = K_2 V_{lc}$$

Equation 5-2

where:
K_2 = 0.0447 m³/ml (0.00132 ft³/ml) for metric or English units.

For saturated, or water droplet-laden gas streams, two calculations of the moisture content of the stack gas shall be made, one from the impinger analysis (Equation 5-3), and a second from the assumption of saturated conditions. The lower of the two values of B_{ws} shall be used for the calculation of P_s (Equation 5-5) and for the calculation of V_s (Equation 5-9) and C_s (Equation 5-11) if the moisture content from the impinger analysis is less than that from saturated conditions.

6.5 Stack Gas Velocity. [illegible]

$$C_a = \frac{m_a}{V_{m(std)}}$$

Equation 5-11

6.7 Acetone Wash Blank.

$$W_a = C_a V_{aw} \rho_a$$

Equation 5-6

6.8 Total Particulate Weight. Determine the total particulate catch from the sum of the weights obtained from containers 1 and 2 less the acetone blank (see Figure 5-6).

NOTE—Prior to Section 1.5 is made for calculation of results involving two or more filter assemblies or two or more sampling trains.

6.9 Particulate Concentration.

$$c_s = (0.001\ g/mg)(m_n/V_{m(std)})$$

Equation 5-7

6.10 Conversion Factors:

From	To	Multiply by
scf	m³	0.02832
g/ft³	g/m³	35.43
g/ft³	lb/ft³	2.205×10^{-3}
g/ft³	g/m³	35.31

6.11 Isokinetic Variation.

6.11.1 Calculation From Raw Data.

$$I = \frac{100\, T_s [K_3 V_{lc} + (V_m/T_m)(P_{bar} + \Delta H/13.6)]}{60\, \theta v_s P_s A_n}$$

Equation 5-8

Reprinted from CFR Title 40 dated July 1980
pages 325 - 342

where:

K_3 = 0.003454 mm Hg – m³/ml – °K for metric units.

= 0.002669-in. Hg – ft³/ml – °R for English units.

6.11.2 Calculation From Intermediate Values.

$$I = \frac{T_s V_{m(std)} P_{std} 100}{T_{std} v_s \theta A_n P_s 60(1 - B_{ws})}$$

$$= K_4 \frac{T_s V_{m(std)}}{P_s v_s A_n \theta (1 - B_{ws})}$$

Equation 5-8

where:

K_4 = 4.320 for metric units

= 0.09450 for English units.

6.12 Acceptable Results. If 90 percent I < 110 < percent, the results are acceptable.

If the results are low in comparison to the standard and I is beyond the acceptable range, or, if I is less than 90 percent, the Administrator may opt to accept the results. Use Citation 4 to make judgments. Otherwise, reject the results and repeat the test.

7. *Bibliography*

1. Addendum to Specifications for Incinerator Testing at Federal Facilities. PHS, NCAPC. Dec. 6 1967.

2. Martin, Robert M. Construction Details of Isokinetic Source-Sampling Equipment. Environmental Protection Agency. Research Triangle Park, N.C. APTD-0581. April 1971.

3. Rom, Jerome J. Maintenance, Calibration, and Operation of Isokinetic Source Sampling Equipment. Environmental Protection Agency. Research Triangle Park, N.C. APTD-0576. March, 1972.

4. Smith, W. S., R. T. Shigehara, and W. F. Todd. A method of Interpreting Stack Sampling Data. Paper Presented at the 63d Annual Meeting of the Air Pollution Control Association, St. Louis, Mo. June 14-19, 1970.

5. Smith, W. S., et al. Stack Gas Sampling Improved and Simplified With New Equipment. APCA Paper No. 67-119. 1967.

6. Specifications for Incinerator Testing at Federal Facilities. PHS, NCAPC. 1967.

7. Shigehara, R. T. Adjustments in the EPA Nomograph for Different Pitot Tube Coefficients and Dry Molecular Weights. Stack Sampling News 2:4-11, October, 1974.

8. Vollaro, R. F. A Survey of Commercially Available Instrumentation For the Measurement of Low-Range Gas Velocities. U.S. Environmental Protection Agency. Emission Measurement Branch. Research Triangle Park, N.C. November, 1976 (unpublished paper).

9. Annual Book of ASTM Standards. Part 26. Gaseous Fuels; Coal and Coke; Atmospheric Analysis. American Society for Testing and Materials. Philadelphia, Pa. 1974. pp. 617-622.