Note: This is a reference cited in *AP 42, Compilation of Air Pollutant Emission Factors, Volume I Stationary Point and Area Sources.* AP42 is located on the EPA web site at www.epa.gov/ttn/chief/ap42/

The file name refers to the reference number, the AP42 chapter and section. The file name "ref02_c01s02.pdf" would mean the reference is from AP42 chapter 1 section 2. The reference may be from a previous version of the section and no longer cited. The primary source should always be checked.

AP42 Section: 11.1

Reference Number: 140

Title: Source Sampling For Particulate Emissions, American Asphalt Of Wisconsin, Plant #2, Arnott, Wisconsin,

Mathy Construction Company, Onalaska, WI,

May 21, 1991.

AP-42 Section	11.1
Reference	
Report Sect.	4
Reference	140

American Asphalt of Wisconsin #2
Arnott, WI

SOURCE SAMPLING
for
PARTICULATE EMISSIONS

AMERICAN ASPHALT of WISCONSIN
PLANT #2
Arnott, Wisconsin
May 21, 1991

May 21, 1991

Received: 7/18/91

CORRESPONDENCE/MEMORANDUM

State of Wisconsin

DATE: 7-24-91

File Code: 4530

PRELIMINARY STACK TEST REVIEW Received: 7/18/91

By: A Seeber Test Date: 5-21-91

Name of Source: American Asphalt #2 FID #: 999013180

Address:

City: Arnott, WI Permit #: 999013180-001

Description of Source Tested: American Asphalt #2 employs a portable batch mix asphalt plant.

Description of Control Equipment: Baghouse

Test Firm: Mathy Construction Co.
Crew Chief & Phone#: Jim Tryba ( ) 783-6411

Pollutant Tested: Part Test Method: 5
Pollutant Tested: VE Test Method: 9
Pollutant Tested: Test Method:

Test Production Level: 250 TPH
Rated Production Level: 340 TPH

Discussion of Results:

____ The stack test is invalid and will have to be redone because
* front half only in gr/dscf = for soil remed.

The test average result of 0.068 | .02 is X is not ___

in compliance with the emission limit of 0.30 #/10⁶ #gas | .04 gr/dscf.

CC Joe Perez-AM/3
US EPA Region V
Neil Bauthuin - NCD

PARTICULATE CHECKLIST

Name of Source: American Asphalt #2 Test Date: 5-31-91

1. Are the isokinetics per run between 90 and 110%? YES X NO__
   If the %I for a run is outside the range, void the run. See 5.

2. Is the sample volume per run ≥ 30 DSCF? YES X NO__
   If the sample volume for a run is < 30 DSCF, void the run. See 5.

3. Is the sample time per run ≥ 60 min.? YES X NO__
   If the sample time for a run is < 60 min., void the run. See 5.

4. Is the sample time per sample point ≥ two min.? YES X NO__
   If the sample time per point for a run is < two min., void the run. See 5.

5. A stack test shall consist of three valid runs or, at a minimum, two valid runs if one run is voided. Is this a valid test? YES X NO__
   If no, inform the District or the source that the test is unacceptable and should be redone. Your review is over.

6. Is the total particulate per run added correctly? YES X NO__
   If an incorrect total is found, call the consultant and ask for a correction.

7. Was the backhalf included in the total particulate? YES X NO X
   NSPS sources are exempt from including the backhalf. All other sources must include the backhalf. If they don't, the test is invalid. See 5. No, b/c proving they can meet .04gr/dscf for soil remed.

Eq. 1 Gr/DSCF = 15.43* g of part./sample volume of run in DSCF

Eq. 2 Lb/DSCF = (Gr/DSCF)/7000

Eq. 3 Lb/Hr = 60*DSCFM*(Lb/DSCF)

Eq. 4 Lb/10^6 BTU = (Lb/DSCF)*F Factor*20.9/(20.9-Stack O_2)

---

8. If the emission limit is in Gr/DSCF, Lb/DSCF, Lb/Hr, or Lb/10^6 BTU, solve Eq. 1-4. Do your results match the consultant's? YES X NO__
   If no, fix the problem or call the consultant for a correction.

9. Is the three run(or two run) average correct? YES X NO__
   If no, write in the correct average.

10. Is the average result in compliance? YES X NO__
    If no, the District should issue an NOV.

11. Was the source operating at a level representative of full capacity? YES__ NO X
    If no, the permit release may need to provide conditions to cap the source at the test level until a stack test at a higher production level(showing compliance) is performed. If the test was not for permit release, other actions may be warranted.

I. INTRODUCTION

On May 21, 1991, personnel from Mathy Environmental conducted a source emissions test for emissions compliance at American Asphalt Plant #2 located at Arnott, Wisconsin.

The purpose of the test was to determine if the rate of particulate emissions from the plant's baghouse and the total contaminants by weight are below the allowable limits as set forth by the State of Wisconsin.

II. TEST RESULTS

Table I summarizes the test results. The allowable emissions limitation for the State of Wisconsin is found in the Wisconsin Administrative Code, Chapter NR415, Control of Particulate Emissions, where the limit of 0.3 pounds per 1,000 pounds of exhaust gas is specified.

TABLE I

SUMMARY OF TEST RESULTS

Test Run	Time	Grains/ DSCF	Lbs. 1000/Lbs.	Isokinetic Variation
2-1	60 min.	0.0191*	0.0622	98.9 %
2-2	60 min.	0.0220*	0.0708	98.2 %
2-3	60 min.	0.0179*	0.0719	98.7 %

Average = 0.0683 Lbs./1000 Lbs.

* Front Half Analysis

Average = 0.0197 Grains/DSCF

SUMMARY OF TEST DATA
for AMERICAN ASPHALT PLANT #2

SAMPLING TRAIN DATA		Run #1	Run #2	Run #3
1. Sampling time, minutes		60	60	60
2. Sampling nozzle diameter, inches	Dn	0.180	0.180	0.180
3. Sampling nozzle area, sq.ft.	An	0.000177	0.000177	0.000177
4. Isokinetic variation, %	I	98.9	98.2	98.7
5. Sample gas volume, cubic feet	Vm	37.848	38.160	38.570
6. Avg.meter temperature, deg R	Tm	545.3	552.7	547.4
7. Avg.oriface pressure drop, in.H2O	dH	1.43	1.43	1.48
8. Total particulate collected, mg	Mn	88.80	100.20	103.60
VELOCITY TRAVERSE DATA				
9. Stack Area, sq.ft.	A	11.479	11.479	11.479
10. Abs.stack gas pressure, in.Hg.	Ps	30.19	30.14	30.13
11. Barometric pressure, in.Hg.	Pbar	30.25	30.20	30.19
12. Avg.stack temperature, deg R	Ts	690.67	691.83	689.79
13. Avg. sq.rt. velocity head (Cp=.84)		1.3828	1.3849	1.4007
14. Avg.stack gas velocity, ft./sec.	Vs	90.520	90.780	91.643
STACK MOISTURE CONTENT				
15. Total water collected, ml	Vic	143	142	142
16. Moisture in stack gas, %	Bws	15.47	15.36	15.10
EMISSIONS DATA				
17. Stack gas flow rate, dscf/hr.	Qsd	2439139	2441148	2478418
18. Particulate concentration, lb./hr.	E	12.82	14.58	15.01
19. Particulate concentration, lb./Mlb.		0.0622	0.0708	0.0719

Avg. 14.14 lb (Total PM)/hr

FYRITE DATA				
20. Percent CO2 by volume	CO2	4.0	3.0	3.0
21. Percent O2 by volume	O2	17.0	17.0	16.0
22. Percent CO by volume	CO	0.0	0.0	0.0
23. Percent N2 by volume	N2	79.0	80.0	81.0

MATHY CONSTRUCTION COMPANY - ENVIRONMENTAL
PLANT DATA

Date - 5-21-91 Aggregate Moisture - 2.5 %

ant Number - 2 Operator - John adams

Plant Location - Arnott

Plant Manufacturer - Barber Greene

Plant Model / Type - Batch

Burner Fuel Type - R-5 fuel

Mix Type - Hot Oil Type - 120/150 - 85/100

Time	Burner Setting	Total Tonnage TPH	Aggregate TPH	Recycle TPH	Liquid Asphalt TPH	Mix Temp. F	Pressure Drop In./H2O
7:30	6 %	250		—		305	10
8:00	5 %	"		—		300	9
8:30	7 %	260		—		310	10
9:00	6 1/2 %	~~260~~		—		300	9
30	6 %	240		—		305	10
10:00	7 %	~~275~~		—		360	11
10:30	6 1/2	250		—		300	10
11:00	6 %	—				300	11
11:30	—						
12:00	—	—					
12:30	—						
1:00	7 %	—					11
1:30	7 %	—					11
2:00	6 1/2 %	220				305	11
		1220/5 = 250					

MATHY CONSTRUCTION CO.
(A CORPORATION)
GENERAL CONTRACTORS
915 COMMERCIAL COURT
ONALASKA, WISCONSIN 54650
PHONE 783-6411 :: POST OFFICE BOX 189

SOURCE SAMPLING for PARTICULATE EMISSIONS

AMERICAN ASPHALT of WISCONSIN
PLANT #2
Arnott, Wisconsin
May 21, 1991

Gail Jensen, P.E.
Mathy Construction Company

James Tryba, Senior Field Engineer
American Asphalt of Wisconsin,
Division of Mathy Construction Co.

AN EQUAL OPPORTUNITY EMPLOYER

I. INTRODUCTION

On May 21, 1991, personnel from Mathy Environmental conducted a source emissions test for emissions compliance at American Asphalt Plant #2 located at Arnott, Wisconsin.

The purpose of the test was to determine if the rate of particulate emissions from the plant's baghouse and the total contaminants by weight are below the allowable limits as set forth by the State of Wisconsin.

II. TEST RESULTS

Table I summarizes the test results. The allowable emissions limitation for the State of Wisconsin is found in the Wisconsin Administrative Code, Chapter NR415, Control of Particulate Emissions, where the limit of 0.3 pounds per 1,000 pounds of exhaust gas is specified.

TABLE I

SUMMARY OF TEST RESULTS

Test Run	Time	Grains/ DSCF	Lbs. 1000/Lbs.	Isokinetic Variation
2-1	60 min.	0.0191*	0.0622	98.9 %
2-2	60 min.	0.0220*	0.0708	98.2 %
2-3	60 min.	0.0179*	0.0719	98.7 %

Average = 0.0683 Lbs./1000 Lbs.

* Front Half Analysis

Average = 0.0197 Grains/DSCF

III. TEST PROCEDURES

A. Method Used: The source sampling was conducted in accordance with requirements as set forth by the U.S. Environmental Agency.

B. Sampling Site: The emissions test was conducted on a baghouse with a rectangular stack measuring 38" x 43.5" having an equivalent diameter of 40.6". Four sampling ports were placed 36" down from the top of the stack and 96" up from the last flow disturbance. Twenty four points were sampled, six points through each port.

C. No problems were encountered during the test.

IV. THE SOURCE

American Asphalt employs a batch mix asphalt plant which is used to manufacture hot mix asphalt for pavements. The process consists of blending prescribed portions of cold feed materials (sand, gravel, and stone) uniformly and adding sufficient hot liquid asphalt to bind the mixture together. After the hot mix asphalt is manufactured at the plant, it is transported to the location where it is to be applied. The hot mix asphalt is spread evenly over the surface with a paver and then compacted with a heavy roller to produce the final product.

The following is a general description of the plant's manufacturing process. The cold feed materials (aggregate) are placed into separate bins which in turn feed a common conveyor. The aggregate is dispensed from the bins in accordance with the desired job mix formula onto the cold feed system conveyor to a rotating drum for continuous mixing and drying at approximately 300 degrees Fahrenheit. The dried aggregate is lifted by an elevator to the top of the gradation control unit which separates and stores the aggregate by size. The required amount of each aggregate is dispensed into a weigh hopper and from there, into a pugmill where the hot liquid asphalt is mixed thoroughly with the aggregate. This material is transferred to a storage silo. The hot mix asphalt is then discharged from the storage silo through a slide gate into waiting trucks, which then transport the material to the final destination. The rated capacity of the plant will vary with each aggregate mix and moisture content.

The drum dryer uses a burner fired with reprocessed drain oil and air to dry the aggregate. The air is drawn into the system via an exhaust fan located on the baghouse. After passing through the burner and mixing drum, the air passes through the baghouse, and is then discharged to the atmosphere through the stack.

LABORATORY PROCEDURES FOR PARTICULATE SAMPLING

I. FIELD PREPARATION

Filters: 4" fiberglass sampling filters are prepared before each test. The filters are placed in a dessicator to dry for a minimum of 24 hours. After the filters are dried, they are individually placed on a Satorious analytical balance and weighed. After being weighed to a constant weight, they are placed back into the dessicator until they are to be used for the test.

Silica Gel: The silica gel used for the test is indicating type, 6-16 mesh. The silica gel is dried prior to the test and stored in sealed containers. Approximately 200 grams are used for each test.

II. POST-TESTING LAB ANALYSIS

Filters: The filters are returned to the lab in the dessicator. In the lab, the filters are dessicated for at least 24 hours. Then, the filters are weighed until a constant weight is achieved. All data is recorded on the laboratory forms that will be found in the test report.

Alternately, the test team may opt to oven dry the filters at 220 degrees Fahrenheit for two to three hours, weigh the sample, and use this weight as a final weight.

Silica Gel: The silica gel used in the stack test is weighed to a constant weight.

Probe Rinsings: In all tests where a probe washout analysis in necessary, this is a accomplished in accordance with procedures as specified in "EPA Reference Method 5". These samples are returned in sealed containers to the laboratory for analysis. The reagents used for the rinsings are as outlined in the appropriate "EPA Method" used. Backhalf rinsings are also performed when required.

Reagents: The reagents used in the rinsings conform with the ACS grades of standards. Blanks of the reagents used in the field are taken and analyzed so as to insure their purity standards.

SPECIAL NOTE

When sampling sources high in moisture content, such as asphalt plants, the filter paper may adhere to the filter holder or gasket. When removing the filter from the holder, it may tear. In order to maintain control of any small pieces of filter paper, they are washed with the appropriate reagent into the probe wash container. This makes the filter weight light (sometimes negative) and the probe wash correspondingly heavier. The net weight is the same and no particulate is lost. This laboratory procedure is taught by EPA in the Quality Assurance for Source Emissions Workshop and is approved by the EPA.

TABLE OF CONTENTS

Section 1 - Test Plan, Equipment & Permit Requirements

Section 2 - Test Results & Calculations

Section 3 - Field Data

Section 4 - Lab Analysis

Section 5 - Calibrations

AMERICAN ASPHALT OF WISCONSIN
DIVISION OF MATHY CONSTRUCTION CO.
P.O. Box 1726 Wausau, Wisconsin 54402-1726 Phone: 715-693-5200
FAX: 715-693-5220

April 24, 1991

Mr. Neal Baudhuin
Environmental Engineer
Department of Natural Resources
Box 818
Rhinelander, WI 54501

RE: Source Emissions Test for Plant #2

Dear Mr. Baudhuin:

We are preparing to test Plant #2 for an emission test conducted for the purpose of determining compliance with the emission limitations as per the air pollution permit issued on April 24, 1987. The test plan is as follows:

Test Date - May 23, 1991

Time of Test - Approximately 7:00 A.M.

Source Location - American Asphalt Plant #2
Facility ID No. 999013180
4807 Custer Road East
Stevens Point, WI 54481

Process To Be Tested - The exhaust stack of the asphalt plant's baghouse.

Test Method - Methods 1-5 and Method 9 source sampling procedures in accordance with requirements of the U.S. Environmental Protection Agency.

Sampling Equipment:

A. Napp model 31 manual stack sampling system.
B. Airguide instruments model 211-B aneroid barometer.
C. Bacharach instrument company fyrite.

Sampling ports and points - (see attached drawing).

Production Rate - Approximately 280 to 320 ton per hour. Test will be conducted at greater than 80% of plant capacity.

(continued)

AMERICAN ASPHALT OF WISCONSIN
DIVISION OF MATHY CONSTRUCTION CO.
P.O. Box 1726 Wausau, Wisconsin 54402-1726 Phone: 715-693-5200
FAX: 715-693-5220

Type of Aggregate - All virgin material, no recycle. Recycle to be tested at later date.

Burner Fuel - Reprocessed waste oil.

Note: Please see the attached flow chart for step-by-step procedures.

If any additional information is needed, please feel free to call me at (715) 693-5200.

Thank you.

Sincerely,

AMERICAN ASPHALT OF WISCONSIN

James Tryba

James Tryba

JT/ps

Enclosure

MATHY CONSTRUCTION COMPANY - ENVIRONMENTAL
SAMPLING SITE DETAIL
AMERICAN ASPHALT PLANT #2

ack Dimensions :

Width = 38 inches

Length = 43.5 inches

Equiv.Diameter = $\frac{2\ L\ W}{(L + W)}$ = 40.6 inches

No. of Ports = 4 No. of Traverse Points = 24

Outside Port Spacing = 4.8 inches

Inside Port Spacing = 9.5 inches

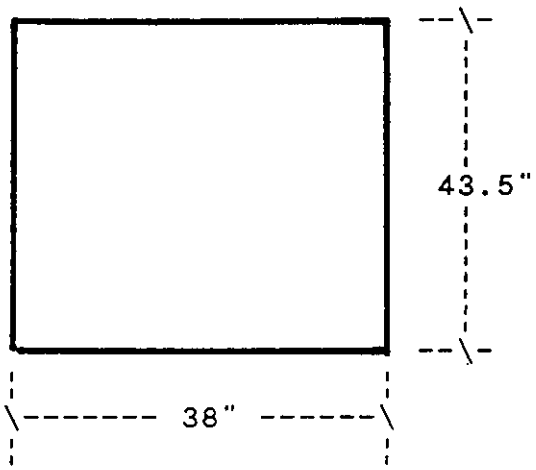

Point	Probe Mark
1	6.6 " **
2	13.9 "
3	21.1 "
4	28.4 "
5	32.6 "
6	39.9 "

** includes 3" nipple

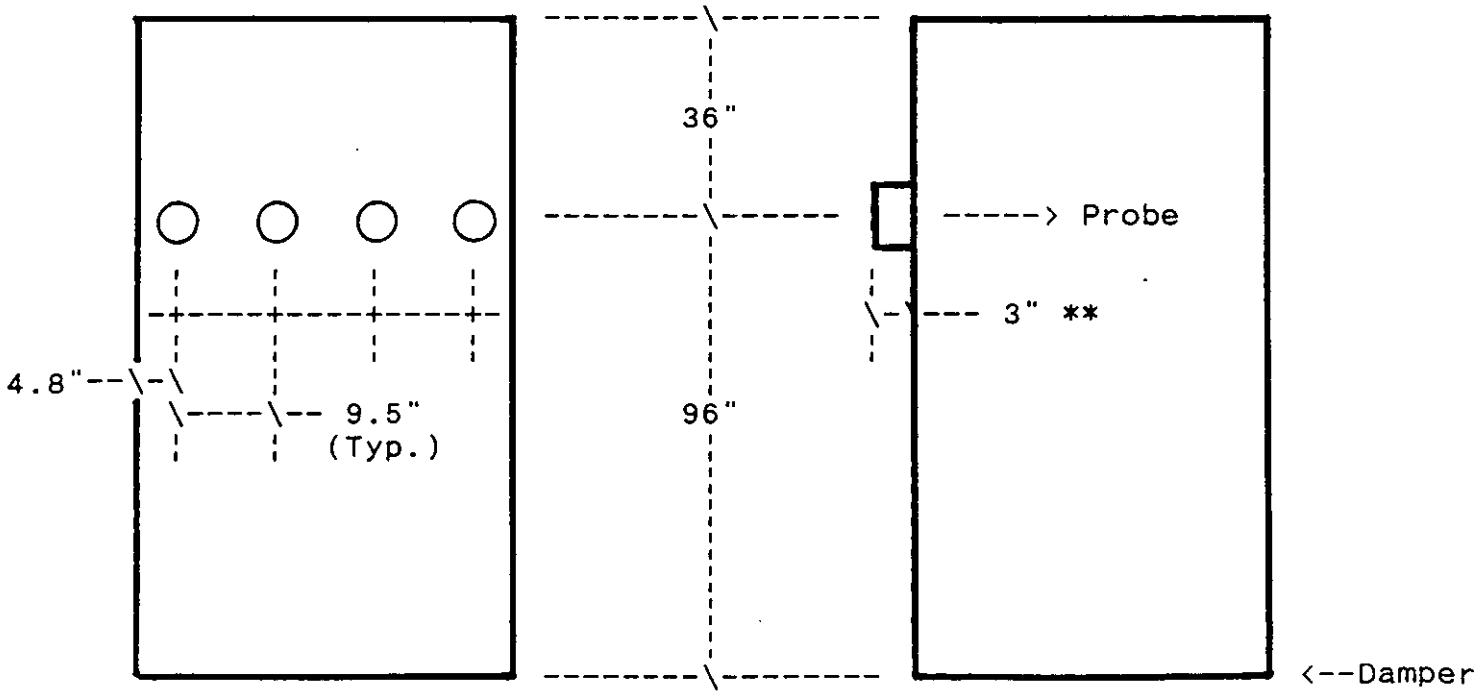

PRE-SURVEY SAMPLING SITE

- Locate hotels and restaurants in area
- Contact plant personnel
- Inform plant personnel of testing objectives and requirements for completion
- Note shift changes
- Determine accessibility of sampling site
- Evaluate safety
- Determine port locations and application to Methods 1 and 2 (12/23/71 Federal Register)
- Locate electrical power supply to site
- Locate restrooms and food at plant
- Drawings, photographs, or blueprints of sampling site
- Evaluate applicability of sampling approach from experiment design
- Note any special equipment needed

FINALIZE TEST PLANS

- Incorporate preliminary into experiment design
- Submit experiment design for approval by Industry and Regulatory Agency
- Set test dates and duration

PREPARE FILTERS AND REAGENTS

- Mark filters with insoluble ink
- Desiccate to constant weight
- Record weights in permanent laboratory file
- Cope file for on site record
- Measure deionized distilled H_2O for impingers
- Weigh silica gel
- Clean sample storage containers

CALIBRATE EQUIPMENT

- DGM
- Determine console $\Delta H@$
- Nozzles
- Thermometers and thermocouples
- Pressure gages
- Orsat
- Pitot tube and probe
- Nomographs

PREPARE EQUIPMENT FOR TEST

- Assemble and confirm operation
- Prepare for shipping
- Include spare parts and reserve equipment

CONFIRM TRAVEL AND SAMPLE TEAM ACCOMMODATIONS AT SITE

CONFIRM TEST DATE AND PROCESS OPERATION

- Final step before travel arriving at site

ARRIVAL AT SITE

- Notify plant and regulatory agency personnel
- Review test plan with all concerned
- Check weather forecast
- Confirm process operation parameters in control room

SAMPLING FOR PARTICULATE EMISSIONS

- Carry equipment to sampling site
- Locate electrical connections
- Assemble equipment

DETERMINE APPROXIMATE MOLECULAR WEIGHT OF STACK GAS USING FYRITE AND NOMOGRAPHS

APPROXIMATE H_2O VAPOR CONTENT OF STACK GAS

USE NOMOGRAPH OR CALCULATOR TO SIZE NOZZLE AND DETERMINE C FACTOR

- Adjust for molecular weight and pitot tube C_p
- Set K pivot point on nomograph

RECORD ALL INFORMATION ON DATA SHEETS

- Sample case number
- Meter console number
- Probe length
- Barometric pressure
- Nozzle diameter
- C factor
- Assumed H_2O
- Team supervisor
- Observers present
- Train leak test rate
- General comments
- Initial DGM dial readings

LEAK TEST COMPLETELY ASSEMBLED SAMPLING TRAIN @ 15" Hg VACUUM AND MAXIMUM LEAK RATE OF 0.02 CFM

NOTIFY ALL CONCERNED THAT TEST IS ABOUT TO START

CONFIRM PROCESS OPERATING PARAMETERS

MONITOR PROCESS RATE

TAKE MATERIAL SAMPLES IF NECESSARY

TAKE CONTROL ROOM DATA

START SOURCE TEST

- Record start time
- Record gas velocity
- Determine ΔH desired from nomograph
- Start pump and set orifice meter differential manometer to desired ΔH
- Record
  1. Sample point
  2. Time from zero
  3. DGM dial reading
  4. Desired ΔH
  5. Actual ΔH
  6. All temperatures DGM, stack, sample case
- Maintain isokinetic ΔH at all times
- Repeat for all points on traverse

AT CONCLUSION OF TEST RECORD

- Stop time
- Final DGM
- Any pertinent observations on sample

PREPARE OTHER TRAINS FOR REMAINING SAMPLING

LEAK TEST SAMPLE TRAIN

- Test at highest vacuum (in. Hg) achieved during test
- Leak rate should not exceed 0.02 CFM
- Note location of any leak if possible

REPEAT PRECEDING STEPS FOR THREE PARTICULATE SAMPLES

REPACK EQUIPMENT AFTER SAMPLING IS COMPLETED

SAMPLE CLEAN-UP AND RECOVERY

- Clean samples in laboratory or other clean area removed from site and protected from the outdoors
- Note sample condition
- Store samples in quality assurance containers
- Mark and label all samples
- Pack carefully for shipping if analysis is not done on site

ANALYZE SAMPLES

- Follow Federal Register or State guidelines
- Document procedures and any variations employed
- Prepare analytical Report Data

CALCULATE

- Moisture content of stack gas
- Molecular weight of gas
- Volumes sampled at standard conditions
- Concentration/standard volume
- Control device efficiency
- Volumetric flow rate of stack gas
- Calculate pollutant mass rate

WRITE REPORT

- Prepare as possible legal document
- Summarize results
- Illustrate calculations
- Give calculated results
- Include all raw data (process & test)
- Attach descriptions of testing and analytical methods
- Signatures of analytical and test personnel

SEND REPORT WITHIN MAXIMUM TIME TO INTERESTED PARTIES

State of Wisconsin \ DEPARTMENT OF NATURAL RESOURCES
Carroll D. Besadny
Secretary
BOX 7921
MADISON, WISCONSIN 53707

CERTIFIED MAIL
RETURN RECEIPT REQUESTED

IN REPLY REFER TO: 4530-1

April 24, 1987

Mr. C. J. Mathy, Jr., Secretary
Mathy Construction Co., Plant #2
915 Commercial Court
Onalaska, WI 54650

AUG 1 2 1988

Dear Mr. Mathy:

Your application for an air pollution control permit has been processed in accordance with sec. 144.3925, Wis. Stats.

The enclosed permit is issued to provide authorization for your source to operate in accordance with the requirements and conditions set forth within Parts I and II of the permit. Please read it carefully.

A copy of this permit should be available at the source for inspection by any authorized representative of the Department. Questions about this permit should be directed to the Bureau of Air Management, P.O. Box 7921, Madison, Wisconsin 53707, (608) 266-7718.

NOTICE OF APPEAL RIGHTS

This decision is effective immediately unless a petition for a contested case hearing for administrative review of this decision is served on the Secretary of the Department of Natural Resources under section 144.403, Stats., within 30 days after the date of mailing of this decision. Any such petition for hearing shall set forth specifically the issue sought to be reviewed, the interest of the petitioner, the reasons why a hearing is warranted and the relief desired. This notice is provided pursuant to section 227.48(2), Stats.

STATE OF WISCONSIN
DEPARTMENT OF NATURAL RESOURCES

Raj Vakharia

Raj Vakharia
Bureau of Air Management

Enclosure

cc: Air Programs Branch - EPA, Region V
La Crosse Area Office - Air Program

9184R

AIR POLLUTION CONTROL PERMIT
MANDATORY OPERATION PERMIT
FOR AN EXISTING AIR CONTAMINANT SOURCE

FACILITY ID NO. 999013180 SIC NO. 2951

MANDATORY OPERATION PERMIT NO. 999013180-N01

TYPE OF SOURCE: Attainment Area Minor Source

THIS OPERATING PERMIT IS PERMANENT UNLESS ALTERED, REVOKED, OR SUSPENDED.

In compliance with the provisions of Chapter 144, Wis. Stats., and Chapters NR 400 to 499, Wis. Adm. Code,

Name of Source: Mathy Construction, Plant #2

Street Address: Portable

Principal Officer or Authorized Representative & Title:
Mr. C. J. Mathy Jr., Secretary

is authorized to operate a portable asphalt plant in accordance with the permit application dated February 6, 1985 and subsequent submittals in support of the application dated September 16, 1985 and July 30, 1986, February 24, 1987, April 13, 1987, April 16, 1987, and in accordance with the conditions stated herein.

This authorization requires compliance by the permit holder with the emission limitations, monitoring requirements and other terms and conditions set forth in Parts I and II hereof.

Dated at Madison, Wisconsin this 24th day of April, 1987.

STATE OF WISCONSIN
DEPARTMENT OF NATURAL RESOURCES
For the Secretary

By Donald Theiler
Donald F. Theiler, Director
Bureau of Air Management

7814R

PART I

SPECIFIC PERMIT CONDITIONS

BY CATEGORY OF EMISSION UNITS:

A. Portable Barber-Green Batch Asphalt Plant

1. Categorical Emission Limitation

Pollutant	Applicable Wis. Adm. Code or Wis. Statute	Limitation/Requirement
Particulate Matter	Section NR 415.05(1)(i), Wis. Adm. Code	0.3 lb particulate per 1,000 lb exhaust gas
Fugitive Particulate Matter	Section NR 415.04, Wis. Adm. Code	See Note 1 below
Visible Emissions	Section NR 431.05(1), Wis. Adm. Code	20% opacity
Malodorous	Section NR 429.03, Wis. Adm. Code	See Note 2 below
Sulfur Dioxide	Section NR 417.025, Wis. Adm. Code	92.16 pounds per hour**
Nitrogen Oxide	Section NR 428.03, Wis. Adm. Code	36.0 pounds per hour
Carbon Monoxide	Section NR 426.025, Wis. Adm. Code	4.0 pounds per hour
Hazardous Emission	Section NR 445.03, Wis. Adm. Code	See Note 3
Lead	Section NR 427.03, Wis. Adm. Code	0.77 pounds per hour*

NOTE 1: No person shall cause, allow, or permit any material to be handled, transported, or stored without taking precautions to prevent particulate matter from becoming airborne. Nor shall a person allow a structure, a parking lot, or a road to be used, constructed, altered, repaired, sand blasted, or demolished without taking such precautions.

NOTE 2: No person shall cause, allow, or permit emissions into the ambient air any substances in such quantities that an objectionable odor is determined to result unless preventative measures satisfactory to the Department are taken to abate or control such emissions.

NOTE 3:

Toxic or Hazardous Substances	Allowable Emission Rate
Chromium	0.05 pounds per hour
Cadmium	0.006 pounds per hour
HCl	7.2 pounds per hour
Xylene	1.02 pounds per hour
Toluene	0.742 pounds per hour

* Waste/used oil may not be burned in this asphalt plant if the lead concentration in the oil is greater than 400 ppm. Under federal requirements, any asphalt plant burning used oil after May 29, 1986, with a lead content of more than 100 ppm must make notification to EPA as per the requirements of 40 CFR Part 266, subpart E, see 266.44 published in the Federal Register Volume 50, No. 230, Friday, November 29, 1985.

** The source has agreed to 92.16 lbs. SO_2/hr. limit and 20 hours/day, 270 days/year operation, thus making their annual SO_2 emissions to 249 tons and a minor source.

---

2. Other Conditions:

   a. The sulfur content of the reprocessed fuel oil and #3 fuel oil shall not exceed 0.8% by weight.

   b. Waste/used oil may not be burned in this asphalt plant if oil containing PCBs has been added to the waste/used oil.

   c. Waste/used oil may not be burned in this asphalt plant unless the used oil meets the following specifications:

      Cadmium Concentration: 2 parts per million max.
      Chromium Concentration: 10 parts per million max.
      Total Halogens: 1500 parts per million max.**
      Lead Concentration: 400 parts per million maximum*
      Flash Point: 140°F, minimum

---

* Under federal requirements, any asphalt plant burning used oil after May 29, 1986, with a lead content of more than 100 parts per million must make notification to EPA as per the requirements of 40 CFR Part 266, Subpart E, sec. 266.44 published in the Federal Register Volume 50, No. 230, Friday, November 29, 1985.

** Any used oil with a halogen concentration exceeding 1000 ppm is presumed to be a hazardous waste by U.S. EPA, unless the oil supplier has rebutted that presumption. U.S. EPA would require compliance with hazardous waste transportation, storage and processing requirements when using such oil.

d. A representative sample shall be taken from each shipment of used oil received. Thate sample shall be analyzed by the permittee for flash point and the concentrations of arsenic, cadmium, chromium, lead and total halogens and the analysis retained by the permittee for three years. The Department will accept, in lieu of an analysis on each shipment, an analysis of a representative sample of the batch of used oil from which the shipment was taken. This analysis must be certified by the distributor of the used oil as being correct ad retained by the permittee for three years.

e. The roadways shall be watered as necessary to reduce fugitive dust emissions from vehicle traffic movement.

f. The plants operation be limited to 20 hours/day, 270 days/year.

g. Mathy Construction Company Plant No. 2 shall get relocation application approval prior to relocating and operating.

h. The company shall have permit on-site wherever they operate the plant.

i. The plant shall not be relocated to a site with a background 24-hour particulate concentration is greater than 72 micrograms per cubic meter and 24-hour SO_2 concentration is greater than 155 micrograms per cubic meter.

FOR DEPARTMENT USE ONLY:

As of February 11, 1987

	TSP	SO_2	NO_x	CO	HC	Pb	Other
Area Classifications:	Attainment Area for all pollutants						
Facility Classification:	Minor Source for all pollutants						

Other minor sources owned or operated by the company:

Sources	Locations
Mathy Construction, Plant 1	Portable
Mathy Construction, Plant 6	Medary Location
Mathy Construction, Plant 5	Portable

TOTAL FACILITY EMISSIONS:

Pollutants	Allowable Emissions		Emissions for 1985	
	Pounds Per Hour	Tons Per Year*	Pounds Per Hour	Tons Per Year
Particulates	59.4	160.38	10.93	4.92
SO_2	92.16	248	22.24	11.63
NO_x	36.0	97.2	17.00	8.10
HC	-	-	-	-
CO	4.0	10.8	1.42	0.74
Lead	0.77	2.1		

Other Pollutants:
(specify)

Chromium	0.05	0.135
Cadmium	0.006	0.016
HCl	7.2	19.64
Xylene	1.02	2.75
Toluene	0.742	2.00

* Based on 20 hours/day, 270 days/year operation.

7814R
4/22/87

SUMMARY OF TEST DATA
for AMERICAN ASPHALT PLANT #2

SAMPLING TRAIN DATA		Run #1	Run #2	Run #3
1. Sampling time, minutes		60	60	60
2. Sampling nozzle diameter, inches	Dn	0.180	0.180	0.180
3. Sampling nozzle area, sq.ft.	An	0.000177	0.000177	0.000177
4. Isokinetic variation, %	I	98.9	98.2	98.7
5. Sample gas volume, cubic feet	Vm	37.848	38.160	38.570
6. Avg.meter temperature, deg R	Tm	545.3	552.7	547.4
7. Avg.oriface pressure drop, in.H2O	dH	1.43	1.43	1.48
8. Total particulate collected, mg	Mn	88.80	100.20	103.60
VELOCITY TRAVERSE DATA				
9. Stack Area, sq.ft.	A	11.479	11.479	11.479
10. Abs.stack gas pressure, in.Hg.	Ps	30.19	30.14	30.13
11. Barometric pressure, in.Hg.	Pbar	30.25	30.20	30.19
12. Avg.stack temperature, deg R	Ts	690.67	691.83	689.79
13. Avg. sq.rt. velocity head (Cp=.84)		1.3828	1.3849	1.4007
14. Avg.stack gas velocity, ft./sec.	Vs	90.520	90.780	91.643
STACK MOISTURE CONTENT				
15. Total water collected, ml	Vic	143	142	142
16. Moisture in stack gas, %	Bws	15.47	15.36	15.10
EMISSIONS DATA				
17. Stack gas flow rate, dscf/hr.	Qsd	2439139	2441148	2478418
18. Particulate concentration, lb./hr.	E	12.82	14.58	15.01
19. Particulate concentration, lb./Mlb.		0.0622	0.0708	0.0719
FYRITE DATA				
20. Percent CO2 by volume	CO2	4.0	3.0	3.0
21. Percent O2 by volume	O2	17.0	17.0	16.0
22. Percent CO by volume	CO	0.0	0.0	0.0
23. Percent N2 by volume	N2	79.0	80.0	81.0

* DRY GAS VOLUME *

Vm(std) = Vm [T(std) / Tm] [(Pbar + (dH/13.6)) / P(std)]

= 17.64 x [degR / in.Hg.] x Y x Vm [(Pbar + (dH/13.6))/Tm]

Where:

Vm(std) = Dry Gas Volume through meter at standard conditions
Vm = Dry Gas Volume measured by meter
Pbar = Barometric pressure at oriface meter
Pstd = Standard absolute pressure
Tm = Absolute temperature at meter degR.
Tstd = Standard absolute temperature (528 degR).
dH = Average pressure drop across oriface meter
Y = Dry gas meter calibration factor.
13.6 = Inches water per inches Hg.

Run #1

Vm(std)=17.64 x1.000 x37.84 [(30.25 +(1.42 /13.6))/ 545] = 37.168 dscf
==========

Run #2

Vm(std)=17.64 x1.000 x38.16 [(30.2 +(1.42 /13.6))/ 553] = 36.908 dscf
==========

Run #3

Vm(std)=17.64 x1.000 x38.57 [(30.19 +(1.47 /13.6))/ 547] = 37.658 dscf
==========

* DRY MOLECULAR WEIGHT *

$$Md = 0.44\ (\%\ CO_2) + 0.32\ (\%\ O_2) + 0.28\ (\%\ CO + \%\ N_2)$$

Where:

Md	=	Dry molecular weight
% CO_2	=	Percent carbon dioxide by volume (dry basis).
% O_2	=	Percent oxygen by volume (dry basis).
% N_2	=	Percent nitrogen by volume (dry basis).
% CO	=	Percent carbon monoxide by volume (dry basis).
0.264	=	Ratio of O_2 to N_2 in air
0.28	=	Molecular wieght of N_2 or CO
0.32	=	Molecular wieght of O_2 divided by 100.
0.44	=	Molecular weight of CO_2 divided by 100.

Run #1

$$Md = 0.44\ (\ 4.0\ ) + 0.32\ (\ 17.0\ ) + 0.28\ (\ 79.0\ ) = \underline{\underline{29.320\ lb/lb\text{-}mole}}$$

Run #2

$$Md = 0.44\ (\ 3.0\ ) + 0.32\ (\ 17.0\ ) + 0.28\ (\ 80.0\ ) = \underline{\underline{29.160\ lb/lb\text{-}mole}}$$

Run #3

$$Md = 0.44\ (\ 3.0\ ) + 0.32\ (\ 16.0\ ) + 0.28\ (\ 81.0\ ) = \underline{\underline{29.120\ lb/lb\text{-}mole}}$$

* WATER VAPOR CONDENSED *

$$V_{wc(std)} = (V_f - V_i) \; [P_w \; R \; T_{(std)} / M_w \; P_{(std)}] = 0.04707 \; (V_f - V_i)$$

$$V_{wsg(std)} = (W_f - W_i) \; [R \; T_{(std)} / M_w \; P_{(std)}] = 0.04715 \; (W_f - W_i)$$

Where:

0.04707	=	Conversion factor
0.04715	=	Conversion factor
Vwc(std)	=	Volume of water vapor condensed (standard conditions)
Vwsg(std)	=	Volume of water vapor collected in silica gel (standard conditions)
Vf - Vi	=	Final volume of impinger contents less initial volume
Wf - Wi	=	Final weight of silica gel less initial weight
Pw	=	Density of water
R	=	Ideal gas constant
Mw	=	Molecular weight of water vapor
T(std)	=	Absolute temperature at standard conditions
P(std)	=	Absolute pressure at standard conditions

Run #1

Vwc(std) = 0.04707 x 129 ml = 6.1 cu.ft.

==========

Vwsg(std) = 0.04715 x 14 gr = 0.7 cu.ft.

==========

Run #2

Vwc(std) = 0.04707 x 127 ml = 6 cu.ft.

==========

Vwsg(std) = 0.04715 x 15 gr = 0.7 cu.ft.

==========

Run #3

Vwc(std) = 0.04707 x 130 ml = 6.1 cu.ft.

==========

Vwsg(std) = 0.04715 x 12 gr = 0.6 cu.ft.

==========

* MOISTURE CONTENT OF STACK GASES *

Bws = [Vwc(std) + Vwsg(std)] / [Vwc(std) + Vwsg(std) + Vm(std)] x 100

Where:

Bws = Proportion of water vapor
Vm = Dry gas volume measured by dry gas meter
Vwc(std) = Volume of water vapor condensed corrected to standard conditions
Vwsg(std) = Volume of water vapor collected in silica gel corrected to standard conditions

Run #1

Bws = (6.1 + 0.7) / (6.1 + 0.7 + 37.168) x 100 = 15.47 %

Run #2

Bws = (6 + 0.7) / (6 + 0.7 + 36.908) x 100 = 15.36 %

Run #3

Bws = (6.1 + 0.6) / (6.1 + 0.6 + 37.658) x 100 = 15.10 %

* MOLECULAR WEIGHT of STACK GASES *

Ms = Md (1- Bws) + 18 (Bws)

Where:

Ms = Molecular weight of stack gas
Md = Molecular weight of stack gas
Bws = Proportion of water vapor

Run #1

Ms = 29.28 (1 - 15.47 %) + 18 (15.47 %) = 27.53 lb/lb-mole

Run #2

Ms = 29.28 (1 - 15.36 %) + 18 (15.36 %) = 27.55 lb/lb-mole

Run #3

Ms = 29.28 (1 - 15.1 %) + 18 (15.1 %) = 27.58 lb/lb-mole

* STACK GAS VELOCITY *

Vs = Kp Cp [sq.rt.dP] x avg. [sq.rt.(Ts(avg.)/Ps Ms)]

Where :

Vs	=	Average velocity of gas stream in stack
Kp	=	85.49 ft/sec [(g/g-mole) - (mm Hg) / (degK) (mm H2O)] 1/2
Cp	=	Pitot tube coefficient
dP	=	Velocity head of stack gas
Pbar	=	Barometric pressure at measurement site
Pg	=	Stack static pressure
Ps	=	Absolute stack gas pressure
Pstd	=	Standard absolute pressure
ts	=	stack temperature
Ts	=	Absolute stack temperature
Ms	=	Molecular weight of stack gas

Run #1

Vs = 85.49 x 0.84 x 1.383 x Sq.Rt.[691 /(30.19 x27.53) = 90.520 ft/sec.
==========

Run #2

Vs = 85.49 x 0.84 x 1.385 x Sq.Rt.[692 /(30.14 x27.55) = 90.780 ft/sec.
==========

Run #3

Vs = 85.49 x 0.84 x 1.401 x Sq.Rt.[690 /(30.13 x27.58) = 91.643 ft/sec.
==========

* STACK GAS FLOW RATE *

Qstd = 3600 (1 - Bws) Vs A (Tstd / Ts) (Ps / Pstd)

Where :
Qstd = Dry volumetric stack gas flow rate corrected to std.conditions
A = Cross sectional area of stack
3600 = Conversion factor
ts = Stack temperature
Ts = Absolute stack temperature
Tstd = Standard absolute temperature
Pbar = Barometric pressure at measurement site
Pg = Stack static pressure
Ps = Absolute stack gas pressure
Pstd = Standard absolute pressure

Run #1

Q (std) = 3600(1- 0.1547)(90.52)(11.479)(528/690)(30.19 /29.92)

Q (std) = 2,439,139 dscf/hr

Run #2

Q(std) = 3600(1- 0.1536)(90.78)(11.479)(528/691)(30.14 /29.92)

Q (std) = 2,441,148 dscf/hr

Run #3

Q(std) = 3600(1- 0.151)(91.643)(11.479)(528/689)(30.13 /29.92)

Q (std) = 2,478,418 dscf/hr

* EMISSIONS RATE FROM STACK *

E = [Cs Qstd] / 7000 gr./lb. = lb. / hr.

Where :
E = Emissions rate
Cs = Concentration of particulate matter corrected to std.conditions.
Qstd = Dry volumetric stack gas flow rate corrected to std.conditions.

Run #1

E = [0 x 2,439,139] / 7000 = 0 lb./hr.

Run #2

E = [0 x 2,441,148] / 7000 = 0 lb./hr.

Run #3

E = [0 x 2,478,418] / 7000 = 0 lb./hr.

* ALLOWABLE EMISSIONS: LBS./1000 LBS. GAS *

$$\text{Lbs./Mlbs.Gas} = E \times 1000 \Big/ \left[\frac{Qstd \times Ms \times 29.92}{Md \times 528dF \times 21.85} \right]$$

Where:

Ms	=	Wet molecular weight
Mdry	=	Dry molecular weight of stack gas = 1 - % moisture/100.
Qstd	=	Dry volumetric stack gas flow rate corrected to std.conditions.
E	=	Emissions in pounds per hour.
528 dF	=	Standard Temperature
29.92	=	Standard Pressure
21.85	=	Unit COnversion

Run #1

$$\text{Lb./Mlb.} = \overset{12.82}{\cancel{0}} \times 1000 \Big/ \left[\frac{2{,}439{,}139 \times 27.53 \times 29.92}{(1 - 0.1547) \times 528 \times 21.85} \right] \quad [206{,}019]$$

= 0.0000 lbs./ 1000 lbs. of stack gas

Run #2

$$\text{Lb./Mlb.} = \overset{14.58}{\cancel{0}} \times 1000 \Big/ \left[\frac{2{,}441{,}148 \times 27.55 \times 29.92}{(1 - 0.1536) \times 528 \times 21.85} \right] \quad [206071]$$

= 0.0000 lbs./ 1000 lbs. of stack gas

Run #3

$$\text{Lb./Mlb.} = \overset{15.01}{\cancel{0}} \times 1000 \Big/ \left[\frac{2{,}478{,}418 \times 27.58 \times 29.92}{(1 - 0.151) \times 528 \times 21.85} \right] \quad [208{,}803]$$

= 0.0000 lbs./ 1000 lbs. of stack gas

* ISOKINETIC VARIATION *

$$I = 100\ Ts\ [0.002669\ Vic + (Vm / Tm)\ (Pbar + dH / 13.6)] / 60\ e\ Vs\ Ps\ An$$

Where :

I	=	Percent isokinetic sampling.
100	=	Conversion to percent.
Ts	=	Absolute average stack gas temperature
0.002669	=	Conversion factor
Vic	=	Total volume of liquid collected in impingers and silica gel
Tm	=	Absolute average dry gas meter temperature
Pbar	=	Barometric pressure at sampling site
dH	=	Average pressure differential across the oriface meter
13.6	=	Specific gravity of mercury.
60	=	Conversion seconds to minutes.
e	=	Total sampling time
Vs	=	Stack gas velocity
Ps	=	Absolute stack gas pressure
An	=	Cross sectional area of nozzle

Run #1

$$I = 100 \times 691 \frac{[(0.002669 \times 143) + (37.848 / 545)[30.25 + (1.425 / 13.6)]}{60 \times 60 \times 90.520 \times 30.19 \times 0.000177}$$

I = 98.9 %

Run #2

$$I = 100 \times 692 \frac{[(0.002669 \times 142) + (38.16 / 553)[30.2 + (1.425 / 13.6)]}{60 \times 60 \times 90.780 \times 30.14 \times 0.000177}$$

I = 98.2 %

Run #3

$$I = 100 \times 690 \frac{[(0.002669 \times 142) + (38.57 / 547)[30.2 + (1.476 / 13.6)]}{60 \times 60 \times 91.643 \times 30.13 \times 0.000177}$$

I = 98.7 %

Plant # & Location	=	American Asphalt Plant #2		
Date of Test	=	5/21/91		
Process Tested	=	Baghouse		
Number of Sampling Points	=	24		
Pitot Tube Coefficient	=	0.84		
Stack Area, sq.ft.	=	11.4792		
Y Factor	=	1.00		
		Run #1	Run #2	Run #3
Dry Gas Meter Volume, cfd.	=	37.848	38.160	38.570
Barometric Pressure, in.Hg.	=	30.25	30.20	30.19
Stack Pressure, in.Hg.	=	30.19	30.14	30.13
Total Water Collected, ml.	=	143	142	142
% Carbon Dioxide	=	4.0	3.0	3.0
% Oxygen	=	17.0	17.0	16.0
% Carbon Monoxide	=	0.0	0.0	0.0
% Nitrogen	=	79.0	80.0	81.0
Total Particulate, gr.	=	0.0888	0.1002	0.1036
Total Sampling Time, min.	=	60	60	60
Nozzle Diameter, inches	=	0.180	0.180	0.180 - .015
Nozzle Area, sq.ft.	=	0.0001767	0.0001767	0.0001767

MWD: 29.32 29.16 29.12

Run #1

Ts = 690.67 dH = 1.425000 Impinger Water = 129
Tm = 545.25 SR dP = 1.382778 Silica Gel = 14

Run #1 Point #	Stack Temp.	Velocity Pressure	Orifice Pressure	Meter Temperature Inlet	Meter Temperature Outlet	Sq.Root Velocity Pressure
1	228	1.4	1	68	67	1.18322
2	229	1.8	1.3	70	69	1.34164
3	229	1.8	1.3	71	70	1.34164
4	231	1.7	1.3	73	71	1.30384
5	228	2.1	1.6	77	73	1.44914
6	231	1.9	1.4	78	74	1.37840
7	228	1.5	1.1	81	77	1.22474
8	231	1.8	1.3	84	79	1.34164
9	228	2	1.5	85	81	1.41421
10	232	2.1	1.6	86	81	1.44914
11	232	2.3	1.7	90	84	1.51658
12	234	2.3	1.7	92	87	1.51658
13	228	1.8	1.3	90	87	1.34164
14	234	1.8	1.3	93	88	1.34164
15	229	2	1.5	94	89	1.41421
16	231	2.2	1.6	94	90	1.48324
17	229	2.4	1.8	95	90	1.54919
18	234	2.3	1.7	95	91	1.51658
19	230	1.7	1.3	94	92	1.30384
20	233	1.7	1.3	94	92	1.30384
21	237	1.6	1.2	95	94	1.26491
22	231	1.9	1.4	96	93	1.37840
23	233	2	1.5	95	93	1.41421
24	226	2	1.5	96	94	1.41421

$\frac{x}{13.6} = 6$

Run #2

Ts = 691.83 dH = 1.425000 Impinger Water = 127 ml
Tm = 552.71 SR dP ▫ 1.384934 Silica Gel = 15 gr

Run #2 Point #	Stack Temp.	Velocity Pressure	Orifice Pressure	Meter Temperature Inlet	Meter Temperature Outlet	Sq.Root Velocity Pressure
1	216	1.5	1.1	81	82	1.22474
2	231	1.8	1.3	82	82	1.34164
3	231	1.6	1.2	83	82	1.26491
4	232	1.8	1.3	85	83	1.34164
5	233	1.8	1.3	87	84	1.34164
6	230	2.4	1.8	89	86	1.54919
7	225	1.8	1.3	89	88	1.34164
8	233	1.6	1.2	91	89	1.26491
9	229	2.1	1.6	92	90	1.44914
10	234	2.4	1.8	94	90	1.54919
11	231	2.4	1.8	95	92	1.54919
12	235	2.4	1.8	96	93	1.54919
13	228	1.8	1.3	96	93	1.34164
14	231	1.9	1.4	97	94	1.37840
15	234	2	1.5	98	95	1.41421
16	233	2.4	1.8	99	96	1.54919
17	237	2.3	1.7	99	96	1.51658
18	233	1.8	1.3	99	96	1.34164
19	233	1.8	1.3	99	97	1.34164
20	234	1.5	1.1	100	98	1.22474
21	234	1.6	1.2	100	97	1.26491
22	234	1.8	1.3	100	98	1.34164
23	236	1.9	1.4	101	98	1.37840
24	237	1.9	1.4	101	98	1.37840

Run #3

Ts = 689.79 dH = 1.476667 Impinger Water = 130 ml
Tm = 547.42 SR dP = 1.400688 Silica Gel = 12 gr

Run #3 Point #	Stack Temp.	Velocity Pressure	Orifice Pressure	Meter Temperature Inlet	Meter Temperature Outlet	Sq.Root Velocity Pressure
1	203	1.8	1.3	72	72	1.34164
2	212	2	1.5	74	73	1.41421
3	221	1.6	1.2	76	74	1.26491
4	221	2	1.5	77	75	1.41421
5	223	2	1.5	80	76	1.41421
6	222	2.4	1.8	82	78	1.54919
7	226	1.7	1.3	83	80	1.30384
8	226	2	1.5	85	82	1.41421
9	229	2	1.5	87	83	1.41421
10	233	2.4	1.8	89	84	1.54919
11	230	2.3	1.7	90	85	1.51658
12	233	2.4	1.8	91	86	1.54919
13	233	1.8	1.3	92	88	1.34164
14	233	1.8	1.3	92	88	1.34164
15	233	2.1	1.6	94	89	1.44914
16	237	2.3	1.7	95	90	1.51658
17	242	2.3	1.7	95	90	1.51658
18	241	2.3	1.7	96	92	1.51658
19	237	1.7	1.3	97	93	1.30384
20	234	1.7	1.3	97	94	1.30384
21	235	1.1	0.84	98	95	1.04881
22	237	1.7	1.3	99	96	1.30384
23	235	2	1.5	100	96	1.41421
24	239	2	1.5	100	96	1.41421

MATHY CONSTRUCTION CO[illegible]ANY - ENVIRONMENTAL

lant American Asphalt Plant #2
ocation Arnott, WI
ate 5/2/91
perator Denis Keutchenmeister
mbient Temp. 63
un No. 2-1
ample Box No. 1
eter Box No. 1 5/6/91
eter ΔH@ 2.04 5/6/91
& Y Factors: C= 0.99 Y= 1.00
tot Tube Coeff. 0.84
robe Heater Setting 5
tatic Pressure, in.Hg. -.06
ilter No. 5

-----> Probe

1	2	3	4	5	6
7	8	9	10	11	12
13	14	15	16	17	18
19	20	21	22	23	24

Stack Cross Section
W= 38 " D=43.5" Area=11.4792SFt.

Barometric Press. 30.25
Assumed Moisture,% 18
Probe Length, ft 4
Nozzle I.D./Area .2257 / .000177 SF
Avg.Calibrated Nozzle Dia., (in.) .180
Leak Rate, cfm @ 15" Hg. .006 / .004 @ 5"
Probe Liner Material STAINLESS STEEL

	Final		Initial		Diff.
Impinger 1 Vol.:	209	-	100	=	109
Impinger 2 Vol.:	120	-	100	=	20
Impinger 3 Vol.:	0	-	0	=	0
Silica Gel Wt. :	214	-	200	=	14
			Total Volume	=	143

Point No.	Sample Time (min.)	Stack Temp. (oF) 1	Velocity Head (in.H2O) (Stack)	Press.Dif Orf.Meter (in.H2O) (Meter)	Filter Holder Temp. 3	Gas Temp. @ Last Impinger 4	Gas Sample Temp. @ Dry Gas Meter Inlet 5	Outlet 6	Vacuum (in.Hg.)	Gas Volume (cft) 37.848
1	8:00 / 2.5 min	228	1.4	1.0	199	40	68	67	2	316.152 / 17.49
2		229	1.8	1.3	212	38	70	69	3	18.96
3		229	1.8	1.3	224	37	71	70	3	20.43
4		231	1.7	1.3	225	38	73	71	3	21.92
5		228	2.1	1.6	237	39	77	73	3	23.54
6		231	1.9	1.4	238	41	78	74	3	25.15
7		228	1.5	1.1	241	43	81	77	3	26.55
8		231	1.8	1.3	249	43	84	79	3	28.06
9		228	2.0	1.5	247	44	85	81	3	29.66
10		232	2.1	1.6	251	43	86	82	3	31.32
11		232	2.3	1.7	258	44	90	84	4	33.03
12		234	2.3	1.7	258	44	92	87	4	34.78

n No. 2- (cont'd.)

oint No.	Sample Time (min.)	Stack Temp. (oF) 1	Velocity Head (in.H2O) (Stack)	Press.Dif Orf.Meter (in.H2O) (Meter)	Filter Holder Temp. 3	Gas Temp. @ Last Impinger 4	Gas Sample Temp. @ Dry Gas Meter Inlet 5	Gas Sample Temp. @ Dry Gas Meter Outlet 6	Vacuum (in.Hg.)	Gas Volume (cft)
13		228	1.8	1.3	258	44	90	87	3	36.30
14		234	1.8	1.3	261	43	93	88	3	37.82
15		229	2.0	1.5	258	44	94	89	3	39.44
16		231	2.2	1.6	257	45	94	90	4	41.12
17		229	2.4	1.8	249	47	95	90	4	42.90
18		234	2.3	1.7	261	46	95	91	4	44.63
19		230	1.7	1.3	262	46	94	92	3	46.14
20		233	1.7	1.3	265	46	94	92	3	47.66
21		237	1.6	1.2	271	46	95	94	3	49.13
22		231	1.9	1.4	276	46	96	93	4	50.70
23		233	2.0	1.5	274	48	95	93	4	52.35
24	9:02	226	2.0	1.5	274	50	96	94	4	54.000

MATHY CONSTRUCTION CO ANY - ENVIRONMENTAL

lant American Asphalt Plant #2
ocation Arnott, WI
ate 5/21/91
perator Denis Keutchenmeister
mbient Temp. 60°
un No. 2-2
ample Box No. 2
eter Box No. 1
eter ΔH@ 2.04
& Y Factors: C= 0.99 Y= 1.00
itot Tube Coeff. 0.84
robe Heater Setting 5
tatic Pressure, in.Hg. -.06
ilter No. 6

-----> Probe

1	2	3	4	5	6
7	8	9	10	11	12
13	14	15	16	17	18
19	20	21	22	23	24

Stack Cross Section
W= 38 " D=43.5" Area=11.4792SFt.

Barometric Press. 30.20
Assumed Moisture,% 15
Probe Length,ft 4
Nozzle I.D./Area .2257 / .000177 SF
Avg.Calibrated Nozzle Dia., (in.) .180
Leak Rate,cfm @ 15" Hg. .010 / .012@ 4"
Probe Liner Material Stainless Steel

	Final		Initial		Diff.
Impinger 1 Vol.:	207	-	100	=	107
Impinger 2 Vol.:	120	-	100	=	20
Impinger 3 Vol.:	0	-	0	=	0
Silica Gel Wt. :	215	-	200	=	15
			Total Volume	=	142

Point No.	Sample Time (min.)	Stack Temp. (oF) 1	Velocity Head (in.H2O) (Stack)	Press.Dif Orf.Meter (in.H2O) (Meter)	Filter Holder Temp. 3	Gas Temp. @ Last Impinger 4	Gas Sample Temp. @ Dry Gas Meter Inlet 5	Outlet 6	Vacuum (in.Hg.)	Gas Volume (cft)
										38.160
1	9:45 / 2.5min	216	1.5	1.1	185	44	81	82	3	354.131 / 55.5
2		231	1.8	1.3	192	42	82	82	3	56.94
3		231	1.6	1.2	197	41	83	82	3	58.41
4		232	1.8	1.3	201	40	85	83	3	59.92
5		233	1.8	1.3	212	41	87	84	3	61.45
6		230	2.4	1.8	197	41	89	86	4	63.17
7		225	1.8	1.3	207	42	89	88	4	64.79
8		233	1.6	1.2	210	42	91	89	3	66.17
9		229	2.1	1.6	218	41	92	90	4	67.84
10		234	2.4	1.8	226	41	94	90	4	69.60
11		231	2.4	1.8	232	41	95	92	4	71.38
12		235	2.4	1.8	230	42	96	93	4	73.16

n No. 2-2 (cont'd.)

Point No.	Sample Time (min.)	Stack Temp. (oF) 1	Velocity Head (in.H2O) (Stack)	Press.Dif Orf.Meter (in.H2O) (Meter)	Filter Holder Temp. 3	Gas Temp. @ Last Impinger 4	Gas Sample Temp. @ Dry Gas Meter Inlet 5	Gas Sample Temp. @ Dry Gas Meter Outlet 6	Vacuum (in.Hg.)	Gas Volume (cft)
13		228	1.8	1.3	233	43	96	93	4	74.73
14		231	1.9	1.4	219	44	97	94	4	76.33
15		234	2.0	1.5	233	42	98	95	4	77.93
16		233	2.4	1.8	237	43	99	96	4	79.69
17		237	2.3	1.7	242	43	99	96	4	81.45
18		233	1.8	1.3	245	46	99	96	4	83.05
19		233	1.8	1.3	243	48	99	97	4	85.00
20		234	1.5	1.1	246	49	100	98	3	86.10
21		234	1.6	1.2	250	52	100	97	4	87.53
22		234	1.8	1.3	239	54	100	98	4	89.07
23		236	1.9	1.4	250	57	101	98	4	90.66
24	10:50	237	1.9	1.4	251	59	101	99	4	92.291

MATHY CONSTRUCTION CO ANY - ENVIRONMENTAL

lant American Asphalt Plant #2
ocation Arnott, WI
ate 5/21/91
perator Denis Keutchenmeister
mbient Temp. 65°
un No. 2-3
ample Box No. 3
eter Box No. 1
eter ΔH@ 2.04
& Y Factors: C= 0.99 Y= 1.00
itot Tube Coeff. 0.84
robe Heater Setting 5
tatic Pressure, in.Hg. -.06
ilter No.

-----> Probe

1	2	3	4	5	6
7	8	9	10	11	12
13	14	15	16	17	18
19	20	21	22	23	24

Stack Cross Section
W= 38" D=43.5" Area=11.4792SFt.

Barometric Press. 30.19
Assumed Moisture,% 15
Probe Length,ft 4
Nozzle I.D./Area .2257 / .000177 SF
Avg.Calibrated Nozzle Dia., (in.)
Leak Rate,cfm @ 15" Hg. .0101 .006@4"
Probe Liner Material STAINLESS STEEL

	Final		Initial		Diff.
Impinger 1 Vol.:	208	-	100	=	108
Impinger 2 Vol.:	122	-	100	=	22
Impinger 3 Vol.:	0	-	0	=	0
Silica Gel Wt. :	212	-	200	=	12
			Total Volume	=	142

Point No.	Sample Time (min.)	Stack Temp. (oF) 1	Velocity Head (in.H2O) (Stack)	Press.Dif Orf.Meter (in.H2O) (Meter)	Filter Holder Temp. 3	Gas Temp. @ Last Impinger 4	Gas Sample Temp. @ Dry Gas Meter Inlet 5	Outlet 6	Vacuum (in.Hg.)	Gas Volume (cft) 38.570
1	1:08 / 2.5m	203	1.8	1.3	248	45	72	72	2	392.512 / 94.21
2		212	2.0	1.5	248	44	74	73	2	95.78
3		221	1.6	1.2	246	44	76	74	2	97.34
4		221	2.0	1.5	242	44	77	75	2	98.89
5		223	2.0	1.5	226	45	80	76	2	00.43
6		222	2.4	1.8	222	46	82	78	2	02.019
7		226	1.7	1.3	222	46	83	80	2	03.69
8		226	2.0	1.5	207	46	85	82	2	05.16
9		229	2.0	1.5	219	46	87	83	2	06.77
10		233	2.4	1.8	215	47	89	84	3	08.39
11		230	2.3	1.7	202	47	90	85	3	10.07
12		233	2.4	1.8	210	48	91	86	3	11.805

n No. 2- (cont'd.)

oint No.	Sample Time (min.)	Stack Temp. (oF) 1	Velocity Head (in.H2O) (Stack)	Press.Dif Orf.Meter (in.H2O) (Meter)	Filter Holder Temp. 3	Gas Temp. @ Last Impinger 4	Gas Sample Temp. @ Dry Gas Meter Inlet 5	Outlet 6	Vacuum (in.Hg.)	Gas Volume (cft)
13		233	1.8	1.3	214	49	92	88	2	13.35
14		233	1.8	1.3	210	48	92	88	2	14.91
15		233	2.1	1.6	208	48	94	89	3	16.54
16		237	2.3	1.7	213	48	95	90	3	18.24
17		242	2.3	1.7	209	48	96	91	3	19.95
18		241	2.3	1.7	212	47	96	92	3	21.66
19		237	1.7	1.3	204	48	97	93	2	23.27
20		234	1.7	1.3	204	49	97	94	2	24.81
21		235	1.1	.84	197	50	98	95	2	26.32
22		237	1.7	1.3	196	50	99	96	2	27.86
23		235	2.0	1.5	198	50	100	96	2	29.45
24		239	2.0	1.5	206	52	100	96	2	431.082

MATHY CONSTRUCTION COMPANY - ENVIRONMENTAL
PLANT DATA

Date - 5-21-91 Aggregate Moisture - 2.5 %

Plant Number - 2 Operator - John adams

Plant Location - Arnott

Plant Manufacturer - Barber Greene

Plant Model / Type - Batch

Burner Fuel Type - R-5 fuel

Mix Type - Hot Oil Type - 120/150 - 85/100

	Time	Burner Setting	Total Tonnage TPH	Aggregate TPH	Recycle TPH	Liquid Asphalt TPH	Mix Temp. F	Pressure Drop In./H2O
	7:30	6 %	250		—		305	10
	8:00	5 %	"		—		300	9
Run 1	8:30	7 %	260		—		310	10
	9:00	6 1/2 %	~~260~~		—		300	9
	30	6 %	240		—		305	10
	10:00	7 %	~~25~~		—		360	11
2	10:30	6 1/2	250		—		300	10
	11:00	6 %	—				300	11
	11:30	—						
	12:00	—	—					
	12:30	—						
	1:00	7 %	—					11
3	1:30	7 %	—					11
	2:00	6 1/2 %	220				305	11
			1220/5 =250					

B

MATHY CONSTRUCTION COMPANY - ENVIRONMENTAL
FYRITE ANALYSIS, STACK PRESSURE, & PERCENT MOISTURE

Fvrite Analysis :
·ner Fuel Type - WASTE OIL

Run #2-1 :
CO2 = 4.0 % (from Fyrite)
O2 = 17.0 % (from Fyrite)
N2 = 100% - CO2% - O2% = 100% - 4.0 % - 17.0 % = 79.0 %

Run #2-2 :
CO2 = 3.0 % (from Fyrite)
O2 = 17.0 % (from Fyrite)
N2 = 100% - CO2% - O2% = 100% - 3.0 % - 17.0 % = 80.0 %

Run #2-3 :
CO2 = 3.0 % (from Fyrite)
O2 = 16.0 % (from Fyrite)
N2 = 100% - CO2% - O2% = 100% - 3.0 % - 16.0 % = 81.0 %

==========

Stack Pressure :
Ps = -.85 in.H2O/13.6) = -.06 in.Hg.

==========

Percent Moisture :	Run #1	Run #2	Run #3
Dry Bulb Temp.deg.F =	FROM	FROM	FROM
Wet Bulb Temp.deg.F =	PREVIOUS	RUN 2-1	RUN 2-2
Difference =	RUN		
% Moisture (graph) =	18 %	15 %	15 %

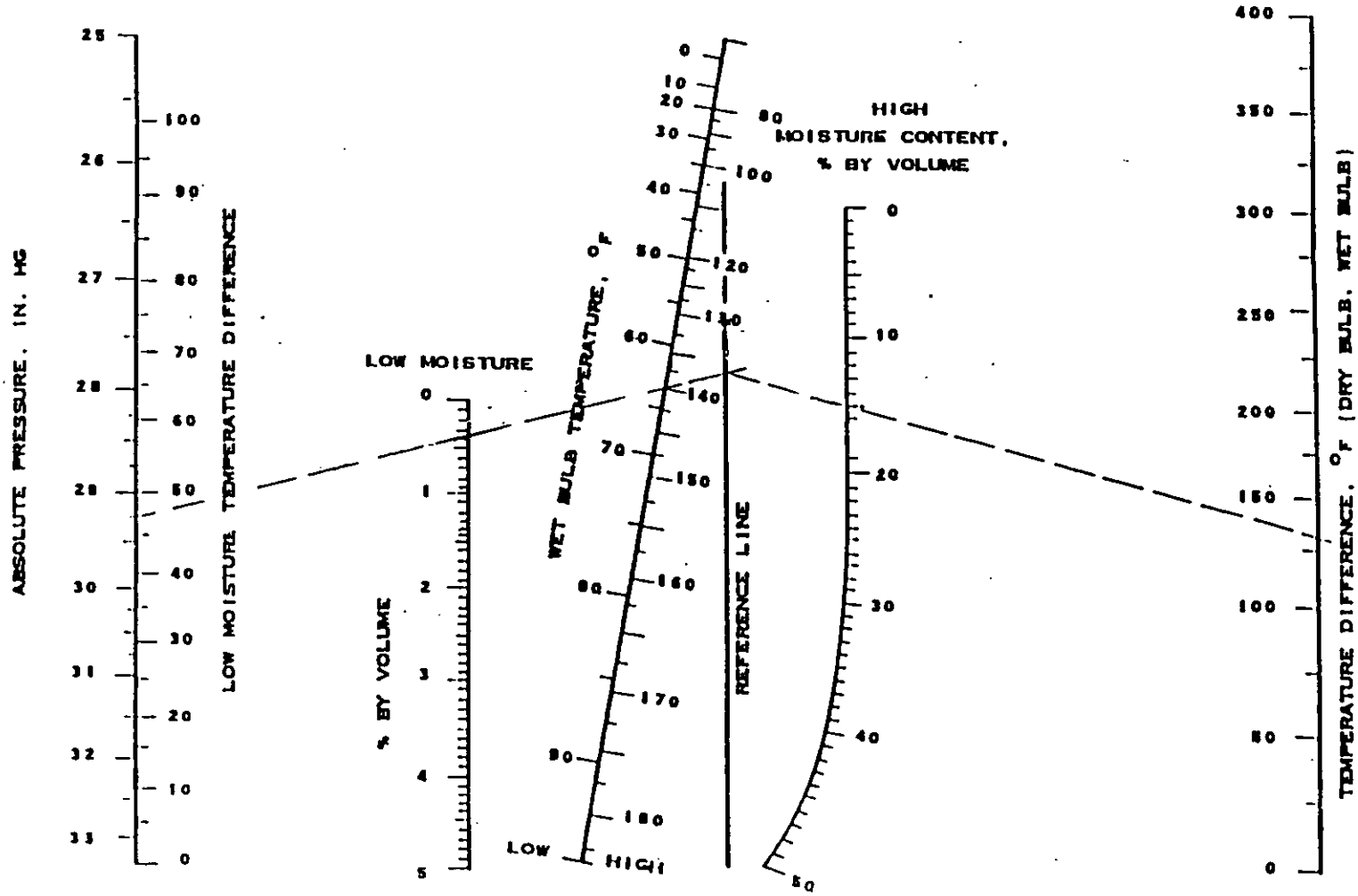

Visible Emission Observation Form

SOURCE NAME	American Asphalt Plant 2
ADDRESS	4807 Custer Road
CITY	Stevens Point
STATE	Wis
ZIP	54481
PHONE	715-341-1953
SOURCE ID NUMBER	999013180
PROCESS EQUIPMENT	Barber Greene Batch Pl.
OPERATING MODE	300 Ton/Hr.
CONTROL EQUIPMENT	Barber Greene Baghouse
OPERATING MODE	97 %
DESCRIBE EMISSION POINT START	Exhaust Stack
STOP	Exhaust Stack
HEIGHT ABOVE GROUND LEVEL START	30
STOP	30
HEIGHT RELATIVE TO OBSERVER START	30
STOP	30
DISTANCE FROM OBSERVER START	150'
STOP	150'
DIRECTION FROM OBSERVER START	W
STOP	W
DESCRIBE EMISSIONS START	Baghouse Exhaust
STOP	Baghouse Exhaust
EMISSION COLOR START	Gray
STOP	Gray
PLUME TYPE: CONTINUOUS ☐ FUGITIVE ☐ INTERMITTENT ☐	
WATER DROPLETS PRESENT: NO ☑ YES ☐	
IF WATER DROPLET PLUME: ATTACHED ☐ DETACHED ☐	
POINT IN THE PLUME AT WHICH OPACITY WAS DETERMINED START	6' Above Stack
STOP	6' Above Stack
DESCRIBE BACKGROUND START	Sky
STOP	Sky
BACKGROUND COLOR START	Gray
STOP	Gray
SKY CONDITIONS START	P Cloudy
STOP	P Cloudy
WIND SPEED START	5
STOP	5
WIND DIRECTION START	SE
STOP	SE
AMBIENT TEMP. START	76
STOP	76
WET BULB TEMP.	
RH percent	

OBSERVATION DATE	START TIME	STOP TIME
5-21-91	10:03 AM	10:33 AM

MIN \ SEC	0	15	30	45	MIN \ SEC	0	15	30	45
1	0	0	0	5	31				
2	0	5	0	0	32				
3	0	5	0	0	33				
4	0	0	0	0	34				
5	5	0	0	0	35				
6	0	0	5	0	36				
7	0	0	0	0	37				
8	0	0	5	0	38				
9	0	0	0	0	39				
10	0	0	0	0	40				
11	0	5	0	5	41				
12	0	0	0	0	42				
13	0	0	0	0	43				
14	0	5	0	5	44				
15	0	0	0	0	45				
16	0	0	0	0	46				
17	0	0	0	0	47				
18	0	5	0	0	48				
19	5	0	5	0	49				
20	0	0	0	0	50				
21	0	5	0	0	51				
22	0	0	0	0	52				
23	0	0	0	0	53				
24	0	0	0	0	54				
25	0	0	5	5	55				
26	0	0	0	0	56				
27	0	0	0	0	57				
28	5	0	0	5	58				
29	0	0	0	0	59				
30	0	0	5	0	60				

Source Layout Sketch

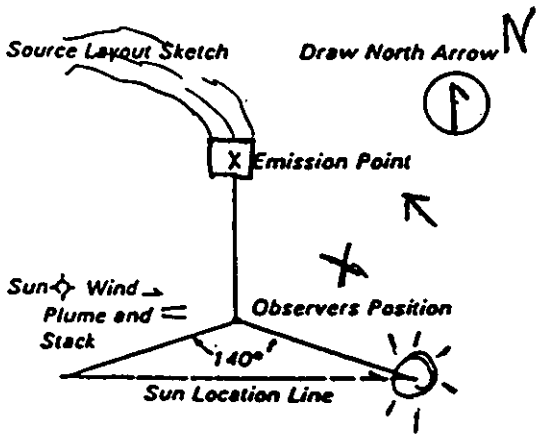

AVERAGE OPACITY FOR HIGHEST PERIOD 1.0 %

NUMBER OF READINGS ABOVE 40 % WERE 0

RANGE OF OPACITY READINGS 0 % MINIMUM 5 % MAXIMUM

OBSERVER'S NAME (PRINT) Denis Kuechenmeis Jr

COMMENTS

OBSERVER'S SIGNATURE Denis Kuechenmeis Jr

DATE 5-21-91

ORGANIZATION American Asphalt

I HAVE RECEIVED A COPY OF THESE OPACITY OBSERVATIONS

SIGNATURE

TITLE

DATE

CERTIFIED BY Joe Perez

DATE 4/9/91

VERIFIED BY

DATE 5/21/91

Plant # 2
- ---------

Date:5/21/91
Time:10:03 A.M.

Results:
Average Opacity ---> 1.0%
for Highest Period
(Max.Allowed is 40% for this Plant)

Minimum Reading - 0 %

Maximum Reading - 5 %

	0	15	30	45	6 Minute Average
1	0	0	0	5	
2	0	5	0	0	
3	0	5	0	0	
4	0	0	0	0	
5	5	0	0	0	
6	0	0	5	0	1.0%
7	0	0	0	0	0.8%
8	0	0	5	0	0.8%
9	0	0	0	0	0.6%
10	0	0	0	0	0.6%
11	0	5	0	5	0.8%
12	0	0	0	0	0.6%
13	0	0	0	0	0.6%
[illegible]	0	5	0	5	0.8%
15	0	0	0	0	0.8%
16	0	0	0	0	0.8%
17	0	0	0	0	0.4%
18	0	5	0	0	0.6%
19	5	0	5	0	1.0%
20	0	0	0	0	0.6%
21	0	5	0	0	0.8%
22	0	0	0	0	0.8%
23	0	0	0	0	0.8%
24	0	0	0	0	0.6%
25	0	0	5	5	0.6%
26	0	0	0	0	0.6%
27	0	0	0	0	0.4%
28	5	0	0	5	0.8%
29	0	0	0	0	0.8%
30	0	0	5	0	1.0%

MATHY CONSTRUCTION COMPANY - ENVIRONMENTAL
PARTICULATE LAB ANALYSIS - NON NSPS SOURCES

'1 't Location PLANT 2 - ARNOTT, WI Relative Humidity 50 %

lethylene Chloride Blank Analysis:

Blank Volume ml _____

Date Weighed A & A LABS Gross Wt g _____

Date Weighed _____ Gross Wt g _____

Average Gross Wt g _____

Tare Wt g _____

Weight of Methylene Chloride Blank g _____

.cetone Blank Analysis:

Blank Volume ml 100

Date Weighed 5/22/91 Gross Wt g 104.6683

Date Weighed 5/23/91 Gross Wt g 104.6685

Average Gross Wt g 104.6684

Tare Wt g 104.6668

Weight of Acetone Blank g 0.0016

lote: In no case should a blank residue greater than 0.01 mg/g be subtracted from the sample weight.

MATHY CONSTRUCTION COMPANY - ENVIRONMENTAL
PARTICULATE LAB ANALYSIS - NON NSPS SOURCES

F'T HALF ANALYSIS

	Run #	2-1	2-2	2-3
cetone Rinse:	Sample Volume ml	135	125	150
Date Weighed 5/31/91	Gross Wt g	105.2795	106.8535	102.7745
Date Weighed 6/1/91	Gross Wt g	105.2796	106.8540	102.7750
	Average Gross Wt g	105.2796	106.8538	102.7748
	Tare Wt g	105.2399	106.8199	102.7304
	Less Acetone Blank Wt (Mab) g	0.0022	0.0020	0.0024
	Wt of Particulate in Acetone Rinse g	0.0375	.0409	.0420
ilter Weights:	Filter #	5	6	7
Date Weighed 5/23/91	Gross Wt g	.4105	.4280	.4141
Date Weighed 5/24/91	Gross Wt g	.4110	.4282	.4138
	Average Gross Wt g	.4108	.4281	.4140
	Tare Wt g	.4022	.4163	.4122
	Wt of Particulate on Filter g	.0086	.0118	.0018
	Wt of Particulate in Acetone Rinse g	.0375	.0409	.0420
	Wt of Particulate on Filter g	.0096	.0113	.0018
	Total Weight from Front Half Analysis g	.0461	.0527	.0438

MATHY CONSTRUCTION COMPANY - ENVIRONMENTAL
PARTICULATE LAB ANALYSIS - NON NSPS SOURCES

BACK HALF ANALYSIS

Methylene Chloride Rinse:	Run #	2-1	2-2	2-3
Methylene Chloride Rinse Volume (Vmc) ml				
Date Weighed From A & A LABS	Gross Wt g			
Date Weighed	Gross Wt g			
	Average Gross Wt g			
	Tare Wt g			
Less Methylene Chloride Blank Wt (Mmcb) g				
Wt of Particulate in ~~Methylene Chloride~~ TRICHLOROETHANE Rinse g		0.0019	0.0011	0.0020
Water Evaporation:	Volume ml			
Date Weighed From A & A LABS	Gross Wt g			
Date Weighed	Gross Wt g			
	Average Gross Wt g			
	Tare Wt g			
Weight of Particulate from Water g		0.0400	0.0462	0.0577
Acetone Rinse:	Sample Volume ml	20	20	30
Date Weighed 5/29/91	Gross Wt g	104.2936	103.4394	105.0402
Date Weighed 5/31/91	Gross Wt g	104.2934	103.4395	105.0400
	Average Gross Wt g	104.2935	103.4395	105.0401
	Tare Wt g	104.2924	103.4390	105.0395
Less Acetone Blank Wt (Mab) g		.0003	.0003	.0005
Wt of Particulate in Acetone Rinse g		.0008	.0002	.0001
Wt of Particulate in ~~Methylene Chloride~~ TRICHLOROETHANE Rinse g		.0019	.0011	.0020
Weight of Particulate from Water g		.0400	.0462	.0577
Wt of Particulate in Acetone Rinse g		.0008	.0002	.0001
Total Wt from Back Half Analysis g		.0427	.0475	.0598
Total Wt from Front Half Analysis g		.0461	.0527	.0438
TOTAL WEIGHT OF PARTICULATE g		.0888	.1002	.1036

HEMICAL LABORATORY

2400 Diagonal Road
La Crosse, WI 54601
(608) 788-4425

DATE: 7-11-91

REPORTED TO: Jim Treyba
American Asphalt
Eau Claire, Wisconsin

NR149 Certification No.: 632021500

LABORATORY REPORT

TESTS AND RESULTS: Particulate Results, Method 5, Backhalf Analysis
Impingers 1, 2, & 3

Sample Desc.	Sample Date	Lab No.	Weight Particulate from: Water Phase	1,1,1-Trichloro*
Plant 2: 1P	5-21-91	1052806	0.0400 g	0.0019 g
2P	"	"	0.0462 g	0.0011 g
3P	"	"	0.0577 g	0.0020 g

* = 1,1,1-Trichloroethane Extraction

Report submitted by:

Kari Johnson

Kari L. Johnson
Operations Manager

As a mutual protection to clients, the public and ourselves, all reports are submitted as the confidential property of clients and authorization fr publication of statements, conclusions or extracts from or regarding ou reports is reserved pending our written approval. Our reports apply only to the sample tested.

NAME: MILLIKY CONSTRUCTION CO.
SERVICE ADDRESS
MAILING ADDRESS: 832 HWY. 153 EAST
CITY: MOSINEE STATE: WI ZIP: 54476
DATE: 050619 /M CUSTOMER ACCOUNT NO.

COST CENTER 10421C
CUSTOMER COPY

DISP	ARR	LEFT	DATE

'STOMER PHONE NO. 715 693 5200 CODE

INSTRUCTIONS
CERTIFICATION TEST
1/4 perform test.

RESULTS
OPEN - 100.6 %
CHECK - 100.2 %

LEAK REPORT NO.
APPLIANCE INSPECTION E
W.C. W.C.
PO. VEND.

BY ASD. BY

MAT'L	EA	AMOUNT	DATE	EMP	W.O. NO. LOC.	W.O. NO. PRIM	YR. SUB	ACCOUNT LTR	ACCOUNT Veh/Proj	EST. NO. Cost Ele	RATE R	RATE OT	RATE CO	AMOUNT	Truck No.	HR./Mi.	AMOUNT
Ells																	
St. Ells																	
Tees																	
Coup.																	
Bush.																	
Nipples																	
Unions																	
Pipe																	

CONTRIBUTION / ADVANCE

(b) Total Labor

(c) Total Vehicle

REFERENCE WORK ORDER DATA

Ref. W.O. No.	Year	Account No.	Est. No.

BILLING DATA

W.O. NO. LOC.	W.O. NO. PRIM	YR. SUB	ACCOUNT LTR	ACCOUNT Veh/Proj	EST. NO. Cost Ele	AMOUNT

BILL	D.N.B.	AUTHORIZED	CREDIT

(a + b + c) TOTAL REVENUE

(a) TOTAL MATERIAL

Form 159-8002 Rev. 8/86

WISCONSIN PUBLIC SERVICE CORPORATION

ORIFACE CALIBRATION DATA SHEET

Date: May 6, 1991 Meter #: 1 Barometric Pressure: 29.71
'ozzle S/N: 2557 Inside Diameter: 0.180

Orifice manometer setting dH in.H20	Gas Volume Initial Reading V1 cf	Final Reading V2 cf	Volume V2-V1 cf	Time Min.	Temperature Dry gas meter Inlet T1 dF	Outlet T2 dF	Qm cfm	Km
1: 0.5	71.000	71.778	0.778	2	80	76	0.3876	0.695
2: 1	72.000	73.083	1.083	2	81	77	0.5395	0.683
3: 2	74.000	75.508	1.508	2	83	78	0.7505	0.672
4: 6	76.000	78.515	2.515	2	86	79	1.2494	0.645

Calculations:

Qm = [(V2-V1)/Time] x [(T2+460)/(((T2+T1)/2)+ 460)]

Km = Qm x Square Root ((Pm x Mm)/(Tm x dH))

where: Pm = P atmosphere
Mm = M (air) = 29
Tm = T2 + 460

Average Km = Sum of Km/4 = : 0.67375

dH@ = 0.9244/(km2) = : 2.036

MATHY CONSTRUCTION COMPANY - ENVIRONMENTAL
THERMOCOUPLE CALIBRATION

te 5/6/91 Thermocouple Location IMPINGERS

Ambient Temperature 73° F Barometric Pressure 29.96

Calibrator JIM TRUBA Reference: Mercury-in-glass X

Other

Reference Point Number (a)	Source (specify) (b)	Reference Thermometer Temperature	Thermocouple Potentiometer Temperature	Temperature Difference (c)
A	AMBIENT	73°F	73°F	0
B	ICE BATH	32°F	32°F	0
C	BOILING WATER	212°F	211°F	-0.5%

(a) Every 30° C (50° F) for each reference point.

(b) Type of calibration system used.

(c) $\left[\frac{\text{(Reference Temperature - Thermocouple Temperature)}}{\text{Reference Temperature}}\right] \times 100 \quad < 1.5\ \%$ =

MATHY CONSTRUCTION COMPANY - ENVIRONMENTAL
THERMOCOUPLE CALIBRATION

te 5/6/91 Thermocouple Location PROBE

Ambient Temperature 73°F Barometric Pressure 29.96

Calibrator JIM TRUEA Reference: Mercury-in-glass X

Other

Reference Point Number (a)	Source (specify) (b)	Reference Thermometer Temperature	Thermocouple Potentiometer Temperature	Temperature Difference (c)
A	AMBIENT	73°F	72°F	-1.4 %
B	ICE BATH	32°F	32°F	0
C	BOILING WATER	212°F	213°F	+0.5 %

(a) Every 30° C (50° F) for each reference point.

(b) Type of calibration system used.

(c) $\left[\frac{\text{(Reference Temperature - Thermocouple Temperature)}}{\text{Reference Temperature}}\right] \times 100 \quad < 1.5\ \% \quad =$

MATHY CONSTRUCTION COMPANY - ENVIRONMENTAL
THERMOCOUPLE CALIBRATION

Date 5/6/91 Thermocouple Location GAS METER INLET + OUTLET

Ambient Temperature 72°F Barometric Pressure 29.96

Calibrator Jim Thysa Reference: Mercury-in-glass X

Other

Reference Point Number (a)	Source (specify) (b)	Reference Thermometer Temperature	Thermocouple Potentiometer Temperature	Temperature Difference (c)
A	AMBIENT	72°F	INLET - 72°F OUTLET - 71°F	0 -1.4%
B	ICE BATH	32°F	INLET - 32°F OUTLET - 32°F	0 0
C	BOILING WATER	212°F	INLET - 211°F OUTLET - 210°F	-.5% -.9%

(a) Every 30° C (50° F) for each reference point.

(b) Type of calibration system used.

(c) $\left[\frac{\text{(Reference Temperature - Thermocouple Temperature)}}{\text{Reference Temperature}}\right] \times 100 \leq 1.5\ \%$