Note: This is a reference cited in *AP 42, Compilation of Air Pollutant Emission Factors, Volume I Stationary Point and Area Sources.* AP42 is located on the EPA web site at www.epa.gov/ttn/chief/ap42/

The file name refers to the reference number, the AP42 chapter and section. The file name "ref02_c01s02.pdf" would mean the reference is from AP42 chapter 1 section 2. The reference may be from a previous version of the section and no longer cited. The primary source should always be checked.

RAMCON ENVIRONMENTAL CORPORATION

RAMCON BUILDING 223 SCOTT STREET MEMPHIS, TENNESSEE 38112 TELEPHONE 901 / 458-7000 TELEX 53-806

SOURCE SAMPLING
for
PARTICULATE EMISSIONS
GENSTAR STONE PRODUCTS
COCKEYSVILLE, MARYLAND
July 17 & 18, 1984

Mr. Rick Cole
Genstar Stone Products

G. Sumner Buck, III
President

Sam T. Turner
Team Leader

RECEIVED
AUG 6 1984
ENVIRONMENTAL CONTROL

RAMCON ENVIRONMENTAL CORPORATION

RAMCON BUILDING 223 SCOTT STREET MEMPHIS, TENNESSEE 38112 TELEPHONE 901 / 458-7000 TELEX 53-806

July 31, 1984

Mr. Rick Cole
Genstar Stone Products
11350 McCormick Road
Executive Plaza IV
Hunt Valley, MD 21031

Subject: Particulate Emissions Test - Cockeysville, Maryland Plant

Dear Mr. Cole:

Enclosed are four copies of our report on particulate emissions. Based on our test results, your plant does pass both EPA new source performance standards and those set by the State of Maryland. The average grain loading of the three test runs was in compliance with State and Federal standards.

You will want to sign the report covers and send two copies to:

Mr. Don Andrew
Office of Environmental Programs
P.O. Box 13387
Baltimore, MD 21203

We certainly have enjoyed working with you and hope to serve you again in the future.

Sincerely,

G. Sumner Buck, III
President

GSBIII:kr

Enclosures

TABLE OF CONTENTS

I.	INTRODUCTION	1
II.	TEST RESULTS	1
III.	TEST PROCEDURES	2
IV.	THE SOURCE	4
V.	EQUIPMENT USED	9
VI.	LABORATORY PROCEDURES & RESULTS	10
VII.	CALCULATIONS	17
VIII.	FIELD DATA	26
IX.	CALIBRATION	32
X.	RAMCON PERSONNEL	40

I. INTRODUCTION

On July 17 and 18, 1984, personnel from RAMCON Environmental Corporation (REC) conducted a source emissions test for particulate emissions compliance at Genstar Stone Products' Astec drum mix asphalt plant located in Cockesville, Maryland. RAMCON personnel conducting the test were Sam Turner, Team Leader and Miles Mason. Sam Turner was responsible for the laboratory analysis, including taring the beakers and filters and recording final data in the laboratory record books. Custody of the samples were limited to Mr. Turner and Mr. Mason.

The purpose of the test was to determine if the rate of emissions from the plant's baghouse and the total contaminants by weight (grain loading) are below limits set by the State of Maryland and by the U.S. Environmental Protection Agency.

II. TEST RESULTS

Table I summarizes the test results. The grain loading limitation is specified in 39 FR 9314, March 8, 1974, 60.92 Standards for Particulate Matter (1) as amended. The allowable emissions for the State of Maryland are found in C.O.M.A.R. 101806.03. Ms. Kathy Gunkel observed the testing conducted by RAMCON.

TABLE I

SUMMARY OF TEST RESULTS
July 17 & 18, 1984

Test Run	Time	Grain Loading	Isokinetic Variation	Actual Emissions
1	19:23 to 21:17	0.0193 gr/SCF	94%	3.8 lbs/hr
2	22:04 to 23:31	0.0231 gr/SCF	96%	4.8 lbs/hr
3	17:48 to 19:15	0.0264 gr/SCF	94%	5.6 lbs/hr
Average		0.0229 gr/SCF		4.7 lbs/hr

On the basis of these test results, the average grain loading of the three test runs was below the .04 gr/SCF limit set by EPA and the .03 gr/SCF limit set by the State of Maryland. Therefore, the plant is operating in compliance with State and Federal standards.

III. TEST PROCEDURES

A. Method Used: The source sampling was conducted in accordance with requirements of the U.S. Environmental Protection Agency as set forth in 39 FR 9314, March 8, 1974, 60.93, as amended. All three test runs were sampled at three minutes each.

B. Problems Encountered: No problems were encountered.

C. Sampling Site: The emissions test was conducted after a baghouse on a rectangular stack measuring 29.75" x 44.25" with an equivalent diameter of 35.6". Seven sampling ports were placed 19" down (0.53 diameters upstream) from the top of the stack and 73" up (2.1 diameters downstream) from the last flow disturbance. Twenty eight points were sampled, four through each port for three minutes each.

Points on a Diameter	Probe Mark
1	3.7"
2	11.1"
3	18.5"
4	25.9"

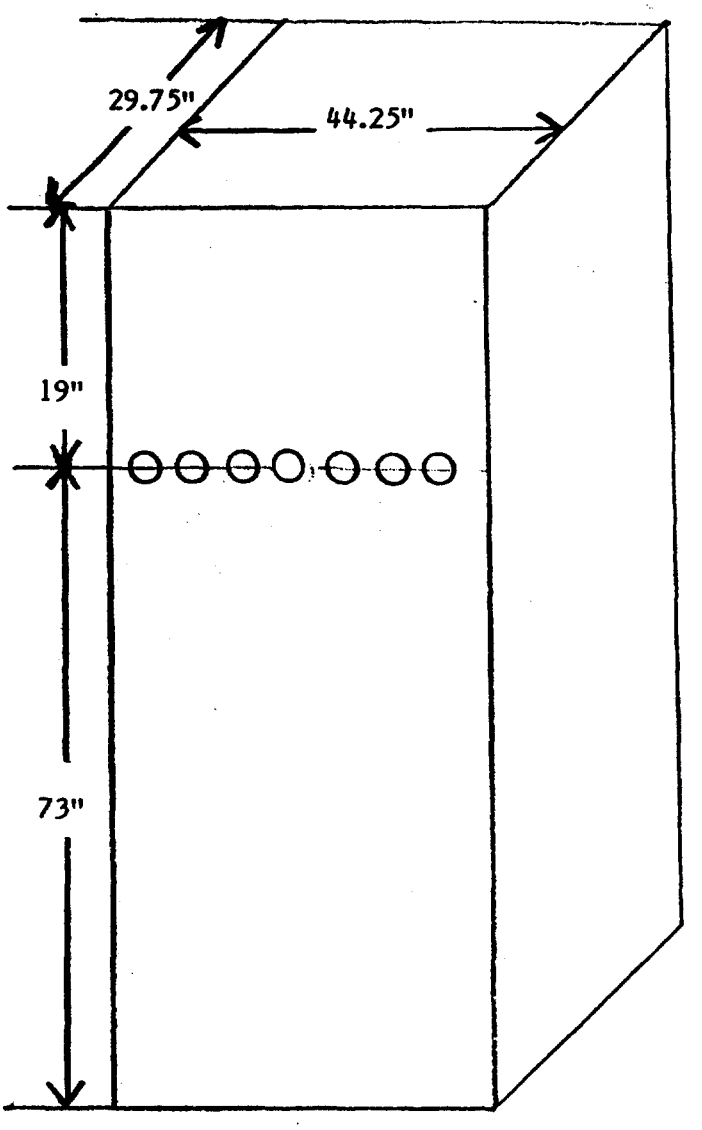

IV. THE SOURCE

IV. THE SOURCE

Genstar Stone Products employs a Astec drum mix asphalt plant which is used to manufacture asphalt concrete for road pavement. The process consists of blending prescribed portions of cold feed materials (sand, gravel, screenings, chips, etc.) uniformly and adding sufficient hot asphalt oil to bind the mixture together. After the hot asphalt mix is manufactured at the plant, it is transported to the location where it is to be applied. The hot asphalt mix is spread evenly over the surface with a paver and then compacted with a heavy roller to produce the final product.

The following is a general description of the plant's manufacturing process: The cold feed materials (aggregate) are dumped into four separate bins which in turn feed a common continuous belt conveyor. The aggregate is dispensed from the bins in accordance with the desired formulation onto the cold feed system conveyor to an inclined weigh conveyor then to a rotating drum for continuous mixing and drying at approximately 300°F. When recycled asphalt mix is used, it is added approximately halfway down the drum through a separate weigh conveyor. The required amount of hot asphalt oil is then injected onto and mixed into the dried aggregate. The now newly formed hot asphalt mix is pulled to the top of a storage silo by a conveyor. The hot asphalt mix is then discharged from the storage silo through a slide gate into waiting dump trucks, which transport the material to a final destination for spreading. The rated capacity of the plant will vary with each aggregate mix and moisture content with a 5% surface moisture removal.

The drum mixer uses a burner to heat air to dry the aggregate, and the motion of the rotating drum to blend the aggregate and hot asphalt oil thoroughly. The air is drawn into the system via an exhaust fan. After passing through the gas burner and the mixing drum, the air passes through a baghouse. The baghouse is manufactured by Astec. The exhaust gasses are drawn through the baghouse and discharged to the atmosphere through the stack. The design pressure drop across the tube sheet is 1 - 4 inches of water. The particulate matter, which is removed by the baghouse is reinjected into the drum mixer.

1. Aggregate bins: Virgin and recycled aggregate is fed individually into each of the bins by type. It is metered onto a conveyor belt running under the bins to a shaker screen. The proportion of each aggregate type is determined by the job mix formula and pre-set to be metered out to meet these specifications.

2. Preliminary oversize screen: The aggregate is fed through a shaker screen where oversize rocks and foreign material is screened out of the mix.

3. Weigh conveyor belt: The aggregate is conveyed to the rotary drum dryer on a conveyor belt which weighs the material. The production rate is determined by this weight reading.

4. Rotary drum dryer/mixer: The aggregate is fed into the rotary drum dryer where it is tumbled by flighting into a veil in front of a gas flame which drives off the moisture. Further mixing is also accomplished in this drum. Hot liquid asphalt is injected approximately one-third of the way down the inclined drum where it is mixed with the aggregate.

5. Burner: The fuel fired burner is used to dry the rough aggregate and sand in the rotating drum as well as reheat recycled asphalt when it is part of the mix.

6. Knock off baffleing: A baffleing plate is inserted in the "dirty" side plenum as a knock out for heavy particles in the air stream. These particles fall to the bottom of the baghouse.

7. Baghouse: The hot gasses are pulled through the bags into the clean air plenum. The solid particulate matter is trapped on the dust coat buildup on the bags. A bag cleaning cycle consisting of jet burst of air from the inside (or clean air side) of the bags sends a large bubble of air down the inside of the bags shaking loose buildup on the bag surface. This particulate matter is collected at the bottom of the baghouse and reinjected into the drum mixer where it is used as part of the finished product.

8. Liquid Asphalt Storage: The liquid asphalt is stored in this heated tank until it is needed in the mixer. The amount of asphalt content and its temperature are pre-set for each different type job.

9. Conveyor to surge/storage bin: The finished product of aggregate mixed with liquid asphalt is conveyed to a surge bin.

10. Surge/storage bin: The asphaltic cement is dumped into this surge bin and metered out to dump trucks which pull underneath slide gate at the bottom of the bin.

11. Control/operators house: The entire plant operation is controlled from this operator's house.

12. Truck loading scale: As the trucks receive the asphalt from the storage/surge bin they are weighed on the loading scale which tells the plant operator the amount of asphalt that is being trucked on each individual load.

13. Stack

1. Aggregate Feed Bins
2. Preliminary Oversize Screen
3. Weigh Conveyor Belt
4. Rotary Drum Dryer/Mixer
5. Burner
6. Knock Out Baffleing
7. Baghouse
8. Liquid Asphalt Storage
9. Conveyor to Surge/Storage Bin(s)
10. Surge/Storage Bin
11. Control/Operators' House
12. Truck Loading Scale
13. Stack

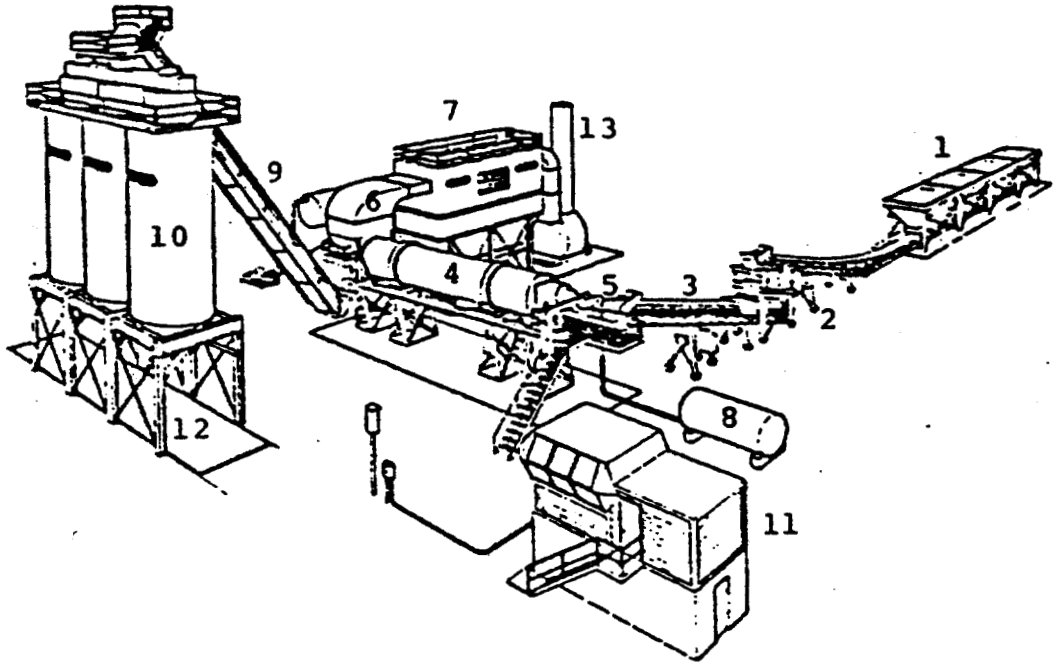

DRUM-MIXER PLANT

DATA SUMMARY

Plant

1. Manufacturer of plant ASTEC.
2. Designed maximum operating capacity 325 TPH @ 5 % moisture.
3. Actual operation rate 250 TPH @ 2.34 % moisture.
4. Startup date 9/1/83.
5. Type of fuel used in dryer Waste Oil.
6. Quanity of fuel consumption 1.56 gpt.

Aggregate

7. Name/type of mix SN - Surface.
8. Percent asphalt in mix 5.8 %.
9. Temperature of asphalt 290°.
10. Sieve/Screening analysis: % Passing;

1"	100	3/8"	98	#16	45	#30 - 32
3/4"	100	#4	67	#50	17	#100 - 10
1/2"		#8	53	#200	5	

Baghouse

11. Manufacturer ASTEC.
12. No. of bags 910. Type of bags Nomex.
13. Air to cloth ratio 6.08 : 1. Designed ACFM 50,000.
14. Square feet of bags 8,333.
15. Type of cleaning; pulse jet ~~✓~~, reverse air ✓, plenum pulse ~~✓~~, other .
16. Cleaning cycle time ~~8 sec~~ 3.5 sec
17. Interval between cleaning cycle 8 sec.
18. Pressure drop across baghouse 7½" psi.
19. Pulse pressure on cleaning cycle 16 psi.

COMPANY NAME Eastal Stone Products DATE 7-17-84

COMPANY REPRESENTATIVE Richard A. Randlo

PLANT DATA

COMPANY NAME Genstar Stone Products Co.
COMPANY REP. Richard A. Rondla DATE 7-17-84 Phone # 628-4083
DATA SOURCE Computer
PLANT LOCATION Texas, Md.
PLANT MANUFACTURER Astec PLANT MODEL NO. Super 6 gal PLANT TYPE Drum mix
MIX SPECIFICATION NO. _____ OIL SPECIFICATION NO. _____

TIME: START _____ STOP _____ A.T. _____ °F R.H. _____ %

TIME 24 HOUR	FUEL OIL ☑ NATURAL GAS ☐ PROPANE ☐	BURNER SETTING	AGGREGATE TPH	RECYCLE TPH	ASPHALT	MIX TEMPERATURE °F	VENTURI ☐ Baghouse ☒ DIFFERENTIAL
Test #1							
8:30 pm	#2	32%	235	0	14.8	290°	7½"
Test #2							
10:00 pm	Waste Oil	35%	260	0	16.2	280°	7½"
10:25 pm	Waste Oil	35%	260	0	16.2	280°	7½"
11:00 pm	Waste Oil	35%	255	0	16.5	275°	8½"
Test #3 7/18/84							
8:00	Waste Oil	39%	252	0	14.7	280	7½"
8:25	Waste Oil	39%	237	0	14.9	280	8.0"
9:00	Waste Oil	36%	251	0	14.8	275	7½"

REMARKS:

V. EQUIPMENT USED

V. EQUIPMENT USED

Equipment used on conducting the particulate emissions test was:

A. The Lear Siegler PM-100 stack sampler with appropriate auxillary equipment and glassware. The train was set up according to the schematic on the next page.

B. A Fisher Scientific 211-B airguide (uncorrected) aneroid barometer was used to check the barometric pressure.

C. Weston dial thermometers were used to check both stack and meter temperatures.

D. A Hays 621 Analyzer was used to measure the oxygen, carbon dioxide and carbon monoxide content of the stack gases.

VI. LABORATORY PROCEDURES & RESULTS

LABORATORY PROCEDURES FOR PARTICULATE SAMPLING

I. Field Preparation

A. FILTERS: Fiberglass 4" sampling filters are prepared as follows:

Filters are removed from their box and numbered on the back side with a felt pen. The numbering system is continuous from job to job. The filters are placed in a dessicator to dry for at least 24 hours. Clean plastic petri dishes, also numbered, top and bottom, are placed in the dessicator with the filters. After dessication, the filters are removed one at a time and weighed on the Sartorius analytical balance, then placed in the correspondingly numbered petri dish. Weights are then recorded in the lab record book. Three filters are used for each complete particulate source emissions test and there should be several extra filters included as spares.

B. SILICA GEL: Silica Gel used for the test is prepared as follows:

Approximately 200 g of silica gel is placed in a wide mouth "Mason" type jar and dried in an oven (175°C for two hours). The open jars are removed and placed in a dessicator until cool (2 hours) and then tightly sealed. The jars are then numbered and weighed on the triple beam balance to the closest tenth of a gram, and this weight is recorded for each sealed jar. The number of silica gel jars used is the same as the number of filters. Silica gel should be indicating type, 6-16 mesh.

II. Post-Testing Lab Analysis

A. FILTERS: The filters are returned to the lab in their sealed glass filter holder which was used in field sampling. In the lab these holders are opened. The filter is placed in its petri dish with the lid off and returned to the dessicator for at least 24 hours. The top half of the filter holder is washed into the corresponding probe wash bottle and the bottom half of the filter holder is washed into the corresponding impinger catch bottle. (See II, C and D). After dessication, the filters are reweighed. The final weight is recorded in the lab record book. The filter pick up weight is calculated and recorded also. This procedure is repeated for all filters used in the field.

Alternately, the test team may opt to oven dry the filters at 220°F for two to three hours, weigh the sample, and use this weight as a final weight.

B. SILICA GEL: The sealed silica gel jars should be reweighed on the triple-beam balance and their weights recorded as shown on previous page.

C. PROBE RINSINGS: In all tests, a probe wash-out analysis will be necessary. These samples are returned in sealed Mason jars and consist of A.R. Acetone with an unknown solid content. Clean 250 ml beakers are used to make this analysis. These should be immaculately washed and rinsed with deionized water, then oven dried at 105°C for about one hour. The beakers should be moved to the dessicator to cool for ninety (90) minutes, then labeled with a pencil and weighed on the Sartorius analytical balance. Any variance from this procedure should be duplicated exactly when reweighing, as this procedure has been found to be quite sensitive. After preparing the necessary number of beakers (one for each probe wash and one blank) the Mason jars should be opened, poured into the beaker, and any material remaining on the jar walls rinsed with an acetone wash bottle into the beaker. The amount of liquid in the beaker should be noted on the analysis form. The acetone rinsings are evaporated on a warming plate. The liquid is kept swirled with an air sweep to prevent "bumping". When the acetone is evaporated the beakers are weighed as in Section II A.

D. IMPINGER CATCH: In some testing cases, the liquid collected in the impingers must be analyzed for solids content. This involves a similar procedure to the probe wash solids determination, except that the liquid is deionized water.

E. ACETONE: Conduct a blank analysis of acetone in the 1 gallon glass container. This acetone will be used in the field for rinsing the probe, nozzle, and top half of the filter holder. Performing such a blank analysis prior to testing will insure that the quality of the acetone to be used will not exceed the .001% residual purity standard.

SPECIAL NOTE

When sampling sources high in moisture content, (such as asphalt plants) the filter paper sometimes sticks to the filter holder. When removing the filter it may tear. In order to maintain control of any small pieces of filter paper which may be easily lost, they are washed with acetone into the probe washing. This makes the filter weight light (sometimes negative) and the probe wash correspondingly heavier. The net weight is the same and no particulate is lost. This laboratory procedure is taught by EPA in the Quality Assurance for Source Emissions Workshop at Research Triangle Park and is approved by EPA.

WEIGHING PROCEDURE — SARTORIUS ANALYTICAL BALANCE

The Sartorius balance is accurate to approximately +0.2 mg and has a maximum capacity of 200 g. It is equipped with "pre-weighing" which enables an unknown mass to be quickly weighed to a +1 g level with no adjustment. It also has a tare weighing feature which is for quick net gain measurement without subtraction. Before weighing an item, the balance should first be zeroed. This step should be taken before every series of weighings. To do this, the balance should have all weight adjustments at "zero" position. The beam arrest lever (on the lower left hand side toward the rear of the balance) is then slowly pressed downward to full release position. The lighted vernier scale on the front of the cabinet should align the "zero" with the mark on the cabinet. If it is not so aligned, the adjustment knob on the right hand side (near the rear of the cabinet) should be turned carefully until the marks align. Now return the beam arrest to horizontal arrest position. The balance is now "zeroed".

To weigh an item, it is first placed on the pan. And the sliding doors are closed to avoid air current disturbance. The weight adjustment knob on the right hand side must be at "zero". The beam arrest is then slowly turned upward. The lighted scale at the front of the cabinet will now indicate the weight of the item in grams. If the scale goes past the divided area, the item then exceeds 100 g weight (about 3-1/2 ounces) and it is necessary to arrest the balance (beam arrest lever) and move the lever for 100 g weight away from you. It is located on the left hand side of the cabinet near the front, and is the knob closest to the side of the cabinet. The balance is now set to weigh items between 100 and 200 grams. The balance will not weigh items greater than 200 grams in mass, and trying to do this might harm the balance. Remember — this is a delicate precision instrument.

After the beam is arrested, in either weight range, the procedure is now the same. When the weight of the item in grams is found, "dial in" that amount with the two knobs on the left hand side (near the 100 g lever) color coded yellow and green. As you dial the weight, the digits will appear on the front of the cabinet. When the proper amount is dialed, carefully move the arrest lever down with a slow, steady turn of the wrist. The lighted dial will appear, and the right hand side knob (front of cabinet) is turned to align the mark with the lower of the two lighted scale divisions which the mark appears between. When these marks are aligned, the two lighted digits along with the two indicated on the right hand window on the cabinet front are the fractional weight in grams (the decimal would appear before the lighted digits) and the whole number of grams weight is the amount "dialed in" on the left.

In general, be sure that the beam is in "arrest" position before placing weight on or taking weight off of the pan. Don't "dial in" weight unless the beam is arrested, either. The balance is sensitive to even a hand on the table near the balance, so be careful and painstaking in every movement while weighing.

SAMPLE ANALYTICAL DATA FORM

Plant Location Baltimore Md. (Genstar)

Sample Location Asphalt plant stack

Relative humidity in lab 50%

Density of acetone (ρ_a) .7899 g/ml

		RUN 1	RUN 2	RUN 3
Acetone rinse container number	#			
Acetone rinse volume (V_{aw})	ml	200	200	190
Acetone blank residue concentration (C_a)	mg/g	0	0	0
$W_a = C_a V_{aw} \rho_a$ = (0) 200) (.7899) =	g	0	0	0
Date/time of wt 7-30-84 11:00 am Gross wt	g	149.4726	100.6088	155.7071
Date/time of wt 7-30-84 1 pm Gross wt	g	149.4726	100.6088	155.7071
Average Gross wt	g	149.4726	100.6088	155.7071
Tare wt	g	149.4090	100.5412	155.6298
Less acetone blank wt (W_a)	g	0	0	0
Wt of particulate in acetone rinse (m_a)	g	.0636	.0676	.0773
Filter numbers	#	RV 54	RV 55	RV 58
Date/time of wt 7-30-84 11 am Gross wt	g	.6892	.7082	.7091
Date/time of wt 7-30-84 1 pm Gross wt	g	.6892	.7082	.7091
Average Gross wt	g	.6892	.7082	.7091
Tare wt	g	.6807	.6819	.6801
Weight of particulate on filters(s) (m_f)	g	.0085	.0263	.0290
Weight of particulate in acetone rinse	g	.0636	.0676	.0773
Total weight of particulate (m_n)	g	.0721	.0939	0.1063

Note: In no case should a blank residue 0.01 mg/g or 0.001% of the weight of acetone used be subtracted from the sample weight.

Remarks

Signature of analyst Sam O. T. Turner

Signature of reviewer E. Burt

COMPANY NAME GENSTAR

Chloroform and Ethyl Ether Extraction for EPA Method 5 (back half)

Relative humidity in lab 45%

Density of chloroform and ethyl ether _____

			RUN 1	RUN 2	RUN 3
Chloroform and ethyl ether rinse volume		ml	150	150	150
Date/time of wt 7-30-84 9:45	Gross wt.	g	140.9577	146.1607	147.1182
Date/time of wt 7-30-84 3:30	Gross wt.	g	140.9577	146.1611	147.1176
Avg.	Gross wt.	g	140.9577	146.1609	147.1179
	Tare wt.	g	140.9369	146.1114	147.0961
Wt. of particulate in chloroform ethyl ether rinse		g	.0208	.0195	.0218
Water evaporation		#	4	5	6
Date/time of wt. 7-30-84 9:45	Gross wt.	g	150.2576	136.8844	134.4840
Date/time of wt. 7-30-84 3:30	Gross wt.	g	150.2570	136.8844	134.4830
Avg.	Gross wt.	g	150.2573	136.8844	134.4835
	Tare wt.	g	150.2136	136.8373	134.4338
Less chloroform & ehtyl either blank wt.		g	0	0	0
Weight of particulate from water (m_f)		g	.0437 .0214	.0471 .0274	.0497 .0630
Wt. of particulate in chloroform ethyl ether rinse		g	.0208	.0195	.0218
Total weight of particulate (m_n)		g	.0859	.0940	.1345

Note: In no case should a blank residue 0.02 mg/g or 0.001% of the weight of chloroform ethyl ether used be subtracted from the sample weight.

Remarks Two beakers were needed for each analysis

Signature of Analyst S T Turner

Signature of Reviewer [illegible]

GenStar

Chloroform and Ethyl Ether Extraction for EPA Method 5 (back half)

Relative humidity in Lab _____
Density of chloroform and ethyl ether _____

Page 2

		RUN 1	RUN 2	RUN 3
Chloroform and ethyl ether rinse volume	ml			
Date/time of wt _____ Gross wt.	g			
Date/time of wt _____ Gross wt.	g			
Avg. Gross wt.	g			
Less chloroform ethyl ether blank et.	g			
Wt. of particulate in chloroform ethyl ether rinse	g			
Water evaporation	#	4A	5A	6A
Date/time of wt. 7-30-84 1:45 pm Gross wt.	g	157.1212	146.8923	159.0330
Date/time of wt. 7-30-84 330 pm Gross wt.	g	157.1212	146.8923	159.0330
Avg. Gross wt.	g	157.1212	146.8923	159.0330
Tare wt.	g	157.0998	146.8649	158.9700
Weight of particulate from water (m_f)	g	.0214	.0274	.0630
Weight of particulate in chloroform ethyl ether rinse	g			
Total weight of particulate (m_n)	g			

Note: In no case should a blank residue 0.01 mg/g or 0.001% of the weight of chloroform ethyl ether used be subtracted from the sample weight.

Remarks This is the second beaker

Signature of Analyst Sam Turner

Signature of Reviewer S. Bush

VII. CALCULATIONS

NAME: GENSTAR STONE PRODUCTS

LOCATION: COCKEYSVILLE, MARYLAND

		date	7/17/84	7/17/84	7/18/84
	SUMMARY OF TEST DATA		RUN # 1	RUN # 2	RUN # 3
	SAMPLING TRAIN DATA	start	19:23	22:04	17:48
		finish	21:17	23:31	19:15
1	Sampling time, minutes	θ	84	84	84
2	Sampling nozzle diameter, in.	Dn	.230	.230	.230
3	Sampling nozzle cross-sectional area, ft^2	An	.000289	.000289	.000289
4	Isokinetit variation	I	94	97	95
5	Sample gas volume - meter conditions, cf.	Vm	62.04	67.72	66.48
6	Average meter temperature, °R	Tm	555	558	551
7	Average oriface pressure drop, in.H_2O	ΔH	1.18	1.40	1.41
8	Total particulate collected mg.	Mn	72.1	93.9	106.3
	VELOCITY TRAVERSE DATA				
9	Stack area, ft^2.	A	9.1	9.1	9.1
10	Absolute stack gas pressure, in Hg.	Ps	29.10	29.10	29.02
11	Barometric pressure, in. Hg.	Pbar	29.08	29.08	29.00
12	Average absolute stack temperature, °R	Ts	736	742	749
13	Average $\sqrt{\text{velocity head}}$, (Cp= .81)	$\sqrt{\Delta P}$	1.13	1.22	1.23
14	Average stack gas velocity ft./ sec.	Vs	75	81	82
	STACK MOISTURE CONTENT				
15	Total water collected by train, ml.	Vic	294.0	358.0	335.0
16	Moisture in stack gas, %	Bws	19.5	21.2	20.3
	EMISSIONS DATA:				
17	Stack gas flow rate, dscf/hr. (000's)	Qsd	1,383	1,461	1,478
18	Total particulate concentration, gr/dscf	Cs	.0193	.0231	.0264
19	Total particulate concentration, lbs/hr	E	3.8	4.8	5.6
20	Total particulate concentration, lbs/mbtu	E'	.0	.0	.0
	ORSAT DATA				
21	Percent CO2 by volume	CO2	10.0	10.0	10.0
22	Percent O2 by volume	O2	11.0	11.0	11.0
23	Percent CO by volume	CO	.0	.0	.0
24	Percent N2 by volume	N2	79.0	79.0	79.0

Buzzycalc

Total contamints by weight: 'GRAIN LOADING'

Particulate concentration C_s' gr./dscf.

$$C_s' = \left[0.0154 \frac{gr}{mg} \right] \left[\frac{M_n}{V_{m(std)}} \right]$$

Where:

C_s' = concentration of particulate mater in stack gas, dry basis, corrected to standard conditions, g/dsf

M_n = Total amount of particulate mater colected, mg.

$V_{m(std)}$ = dry gas volume through meter at standard conditions, cu.ft.

Run # 1: $$C_s' = \left[0.0154 \frac{gr}{mg} \right] \left[\frac{72.1}{57.51} \right] = .0193 \text{ gr./dscf.}$$

Run # 2: $$C_s' = \left[0.0154 \frac{gr}{mg} \right] \left[\frac{93.9}{62.48} \right] = .0231 \text{ gr./dscf.}$$

Run # 3: $$C_s' = \left[0.0154 \frac{gr}{mg} \right] \left[\frac{106.3}{61.94} \right] = .0264 \text{ gr./dscf.}$$

Dry molecular weight:

$$M_d = 0.44(\%CO_2) + 0.32(\%O_2) + 0.28(\%CO + \%N_2).$$

Where:

M_d	= Dry molecular weight, lb./lb.-mole.
$\%CO_2$	= Percent carbon dioxide by volume (dry basis).
$\%O_2$	= Percent oxygen by volume (dry basis).
$\%N_2$	= Percent nitrogen by volume (dry basis).
%CO	= Percent carbon monoxide by volume (dry basis).
0.264	= Ratio of O_2 to N_2 in air, v/v.
0.28	= Molecular weight of N_2 or CO, divided by 100.
0.32	= molecular weight of O_2 divided by 100.
0.44	= molecular weight of CO_2 divided by 100.

Run # 1: $M_d = 0.44(10.0\%) + 0.32(11.0\%) + 0.28(.0\% + 79.0\%) = 30.0$ lb./lb.-mole

Run # 2: $M_d = 0.44(10.0\%) + 0.32(11.0\%) + 0.28(.0\% + 79.0\%) = 30.0$ lb./lb.-mole

Run # 3: $M_d = 0.44(10.0\%) + 0.32(11.0\%) + 0.28(.0\% + 79.0\%) = 30.0$ lb./lb.-mole

Water vapor condenced :

$$V_{wc_{std}} = \left[V_f - V_i \right] \left[\frac{P_w \; R \; T_{(std)}}{M_w \quad P_{(std)}} \right] = 0.04707 \left[V_f - V_i \right]$$

$$V_{wsg_{std}} = \left[W_f - W_i \right] \left[\frac{R \quad T_{(std)}}{M_w \quad P_{(std)}} \right] = 0.04715 \left[W_f - W_i \right]$$

Where:

0.04707 = Conversion factor ft^3/ml.

0.04715 = Conversion factor ft^3/g.

$V_{wc_{std}}$ = Volume of water vapor condenced (standard conditions) scf.

$V_{wsg_{std}}$ = Volume of water vapor collected in silica gel (stadard conditions)

V_f = Final volume of impinger contents, ml.

V_i = Initial volume of impinger contents

P = Density of water, (0.002201 lb/ml).

R = Ideal gas constant, 21.85 (in.Hg.)(cu.ft./lb.-mole)(°R)

M_w = Molecular weight of water vapor (18.0 lb/lb-mole).

T_{std} = Absolute temperature at standard conditions, 528°R.

P_{std} = Absolute pressure at standard conditions, 29.92 inches Hg.

Run # 1: $V_{wc(std)}$ = (0.04707) (280.0) = 13.2 cu.ft
$V_{wsg(std)}$ = (0.04715) (14.0) = .7 cu.ft

Run # 2: $V_{wc(std)}$ = (0.04707) (345.0) = 16.2 cu.ft
$V_{wsg(std)}$ = (0.04715) (13.0) = .6 cu.ft

Run # 3: $V_{wsg(std)}$ = (0.04707) (320.0) = 15.1 cu.ft
$V_{wc(std)}$ = (0.04715) (15.0) = .7 cu.ft

Moisture content of stack gases: $$B_{ws} = \frac{V_{wc_{std}} + V_{wsg_{std}}}{V_{wc_{std}} + V_{wsg_{std}} + V_{m_{std}}} \times 100$$

Where:

B_{ws} = Proportion of water vapor, by volume, in the gas ream.

V_m = Dry gas volume measured by dry gas meter,(dcf).

$V_{wc_{std}}$ = Volume of water vapor condenced corrected to stanndard conditions (scf).

$V_{wsg_{std}}$ = Volume of water vapor collected in silica gel corcted to standard conditions (scf).

Run # 1: $$B_{ws} = \frac{13.2 + .7}{13.2 + .7 + 57.51} \times 100 = 19.5\ \%$$

Run # 2: $$B_{ws} = \frac{16.2 + .6}{16.2 + .6 + 62.48} \times 100 = 21.2\ \%$$

Run # 3: $$B_{ws} = \frac{15.1 + .7}{15.1 + .7 + 61.94} \times 100 = 20.3\ \%$$

Molecular weight of stack gases: $M_s = M_d\ (1-B_{ws}) + (B_{ws})$.

Where:

M_s = Molecular weight of stack gas, wet basis, (lb.1le).

M_d = Molecular weight of stack gas, dry basis, (lb./b.-mole).

Run # 1: M_s = 30.0 (1- .195) + 18 (.195) = 27.7 (lb./lb.-mole).

Run # 2: M_s = 30.0 (1- .212) + 18 (.212) = 27.5 (lb./lb.-mole).

Run # 3: M_s = 30.0 (1- .203) + 18 (.203) = 27.6 (lb./lb.-mole).

Stack gas velocity:

$$V_s = K_p\ C_p \left[\sqrt{\Delta P} \right]_{avg.} \sqrt{\frac{T_{s(avg.)}}{P_s\ M_s}}$$

Where:

V_s = Avarage velocity of gas stream in stack, ft./sec.

K_p = 85.49 ft/sec $\left[(g/g\text{-}mole)\text{-}(mm\ Hg)\ /\ (^{\circ}K)(\ mm\ H_2O) \right]^{1/2}$

C_p = Pitot tube coefficient,(dimensionless).

ΔP = Velocity head of stack gas, in. H_2O.

P_{bar} = Barometric pressure at measurement site, (in.Hg.

P_g = Satck static pressure (in.Hg).

P_s = Absolute stack gas pressure, (in.Hg) = $P_{bar} + P_g$

P_{std} = Standard absolute pressure, (29.92 in.Hg).

t_s = Stack temperature, ($^{\circ}$f).

T_s = Absolute stack temperature, ($^{\circ}$R). = 460 + t_s.

M_s = Molecular weight of stack gas, wet basis, (lb/lb-mole).

Run # 1: $V = (85.48)\ (\ .81)\ (\ 1.13) \sqrt{\frac{736}{(29.10)(27.66)}} = 74.82$ ft/sec

Run # 2: $V = (85.48)\ (\ .81)\ (\ 1.22) \sqrt{\frac{742}{(29.10)(27.46)}} = 81.40$ ft/sec

Run # 3: $V = (85.48)\ (\ .81)\ (\ 1.23) \sqrt{\frac{749}{(29.02)(27.56)}} = 82.42$ ft/sec

Stack gas flow rate:

$$Q_{sd} = 3600 \left[1-B_{wc} \right] V_s A \left[\frac{T_{std}}{T_{stk}} \right] \left[\frac{P_s}{P_{std}} \right]$$

Where:

Q_{sd}	=	Dry volumetric stack gas flow rate corrected to standard conditions, (dscf/hr).
A	=	Cross sectional area of stack $(ft.)^2$.
3600	=	Conversion factor, sec./hr.
t_s	=	Stack temperature (°f).
T_s	=	Absolute stack temperature, (°R).
T_{std}	=	Standard absolute temperature, (528°R).
P_{bar}	=	Barometric pressure at measurement site, (in.Hg.).
P_g	=	Satck static pressure, (in.Hg.).
P_s	=	Absolute stack gas pressure, (in.Hg.); = $P_{bar} + P_g$
P_{std}	=	Standard absolute pressure, (29.92 in.Hg).

Run # 1:

$$Q_{sd} = 3600\ (1-.195)\ (\ 74.82)\ (\ \ 9.1) \left[\frac{528}{736} \right] \left[\frac{29.10}{29.92} \right] = 1382769 \text{ dscf/h}$$

Run # 2:

$$Q_{sd} = 3600\ (1-.212)\ (\ 81.40)\ (\ \ 9.1) \left[\frac{528}{742} \right] \left[\frac{29.10}{29.92} \right] = 1460699 \text{ dscf/h}$$

Run # 3:

$$Q_{sd} = 3600\ (1-.203)\ (\ 82.42)\ (\ \ 9.1) \left[\frac{528}{749} \right] \left[\frac{29.02}{29.92} \right] = 1477840 \text{ dscf/h}$$

Emissions rate from stack:

$$E = \frac{(C_s)(Q_{sd})}{7000 \text{ gr./lb.}} = \text{lb. / hr.}$$

Where:

E = Emissions rate, lb./hr.

C = concentration of particulate mater in stack gas, dry basis, corrected to standard conditions (g/dsf).

Q = Dry volumetric stack gas flow rate corrected to standard conditions, (dscf/hr).

Run # 1: $E = \frac{(.0193)(1382769)}{7000} = 3.8$ lb. / hr.

Run # 2: $E = \frac{(.0231)(1460699)}{7000} = 4.8$ lb. / hr.

Run # 3: $E = \frac{(.0264)(1477840)}{7000} = 5.6$ lb. / hr.

$$\text{Isokinetic variation : } I = 100\ T_s \left[\frac{0.002669\ V_{ic} + (V_m/T_m)(P_{bar} + \Delta H/13.6)}{60\ \ \theta\ \ V_s\ \ P_s\ \ A_n} \right]$$

Where:

I	=	Precent isokinetic sampling.
100	=	conversion to percent.
T_s	=	Absolute average stack gas temperature, °R.
0.002669	=	conversion factor, Hg - ft^3/ml - °R.
V_{ic}	=	Total volume of liquid collected in impingers and silica gel, ml
T_m	=	Absolute average dry gas meter temperature, °R.
P_{bar}	=	Barometric pressure at sampling site, (inHg).
ΔH	=	Average pressure differential across the oriface meter, (in.H_2O)
13.6	=	Specific gravity of mercury.
60	=	conversion seconds to minutes
θ	=	Total sampling time, minutes.
V_s	=	Stack gas velocity, ft./sec.
P_s	=	Absolute stack gas pressure, in.Hg.
A_n	=	Cross sectional area of nozzle, ft^2.

Run # 1:

$$I = 100 \times 736 \left[\frac{(0.002669)(294.0) + \frac{62.0}{555}\left[29.08 + \frac{1.18}{13.6}\right]}{60\ (84)\ (74.82)\ (29.10)\ (.000289)} \right] = 94\ \%$$

Run # 2:

$$I = 100 \times 742 \left[\frac{(0.002669)(358.0) + \frac{67.7}{558}\left[29.08 + \frac{1.40}{13.6}\right]}{60\ (84)\ (81.40)\ (29.10)\ (.000289)} \right] = 97\ \%$$

Run # 3:

$$I = 100 \times 749 \left[\frac{(0.002669)(335.0) + \frac{66.5}{551}\left[29.00 + \frac{1.41}{13.6}\right]}{60\ (84)\ (82.42)\ (29.02)\ (.000289)} \right] = 95\ \%$$

VIII. FIELD DATA

PP 1.95

RAMCON ENVIRONMENTAL CORPORATION

Plant: GENSTAR

Location: Cockeysville Md.
Operator: Sam T. Tirone A
Date: 7-17-84
Run No.: ONE
Sample Box No.: ONE
Meter Box No.: 700205
Meter H @: 1.26
C Factor: 1.00
Pitot Tube Coefficient Cp: .81

upstream 1.9 .53 ø downstream 2.1 ø

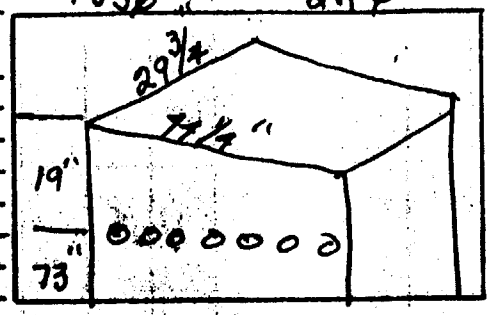

Schematic of Stack Cross Section

Ambient Temperature: 80
Barometric Pressure: 29.08
Assumed Moisture, %: 25
Probe Length, m(ft): 3'
Nozzle Identification No.: .000288.5
Avg. Calibrated Nozzle Dia., (in.): .23/.23/.23
Probe Heater Setting: 5
Leak Rate, m³/min. (cfm): -.02
Probe Liner Material: Stainless Steel
Static Pressure, mm Hg (in. Hg): +.02
Filter No.: RV 54

	IMPINGER VOLUME, ml	SILICA GEL WEIGHT, g
FINAL	480	514
INITIAL	200	500
DIFFERENCE	280	14

TRAV. PT NO.	SAMPLING TIME (θ) min.	VACUUM (in. Hg)	STACK TEMP (T_s) (°F)	VELOCITY HEAD (P_s) (in) H_2O	PRESSURE DIFF. ORF. MTR (in H_2O)	GAS SAMPLE VOLUME (ft^3)	GAS SAMPLE TEMP. AT DRY GAS METER (°F) Inlet	Outlet	FILTER HOLDER TEMP (°F)	GAS TEMP LVG CONDENSER OR LAST IMPINGER (°F)
A) 1	19:23 / 19:26	5	260	1.1	1.0	693.925 / 696.10	85	85	250	60
2	19:29	5	270	1.3	1.2	698.40	100	85	250	55
3	19:32	5	270	1.3	1.2	700.30	100	85	250	55
4	19:35	6	270	1.3	1.2	702.58	100	85	250	55
B) 1	19:36 / 19:39	4	270	.95	9.0	704.50	105	85	250	55
2	19:42	5	280	1.1	1.0	706.80	105	85	260	55
3	19:45	5	280	1.1	1.0	708.50	110	85	260	55
4	19:48	5	280	1.1	1.0	710.56	110	85	260	55
C) 1	19:48:30 / 19:51	4	275	1.1	1.0	712.60	110	85	260	55
2	19:54	5	275	1.1	1.0	713.40	110	85	260	55
3	20:20:30 / 18:23	5	265	1.3	1.2	716.60	100	85	260	55
4	20:26:30	5	270	1.2	1.1	718.80	105	85	255	55
D) 1	20:27 / 20:30	5	275	1.2	1.1	721.10	105	85	255	55

RAMCON emissions test log sheet, cont. DATE 7-17-84 LOCATION Baltimore md TEST NO. 1

TRAVERSE POINT	SAMPLING TIME θ (min)	VACUUM mm Hg (in. Hg)	STACK TEMP T_s (°F)	VELOCITY HEAD ΔP_s (in. H_2O)	ORFICE DIFF. PRESSURE ΔH (in. H_2O)	GAS VOLUME Vm ($ft.^3$)	GAS SAMPLE TEMP. (°F) in	GAS SAMPLE TEMP. (°F) out	SAMPLE BOX TEMP. (°F)	IMPINGER TEMP (°F)
2	20:33	6	275	1.2	1.1	723.20	105	85	250	55
3	20:36	6	275	1.3	1.2	725.40	105	85	250	55
4	20:39	6	275	1.3	1.2	727.70	105	85	250	55
E) 1	20:40 / 20:43	6	280	1.3	1.2	729.90	105	85	250	55
2	20:46	6	280	1.3	1.2	732.20	105	85	250	55
3	20:49	5	280	1.2	1.1	734.30	105	85	265	55
4	20:52	6	280	1.2	1.1	736.55	105	85	265	55
F) 1	20:52:30 / 20:55:30	7	280	1.7	1.6	738.99	105	85	265	55
2	20:58:30	7	280	1.5	1.4	741.10	105	85	265	55
3	21:01:30	6	280	1.3	1.2	744.00	105	85	265	55
4	21:04:30	6	280	1.3	1.2	746.19	105	85	265	55
G) 1	21:05 / 21:08	7	275	1.5	1.4	748.80	105	85	265	55
2	21:11	7	280	1.5	1.4	751.00	105	85	265	55
3	21:14	7	280	1.5	1.4	753.45	105	85	265	55
4	21:17	7	280	1.5	1.4	755.966	105	85	265	55

RAMCON ENVIRONMENTAL CORPORATION

Plant: Genstar
Location: Cockeysville Md
Operator: Sam Clemens
Date: 7-17-84
Run No.: Two
Sample Box No.: Two
Meter Box No.: 700205
Meter H @: 1.26
C Factor: 1.0
Pitot Tube Coefficient Cp: .81

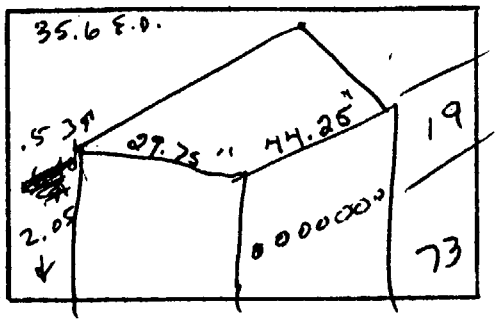

			IMPINGER VOLUME, ml	SILICA GEL WEIGHT, g
Ambient Temperature	80			
Barometric Pressure	29.08	FINAL	545	525
Assumed Moisture, %	25	INITIAL	200	512
Probe Length, m(ft)	3'	DIFFERENCE	345	13

Nozzle Identification No.: 1000 2885
Avg. Calibrated Nozzle Dia., (in.): .23/.23/.23
Probe Heater Setting: 5
Leak Rate, m^3/min. (cfm): -.01
Probe Liner Material: Stainless Steel
Static Pressure, mm Hg (in. Hg): +.02
Filter No.: RU-55

Schematic of Stack Cross Section

TRAV. PT NO.	SAMPLING TIME (θ) min.	VACUUM (in. Hg)	STACK TEMP (T_s) (°F)	VELOCITY HEAD (P_s) (in) H_2O	PRESSURE DIFF. ORF. MTR (in H_2O)	GAS SAMPLE VOLUME (ft^3)	GAS SAMPLE TEMP. AT DRY GAS METER (°F) Inlet	Outlet	FILTER HOLDER TEMP (°F)	GAS TEMP LVG CONDENSER OR LAST IMPINGER (°F)
A) 1	22:04 / 22:07	7	280	2.1	2.0	756.32 / 759.40	90	85	250	50
2	22:10	7	280	2.1	2.0	762.10	105	85	250	50
3	22:13	7	280	2.1	2.0	764.50	105	85	250	50
4	22:16	7	280	1.5	1.4	767.19	105	85	250	50
B) 1	22:16:30 / 22:19	6	280	1.9	1.8	769.90	110	85	250	50
2	22:22	6	280	1.7	1.6	772.70	110	85	250	50
3	22:25:30	6	280	1.6	1.5	775.00	110	85	250	50
4	22:28:30	5	285	1.3	1.2	777.30	110	85	250	50
C) 1	22:29 / 22:32	5	280	1.6	1.5	779.80	110	90	250	50
2	22:35	6	280	1.6	1.5	782.10	110	90	250	50
3	22:38	5	280	1.3	1.2	784.40	110	90	250	50
4	22:41	5	280	1.3	1.2	786.90	110	90	250	50
D) 1	22:41:30 / 22:44:30	5	280	1.3	1.2	789.20	110	90	250	50

RAMCON emissions test log sheet, cont. DATE 7-17-84 LOCATION Baltimore mt TEST NO. 2

TRAVERSE POINT	SAMPLING TIME θ (min)	VACUUM mm Hg (in. Hg)	STACK TEMP T_s (°F)	VELOCITY HEAD ΔP_s (in. H_2O)	ORFICE DIFF. PRESSURE ΔH (in. H_2O)	GAS VOLUME Vm ($ft.^3$)	GAS SAMPLE TEMP. (°F) in	GAS SAMPLE TEMP. (°F) out	SAMPLE BOX TEMP. (°F)	IMPINGER TEMP (°F)
2	22:47:30	5	280	1.4	1.3	791.50	110	90	240	50
3	22:50:30	5	280	1.5	1.4	793.80	110	90	240	50
4	22:53:30	5	280	1.5	1.4	796.33	110	90	240	50
E) 1	22:54 / 22:57	5	280	1.3	1.2	798.60	110	90	240	50
2	23:00	5	285	1.3	1.2	800.90	110	85	245	50
3	23:03	5	285	1.3	1.2	803.10	110	85	255	50
4	23:06	5	280	1.3	1.2	806.00	110	85	260	50
F) 1	23:06:30 / 23:09:30	5	280	1.3	1.2	807.90	110	85	265	50
2	23:12:30	5	285	1.3	1.2	810.10	110	85	265	50
3	23:15:30	5	285	1.3	1.2	812.80	110	85	265	50
4	23:18:30	5	285	1.3	1.2	814.51	110	85	265	50
G) 1	23:19 / 23:22	5	280	1.2	1.1	816.60	110	85	265	50
2	23:25	6	280	1.4	1.3	818.90	110	85	265	50
3	23:28	6	290	1.6	1.5	821.40	110	85	265	50
4	23:31	6	290	1.5	1.4	824.04	110	85	265	95

RAMCON ENVIRONMENTAL CORPORATION

Plant GENSTAR

Location COCKEYSVILLE, MD.
Operator MILES MASON
Date 7-18-84
Run No. THREE
Sample Box No. THREE
Meter Box No. 700205
Meter H @ 1.26
C Factor 1.00
Pitot Tube Coefficient Cp .81

PP. 1.95

Ambient Temperature 80
Barometric Pressure 29.00
Assumed Moisture, % 25
Probe Length, m(ft) 3'
Nozzle Identification No. .0002885
Avg. Calibrated Nozzle Dia., (in.) .23/.23/.23
Probe Heater Setting 5
Leak Rate, m³/min. (cfm) ~.02
Probe Liner Material STAINLESS STEEL
Static Pressure, mm Hg (in.Hg)
Filter No. RV58

	IMPINGER VOLUME, ml	SILICA GEL WEIGHT, g
FINAL	520	516
INITIAL	200	501
DIFFERENCE	320	15

Schematic of Stack Cross Section

TRAV. PT NO.	SAMPLING TIME (θ)min.	VACUUM mm Hg (in. Hg)	STACK TEMP (Ts) °C (°F)	VELOCITY HEAD (Ps) mm(in)H20	PRESSURE DIFF. ORF. MTR mm H20 (in H20)	GAS SAMPLE VOLUME m³ (ft³)	GAS SAMPLE TEMP. AT DRY GAS METER °C (°F) Inlet	Outlet	FILTER HOLDER TEMP °C (°F)	GAS TEMP LVG CONDENSER OR LAST IMPINGER °C (°F)
A) 1	~~7:48 PM~~ 7:51	5	270	1.5	1.4	~~832.924~~ 833.1	90	80	250	60
2	7:54	5	280	1.5	1.4	837.5	90	80	250	60
3	7:57	5	290	1.5	1.4	839.5	90	80	250	60
4	8:00	6	290	1.5	1.4	842.2	90	80	250	60
B) 1	~~8:00:30~~ 8:03:30	4	290	~~1.0~~ 1.1 RM	1.0	~~—~~ 844.2	100	80	250	60
2	8:06	4	290	1.1	1.0	846.2	100	80	240	60
3	8:09	5	290	1.4	1.3	848.5	100	80	240	60
4	8:12	5	290	1.2	1.1	850.7	100	80	240	60
C) 1	~~8:13~~ 8:16	5	290	1.3	1.2	~~—~~ 852.8	100	80	240	60
2	8:19	5	290	1.3	1.2	855.0	100	80	240	60
3	8:22	5	290	1.5	1.4	857.4	100	80	240	60
4	8:25	5	290	1.2	1.1	859.6	100	80	240	60
D) 1	~~8:25:30~~ 8:28:30	5	280	1.5	1.4	~~—~~ 861.8	100	80	250	60

RAMCON emissions test log sheet, cont. DATE_____ LOCATION_____ TEST NO._____

TRAVERSE POINT	SAMPLING TIME θ (min)	VACUUM mm Hg (in. Hg)	STACK TEMP T_s (°F)	VELOCITY HEAD ΔP_s (in. H_2O)	ORFICE DIFF. PRESSURE ΔH (in. H_2O)	GAS VOLUME Vm ($ft.^3$)	GAS SAMPLE TEMP. (°F) in	GAS SAMPLE TEMP. (°F) out	SAMPLE BOX TEMP. (°F)	IMPINGER TEMP (°F)
2	8:31:30	5.0	290	1.5	1.4	864.2	100	80	250	50
3	8:34	6	290	1.5	1.4	866.5	100	80	250	50
4	8:37	6	290	1.5	1.4	869.0	100	80	250	50
E) 1	8:38 / 8:41	6	290	1.7	1.6	871.0	110	80	250	50
2	8:44	6	290	1.6	1.5	873.8	110	80	250	50
3	8:47	6	290	1.4	1.3	876.2	110	80	250	50
4	8:50	6	290	1.4	1.3	878.7	110	80	250	55
F) 1	8:50:30 / 8:53:30	6	290	2.0	1.9	881.0	110	80	250	50
2	8:56:30	7	290	1.8	1.7	883.6	110	80	250	50
3	8:59:30	7	290	1.6	1.5	886.2	110	80	250	50
4	9:02:30	6	290	1.4	1.3	887.7	110	80	250	50
G) 1	9:03 / 9:06	7	290	2.0	1.9	891.2	110	80	250	50
2	9:09	8	290	2.0	1.9	894.0	110	80	250	50
3	9:12	7	290	1.8	1.7	896.7	110	80	260	50
4	9:15am	7	290	1.6	1.5	899.4	110	80	260	50

IX. CALIBRATIONS

POSTTEST DRY GAS METER CALIBRATION DATA FORM
EPA CALIBRATED ORIFICE

Sam T. Tenney

Calibration Date 8-2-84
Device Number 2
Device K' 2.498 x 10^{-4}
Meter Box No. C-28
D.G.M. No. 700205
P_{bar} 29.39 mmHg

Sampling Time (θ) min.	Vacuum (in. Hg)	Pressure Diff. Orf. Mtr (H_2O)	Gas Sample Volume (ft^3)	Gas Sample Temp. At Dry Gas Meter (°F) Inlet	Outlet
Start / Stop		ΔH avg.	V_m / $V_{m}std$	°F / °R	°C / °K
0 / 15	19"	.34	956.20 / 962.149	84 / 84	78 / 78
RUN 1	19"	—	5.949 / 5.706	81 / 541	27 / 300
0 / 15	19"	.34	966.00 / 971.964	84 / 83	78 / 77
RUN 2	19"	—	5.964	80.5 / 541	27 / 300
	19"	.34	972.10 / 978.05	83 / 83	77 / 77
RUN 3	19"	—	5.950	80 / 540	27 / 300

$V_{m}std = V_s$

$$V_s = \frac{K' P_o \theta}{\sqrt{T_o}}$$

Where;

$V_{m}std$ = Dry gas volume through meter at standard conditions, cu.ft. (Determine using Method 5 formulas and procedures.)
V_s = Dry gas volume through calibrated orifice at standard conditions.
K' = Calibrated orifice constant (Determined by EPA).
P_o = Pressure at entry to orifice mm Hg.
T_o = Temperature at entry to orifice °K.

$$V_s = \frac{(.0002498)\ (746.5)\ (15)}{(17.3)}$$

$$V_{m}std = \frac{17.64\ (5.949)}{} \left[\frac{(29.39 + \frac{(.34)}{13.6})}{(541)} \right]$$

$$Y = \frac{V_s}{V_{m}std} = \frac{5.7097}{5.7060} = 1.0007$$

$$V_s = \frac{(.0002498)\ (746.5)\ (15)}{(17.3)}$$

$$V_{m}std = \frac{17.64\ (5.964)}{} \left[\frac{(29.39 + \frac{(.34)}{13.6})}{(541)} \right]$$

$$Y = \frac{V_s}{V_{m}std} = \frac{5.7097}{5.700} = .9982$$

$$V_s = \frac{(.0002498)\ (746.5)\ (15)}{(17.3)}$$

$$V_{m}std = \frac{17.64\ (5.95)}{} \left[\frac{(29.39 + \frac{(.34)}{13.6})}{(541)} \right]$$

$$Y = \frac{V_s}{V_{m}std} = \frac{5.7097}{5.717} = .9987$$

(33)

POSTTEST DRY GAS METER CALIBRATION DATA FORM
EPA CALIBRATED ORIFICE

Sam T. Turner

Calibration Date 7-13-84
Device Number 2
Device K' 2.498 x 10^{-4}
Meter Box No. C-282
D.G.M. No. 700205
P_{bar} 29.34 mmHg

Sampling Time (θ) min.	Vacuum (in. Hg)	Pressure Diff. Orf. Mtr (H_2O)	Gas Sample Volume (ft^3)	Gas Sample Temp. At Dry Gas Meter (°F) Inlet	Outlet
Start / Stop		ΔH avg.	V_m / $V_{m}std$	°F / °R	°C / °K
0 / 15	19"	.34	568.70 / 574.652	88 / 90	82 / 82
RUN 1	19"	—	5.952 / 5.64	86 / 546	30 / 303
	19"	.34	575.20 / 581.153	89 / 90	82 / 82
RUN 2	19"	—	5.953 / 5.679	86 / 546	30 / 303
	19"	.34	581.30 / 587.334	90 / 90	82 / 82
RUN 3	19"		6.034 / 5.72	86 / 546	30 / 303

$V_{m}std = V_s$

$$V_s = \frac{K' P_o \theta}{\sqrt{T_o}}$$

Where;

$V_{m}std$ = Dry gas volume through meter at standard conditions, cu.ft. (Determine using Method 5 formulas and procedures.)
V_s = Dry gas volume through calibrated orifice at standard conditions.
K' = Calibrated orifice constant (Determined by EPA).
P_o = Pressure at entry to orifice mm Hg.
T_o = Temperature at entry to orifice °K.

$$V_s = \frac{(.0002498)\ (745.2)\ (15)}{(174)}$$

$$V_{m}std = \frac{17.64\ (5.95)}{} \left[\frac{(.934) + \frac{(.34)}{13.6}}{(546)} \right]$$

$$Y = \frac{V_s}{V_{m}std} = \frac{5.67}{5.64} = 1.005$$

$$V_s = \frac{(.0002498)\ (745.2)\ (15)}{(174)}$$

$$V_{m}std = \frac{17.64\ (5.95)}{} \left[\frac{(.934) + \frac{(.34)}{13.6}}{(546)} \right]$$

$$Y = \frac{V_s}{V_{m}std} = \frac{5.67}{5.679} = .9998$$

$$V_s = \frac{(.0002498)\ (745.2)\ (15.2)}{(174)}$$

$$V_{m}std = \frac{17.64\ (6.034)}{} \left[\frac{(.934) + \frac{(.34)}{13.6}}{(546)} \right]$$

$$Y = \frac{V_s}{V_{m}std} = \frac{5.74}{5.72} = 1.003$$

METER BOX CALIBRATION DATA AND CALCULATION FORM

(English units)

Date 8-29-81 Meter box number 700205

Barometric pressure, P_b = 29.90 in. Hg Calibrated by Sumner Tough

Orifice manometer setting (ΔH), in. H_2O	Gas volume: Wet test meter (V_w), ft^3	Gas volume: Dry gas meter (V_d), ft^3	Temperatures: Wet test meter (t_w), °F	Temperatures: Dry gas meter: Inlet (t_{d_i}), °F	Temperatures: Dry gas meter: Outlet (t_{d_o}), °F	Temperatures: Dry gas meter: Avg[a] (t_d), °F	Time (Θ), min	Y_i	$\Delta H@_i$ in. H_2O
0.5	~~8~~9.5	9.8	78	82	107	95	20.80	.9987	1.32
1.0	~~8~~15.17	15.66	78	84	105	95	23.50	.9968	1.32
1.5	10								
2.0	~~10~~11.80	12.26	78	84	108	96	13.0	.9941	1.33
3.0	~~10~~12.85	13.22	78	84	108	96	11.5	1.004	1.33
4.0	10		78	85	111	98	7.75	.9919	1.32
							Avg	.997	1.32

ΔH, in. H_2O	$\frac{\Delta H}{13.6}$	$Y_i = \frac{V_w P_b (t_d + 460)}{V_d (P_b + \frac{\Delta H}{13.6})(t_w + 460)}$	$\Delta H@_i = \frac{0.0317\ \Delta H}{P_b (t_d + 460)} \left[\frac{(t_w + 460)\ \Theta}{V_w}\right]^2$
0.5	0.0368		
1.0	0.0737		
1.5	0.110		
2.0	0.147		
3.0	0.221		
4.0	0.294		

[a] If there is only one thermometer on the dry gas meter, record the temperature under t_d.

RAMCON ENVIRONMENTAL CORPORATION

Date 7-12-84 Thermocouple number 3' #2

Ambient temperature 25 °C Barometric pressure 29.34 in. Hg

Calibrator Turner Reference: mercury-in-glass ✓

other

Reference point number[a]	Source[b] (specify)	Reference Thermometer Temperature, °C	Thermocouple Potentiometer Temperature, °C	Temperature Difference,[c] %
75°F	Ambient Temp	Mean 75.5	76	99.3 %
32° F 0°C	ice bath	32°F 0°C	32°F 0°C	100 %
100°C	boiling water	100°C	100°C	100 %
80°F	7-11-84	80°F	80°F	100 %

[a]Every 30°C (50°F) for each reference point.

[b]Type of calibration system used.

[c] $\left[\frac{(\text{ref temp, °C} + 273) - (\text{test thermom temp, °C} + 273)}{\text{ref temp, °C} + 273}\right] 100 \leq 1.5\%.$

Figure 2.5 stack temperature sensor calibration data form.

RAMCON

Lear Siegler Stack Sampler

Heating Probe Calibration

Probe No. 1 **Probe Length** 3'

Date of Calibration 7-13-84 **Signature** Sam T. Turner

Name of Company to be tested _____

Note: 3 ft. probe - 5 min. warmup
6 ft. probe - 15 min. warmup
10 ft. probe - 30 min. warmup
Calibration flow rate = .75 CFM

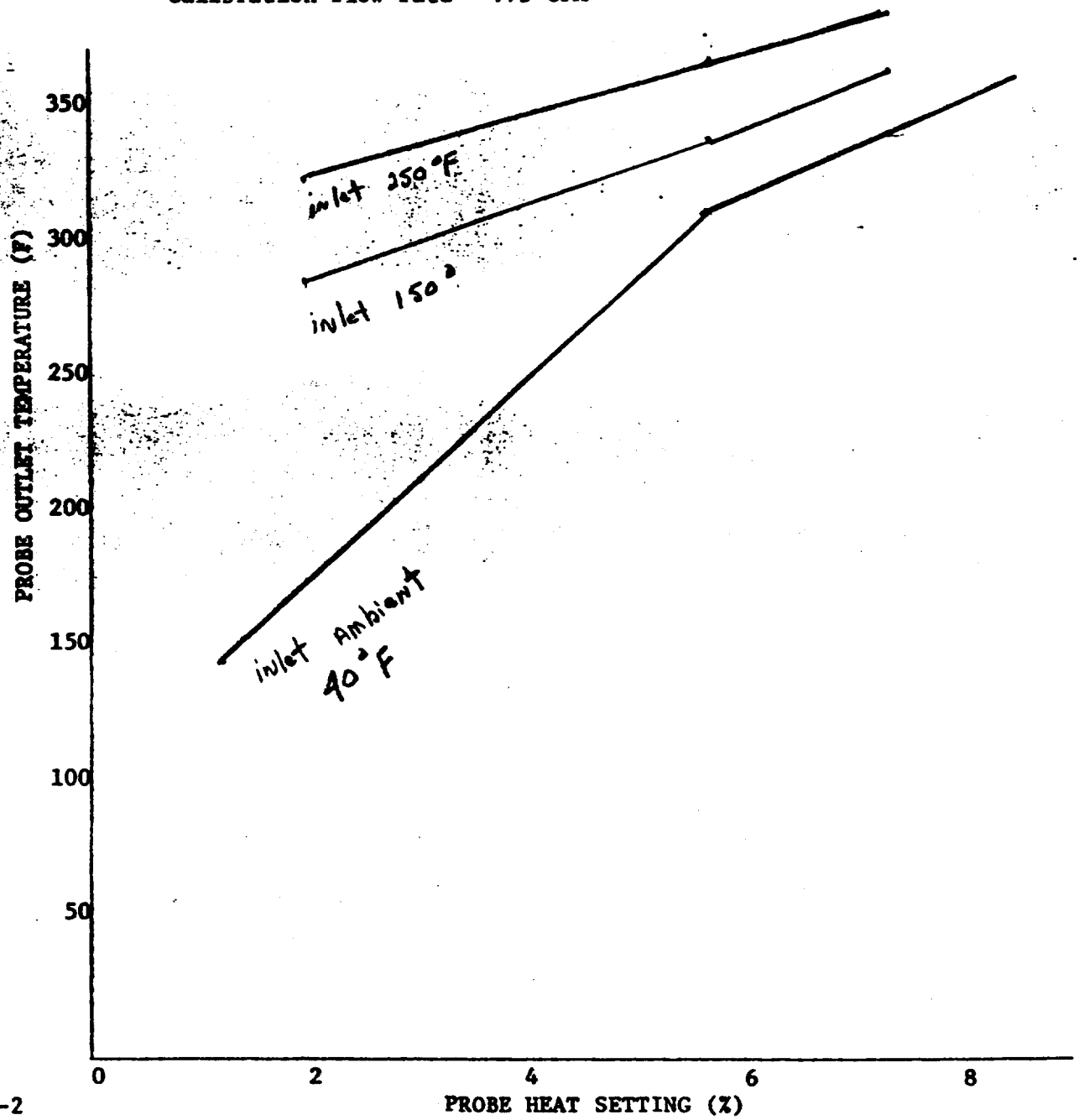

Form No. EED-17-2

RAMCON ENVIRONMENTAL CORPORATION

Lear Siegler Stack Sampler

Nozzle Diameter Calibration

Date 7-13-84 Signature Sam Turner

Nozzle No.	Average Diameter	Nozzle No.	Average Diameter
1		7	
2		8	
3		9	
4		10	
5		11	
6		12	

Pitot Tube Calibration (S Type)

Pitot Tube Identification No. 3' #2 Date 7-12-84

Calibrated by: Sam T. Turner

"A" SIDE CALIBRATION

Run No.	Δp std cm H_2O (in. H_2O)	Δp (s) cm H_2O (in. H_2O)	$C_p(s)$	DEVIATION $C_p(s)-\bar{C}_p(A)$
1	.59	.91	.82	.006
2	.44	.62	.81	.004
3	.32	.45	.82	.004
		$\bar{C}_p$ (SIDE A)		

"B" SIDE CALIBRATION

Run No.	Δp std cm H_2O (in. H_2O)	Δp(s) cm H_2O in. H_2O)	$C_p(s)$	DEVIATION $C_p(s)-\bar{C}_p(B)$
1	.60	.92	.82	.006
2	.44	.63	.82	.004
3	.31	.44	.82	.004
		$\bar{C}_p$ (SIDE B)	.82	

$$\text{AVERAGE DEVIATION} = \sigma(\text{A OR B}) = \frac{\sum_{1}^{3} |C_p(s)-\bar{C}_p(\text{A OR B})|}{3} \leftarrow \text{MUST BE} \leq 0.01$$

$$|\bar{C}_p(\text{SIDE A})-\bar{C}_p(\text{SIDE B})| \leftarrow \text{MUST BE} \leq 0.01$$

$$C_p(s) = C_p(std)\sqrt{\frac{\Delta p\ std}{\Delta p_s}}$$

Form No. EED-17-1

Date 7-12-84 Thermocouple number Hotbox

Ambient temperature 25 °C Barometric pressure 29.34 in. Hg

Calibrator Turner Reference: mercury-in-glass ✓

other _____

Reference point number[a]	Source[b] (specify)	Reference Thermometer Temperature, °C	Thermocouple Potentiometer Temperature, °C	Temperature Difference,[c] %
100°C	boiling H2O	100 °C	100 °C	100 %
76°F	Ambient	Mercury 75.8 F	75 °C	99.9 %
80°F	7-17-84	80 °F	80 °F	100 %

[a]Every 30°C (50°F) for each reference point.

[b]Type of calibration system used.

[c] $\left[\frac{(\text{ref temp, °C} + 273) - (\text{test thermom temp, °C} + 273)}{\text{ref temp, °C} + 273}\right] 100 \leq 1.5\%.$

Figure 2.5 stack temperature sensor calibration data form.

Date 7-13-84 Thermocouple number Inlet/outlet

Ambient temperature 77 °F Barometric pressure 29.34 in. Hg

Calibrator S Turner Reference: mercury-in-glass 77 °F

other _____

Reference point number[a]	Source[b] (specify)	Reference Thermometer Temperature, °C	Thermocouple Potentiometer Temperature, °C	Temperature Difference,[c] %
77	Inlet Ambient	77 °F	77 °F	100%
77 °F	Outlet Ambient	77 °F	77 °F	100%
80 °F	7-17-84	80 °F	80 °F	100%

[a]Every 30°C (50°F) for each reference point.

[b]Type of calibration system used.

[c] $\left[\frac{(\text{ref temp, °C} + 273) - (\text{test thermom temp, °C} + 273)}{\text{ref temp, °C} + 273}\right] 100 \leq 1.5\%.$

Figure 2.5 stack temperature sensor calibration data form.

X. RAMCON PERSONNEL