AP42 Section:	10.8
Related:	1
Title:	Letters and comments from EPA, contractor and industry. 1993 - 1999

Note: This material is related to a section in *AP42, Compilation of Air Pollutant Emission Factors, Volume I Stationary Point and Area Sources.* AP42 is located on the EPA web site at www.epa.gov/ttn/chief/ap42/

The file name refers to the file number, the AP42 chapter and then the section. The file name "rel01_c01s02.pdf" would mean the file relates to AP42 chapter 1 section 2. The document may be out of date and related to a previous version of the section. The document has been saved for archival and historical purposes. The primary source should always be checked. If current related information is available, it will be posted on the AP42 webpage with the current version of the section.

FAX TRANSMISSION

TO: Dallas Safriet, EFIG

FROM: Richard Marinshaw
Midwest Research Institute
Crossroads Corporate Park
5520 Dillard Road, Suite 100
Cary, North Carolina 27511-9232
Phone: (919) 851-8181, Ext. 5359
Fax: (919) 851-3232

DATE: November 23, 1998

RECEIVING FAX NUMBER: 541-0684

SENDING FAX NUMBER: (919) 851-3232

THIS FAX CONSISTS OF 6 PAGES (INCLUDING THIS PAGE)

Here is the summary of industry comments on wood preserving. Please call when you want to discuss this further.

MIDWEST RESEARCH INSTITUTE
Crossroads Corporate Park
Suite 100
5520 Dillard Road
Cary, NC 27511-9232
Telephone (919) 851-8181
FAX (919) 851-3232

Date: November 23, 1998

Subject: Summary of Comments on AP-42 Section 10.8, Wood Preserving
Update and/or Revise Sections in AP-42
EPA Purchase Order No. 8D-1933-NANX
MRI Project 4945

From: Richard Marinshaw

To: Dallas Safriet
EPA/EMAD/EFIG (MD-14)
U. S. Environmental Protection Agency
Research Triangle Park, N.C. 27711

The attachment summarizes the comments received from industry on the revised draft background report and AP-42 section on wood preserving. The comments are organized by commenter. Comments were received from Nick Bock, Kerr McGee Chemical Corporation; George Parris, American Wood Preserver's Institute (AWPI); and Mike Pierce and Mike Corn, AquAeTer (consultant to AWPI).

ATTACHMENT

SUMMARY OF INDUSTRY COMMENTS ON DRAFT AP-42 SECTION 10.8, WOOD PRESERVING

November 23, 1998

Commenter: Nick Bock, Kerr McGee

Summary:

- Several comments on industry and process description, most of which can be easily addressed.
- The only comment that presents a potential problem pertains to Table 2-3 and 2-4 of the background report. He points out that the volume of wood treated with creosote in 1995, as reported in Table 2-3, is inconsistent with the volume of creosote consumed in 1995, as shown in Table 2-4. Both of these tables were taken directly from an AWPI publication; I think AWPI would have to resolve this issue.

Commenter: George Parris, AWPI

Summary:

- Several comments on the process descripition, all of which can be easily addressed

Commenter: Mike Pierce and Mike Corn, AquAeTer

Summary:

- AquAeTer submitted two sets of extensive comments, portions of which are redundant. Their comments cover the following topics: (1) estimating fugitive emissions from creosote-treated wood storage (2) process emission factors, (3) pollutants reported in AP-42, and (4) emission factor units. These comments are discussed in more detail below.

<u>Equations for Estimating Creosote-Treated Wood Storage Emissions</u>

- AquAeTer more or less concurs with MRI approach of using the data to develop a 2-equation model rather than the 3-equation model they developed. The emission data show that immediately following removal from the retort, emissions increase for the next several hours. We questioned whether that increase was due simply to process factors without any consideration to the ambient temperature and time of day. Dennis Wallace was of the opinion that the increase in ambient temperature could have been a significant factor in the increase in emissions. Since AquAeTer's model did not account for ambient temperature effects, we chose to simplify the model, by averaging out the Day 1 data over the entire day.

- AquAeTer contends that the applicable surface area for estimating emissions from stacked poles and ties is only the outside surface of the stack (i.e., what is visible). They also state that the "... this approach has been technically accepted by the USEPA." This appears to be one of their most serious objections with the draft AP-42 section. They state that treated wood and stacks "...are stored in such a way that only the outside surfaces have the potential to emit." In the draft AP-42 section, we indicate that the applicable area is "the exposed surface area". AquaAeTer comments that the AP-42 section implies that the entire surface area of each pole or tie should be used for estimating emissions and that doing so results in a gross overestimate of emissions. They also state that the AP-42 section provides no guidance on how to estimate the applicable surface area. We disagree that emissions arise only from the outside surface of the stack. That would be case if the wood surfaces were perfectly smooth and the wood was tightly stacked in such a way that there was no air movement through the stack. My guess is that treated wood is intentionally stacked loosely to allow air movement through the stack so the stack can dry out. It is true that the AP-42 section provides no guidance on estimating the applicable surface area. This ambiguity was intentional because there is no simple way of doing it. Assuming the entire surface area of each tie/pole gives off emissions probably does result in an overestimate of emissions because there will be some areas of the stack that are not exposed to moving air. However, using only the outside surface area of the stack will undoubtedly result in a great underestimation of emissions. We would content that using the entire surface area of each piece provides a better estimate than does using the stack outside surface area. To address this comment, we should check with wood preserving industry representative or State agency personnel about actual stacking practices.

- AquAeTer comments that the AP-42 section fails to provide information on stacking geometry, production schedules, and shipping practices. They list several facts that address these areas. We did not have this information previously; it can easily be incorporated into the AP-42 section. However, adding this information will still not resolve the issue of what surface area to use in the fugitive emission calculations.

- AquAeTer points out that the temperature correction factor applies only to naphthalene and cannot be used for other compounds. We concur with their comment. They suggest using a generic correction factor for creosote emissions, but note that it may not be appropriate for some compounds. We are not sure what to recommend. Using separate temperature correction factors developed for each of the eight compounds would provide the best estimates. However, it would take a significant effort (10 to 20 hours?) to develop separate correction factors, and incorporating them into the AP-42 section would complicate the method. The simplest option would be to take

out the equations for all compounds except naphthalene or to use the generic correction factor.

Process Emission Factors

- AquAeTer disagrees with the use of existing test data for specific steps of the treatment process to fill in the emission data gaps for other steps in the treatment process. However, they note that this method "...may provide a reasonable first estimation of emissions when no data are available."

- AquAeTer questions the use of limited data to develop emission factors. They note that the VOC data is taken from a single test at one plant, and the speciated organic emission data also are taken from a single test at another plant. Given that we used the only data that were available, I do not how we can resolve this problem, which is common to many AP-42 sections. That is, there is a lack of data from a sufficient number of tests to provide a reasonable assurance that the emissions factors are representative of typical operations.

- AquAeTer points out that the data reported in the AP-42 section do not account for most of the VOC emissions. They state that GERG data (we do not know who or what GERG is) indicate that PAH's account for 44.6 percent of "creosote vapor emissions," but the AP-42 section indicates that only 2 percent of the VOC's are PAH's. They also point out that the AWPI emission estimation computer program estimates naphthalene as 3 percent of the VOC emissions from the treatment process (i.e., from the creosote) and that "non-treatment process naphthalene emissions are calculated as 42 percent of the VOC emissions." I think the latter statement is saying that 42 percent of the VOC is naphthalene that is released from the wood as it is heated. It is difficult to believe that that would be the case. Data from NCASI indicates that VOC's from lumber kilns are primarily methanol and formaldehyde. In any case, the problem again is that we are dealing with a limited amount of data; I do not know how we can resolve this situation with the data on hand. We could try to obtain the GERG data, but there is no guarantee that data would be acceptable for use in AP-42.

- AquAeTer comments that the AP-42 section does not look at processes, controls, timing, and equipment in the level of detail that is addressed in the AWPI Emissions Guidance Document. We do not argue with that. However, we are constrained by the lack of emissions data that could be incorporated into the AP-42 section. The AWPI Emissions Guidance Document provides methods of estimating theoretical emissions from various stages of the treatment process based on vapor weight fractions, release volumes, emission factors for the synthetic organic chemical manufacturing industry (SOCMI)

and other information. With the exception of the TANKS program, AP-42 generally relies on emission test data rather than theoretical estimates of emissions. It is possible to develop an AP-42 section along the lines of AWPI's Guidance Document, but doing so would require a considerable level of effort.

Pollutants Reported

- AquAeTer comments that the AP-42 section addresses only one HAP, naphthalene, and does not address the other three HAP's that have been identified by EPA (i.e., dibenzofuran, quinoline, and biphenyl). Since we have no data on the other three pollutants, I don't see how we could develop emission factors for them.

- AquAeTer also comments that the AP-42 section (1) presents emission factors for PAH's that are not HAP's and (2) the section is "misdirected" because HAP's "...should be the main thrust of emissions factor guidance provided by AP-42..." In this case, AquAeTer is wrong on both counts. First, all PAH's are POM's, and POM is included in the HAP list in the Clean Air Act. Second, AP-42 is not limited to HAP's, but should include criteria pollutants, and other pollutants for which there are usable data.

Emission Factor Units

- AquAeTer comments that, in the AP-42 section, "...pollutant emissions from treatment processes are given in volume per mass multiplied by an annual production rate yielding an emission rate per year." I do not understand this comment. The units for treatment processes actually are in units of pounds per thousand cubic feet of wood treated.

Tom
Diggs

214- 665 - 7214

cotton ginning

petro 6686

From: Roger Fritz, AM/7, 608-266-1201, fritzr@dnr.state.wi.us <FRITZR@dnr.state.wi.us>
To: RTP10.RTPTSD(SAFRIET-DALLAS)
Date: 11/20/97 10:54am
Subject: AP42 10.8 draft error

I think there is an error in a table of the background report for the wood preserving AP42. tables 2-3 on page 2-7 and table 4-3 on page 4-9 both show the concentration of various components of creosote. Table 2-3 has concentrations very similar to information I have from a facility I am reviewing so I think it is correct. The concentrations in table 4-3 are orders
of magnitude lower and I suspect are incorrect. If they are correct, the testing used from reference 11 may not be representative of typical creosote and calls into question the emission factors proposed based on ref. 11.(ref 5 in 10.8)

Also, it would be nice to have some more meaningful emission factors. I would like at least a VOC emission factor for the whole empty cell process. Ch 10.8 indicates 3 major emission points (charge immediately after removal, vacuum and
blowback). Only an emission factor for VOCs from blowback is provided in table
10.8-1, and that is based on ref. 5 which I question above. The facility I am reviewing estimates their emissions based on partial pressure calculations to be about 20 times that suggested by your VOC emission factor of 6.7 E-5 lb/cf from blowback. i have no idea which estimate is close to reality.

Just thought you'd be interested.

UNITED STATES ENVIRONMENTAL PROTECTION AGENCY

MAR 15 1994

Mr. Martin J. Wikstrom
Manager, Regulatory Affairs
American Wood Preservers Institute
1945 Old Gallows Road, Suite 150
Vienna, Virginia 22182

Dear Martin:

Enclosed are a series of calculations and process descriptions that I have put together in an attempt to make a determination of whether uncontrolled creosote treatment plants are major sources. The calculations were taken from data contained in five emissions tests, four conducted by EPA and one by Koppers Industries, Inc. The resulting calculation of annual emissions of naphthalene are widely different. Two tests support a determination that emissions are at major source levels, i.e., greater than 10 tons per year of naphthalene, a hazardous air pollutant (HAP). The other three indicate that uncontrolled emissions are significantly below the 10 ton per year limit.

I have done an additional exercise where I have compared the annual emissions of naphthalene determined from the tests with an estimate of the total naphthalene consumed at the plants. These numbers are very interesting. They show that the loss of naphthalene to uncontrolled air emissions could vary all the way from over 30 percent of the total naphthalene received to less than 0.001 percent.

I am requesting that you distribute the attached calculations and descriptions of the two recent EPA tests to appropriate members of your environmental committee for their review and comment. We would especially appreciate reviews by Nick Bock, Steve Smith and Martin Rollins. We have reviewed available documentation for each of the five tests and currently have no reason to doubt the test results with the following exceptions:

1. The calculated flows in and out of the condenser down stream of the vacuum pump at the Koppers, Susquehanna, PA plant appear to be reversed. Steve Smith at Koppers, is having these reviewed and corrected by his testing contractor. Even with these changes, the resulting calculations of HAP emissions will not change significantly.

CONCURRENCES

SYMBOL	SSS	SDS						
SURNAME	Crapsley	Vanwert						
DATE	3/15/94	3/15/94						

EPA Form 1320-1 (12-70)

OFFICIAL FILE COPY

*U.S. GPO : 1986-159-319

2. The flow calculations for the fugitive emissions at the Wycoff test conducted for EPA Region X in 1986 by Engineering-Science, Inc., are questionable and probably have been overstated. Here again, the resulting annual emissions calculated from the test are less than one ton per year of naphthalene. Even if the flow was overstated, resulting in a lower annual emission from the open cylinder and wood charge, this would not greatly effect the conclusion about emissions from this plant.

The emission point with the largest variations are the uncontrolled emissions from the vacuum system. The vacuum system emissions are the real issue in this determination.

If at all possible, I would appreciate receiving comments in writing or by telephone before the end of April. I can be reached at (919) 541-0881.

Sincerely,

Eugene P. Crumpler
Industrial Studies Branch

Enclosure

ESD/ISB EPCrumpler/bjoverman x5595 Rm. 1013 NCMutual (MD-13)
3/15/94 FILE NO._____ DISK:epc wIKSTROM.LTR

03/11/94

EMISSIONS SUMMARY FOR TEST REPORTS NAPHTHALENE

		Tons/yr naphthalene
1.	EPA test at BPB, DuBois, PA (Sept, 1993)	
	Uncontrolled hood emissions	0.07
	Uncontrolled vacuum pump emissions	36.2
	Uncontrolled work tank emissions	64×10^{-6}
	TOTAL	**36.3**
	Controlled emissions after scrubber	0.18
2.	Wycoff (Pacific Resources) test, March 1986 Bainbridge Island, WA	
	Uncontrolled vacuum pump emissions	18.1
	Fugitive from retort	0.75
	TOTAL	**18.8**
3.	Koppers, Feather River, CA (Feb, 1989)	
	Total stack emissions, vacuum pumps and work tanks	1.3
	Cylinder fugitives	0.2
	General fugitives	0.02
	TOTAL (excluding storage yard)	**1.5**
4.	Koppers Industries, Susquehanna, PA test	
	Vacuum pump before condenser	0.021
	Vacuum pump after condenser	0.001
5.	Kerr-McGee, Avoca, PA (Sept 1993 test)	
	Total flow to incinerator	0.24
	Total flow out of incinerator	None detected

Burke-Parsons-Bowlby Test at DuBois, PA (September 1993)

Calculations from draft test report

1. Hood emissions:

Testing was done as THC using Method 25A

Run 1 yielded 7.5 lb/hr propane for hood emissions
Run 2 yielded 6.0 lb/hr propane for hood emissions
Average: 6.8 lb/hr propane

Propane has 3 carbons and 8 hydrogens; to convert to carbon the ratio of carbon to total mole weight is: 36/44 = 0.818

Converting to carbon 6.8 lb/yr x 0.818 = 5.6 lb/hr carbon

Assume the ratio of carbon to total elements in creosote is:

$$C_{12}H_{12} = \frac{144}{156} = 0.923 \text{ carbon}$$

$$5.52 \text{ lb/hr carbon} \times \frac{1 \text{ lb creosote}}{0.923 \text{ lb carbon}} = 6.1 \text{ lb/hr creosote}$$

- Liquid creosote concentration measured during blowback from retort was 2.7%
- BPB operates 260 days/yr
- Hood emissions occur 1 hour/day/cylinder
- Three cylinders normally operating
- Hood capture efficiency estimated to be 90%

6.1 lb/hr creosote x 1 hr/1 day x 260 day/yr x 1/0.90 capture efficiency x 3 cylinders = 5287 lb/yr creosote

5287 lb creosote/yr x 0.027 lb naphthalene/lb creosote = 143 lb naphthalene/yr
= 0.07 ton naphthalene/yr

BPB test (con'd)

2. Vacuum pump emissions:

Problems were encountered with measurement of the flow off of the vacuum pump. therefore an alternate method was devised to obtain an estimate of the vacuum pump flow rate. The manufacturer of the pumps, Intervac, was contacted and the following was determined:

Flowrate exhausting pump is 114 scfm as determined by the cylinder vacuum and the pump performance curve (see attached addition to DuBois report, Section 4.2).

Assume vapor is saturated with H_2O_c at 116°F, H_2O is 11% by volume.
114 scfm x 0.11 = 12.5 scfm of H_2O
114 - 12.5 = 101.5 DSCFM

Boultonizing Cycle

Naphthalene analysis from draft report for 3 MM5 runs for the vacuum pump exhaust during Boultonizing are:

16,000 mg/DSCM
4,500 mg/DSCM
8,200 mg/DSCM
Average = 9,566 mg/DSCM naphthalene

The Boulton cycle time at BPB is about 12 hours

101.5 DSCFM x 60 min/yr x 12 hours = 73,080 DSCF day

73,080 DSCF/day x $0.0283 m^3/ft^3$ = 2,068 DSCM day

2,068 DSCM/day x 9566 mg NAP/m^3 = 19,782 x 10^6 mg day

19,782 x 10^6 mg NAP/day x 1 gm/1000 mg x lb/454 gram
= 43.6 lb NAP/day

Total uncontrolled emissions during Boultonizing are:

43.6 lb NAP/day x 260 day/yr x 3 cylinders = 33,987 lb/yr
= 17.0 tons/yr from Boultonizing cycle

BPB test (cont'd)

Final vacuum

- Use 101.5 DSCFM as above
- Naphthalene analysis was 130,000 mg/DSCM
- Cycle was 1 hour per day

101.5 DSCF x 60 min/day x 3 cylinders x 0.02832 M^3 /ft^3 x
130,000 Mg/M^3 x 1 gm/1000 mg x 1 lb/454 gm x 260 days/yr
= 38,520 lb/yr
= 19.2 ton/yr from final vacuum cycle
17.0 + 19.2 = 36.2 ton/hr naphthalene from vacuum pump cycles

3. Blowback Emissions:

The test reports indicate that the flow rate could not be measured during the MM5 testing. Therefore, there was no net flow of vapor from the work tank reported. However, levels in the work tank were recorded before and after each blowback. The attached page, which will be appended to the final test report, shows the calculation of the flow from the tank based on level changes.

For the first blowback, the volume displaced was 28.04 M^3.

For the second blowback, the level readngs were 99,200 lbs creosote befor the second blow back and 130,400 lbs after. The difference is 1,200 lbs of creosote.

31,200 lbs creosote x 1 gal/8.34 lb x 1/1.05 x 0.00379M^3/ft^3= 13.50 M^3 displaced

Total: 28.04 + 113.50 = 41.54 M^3/line/day

From the test report, the concentration of naphthalene was 1.8 mg/DSCM
Not bothering to correct to standard conditions because the answer is so small:

41.5 M^3/day-line x 3 lines x 260 days/yr = 32,401 M^3/yr

32,401 M^3/yr x 1.8 mg/DSCM x 1 gm/1000 mg x 1 lb/454 gm
= 0.128 lb naphthalene/yr
= 64.2 x 10^{-6} ton naphthalene/yr

BPB test (cont'd)

4. Controlled Emissions

The controlled emissions from the scrubber were measured by tracking total hydrocarbon emissions in the scrubber exhaust. The emissions were as follows:

lb/hr THC	Total time - hrs	lbs THC
2.1	12 - Boultonizing cycle	25.2
1.7	0.25 - first blowback	0.43
1.6	2 - pressure cycle	3.2
1.7	0.25 second blowback	0.43
1.9	1 - final vacuum	1.9
6.5	1 - open door exhaust emissions	6.5
	TOTAL	**37.6**

Weighed total was 37.6 lb THC for 17 hours of the cycle.

$$37.6 \text{ lb} \times \frac{24 \text{ hrs}}{17 \text{ hrs}} \times 260 = 13{,}801 \text{ lb/yr propane}$$

Converting propane to carbon

13,811 lb/yr propone x 0.817 = 11,283 lb/yr carbon

Converting carbon to creosote

$$\frac{156}{144} \times 11{,}283 = 12{,}223 \text{ lb/yr creosote}$$

If naphthalene is 3% creosote then

$$12{,}223 \text{ lb/yr creosote} \times \frac{0.03 \text{ lb naphthalene}}{1 \text{ lb creosote}}$$

= 366 lb/yr naphthalene

= 0.18 ton/yr naphthalene

Emissions Test Report, Air Toxics Sampling of Wycoff, Inc., Bainbridge Island, WA March 1986, Engineering Science, NTIS P87-123162

Only one retort was operating during test. Three cylinders normally operate. Flow rates are for the first hours of vacuum, cool down, or the beginning of conditioning. The process is a 56-hour creosote cycle on poles.

Boultonizing Cycle	Final Vacuum
Flow 342 DSCFM	Flow 319 DSCFM
Napthalene 2,500,000 μg	Naphthalene 900,000 μg

The report determines that 111 lbs naphthalene was emitted during a 56 hour cycle as follows:

106 lb naphthalene during 48 hour conditioning cycle
1.06 lb naphthalene during final vacuum
4.68 lb naphthalene fugitive emissions
Total 111 lbs naphthalene for a 56 hour cycle

If all three cylinders were operating:

250 days/yr operation with 2 vacuum pumps operating

250 days x 24 = 6000 hrs/yr of operation

6000 hrs/yr x 3 cylinders = 18,000 cylinder hrs/year
18,000 ÷ 56 hrs = 321 cycles/yr
106 lb naphthalene Boultonizing cycle x 321 = 35,868 lb naphthalene/yr
1.06 lb/final vacuum cycle x 321 = 340 lb naphthalene/yr
4.68 lb/fugitives/cycle x 321 = 1502 lb naphthalene/yr
Total 37,710 lb naphthalene/yr

TOTAL: 18.9 ton naphthalene/yr

Feather River, Orville, CA, Koppers Industries. Stack sampling conducted Feb 15-16, 1989. From Ebasco Services, Inc., Final Emissions Data Report, Emissions Testing Program, Koppers Superfund Site, Orville, CA, U.S. EPA, Region 9, December 1989

From Table 6-19, Summary of Emissions Sources:

		Naphthalene
#3 cylinder stacks		264 kg/yr
#3 cylinder fugitives		13 kg/yr
#4 cylinder stacks		868 kg/yr
#4 cylinder fugitives		149 kg/yr
Total general fugitives		17 kg/yr
Wood storage		9,500 kg/yr
	TOTAL	10,813 kg/yr

Converting to tons/yr:

#3 + #4 stacks (264 + 868) x 2.205 lb/kg ÷ 2000 = 1.25 ton/yr
#3 + #4 fugitives (13 + 149) x 2.205 ÷ 2000 = 0.18 ton/yr
General fugitives 17 x 2.205 ÷ 2000 = 0.018 ton/yr

Draft Emissions Test Report, Kerr-McGee Chemical Corporation, Avoca, PA, December 1992 (test conducted September 1993)

Flow pages 3-11, Table 3-5, Inlet Concentrations to Incinerator, total hydrocarbon measurements.

Boulton cycle	1.22 lb/hr propane
First blowback	0.77 lb/hr propane
Pressurization	0.12 lb/hr propane
Second blowback	Not measured
Final Vacuum	Not measured
Open retort	Not measured

During the test the treatment cycle was as follows:

Cycle	Time
Boulton cycle	12 hours
First blowback	15 minutes
Pressurization	30 minutes
Second blowback	15 minutes
Final vacuum	1 hour
Open retort	1 hour

Since no measurements were made for the second blowback, final vacuum and fugitives for open retort, the following assumptions about emissions were made:

1. Second blowback is same as first blowback.
2. Final vacuum is same as Boulton cycle.
3. The fugitives from the retort are the same as those at BPB test; 6.75 lb/hr propane.

Calculations for the entire cycle are as follows:

Boulton cycle	1.22 lbh/yr x 12 hr	=	14.6 lb propane
First blowback	0.77 lb/hr x 0.25 hr	=	0.19 lb propane
Pressurization	0.12 lb/hr x 0.5 hr	=	0.06 lb propane
Second blowback	0.77 lb/hr x 0.25 hr	=	0.19 lb propane
Final vacuum	1.22 lb/hr x 1 hour	=	1.22 lb propane
Fugitives from retort	6.75 lb/hr x 1 hour	=	6.75 lb propane
	TOTAL		23.02 lb propane

Total cycle is 23.02 lb and cycle is 15 hours

23.02 lb ÷ 15 hours = 1.53 lb/hr average

Annual emissions based on two operating lines operating 5 days a week, 50 weeks per year

1.53 lb propane/hr x 2 lines x 24 hrs/day x 250 days/yr
= 18,316 lb/yr THC

Converting THC as propane to naphthalene:

18,416 lb propane/yr x 0.817 lb carbon/lb propane = 15,045 lb/yr carbon

$$15{,}045 \text{ lb carbon/yr} \times \frac{156}{144} = 16{,}300 \text{ lb/yr creosote}$$

Naphthalene is 3% creosote, then:

16,300 lb/yr creosote x 0.03 = 482 lb/yr naphthalene
= 0.24 ton/yr naphthalene

For controlled emissions out of the Kerr McGee incinerator, no THC was detected.

Source Vacuum Pump Emissions Study Assisting in SARA Title III, Form R Reporting by Keystone Environmental Resources, Inc.

This test reported testing around a tube and shell water cooled condenser used to control emissions from the vacuum pump a Koppers. The results were as follows (this report is being reviewed by Keystone at Koppers request. There may be some changes in the final numbers but they are not expected to be significant):

Inlet to the condenser:

0.00483 lb/hr naphthalene

0.00483 lb/hr x 8760 hrs/yr x 1 tn/2000 lb = 0.02 tn/yr naphthalene

Outlet from the condenser:

0.00027 lb/hr naphthalene

0.00027 lb/hr x 8760 hrs/yr x 1 tn/2000 lb = 0.001 tn/yr naphthalene

COMPARISON OF ACTUAL EMISSIONS WITH POTENTIAL TO EMIT

This calculation is a comparison of the naphthalene emissions determined from the five facilities tests with an approximation of the total naphthalene received at the facility.

AWPI reports that 0.939 gallons of creosote is consumed on average for each ft^3 of wood treated.

Using: ft^3 wood treated
0.939 gal creosote/ft^3 of wood
1.05 specific gravity of creosote
3.0 percent is creosote in naphthalene

PBP, DuBois, PA

$$1{,}400{,}000\ ft^3/yr \times \frac{0.939\ gal}{ft^3} \times 1.05 \text{ specific gravity} \times \frac{8.34\ lb}{gal} \times \frac{0.03\ lb\ naphthalene}{lb\ creosote} = 172 \text{ ton/yr naphthalene}$$

36.3/172 = 32 % emitted

Wycoff, Bainbridge Island, WA

$$449{,}000\ ft^3/yr \times \frac{0.939\ gal}{ft^3} \times 1.05 \text{ specific gravity} \times \frac{8.34\ lb}{gal} \times \frac{0.03\ lb\ naphthalene}{lb\ creosote} = 55 \text{ ton/yr naphthalene}$$

18.8/55 = 34 % emitted

Koppers, Feather River, CA

$$856{,}000\ ft^3/yr \times \frac{0.939\ gal}{ft^3} \times 1.05 \text{ specific gravity} \times \frac{8.34\ lb}{gal} \times \frac{0.03\ lb\ naphthalene}{lb\ creosote} = 105 \text{ ton/yr naphthalene}$$

1.5/105 = 1.4 % emitted

Koppers, Susquehanna, PA

$$1{,}860{,}000\ ft^3/yr \times \frac{0.939\ gal}{ft^3} \times 1.05 \text{ specific gravity} \times \frac{8.34\ lb}{gal} \times \frac{0.03\ lb\ naphthalene}{lb\ creosote} = 229 \text{ ton/yr naphthalene}$$

0.0021/229 = 0.0009 % emitted

Keer-McGee, Avoca, PA

$$1{,}300{,}000\ ft^3/yr \times \frac{0.939\ gal}{ft^3} \times 1.05 \text{ specific gravity} \times \frac{8.34\ lb}{gal} \times \frac{0.03\ lb\ naphthalene}{lb\ creosote} = 160 \text{ ton/yr naphthalene}$$

0.24/ 160 = 0.15% emitted

BLOWBACK DATA AT BPB

The levels in the creosote work tank are determined by level gauges. During the testing, the level gauges were read and recorded during both blowbacks. The process engineer's notes dated 9/16/93 indicated the following level readings.

First blowback from 8:34pm to 8:49pm

Initial tank level	591
Final tank level	1239

Final blowback at 10:32pm to 11:06pm

Initial tank level	992
Final tank level	1304

Discussions with BPB plant management following the test indicate that the tank level gauges are calibrated in 100's of pounds of creosote. Therefore the tank readings are to be multiplied by 100 to get pounds of creosote in the tank. It is then possible to calculate the volume of gases displaced for the work tank during the blow back. The calculation is shown below.

Example Calculation:

The volume of gas displaced in the first blow back is calculated as follows:

Final tank level	1239	time	8:49 pm
Initial tank level	591	time	8:34 pm
Difference	648		15 minutes

Converting creosote mass to volume is calculated using a specific gravity for creosote of 1.05 as follows:

(648 level differences x 100 lbs creosote) ÷ (8.34 x1.05)) x 0.00379 $\frac{m^3}{ft^3}$ = 28.04 m^3

The flow rate is then calculated as follows:

28.04/ 15min. = 1.9 m^3m.

Addition to DuBoise report, Section 4.2

Problems were encountered with two flow measurements during the modified method 5 sampling. The first involved the determination of the flow of displaced air from the #3 work tank during the blowback periods. Velocity pressure measurements made on the vent system were erratic, and thus no realistic flow rate from the work tank could be determined. The second problem encountered dealt with the measurement of flow rates from the vacuum pump discharge during the boultonizing cycle and the final vacuum cycle. Here again, no reliable flow rate could be determined.

To remedy this situation, alternative means of obtaining some meaningful indication of flow rates at these two sample points were identified. In the case of the two blow backs into the work tank, tank gauge level measurements were recorded before and after each blow back[1]. For the blowback after the boultonizing cycle, the total tank volume displaced was 28.0 cubic meters. For the final vacuum blowback, the total volume displaced was 13.5 cubic meters. These displacements were used to calculate the mass emission rates from the work tank.

Flow rates from the discharge of the vacuum pump were estimated using the pump performance curve of the vacuum pumps at BPB. The performance curve relates the volumemetric flow rate through the vacuum pump to the inlet pressure(vacuum). The performance curve was determined by actual testing of the vacuum pump before shipment and installation at the BPB plant. An estimate of the flow rate was determined by using the vacuum recorded in the cylinder during testing. At 22 inches of Hg, the flow rate obtained from the performance curve was 113 scfm[2]. This value was used to calculate the mass flow rates for the pollutants measured at the pump discharge.

1. The details of the calculation are shown in appendix x

2. The details of the calculation are shown in appendix xx

APPENDIX

CALCULATION OF FLOW RATE FROM VACUUM PUMP AT BPB

Intervac, the manufacturer of the vacuum pump in use on line three at the time of the test provided the attached performance curve for the pumps at BPB (Note #3 pump is S/M F0496 and curve is for pump F0495). The performance curve relates the volume of flow thorugh the vacuum pump to the inlet pressure(vacuum)

The flow rate can be estimated by assuming that the cylinder vacuum, 22 in. of Hg is the inlet pressure of the vacuum pump and converting as follows:

$$\begin{array}{rl} 30.2 & \text{in Hg barometric pressure} \\ -\ \underline{22.0} & \underline{\text{in Hg}}\ \text{vacuum} \\ 8.2 & \text{in Hg absolute pressure} \end{array}$$

$$8.2 \text{ in Hg} \times \frac{25.4 \text{ mm Hg}}{\text{in Hg}} = 208 \text{ mm Hg(torr)}$$

Going to the pump curve, the circles are the <u>actual</u> tested performance. At 208 torr, the volumeritic flow rate into pump from the curve is 450 acfm at 115°F and 208 mm Hg(torr).

Converting the flow rate to atmospheric pressure (760mm Hg(torr);

$$450 \text{ acfm} \times \frac{208\text{mm Hg}}{760\text{mm Hg}} = 123 \text{ cfm}$$

Converting the flow rate to standard temperature (70°F)

$$123 \text{ cfm} \times \frac{530^{o}\text{R}}{575^{o}\text{R}} = 113 \text{ scfm}$$

PERFORMANCE DATA
LIQUID RING VACUUM PUMP
PUMP MODEL:
TRE 80-750

DATA BASED ON:

Suction dry air	:	70 deg. F
Discharge Pressure	:	29.92" Hg - 760 Torr
Sealing Liquid	:	Water @ 60 deg. F
Tolerance	:	- 10%

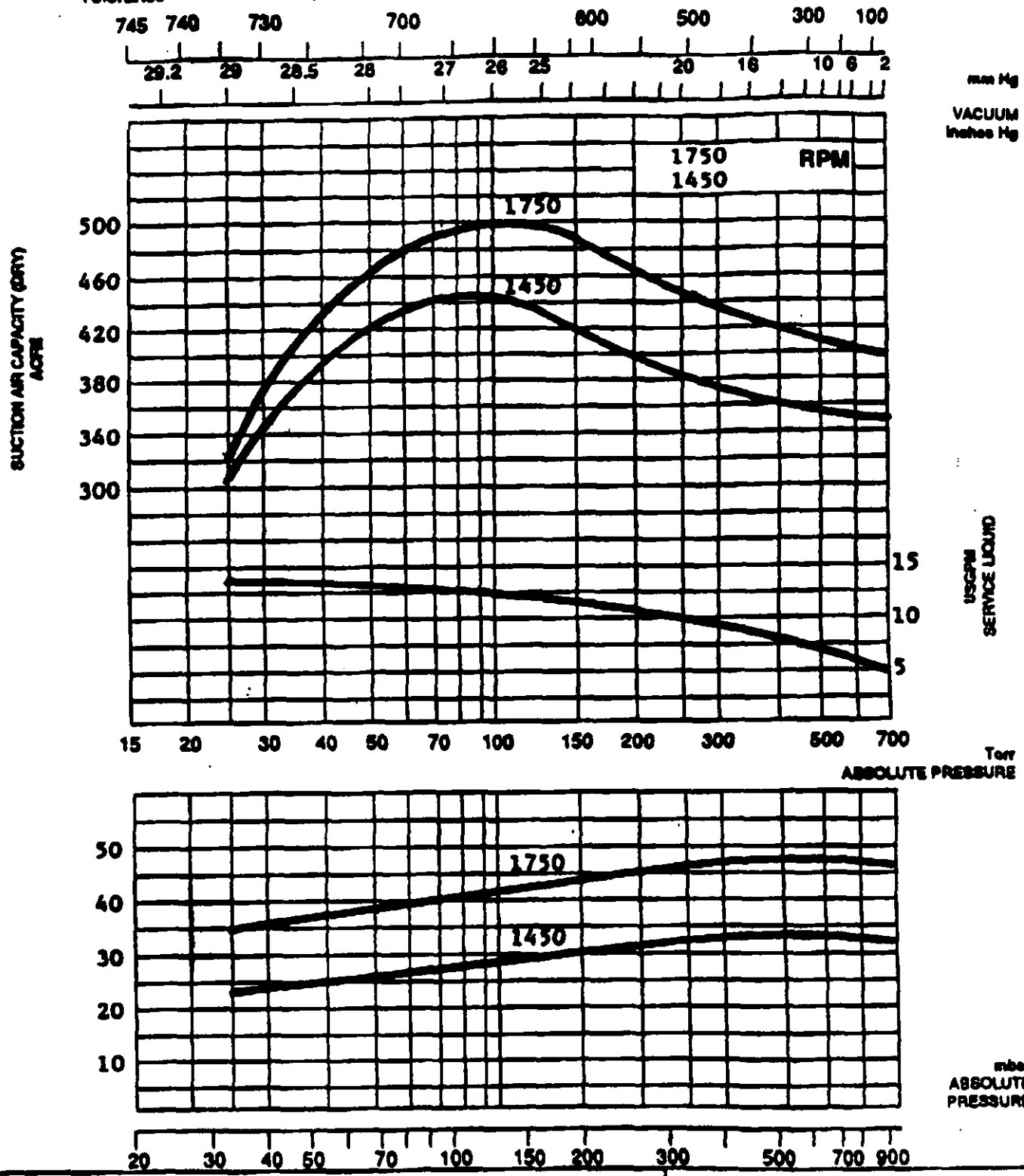

INTERVAC
System Specification Specialists

DATE: OCTOBER 1990

PAGE NO.

Jeff

Section 3A

VACUUM PUMP

Equipment # 4005

Manufacture: Intervac

Type: TRH80-7501C1G

Serial #: F0496

Fan Motor
---
1 HP Frame 143T
RPM 1740 U S Electric

Oil Pump

Goulds
Size: 1x1-1/4x6
Model NPE
Cat # 1ST21035
Imp Dia 4 3/4
S/N 2108999

Steve

Vacuum Pump Motor

U S Motors
HP 50
Frame 326T Type CT TE
RPM 1775
Installed 08/92

Intervac phone #

1-800-433-8487

716) 924-5697

Calculation of Flow Rate from Vacuum Pump at BPB.

I talked with a design engineer (Steve) at Intervac 1-800-433-8487. He faxed me the attached performance curve for the pumps at BPB. (Note #3 pump is S/N F0496 and curve is for pump F0495)

The flow rate can be estimated by taking the cylinder vacuum, 22 in of Hg and converting as follows:

30.20 in Hg	barometric pressure
− 22.0 in Hg	vacuum
8.2 in Hg	absolute pressure

$$8.2 \text{ in Hg} \times \frac{25.4 \text{ mm Hg}}{\text{in Hg}} = 208 \text{ mm Hg} = 208 \text{ Torr}$$

On the pump curve, the circles are the actual, tested performance. Read off 450 acfm

Convert to atmospheric pressure

$$450 \times \frac{208}{767} = \boxed{122 \text{ scfm}}$$

Do other corrections to get to DSCFM

INTERVAC CORPORATION

TRH-80-750

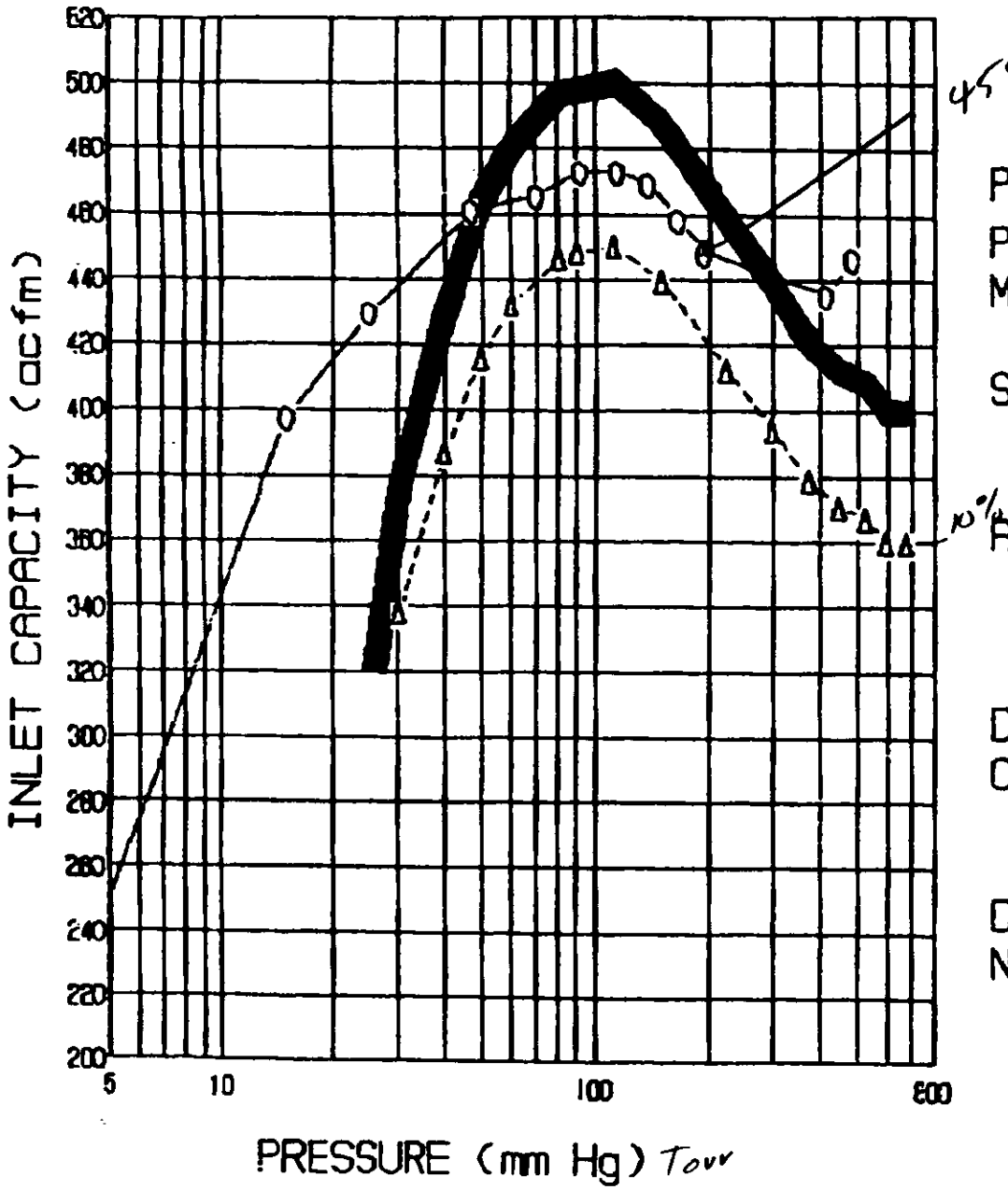

PUMP M/N - CSO 600/2-1A
PUMP S/N - E0495
MOTOR HP - 50
RPM - 1750
SEALANT FLUID - CP9001-22
TEMP (DEG F) - 200
FLOW (GPM) - AS NEEDED
AMBIENT TEMP (DEG F) - 78

DIST. : TATE ENG.
CUST. : BURK.PARSON.BL

DATE : 8/8/91
NAME : BC

Section 3A

VACUUM PUMP

Equipment # 4005

Manufacture: Intervac

Type: TRH80-7501C1G

Serial #: F0496

Fan Motor

1 HP Frame 143T
RPM 1740 U S Electric

Oil Pump

Goulds
Size: 1x1-1/4x6
Model NPE
Cat # 1ST21035
Imp Dia 4 3/4
S/N 2108999

Vacuum Pump Motor

U S Motors
HP 50
Frame 326T Type CT TE
RPM 1775
Installed 08/92

Intervac 1-800-433-8487

KD

1-0684

29 APR 1993

MEMORANDUM:

SUBJECT: Emission Test Request for Koppers Industries Inc., Florence, South Carolina

FROM: James U Crowder, Chief
Industrial Studies Branch, ESD (MD-13)

TO: Gilbert H. Wood, Chief
Emission Measurement Branch, TSD (MD-13)

This is to request that the Emission Measurement Branch conduct emissions tests at the Koppers Industries Inc., plant in Florence, SC. Emissions tests are to be conducted using the FTIR to determine the level of HAP's being emitted from treated wood inventory in Kopper's storage yard. The emissions tests will provide characterization of baseline HAP emissions from creosote and pentachlorophenol wood treatment plants and determine if control measures are needed for freshly treated wood products.

Detailed information on the facility to be tested and a discussion of the emission measurements required are presented in the attached source test request prepared by Research Triangle Institute (RTI). Currently, the RTI test request is CBI, since the trip report on which the test request is based has not been cleared by Koppers. I anticipate that the CBI restriction will be removed in the next few weeks. Questions regarding this request should be directed to Eugene Crumpler at (919) 541-0881.

Attachment

cc: Lisa Conner (SDB)
Eugene Crumpler (ISB)
Dallas Safriet (EIB)
Al Vervaert (ISB)

OAQPS:ESD:ISB:SSS:EPCRUMPLER:mhinson:NCM:1027:MD-13:541-0881:
A:KOPTEST:4/22/93:FILE:_____

DUCAA p. 381, Copy 4 (Identical Report sent to Koppers as Copy 3)

CAA CONFIDENTIAL BUSINESS INFORMATION

Declassified by L. Wrane 5/21

Does Not Contain National Security Information

RESEARCH TRIANGLE INSTITUTE

RTI

Center for Environmental Analysis

MEMORANDUM

DATE: May 20, 1993

SUBJECT: Recommendation for Emission Testing at Koppers Industries, Incorporated in Florence, South Carolina

EPA Contract 68-D1-0118, WA 45
ESD Project 91/62
RTI Project 5290-045

FROM: Betty Gatano

TO: Eugene Crumpler
OAQPS/ESD/ISB (MD-13)
U.S. Environmental Protection Agency
Research Triangle Park, NC 27711

I. Recommendation

Use Fourier transform infrared (FTIR) technology to test emissions from the treated wood storage area at the Koppers Industries, Incorporated (KII) facility located in Florence, South Carolina.

II. Basis for Selection

The KII facility was selected for emission testing because the facility treats a wide range and large volume of wood products with PCP and creosote. Due to the volume and the variety of wood treated at the KII, the facility maintains a sufficient inventory of treated wood for FTIR testing. The products treated at Koppers are also representative of the products treated by the industry as a whole. Thus, emission testing at the KII facility would serve to establish baseline emissions from wood treated with PCP and creosote.

III. Facility Description

The KII facility located in Florence, South Carolina is one of the largest wood treatment facilities in the country. At the KII facility, creosote, pentachlorophenol (PCP), and chromium copper arsenate (CCA) are used to treat ties, poles, lumber,

Post Office Box 12194 Research Triangle Park, North Carolina 27709-2194
Telephone: 919 990-8603 Fax: 919 990-8600

pilings, cross panels, and cross arms made from soft woods and mixed hardwoods. However, FTIR testing will only be conducted on wood products treated with organic preservatives since CCA has been eliminated from maximum achievable control technology (MACT) standards development. In 1991, the facility treated roughly 2 million cubic feet of products with creosote and a similar volume with PCP. Ties and poles composed approximately 78 percent of the creosote treated wood, while poles accounted for 97 percent of the PCP treated wood. The KII facility operates 24 hours per day, 7 days per week, 365 days per year. Figure 1 shows the layout of the KII facility.

The KII facility uses six cylinders to treat wood with creosote and PCP. Three of the six treating cylinders are dedicated to creosote, and three others are dedicated to PCP. The creosote cylinders measure 8 feet in diameter by 55, 123, and 126 feet in length. One PCP cylinder measures 8.3 feet in diameter by 65 feet in length, and the other two PCP cylinders measure 8 feet in diameter by 180 feet in length.

A. Creosote Process

A 60/40 creosote/coal tar mixture and grade 1 creosote are delivered to the plant in tank trucks or heated rail cars. The creosote mixture is stored in a 215,700 gallon storage tank. Two additional 36,900 gallon work tanks are used to handle the mixture, and two 58,500 gallon work tanks are used to handle the grade 1 creosote. All of these tanks are vented to the atmosphere. Creosote is transferred from the work tanks to the cylinder for wood treating and returned to the work tanks when treatment is completed.

The Boulton process is used to condition or remove moisture from green ties prior to treatment with creosote. In this process, the cylinder is filled with preservative, and a 25-inch Hg vacuum is pulled on the cylinder. Most of the vapors from the cylinder are condensed in a shell-and-tube condenser located before the vacuum pump, and the condensate is collected in a creosote blowdown tank. The length of Boultonization varies according to the species of wood. After Boultonizing, the creosote is drained from the cylinder and returned to the work tank. Total draining time lasts approximately 30 minutes. When the creosote is returned from the cylinder to the work tank, a condition called blow back is created. During blow back, the vapors in equilibrium with the preservative in the work tank are displaced by the creosote and vented to the atmosphere.

Steaming-and-vacuuming is also used to condition green lumber and poles prior to treatment with creosote. The green wood products are steamed in a cylinder from 9 to 12 hours. After steaming is complete, a water sealed, vacuum pump pulls a 25-inch Hg vacuum on the cylinder for 2 to 3 hours. Most of the

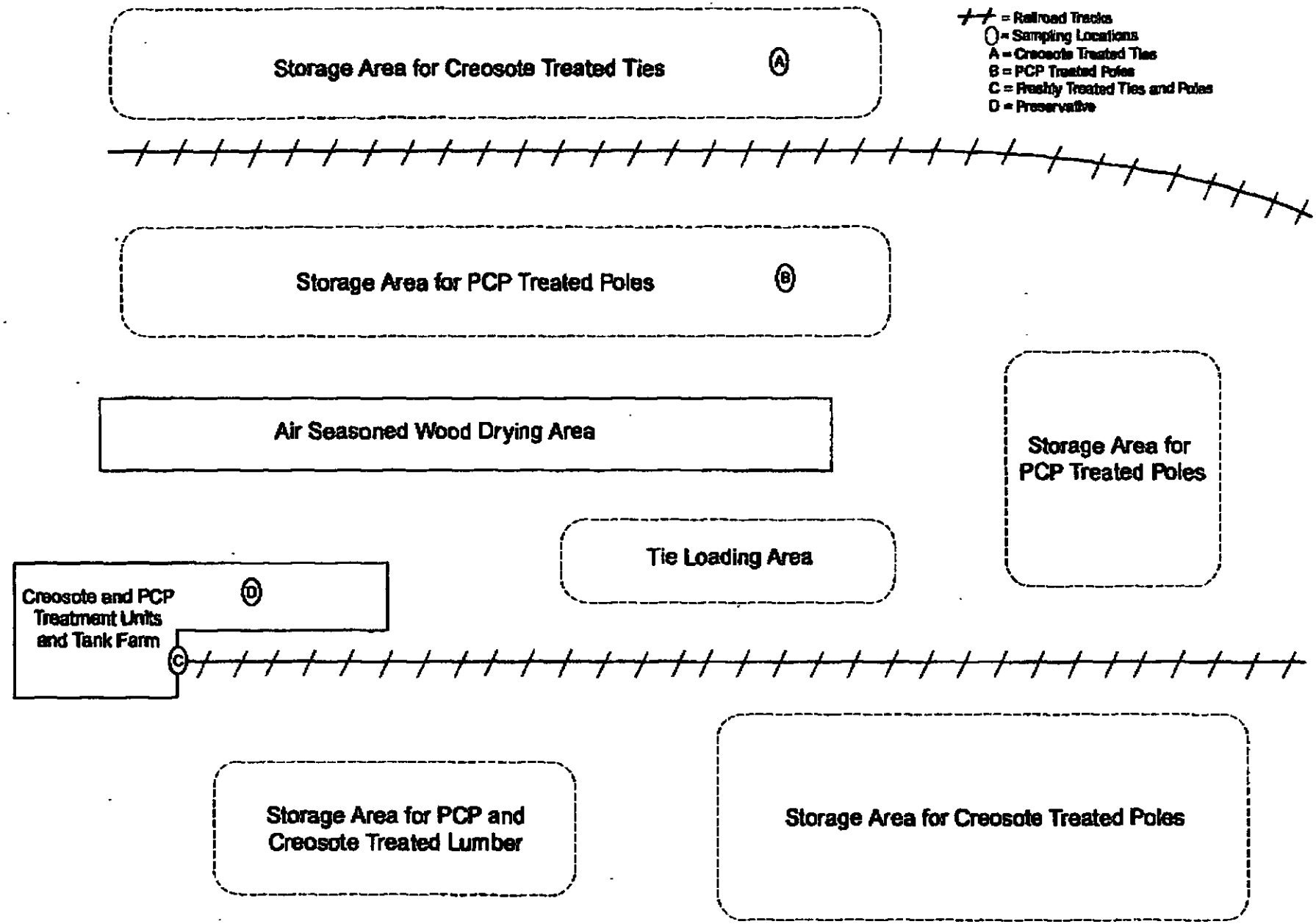

Figure 1. Layout of the treated wood storage area at Koppers Industries, Incorporated in Florence, South Carolina (not drawn to scale).

vapors from the cylinder are condensed in a shell-and-tube condenser located before the vacuum pump, and the condensate is collected in a creosote blowdown tank. Additionally, kiln-dried poles, cross arms, and lumber are steam conditioned for 1 to 2 hours prior to treatment with creosote.

Following conditioning, the Rueping process is used to treat wood with creosote. The cylinder is initially pressurized from 40 to 90 psig for 30 minutes to 1 hour depending on the wood being treated. Creosote is then added to the cylinder and heated. The cylinder is further pressurized to 145 psig, and the pressure is maintained for 1 to 6 hours until the desired product retention is reached. After pressurization, the creosote is drained from the cylinder and returned to the work tank. The draining time lasts approximately thirty minutes. As noted previously, the creosote displaces vapors in the work tank, and the vapors are vented to the atmosphere.

When softwood products are treated with creosote, live steam is injected into the cylinder to clean the wood before removal. The steam condensate is sent from the cylinder to the blowdown tank. A final 25-inch Hg vacuum is then pulled on the cylinder for 2 to 3 hours. Most of the vapors from the cylinder are condensed in a shell-and-tube condenser located before the vacuum pump, and the condensate is collected in a creosote blowdown tank.

B. Pentachlorophenol Process

The KII facility also uses a mixture of PCP and diesel fuel to treat wood. Concentrated 40 percent PCP and diesel fuel solvent are delivered to the plant separately by tank truck or heated rail car. The PCP and diesel fuel are then mixed to a concentration of 7.5 percent PCP by weight in an 8,000 gallon mix tank. The mixture is stored in two 57,200 gallon storage tanks and a 48,900 gallon PCP work tank. The four tanks vent to the atmosphere.

Steaming-and-vacuuming is also used to condition green poles prior to treatment with creosote. The green poles are steamed in the cylinder for approximately 9 hours. After steaming, a water sealed, vacuum pump pulls a 25-inch Hg vacuum on the cylinder for 2 hours. Most of the vapors from the cylinder are condensed in a shell-and-tube condenser located before the vacuum pump, and the condensate is collected in a PCP blowdown tank.

The treatment process used in the PCP unit is similar to the one used in the creosote unit, and following treatment with PCP, the wood is placed under a 25-inch Hg vacuum for 1 to 2 hours. No post treatment steaming is used on PCP treated wood.

C. Treated Wood

After a charge has been treated, it remains on the drip pad until all dripping has stopped. Depending on the type of product and the customer demand, the charge can either be stored at the facility or loaded onto rail cars and shipped to a customer. The KII facility segregates the treated wood storage yard into different sections according to the type of product treated and the type of preservative used. Creosote and PCP treated poles are stored in separate, customer bins, while creosote and PCP treated ties and lumber are restacked after removal from the treating cylinders and stored in a designated area. Figure 1 shows a diagram of the plant layout with the different storage areas noted. Testing will be conducted in the treated wood storage areas noted in Figure 1.

Products with different treating ages compose the inventory of wood maintained on site. All treated products are tagged with the month of treatment, and these tags, along with the facility's treating records, can be used to determine the date of treating. Thus, testing can be conducted on products with a wide range of treating ages.

IV. Test Program

Table 1 presents a sampling and analysis schedule for the requested test program. Figure 1 identifies the approximate sampling locations. Because of the product turnover, the exact sampling points will be identified at the time of testing. Testing of the emissions from the treated wood storage needs to be performed using FTIR technology. Testing needs to be conducted on creosote treated ties and PCP treated poles, because these products represent the majority of wood treated annually with PCP and creosote by the wood treatment industry. Because the emission rate from the treated wood is expected to decrease over time, testing needs to be conducted on products having different treating ages. At a minimum, testing of freshly treated products, as well as products with treating ages of 1, 4, 7, 15, and 30 days is necessary. Products with other treating ages may also be tested if required.

Several components of creosote are hazardous air pollutants (HAP's) and need to be analyzed during testing. The specific HAP's from creosote that are to be tested include but are not limited to the following: naphthalene, dibenzofuran, biphenyl, quinoline, and cresols. Since only two emissions tests have been conducted on the wood treatment storage area, limited data for concentrations of these HAP's are available. One study conducted by Koppers Industries, Incorporated at its facility in Feather River, California measured emissions from creosote treated poles having a wide range of treating ages. The results are shown in

Table 1. Test Matrix for the KII Facility

SOURCE SAMPLING AND ANALYSIS SCHEDULE				Contract Number: 68-D1-0118						Assignment Number: WA-046		
				Company Name: Koppers Industries, Incorporated						Company Location: Florence, South Carolina		
				Industry: Wood Treatment			Process: Wood Treatment					Control Equipment : None
							Initial Analysis			Final Analysis		
Sampling Point Figure 1	Total No. of Samples	Sample Type	Sampling Methods*	Sample Collected By	Minimum Sampling Time	Minimum Volume Sampled	Type	Method	By	Type	Method	By
A	5[1]	Speciated Organics	FTIR	CTR	1 hr	N/A	Speciated Organics	FTIR	CTR			
B	5[2]	Speciated Organics	FTIR	CTR	1 hr	N/A	Speciated Organics	FTIR	CTR			
C	4[3]	Speciated Organics	FTIR	CTR	1 hr	N/A	Speciated Organics	FTIR	CTR			
D	3	Preservative	Top Sampling	CTR	Grab	500 cc				Composition	GC/MS	CTR

CTR = Contractor
GC/MS = Gas Chromatography / Mass Spectrometry
FTIR = Fourier Transform Infrared
N/A = not applicable. Methods are sampled continuously. Thus a minimum volume is not applicable
A = Storage area for creosote treated ties
B = Storage area for PCP treated poles
C = Drip pad for freshly treated wood products
D = Preservative storage and work tanks
[1] Tests are to be conducted on creosote treated ties with treating ages of 1, 4, 7, 15, and 30 days.
[2] Tests are to be conducted on PCP treated poles with treating ages of 1, 4, 7, 15, and 30 days.
* Duplicate tests are to be conducted on freshly treated products.

Table 2.[1] Region IX of the EPA conducted a different study at the same facility. In this study, organic concentrations in the ambient air around the entire treated wood storage area were measured. Resultant concentrations of naphthalene ranged from 8.7 - 34.6 mg/m^3 in this study.[2]

Only PCP needs to be analyzed during FTIR testing of emissions from PCP treated wood. Emissions from PCP treated wood have not been measured in any previous testing. Thus, no range of concentration is available for PCP emissions from this source.

One area of potential difficulty exists in using FTIR to test emissions from creosote and PCP treated wood. At the present time, FTIR spectra have not been developed for all of the HAP's listed previously. Only spectra for naphthalene and the cresols have been developed, while spectra for biphenyl, PCP, dibenzofuran, and quinoline are expected to be developed later this year. However, when the spectra are developed for these HAP's, the FTIR samples can be reanalyzed in order to determine the concentrations of these compounds.[3]

Besides emission testing, the preservatives used at the facility should also be sampled and analyzed. The American Wood Preservers Association defines creosote as a distillate of coal tar with a boiling range of at least 125°C, beginning at about 200°C. As a result, the relative concentration of creosote components can vary. The creosote must be sampled and analyzed during testing to determine the actual concentration of HAP's in the preservative. Accordingly, the PCP and diesel fuel solution should also be sampled and analyzed to determine the amount of PCP in the solution.

V. Relationship of Test Data to Standards Development

The test program will characterize uncontrolled emissions from the wood treatment storage area at PCP and creosote treatment facilities. The uncontrolled emissions will be used to establish baseline emissions from the treated wood storage area.

VI. Coordination

Prior to testing, an RTI representative will maintain close coordination with the facility, ISB, EMB, and the testing contractor to ensure that all testing preparations are completed. RTI will review the test plan to ensure that overall objectives are met. Additionally, a representative of RTI will be present during testing to verify that the correct types of products and that products of the proper treating ages are being tested.

Table 2. Results from Testing of the Treated Wood Storage Area at the KII Facility located in Feather River, California [2]

HAP	Freshly Treated Poles	1 Day	4 Days	7 Days	12 Days	30 Days
Naphthalene (mg/dscm)	17,902	2,196	682.8	452.3	335.8	207.3
Cresols (mg/dscm)	74.6	83.3	90.3	55.4	51.4	52.8

Continued coordination will be required among the EMB project officer, the testing contractor, ISB personnel, and RTI personnel prior to and during the testing. The contact at KII is Mr. Stephen Smith, Environmental Manager, (412) 227-2677.

VII. References

1. McLaren Hart. Emission Inventory Report for the Koppers Industries Corporation: Oroville, California. Prepared for Koppers Industries, Incorporated. Pittsburgh, Pennsylvania. March 1991.

2. Ebasco Services, Incorporated. Final Emission Data Report: Emission Testing Program, Koppers Superfund Site; Oroville, California. Prepared for the U.S. Environmental Protection Agency, Region 9. December 1989.

3. Telecon. Gatano, B. L., Research Triangle Institute, with Lay, L., U.S. Environmental Protection Agency. April 6, 1993. Reference spectra for FTIR testing.

Dallas W. Safriet
3904 Maplefield Drive
Raleigh, N.C. 27612

UNITED STATES ENVIRONMENTAL PROTECTION AGENCY
Office of Air Quality Planning and Standards
Research Triangle Park, North Carolina 27711

23 MAR 1993

MEMORANDUM:

SUBJECT: Emission Test Request for Pacific Wood Preserving, Bakersfield, CA

FROM: James U. Crowder, Chief
Industrial Studies Branch, ESD (MD-13)

TO: Gilbert H. Wood, Chief
Emission Measurement Branch, TSD (MD-19)

This is to request that the Emission Measurement Branch conduct emissions tests at the Pacific Wood Preserving plant in Bakersfield, CA. Emissions tests are to be conducted across three scrubbers which control emissions from various parts of the wood treatment process. The emissions tests will provide a characterization of baseline hazardous air pollutant emissions from creosote wood treatment plants and information on the performance of the control units.

Detailed information on the facility to be tested and a discussion of the emission measurements required are presented in the attached source test request prepared by Research Triangle Institute (RTI). Questions regarding this request should be directed to Eugene Crumpler at (919) 541-0881.

Attachment

cc: Lisa Conner (SDB)
Eugene Crumpler (ISB)
Dallas Safriet (EIB)
Al Vervaert (ISB)

ALLAS

RESEARCH TRIANGLE INSTITUTE

Center for Environmental Analysis

MEMORANDUM

DATE: March 17, 1993

SUBJECT: Recommendation for Emission Testing at Pacific Wood Preserving of Bakersfield, Corporation in Bakersfield, California

EPA Contract 68-D1-0118, WA 45
ESD Project 91/62
RTI Project 5290-045

FROM: Betty Gatano

TO: Eugene Crumpler
OAQPS/ESD/ISB (MD-13)
U.S. Environmental Protection Agency
Research Triangle Park, NC 27711

I. Recommendation

Conduct simultaneous inlet and outlet emission testing for total organic carbon and speciated organics from the three water scrubbers at the Pacific Wood Preserving of Bakersfield, Corporation (PWPB) facility in Bakersfield, California.

II. Basis for Selection

The PWPB facility was selected for emission testing because it represents the most thoroughly controlled wood treatment facility in the country. Most facilities do little to control emissions, and at the few facilities that do employ air pollution control devices (APCD's), the extent of emissions control is usually limited to scrubbers or condensers on work tanks or vacuum system exhausts. At the PWPB facility, separate water scrubbers control emissions from both the vacuum system exhaust and the creosote work tank. Additionally, a hooding and water scrubber system is used to capture and control air emissions from the cylinder door opening at the PWPB facility. No other facility in the country has a capture and control system on the cylinder door. Therefore, emission testing at the PWPB facility

Post Office Box 12194 Research Triangle Park, North Carolina 27709-2194
Telephone: 919 990-8603 Fax: 919 990-8600

would serve to establish baseline emissions for creosote wood treatment processes. The water scrubbers used at the PWPB facility may represent maximum achievable control technology (MACT) for the industry, and testing would also establish the potential for emissions reduction for the industry MACT.

III. Facility Description

The creosote wood treatment process at the PWPB facility began operating in 1985. The process contains a treating cylinder; six, fixed-roof storage tanks; a vacuum pump, a shell and tube condenser, and an accumulation tank; two pressure pumps; a shell and tube heat exchanger; and a natural gas fired boiler. The process is capable of treating 702,000 cubic feet of wood per year, but it is presently operating at approximately 20 percent of its maximum capacity due to the loss of one of its major customers. The plant currently operates 1 shift per day, 3 to 5 days per week. However, the reduced work week and capacity are not expected to affect emissions testing, because the same volume of wood is treated per charge at maximum and minimum capacity. Figure 1 shows the layout of the creosote treatment process and its associated APCD's.

The treating solution used at the PWPB facility is a mixture of bunker oil and creosote. The creosote and oil are delivered to the plant separately by rail car and stored in two 20,304 gallon storage tanks. Before being used in the treatment process, the creosote is diluted with the oil to a working concentration of 30 percent creosote by weight in a 36,480 gallon work tank.

The Boulton process is used to condition green wood prior to treatment at the PWPB facility. Initially, the creosote treating cylinder is filled with just enough preservative to immerse the green wood. The total filling time lasts approximately thirty minutes. After being added to the cylinder, the preservative is circulated through a heat exchanger for approximately 2 hours until the cylinder reaches a temperature of 200°F. A 12 to 15" Hg vacuum is then pulled on the cylinder to lower the boiling point of water in the wood, causing part of the water to evaporate. The vacuum is maintained for 6 to 8 hours depending on the type of wood being conditioned.

After the wood has been conditioned, the treatment process begins. The PWPB facility uses the empty cell method to treat the wood. In this process the vacuum is broken, and a brief period of initial air pressure is applied to the cylinder. Pressurization continues until a cylinder pressure of 100 psig is reached. Pressure is maintained for 1 to 3 hours depending on the type of wood being treated and the specification of the final product. After pressurization, the preservative is drained from

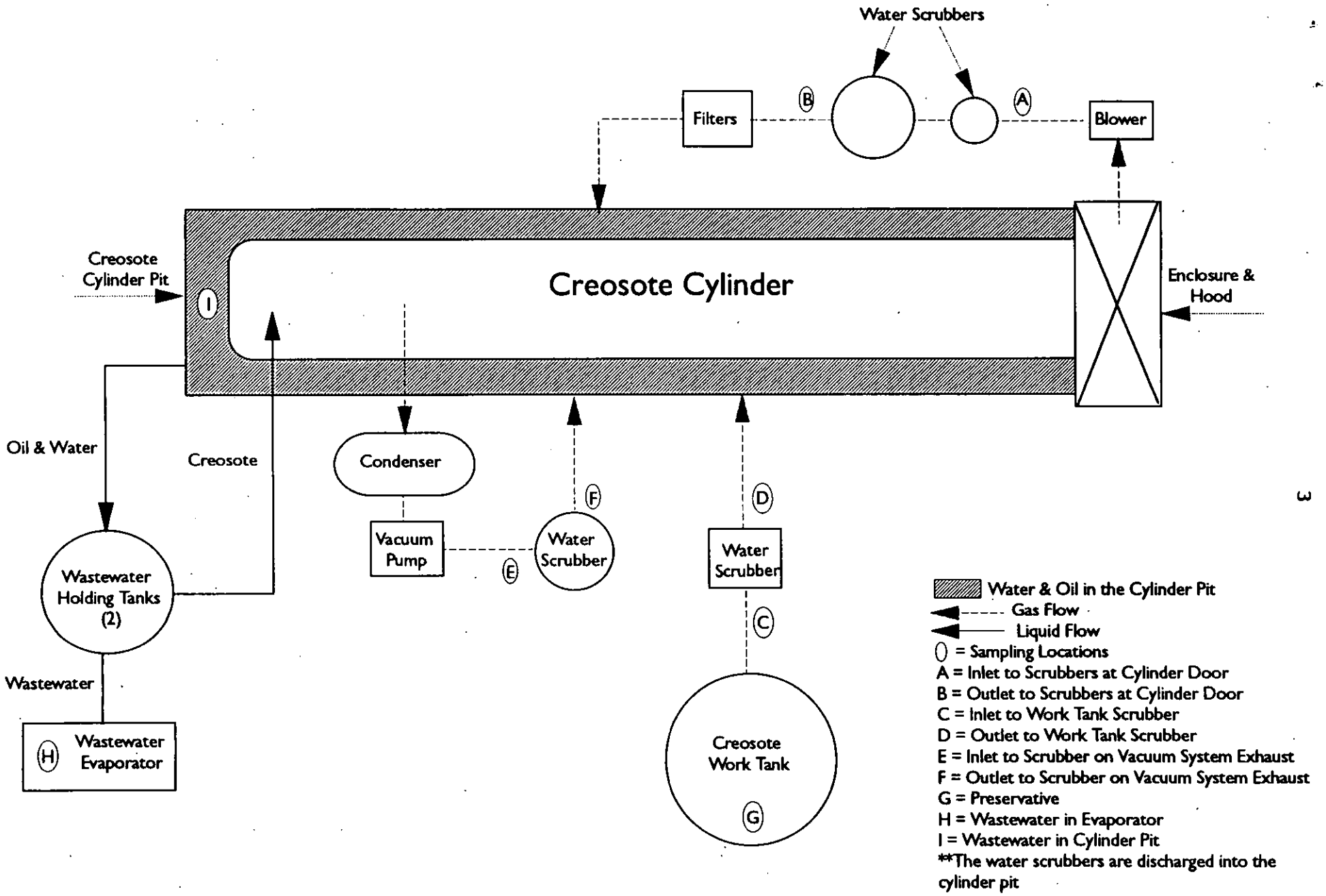

Figure 1. Layout and sampling locations for the PWPB facility in Bakersfield, California

the cylinder and returned to the work tank. The total draining time lasts approximately thirty minutes. A final 22" Hg vacuum is then pulled on the cylinder for at least 2 hours.

At this point the treating process is completed, and the charge can be removed from the cylinder without affecting the quality of the product. However, the San Joaquin Valley Unified Air Pollution Control District (SJVUAPCD) requires that the temperature of the creosote cylinder at PWPB be less than 120°F before the cylinder can be opened and the charge removed. As a result, the PWPB facility leaves the cylinder sealed under a 22" Hg vacuum for approximately 12 hours or until the cylinder temperature decreases to 120°F. This procedure is unique to the PWPB facility. For the emission test, the cylinder door must be opened immediately after treatment so that the emissions sampled during testing will be representative of those from other wood treatment processes. This process modification will require a temporary permit variance from the SJVUAPCD.

At the PWPB facility, water scrubbers are used to control emissions from several sources in the creosote unit. All of the water scrubbers were installed to eliminate the odor associated with the creosote treatment and to prevent odor complaints from residents of Bakersfield, neighbors of the facility, or others. Each water scrubber was designed and constructed by the facility staff and is operated only at certain times during the treating cycle. Because of the batch nature of the treatment process, the simplicity of design of the scrubbers, and the lack of emission test data on these scrubbers, operational parameters such as pressure drop across the scrubbers and water flow rates are unknown. These parameters will be measured during the proposed source test.

A hood and water scrubber at the cylinder door capture and control emissions from the cylinder door opening. The hood is housed in a wooden enclosure with a plastic screen across the front of the enclosure. When the temperature in the cylinder reaches 120°F, the cylinder is opened 6 inches, and the screen is pulled across the enclosure opening. A blower pulls the vapors emitted from the cylinder into an Eco-Sorb tank. Water and a liquid deodorizer in the Eco-Sorb tank condense the vapors emitted from the cylinder. Uncondensed vapors from the first tank enter a second, larger Eco-Sorb tank where the vapors are again contacted with water. Any vapors not condensed in the second tank are sent through a series of 5 micron filters and then discharged into a cylinder pit located underneath the treating cylinder. The system runs for 1 to 2 hours.

Water scrubbers are also located on the creosote work tank and the vacuum system exhaust. When preservative is returned from the cylinder to the work tank after treatment, a condition

called blow back is created. During blow back, air in equilibrium with the preservative in the work tank is displaced. A water scrubber on the work tank vent controls emissions during work tank blow back. When a vacuum is pulled on the cylinder, a condenser and condensate tank located before the vacuum pump eliminate many of the emissions from the cylinder. Instead of being vented to the atmosphere, the noncondensables from the vacuum pump exhaust are sent through a water scrubber. As noted above operational parameters for these scrubbers are unknown but will be measured during testing.

Figure 1 identifies the location of the sample points. All of the APCD's are easily accessible for testing. All three scrubbers are at or near ground level, and no equipment, machinery or other material prevents access to the scrubbers. Although the scrubbers were not designed or constructed to accommodate emissions testing, sample ports can be drilled into the duct work and piping on the inlet and outlet of each scrubber. The necessary modifications can be made easily by the facility or the contractor prior to testing.

IV. Test Program

Table 1 presents a sampling and analysis schedule for the requested test program. Figure 1 identifies sampling locations at the inlet and outlet of each water scrubber. Tests on the inlets need to be performed using EPA Modified Method 5 for speciated organics and Method 25A for total organic carbon. Tests on the outlets need to be performed using only Method 25A for total organic carbon. Sampling at the inlet and outlet of each scrubber needs to be conducted simultaneously, and a minimum of three sample runs is required at each sample location. Because the creosote treating process is a batch operation that lasts from 8 to 24 hours, testing must be conducted over a period of 2 to 3 days in order to collect the recommended number of samples. Previous emission testing of the wood treatment industry is limited, and an emission test conducted at the PWPB facility may represent the only accurate measurement of emissions for the industry. Therefore, three sample runs are necessary for the accurate measurements required to establish baseline emissions.

Several components of creosote are hazardous air pollutants (HAP's) and need to be analyzed during testing. The specific HAP's to be tested include but are not limited to the following: naphthalene, dibenzofuran, biphenyl, and cresol's. Since only a few emissions tests have been conducted at wood treatment facilities, only limited data for concentrations of these HAP's are available. The results of a study conducted at the Koppers Industries, Incorporated facility in Susequehanna, Pennsylvania indicate that naphthalene concentrations in the vacuum system exhaust range from 6.65 to 32.1 mg/m3 and dibenzofuran

Table 1. Test Matrix for PWPB Facility

SOURCE SAMPLING AND ANALYSIS SCHEDULE													
	Contract Number: 68-D1-0118									Assignment Number: WA-045			
	Company Name: Pacific Wood Preserving of Bakersfield, Corporation									Company Location: Bakersfield, California			
	Industry: Wood Treatment					Process: Wood Treatment						Control Equipment : Water Scrubber	
Sampling Point Figure 1	Total No. of Samples	Sample Type	Sampling Methods [a]	Sample Collected By	Minimum Sampling Time	Minimum Volume Sampled	Initial Analysis			Final Analysis			
							Type	Method	By	Type	Method	By	
A, E	3	TOC	25A	CTR	1 hr	N/A	TOC	25 A	CTR				
		Speciated Organics	MM5	CTR			Speciated Organics	MM5	CTR	Speciated Organics	GC/MS	CTR	
B, F	3	TOC	25A	CTR	1 hr	N/A	TOC	25A	CTR				
C	3	TOC	25A	CTR	0.5 hr [b]	N/A	TOC	25A	CTR				
		Speciated Organics	MM5	CTR			Speciated Organics	MM5	CTR	Speciated Organics	GC/MS	CTR	
D	3	TOC	25A	CTR	0.5 hr [b]	N/A	TOC	25A	CTR	TOC	25A	CTR	
G	3	Preservative	Tap Sampling	CTR	Grab	500cc				Composition	GC/MS	CTR	
H, I	1	Wastewater in cylinder pit and evaporator	Tap Sampling	CTR	Grab	500cc	pH	Standard Methods 423	CTR	Concentration of Organics in Wastewater	GC/MS	CTR	
							Temperature		CTR				

TOC = Total Organic Carbon
CTR = Contractor
GC/MS = Gas Chromatography / Mass Spectroscopy
MM5 = Modified Method 5
N/A = not applicable. Methods are sampled continuously. Thus a minimum volume is not applicable
[a] Methods are EPA unless indicated otherwise.
[b] A blow back occurs for a maximum of thirty minutes per cycle.

A = Inlet to Scrubbers at Cylinder Door
B = Outlet to Scrubbers at Cylinder Door
C = Inlet to Work Tank Scrubber
D = Outlet to Work Tank Scrubber
E = Inlet to Scrubber on Vacuum System Exhaust
F = Outlet to Scrubber on Vacuum System Exhaust
G = Preservative
H = Wastewater in Evaporator
I = Wastewater in Cylinder Pit

concentrations range from 1.29 to 15.7 mg/m3.[1] Additionally, the results of a different study conducted at the Pacific Sound Resources facility in Bainbridge, Washington indicate that naphthalene concentrations in the fugitives from the cylinder door opening range from 29.3 to 219 ppm. No concentrations of other HAP's were reported in this study.[2] Emissions from the work tank have not been measured in the previous testing. Thus, no range of concentrations is available for work tank emissions.

The wood treatment process will also be monitored during testing. The time, temperature, and pressure of each stage of the treatment and conditioning process will be monitored and recorded. Additionally, the type of wood to be treated, the product retention, the total volume of the charge, and the amount of preservative consumed will also be recorded for each charge treated during testing.

In addition to the emission testing, the creosote and oil solution should also be sampled. The American Wood Preservers Association defines creosote as a distillate of coal tar with a boiling range of at least 125°C, beginning at about 200°C. As a result, the relative concentration of creosote components can vary. The creosote and oil solution must be sampled and analyzed during testing to determine the actual concentration of HAP's in the preservative.

During testing, samples of the wastewater in the cylinder pit and the evaporator should also be collected and analyzed. The concentration of HAP's in the wastewater can be used to estimate emissions from the wastewater treatment system.

V. Relationship of Test Data to Standards Development

The test program will characterize uncontrolled emissions from a wood treatment process and will demonstrate the performance capability of water scrubbers used to control these emissions. The uncontrolled emissions will be used to establish baseline emissions from creosote treatment facilities.

VI. Coordination

Prior to testing, an RTI representative will maintain close coordination with the facility, ISB, EMB, and the testing contractor to ensure that all sampling preparations are completed. RTI will review the test plan to ensure that overall objectives are met.

During testing, a representative of RTI will monitor the wood treatment process and the water scrubbers to ensure that the systems are operating properly. Testing may occur only while the process and the emissions control devices are operating at normal conditions.

Continued coordination will be required among the EMB project officer, the testing contractor, ISB personnel, and RTI personnel prior to and during the testing. To ensure that all necessary duct work modifications are made at the facility and that the required test conditions can be achieved, coordination with the facility and the local pollution control agency is also critical. The contacts at the facility are Mr. Don Baize, Plant Superintendent, and Mr. Don Danka, Plant Manager, (805) 833-0429. The contact at the San Joaquin Valley Unified Air Pollution Control District is Mr. Cliff Calderwood, Compliance Officer, (805) 861-3682.

cc: Wally Sanford
Al Vervaert

VII. References

1. Keystone Environmental Resources, Incorporated. Vacuum Pump Emissions Study Assisting in SARA Title III Form R Reporting. Prepared for Koppers Industries, Incorporated. Pittsburgh, Pennsylvania. August 1990.

2. Engineering-Science. Emissions Test Report Air Toxic Sampling at Wyckoff, Incorporated Bainbridge Island, Washington. Prepared for the U.S. Environmental Protection Agency, Region 10. Seattle, Washington. EPA 910/9-86-149. March 1986.

Rick
mchinshaw

UNITED STATES ENVIRONMENTAL PROTECTION AGENCY
Office of Air Quality Planning and Standards
Research Triangle Park, North Carolina 27711

08 MAR 1993

MEMORANDUM

SUBJECT: Review of AP-42 Section on Wood Preserving Facilities

FROM: Eugene P. Crumpler, Environmental Engineer
Industrial Studies Branch (MD-13)

TO: Dallas W. Safriet
Emission Factor and Methodologies Section (MD-14)

I have reviewed the above draft for inclusion in AP-42. The chapter is well written and represents the industry as we in ISB understand it to be. However, the emissions factors presented are derived from a single source test which our investigation reveals to be flawed. We have obtained some additional test work that our analysis indicates is more reliable. I have attached a copy of a summary of the test work at wood treatment facilities prepared by our contractor RTI which should be of interest. I will be glad to assist you in obtaining these reports.

Our current plans for testing include a test of all point sources at a creosote facility in Bakersfield, CA. The Bakersfield plant was identified in our information collection request activity completed in December 1992, as the best controlled creosote treatment plant currently in operation. In addition, we plan to test the emissions from a creosote treated storage pile as we suspect that large storage piles may be the largest source of HAPs.

Call me at 1-0881 to discuss the testing work further and to obtain the additional test reports.

cc: Jim Crowder, ISB

0881

RESEARCH TRIANGLE INSTITUTE

Center for Environmental Analysis

MEMORANDUM

DATE: December 4, 1992

SUBJECT: Revised Source Assessment
Wood Treatment NESHAP
EPA Contract 68-D1-0118
RTI Project 5290-045

Telephone 990-8612

FROM: Betty Gatano

TO: Eugene Crumpler
OAQPS/ESD/ISB (MD-13)
U. S. Environmental Protection Agency
Research Triangle Park, NC 27711

1.0 PURPOSE

The purpose of this document is to assess the origin, type, and quantity of the emissions from wood treatment facilities. The source assessment will be accomplished by identifying the types and sources of HAP emissions from wood treatment facilities and by quantifying these emissions based on past testing of the wood treatment industry.

2.0 BACKGROUND

The 1990 Clean Air Act Amendments (CAAA) calls for the Environmental Protection Agency (EPA) to develop Maximum Achievable Control Technology (MACT) standards for plants which are major sources of any of the 189 HAP's listed in Section 112b. Major sources are defined as facilities producing at least 10 tons per year of any one HAP or 25 tons per year of any combination of HAP's. MACT standards require that existing major sources achieve an emission limitation at least as stringent as the "average emission limitation achieved by the best performing 12 percent of the existing sources" for source categories having more than 30 facilities. MACT standards also require that new major sources achieve an emission limitation at least as stringent as that achieved by the "best controlled similar source."

Post Office Box 12194 Research Triangle Park, North Carolina 27709-2194
Telephone: 919 990-8603 Fax: 919 990-8600

The wood treatment source category includes any facility engaged in the treatment of wood products with organic preservatives. Wood treatment or preservation is the pressure or thermal impregnation of chemicals into wood to a depth that will provide effective long term resistance to attack by fungi, insects, and marine borers. The most common chemicals used for treating wood are creosote, PCP, and arsenical salts, although arsenicals wood treaters have been eliminated from MACT standards development. By extending the service life of available timber through treatment with these chemicals, wood preservation reduces the demands on forestry resources, reduces operating costs in industries such as utilities and railroads, and helps to ensure safe working conditions where timbers are used as support structures.

The most recent statistics for the wood treatment industry indicate that 584 wood treatment plants were active in the United States in 1988, with another 3 inactive during that year. Of this total, 567 were pressure treaters and 19 were nonpressure treaters. Approximately 89 percent of all pressure-treating plants used only one type of preservative, while the other 11 percent used a combination of two or more preservatives. Of the 567 pressure treaters, 484 plants treated wood with waterborne preservatives, 97 plants treated with creosote solutions, and 77 plants treated with PCP. As noted above, the water-borne facilities are exempt from MACT development.

Wood preservatives can be segregated into three general classes; creosote and creosote solutions, oil-borne preservatives, and water-borne preservatives. Different HAP's are associated with each class, and Table 1 summarizes some of the HAP's emitted from wood treatment facilities. Of the HAP's listed in Table 1, naphthalene is expected to be emitted in the greatest quantity. As noted previously, processes using water-borne preservatives are exempt from MACT standards development. Therefore, HAP's associated with these processes are not included in Table 1.

The wood treatment process usually involves first removing moisture from the wood and then treating the wood with preservative. Moisture removal can be accomplished by allowing the wood to air season or by using artificial conditioning. The most common methods of artificial conditioning include steaming-and-vacuum, boiling under vacuum, vapor drying, and kiln drying. After conditioning either by natural or artificial methods, the wood is then treated with preservative. Although treatment processes differ in details, most are carried out in large steel cylinders built to withstand pressures up to 250 psi. Typically, wood is loaded into a cylinder, which is then closed and filled with preservative. Pressure is applied to the cylinder until the

desired amount of preservative has been absorbed by the wood. After the pressure is released, the cylinder is drained, and a final vacuum is applied to the cylinder.

TABLE 1. HAP'S EMITTED FROM THE WOOD TREATMENT INDUSTRY

HAP'S	Associated Chemical
Cresol Naphthalene Dibenzofuran Quinoline Biphenyl Benzene Toluene POM Others	Creosote and Creosote Solutions
Pentachlorophenol Benzene Methylene Chloride Others	Oil-borne Preservatives
Xylene Others	Solvents Used for Vapor Drying

3.0 EMISSION SOURCES AT WOOD TREATMENT FACILITIES

Volatile organic compounds (VOC) and semi-volatile organic compounds (SVOC) occur in the wood treatment industry as both stack and fugitive emissions. Stack emissions include emissions from the work tanks and the vacuum system exhaust, while fugitive emissions include emissions from the cylinder door opening, the treated wood storage area, and the wastewater treatment facility. Table 2 summarizes the sources of emissions from wood treatment facilities.

TABLE 2. EMISSION SOURCES AT WOOD TREATMENT FACILITIES

DESCRIPTION OF EMISSION SOURCE	SOURCE TYPE
Wood Fired Boiler	Stack
Preservative Unloading	Fugitive
Preservative Work Tank	Stack
Preservative Storage Tank	Stack
Vacuum System Exhaust	Stack
Cylinder Door Opening	Fugitive
Treated Wood Storage Area	Fugitive
Wastewater Treatment System Sumps Oil & Water Separators Biological or Chemical Treatment Evaporators	Fugitive
Pumps, Valves, Flanges	Fugitive

4.0 QUANTIFYING EMISSIONS FROM EACH SOURCE

Although air emission testing at wood treatment industry is not widespread, several emission test studies have been conducted over the past decade. The studies are listed in the references of this document. The following sections use the results of the various tests to quantify emissions from the wood treatment industry.

4.1 Wood Fired Boiler

Some wood treatment facilities burn treated wood for fuel in wood fired boilers, and these facilities must obtain air permits from their state. For the Koppers Industries, Incorporated facility in Florence, South Carolina, results of the 1991 compliance test of their wood fired boiler indicate that only minimal HAP's are emitted under worst case conditions (i.e. when only treated wood is burned). Specifically, 19 lbs of Lead, 6.0 lbs of Arsenic, 6.77 lbs of Chromium, 1.40 pounds of Cadmium, 1.32 lbs of Nickel, and 894 pounds of HCL were emitted from the boiler in that year under these conditions.[1] Additionally, the Florence site is

one of the largest wood treatment facilities in the country and emissions from average facilities will probably be less than these emissions.

4.2 Work Tanks

In addition to normal working and breathing losses, wood treatment work tanks are subject to preservative blow back. A blow back event occurs when the preservative is sent back to the work tank after conditioning or treatment. As a result, air in equilibrium with the preservative in the work tank is displaced.

In 1989, EPA Region IX conducted a study that quantified emissions from all the sources at the Koppers Industries, Incorporated facility in Oroville, California. As a result, emissions from a creosote work tank at the facility were tested. In the test, samples were taken during the blow back period and during the final steam cycle. The final steam cycle involved heating the treated product by direct contact with pressurized steam for one hour. The emissions from the steam cycle were returned to the work tank and vented in the same manner as the blow back vapors. The results of the emission test are summarized in Table 3.[2]

Table 3. Emissions from Work Tank[2]

HAP's	Blow Back (lb/yr)	Steam Cycle (lb/yr)	Total Emissions (lb/yr)
Benzene	5.5	121	126.5
Toluene	6.2	135	141.2
Cresols	4.2	51.7	55.9
Naphthalene	69.5	1531.2	1600.7

As noted in Table 3, emissions from the steaming cycle are much higher than normal blow back. However, not all wood treatment facilities steam their products after treatment. The frequency of post treatment steaming in the industry cannot be determined until the results of the Information Collection Request (ICR) are analyzed. As a result, the above emission rate may not be applicable to the majority of the industry.

4.3 Vacuum Exhaust

Vacuum systems usually consist of a condenser and a condensate receiver followed by a vacuum pump or a steam jet ejector. Often a single vacuum system serves several treating cylinders, with the treating cycle in each cylinder staggered to prevent delays. Most emissions from wood treatment vacuum systems occur during wood conditioning and final vacuuming.

As part of EPA Region IX testing noted previously, emissions from the vacuum exhaust at the wood treatment facility in California were quantified. In the test, samples were taken during conditioning (Boultonizing) and during the final vacuum cycle of a cylinder that is used in creosote treatment. The results of the emission test are presented in Table 4.[2]

Table 4. Emissions from Vacuum System Exhaust[2]

HAP's	Boultonizing (lb/yr)	Final Vacuum (lb/yr)	Total Emissions (lb/yr)
Benzene	1.76	0.88	2.64
Toluene	1.98	0.88	2.86
Cresols	0.44	0.44	0.88
Naphthalene	18.5	84.5	103

In addition to the Region IX tests, at least two other emission tests have been conducted on the vacuum exhaust at other wood treatment facilities. One of the tests, which was conducted by Koppers Industries, Incorporated at their Susquehanna, Pennsylvania site, resulted in emissions comparable to those of the Region IX test.[3] The other test, conducted by EPA Region X at the Wyckoff facility in Seattle, Washington, indicated much higher emissions. For example, naphthalene emissions from the vacuum exhaust were approximately 17,000 lbs per year per cylinder at the Wyckoff facility.[4]

No reason for the disparity between the three tests is apparent. For all three tests, emission sampling was conducted by EPA approved methods. Additionally, the facilities that were tested had similar treatment and conditioning methods, and the processes temperatures and pressures at each facility were approximately the same. The

most notable difference was that the Wyckoff facility had a much longer Boulton cycle than the other two facilities. Although a longer cycle may result in more pounds of HAP emitted per year, the hourly emission rates should be similar. However, the hourly rate at the Wyckoff facility was much higher than at the other facilities.

4.4 Treated Wood Storage

For creosote facilities, emissions from treated wood immediately after removal from the retort usually exceed 60 percent opacity beyond the opaque water vapor breakoff point and continue to exceed 40 percent opacity for up to 20 minutes. Heat from the treated charge causes some of the lower boiling organic compounds to volatilize as aerosols, forming a dense white emission plume. Emissions of 60 percent opacity or more beyond the opaque steam plume from the open end of the retort continue throughout the time it takes to remove the treated wood and recharge the retort.

Two emission tests were conducted that measured fugitive emissions associated with the treated wood. In the EPA Region X test at the Wyckoff facility, emissions were measured at the open end of a creosote cylinder during treated wood removal.[4] Additionally, emissions from the treated wood storage area were estimated in the Region IX test using ambient air monitoring and modeling. The results are presented in Table 5. According to the results, emissions from the treated wood storage area are the largest source of HAP's from wood treatment facilities.[2]

Table 5. Emissions from Treated Wood Storage Area and Cylinder

HAP's	Cylinder Fugitives[4] (lb/yr)	Treated Wood Storage[2] (lb/yr)	Total Emissions (lb/yr)
Cresols	unknown	427	427
Naphthalene	366	20,900	21,266

* In the Region X test conducted at the Wyckoff facility, fugitive emissions from a PCP treatment cylinder were also measured. According to the results of this test, approximately, 28 lbs per year of PCP were emitted. These results were not included in Table 5 because the Region IX test measured emissions from a treated wood storage area at a facility that used creosote and not PCP.

4.5 Wastewater Treatment System

Wastewater treatment systems for processes that use creosote or oil-borne preservatives often include some or all of the following equipment: oil-water separators, flocculation tanks, and thermal evaporator pans or biological treatment tanks.

Only limited data is available on emissions from wastewater treatment systems at wood treatment facilities. One of the most significant sources of emissions from wastewater treatment systems appears to be from thermal pan evaporators which are used to concentrate creosote and oil-borne preservatives. A study by the EPA's Office of Research and Development tested emissions from thermal pan evaporators. Emission results from this study are summarized in Table 6. Additionally, Table 6 also contains results of emission estimates from the Region IX study at the Koppers site in California. The study estimated air emissions from the wastewater treatment system at the facility by the measuring organic concentration in the wastewater and entering the results into an emission equation.

Table 6. Emissions from Wastewater Treatment System

HAP's	Wastewater Treatment System[2] (lb/yr)	Thermal Pan Evaporator[5] (ppm)*	
		Creosote Process	Penta Process
Benzene	1.49	--	<5
Toluene	0.36	--	<5
Cresols	0.02	--	--
Naphthalene	0.93	2,500	2,000
Penta	--	2	10,000
Phenol	--	30	200

* These values represent the average concentration of three emissions tests. Because of the wide variation in emissions rates and concentrations observed during testing (e.g. <2 to 11,300 g/h and 0 to 52,000 ppm), a yearly mass emission cannot be established.

Not all wood treatment facilities use thermal pan evaporators in their wastewater treatment system. The frequency of use in the industry cannot be determined until

the results of the ICR are analyzed. As a result, the above emissions from thermal pan evaporators may not be applicable to the majority of the industry.

4.6 Other Sources of Fugitive Emissions

In addition to fugitive emissions from the wastewater treatment system and the treated wood storage area, other sources of fugitive emissions include preservative unloading and pumps, valves, and flanges. Emissions from these sources were estimated in the EPA Region IX study. The results are presented in Table 7. However, the amounts are conservative estimates and are likely to be higher than in actuality.

Table 7. Fugitive Emissions[2]

HAP's	Unloading (lb/yr)	Pumps, Valves, and Flanges (lb/yr)	Total Emissions (lb/yr)
Benzene	1.34	57.1	58.4
Toluene	1.50	53.5	55
Cresols	1.10	998	999
Naphthalene	0.51	324	324.5

5.0 TYPICAL CONTROLS

Industry contacts and the initial responses to the wood treatment industry ICR indicate that little has been done to control air emissions from wood treatment facilities, and most wood treatment facilities have no air pollution controls of any kind. However, some plants have limited controls. The most prevalent air pollution control devices (APCD's) in the industry appear to be scrubbers or equalization lines on the work tanks. These controls eliminate HAP's from being emitted during work tank blow back. Additionally, condensers or scrubbers are also likely to be used on the vacuum system exhaust. However, since the majority of ICR responses have not yet been received, the actual number and type of APCD's and the extent of their use in the industry cannot be determined at this time. Table 8. summarizes the controls that are likely to be found in the wood treatment industry, but the use of APCD's at wood treatment facilities are not limited to those listed in Table 8.

TABLE 8. AIR POLLUTION CONTROL DEVICES EXPECTED TO BE FOUND IN THE INDUSTRY

SOURCE OF HAP EMISSION	APCD OR PROCEDURAL CHANGE
Work and Storage Tanks	Water Scrubbers or Equalization Lines
Vacuum System Exhaust	Condenser or Water Scrubber
Fugitive Emissions from the retort door opening and the treated wood	Extended Final Vacuum

6.0 SUMMARY

A few air emissions studies have been conducted at wood treatment facilities across the country over the past decade. The results of some of these studies were used to quantify emissions which are presented in Table 9. As seen Table 9, emissions from treated wood storage areas are the largest sources of emissions from wood treatment facilities. In fact, testing indicates that such emissions are at the major source level. Additionally, although some wood treatment facilities employ APCD's, the emission studies cited in the reference of this document do not address emission controls. Thus, the effectiveness of any of the APCD's have not been quantified in these studies.

Table 9 represents emissions from a wood treatment process that uses creosote. A similar table cannot be constructed for PCP because not enough testing has been conducted on PCP treatment units and the tests that have been conducted may be inaccurate. The majority of the emission testing listed in the references focused on emissions from processes that use creosote. Few of the test reports focused on PCP emissions. Thus, emissions from creosote treatment units can be better categorized than emissions from PCP units. The few tests on PCP emissions were conducted at facilities that had both PCP and creosote treatment units. The results of these tests indicate that cross contamination between the PCP and the creosote units may have taken place. Therefore, the emissions from PCP processes may be inaccurate.

cc: Al Vervaert
Wally Sanford

Table 9. Total Emissions by Source (lb/yr)
(Creosote Treatment Only)

HAP's	Work Tank* (1)	Total Vacuum Emissions* (3)	Cylinder Fugitives* (1)	Treated Wood (1)	Wastewater Treatment** (3)	Other Fugitives (1)	Total
Benzene	126.5 P	2.64 P	--	--	1.49 P	58.4 P	189.03
Toluene	141.5 P	2.86 P	--	--	0.36 P	55 P	199.7
Cresol	55.9 M	0.88 M	--	427 M	0.02 P	999 P	1482.8
Naphthalene	1600.7 M	103 M	366 M	21,266 M	0.93 P	324.5 P	23,661
Total	**1924.6**	**109.4**	**366 M**	**21,693 M**	**2.8 P**	**1436.7 P**	**25,533**

Notes:
* Based on emissions from one cylinder that treats wood with creosote.
** Emissions from thermal pan evaporators not included in the table because the flow rates and concentrations from the evaporators were so variable during testing that mass emissions could not be estimated.
"M" indicates that the listed value was based on stack measurements
"P" indicates that the listed value was predicted or estimated
The numbers in parenthesis indicate the number of emissions test reports.
The emissions above were compiled from testing conduct at different test sites, and thus the totals may not represent any single site.

7.0 REFERENCES

1. ATEC Associates, Incorporated. Compliance Emission Testing: Koppers Industries, Wood Fired Boiler. Prepared for Koppers Industries, Incorporated. Florence, South Carolina. October 1991.

2. Ebasco Services, Incorporated. Final Emission Data Report: Emission Testing Program, Koppers Superfund Site; Oroville, California. Prepared for the U.S. Environmental Protection Agency, Region 9. December 1989.

3. Keystone Environmental Resources, Incorporated. Vacuum Pump Emissions Study Assisting in SARA Title III Form R Reporting. Prepared for Koppers Industries, Incorporated. Pittsburgh, Pennsylvania. August 1990.

4. Engineering-Science. Emissions Test Report Air Toxic Sampling at Wyckoff, Incorporated Bainbridge Island, Washington. Prepared for the U.S. Environmental Protection Agency, Region 10. Seattle, Washington. EPA 910/9-86-149. March 1986.

5. Acurex Corporation. Wood Preserving Industry Multimedia Emission Inventory. Prepared for the U.S. Environmental Protection Agency. Cincinnati, Ohio. EPA 600/2-81-066. April 1981.

6. Acurex Corporation. Emissions and Residue Values From Waste Disposal During Wood Preserving. Prepared for the U.S. Environmental Protection Agency. Cincinnati, Ohio. EPA 600/2-82-062. April 1982.

7. Engineering-Science. Determination of Air Toxic Emissions from Non-Traditional Source in the Puget Sound Region. Prepared for the U.S. Environmental Protection Agency, Region 10. Seattle, Washington. EPA 910/9-86-148. April 1986.

8. Keystone Environmental Resources, Incorporated. Preliminary Draft of the Montana Pole Remedial Investigation Report. Helena, Montana. April 1991.

UNITED STATES ENVIRONMENTAL PROTECTION AGENCY
Office of Air Quality Planning and Standards
Research Triangle Park, North Carolina 27711

Jim — Action
Bob — Please review and brief me on impact on Emb resources and schedule.
Thks, GA 6/28

JUN 2 2 1993

Dallas

MEMORANDUM:

SUBJECT: Emission Test Request for Burke-Parson-Bowlby - Du Bois, Pennsylvania

FROM: James U. Crowder, Chief
Industrial Studies Branch, ESD (MD-13)

TO: Gilbert H. Wood, Chief
Emission Measurement Branch, TSD (MD-19)

This is to request that the Emission Measurement Branch conduct emissions tests at the Burke-Parson-Bowlby wood treatment plant in Du Bois, PA. Emissions tests are to be conducted across a scrubber which controls emissions from various parts of the wood treatment process. The emissions tests will provide a characterization of overall emissions from creosote wood treatment plants and information on the performance of the control unit.

Detailed information on the facility to be tested and a discussion of the emission measurements required are presented in the attached source test request prepared by Research Triangle Institute (RTI). Questions regarding this request should be directed to Eugene Crumpler at (919) 541-0881.

Attachment

cc: Lisa Conner (SDB)
Eugene Crumpler (ISB)
Dallas Safriet (EIB)
Al Vervaert (ISB)

RESEARCH TRIANGLE INSTITUTE

Center for Environmental Analysis

MEMORANDUM

DATE: June 22, 1993

SUBJECT: Recommendation for Emission Testing at Burke-Parsons-Bowlby, Corporation in Du Bois, Pennsylvania

EPA Contract 68-D1-0118, WA 45
ESD Project 91/62
RTI Project 5290-045

FROM: Betty Gatano

TO: Eugene Crumpler
OAQPS/ESD/ISB (MD-13)
U.S. Environmental Protection Agency
Research Triangle Park, NC 27711

I. Recommendation

Conduct simultaneous inlet and outlet emission testing for total organic carbon and speciated organics from the water scrubber at the Burke-Parsons-Bowlby, Corporation (BPB) facility in Du Bois, Pennsylvania.

II. Basis for Selection

The BPB facility has an aqueous scrubber that controls emissions from the vacuum system exhaust, the creosote work and storage tanks, and the wastewater treatment system. This facility was selected for testing for two reasons. First, the facility has small collection hoods over each of its three treatment cylinder. The hoods are not currently being used to collect fugitive emissions from the cylinders. However, they can be used during testing in order to collect and measure the fugitive emissions. Second, the aqueous scrubber represents the most common air pollution control device (APCD) used in the wood treatment industry. Seven wood treatment facilities use water scrubbers to control emissions. Of these seven, three facilities use packed-bed scrubbers, and four use spray scrubbers. Thus, aqueous scrubbers may represent maximum achievable control technology (MACT) for existing sources. As a result, testing at this facility would serve to establish baseline emissions for creosote wood treatment processes and may establish the potential for emissions reduction for the industry MACT.

Post Office Box 12194 Research Triangle Park, North Carolina 27709-2194
Telephone: 919 990-8603 Fax: 919 990-8600

III. Facility Description

The BPB facility, located in Du Bois, Pennsylvania uses creosote to treat railroad ties, crossing timber, and bridge timber made from oak and hardwoods. In 1991, the facility treated roughly 1.4 million cubic feet of wood products and consumed 850,000 gallons of creosote. The facility operates three treatment cylinders for conditioning and treating wood. Each cylinder has an associated condenser, work tank, and vacuum pump. One cylinder measures 7.5 feet in diameter by 62 feet in length, and the other two measure 7 feet in diameter by 48 feet in length. The creosote facility operates 24 hours per day, 7 days per week. Figure 1 shows the layout of the creosote treatment process and its associated APCD's.

The treating solution used at the BPB facility is a 60/40 creosote coal tar mixture and is called P2 creosote. The P2 solution is delivered to the plant by rail car and stored in two 18,000 gallon and one 20,000 gallon storage tanks.

The facility either uses air seasoned wood or it conditions wood by the Boulton method prior to treatment. Air seasoning takes months before the wood can be treated, while Boultonizing the wood takes from 6 to 18 hours. Because of the current wood shortage facing the wood treatment industry, the facility cannot afford to have a large amount of inventory being air seasoned. As a result the facility is now Boultonizing a larger percentage of wood. For example, the facility's goal is to treat 50 to 60 percent air seasoned wood, but because of the wood shortage, only about 15 percent of the wood treated is air seasoned.

The Boulton process is used to condition green wood prior to treatment at the BPB facility. Initially, the creosote treating cylinder is filled with just enough preservative to immerse the green wood. The total filling time lasts approximately thirty minutes. The creosote is heated to approximately 180°F. A 20" Hg vacuum is then pulled on the cylinder to lower the boiling point of water in the wood, causing part of the water to evaporate. Vapors from the cylinder are condensed in a shell-and tube-condenser, and the condensate collects in the work tank. The vacuum is maintained for 10 to 20 hours depending on the type of wood being conditioned. The average length of the vacuum lasts for 15 hours.

After the wood has been conditioned, the treatment process begins. The BPB facility uses the Rueping method to treat the wood. In this process, the vacuum is broken and the creosote in the cylinder is returned to the storage tank. A brief period of initial air pressure of 30 psig is applied to the cylinder. The cylinder is then filled with creosote while the pressure on the

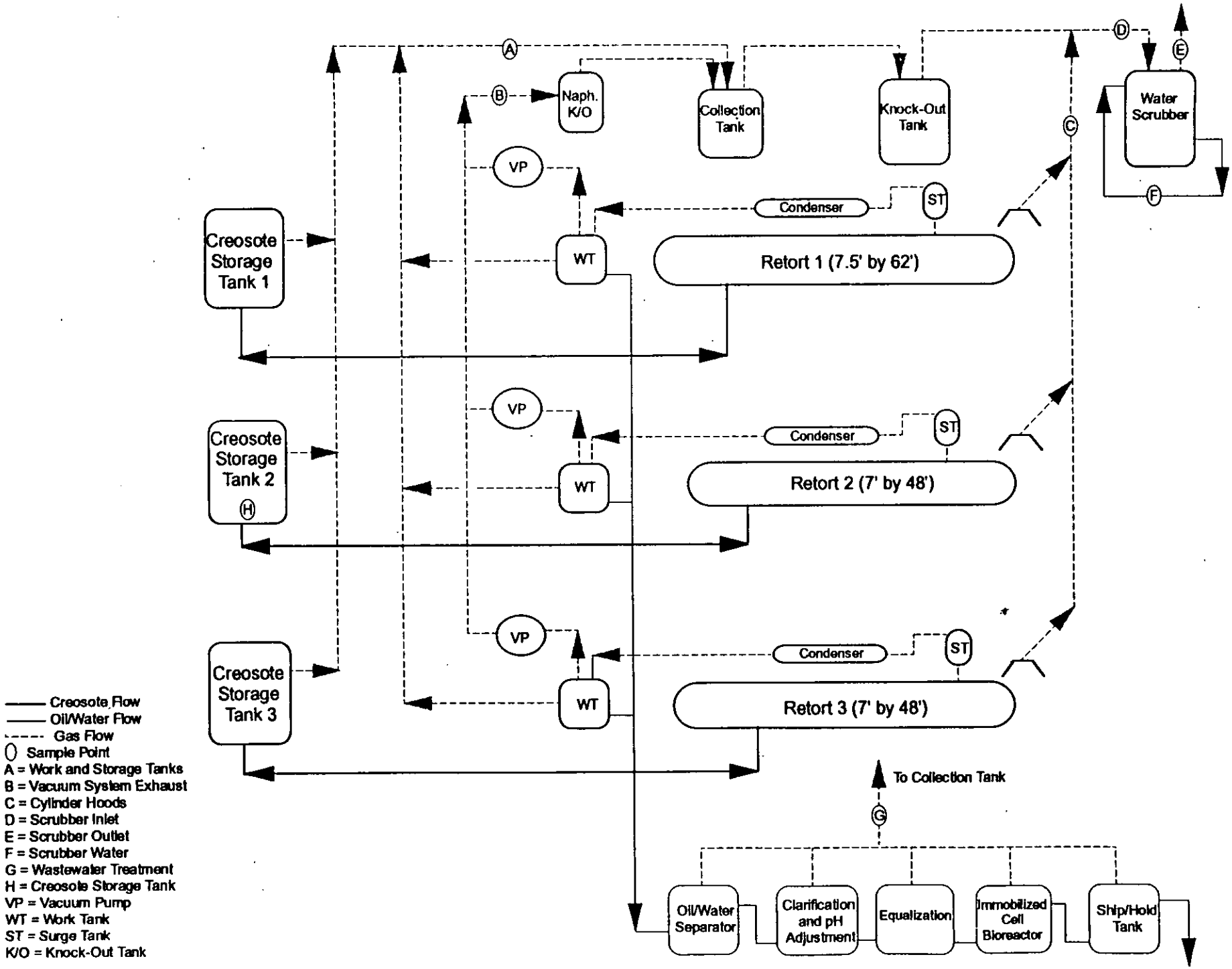

Figure 1. Layout and sampling locations for the BPB facility in DuBois, Pennsylvania (not drawn scale)

cylinder is maintained. Once filling is complete, pressurization continues until the cylinder pressure reaches 180 psig. Pressure is maintained for 1 to 3 hours depending on the type of wood being treated and the specification of the final product. The pressure on the cylinder is then released to the creosote work tank, and the preservative is drained from the cylinder and returned to the creosote storage tank. The total draining time lasts approximately thirty minutes. A final 20" Hg vacuum is then pulled on the cylinder for at least 1 hour. Any residual creosote that is released from the wood during the final vacuum is returned to the storage tank. Following this step, the cylinder is opened, and the charge is removed.

The facility controls emissions from process work and storage tanks, the vacuum system exhaust, and the wastewater treatment system with several pieces of equipment. Noncondensables from the vacuum system exhaust are initially sent to a naphthalene knock-out tank. Naphthalene collects in this tank, and the water in the tank is changed approximately once per day. Vapors from the naphthalene knock-out tank, along with displaced air in equilibrium with the creosote in the storage tank, and emissions from the wastewater treatment system are sent to a collection tank. From the collection tank, vapors are vented to a knock-out tank. Finally, a "low flow" blower is used to pull the vapors from the knock out tank through the water scrubber. Any vapors not condensed in the scrubber are released to the atmosphere.

The water scrubber is a Croll-Reynolds venturi jet scrubber, which was installed in 1991. The scrubber was sized to handle 2,000 ACFM of vapor and a flow rate of 95 gpm of recirculated water. The total capacity of the scrubber is 280 gallons, and treated wastewater is used in the scrubber. Currently, only about 250 ACFM of the scrubbers capacity is used by process emissions. The other 1,750 ACFM results from the collection hoods installed above each cylinder door. Each hood measures 2 by 5 feet and has an associated capture velocity of 210 feet per minute. However, the hoods are not currently used because the large air flow associated with them makes the scrubber ineffective. For this reason, the facility's operating permit from the Commonwealth of Pennsylvania states that the facility cannot operate the hoods. Ordinarily, a permit variance would be required before testing on the hoods can be conducted. However, the Regional Manager for the Pennsylvania Department of Environmental Resources waived the need for the permit variance, and testing can be conducted without the variance.[1]

Figure 1 identifies the locations of the sample points. All sampling ports are easily accessible for testing. Testing has been conducted on the facility in the past. Thus, some of the sample ports may already be present. Any other ports can be

drilled into the process duct work and piping. The necessary modifications can be made easily by the facility or the testing contractor prior to emission test.

IV. Test Program

Figure 2 presents the maximum creosote process cycle at the BPB facility and the timing of the proposed emissions tests that will be conducted on that process. As shown in Figure 2, the timing of the emissions tests at the storage tank, the vacuum system exhaust, and the cylinder door are designed to sample emissions from the following events:

- Emissions from the 20 hour Boulton cycle;
- Emissions from the 1 hour final vacuum after treatment;
- Emissions from storage tank during blow back; and
- Emissions from the cylinder door opening.

However, the times noted in Figure 2 for the Boulton cycle are subject to change. Prior to beginning the test schedule noted in Table 1, a total hydrocarbon analyzer will be used to monitor an entire creosote cycle to ensure that the times of peak emissions occurring during the Boulton cycle will be tested. Thus, these times may be different than the sample times noted in Figure 2.

Table 1 presents a sampling and analysis schedule for the requested test program that will test emissions during each process event noted previously. Figure 1 identifies inlet sampling locations at the creosote work and storage tanks, the vacuum system exhaust, and the wastewater treatment system. Figure 1 also identifies the sampling point located at the outlet of the water scrubber. Tests on the vacuum system exhaust and the storage tanks need to be performed using EPA Modified Method 5 for speciated organics and Method 25A for total organic carbon. Only Method 25A needs to be performed on the wastewater treatment system because only a small amount of emissions is expected from this source. Tests at the water scrubber inlet and outlet also need to be performed using Method 25A for total organic carbon, and sampling at the inlet and outlet of the scrubber needs to be conducted simultaneously. Additionally, a minimum of three sample runs is required at each sample location and for each process event in order to ensure the accuracy of the data. Previous emission testing of the wood treatment industry is limited, and an emission test conducted at the BPB facility may represent the only accurate measurement of emissions for the industry. Therefore, three sample runs are necessary for the accurate measurements required to establish baseline emissions.

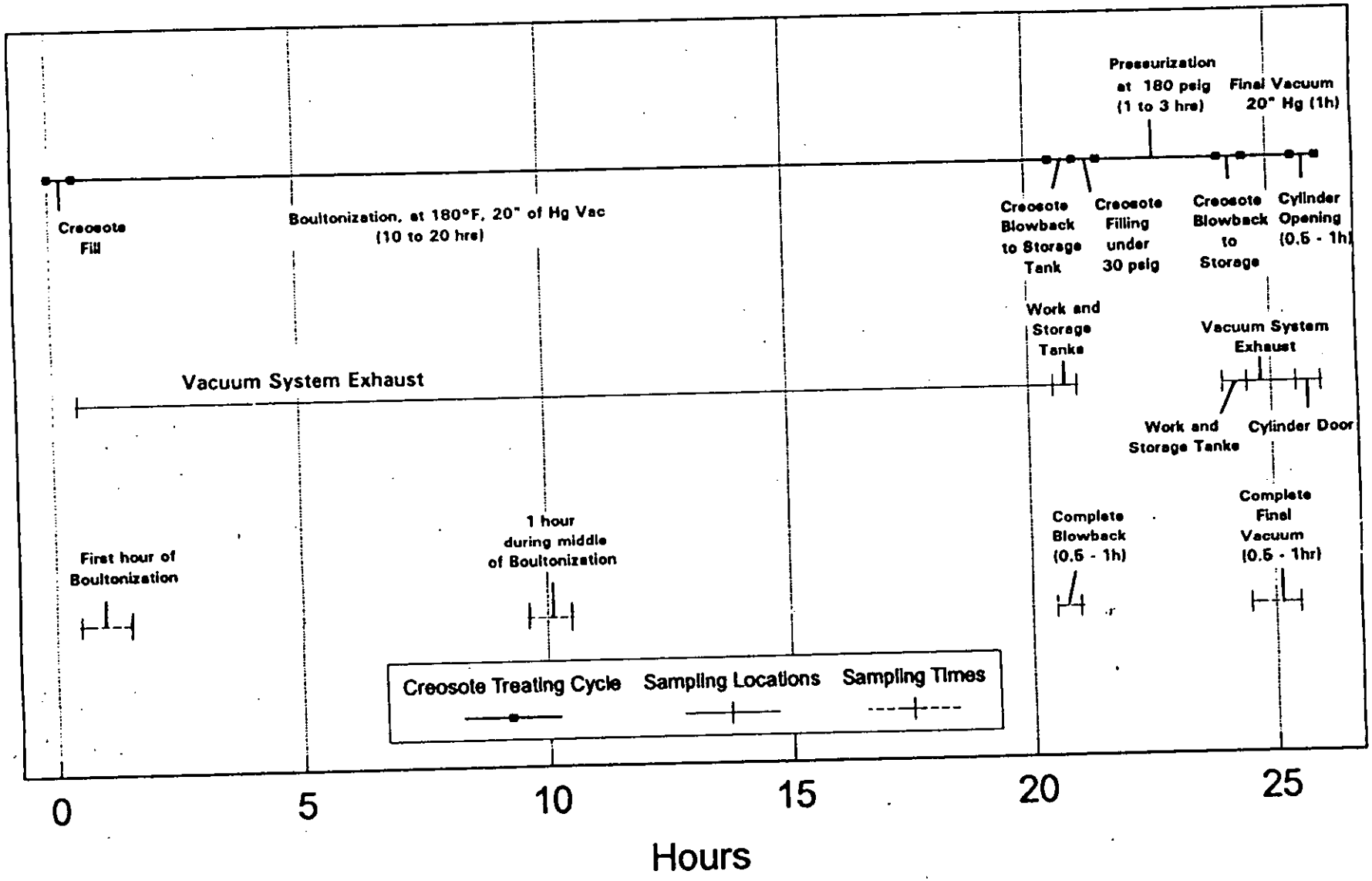

Figure 2. Creosote Treating Cycle at BPB

Table 1. Test Matrix for the BPB Facility

SOURCE SAMPLING AND ANALYSIS SCHEDULE													
		Contract Number: 68-D1-0113								Assignment Number: WA-045			
		Company Name: Burlington-Furnace-Bowley, Corporation								Company Location: DuBois, Pennsylvania			
		Industry: Wood Treatment					Process: Wood Treatment					Control Equipment : Water Scrubber	
							Initial Analysis			Final Analysis			
Sampling Point Figure 1	Total No. of Samples	Sample Type	Sampling Methods [a]	Sample Collected By	Minimum Sampling Time	Minimum Volume Sampled	Type	Method	By	Type	Method	By
A	3	TOC	25A	CTR	Cont	N/A	TOC	25 A	CTR			
		Speciated Organics	MM5		0.5-1 hr [b]		Speciated Organics	MM5	CTR	Speciated Organics	GC/MS	CTR
B	9	TOC	25A	CTR	Cont	N/A	TOC	25 A	CTR			
		Speciated Organics	MM5		1 hr		Speciated Organics	MM5	CTR	Speciated Organics	GC/MS	CTR
C	3	TOC	25A	CTR	Cont	N/A	TOC	25 A	CTR			
D, E	12	TOC	25A	CTR	Cont	N/A	TOC	25 A	CTR			
F	3	Water in Scrubber	Tap Sampling	CTR	Grab	500 cc	pH	Standard Methods 423	CTR	Conc. of Organ. in Scrubber Water	GC/MS	CTR
							Temperature		CTR			
G	3	TOC	25A	CTR	Cont	N/A	TOC	25A	CTR			
H	3	Preservative	Tap Sampling	CTR	Grab	500 cc				Composition	GC/MS	CTR

TOC = Total Organic Carbon
CTR = Contractor
CONT = Capable of Continuous Sampling
GC/MS = Gas Chromatography / Mass Spectroscopy
MM5 = Modified Method 5
N/A = not applicable. Methods are sampled continuously. Thus a minimum volume is not applicable
[a] Methods are EPA unless indicated otherwise.
[b] A blow back lasts from thirty minutes to one hour per cycle.
[c] The cylinder door opening lasts from thirty minutes to one hour per cycle.

A = Work and Storage Tanks
B = Vacuum System Exhaust
C = Cylinder Hoods
D = Scrubber Inlet
E = Scrubber Outlet
F = Scrubber Water
G = Wastewater Treatment
H = Creosote Storage Tank

Several components of creosote are hazardous air pollutants (HAP's) and need to be analyzed during testing. The specific HAP's to be tested include but are not limited to the following: naphthalene, dibenzofuran, biphenyl, quinoline, xylenes, cresol's, and other polycyclic organic matter. Table 2 shows typical compositions of creosote and coal tar.[2] Since only a few emissions tests have been conducted at wood treatment facilities, only limited data for concentrations of these HAP's are available. The results of a study conducted at the Koppers Industries, Incorporated facility in Susequehanna, Pennsylvania indicate that naphthalene concentrations in the vacuum system exhaust range from 6.65 to 32.1 mg/m3 and dibenzofuran concentrations range from 1.29 to 15.7 mg/m3.[3] Additionally, the results of a different study conducted at the Pacific Sound Resources facility in Bainbridge, Washington indicate that naphthalene concentrations in the fugitives from the cylinder door opening range from 29.3 to 219 ppm.[4]

In addition, a previous emission test has been conducted at the BPB facility. The test measured the efficiency of the scrubber using EPA Method 25A for total hydrocarbons. In this test, the average efficiency of the scrubber was 91.6 $\pm$ 5.3 percent. The maximum and minimum efficiencies were 83.2 percent and 97.6 percent.

The efficiency of the scrubber will be determined by measuring the total organic carbon (Method 25A) at the scrubber's inlet and outlet. Since high organic content in the scrubber water may influence the scrubber efficiency, the scrubber water should be sampled before and after each test run to avoid misleading values for the scrubber efficiencies. If possible during testing, scrubber water having a range of organic concentrations should be used in order to measure the effect of organic concentration of scrubber water on the efficiency.

In addition to the emission testing, the creosote solution should also be sampled. The American Wood Preservers Association defines creosote as a distillate of coal tar with a boiling range of at least 125°C, beginning at about 200°C. As a result, the relative concentration of creosote components can vary. Table 2 lists typical values for creosote and coal tar, but the actual creosote used at the facility may differ in composition than the creosote listed in Table 2. Thus, the creosote solution must be sampled and analyzed during testing to determine the actual concentration of HAP's in the preservative.

During testing, samples of the wastewater should also be collected and analyzed. The wastewater should be sampled just before the water enters the wastewater treatment system. The concentration of HAP's in the wastewater can be used to estimate emissions from the wastewater treatment system.

Table 2. Typical Compositions of Creosote and Coal Tar

Major Components	Raw Creosote[a] Range	Raw Creosote[a] Average	High Temperature Coal Tars[a]
	(Percent)	(Percent)	(Percent)
Acenaphthene	9 - 14.7	10.9	NDA
Anthracene	2 - 7	4.5	1.5
Benz(a)anthracene	0.16 - 0.26	0.26	0.65
Benzo(a)pyrene	0.04 - 0.06	0.06	0.55
Benzofluorenes	1.0 - 2.0	1.5	NDA
Biphenyl	0.8 - 1.6	1.1	NDA
Carbazole	1.2 - 2.0	1.6	0.6
Chrysene	2.6 - 3.0	2.8	1.1
Dibenz(a,h)anthracene	0.01 - 0.04	0.04	0.10
Dibenzofuran	4.0 - 7.5	5.5	NDA
Dimethylnaphthalenes	2.0 - 2.3	2.15	NDA
Fluoranthene	0.5 - 10	6.9	3.3
Fluorene	7.3 - 10	8.8	NDA
Methylanthracenes	3.9 - 4.0	3.9	NDA
Methylfluorenes	2.3 - 3.0	2.7	NDA
1-Methylnaphthalene	0.9 - 12	4.9	NDA
2-Methylnaphthalene	1.2 - 12	5.3	NDA
Methylphenanthrenes	3.0	3.0	NDA
Naphthalene	1.3 - 18	7.4	10
Phenanthrene	16 - 21	18.1	5
Pyrene	1.0 - 8.5	5.5	2.1

[a]IARC Monographs, Volume 35, "Coal Tar and Derived Products."

The wood treatment process will also be monitored during testing. The time, temperature, and pressure of each stage of the treatment and conditioning process will be monitored and recorded. Additionally, the type of wood to be treated, the product retention, the total volume of the charge, and the amount of preservative consumed will also be recorded for each charge treated during testing.

In order to ensure that the emissions from one creosote cycle are measured accurately, a single treating cylinder needs to be isolated. In this way, emissions resulting from process events occurring in other cylinders will not obscure the test results. Isolating a single cylinder may require modifications to the process, and the modifications must be made by the facility prior to testing.

V. Relationship of Test Data to Standards Development

The test program will characterize uncontrolled emissions from a wood treatment process and will demonstrate the performance capability of water scrubbers used to control these emissions. The uncontrolled emissions will be used to establish baseline emissions from creosote treatment facilities.

VI. Coordination

Prior to testing, an RTI representative will maintain close coordination with the facility, ISB, EMB, and the testing contractor to ensure that all sampling preparations are completed. RTI will review the test plan to ensure that overall objectives are met.

During testing, a representative of RTI will monitor the wood treatment process and the water scrubber to ensure that the system is operating properly. Testing may occur only while the process and the emissions control device are operating at normal conditions.

Continued coordination will be required among the EMB project officer, the testing contractor, ISB personnel, and RTI personnel prior to and during the testing. To ensure that all necessary process modifications are made at the facility and that the requested test conditions can be achieved, coordination with the facility is required. The contact at the facility is Mr. Henry Bressler, Plant Manager, (814) 371-7331. The contact at the Pennsylvania Department of Environmental Resources is Mr. Joe Cooper, Regional Manager, (717) 323-3637.

VII. References

1. Telecon. Gatano, B. L., Research Triangle Institute, with Cooper J., Pennsylvania Department of Environmental Resources. June 1, 1993. Variance for BPB.

2. Radian Corporation. Background Document Supporting the Final Listing of Wastes from Wood Preservation Processes. Prepared for the U.S. Environmental Protection Agency. Washington, D.C. November 1990.

3. Keystone Environmental Resources, Incorporated. Vacuum Pump Emissions Study Assisting in SARA Title III Form R Reporting. Prepared for Koppers Industries, Incorporated. Pittsburgh, Pennsylvania. August 1990.

4. Engineering-Science. Emissions Test Report Air Toxic Sampling at Wyckoff, Incorporated Bainbridge Island, Washington. Prepared for the U.S. Environmental Protection Agency, Region 10. Seattle, Washington. EPA 910/9-86-149. March 1986.

FAX TRANSMISSION

TO: Dallas Safriet, EFIG

FROM: Rick Marinshaw, MRI

DATE: June 26, 1995

RECEIVING FAX NUMBER: 541-0684

SENDING FAX NUMBER: 919-677-0065

THIS FAX CONSISTS OF 3 PAGES (INCLUDING THIS PAGE)

As we discussed a few weeks ago, I am faxing you a list of the references we have on hand for the wood preserving section. The first ten are listed according to their reference numbers in Chapter 4 of the background report. After each title, I have included some comments. We used only References 3 and 10 in the draft AP-42 section. Based on the information provided by the American Wood Preservers Institute (AWPI), the data for Reference 3 are not valid and should not be used for emission factors. You had mentioned that the test on the Burke-Parson-Bowlby plant in DuBois, PA was not valid because the creosote used was not good. In addition, although the data for the Kerr-McGee plant in Avoca, PA are supposed to be valid, the test reports indicates that the test runs were not completed. That report also is labeled as "Draft." So that data also appear to be questionable. That leaves us with one additional report (for the Koppers Susquehanna plant). You also mentioned that we might be receiving one additional report.

I think it would be helpful if we could obtain a copy of the Background Information Document or whatever summary reports that ESD prepared on this source category for the MACT standard. It may be worth contacting AWPI to see if they know of any other test reports we could use.

Please give me a call so that we can discuss this.

AP-42 SECTION 10.7, WOOD PRESERVING
DOCUMENTS REVIEWED FOR THE PREVIOUS DRAFT BACKGROUND REPORT

1. C. C. Vaught and R. L. Nicholson, Evaluation of Emission Sources from Creosote Wood Treatment Operations, EPA-450/3-89-028, U. S. Environmental Protection Agency, Research Triangle Park, NC, June 1989.
   - Not used; does not contain original test data; includes mass balance estimates only.

2. B. DaRos, et al., Emissions and Residue Values from Waste Disposal During Wood Preserving, prepared by Acurex Corporation, EPA-600/2-82-062, U. S. Environmental Protection Agency, Cincinnati, OH, April 1982.
   - Not used: does not specify emission rates and large fluctuations in exhaust flowrates precluded calculation of emission rates.

3. Emission Test Report, Air Toxics Sampling at Wyckoff, Inc., Bainbridge Island, Washington, prepared by Engineering Science, EPA-910/9-86-149, U. S. Environmental Protection Agency, March 1986.
   - Used, but AWPI states that data are not representative and should not be used.

4. Report of Emissions Test: Koppers Industries Wood Fired Boiler, Florence, SC, prepared for Koppers Industries, by ATEC Associates, Inc., October 8, 1991.
   - Not used: test not conducted on wood preserving source.

5. Non-criteria Pollutant Emissions Calculations for Koppers Industries, Salem, VA, prepared for Koppers Industries, by ETS, Inc., June 17, 1991.
   - Not used; presents only emission estimates based on data from another facility.

6. Assessment of the Fume Scrubber Operational Performance at Burke-Parsons-Bowlby, Dubois, PA, prepared for Burke-Parsons-Bowlby, by Allied-Signal, Inc., Environmental Systems, May 1992.
   - Not used; insufficient data to calculate emission factor.

7. Determination of Air Toxic Emissions from Non-traditional Sources in the Puget Sound Region, EPA-910/9-86-148, U. S. Environmental Protection Agency, Region X and Puget Sound Air Pollution Control Agency, Seattle, WA, by Engineering-Science, Inc., April 1986.
   - Not used; insufficient data to calculate emission factor.

8. Engineering Calculation of Pentachlorophenol Air Emissions at Wood Preserving Facilities, prepared for Vulcan Chemicals, Birmingham, AL, by H.M. Rollins Company, Inc., August 31, 1992.
   - Not used; presents only engineering estimates of emissions, does not include test data.

9. Results of the September 1991 Air Emission Compliance Test on the Pole Treatment Facility at the Bell Lumber and Pole Plant in New Brighton, Minnesota, prepared for Bell Lumber and Pole Company, by Interpoll Laboratories, Inc., October 24, 1991.
   - Not used; insufficient data to calculate emission factor.

10. Final Emission Data Report: Emission Testing Program at Koppers Superfund Site, Oroville, California, prepared for U. S. Environmental Protection Agency, Region IX, by Ebasco Services Incorporated, December 1989.
   - Used.

ADDITIONAL REFERENCES

Koppers Industries, Inc., Pittsburgh, Pennsylvania, Susquehanna Wood Treating Facilities, Vacuum Pump Emissions Study, Chester Environmental, Pittsburg, Pennsylvania, April 1994.
- Data appear to be complete and of acceptable quality.

Draft Emissions Test Report, Kerr-McGee Chemical Corporation, Forest Products Division, Wood Treatment Plant, Avoca, Pennsylvania, Science Applications International Corporation, Beaverton, OR, December 1993.
- Problem with creosote used; data not considered representative; report not finalized.

Draft Emissions Test Report, Burke-Parson-Bowlby Corporation, DuBois Division, Wood Treatment Plant, DuBois, Pennsylvania, Science Applications International Corporation, Beaverton, OR, November 1993.
- Sampling at both inlet and outlet of incinerator, but due to inadequate sampling equipment, none of runs represent complete emissions cycle; gasket seal failure during second run; report not finalized.

FAX TRANSMISSION

TO: Dallas Safriet, EFIG

FROM: Rick Marinshaw, MRI

DATE: June 5, 1995

Room 1028

RECEIVING FAX NUMBER: 541-0684

SENDING FAX NUMBER: 919-677-0065

THIS FAX CONSISTS OF 3 PAGES (INCLUDING THIS PAGE)

As we discussed this morning, I am faxing you the list of references in the files for wood preserving. (Note that they are numbered as they appear in the background report rather than the AP-42 section.) As you can see from the references on industry statistics, the data are at least 7 years old; ESD must have more current information on number of plants and plant locations.

As for the references for emission data, a total of 13 are listed. Of these, the first ten were addressed in the most recent draft of the section, and only two (References 3 [Wyckoff] and 10 [Koppers, Oroville]) were used to develop emission factors for the most recent draft of the section. One of those (Reference 3) is highly suspect, and the industry is strongly opposed to its use. The remaining three references are new, but as you informed me last week, one of those (Reference 11--BPB DuBois) cannot be used because of creosote contamination.

REFERENCES FOR AP-42 SECTION 10.8, WOOD PRESERVING

INDUSTRY STATISTICS

1. C. C. Vaught and R. L. Nicholson, *Evaluation of Emission Sources from Creosote Wood Treatment Operations*, EPA-450/3-89-028, U. S. Environmental Protection Agency, Research Triangle Park, NC, June 1989.

2. J. T. Micklewright, "Wood Preservation Statistics, 1988: A Report to the Wood-Preserving Industry in the United States," presented at the Eighty-sixth annual meeting of the American Wood-Preservers' Association, Nashville, TN, April 30-May 2, 1990.

3. *American Wood-Preservers' Association Standards*, 1991.

EMISSIONS DATA/ TEST REPORTS FOR WOOD PRESERVING

1. C. C. Vaught and R. L. Nicholson, *Evaluation of Emission Sources from Creosote Wood Treatment Operations*, EPA-450/3-89-028, U. S. Environmental Protection Agency, Research Triangle Park, NC, June 1989.

2. B. DaRos, et al., *Emissions and Residue Values from Waste Disposal During Wood Preserving*, prepared by Acurex Corporation, EPA-600/2-82-062, U. S. Environmental Protection Agency, Cincinnati, OH, April 1982.

3. *Emission Test Report, Air Toxics Sampling at Wyckoff, Inc., Bainbridge Island, Washington*, Engineering Science, EPA-910/9-86-149, U. S. Environmental Protection Agency, March 1986.

4. *Report of Emissions Test: Koppers Industries Wood Fired Boiler, Florence, SC*, prepared for Koppers Industries, by ATEC Associates, Inc., October 8, 1991.

5. *Non-criteria Pollutant Emissions Calculations for Koppers Industries, Salem, VA*, prepared for Koppers Industries, by ETS, Inc., June 17, 1991.

6. *Assessment of the Fume Scrubber Operational Performance at Burke-Parsons-Bowlby, Dubois, PA*, prepared for Burke-Parsons-Bowlby, by Allied-Signal, Inc., Environmental Systems, May 1992.

7. *Determination of Air Toxic Emissions from Non-traditional Sources in the Puget Sound Region*, EPA-910/9-86-148, U. S. Environmental Protection Agency, Region X and Puget Sound Air Pollution Control Agency, Seattle, WA, by Engineering-Science, Inc., April 1986.

Bill Sheridan
Allied Signal
Chemicals
708-391-3222

8. *Engineering Calculation of Pentachlorophenol Air Emissions at Wood Preserving Facilities*, prepared for Vulcan Chemicals, Birmingham, AL, by H.M. Rollins Company, Inc., August 31, 1992.

9. *Results of the September 1991 Air Emission Compliance Test on the Pole Treatment Facility at the Bell Lumber and Pole Plant in New Brighton, Minnesota*, prepared for Bell Lumber and Pole Company, by Interpoll Laboratories, Inc., October 24, 1991.

10. *Final Emission Data Report: Emission Testing Program at Koppers Superfund Site, Oroville, CA*, prepared for U. S. Environmental Protection Agency, Region IX, by Ebasco Services Incorporated, December 1989.

11. *Draft Emissions Test Report: Burke-Parson-Bowlby Corporation, DuBois Division, Wood Treatment Plant, DuBois, Pennsylvania*, Science Applications International Corporation, Beaverton, Oregon, November 1993.

12. *Draft Emissions Test Report: Kerr-McGee Chemical Corporation, Forest Products Division, Wood Treatment Plant, Avoca, Pennsylvania*, Science Applications International Corporation, Beaverton, Oregon, December 1993.

13. *Koppers Industries, Inc., Pittsburgh, Pennsylvania, Susquehanna Wood Treating Facilities, Vacuum Pump Emissions Study*, Chester Environmental, Pittsburgh, Pennsylvania, April 1994

FAX TRANSMISSION

TO: Dallas Safriet, EFIG

FROM: Richard Marinshaw
Midwest Research Institute
Crossroads Corporate Park
5520 Dillard Road, Suite 100
Cary, North Carolina 27511-9232
Phone: (919) 851-8181, Ext. 5359
Fax: (919) 851-3232

DATE: July 29, 1998

RECEIVING FAX NUMBER: 541-0684

SENDING FAX NUMBER: (919) 851-3232

THIS FAX CONSISTS OF 2 PAGES (INCLUDING THIS PAGE)

I have revised the AP-42 section and background report for wood preserving, making all of the changes that I could based on your comments. I have not been able to speak to Steve Smith from Koppers; he is out of the office until August 3. I left him a message to call me.

As for filling in some of the missing numbers for the various stages of the treatment cycle, I have calculated the emission factors shown in Table 4-13 using the ratios of the factors for the stages for which we did have data. The attached table shows the results of these calculations. The shading indicates which factors I was able to fill in using this method. If you compare this table to Table 4-13, you will see that the emission factors for the total treatment cycle with conditioning increased anywhere from 0 to 12 percent. Most of the factors for the total cycle increased by 8 to 10 percent.

Please call when you want to discuss this further.

EMISSION FACTORS FOR WOOD PRESERVING--CREOSOTE BY EMPTY-CELL PROCESS

Pollutant	Conditioning (Boulton)	1st blowback	Air release	2nd blowback	Initial vacuum	Steam heating	Final vacuum	Quenching	Retort unloading	Total w/cond.	Total wo/cond.
VOC	5.1E-03		1.7E-04	6.7E-05			4.4E-04			5.8E-03	6.8E-04 *
Acenaphthene	9.3E-06		1.3E-07	5.1E-08			3.4E-07			9.8E-06	5.2E-07
Acenaphthylene	2.6E-05		8.7E-07	3.4E-07			4.4E-07			2.8E-05	1.7E-06
Anthracene	1.1E-07		1.1E-08	4.3E-09			3.9E-09			1.3E-07	1.9E-08
Benzo(a)anthracene	1.2E-07		3.9E-09	1.5E-09			1.0E-09			1.4E-07	1.5E-08
Benzo(b)flouranthene	1.1E-07		3.7E-09	1.4E-09			9.5E-09			1.2E-07	1.5E-08
Benzo(k)flouranthene	4.2E-08		1.4E-09	5.5E-10			3.6E-09			4.7E-08	5.6E-09
Benzo(a)pyrene	5.6E-08		1.9E-09	7.4E-10			4.9E-09			6.4E-08	7.5E-09
Carbazole	2.5E-06		9.4E-08	3.3E-08			2.2E-07			2.8E-06	3.3E-07
Chrysene	5.9E-08		4.1E-09	1.6E-09			3.5E-09			6.8E-08	9.2E-09
Dibenzofuran	3.3E-05		4.1E-07	1.6E-07			1.0E-06			3.5E-05	1.6E-06
Fluoranthene	5.9E-07		2.0E-08	7.9E-09			5.2E-08			6.7E-07	7.9E-08
Fluorene	3.8E-06		4.9E-09	1.9E-09			2.3E-08			3.8E-06	3.0E-08
Naphthalene	7.4E-05		6.2E-07	2.4E-07			3.0E-06			7.8E-05	3.9E-06
Phenanthrene	1.6E-06		4.8E-08	1.9E-08			2.1E-07			1.9E-06	2.8E-07
Pyrene	5.1E-07		1.7E-08	6.6E-09			4.4E-08			5.7E-07	6.7E-08

Factors in units of lb/ft3 of wood treated.

11 + 13

VOC *

10.00

selected

American Wood Preservers Institute
2750 Prosperity Avenue, Suite 550
Fairfax, Virginia 22031-4312
(703) 204-0500 • Fax (703) 204-4610
http://www.awpi.org

September 21, 1998

Dallas Safriet
Emission Factor and Inventory Group (MD-14)
Emissions, Monitoring, and Analysis Division
U.S. Environmental Protection Agency
Research Triangle Park, NC 27711

Subject: Comments on AP-42

Dear Mr. Safriet:

Over the last two years we have been approached for comments on two previous occasions (August 1996 and January 1997). Thus, we were surprised that in September 1998 you are asking again for comments on an urgent basis. Copies of the documents that were e-mailed to Mr. Steve Smith of Koppers Industries on September 4th were forwarded *via* this office to several of our members and consultants in an attempt to meet your September 19th deadline. On 18 and 19 September, I e-mailed Mr. Marinshaw of MRI comments as they were received from our reviewers. I also attempted to call him at 1-919-677-0249, but the telephone to that office is disconnected. I was also not able to contact you in your office on September Friday 18.

Thus, I am sending you hard copies of the comments we received as attachments. You have made a number of changes to the document since January 1997 when we last reviewed it (*i.e.*, which we have not had the opportunity to comment on before). Some of the more critical issues include:

> Inclusion of many new constituents in the Emission Factor tables without appropriate monitoring or modeling data.
>
> Elaboration of a model to estimate emissions from the storage yard, which we have not evaluated before. In particular, the model needs to make it clear that

the surface area of the outside of the stack (not the sum of all the pieces of wood) is the key surface area parameter.

Some of the technologies that were discussed for emissions control have proven to be economically infeasible and of little benefit.

Please consult the enclosed comments for more detail. There are aspects of the accuracy and completeness of the document that only the authors who compiled the data can be responsible for. Although these are the only comments we have at this time, our comments are not to be taken as an endorsement of the document.

Sincerely,

George E. Parris, Ph.D.
Director of Environmental and Regulatory Affairs
American Wood Preservers Institute

CC: Government Affairs Committee

George Parris

From: Bock, Nick[SMTP:NBOCK@KMG.com]
Sent: Thursday, September 17, 1998 11:25 AM
To: 'George Parris'
Subject: RE: partial comments on AP-42 Wood preserving

Their were not attached files

Nick Bock, Manager, Environmental Complicance And Regulatory Affairs
Kerr-McGee Chemical LLC, Forest Products Division
Tel (405) 270-2394
FAX (405) 270 2420
email: nbock@kmg.com

-----Original Message-----
From: George Parris [mailto:gparris@awpi.org]
Sent: Thursday, September 17, 1998 9:42 AM
To: 'rmarinshaw@mriresearch.org'
Cc: 'nbock@kmg.com'
Subject: partial comments on AP-42 Wood preserving

We plan to submit more complete comments via e-mail tomorrow or late this PM. Hardcopy to follow.

However, in the interest of time, I send these comments from one of our reviewers:

p. 10.8-3 second paragraph from the bottom. "extra cylinder" should be "extra tank"

p. 10.8-4 second paragraph from the top. The "white plume" is transient and dissipates after a few minutes. Most of the time there is no plume.

fifth paragraph from the top. "vented into back into" should be "vented back into"

p. 10.8-5 and elsewhere. the square-feet in these equations is the outside surface area of the stack/pile of wood, not the surface are of all the individual pieces combined.

second paragraph from bottom. last sentence should read "Therefore, this system is not economically feasible."

p. 10.8-7 first paragraph last sentence should end as follows:

"..substances and is thus not desirable."

On all the figures emission points 3 and 4 are VOCs only not HAPs (not creosote)

On graphs the pounds are cumulative per outside surface area of the stack

is this what you wanted to call an emission factor? I would call them "cumulative emissions per 1,000 sq. ft"

The emission factor in "lb. /hour per 1,000 sq-ft" is a derivative of these curves

Table 10.8-4 footnote same comment about surface area of the stack

References p. 18 #6 Carlton Degges not Dagoes

p. 9 (3) "preservative perservative" strike one

These are not complete and are subject to revision as more comments come into me.

George Parris

Emission Factor Documentation For AP-42
Section 10.8
MRI Project No. 4945
September 1, 1998

Comments

Page	Section	Paragraph	Line	Comment	Comment Priority
1	2	1	1	Bacteria should be included in sentence	Medium
1	2	1	2	Service life extended by a factor of 5x-10x	Low
1	2.1				
	Table 2-4			The figures of crosstie treated and gallons	High
	Table 2-4			of creosote used just don't track	
				74.124 cuft/yr X 8# creo/cuft X gal/9# creo =65 mill gal creo/yr	
				Adding switch and bridge brings it to 74 million gallons/yr	
				Table 2-4 reports 94 million gallons per year.	
				The Problem: 20 million gallons per year.	
				It certainly is not in poles and piling	
				What's wrong with the numbers?	
2	2.2.1	1	1		
		Creosote Solutions			
2	2.2.1	1	2	Less penetration of Petroleum creosote solution is as good if	High
		Creosote Solutions		not better than creosote. We believe solution is less viscous	
2	2.2.1	1	3	The same treatment is the same for solution and creosote	High
		Creosote Solutions		The results are also the same. May be talking about	
				coal tar which is no longer used in our industry	
2	2.2.1	2	1	Certain species will rot before air drying: very misleading	
		Conditioning		Customer specification eliminate these species and	Medium
				german stack prevents this rot.	
5	2.3	Top of Page	1	White emisison plumes? Steam not emissions	High
				Several Hours? No way	High
				We control our naphthalene content to minimize emissions	
5	2.4	1	Last	Small hoods over doors are not economical	
				Large hood over drip pads would require capital expenditures	
				exceeding the value of total plant property and equipment!	
5	2.4	2	Whole	At Avoca our limited data suggested that water quenching in the	High
6	2.4		Whole	cylinder actually increased emissions. I am not sure if his reference	
				is Avoca. We eliminated quenching at Avoca for this reason.	
				This was a result of the inability to provide a clean water supply.	
6	2.4	1	Incinerator	We closed Avoca as a direct result of high opening costs per	Highest
				unit volume wood treated. A major consideration was the $80K	
				it cost to run the incinerator. I know of no operating incinerator	
				In our industry.	
6	2.4	last	last	Afterburners are in the same category as incinerators	Highest
16	Table 2-6		Table 2-6	The chemical constituents in this table are inconsistent with	
				values used in Title V work for creosote. -Gerg Data	
				However we better leave this alone.	
2	4.2.1.2		Ref 11	Keep in mind that this incinerator is no longer operating and	
				no plan have been made for any incinerator.	

MEMORANDUM

TO:	George Parris, American Wood Preservers Institute
FROM:	Mike Pierce, E.I.T. and Mike Corn, P.E., **AquAeTer, Inc.**
DATE:	September 17, 1998
JOB NO.:	980694B
RE:	**Proposed AP-42 Section 10.8 Document Review**

A report assembled by Midwest Research Institute (MRI) proposes certain updates to the United States Environmental Protection Agency (USEPA) *Compilation of Air Pollutant Emission Factors* (AP-42) Section 10.8 pertaining to the wood preserving industry. The report provides background information on the wood preserving industry, including: **1)** manufacturing processes, emission source characterization, pollutant inventory, etc.; **2)** a review of emission data for the industry, including collection methods and data quality and; **3)** the development of emission factors for the treatment processes.

Review of the sections pertaining to industry and process descriptions has been left to American Wood Preservers Institute (AWPI) members who are more versed in the details of wood treatment methods and industry history.

The primary role of **AquAeTer** in this review is to ascertain the validity of the section of the MRI report pertaining to the development of pollutant emission factors. The four primary areas of development in the proposed AP-42 Section 10.8 document are: **1)** the estimation of fugitive emissions from the open storage of creosote treated wood products; **2)** the development of a Temperature Correction Factor (TCF) to be used in conjunction with the aforementioned fugitive emission factor for open storage of creosote treated wood products; **3)** the development of process emission factors for total volatile organic compounds (VOC) with and without Boulton Process conditioning; and **4)** the development of process emission factors for 15 individual creosote constituents with and without Boulton Process conditioning. The development of process emission factors for the 15 individual creosote constituents is an expansion of the four hazardous air pollutants (HAPs) for which AWPI previously developed emission factors. Only one of the 15 constituents, naphthalene, is a USEPA HAP.

703 - ~~284~~ - 0700
204

George Parris

MEMORANDUM

TO: George Parris, AWPI
FROM: Mike Pierce, E.I.T.
Shaleen T. McCormick
Michael R. Corn, P.E.
AquAeTer, Inc.
DATE: September 17, 1998
JOB NO: 980694B
RE: **Additional Comments Regarding the Proposed AP-42 Section 10.8 Document Review**

The following comments are in response to the review of the United States Environmental Protection agency (USEPA) *Compilation of Air Pollutant Emission Factors* (AP-42) Section 10.8 pertaining to the wood preserving industry. These comments are intended for your consideration in addition to those offered in the attached memorandum.

- The proposed treated wood storage yard emission factors are multiplied by square footage of wood treated to arrive at a total emissions estimate. Although, MRI has given acceptable two-stage air emission factors from stored treated wood, the MRI document does not provide any guidance on the calculation of the surface area of wood to be utilized with the emission factor for calculating storage yard emissions. By neglecting such guidance, the implication is that the surface area of wood for storage yard emissions is arrived at by multiplying the number of wood pieces stored by the surface area per piece of wood. This omits a key component of the storage yard emission calculations accepted by USEPA. The manner in which treated wood products are stacked in open storage or stacking geometry is crucial to the calculation of emissions from stored treated wood and is not considered by the proposed emission factors. Stacking geometry greatly limits the surface area available for emissions from treated wood in a storage yard. This mitigates the amount of emissions substantially. Thus, the proposed fugitive emission factors result in an overestimation of total emissions from treated wood storage. Additionally, there is some concern with the TCF presented in the MRI document as described below.

- Although not immediately apparent, pollutant emissions from treatment processes are given in volume per mass multiplied by an annual production rate yielding an emission rate per year.

- USEPA has identified a total of four hazardous air pollutant (HAP) constituents, naphthalene, dibenzofuran, quinoline, and biphenyl, for reporting under Title V of the Clean Air Act and Amendments of 1990 by the wood treating industry. Of the eight PAHs reviewed in the MRI document, only one, naphthalene, is regulated as a HAP. Since, the USEPA industry specified HAPs should be the main thrust of emissions factor guidance provided by AP-42 to the wood treating industry, the proposed emission factor document is misdirected and incomplete. Guidance for the calculation of the USEPA specified HAP emissions is essential in Title V compliance.

- MRI has presented emission factors for PAHs that have not been identified as significant HAPs e.g., anthracene, fluorene, pyrene, etc. This presentation may raise new issues beyond the four HAPS accepted today.

- The USEPA AP-42 guidance document is much simpler than the AWPI Emissions Guidance Document. The AWPI Emissions Guidance Document examines in detail the processes, controls, timing, and equipment involved in the manufacture of creosote treated wood products. By evaluating a site using the AWPI Emissions Guidance Document, specific areas of concern can be identified and emission control strategy implemented.

- A comparison of the storage yard emission calculations was performed using known plant production schedules and average ambient air temperatures from a sample creosote wood treating facility. Results are presented in Tables 1A and 2A. The MRI Proposed Storage Yard Emissions Calculations, as presented in Table 1A, are calculated in accordance with the proposed AP-42 guidelines. Since no guidance was offered in the proposed document regarding the calculation of treated wood surface area available for emissions in the storage yard, the surface area is determined by multiplying the number of wood pieces stored by the surface area per piece of wood. The Amended Storage Yard Emissions Calculations, as presented in Table 2A, are calculated with the proposed emission factors, an amended TCF, and the inclusion of stacking geometry adjustments of available surface area.

- The MRI document makes no distinction between ties and poles regarding stacking geometry and age distribution. The stacking geometry and age distribution of treated ties is based on the following assumptions.

  - Treated ties are placed in storage only during the months of December to March, at the beginning of each month.
  - Treated ties products are shipped only during April to November
  - The oldest treated ties are shipped first, at the beginning of each month
  - One unit consists of 652 stacks of 144 ties or 93,888 ties total.
  - One 652-count unit (93,888 ties) is treated each month.
  - Ties, bundles, and stacks are stored in such a way that only outside surfaces have the potential to emit.

- The area emission source is calculated as six 48-crosstie units stacked three high and two wide. The total area available for emissions from this unit source is 542.5 square feet.

- The stacking geometry and age distribution of treated poles is based on the following assumptions.

  - The inventory of poles is relatively stable throughout the year. Poles are inventoried for three months.
  - Pole bundles and stacks have the potential to emit from five surfaces. Bottom emissions are accounted for as sides and ends.
  - A maximum inventory of 2,000 poles is on-site at any one time.
  - The same number of poles are treated and shipped off-site every month.
  - The oldest treated poles are shipped first, at the beginning of each month
  - All poles are laid out; 100 poles per layout; 36 hours per layout.
  - Trapezoidal stacks of 80 poles each supported by a pole riser with an external surface area of 2,856 square feet.
  - All heights are from ground level for determining surface area.

- A comparison of process point source emissions calculations was performed using known plant production data from a sample creosote wood treating facility. The emissions calculations in accordance with the proposed AP-42 guidance document result in total VOC emissions of 12,317 lb/yr with 168 lb/yr being naphthalene. Calculations using the AWPI emissions estimating program for the same site result in a total VOC emission rate of 9,006 lb/yr with 3,782 lb/yr being naphthalene. The difference in VOC emission rates can be attributed to oversimplification of source emissions. The difference in naphthalene emission rates can be attributed to the development of the proposed naphthalene emission factors from data acquired from a facility (Koppers Industries, Incorporated, Susquehanna) that utilizes condensers on emission sources that other facilities, such as this example facility, may not. The effect is to assume VOC emissions from all sources are approximately 3 percent naphthalene when in reality some process release VOCs that are 3 percent naphthalene while others release VOCs at 42 percent naphthalene. This assumption has not been directly pointed out in the comments on the MRI document.

In conclusion, the storage yard emission factors developed by MRI must include stacking geometry and age distribution factors in the AP-42 calculation procedure. MRI omitted emission factors for three of the HAPs identified by the USEPA, but have includd non-HAP PAHs. It is essential to redirect these efforts to provide emission estimates for all four HAPs identified by the USEPA. The inclusion of the non-HAP PAHs appears irrelevant at this time. Finally, emission factors for the production processes are in agreement with the USEPA calculations for VOCs and naphthalene discharged through the condenser at the Kerr-McGee Chemical LLC Avoca, Pennsylvania facility.

American Wood Preservers Institute
2750 Prosperity Avenue, Suite 550
Fairfax, Virginia 22031-4312
(703) 204-0500 • Fax (703) 204-4610
http://www.awpi.org

original sent to MRI Rick Marinshaw 2-18-97

January 10, 1997

Dallas Safriet
Emission Factor and Inventory Group (MD-14)
Emissions, Monitoring, and Analysis Division
U.S. Environmental Protection Agency
Research Triangle Park, NC 27711

Subject: Comments on AP-42

In January 1997, Mr. Richard Marinshaw of Midwest Research Institute contacted me to inquire if AWPI had any additional comments on AP-42 Section 10.8 (Draft June 1996). In August 1996, AWPI provided you with a copy of our latest "Statistical Report" (1995) and a copy of a document by AquAeTer "Calculated Emissions from Creosote-Treated Wood Products."

We have recently circulated the full text of your draft document to about 50 of our members and have received the following comments in addition to the material that we already sent to you:

page 2-6, line 19: where you say "mineral spirits" the solvents are mainly "petroleum carriers."

, line 22: replace "I," "II," and "III" with "A," "B," and "C"

page 2-7, line 10: currently vapor drying is rarely if ever used

suggest you add kiln drying see "EPA RCRA Compliance Guide" (EPA-305-B-96-001) June 1996, section 2-4

page 2-8, line 6-7: waterborne treaters mainly use the "modified full cell"

, line 20-21: wood treated by the "Boulton" process is generally not considered to be treated by the "full cell" process

page 2-10, line 3: change "always" to "most likely"

page 2-12, line 25: insert "Oilborne" before "wood treatment plants..."

, line 27: insert "potential" in front of "source of VOC and HAP emissions.

There are aspects of the accuracy and completeness of the document that only the authors who compiled the data can be responsible for. Although these are the only comments we have at this time, our comments are not to be taken as an endorsement of the document.

Sincerely,

Gene S. Bartlow, CAE
President & CEO
American Wood Preservers Institute

CC: Government Affairs Committee

Forest Conservation Through Wood Preservation

OPTIONAL FORM 99 (7-90)
FAX TRANSMITTAL # of pages ▶ 7

To Dallas Safriet	From G. C. Crumpler
Dept./Agency	Phone # 1-0881
Fax # 6-0684	Fax #

NSN 7540-01-317-7368 5099-101 GENERAL SERVICES ADMINISTRATION

Martin J. Wikstrom
Manager
Government Affairs

May 5, 1994

Mr. Eugene P. Crumpler, Jr.
OAQPS (MD-13)
U.S. Environmental Protection Agency
Research Triangle Park, NC 27711

RE: EPA Request for Review of Emission Calculations

Dear Mr. Crumpler:

This letter is in response to your letter of March 15, 1994 in which you requested that the American Wood Preservers Institute (AWPI) review a series of calculations that you performed in an attempt to make a determination of whether uncontrolled creosote treatment plants are major sources. Based upon our review, the Institute has a number of questions and comments.

EPA appears to be building its case from the recent testing on the Burke-Parsons-Bowlby facility. It also appears that the Agency is attempting to use this data to support the prior testing at the Wyckoff facility, which others within EPA have already acknowledged is suspect, as reported in the proposed AP-42 addition. AWPI has already commented extensively on the many flaws that exist in the Wyckoff data (see AWPI comments of February 18, 1994 to Dallas W. Safriet, OAQPS, U.S. EPA) such as using maximum values rather than average values. EPA has concluded that the naphthalene numbers were in error, and the Agency did not use these numbers in the proposed AP-42. Your calculations attempt to use the Wyckoff data to support the obviously incorrect vacuum system data from the Burke-Parsons-Bowlby testing.

There are a number of ways to prove that the Burke-Parsons-Bowlby vacuum emissions are incorrect. The following discussion illustrates this.

Naphthalene Concentrations

The data indicating a concentration of 130,000 mg/m^3 naphthalene is not correct. The reported naphthalene concentration is in conflict with all of the accepted theorems regarding gaseous emissions from solutions in equilibrium with air. Theory suggests that the mole fraction of a compound in the air in equilibrium with a fluid is a function of the mole fraction of the compound in the liquid phase, and the vapor pressure of the compound. At 3% by weight naphthalene, it is

American Wood Preservers Institute
Tysons International Building, Suite 150
Vienna, VA 22182
(703) 893-4005 • (703) 893-8492 FAX

impossible for air in creosote to contain 130,000 mg/m^3 of naphthalene. In fact, air in equilibrium with pure naphthalene would not even approach this level. This is explained below.

Given these facts or assumptions:

1. The molecular weight of naphthalene is 129.2

2. The vapors leaving the retort go through a condenser which should cool them to about 120°F, but for the purpose of this evaluation, assume that the naphthalene was at 180°F which was the temperature of the oil during the treatment.

3. The vapor pressure of naphthalene at 180°F is approximately 0.1566 psia (from Cox Chart). Therefore the mole fraction of naphthalene in the air at equilibrium with pure naphthalene would be 0.01(0.1566/14.7).

4. The molecular weight of air is approximately 29.

5. A pound-mole of ideal gas occupies approximately 359 cubic feet at standard conditions.

From above, air in equilibrium with pure naphthalene at 180°F will contain naphthalene at a 0.01 mole fraction. Assuming an ideal gas, the 0.01 moles of naphthalene would exist in 359 cubic feet of air at standard conditions, or 467 cubic feet at 180°F. The concentration in air at equilibrium with pure naphthalene at these conditions would be approximately 45,000 mg/m^3. This concentration would be the maximum that could be expected for air in equilibrium with pure naphthalene at 180°F. The maximum concentration at standard temperature would be much lower. The condenser ahead of the vacuum pump should be reducing the temperature of the exit gas to approximately the temperature of the vacuum in existence at the time. Given that the measured naphthalene concentration in the creosote was less than 3%, the reported result of 130,000 mg/m^3 can not reflect a true air concentration.

There is no reason for the naphthalene concentration in vapors removed during the final vacuum to be substantially higher than the naphthalene concentration in the vapors released during work tank blow back after a long Boulton cycle. On the contrary, the concentration exiting the vacuum system should be substantially less, because the vapors have been cooled by passing through the surface condenser. However, the reported concentration in the final vacuum exhaust is 72,000 times higher than the reported concentrations in the work tank emissions. The reported concentration in the final vacuum exhaust is even 13.5 times higher than the reported concentration during the Boulton cycle vacuum. These concentrations should be similar. These discrepancies provide additional weight to the argument that the reported concentrations in the vacuum exhaust is seriously in error.

Vacuum Cycle Flow Rate

The estimated flow rate of 101.5 dry standard cubic feet per minute (DSCFM) during the vacuum cycle is incorrect. This flow rate was obtained by using the pump curve from the vacuum pump in use at the plant. The derivation of this is included in the EPA document. This derivation is in error for several reasons.

1. The pump curve represents the maximum non-condensable material that could be accommodated by the pump at the given vacuum. It does not follow that the pump is pumping at that rate. In fact, the pump in not pumping at that rate for a variety of reasons. First, the pump curves are developed using a pure, dry, synthetic oil as the sealing fluid. This oil is not used by Burke-Parsons-Bowlby, and any contamination of this oil by water will adversely affect performance. Second, the pumping rate assumes no pressure drop due to flows. In fact, there are significant pressure drops in the system caused by flow of condensable and non-condensable materials. The 22 inch Hg vacuum is being measured in the cylinder. The vacuum seen by the pump is substantially higher. It must be higher, for this pressure differential is what is causing flow to occur.

2. The total void of the retort being evacuated is 1,847 cubic feet. For a flow rate of 101.5 DSCFM to be continuing, there would have to be leaks in the system equal to this volume. These leaks would be occurring across a 10.7 psia (22 in Hg) pressure differential in the amount of 101.5 cubic feet per minute, or 760 gallons per minute. If such leaks existed, they should manifest themselves in the form of massive creosote leaks when the cylinder is full of preservative at a pressure of 200 psig. Such leaks were not observed in the system.

3. The attempt to use the vacuum pump curve to estimate actual air flow is incorrect. It is analogous to looking at open circuit voltages in an electrical system and assuming the

Vacuum Cycle Flow Rate

The estimated flow rate of 101.5 dry standard cubic feet per minute (DSCFM) during the vacuum cycle is incorrect. This flow rate was obtained by using the pump curve from the vacuum pump in use at the plant. The derivation of this is included in the EPA document. This derivation is in error for several reasons.

1. The pump curve represents the maximum non-condensable material that could be accommodated by the pump at the given vacuum. It does not follow that the pump is pumping at that rate. In fact, the pump in not pumping at that rate for a variety of reasons. First, the pump curves are developed using a pure, dry, synthetic oil as the sealing fluid. This oil is not used by Burke-Parsons-Bowlby, and any contamination of this oil by water will adversely affect performance. Second, the pumping rate assumes no pressure drop due to flows. In fact, there are significant pressure drops in the system caused by flow of condensable and non-condensable materials. The 22 inch Hg vacuum is being measured in the cylinder. The vacuum seen by the pump is substantially higher. It must be higher, for this pressure differential is what is causing flow to occur.

2. The total void of the retort being evacuated is 1,847 cubic feet. For a flow rate of 101.5 DSCFM to be continuing, there would have to be leaks in the system equal to this volume. These leaks would be occurring across a 10.7 psia (22 in Hg) pressure differential in the amount of 101.5 cubic feet per minute, or 760 gallons per minute. If such leaks existed, they should manifest themselves in the form of massive creosote leaks when the cylinder is full of preservative at a pressure of 200 psig. Such leaks were not observed in the system.

3. The attempt to use the vacuum pump curve to estimate actual air flow is incorrect. It is analogous to looking at open circuit voltages in an electrical system and assuming the same voltage exists across the system components after the load is applied. It simply is not correct.

Additional Discrepancies

Testing included total hydrocarbons (THC) and speciated organics (MM5) such as naphthalene. Results on both should be included and compared for consistency.

Scrubber water was tested for THC and MM5. Results should be provided and a mass balance should be attempted to compare with emission calculations for before and after the scrubber.

Where THC levels are converted to naphthalene levels, it should be recognized that not all organics are from creosote; some are from the wood. Also, naphthalene concentrations in the vapor may be greater than in the liquid creosote. Although these factors may balance each other,

they are unknowns which may introduce inaccuracies. (This also applies to the Kerr-McGee test results.)

EPA is reportedly using gauge readings to estimate releases from the work tank during the return of preservative from the retort. The beginning gauge reading reported for the "Final Blowback" is substantially different than the ending gauge reading for the "First Blowback." These gauge readings should be virtually the same. Normally the preservative return after the final vacuum is only a few hundred gallons whereas EPA shows 3,500 gallons. The first preservative returns could easily be checked using the cylinder void and the cubic volume of the charge however these values were not given to us so we were unable to perform this check.

The comments provided have focused on the Burke-Parsons-Bowlby facility testing, and in particular, the vacuum system exhaust estimates, because these are the results that appear to be seriously in error. AWPI hopes that our comments are useful and would welcome your reaction after reading them.

Finally, AWPI has requested on many occasions in the past that we be allowed to review the entire test data. To date, EPA has not provided the complete test data package to the Institute. This data contains significant information that would allow AWPI to be able to provide the Agency with additional and more thorough peer review. We again ask that the complete data file be provided. We look forward to hearing from you.

Sincerely,
AMERICAN WOOD PRESERVERS INSTITUTE

Martin J. Wikstrom

Martin J. Wikstrom

cc: AWPI Regulatory Affairs Committee

Forest Conservation Through Wood Preservation

Martin J. Wikstrom
Manager
Government Affairs

May 5, 1994

Mr. Eugene P. Crumpler, Jr.
OAQPS (MD-13)
U.S. Environmental Protection Agency
Research Triangle Park, NC 27711

RE: EPA Request for Assistance in Conducting Storage Yard Practices Survey

Dear Mr. Crumpler:

The American Wood Preservers Institute (AWPI) is responding to your verbal request for the Institute's assistance in conducting a survey of storage yard practices at wood preserving manufacturing operations. This survey was to address how our industry manages finished products at facilities utilizing creosote and/or pentachlorophenol as preservatives. You had asked that AWPI send this survey to its member companies and to non-member companies as well. This survey is in addition to the NESHAP Information Collection Request (ICR) that EPA sent to the wood preserving industry in August, 1992.

AWPI solicited comments from industry regarding your request for the proposed survey. We are providing you with the following comments.

The policy issue of EPA including finished goods in a major source determination is a serious concern to AWPI's membership. While not disputing the Agency's authority under the Clean Air Act to include finished goods in such a determination, the Institute notes that the Act does not require such a policy. Because of the very serious nature of this issue, AWPI is elevating the question within the Agency. AWPI is seeking assurances from EPA that this policy, should the Agency decide to adopt it, will be uniformly applied to finished products from all industries subject to determinations under the Act.

In response to your request for AWPI to conduct a survey, the Institute notes that circumstances have changed considerably since the original discussions regarding the survey took place. At the inception of the program, the storage yards were being discussed as potential candidates for regulation. However, EPA acknowledged that the quality of the existing data was inadequate to

American Wood Preservers Institute
Tysons International Building, Suite 150
Vienna, VA 22182
(703) 893-4005 • (703) 893-8492 FAX

make a decision. EPA is also clearly aware of the poor quality and paucity of existing data in its proposed AP-42 guidelines.

The Agency was pursuing a plan to develop a test protocol and once finalized to conduct a test at a representative storage yard. Towards that end, AWPI provided input regarding the proposed test protocol and the vast number of variables which exist in the industry for use in a modeling program. Subsequently, EPA decided not to proceed with a testing program for the finished goods storage yard due to a number of internal budgetary and other technical reasons.

Since the Agency does not have existing analytical data or a model to provide a technically defensible estimate of potential containment releases, AWPI does not feel proceeding with a survey would yield any meaningful information for EPA to determine the status of regulating finished goods for our industry. The use of the existing poor quality data will not meet this criteria. A survey of storage yard practices will only reflect the diversity of products, handling methods and market conditions that exist. AWPI does not believe that this information could be of any practical utility. For these reasons, AWPI must decline the invitation to conduct a survey for the Agency at this time.

AWPI would like to continue our dialogue with EPA to provide meaningful data and information for the Agency's review. We look forward to your response.

Sincerely,
AMERICAN WOOD PRESERVERS INSTITUTE

Martin J. Wikstrom
Manager Government Affairs

Jeffrey A. Smigel
Clean Air Act Subcommittee

cc: AWPI Regulatory Affairs Committee

Forest Conservation Through Wood Preservation

Martin J. Wikstrom
Manager
Government Affairs

February 18, 1994

VIA FACSIMILE

U.S. Environmental Protection Agency
Office of Air Quality and Planning Standards
Emission Inventory Branch (MD-14)
Research Triangle Park, NC 27711

ATTN: Dallas W. Safriet

RE: Section 10.8, *Wood Preserving*
AP-42, *Compilation of Air Pollutant Emission Factors*

The American Wood Preservers Institute (AWPI or Institute) and its member companies hereby submit comments in response to the United States Environmental Protection Agency's (EPA or Agency) August 26, 1993 draft of Section 10.8, *Wood Preserving*, that EPA is proposing to publish in the supplement to AP-42, *Compilation of Air Pollutant Emission Factors*.

AWPI is the national trade association representing the wood-preserving industry. The Institute's members include manufacturers of treated-wood products; registrants of wood-preserving pesticides; suppliers of raw materials and equipment; and providers of allied services (e.g., environmental engineering and consulting firms).

AWPI supports the Agency's efforts to publish emission factors for the wood preserving industry. Wood preservers would welcome emission factors that, when published, would be technically correct and representative of the industry as a whole.

BACKGROUND

After being notified in early 1992 that the EPA had determined that the wood treating industry may reasonably be anticipated to emit several of the 189 hazardous air pollutants (HAPs), the Institute began an ongoing dialogue between EPA's Office of Air Quality and Planning Standards (OAQPS) staff and members of AWPI's Clean Air Act Subcommittee. AWPI met with OAQPS to determine the direction the Agency would be pursuing in meeting the requirements set forth under the Clean Air Act (CAA), as amended November 1990.

In August 1992, EPA sent Wood Treatment NESHAP Information Collection Requests (ICRs) to wood treating facilities throughout the country. ICRs were completed for 86 facilities representing 67 companies and returned to EPA later that same year.

American Wood Preservers Institute

Tysons International Building, Suite 150
Vienna, VA 22182
(703) 893-4005 • (703) 893-8492 FAX

Most of the HAP emissions reported in the ICR responses were not based on actual test data. Only 3 of the 86 facilities responding to the ICR used actual test data to quantify HAP emissions and these data were not believed to be representative of the treatment process nor of the wood treatment facility (RTI Memorandum, January 11, 1993, from Betty Gatano, RTI to Eugene Crumpler, USEPA OAQPS).

Following the submission of the ICRs, AWPI again met with OAQPS staff on January 12, 1993. At that meeting, the Agency and it's contractor discussed the results of the ICR effort. Noting that existing data and actual test results were very limited, EPA informed AWPI that the Agency intended to get out in the field as soon as possible to obtain test data. Emission testing was performed at two wood treating facilities in August and September of 1993. To date, data from these tests has not been released by EPA .

EMISSION FACTOR DOCUMENTATION FOR AP-42 SECTION 10.8

Given the Institute's history of cooperation with OAQPS and the mutual understanding that minimal existing data exists, the AWPI was surprised to learn of EPA's intention to release emission factors for wood treating facilities as a supplement to AP-42. AWPI is very concerned about the quality of the data included in the draft document not to mention the paucity of those data.

In the draft's introduction, EPA states that AP-42 is provided to respond to new emission factor needs. AWPI believes that what is needed are reliable emission factors. Publishing EPA-acknowledged non-representative data is not needed and works at cross-purposes to the EPA goal.

AWPI understands that the Agency intends to publish only Section 10.8, *Wood Preserving* (Section 5 of the draft document). However, since there are some serious errors, inaccuracies and omissions throughout, AWPI is submitting comments on the entire document.

GENERAL COMMENTS

The Institute would like to have specific guidance from the Agency on how industry should evaluate emission factors using nondetectable or "less than" values provided by EPA? AWPI does not believe that emission factors should be published for compounds that were not detected in any test. For example, pentachlorophenol was not detected in any of the tests on pentachlorophenol conditioning or vacuum cycles, yet there are emission factors published for this compound from these sources. Further, the "less than" values provide no data on what the emission *is*, only on what it *is not*. Calculating any emissions under these scenarios would be speculative at best. Consequently, these factors should be eliminated from AP-42.

Table 4.1 of the draft lists 10 references for wood preserving which were documented and reviewed in the process of developing emission factors. Eight of these were rejected as unsuitable. Seven of the eight were rejected due to either a lack of or insufficient process data. The eighth was rejected due to lack of emission rates. The two

remaining references were the Wyckoff facility on Bainbridge Island (Reference 3) and the Koppers' facility in Oroville (Reference 10).

The Institute wishes to emphasize that waterborne preservatives, particularly chromated copper arsenate (CCA), have been studied by EPA's OAQPS and found not to be a significant source of air contaminants. This is the reason why this segment of the industry was not considered for inclusion in the major source category.

Data is presented in the draft from the 1988 study performed at the Koppers Industries' Oroville, California facility (characterized by EPA as "poor") for chromium and copper emissions from the CCA vacuum exhaust. These values are so small that they are virtually insignificant. However, a treater may be forced to spend a great deal of time and money to make this calculation and fill in paper simply because they are "in the book." As for ammoniacal waterbornes, it should be noted that the only potential emission of any significance would be ammonia.

Many of the emission factors provided by the proposed AP-42 are for constituents that are not HAPs under the Clean Air Act (i.e., acenaphthene, phenanthrene, fluorene, acenaphthalene, 2-methylnaphthalene).

THE WYCOFF FACILITY DATA

Since most of the proposed emission factors are based on the Wyckoff study, AWPI would like to offer some comments specific to those data. There are several points about that study which cause results to be less reliable and/or to substantially overestimate emissions.

The volume of the cylinder and associated piping is the maximum air volume that could be removed, assuming no significant leaks. The fact that vacuum was achieved negates the possibility of significant leakage. The Wyckoff facility had two vacuum pumps serving six cylinders. Although each cylinder had its own condenser and only one cylinder was operated on a vacuum pump during the study test, most piping would still have been connected to the vacuum system. Thus, the total volume of air available during this test could be somwhat higher than a single cylinder system. However, even this would not account for the mass flows reported with the Wyckoff data. Given that the mass flows computed for releases from the vacuum system during the conditioning cycle and the final vacuum cycle were so high, the reported results must be erroneous and should not be offered by EPA as reliable emission factors.

Analytical results seem very questionable. For the creosote vacuum test, EPA decided that the naphthalene results were unreliable, but chose to use the remaining data. However, for the duplicate test results, other constituents were also highly variable. Acenaphthene results were 3,600 and 40,000 – about a factor of ten variance. Fluorene results were 4,700 and 25,000 – about a five fold difference. Other results varied by a factor of two to four.

Further, test results clearly demonstrate cross contamination. Using EPA's proposed emission factors to treat a theoretical equivalent volume of wood with

pentachlorophenol versus treating that same volume of wood with creosote, AWPI was amazed to discover that a pentachlorophenol treater would have larger emissions of creosote constituents than a creosote treater! For example, acenaphtene results associated with pentachlorophenol were 0.028 lb/cf – an order of magnitude higher than the 0.0026 lb/cf reported for the creosote conditioning cycle. It is not surprising to see that EPA has given these data an "E–Poor" rating – the lowest emission factor quality rating.

Also the emission factors are reportedly based on an "average" of three test runs from one test. In many cases, constituents were not detected in many of the test runs. For instance, pentachlorophenol was not detected in any of the conditioning cycle or final vacuum/cool-down cycle tests yet it was given an emission factor of <0.0009 lb/cf. It appears to AWPI that the fugitive emission factors for pentachlorophenol are based on maximum values reported in the draft Wyckoff report (i.e., see Table 5.9 of that report). As stated earlier, AWPI does not feel that emission factors should be published when the compound was not detected in any test.

The cylinder door fugitive emissions are also quite variable, even between duplicate samples. Thus, these results are of questionable accuracy. AWPI is unable to trace the calculations from the Wyckoff study to reach the emission factors stated in the AP-42 document. Indeed, the calculations are not well documented. For example, no mention is made of factors such as ambient wind velocity. Considering the fact that a treating cylinder is horizontal, typically 6' in diameter by 140' in length, and closed on one end, it is inconceivable that the estimated flow rate of 4,000 acfm could actually ever occur. AWPI requests that EPA share the background calculations to assure that the raw data is properly used and interpreted and that formulas and calculations are correct. Where duplicate tests were made, was the factor derived from the minimum, maximum or average value?

Further, Wycoff used piston vacuum pumps. This type of pump is unusual in the wood treating industry. This is merely one example of how this plant and the associated emission results are probably not representative of our industry (as noted by EPA on page 26 of the documentation).

And this is only one such difference. Others differences which reflect the fact that not all treating facilities are alike include:

- different wood species;
- different overall cycles to meet retention/penetration;
- different conditioning cycles;
- different treating/vacuum cycles;
- different post treating cycles (e.g., steaming, holding in cylinder following treatment);
- different mechanical equipment (e.g., not only pump types but size, surface condensers (or in some cases, barometric condensers), equalizing lines between cylinders and work tanks); and
- different sources of creosote or other wood preservatives.

Following are specific comments on the draft document.

SPECIFIC COMMENTS ON THE DRAFT

(p. 6, Table 2-3)

Table 2-3 should show creosote under the "oilborne preservative" heading. HAPs should be indicated in bold or by footnote since many of the compounds of creosote are not HAPs. Constituent levels/percentages within creosote will vary considerably depending on the source. A footnote should be added to reflect this.

(p.7, para. 1)

Several "drawbacks" (of creosote) were cited. Among these so-called "drawbacks" are:

- The term "foul odor" is subjective and AWPI objects to its use.
- Poor paint retention is not a "drawback" as creosote treated wood does not need to be painted.
- Creosote treated wood is not "toxic to plants." This statement is unfounded and should be withdrawn.
- Skin irritations and burns can arise from the improper handling of creosote-treated wood. Proper handling causes no problems and therefore is not a "drawback."

(p. 7, para. 3)

The volatile solvents liquefied petroleum gas and methylene chloride are no longer used with pentachlorophenol solutions. They have been replaced with mineral spirits.

(p. 7, para. last)

Acid chromate, ammoniacal copper arsenate, chromated zinc chloride and flourochrome arsenate phenol are not "standard wood preservatives used in water solution" and should be deleted. These are no longer used in the United States.

(p. 8, para. 1)

In the second sentence, replace "ammoniacal copper arsenate" with "ammoniacal copper zinc arsenate (ACZA)" and add ", as well as above-ground uses." at the end to properly complete the sentence.

(p.8, para. 2)

Delete ", but protected from rain," in the last sentence.

(p. 8, para. 3)

Delete first sentence in its entirety. The second sentence should read: "Since certain wood species will rot before air drying can be completed in some climates, wood is artificially conditioned ..." Therefore, "Because time is insufficient for air seasoning," should be deleted.

Steaming and Boultonizing also have the added effect of disinfecting (killing decay organisms). Conditioning may occur in "clean" cylinders (e.g., a segregated system) in the absence of preservative, thereby avoiding a preservative emission from this step of the process. Delete the last sentance because vapor drying is no longer used.

(p. 8, para 4)

First sentence (finished on p. 9) should end in "or nonpressure thermal processes, which do not involve the use of direct induced pressure. Delete the second sentence.

(p. 10, Figure 2-1)

There are no VOCs from waterborne preservative operations other than those naturally ocurring in the wood and these would be very small. Figure 2-1 should clearly state this. A separate figure could also be added for waterbornes to avoid potential misunderstandings.

(p. 11, para. 1)

In step 5 of the full-cell process, the terms "briefly" and "most of the" are subjective and should be deleted.

(p. 11, para. 3)

The statement "This process is only used on wood 5 centimeters or less" is incorrect and should be deleted.

(pp. 13-14, Section 2.3)

The report should recognize that waterborne solutions are not typically associated with significant emissions. As for ammoniacal waterbornes (ACZA), it should be noted that the only potential emission of any significance would be ammonia.

(p. 13, para. 4)

Again, conditioning may occur in "clean" cylinders (e.g., a segregated system) in the absence of preservative, thereby avoiding a preservative emission from this step of the process.

(p. 13, para. 5)

Water is the major component of the "white emission plume" referenced and this should be noted.

(p. 14, para. 3)

Under 2.4 Control Technology, AWPI resoundingly agrees with the EPA opinion that ventilation hood controls for freshly treated charges are economically unfeasible. It should be noted that this applies not only to retrofits of existing plants but to new plants as well.

(p. 15, para. 1)

An additional drawback to a water quench system is the fact that such a system generates a significant quantity of wastewater and that wastewater would be a listed hazardous waste.

(p. 15, para. 2)

A properly sized condenser provided with adequate cooling water will condense virtually all of the organics in the exhaust.

(p. 17)

Under 3.2 Emission Data Quality Rating System, EPA should consider supplementing or requesting supplements to existing data so that more emission factors could be derived. Many of the five exclusion factors could be overcome with additional documentation.

(p. 23, para. 1)

AWPI would like to see copies of the calculations referred to in this paragraph to provide peer review.

(p. 23, para. 4)

The Oroville facility uses the "empty cell" process. It does not use the "full-cell" process.

(p. 26, para. 1)

AWPI strongly agrees with EPA that "it is likely that these emission factors are not representative of the industry." That is one of the reasons why AWPI implores EPA to not release these particular factors at this time and to pursue meaningful data.

(p. 26, p. 40)

AWPI questions in the strongest terms whether the factors, especially with regards to the Wyckoff study, are based on "averages" (see discussion earlier).

(pp. 27-38)

Tables 4-3 through 4-13 are all entitled "Full-Cell." The Oroville facility described as "Reference Number 10" does not use the full-cell process. Were the other tests actually conducted on a full-cell process? Full-cell is seldom used in creosote treating. Only marine timber is preserved in this manner.

(pp. 32-34 and p. 38)

Creosote constituents would not be emitted from a pure pentachlorophenol system. Was this cylinder alternately used for creosote and pentachlorophenol? Was it cross contamination due to the equipment configuration unique to this facility? The text should explain why creosote constituents were detected.

(pp. 27-28, p. 31)

Pentachlorophenol would not be emitted from a pure creosote system. This data should be deleted or a statement of explanation provided.

(p. 10.8-2, initial)

Delete ", but protected from rain," in the last sentence.

(p. 10.8-2, para. 1)

Delete first sentence in its entirety. The second sentence should read: "Since certain wood species will rot before air drying can be completed in some climates, wood is <u>artificially</u> conditioned ..." Therefore, "Because time is insufficient for air seasoning," should be deleted.

Steaming and Boultonizing also have the added effect of disinfecting (killing decay organisms). Conditioning may occur in "clean" cylinders (e.g., a segregated system) in the absence of preservative, thereby avoiding a preservative emission from this step of the process. Delete the last sentance because vapor drying is no longer used.

(p. 10.8-2, para 2)

First sentence (finished on p. 9) should end in "or nonpressure <u>thermal</u> processes, which do not involve the use of <u>direct</u> induced pressure. Delete the second sentence.

(p. 10.8-3, Full-cell process step 5)

The terms "briefly" and "most of the" are subjective and should be deleted.

(p. 10.8-3, Full-cell process last para.)

A note should be added pointing out that segregated systems can be utilized where the steam conditioning and the preservative application steps may be conducted in separate cylinders.

(p. 10.8-3, Modified full-cell process)

The statement "This process is only used on wood 5 centimeters or less" is incorrect and should be deleted.

(p. 10.8-4)

There are no VOCs from waterborne preservative operations other than those naturally ocurring in the wood and these would be very small. The figure should clearly state this. A separate figure could also be added for waterbornes to avoid potential misunderstandings.

(p. 10.8-7, Emissions)

EPA should acknowledge in Section 10.8.2 Emissions the poor quality of the data and the likelihood that these emission factors are not representative of the industry (as was done in Section 4.2.3 on page 26).

The report should recognize that waterborne solutions are not typically associated with significant emissions. As for ammoniacal waterbornes (ACZA), it should be noted that the only potential emission of any significance would be ammonia. The report should clearly state such.

(p. 10.8-8 and p. 10.8-9)

Tables 10.8-1 and 10.8-2 are entitled "Full-Cell." The Oroville facility described as "Reference Number 5" does not use the full-cell process. Were the other tests actually conducted on a full-cell process? Full-cell is seldom used in creosote treating. Only marine timber is preserved in this manner.

(p. 10.8-8, Table 10.8-1)

Pentachlorophenol would not be emitted from a pure creosote system. This data should be deleted or a statement of explanation provided.

(p. 10.8-9, Table 10.8-2)

Creosote constituents would not be emitted from a pure pentachlorophenol system. Was this cylinder alternately used for creosote and pentachlorophenol? Was it cross contamination due to the equipment configuration unique to this facility? The text should explain why creosote constituents were detected.

(p. 10.8-10, Table 10.8-3)

This table is totally inappropriate and should be deleted. Even a large treater using the emission factors proposed would report results so small as to be insignificant.

(p. 10.8-11, Controls)

The report should make clear that this does not apply to CCA treating processes.

(p. 10.8-11, para. 2)

AWPI resoundingly agrees with the EPA opinion that ventilation hood controls for freshly treated charges are economically unfeasible. It should be noted that this applies not only to retrofits of existing plants but to new plants as well.

(p. 10.8-11, para 3)

An additional drawback to a water quench system is the fact that such a system generates a significant quantity of wastewater and that wastewater would be a listed hazardous waste.

CONCLUSION

With almost 80% (50 out of 63) of the proposed emission factors coming solely from the Wyckoff facility test, AWPI is very concerned that EPA would be making a serious mistake in publishing data that are so unqualified and of such poor quality. AWPI urges EPA to hold off on issuing Section 10.8 until such time as more realistic and valid data can be produced. In that regard, AWPI members are in the process of gathering additional data which will be forwarded to EPA upon completion.

AWPI is determined to continue in the ongoing spirit of cooperation that has been established with the Agency's OAQPS staff. The Institute is willing to meet with you and discuss these comments in greater detail if you believe this would be constructive. Should you have any questions regarding these comments, please do not hesitate to contact us.

Submitted by,
AMERICAN WOOD PRESERVERS INSTITUTE

Martin J. Wikstrom
Manager, Government Affairs

cc: AWPI Clean Air Act Subcommittee
E. Crumpler, U.S. EPA OAQPS

American Wood-Preservers' Association

President
Anders E. Lund
Anders E. Lund, Inc.
P.O. Box 2534
Farmington Hills, MI 48333
313-477-0843
FAX: 313-477-4469

Executive Vice President
John F. Hall
P.O. Box 286
Woodstock, MD 21163-0286
410-465-3169
FAX: 410-465-3195

January 10, 1994

Ms. Dallas W. Safriet
Environmental Engineer
United States Environmental Protection Agency
Emission Inventory Branch (MD-14)
Research Triangle Park, North Carolina 27711

Dear Ms. Safriet:

This is in response to your letter of January 4, 1994 transmitting a draft version of Section 10.8, a proposed supplement to AP-42.

The American Wood-Preservers' Association is not involved in air quality issues. You may want to send the Section 10.8 draft to the following wood preserving organizations which do address air quality and other environmental issues:

American Wood Preservers Institute
1945 Old Gallows Road
Vienna, Virginia 22182

Western Wood Preservers Institute
601 Main Street, Suite 401
Vancouver, Washington 98660

Southern Pressure Treaters Association
140 Cove Avenue (36542)
P.O. Box 2389
Gulf Shores, Alabama 36547-2389

I note that the draft refers to two AWPA publications, the 1991 *Book of Standards* and Mr. James T. Micklewright's "Wood Preserving Statistics, 1988." The 1993 edition of the *Book of Standards* and the 1991 edition of Mr. Micklewright's study are currently available from AWPA at $42 and $50 respectively.

Sincerely,

John F. Hall

RECEIVED
SEP 1 8 1998
AWPI

optimizing environmental resources ♦ water, air, earth **AquAeTer**

MEMORANDUM

TO:	George Parris, American Wood Preservers Institute
FROM:	Mike Pierce, E.I.T. and Mike Corn, P.E., **AquAeTer, Inc.**
DATE:	September 17, 1998
JOB NO.:	980694B
RE:	**Proposed AP-42 Section 10.8 Document Review**

A report assembled by Midwest Research Institute (MRI) proposes certain updates to the United States Environmental Protection Agency (USEPA) *Compilation of Air Pollutant Emission Factors* (AP-42) Section 10.8 pertaining to the wood preserving industry. The report provides background information on the wood preserving industry, including: **1)** manufacturing processes, emission source characterization, pollutant inventory, etc.; **2)** a review of emission data for the industry, including collection methods and data quality and; **3)** the development of emission factors for the treatment processes.

Review of the sections pertaining to industry and process descriptions has been left to American Wood Preservers Institute (AWPI) members who are more versed in the details of wood treatment methods and industry history.

The primary role of **AquAeTer** in this review is to ascertain the validity of the section of the MRI report pertaining to the development of pollutant emission factors. The four primary areas of development in the proposed AP-42 Section 10.8 document are: **1)** the estimation of fugitive emissions from the open storage of creosote treated wood products; **2)** the development of a Temperature Correction Factor (TCF) to be used in conjunction with the aforementioned fugitive emission factor for open storage of creosote treated wood products; **3)** the development of process emission factors for total volatile organic compounds (VOC) with and without Boulton Process conditioning; and **4)** the development of process emission factors for 15 individual creosote constituents with and without Boulton Process conditioning. The development of process emission factors for the 15 individual creosote constituents is an expansion of the four hazardous air pollutants (HAPs) for which AWPI previously developed emission factors. Only one of the 15 constituents, naphthalene, is a USEPA HAP.

ESTIMATION OF FUGITIVE EMISSIONS FROM OPEN STORAGE OF CREOSOTE TREATED WOOD PRODUCTS

Midwest Research Institute (MRI) utilizes the identical methodology introduced by **AquAeTer** in *Calculated Emissions from Creoste-Treated Wood Products (Cross-Ties and Poles)* (1994) for the estimation of fugitive emissions during open storage of treated wood products. The emissions are approximated by multi-phase exponential curves regressionally fit to data obtained during a 1990 Koppers Industries, Inc. (KII) emissions test at the Oroville, California facility. The original equation was a three curve approximation of naphthalene emissions. The newly proposed equation set differs from previous versions as the data set has been adjusted for corrected sampling times (as per a memo from Steve Smith, KII to Rick Marinshaw, MRI dated July 1997) and simplified from a three curve equation to a two curve equation. Also, the proposed fugitive emissions equations have been expanded to include additional polycyclic aromatic hydrocarbon (PAH) constituents, but do not include 3 of the 4 specified USEPA HAPs.

Although MRI has given acceptable two-stage air emission factors from stored treated wood, a primary component of the emission calculation accepted by USEPA has been omitted. The treated wood storage yard emission factors are multiplied by square footage of wood treated to arrive at a total emissions estimate. However, the manner in which treated wood products are stacked in open storage or stacking geometry is not considered by the proposed emission factors. Stacking geometry greatly limits the surface area available for emissions from treated wood in a storage yard. This mitigates the amount of emissions substantially and this approach has been technically accepted by the USEPA. The proposed fugitive emission factors result in a gross overestimation of total emissions from treated wood storage if based solely on total volume of wood, converted to square footage, treated per year. Additionally, there is some concern with the temperature correction factor (TCF) presented in the MRI document as described below.

Review of the proposed emission equations indicates sound physical and mathematical foundations are observed and obeyed throughout the development. The simplification of the open storage fugitive emissions equations to a two curve approximation will underestimate initial emission rates and quantities because it ignores the initial temperature driven emission phase. During this phase, freshly treated wood rises in temperature upon removal from the retort as it is no longer subject to an applied vacuum. Test data indicate that this phase is short, however, so that the proposed fugitive emission equations should be adequate for long term emission estimations.

The proposed open storage fugitive emissions factors have been developed for only one USEPA specified HAP, naphthalene, for the creosote industry. Emission factors for the HAPs, dibenzofuran, quinoline, or biphenyl, have not been developed.

DEVELOPMENT OF A TEMPERATURE CORRECTION FACTOR

The proposed AP-42 Section 10.8 document includes a Temperature Correction Factor (TCF) to be used in conjunction with the open storage fugitive emission factor in order to adjust emissions from test conditions to ambient air temperatures at the site to be examined. The proposed TCF is based on Antoine's vapor pressure equation and is as follows.

$$TCF = \exp\left[-11161 * \left(\frac{1}{(T+460)} - \frac{1}{540}\right)\right]$$

Equation 1

where:

TCF = temperature correction factor
T = average temperature in °F

This is precisely the equation **AquAeTer** developed as a TCF for naphthalene in *Calculated Emissions from Creoste-Treated Wood Products (Cross-Ties and Poles)* (1994). As vapor pressure coefficients are chemical specific for pure substances, it would be wholly inappropriate to use the presented TCF on anything other than naphthalene. Each of the other constituents examined for open storage fugitive emissions (i.e., acenaphthene, fluorene, phenanthrene, anthracene, acenaphthylene, fluoranthene, and pyrene) has its own individual vapor pressure/temperature relationship that is entirely different from that for naphthalene. To use a single Antoine's equation to approximate a temperature- vapor pressure relationship for all creosote components has no firm basis.

The need for a TCF to adjust for different site conditions is quite evident, however, simply using the Antoine's equation for naphthalene is not suitable. The best solution would be to adopt individual TCFs for each constituent PAH. A "composite" Antoine's equation may be possible for rough calculations if one assumed chemical ratios and pure substance behavior (i.e., no chemical component interactions regarding vapor pressure). Such an approach would be questionable at best due to the slight variability of creosote composition and the necessary assumptions seemingly in violation of physical/chemical principles.

It may be possible to develop a similar, less responsive TCF curve utilizing data from an American Wood Preservers' Association study [1] on the effects of temperature on the emission rates of creosote treated wood. In the study, emission rates for eight creosote constituents (indene, naphthalene, 2-methylnaphthalene, 1-methylnaphthalene, biphenyl, acenaphthene, dibenzofuran, and fluorene) were measured at different temperatures for identical creosote

[1] Ingram L. L., Jr., McGinnis, G. D., Prince, W. E., Gjovik, L. R., and Webb, D. A. 1984. The Effects of Temperature, Air Flow Rates, and Coatings Systems on the Vaporization of Creosote Components from Treated Wood. American Woo-Preservers' Association.

treated wood samples. The test data, shown in Table 1, indicate that the TCF for creosote as a whole may be more closely approximated by the equation;

$$TCF = \exp\left[-8531 * \left(\frac{1}{(T+460)} - \frac{1}{540}\right)\right]$$

Equation 2

where:

TCF = temperature correction factor
T = average temperature in °F

Also, it should be noted that the temperature for determining corrections of vapor pressure should be that of the chemical compound, which is more accurately approximated by the temperature of the wood than of the ambient air of the region. Ambient air temperatures can be substituted for the creosote temperatures for emissions calculations greater than one day, as long as, site conditions indicate that ambient air temperatures approximate wood temperatures (and therefore creosote constituent temperatures).

PROCESS EMISSION FACTORS

Emission factors for 15 creosote constituents and for total VOCs were developed for activities associated with each of four treatment processes: 1) conditioning by the Boulton process; 2) filling the retort with preservative; 3) returning the preservative to a holding tank from the retort; and 4) application of the vacuum cycle. Test measurements, or averages of multiple measurements, were used whenever possible. However, complete data for all four steps was available for none of the constituents of interest. In order to fill the voids in test data for a constituent during a particular process step, assumed ratios were calculated relating one process step to another for all constituents of interest. The ratios were formulated using the averages of known test measurements between processes. In this way average process step ratios were developed between: 1) the preservative filling/air release step and the conditioning by the Boulton Process; 2) the preservative return/blowback step and the conditioning by the Boulton Process; and 3) the vacuum cycle and the preservative filling/air release step. These values are shown in Table 2.

The methodology involved assumes constituents behave similarly throughout the wood treating cycle. However, the inconsistent nature of the ratios is evident from the test data.

Measured ratios range from 4 percent of the average value (fluorene during the preservative filling/air release step and the conditioning by the Boulton Process comparison) to 297 percent of the average value (anthracene during the preservative filling/air release step and the conditioning by the Boulton Process comparison).

Although the ratio relationships of the treatment processes are not very accurate, as indicated by the variability of the measured ratios that were used to obtain an average ratio, it may provide a reasonable first estimation of emissions when no data are available. MRI seems to recognize the frailty of the method by classifying the emission factors as poor (E rating).

Although the difficulty in determining emission rates when no single complete set of data for all components and all processes exists can be appreciated, it is of some concern that the chosen data sets (VOC data from Kerr-McGee Chemical LLC, Avoca and all constituent chemical data from KII, Susquehanna) and methodology leave the majority of the VOCs unaccounted for in the calculations. The proposed emission factors indicate roughly 2 percent of the VOCs are PAHs. Data provided by GERG indicates roughly 44.6 percent of creosote vapor emissions are comprised of 16-PAH compounds. Thus, the proposed emission calculations indicate that the roughly 44.6 percent of creosote vapor accounts for only 2 percent of VOC emissions (i.e., 100 percent of creosote vapor is less than 5 percent of the total VOC released). That leaves 95 percent of the VOC unaccounted for. It is known that the heat treating of wood releases volatiles from the wood that are not PAHs, but there is no guidance in the document as to whether this release has been addressed. The AWPI emissions estimation program calculates treatment process naphthalene emissions discharged through the condenser as 3 percent of VOC emissions. Non-treatment process naphthalene emissions are calculated as 42 percent of VOC emissions.

Although not immediately apparent, pollutant emissions from treatment processes are given in volume per mass multiplied by an annual production rate yielding an emission rate per year. This should be clearly indicated in the report.

OTHER NOTES OF INTEREST

Naphthalene was the only creosote constituent for which **AquAeTer** developed an emission factor. The emission factors for the other 3 HAPs were based on partial pressure ratios developed from the GERG data. A comparison of the naphthalene emission factor proposed by MRI to the equation developed by **AquAeTer** in *Calculated Emissions from Creoste-Treated Wood Products (Cross-Ties and Poles)* does not result in an increase in naphthalene emissions, if used with the USEPA approved AWPI calculational procedure. Emissions under the MRI equation range from 84 percent (at one day) to 98 percent (at 300 days) of the previous values.

USEPA identified a total of four HAP constituents, naphthalene, dibenzofuran, quinoline, and biphenyl, for reporting under Title V of the Clean Air Act and Amendments of 1990 by the wood treating industry. Of the eight PAHs reviewed in the MRI document, only one, naphthalene, is regulated as a HAP. Since the USEPA industry specified HAPs should be the

main thrust of emissions factor guidance provided by AP-42 to the wood treating industry, the proposed emission factor document is misdirected and incomplete as a reference for Title V air emission estimates from creosote wood treating. Guidance for the calculation of the USEPA specified HAP emissions is essential in Title V compliance.

TABLE 1. AVERAGE AIR CONCENTRATION OF VOLATILE CREOSOTE COMPONENTS (mg/m3)

COMPONENT	TEMPERATURE (°C)			
	20.3	26.1	32.5	37.8
Indene	10.7	12.5	13.6	16.7
Naphthalene	87.1	111	141.9	198.3
2-methylnaphthalene	13	17.8	25.3	36.7
1-methylnaphthalene	4.9	7	10	14.5
Bipheyl	1.3	1.9	3	4.3
Acenaphthene	2.3	3.6	6.6	9.4
Dibenzofuran	1.2	1.6	3.6	4.3
Fluorene	0.5	0.9	1.7	2.9
Total	121.0	156.3	205.7	287.1

Airflow = 1.0 L/min.
Rel. Humidity = 42.5% +/- 5%

TABLE 2. MEASURED PROCESS STEP RATIOS

POLLUTANT	PRESERVATIVE FILLING/AIR RELEASE TO CONDITIONING BY THE BOULTON PROCESS	PRESERVATIVE RETURN/BLOWBACK TO CONDITIONING BY THE BOULTON PROCESS	VACUUM CYCLE TO PRESERVATIVE FILLING/AIR RELEASE
VOC	-	0.0131	-
Acenaphthene	0.0140	-	-
Acenaphthylene	-	-	-
Anthracene	0.1000	-	0.35
Benzo(a)anthracene	-	-	-
Benzo(b)fluoranthene	-	-	-
Benzo(k)fluoranthene	-	-	-
Benzo(a)pyrene	-	-	-
Carbazole		-	-
Chrysene	0.0695	-	0.85
Dibenzofuran	0.0124	-	2.44
Fluoranthene	-	-	-
Fluorene	0.0013	-	4.69
Naphthalene	0.0084	-	4.84
Phenanthrene	0.0300	-	4.38
Pyrene	-	-	-
Average Value	0.0337	0.0131	2.93

MIDWEST RESEARCH INSTITUTE
Crossroads Corporate Park
Suite 100
5520 Dillard Road
Cary, NC 27511-9232
Telephone (919) 851-8181
FAX (919) 851-3232

Date: January 18, 1999

Subject: Fugitive Emissions From Black Tie Storage--AquAeTer Memo
Update and/or Revise Sections in AP-42
EPA Purchase Order No. 8D-1933-NANX
MRI Project 4945

From: Richard Marinshaw

To: Gene Crumpler
EPA/ESD (MD-13)
U. S. Environmental Protection Agency
Research Triangle Park, N.C. 27711

Attached is a copy of the December 28, 1994 memorandum form AquAeTer to American Wood Preservers Institute regarding how to estimate the surface of treated wood for fugitive emission calculations. My understanding from my telephone conversations with you on December 16 and 17, 1998, is that you generally concur with the approach and rationale presented in the attached memorandum. I will contact you in the next week to discuss this further. Thank you.

cc: Dallas Safriet, EFIG (MD-14)

optimizing environmental resources ♦ water, air, earth AquAeTer

December 28, 1994 940176-2

Mr. Martin Wikstrom
Tysons International Building
1945 Old Gallows Road, Suite 150
Vienna, Virginia 22182

RE: Responses to EPA Concerns on Black Tie Emissions Calculations

Dear Mr. Wikstrom:

This is a response to the critique that Mr. Gene Crumpler of the U.S. EPA sent to the AWPI concerning the report entitled "Calculated Emissions from Creosote-Treated Wood Products" by **AquAeTer, Inc.** This report, which was presented in Raleigh-Durham on October 13, 1994, detailed a mathematical model for calculating emissions from the storage of creosote-treated wood products such as ties and poles. The model was developed from emissions data collected at Oroville, California by Koppers on creosote-treated poles and from temperature data collected by **AquAeTer** on poles at the Koppers facility in Grenada, Mississippi and on cross ties at the Kerr-McGee facility in Indianapolis, Indiana. The emissions model was developed for the use by both tie and pole treating facilities.

COMMENT 1

"The one element of the calculation procedure with the high degree of uncertainty is the assumption that in the case of railroad ties, only the surface area on the outside of the bundles is emitting creosote components. With the stacking procedures used at Kerr-McGee presented in the document, only 8 percent of the total surface area of the treated ties is exposed, the remaining 92 percent is considered non-emitting. This assumption appears to be overly conservative leading to underestimation of emissions. Since the liquid creosote is apparently able to penetrate all surfaces of the ties during pressure treatment, then it would seem only logical that off gassing from inside the tie bundle must be possible. Resolution of this clear inconsistency is essential to obtaining our endorsement of the overall procedure."

P.O. Box 1187 ♦ Brentwood, TN ♦ 37024-1187 ♦ Phone (615) 373-8532 ♦ Fax (615) 373-8512

Response:

The one element of the calculation procedure that Mr. Crumpler expressed a concern for a high degree of uncertainty was the assumption that the exterior surface area is the only emission source. He made three statements about the uncertainty of our assumption. All three statements are related to the inconsistency identified by Mr. Crumpler, but each statement can be addressed in order to adequately respond to his concerns for uncertainty and potential underestimations of emissions. The comment statements and responses are highlighted below.

Comment Statement 1.

"With the stacking procedures used at Kerr-McGee presented in the document, only 8 percent of the total surface area of the treated ties is exposed, the remaining 92 percent is considered non-emitting."

Response No. 1

The resulting implication that only 8 percent of the total surface area of stacked black ties is emitting naphthalene and that the remaining 92 percent is considered non-emitting was unintentional.

A direct quote of the assumption from the document reads:

"Ties, bundles, and stacks are stored in such a way that only outside surfaces have the potential to emit."

The assumption can be phrased more clearly as:

"All treated ties have the *potential* to emit, and the only emission pathway for naphthalene contained in a treated tie, bundle, and stack is through the external surface area of the tie, bundle, or stack (including the small void spaces between the ties or poles)."

It is fully recognized that each and every creosote-treated tie in a stack or bundle has the potential to emit. Emissions from the inside surfaces, although very minor, have been accounted for by modifications to the surface areas and geometries and are explained in Response No. 2 of this letter.

As an example, consider one creosote-treated railroad tie which is several days old (e.g., subject to ambient thermodynamics rather than the higher retort temperature effects), and completely exposed to the atmosphere. A fraction of the naphthalene on the surface of this tie will be emitted to the atmosphere because a concentration, or driving force, exists between the

creosote preservative on the tie surface and the atmosphere and because naphthalene has a significant vapor pressure relative to other creosote components. From our field temperature measurements, we have determined that a significant temperature gradient no longer exists between the atmosphere, the outside tie surfaces, and the inside tie surfaces within 12 to 24 hours. Thus, the primary driving force for the emissions becomes the concentration gradient, which is described by the first-order kinetics equation developed from the Oroville data. Because this test was done at a constant wind velocity across the treated poles, the first-order rates developed for the model should be at a maximum.

As naphthalene is lost from the surface of the example tie, a state of concentration differential exists between the tie surface and the tie interior, providing a driving force for naphthalene to migrate from the interior of the tie towards the surface. As surface naphthalene is renewed by that of the interior, the tie will continue to emit naphthalene but at a steadily decreasing rate. The rate decreases because the initial mass of naphthalene gained by the tie during treatment is gradually reduced by emissions, which decreases the concentration gradient that acts as a driving force for emission.

Comment Statement 2.

"This assumption appears to be overly conservative leading to underestimation of emissions."

Response No. 2

The emissions estimates are not overly conservative because the emission rate determined by the model at any given time will be a maximum rate since the creosote-treated test pole data which form the basis of the model were at conditions which provided maximum potential to emit. Our field observations and dynamics of gases and vapors suggest that the outside surfaces emit differently from the inside surfaces. Finally, the assumed geometries of the stacks which determine the total emitting surface areas and therefore, the potential emissions, have been modified to reflect comments not only from Mr. Crumpler, but also comment from the AWPI members on the various geometries that are used. The net result was to increase the total surface area to ensure that the emission estimates are not underestimated for different geometries and for void spaces.

In the test model the creosote-treated test poles were not stacked; rather, they were continuously subjected to a 5 mph air flow over the completely exposed surfaces. Also, the poles were completely enclosed in a test vessel (tent), and were tested at an atypically warm ambient temperature of 80 °F (average) throughout the entire test. Thus, the kinetic data recorded from these test conditions represent maximum emissions, as it is highly unlikely to encounter these extreme test conditions on a continuous basis in realistic scenarios. The procedure, based on the test pole emission data, represents a maximum emission scenario.

If the example tie or pole is packed in the center of a rectangular bundle of treated ties, there would be some void space, although minor, between this tie and the surrounding ties. Any air surrounding the internal tie in this small void space would be saturated with naphthalene. The concentration differential between the tie surface and the surrounding voids, and therefore the driving force to emit, is greatly reduced until this void-space naphthalene is lost to the outside surface of the bundle. The driving force for an internal tie to emit will be much less than that of a tie directly exposed to the atmosphere, since this void space would be expected to become saturated, thereby reducing or stopping the potential for these interior surfaces to emit. For equivalent temperatures, the tie surface cannot emit into air saturated with naphthalene (or any other constituent). Any naphthalene emitted from the bundle must cross one of the rectangular planes or boundaries which comprise the outside surface area of the bundle, and would be first emitted by the ties exposed to the atmosphere or the small void spaces along this surface plane. The small void spaces between ties/poles have been assumed to have the same emission rate as the exposed tie surfaces.

In the assumption, two concentration gradients exist in the tie stack/bundle: one between the atmosphere and the outside surface of the stack/bundle, which is the greater of the two gradients; and the second between the outside surface of the stack and the interior air spaces/voids. This second and lesser concentration gradient between the interior ties and the external surface area is actually the rate-controlling step for emissions. The assumption of two concentration gradients is based on the capacity of a given volume of air to be saturated (as mentioned above) and our field observations.

The air between the ties, stacks, bundles is assumed to be saturated with naphthalene. A given volume of air has a definite saturation point that limits the volume that a chemical vapor (naphthalene) can occupy. The air spaces formed by wooden or metal slats placed between stacks (for fork truck access) are also assumed to be saturated with naphthalene and to emit at the same rate as the external tie surfaces. Voids formed by the spacing beams comprise less than five percent of the emitting surface area, and so do not significantly impact the model. The five percent of the surface area comprising void space is well within the accuracy and precision of the field test data and the precision to which the ties are stacked and measured.

To assume that an inside tie surface emits at the same rate as an outside tie surface assumes that the air inside the stacks does not have a higher concentration than the ambient atmosphere nor do the interior surfaces have higher concentrations than the outermost surfaces. It is reasonably sound to assume that the naphthalene concentrations on the inside surfaces of the stack are higher than the surface concentrations and this is supported from our field observations. These observations show that the ties on the inside of the stack are noticeably darker than the external ties; that is, the surfaces of the ties contain greater creosote concentrations after a period of time in the yard. If the internal and external emission rates were equal, which they are not, the color of the tie/pole surfaces throughout the bundle would be uniform, which it is not.

Further analysis of industry stacking practices indicates that assumed geometries could be modified to add more surface area in order to better depict the various stacking geometries used. Several AWPI members wanted to be more conservative so that a broader range to stacking geometries would reflect the model geometries. Therefore, the geometries of trams, bundles, layouts, and stacks have been adjusted to ensure that the emitting surface areas and associated emissions are not underestimated. The new geometries are graphically displayed in the attached drawings.

The assumed geometries for both ties and poles on trams have been changed from 5 emitting rectangular surfaces (no bottom emitting surface) to a more realistic cylindrical geometry that also accounts for the under (bottom) sides of the trams. The new cylindrical geometry of the tie tram stack example provides 183 ft^2 of emitting surface area; an approximate 7.3 percent increasing emitting surface area from the previous rectangular geometry of 171 ft^2. The new pole geometry provides an approximate 6.2 percent increase in emitting surface area.

The 100 percent pole layout geometry remains as a rectangle but now includes the under (bottom) side of the pole layout as part of the total emitting surface area. The inclusion of the bottom side of the pole layout practically doubles the emitting surface area. But, because the actual time that the poles spend in 100 percent layout is small, relative to yard storage time, the increase in annual emissions is not doubled.

The pole yard storage geometry has been changed from a trapezoid to a pyramid. Further study of pole yard stacking practices indicates that the pole yard stack geometries can be more accurately depicted as a pyramid. Additionally, due to the inconsistent sizes in pole stack risers used throughout the industry, the underside of the pole yard stacks has been added to the model's total emitting surface area. The pyramid shape provides an approximate 58 percent increase in emitting surface area over the previous trapezoid shape that did not include the under side.

The tie bundle and stack geometry remains rectangular but the tie stack emitting surface areas have been modified, based on comments from member of the AWPI, to account for emissions from the interior stack surfaces between the bundles. Two scenarios have been presented to represent the potential emissions from the stacks.

In the first scenario, a one foot wide emission plane has been added to the bottom of each bundle in the tie stack (a total of 3 per stack) as depicted in the drawing. Based on field observations and measurements, the very inner center surfaces of the stacks receive little or no wind velocity and experience very little temperature variation compared to the outer one foot edge of the interior surfaces and the outside surfaces. This scenario appears to be a more realistic representation of actual emissions. Therefore, to eliminate the concerns for an underestimation of emissions, it is reasonable to assume that a one foot plane on the inner stack surfaces also contributes to the total outside surface emissions. The outside surfaces (3 inches) of these one foot emission planes are accounted for by the overall geometry of the stack (i.e., the

total height). The addition of the one foot emission plane provides an 18.8 percent increase in the total tie stack surface area as depicted in the example.

The second scenario reflects the comments from the member of the AWPI and a worst case scenario which includes the surface area of the top and bottom of each tie bundle in the stack as depicted in the attached example. Adding the entire top and bottom surface areas of each bundle increases the stack surface area by 63.6 percent. The increase in emissions from the additional 5 surface areas provides an annual emission rate of 4.17 tpy; approximately 50 percent more than the initial emissions of 2.78 tpy. Table 1 in this letter shows a comparison of the surface areas and emissions from the suggested model stacking geometries.

Comment Statement 3.

"Since the liquid creosote is apparently able to penetrate all surfaces of the ties during pressure treatment, then it would seem only logical that off gassing from the inside the tie bundle must be possible."

Response No. 3

The behavior and dynamics of gases and vapors can be used to clarify the dynamics of the tie stacks. In the wood treatment process, liquid creosote penetrates into the tie/pole stacks under pressures up to five atmospheres and at elevated temperatures with the intention that the preservative be retained for decades. The actual cylinder pressure is as high as 150 psi or greater. The highest possible pressure gradient for naphthalene to emit to atmosphere is its partial pressure of less than 1 mm Hg (0.02 psi) at 100 °F. Thus the gradient in ambient conditions is about 10,000 times less than in the pressure cylinder. Additionally, the high treating pressure is provided time to equalize during the final vacuum phase of the treating cycle. Therefore, the behavior and dynamics of liquids under heat and pressure cannot be used to determine the dynamics of gases and vapors at ambient atmospheric conditions. The tie/pole surfaces inside the stack do emit, and the emissions do migrate to the outside surface of the bundle as previously explained. However, the emission rate and the dynamics by which these gases emit and migrate to the surface are not comparable to and should not be determined by the dynamics of the liquid creosote at retort conditions.

CONCLUSION

The assumption discussed above is believed to be a technically sound assumption that does not lead to an underestimation of emissions with a high degree of uncertainty. This assumption is based on relatively sound test data, field observations by **AquAeTer.** and the dynamics and behaviors of gases and vapors. The three supporting factors for the assumption as previously stated are:

1) The model is based on test data obtained under conditions which provide the treated wood surface a maximum potential to emit;

2) the void spaces between the stacks/bundles do emit but the total tie emission rates are controlled by the smaller rate existing between the interior void space and the outside surface and the void space comprises less than 5 percent of the total surface area; and

3) the dynamics and behavior of the gases and vapors migrating from the inside to the outside surface should not be compared to or determined by the dynamics of liquid creosote under retort conditions of high pressure and temperatures.

We believe that emissions from treated tie stacks are dependent on the surface area of the stacks and that prudent stacking practices can assist in minimizing emissions.

Mr. Crumpler had valid questions, many of which AWPI members have also raised. We have modified the stacking geometries so that more surface areas are available from pole and tie stacks for emitting naphthalene. The calculations, other than the stacking geometries, remain valid given the stacking geometry and assumptions used in the model. **AquAeTer** wishes to continue to work with the AWPI Clean Air Act Subcommittee and the U.S. EPA in developing a technically sound and mutually acceptable procedure for calculating emissions from creosote-treated wood storage yards. If you should have questions or need additional information, please call us at (615) 373-8532 or by FAX at (615) 373-8512.

Sincerely,

AquAeTer, Inc.

Michael R. Corn, P.E.
President

Douglas S. Smith, E.I.T.
Project Chemical Engineer

John C. Uptmor
Project Manager

I, Michael R. Corn, P.E., have signed and sealed with this letter the model applicability for predicting black tie storage yard emissions from creosote-treated poles and black ties, given the database and assumptions presented.

Michael R. Corn

Michael R. Corn, P.E.
President

Dec 28, 1994
Date

Michael R. Corn
Dec 28, 1994

GEOMETRY of POLE STACKS

① TRAM

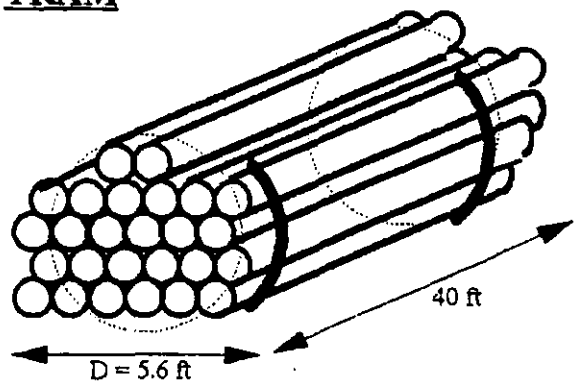

CYLINDRICAL SHAPE
24-28 POLES per TRAM
4-5 TRAMS per CHARGE
MAX EMISSION RATES ON TRAM

TIME ON TRAM 7-8 hours
TIME IN RAILTRUCK 16 hours
TOTAL TRAM SURFACE AREA =
753 ft²/TRAM

② 100 LAYOUT

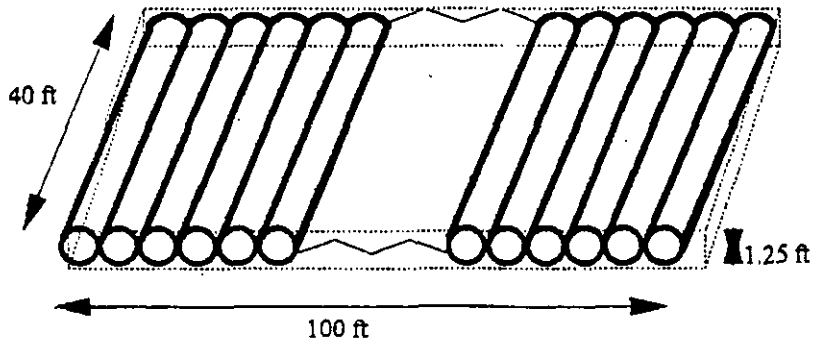

RECTANGULAR
100 POLES - 100% ASSAY
1 LAYOUT AREA

TIME IN LAYOUT MAX 36 hours
SHIPPED OFF-SITE
LAYOUT SURFACE AREA =
8,350 ft²/LAYOUT

③ YARD LAYOUT

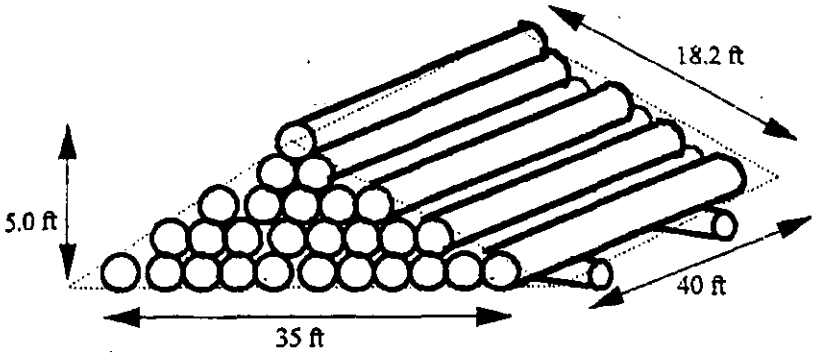

PYRAMIDAL SHAPE
80 POLES PER STACK
YARD AREA = 2,856 ft²/STACK

TIME IN YARD 3-4 months
MAXIMUM INVENTORY =
2,000 POLES

AquAeTer

GEOMETRY OF TIE STACKS

ONE TIE SURFACE AREA (7 in x 9 in x 8.5 ft) = 23.55 ft²

① TRAM

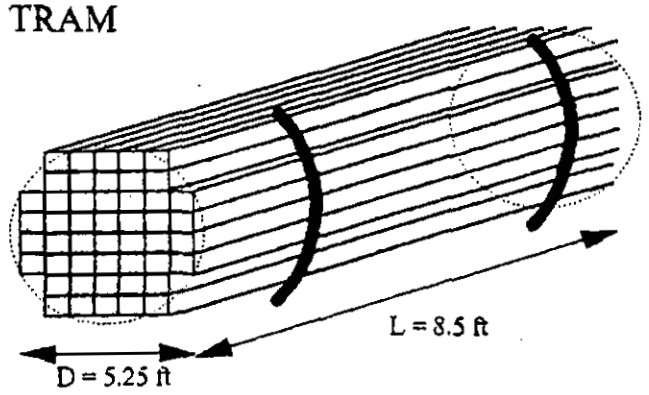

CYLINDRICAL SHAPE
46 TIES PER TRAM
17 TRAMS PER CHARGE
TOTAL TRAM SURFACE AREA = 183.5 ft²

② BUNDLE

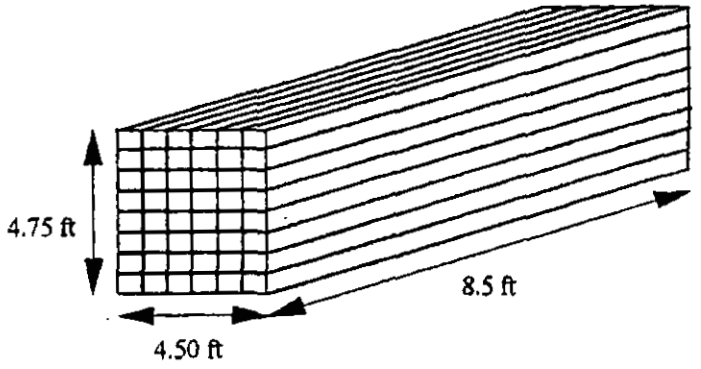

ASSUME 48 TIES = 1 BUNDLE
SURFACE AREA = 197.83 ft²

③ YARD LAYOUT -1

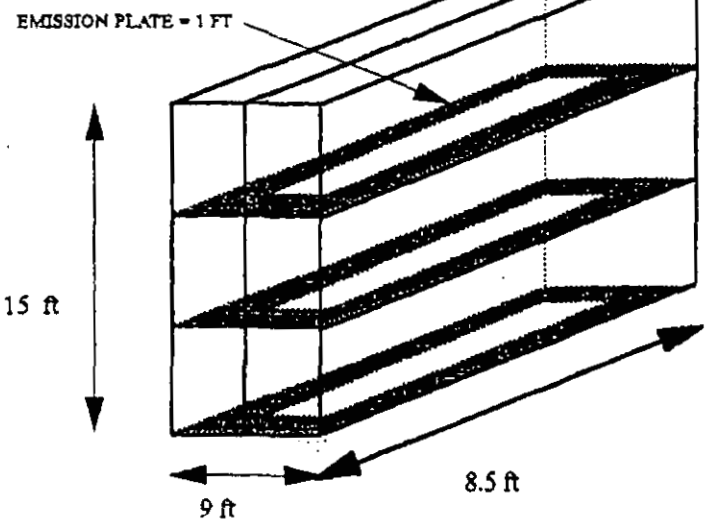

288 TIES IN 6 BUNDLES = 1 STACK
OUTSIDE SURFACE AREA = 601.5 ft²
3 - 1 ft INTERIOR EMISSION PLATES = 105 ft²
TOTAL MODEL SURFACE AREA = 706.5 ft²

SURFACE AREA OF 288 STACKED TIES = SURFACE AREA OF INDIVIDUAL TIES

$$= \frac{706.5\ ft^2}{(23.55\ ft^2)(288)} \quad \frac{706.5\ ft^2}{6{,}782.4} = 0.1$$

STACKING RESULTS IN 91% REDUCTION IN SURFACE AREA FROM SINGLE TIES

93,888 TIES PLACED IN 326 STACKS = 1 UNIT/MONTH PRODUCED
SURFACE AREA = SURFACE AREA OF ONE STACK * 326 STACKS
or
706.5 ft² * 326 STACKS = 230,319 ft²/UNIT

AquAeTer

GEOMETRY OF TIE STACKS

ONE TIE SURFACE AREA (7 in x 9 in x 8.5 ft) = 23.55 ft²

① TRAM

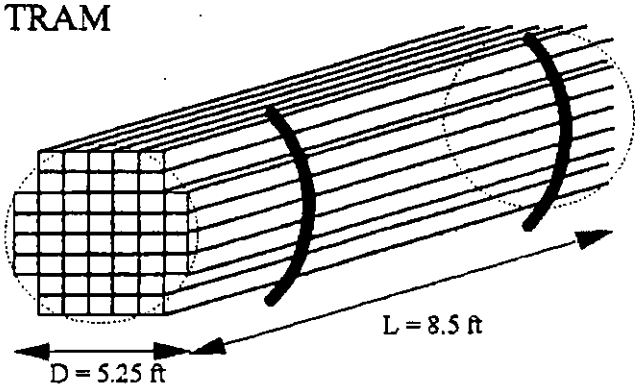

CYLINDRICAL SHAPE
46 TIES PER TRAM
17 TRAMS PER CHARGE
TOTAL TRAM SURFACE AREA = 183.5 ft²

② BUNDLE

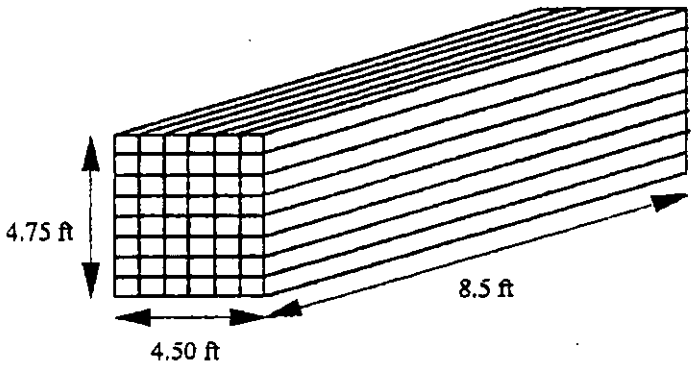

ASSUME 48 TIES = 1 BUNDLE
SURFACE AREA = 197.83 ft²

③ YARD LAYOUT -2

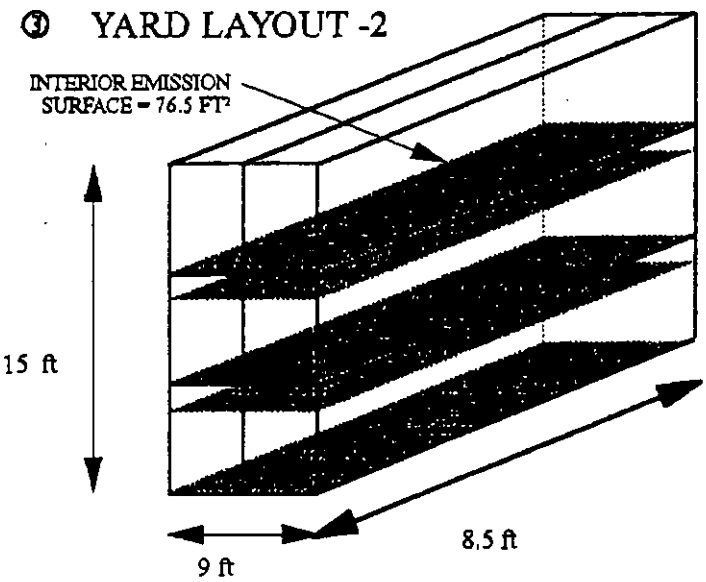

288 TIES IN 6 BUNDLES = 1 STACK
OUTSIDE SURFACE AREA = 601.5 ft²
5 - 1 ft INTERIOR EMISSION SURFACES = 382.5 ft²
TOTAL MODEL SURFACE AREA = 984 ft²

SURFACE AREA OF 288 STACKED TIES = SURFACE AREA OF INDIVIDUAL TIES

$$= \frac{984\ ft^2}{(23.55\ ft^2)(288)} \quad \frac{984\ ft^2}{6{,}782.4} = 0.15$$

STACKING RESULTS IN 85% REDUCTION IN SURFACE AREA FROM SINGLE TIES

93,888 TIES PLACED IN 326 STACKS = 1 UNIT/MONTH PRODUCED
SURFACE AREA = SURFACE AREA OF ONE STACK * 326 STACKS
or
984 ft² * 326 STACKS = 320,784 ft²/UNIT

AquAeTer

Table 1. Comparison of Surface Area and Emissions From Stack Geometry Modifications

Initial Surface Area of Stack (ft2)	601.5
Initial Total Yard Emissions (tpy)	2.78
Total Yard Inventory (ties)	469440
InitialPercent Total Yard S.S.A. Modeled	8

No. of Surfaces	Scenario Type	Increase In ft2	% Increase In S.S.A.	% Increase in Total Yard S.S.A.	% Total Yard S.S.A. Modeled	% Increase In Yard Emissions	Emissions tpy
3 - 1ft Emission Plates	Expected	105	17.4	2	10	13	3.19
5 - Whole Interior Surfaces	Worst Case	382.5	63.6	7	15	50	4.17

S.S.A. = Stack Surface Area (ft2)

f:\data\0176\task2\emiscomp.wk3

ESTIMATED NAPHTHALENE EMISSIONS FROM A BLACK POLE (CREOSOTE) STORAGE YARD

Facility	Koppers			
Location	Gautier, MS			
Max. Poles On Site	2,600			
Min. Poles On Site	2,600			
Poles/Unit	2,600			
S.A. of 10-Pole Stack	2,856 ft² (modified to planar surfaces)			
Diameter of Test Pole	11 in			
Length of Test Pole	40 ft			
No. of Test Poles	6 poles			
S.A. of Test Poles	699 ft²			
Emissions (mg/hr):	N1(t) =	13.104	* exp (	0.46681 * t), t <= 0.25 days
(Based on 6 poles with a	N2(t) =	36,697	* exp (	-7.01497 * t), 0.25 < t <= 1.0 day
699 ft² surface area)	N3(t) =	3.547	* exp (	-0.84358 * t), t > 1.0 day
Emissions (lb/lb-ft²):	N1(t) =	1.3708-03	* exp (	0.46681 * t), t <= 0.25 days
(Based on 6 poles with a	N2(t) =	2.777E-03	* exp (	-2.43497 * t), 0.25 < t <= 1.0 day
699 ft² surface area)	N3(t) =	2.537E-04	* exp (	-0.84358 * t), t > 1.0 day
Calculated 24-hr Average California Pole Tank Temperature =				86 °F
Temperature Correction Factor for Other Geographic Locations = exp[-11,161.13*(1/(T, °F+460)-1/(90+460))]				
Assumes 30 day/month				

Month	Black Pole Units on Site	No. of Black Poles	No. of 10-Pole Stacks	Total Surface Area (ft²)	Percent of Poles __ Months Old: 0 mo. (0-30 d)	1 mo. (30-60 d)	2 mo. (60-90 d)	3 mo. (90-120 d)	4 mo. (120-150 d)	Tram Layout: Surface Area (1,600 poles/mo) (ft²/month)	N1 Rate (lb/ft²) 0-0.25 d	100 Pole Layout: Surface Area (2,600 poles/mo) (ft²/month)	N2 Rate (lb/ft²) 0.25-1.0 d	N3 Rate (lb/ft²) 1.0-1.5 d	Yard Emissions * Percent of Poles __ Months Old: Rate N3(t) Emissions (lb naphthalene/ft² treated wood): 1.5-30 d	30-60 d	60-90 d	90-120 d	120-150 d	Tram Sum	100 Layout Sum	Yard Sum	Columbus, MS Average Temperature (°F)	Temperature Correction Factor	Total Naphthalene Emissions (lb)
1	1.0	2,600	33	92,820	33.3	33.3	33.3			81,575	3.63E-04	217,100	5.21E-04	1.20E-04	1.29E-03	3.82E-04	1.05E-04	–	–	3.63E-04	6.41E-04	1.78E-03	41.2	0.202	67
2	1.0	2,600	33	92,820	33.3	33.3	33.3			81,575	3.63E-04	217,100	5.21E-04	1.20E-04	1.29E-03	3.82E-04	1.05E-04	–	–	3.63E-04	6.41E-04	1.78E-03	44.9	0.238	79
3	1.0	2,600	33	92,820	33.3	33.3	33.3			81,575	3.63E-04	217,100	5.21E-04	1.20E-04	1.29E-03	3.82E-04	1.05E-04	–	–	3.63E-04	6.41E-04	1.78E-03	52.6	0.351	116
4	1.0	2,600	33	92,820	33.3	33.3	33.3			81,575	3.63E-04	217,100	5.21E-04	1.20E-04	1.29E-03	3.82E-04	1.05E-04	–	–	3.63E-04	6.41E-04	1.78E-03	62.6	0.503	166
5	1.0	2,600	33	92,820	33.3	33.3	33.3			81,575	3.63E-04	217,100	5.21E-04	1.20E-04	1.29E-03	3.82E-04	1.05E-04	–	–	3.63E-04	6.41E-04	1.78E-03	70.9	0.683	226
6	1.0	2,600	33	92,820	33.3	33.3	33.3			81,575	3.63E-04	217,100	5.21E-04	1.20E-04	1.29E-03	3.82E-04	1.05E-04	–	–	3.63E-04	6.41E-04	1.78E-03	77.7	0.915	303
7	1.0	2,600	33	92,820	33.3	33.3	33.3			81,575	3.63E-04	217,100	5.21E-04	1.20E-04	1.29E-03	3.82E-04	1.05E-04	–	–	3.63E-04	6.41E-04	1.78E-03	80.9	1.035	343
8	1.0	2,600	33	92,820	33.3	33.3	33.3			81,575	3.63E-04	217,100	5.21E-04	1.20E-04	1.29E-03	3.82E-04	1.05E-04	–	–	3.63E-04	6.41E-04	1.78E-03	80.1	1.004	333
9	1.0	2,600	33	92,820	33.3	33.3	33.3			81,575	3.63E-04	217,100	5.21E-04	1.20E-04	1.29E-03	3.82E-04	1.05E-04	–	–	3.63E-04	6.41E-04	1.78E-03	74.1	0.796	264
10	1.0	2,600	33	92,820	33.3	33.3	33.3			81,575	3.63E-04	217,100	5.21E-04	1.20E-04	1.29E-03	3.82E-04	1.05E-04	–	–	3.63E-04	6.41E-04	1.78E-03	62.3	0.496	166
11	1.0	2,600	33	92,820	33.3	33.3	33.3			81,575	3.63E-04	217,100	5.21E-04	1.20E-04	1.29E-03	3.82E-04	1.05E-04	–	–	3.63E-04	6.41E-04	1.78E-03	51.1	0.311	104
12	1.0	2,600	33	92,820	33.3	33.3	33.3			81,575	3.63E-04	217,100	5.21E-04	1.20E-04	1.29E-03	3.82E-04	1.05E-04	–	–	3.63E-04	6.41E-04	1.78E-03	44.1	0.229	77
Annual Production:		31,200 poles/yr													Emissions for maximum on-site storage of 7800 poles in:									Total (lb/yr)	2,251
10:32 AM 28-Dec-98		0.750 million ft³/yr																						Total (ton/yr)	1.13

[*disc/0117/naphpole2.wk3]

ESTIMATED NAPHTHALENE EMISSIONS FROM A BLACK TIE STORAGE YARD

Facility	Kerr-McGee Chemical Corporation					
Location	Avoca, PA					
Max. Ties On Site	469,440	(Maximum Scenario - On-site Maximum is Normally 200,000 ties.)				
Min. Ties On Site	93,888					
Ties/Unit	93,888					
S.A. of Six 48-tie Bundles	984.0	ft²				
Diameter of Test Pole	11	in				
Length of Test Pole	40	ft				
No. of Test Poles	6	poles				
S.A. of Test Poles	699	ft²				
Emissions (mg/hr)	N1(t) =	19,104	* exp (	0.46683	* t), t <= 0.25 days	
(Based on 6 poles with a	N2(t) =	36,697	* exp (	-2.43497	* t), 0.25 < t <= 1.0 day	
699 ft² surface area)	N3(t) =	3,347	* exp (	-0.04358	* t), t > 1.0 day	
Emissions (lb/day/ft²):	N1(t) =	1.370E-03	* exp (	0.46683	* t), t <= 0.25 days	
(Based on 6 poles with a	N2(t) =	2.777E-03	* exp (	-2.43497	* t), 0.25 < t <= 1.0 day	
699 ft² surface area)	N3(t) =	2.533E-04	* exp (	-0.04358	* t), t > 1.0 day	

Calculated 24-hr Average California Pole Test Temperature = 80 °F

Temperature Correction Factor for Other Geographic Locations = exp(-11,161.25*(1/(T, °F+460)-1/(80+460)))

Assumes 30 days/month

Month	Black Tie Units on Site	No. of Black Ties	No. of 288-Tie Stacks	Total Yard Surface Area (ft²)	Percent of Ties __ Months Old: 0 mo. (0-30 d)	1 mo. (30-60 d)	2 mo. (60-90 d)	3 mo. (90-120 d)	4 mo. (120-150 d)	Tram Emissions: Surface Area (93,888 ties/mo) (ft²/month)	Kt Rate (lb/ft²) 0-0.25 d	N2 Rate (lb/ft²) 0.25-1.0 d	Yard Emissions * Percent of Ties __ Months Old: Rate N3(t) Emissions (lb naphthalene/ft² treated surface area) 1.0-30 d	30-60 d	60-90 d	90-120 d	120-150 d	Tram Sum	Yard Sum	Scranton, PA Average Temperature (°F)	Temperature Correction Factor	Total Naphthalene Emissions (lb)
1	3	281,664	979	962,333	33.3	33.3	33.3			374,531	3.63E-04	5.21E-04	1.33E-03	9.87E-04	1.03E-04			8.84E-04	1.82E-03	23.2	0.097	201
2	4	375,552	1,304	1,283,136	25.0	25.0	25.0	25.0		374,531	3.63E-04	5.21E-04	9.98E-04	2.87E-04	7.76E-05	2.10E-05		8.84E-04	1.38E-03	26.9	0.104	220
3	5	469,440	1,630	1,603,920	20.0	20.0	20.0	20.0	20.0	374,531	3.63E-04	5.21E-04	7.99E-04	2.29E-04	6.21E-05	1.68E-05	4.54E-06	8.84E-04	1.11E-03	36.1	0.161	339
4	4.43	415,790	1,444	1,420,615	22.6	22.6	22.6	22.6	9.7	374,531	3.63E-04	5.21E-04	9.02E-04	2.58E-04	7.01E-05	1.90E-05	2.20E-06	8.84E-04	1.25E-03	48.3	0.276	581
5	3.86	362,139	1,257	1,237,310	25.9	25.9	25.9	22.2		374,531	3.63E-04	5.21E-04	1.04E-03	2.97E-04	8.05E-05	1.87E-05		8.84E-04	1.43E-03	58.6	0.426	896
6	3.29	308,489	1,071	1,054,005	30.4	30.4	30.4	8.7		374,531	3.63E-04	5.21E-04	1.22E-03	3.49E-04	9.45E-05	7.30E-06		8.84E-04	1.67E-03	67.4	0.610	1,274
7	2.71	254,839	885	870,699	36.8	36.8	26.3			374,531	3.63E-04	5.21E-04	1.47E-03	4.23E-04	8.17E-05			8.84E-04	1.98E-03	71.8	0.727	1,491
8	2.14	201,189	699	687,394	46.7	46.7	6.7			374,531	3.63E-04	5.21E-04	1.86E-03	5.35E-04	2.07E-05			8.84E-04	2.42E-03	70.0	0.677	1,350
9	1.57	147,538	512	504,089	63.6	36.4				374,531	3.63E-04	5.21E-04	2.54E-03	4.17E-04				8.84E-04	2.96E-03	62.8	0.507	923
10	1	93,888	326	320,784	100.0					374,531	3.63E-04	5.21E-04	3.99E-03					8.84E-04	3.99E-03	51.7	0.319	514
11	1	93,888	326	320,784	100.0					374,531	3.63E-04	5.21E-04	3.99E-03					8.84E-04	3.99E-03	40.9	0.199	321
12	2	187,776	652	641,568	50.0	50.0				374,531	3.63E-04	5.21E-04	2.00E-03	5.74E-04				8.84E-04	2.57E-03	29.7	0.120	237

Annual Production: 1.127 million ties/yr

11-10-04 29-Dec-94 4.190 million ft²/yr

Emissions for maximum on-site storage of 469440 ties is: Total (lb/yr) 5,348

Total (tons/yr) 4.17

Edmd2117Kerr-tie2.wk3

UNITED STATES ENVIRONMENTAL PROTECTION AGENCY
Office of Air Quality Planning and Standards
Research Triangle Park, North Carolina 27711

NOV 04 1994

Mr. Martin Wickstrom
Manager, Regulatory Affairs
American Wood Preservers Institute
1945 Old Gallows Road, Suite 150
Vienna, Virginia 22182

Dear Mr. Wickstrom:

I am responding to the report titled "Calculated Emissions From Creosote-Treated Wood Products" prepared by AquAeTer and presented at our meeting in Research Triangle Park on October 13, 1994. First of all, I want to say that Mike Korn and his people have done an excellent job in developing a creditable procedure for calculating potential emissions from the storage of creosote treated wood products based on the testing conducted by Kopper's at their Orville, California, facility.

I have reviewed the calculation procedures used and they appear to be sound and in line with accepted engineering assumptions and practice. The methodology corrects the emission rates at various ages for ambient temperatures and for the conditions of storage, i.e., stacking, expressed as mg/hour-square foot of surface determined at Orville. The new work performed by AquAeTer in which surface and interior temperatures of treated wood were measured, lends credibility to some of the Orville data that was previously questionable.

The one element of the calculation procedure with the high degree of uncertainty is the assumption that in the case of railroad ties, only the surface area on the outside of the bundles is emitting creosote components. With the stacking procedures used at Kerr-McGee presented in the document, only 8 percent of the total surface area of the treated ties is exposed, the remaining 92 percent is considered non-emitting. This assumption appears to be overly conservative leading to underestimation of emissions. Since the liquid creosote is apparently able to penetrate all surfaces of the ties during pressure treatment, then it would seem only logical that off gassing from inside the tie bundle must be possible. Resolution of this clear inconsistency is essential to obtaining our endorsement of the overall procedure.

A resolution of this problem might be found through further engineering analysis of the situation or it may be best resolved by some field test work along the lines of the Orville experimental design. Additional information about stacking practices at other creosote treaters may also be helpful in better understanding how typical the Kerr-McGee storage practices are. Let me restate that it is our desire to work with you in developing a mutually acceptable procedure for calculating potential air emissions from the storage of creosote-treated wood products.

Please call me at (919) 541-0881 to discuss any of the above.

Sincerely,

Eugene P. Crumpler, Jr.
Minerals and Inorganic Chemicals Group
Emission Standards Division

ESTIMATION OF FUGITIVE EMISSIONS FROM OPEN STORAGE OF CREOSOTE TREATED WOOD PRODUCTS

Midwest Research Institute (MRI) utilizes the identical methodology introduced by **AquAeTer** in *Calculated Emissions from Creoste-Treated Wood Products (Cross-Ties and Poles)* (1994) for the estimation of fugitive emissions during open storage of treated wood products. The emissions are approximated by multi-phase exponential curves regressionally fit to data obtained during a 1990 Koppers Industries, Inc. (KII) emissions test at the Oroville, California facility. The original equation was a three curve approximation of naphthalene emissions. The newly proposed equation set differs from previous versions as the data set has been adjusted for corrected sampling times (as per a memo from Steve Smith, KII to Rick Marinshaw, MRI dated July 1997) and simplified from a three curve equation to a two curve equation. Also, the proposed fugitive emissions equations have been expanded to include additional polycyclic aromatic hydrocarbon (PAH) constituents, but do not include 3 of the 4 specified USEPA HAPs.

Although MRI has given acceptable two-stage air emission factors from stored treated wood, a primary component of the emission calculation accepted by USEPA has been omitted. The treated wood storage yard emission factors are multiplied by square footage of wood treated to arrive at a total emissions estimate. However, the manner in which treated wood products are stacked in open storage or stacking geometry is not considered by the proposed emission factors. Stacking geometry greatly limits the surface area available for emissions from treated wood in a storage yard. This mitigates the amount of emissions substantially and this approach has been technically accepted by the USEPA. The proposed fugitive emission factors result in a gross overestimation of total emissions from treated wood storage if based solely on total volume of wood, converted to square footage, treated per year. Additionally, there is some concern with the temperature correction factor (TCF) presented in the MRI document as described below.

Review of the proposed emission equations indicates sound physical and mathematical foundations are observed and obeyed throughout the development. The simplification of the open storage fugitive emissions equations to a two curve approximation will underestimate initial emission rates and quantities because it ignores the initial temperature driven emission phase. During this phase, freshly treated wood rises in temperature upon removal from the retort as it is no longer subject to an applied vacuum. Test data indicate that this phase is short, however, so that the proposed fugitive emission equations should be adequate for long term emission estimations.

The proposed open storage fugitive emissions factors have been developed for only one USEPA specified HAP, naphthalene, for the creosote industry. Emission factors for the HAPs, dibenzofuran, quinoline, or biphenyl, have not been developed.

DEVELOPMENT OF A TEMPERATURE CORRECTION FACTOR

The proposed AP-42 Section 10.8 document includes a Temperature Correction Factor (TCF) to be used in conjunction with the open storage fugitive emission factor in order to adjust emissions from test conditions to ambient air temperatures at the site to be examined. The proposed TCF is based on Antoine's vapor pressure equation and is as follows.

$$TCF = \exp\left[-11161 * \left(\frac{1}{(T+460)} - \frac{1}{540}\right)\right]$$

Equation 1

where:

TCF = temperature correction factor
T = average temperature in oF

This is precisely the equation **AquAeTer** developed as a TCF for naphthalene in *Calculated Emissions from Creoste-Treated Wood Products (Cross-Ties and Poles)* (1994). As vapor pressure coefficients are chemical specific for pure substances, it would be wholly inappropriate to use the presented TCF on anything other than naphthalene. Each of the other constituents examined for open storage fugitive emissions (i.e., acenaphthene, fluorene, phenanthrene, anthracene, acenaphthylene, fluoranthene, and pyrene) has its own individual vapor pressure/temperature relationship that is entirely different from that for naphthalene. To use a single Antoine's equation to approximate a temperature- vapor pressure relationship for all creosote components has no firm basis.

The need for a TCF to adjust for different site conditions is quite evident, however, simply using the Antoine's equation for naphthalene is not suitable. The best solution would be to adopt individual TCFs for each constituent PAH. A "composite" Antoine's equation may be possible for rough calculations if one assumed chemical ratios and pure substance behavior (i.e., no chemical component interactions regarding vapor pressure). Such an approach would be questionable at best due to the slight variability of creosote composition and the necessary assumptions seemingly in violation of physical/chemical principles.

It may be possible to develop a similar, less responsive TCF curve utilizing data from an American Wood Preservers' Association study on the effects of temperature on the emission rates of creosote treated wood. In the study, emission rates for eight creosote constituents (indene, naphthalene, 2-methylnaphthalene, 1-methylnaphthalene, biphenyl, acenaphthene, dibenzofuran, and fluorene) were measured at different temperatures for

identical creosote treated wood samples. The test data, shown in Table 1, indicate that the TCF for creosote as a whole may be more closely approximated by the equation;

$$TCF = \exp\left[-8531*\left(\frac{1}{(T+460)} - \frac{1}{540}\right)\right]$$

Equation 2

where:

TCF = temperature correction factor
T = average temperature in oF

Also, it should be noted that the temperature for determining corrections of vapor pressure should be that of the chemical compound, which is more accurately approximated by the temperature of the wood than of the ambient air of the region. Ambient air temperatures can be substituted for the creosote temperatures for emissions calculations greater than one day, as long as, site conditions indicate that ambient air temperatures approximate wood temperatures (and therefore creosote constituent temperatures).

PROCESS EMISSION FACTORS

Emission factors for 15 creosote constituents and for total VOCs were developed for activities associated with each of four treatment processes: **1)** conditioning by the Boulton process; **2)** filling the retort with preservative; **3)** returning the preservative to a holding tank from the retort; and **4)** application of the vacuum cycle. Test measurements, or averages of multiple measurements, were used whenever possible. However, complete data for all four steps was available for none of the constituents of interest. In order to fill the voids in test data for a constituent during a particular process step, assumed ratios were calculated relating one process step to another for all constituents of interest. The ratios were formulated using the averages of known test measurements between processes. In this way average process step ratios were developed between: **1)** the preservative filling/air release step and the conditioning

by the Boulton Process; **2)** the preservative return/blowback step and the conditioning by the Boulton Process; and **3)** the vacuum cycle and the preservative filling/air release step. These values are shown in Table 2.

The methodology involved assumes constituents behave similarly throughout the wood treating cycle. However, the inconsistent nature of the ratios is evident from the test data. Measured ratios range from 4 percent of the average value (fluorene during the preservative filling/air release step and the conditioning by the Boulton Process comparison) to 297 percent of the average value (anthracene during the preservative filling/air release step and the conditioning by the Boulton Process comparison).

Although the ratio relationships of the treatment processes are not very accurate, as indicated by the variability of the measured ratios that were used to obtain an average ratio, it may provide a reasonable first estimation of emissions when no data are available. MRI seems to recognize the frailty of the method by classifying the emission factors as poor (E rating).

Although the difficulty in determining emission rates when no single complete set of data for all components and all processes exists can be appreciated, it is of some concern that the chosen data sets (VOC data from Kerr-McGee Chemical LLC, Avoca and all constituent chemical data from KII, Susquehanna) and methodology leave the majority of the VOCs unaccounted for in the calculations. The proposed emission factors indicate roughly 2 percent of the VOCs are PAHs. Data provided by GERG indicates roughly 44.6 percent of creosote vapor emissions are comprised of 16-PAH compounds. Thus, the proposed emission calculations indicate that the roughly 44.6 percent of creosote vapor accounts for only 2 percent of VOC emissions (i.e., 100 percent of creosote vapor is less than 5 percent of the total VOC released). That leaves 95 percent of the VOC unaccounted for. It is known that the heat treating of wood releases volatiles from the wood that are not PAHs, but there is no guidance in the document as to whether this release has been addressed. The AWPI emissions estimation program calculates treatment process naphthalene emissions discharged through the condenser as 3 percent of VOC emissions. Non-treatment process naphthalene emissions are calculated as 42 percent of VOC emissions.

Although not immediately apparent, pollutant emissions from treatment processes are given in volume per mass multiplied by an annual production rate yielding an emission rate per year. This should be clearly indicated in the report.

OTHER NOTES OF INTEREST

Naphthalene was the only creosote constituent for which **AquAeTer** developed an emission factor. The emission factors for the other 3 HAPs were based on partial pressure ratios developed from the GERG data. A comparison of the naphthalene emission factor proposed by MRI to the equation developed by **AquAeTer** in *Calculated Emissions from Creoste-Treated Wood Products (Cross-Ties and Poles)* does not result in an increase in naphthalene emissions, if used with the USEPA approved AWPI calculational procedure. Emissions under the MRI equation range from 84 percent (at one day) to 98 percent (at 300

days) of the previous values.

USEPA identified a total of four HAP constituents, naphthalene, dibenzofuran, quinoline, and biphenyl, for reporting under Title V of the Clean Air Act and Amendments of 1990 by the wood treating industry. Of the eight PAHs reviewed in the MRI document, only one, naphthalene, is regulated as a HAP. Since the USEPA industry specified HAPs should be the main thrust of emissions factor guidance provided by AP-42 to the wood treating industry, the proposed emission factor document is misdirected and incomplete as a reference for Title V air emission estimates from creosote wood treating. Guidance for the calculation of the USEPA specified HAP emissions is essential in Title V compliance.

IDAHO DEPARTMENT
OF HEALTH AND WELFARE
DIVISION OF
ENVIRONMENTAL QUALITY

1410 North Hilton, Statehouse Mail, Boise, ID 83720-9000, (208) 334-0502

Cecil D. Andrus, Governor

TRANSMITTAL COVER SHEET

FAX NUMBER (208) 334-0417
3RD FLOOR

DATE: DEC 28, 1994

TO: DALLAS SAFRIET

PHONE #: ( )

FAX #: (919) 541-0684

FROM: DARRIN MEHR
1410 North Hilton
Boise, ID 83720-9000

PHONE #: (208) 334-5898

DOCUMENT DESCRIPTION: EMISSION INVENTORY - WOOD PRODUCTS

TOTAL NUMBER OF PAGES (INCLUDING THIS COVER SHEET): 12

IF YOU DO NOT RECEIVE ENTIRE FAX CALL: (208) 334 - 5841

COMMENTS:

IDAHO DEPARTMENT
OF HEALTH AND WELFARE

DIVISION OF
ENVIRONMENTAL QUALITY

1410 North Hilton, Statehouse Mail, Boise, ID 83720-9000, (208) 334-0502

Cecil D. Andrus, Governor

December 28, 1994

Dallas Safriet
Emission Factors Section (Wood Products Industry)
Office of Air Quality Planning and Standards
U.S. Environmental Protection Agency
Research Triangle Park, North Carolina 27711

Dear Mr. Safriet:

I am contacting you in regards to a wood products industry emission inventory topic. I am attempting to quantify fugitive condensible particulate matter emissions from a wood treating facility located within a PM_{10} nonattainment area. The omission of this emission source was identified as a deficiency in the Sandpoint, Idaho nonattainment area PM_{10} emission inventory and industrial source control strategy (see attached memo, Ann Pontius, EPA Region X).

The facility uses a dip tank process where peeled, air seasoned poles are lowered into one of three tanks containing a 5% pentachlorophenol/95% light oil (comparable to No. 2 diesel) mixture kept at 180°F. Fugitive emissions are expected from the surface of the penta in the tanks and from the poles after they are removed from the treatment tanks to cool on drip pads.

I am also enclosing a copy of a letter that I sent to Dave Bray of Region X in which I requested guidance from EPA Region X in quantifying the condensible PM_{10} emissions from this source. In addition to EPA staff, I have contacted various air pollution control agencies in Washington state. To date, I have not received any information to aid my attempt to quantify these emissions.

Please contact me at (208) 334-5898 for any comments or questions that you may have. Any assistance that you may offer would be greatly appreciated.

Sincerely,

Darrin Mehr

Darrin Mehr, Air Quality Engineer
Operating Permits Bureau
Permits and Enforcement

Attachments

DM: jd--c:\...\darrin\letters\pcat_cpa.ltr

cc: Source File
COF 1.1

A
703-893-4005
Martin Wikstrom
American Wood Preservers Institute

UNITED STATES ENVIRONMENTAL PROTECTION AGENCY
REGION 10
1200 Sixth Avenue
Seattle, Washington 98101
August 10, 1994

Reply To
Attn Of: AT-082

MEMORANDUM

SUBJECT: Review of Four "Tier II" (State) Operating Permits for the Sandpoint Area to Support the SIP PM_{10} Control Strategy

FROM: Ann Pontius, Chief
Air Compliance and Permitting Section, ARB

TO: Mike Bussell, Chief
Air Programs Development Section, ARB

My staff has reviewed the proposed "Tier II" (State) operating permits for four sources in the Sandpoint PM_{10} nonattainment area and offer the following comments and suggestions for your consideration in drafting the Agency's official comments to the IDEQ:

First, in general, these permits need a lot of work before they would be acceptable as a SIP control strategy from both an enforceability aspect as well as appropriate emission limitations. The permits propose numerous annual emission limits which are not enforceable as a practical matter. Furthermore, they propose several "average" standards and limitations which do not specify the averaging periods. More importantly, the critical "winter" emission limitations are expressed in terms of averages rather than maximum daily limits, thereby allowing the sources to emit more on a winter day that they can during the summer.

Proposed Permit for L.D. McFarland Company

(1) The process description notes that the wigwam burner is used to store woodwaste only and the technical analysis document notes that the burner has not been used to combust woodwaste for "several years". As such, the emissions from the wigwam burner do not appear to be included in the baseline inventory nor does the design value reflect the emissions from this source. However, the permit appears to allow the company to operate the wigwam burner as a woodwaste incinerator. In order for IDEQ to allow the wigwam burner to operate during the winter months (or at all for that matter) it will need to specifically demonstrate that the ambient standards can still be attained and maintained with these additional emissions. To do this, the design value(s) need to be

Printed on Recycled Paper

adjusted upwards to reflect the current allowable emissions from the wigwam burner and the dispersion modeling will have to demonstrate attainment and maintenance using the future allowable emissions from the source.

(2) The permit needs to include emission limitations which represent reasonably available control technology for the log peeling process area. Such emission limitations need to in the form of concentration standards (e.g., grains per dry standard cubic foot) or performance standards (e.g., pounds of PM_{10} per tons of woodwaste) for the control equipment. This will ensure that the control equipment is maintained and operated in accordance to its design characteristics regardless of operational rate of the source.

(3) The "ton per year" emission limitations are not practically enforceable nor are they needed to ensure attainment and maintenance of the PM_{10} standards. If necessary to reduce emissions on an annual basis to attain and maintain the annual PM_{10} standard, operational limits (e.g., maximum hours the source can operate, maximum amount of woodwaste or logs processed) should be established in addition to any short-term mass emission limits. Note that there is no need to establish annual limits unless there is a need to reduce annual emissions in order to meet the annual PM_{10} ambient standard.

(4) The "winter" throughput limitations are written as a "high average tonnage throughput per day" or "high average cubic feet of natural gas throughput per day" which are actually less stringent than the "summer" throughput limit because it allows the source to "average" low throughput days with high throughput days. Furthermore, because the permit fails to specify the averaging period, this limit is both unenforceable and inadequate to limit emissions on a daily basis to those levels used in the attainment demonstration. Although it is legally acceptable for IDEQ to establish different emission limitations for the "summer" and "winter" periods, the limits must be in the form of a maximum daily limit and not an average daily limit. Furthermore, the modeling demonstration must ensure that the tighter "winter" limit is effective during the entire period of the year for which there is a potential to violate the ambient standards. That is, IDEQ cannot base the time period simply on the fact that the recorded violations in recent years all occurred during the period of November 1 to March 30, but must evaluate the potential for violations before or after that period using long-term meteorological records. In addition, since IDEQ is also submitting new emission limits for the "summer" period, it must also submit a modeling demonstration for the "summer" period which shows the adequacy of the "summer" emission limits.

(5) It is highly unlikely that the wigwam burner could actually be operated in compliance with the grain loading and opacity standards. As such, this permit needs to include additional monitoring and reporting requirements which would apply should the company decide to operate the wigwam burner as a woodwaste incinerator. Specifically, the permit needs to require the installation and operation of continuous opacity monitors and the reporting of data from such monitors.

(6) If the wigwam burner is allowed to operate as a woodwaste incinerator (as opposed to a woodwaste storage facility), then the permit needs to ensure that RACT is employed for control of particulate emissions. As currently drafted, the wigwam burner would be allowed to operate without any controls for particulate removal.

(7) The particulate emission limits for concentration (grains per dry standard cubic foot) for the wigwam burner and natural gas fired boiler need to include an averaging time or specifically indicate how many source test runs are averaged to determine compliance.

(8) Unless the modeling demonstration has specifically included the emissions during startup of the wigwam burner at 100% opacity, the permit needs to include an appropriate opacity limit for the wigwam burner that applies during startup.

(9) It is not clear why the throughput log for the wigwam burner records the amount of waste produced by "peeling of logs" while the throughput log for the log peeling process area records the amount of waste produced by "peeling and framing of logs". Is there a way for the operator to know where the waste is coming from that is stored or combusted in the wigwam burner?

(10) Emission limitations for fugitive emission sources written in terms of pounds per hour or tons per year are unenforceable as a practical manner. Rather than attempting to limit fugitive emissions with numerical standards, the permit should simply impose operational or work practice standards which are verifiable and therefore practically enforceable. As such, the operating requirements proposed herein, combined with an appropriate opacity limitation (e.g., no visible emissions from the log peeling storage piles) will suffice.

(11) Unless there is an independent need to establish annual emission limitations, we recommend that Appendix A be revised to include only short-term (hourly) mass emission limitations for PM_{10} and the other pollutants. Furthermore, the mass emission limits for the "winter" period need to be in the form of "maximum" 24-hour emissions, not "averages".

(12) The operating schedule limitations in Appendix B will do nothing to lower the maximum 24-hour emissions during the "winter" period since they still allow the source to operate the same number of hours per day (with the one exception of the "loader, pile to burner"). The reduction in the number of days per week that units are allowed to operate effectively will only result in the source not operating on weekends.

(13) General provision "H." needs to be revised to require that the permit be renewed or else the source may not operate. The lower emission limitations upon which the SIP relies to attain and maintain the PM_{10} standards may not be allowed to expire.

(14) The permit does not establish any emission limits for the treatment tanks. These tanks could be a significant source of condensible particulates (VOC aerosols) or secondary particulates since they contain primarily oil at 180°F.

Proposed Permit for Louisiana Pacific Corporation - Sandpoint

(1) Comments #3, 7, 10, 11 and 13 for the L.D. McFarland facility also apply to this proposed permit.

(2) The testing requirements for the woodwaste boiler must specify a particular test method and cannot allow the Department to approve an alterative method without first revising the SIP. The Department can approve certain changes to the specified methods per General Provision F, but it cannot approve an alternative method.

(3) As discussed in comment #2 on the L.D. McFarland facility, the permit needs to establish performance standards for the Cyclones and Pneumatic Conveyance that represent RACT.

(4) As discussed in comments #4 and 11 on the L.D. McFarland facility, the PM_{10} winter season emission limits in Table 2 must be established as a 24-hour maximum emissions, and not an average, in order to ensure that maximum daily emissions are in fact less than they could be otherwise.

(5) As discussed in comment #4 on the L.D. McFarland facility, the "winter" period maximum throughput values need to be a daily maximum, and not an average.

(6) The permit does not include any emission limitations for the drying kilns which are typically a large source of particulate emissions. Particulates are entrained from the lumber itself and condensible particulates are produced as a result of evaporation of resins and other VOC's contained in the wood.

Proposed Permit for Interstate Concrete and Asphalt

(1) Comments #3, 4, 7, 10, 11, 12 and 13 for the L.D. McFarland facility also apply to this permit.

(2) Testing of the Asphalt Plant Drum Dryer needs to be conducted more frequently than once every two years. Annually would be a minimum with bi-annually preferred. Also the permit must specify the source test method and not simply some method to be determined later by the Department.

(3) As discussed in comment #2 for the L.D. McFarland facility, the baghouses for the Cement Silo Vent need to include particulate emission limits that represent RACT (e.g., grains per dry standard cubic foot).

Proposed Permit for Lake Pre-Mix Concrete

(1) Comments #3, 4, 11, 12, and 13 for the L.D. McFarland facility also apply to this permit.

(2) As discussed in comment #2 for the L.D. McFarland facility, the baghouses for the Cement Silo Vent need to include particulate emission limits that represent RACT (e.g., grains per dry standard cubic foot).

I hope that you find these comments and suggestions to be useful as you prepare EPA's comments to IDEQ. If you have any questions, please contact David Bray.

IDAHO DEPARTMENT OF HEALTH AND WELFARE
DIVISION OF ENVIRONMENTAL QUALITY

1410 North Hilton, Statehouse Mail, Boise, ID 83720-9000, (208) 334-0502 Cecil D. Andrus, Governor

August 24, 1994

Dave Bray
Permits Program Manager
Environmental Protection Agency-Region 10
1200 Sixth Avenue, AT-082
Seattle, WA 98101

RE: EPA's Sandpoint PM_{10} SIP Operating Permit Comments

Dear Dave,

I reviewed the comments EPA has provided to DEQ. I contacted Steve Body to discuss two of the topics in the EPA comments - the Louisiana Pacific (L-P) lumber drying kilns and L.D. McFarland treatment tank emission limits. Steve requested that I discuss the topic with you. Since you are quite busy and I missed your call to me, I will convey my inquiry via FAX.

To date, DEQ has been unable to locate the information necessary to establish meaningful, defendable PM_{10} emission limits for the above sources. The Sandpoint SIP operating permits were originally drafted by an outside consultant, Bison Environmental. Bison was also unable to quantify the emissions from L.D. McFarland's pentachlorophenol/base oil treatment tanks. As for L-P's drying kilns, no other drying kilns in Idaho have ever been permitted to my knowledge. I am unaware of any other Northwestern state that has established emission limits on drying kilns.

The problem DEQ faces with establishing emission limits on these two sources is in establishing emission limits with substantive source testing, operation parameter monitoring, and recordkeeping requirements to place in an operating permit. James Evensen, L-P's Environmental Manager, has pointed out that the only information he's found available is from a kiln operating in the Southern United States, drying a different species of wood. This source is also declaring that much of the detailed source test information is confidential. The wood species, kiln temperature, kiln design, and other operating conditions should influence the quantity and rate of both VOC and PM emissions.

The VOC and PM_{10} emissions from McFarland's treatment tank need to be quantified to determine how significant a source this is. Is there any information EPA currently has available that it can share with DEQ to aid our research of these emission sources? If these sources are in fact significant, it may indicate a deficiency in DEQ's ambient impact modeling and subsequent control strategy. Any decisions that DEQ makes should be based on sound information.

L-P has noted in the Sandpoint facility emission inventory, submitted as public comment, that they believe that the kiln emissions are a significant source. L-P has offered to enter into a "joint research project" with DEQ in order to establish emission estimates for VOC, PM, and PM_{10} emissions for kiln drying of the species of wood processed at the Sandpoint facility.

Please contact me if you have any questions or comments about this inquiry at (208) 334-5898.

Sincerely,

Darrin Mehr, Air Quality Engineer
Operating Permits Bureau
Permits and Enforcement

Enclosure

cc: COF 1.1

Summary of Interstate Comments

Provided below is a brief summary of the comments provided by Interstate Concrete and Asphalt on the Proposed Interim Operating Permit #017-00035. This permit was one of the measures proposed by Idaho DEQ as part of the attainment plan submitted to EPA, in order to render the Sandpoint NAA as an attainment area for primary PM_{10} 24-hr standards.

Most of the controls and control technology have been updated from the initially chosen, 1990 base year. It is also felt that an assessment of actual operations and projection of operations for demonstration and maintenance of attainment status would be more realistic from a more recent year than 1990. Hence 1993 is recommended as a new base year as emissions, monitoring, and meteorological data are fully available for this year. As new emission numbers are sought the 1990 emissions estimates and comments on the 1990 inventory and subsequent permits, submitted by Interstate Concrete and Asphalt will be utilized to analyze any pertinent information and enhancements in technology or major changes in processes that would be common to any later emission statement submissions. The statements outlined below are in order from the letter from Paul Franz of Interstate. The comments are analyzed and commented on:

1) The silos were operating with a pneumatic fill system without silo vent baghouses. Baghouses were not installed till 1992 but the 1990 emission inventory (EI) assumes the use of a bucket elevator/filter sock combination. As a result the EI has a factor of 0.24 lbs/hr whereas the real factor is 0.27 lbs/hr.

   The emission factor that was used does assume the bucket elevator/filter sock arrangement and thereby decreases the emissions as Interstate claims that there were no controls at all. The proposed emission factor of 0.27 lb/hr appears to be accurate for a no control pneumatic fill system. Any future information submissions will have to be accompanied by certified proof and/or proof of PTC action on installation of the baghouses.

2) The haul road to the concrete plant was not paved in 1990. There were no controls till it was partially paved in 1992 and then fully in 1993.

   Plant Site Plot Diagram
   Emission sources clearly marked & labeled (Haul roads & any unpaved vehicle traffic areas)

   The haul roads were assumed to be paved as per the 1990 baseline EI, however any further or future year submissions will have to be accompanied with certified proof of the roads having been paved in 1993. The 1990 emissions rates will not be used in anticipation of changes in production/work practice parameters.

3) An 85% control factor is used at the mixer truck loadout based on the assumption that water spray was being used in 1990 to control emissions. The only water used at this point is mix water which is inherent in the emission factor of 0.07 lb/cy of mix. This is identified as one of the locations where the facility would be willing to invest some capital for control measures.

It would have to be clarified if the emission factor in the AP-42 implicitly includes the mix water in the factor. It does seem like the emission factor does include the mix water factor in which case the emissions would increase. However any further claims like this by industry will have to be backed by verifiable and credited research done on scientific basis and approved by either EPA or a recognized federal agency designated to do so.

4) The concrete trucks are assumed to operate at a full capacity of 8 cy/load. Due to the many short loads we deliver, our average load size is only 5.5 cy/load.

Once again seems to be lack of input on part of the industry. This will be noted unless the technique has changed drastically and again will have to be backed by valid certification.

5) Operating schedule: The concrete plant is open for business five days/week during the winter as well as the summer. Occasionally, we provide mix to a customer on Saturdays as well. The amount delivered will vary based on demand from a low of a few yards to a 1990/1991 winter high of 134 cy/day. We have never operated just two days/week for any more than the last week of December and the colder parts of January and February. Even then, one week might have four operating days and the next none. November and March are always five to six days/week. The permit should allow for the plant to operate all week and should account for the natural production demand variations we encounter. We also operate the plant 52 weeks/year or approximately 260 days rather than the 156 allowed.

Future information requests will have to obtain full actual operational schedule for base year and anticipated or worst case operations scenario for allowable/potential or projection years.

6) A similar argument applies to the asphalt plant. The permit says we can and have only operated only two days per week during the winter. This is incorrect. During the first three weeks of November the plant normally operates five to six days per week. After that, it is shut down until April. The average may be two days a week for modeling purposes but the average should not become the maximum. There is a big difference.

Future information requests will have to obtain full actual operational schedule for base year and anticipated or worst case operations scenario for allowable/potential or projection years.

7) Cement quantity is grossly underestimated and the load sizes far in excess of legal for roads. Each Cy of concrete contains an average of 515 # of cement. The average thanker can haul 28 tons (the biggest can haul 33 t). At 15000 Cy/1990 this equals 3862.5 tons of cement or "approximately" (not to be construed as maximum or minimum 138 loads. The permit limits us to 36 loads.

Documentation will be required on any claims like this, in future.

8) What is the HIGH-AVERAGE WINTER HR/DAY? What is the averaging period? All winter? - one month? - one week? - a few days?

Some of the SIP assumptions were done without sufficient documentation. This is one of the examples. Another example is using 50000 t/yr for production rate for the asphalt plant instead of the 1990 permitted 20000 t/yr. A close review od Kevin Schilling's notes reveals that the 50000 t/yr was a 1988 actual and anticipated as the worst case for calculations for the high-average estimation.

9) The permit conditions for the concrete plant should be written in CY of concrete per hour/day/month and not the tons of aggregate into the bins, and then again into the truck, and the tons of cement into the silo, and then into the weigh hopper, and then into the truck. We track our production by the cy of finished product. This is easily tracked and audited. It should be more than adequate for permitted thruput control and documentation. It will be much easier for our people to control and report and for DEQ personnel to regulate and inspect.

This is a good suggestion which should be noted and implemented. If there is a certain industry standard for specifying units it should be followed all through the inventory process.

The SIP uses a wrong unit for the emission factor for truck loading of 0.07 lb/ton instead of 0.07 lb/cy. This reduces the final emission rate for this source by half. It should be taken care to avoid such mistakes in the current EI. Further more it will be standard policy that any further quantitative claims by industry will have to be backed by verifiable and credited research done on scientific basis and approved by either EPA or a recognized federal agency designated to do so. All information will also be certified true and pending legal action if found false and unreliable.

KOPPERS INDUSTRIES

Koppers Industries, Inc.
436 Seventh Avenue
Pittsburgh, PA 15219-1800

Telephone: (412) 227-2001

via UPS Next Day Delivery

April 22, 1994

Eugene Crumpler
Office of Air Quality Planning and Standards
U. S. EPA (MD-13)
Research Triangle Park, N. C. 27711

Dear Mr Crumpler:

As previously promised to you, Koppers has had the report about vacuum system emissions from our Susquehanna plant rewritten to develop emission factors in the same format as are being using for the AP-42 document and to make some corrections. One problem you and I both encountered was that data concerning the discharge from the secondary condenser was suspect. Reveiw by Koppers' consultant found the data inadequate to quantitate those emissions. Therefore, this report now provides emission factors for the vacuum system, but does not provide factors or emission reduction efficiency information about the secondary condenser.

I hope you find this information useful. Please call me at (412)227-2677 if you have questions.

Thank you for waiting for this report to be completed.

Sincerely,

Stephen T. Smith

Stephen T. Smith
Environmental Program Manager

cc without attachment:
J. R. Batchelder, K-1701
Dallas Safriet, U. S. EPA
Marty Wikstrom, AWPI

KOPPERS INDUSTRIES

Koppers Industries, Inc.
436 Seventh Avenue
Pittsburgh, PA 15219-1800

Telephone: (412) 227-2001
Fax: (412) 227-2423

VIA FAX WITH ORIGINAL BY MAIL.

February 14, 1994

Dallas Safriet
Emission Inventory Branch (MD-14)
U. S. EPA
Research Triangle Park, N. C. 27711
FAX NO: 919-541-0684

Dear Mr. Safriet:

I am writing in response to the draft section 10.8 supplement to AP-42 which you provided to AWPI. Koppers Industries, Inc. is a member of the AWPI and I serve as Chairman of the Regulatory Affairs Committee of the AWPI. I have participated in developing the comments submitted by the AWPI to you. However, in addition to those comments, I would like to provide additional data which Koppers has developed related to emissions of creosote constituents from a wood preserving process which treats wood with creosote. That study is not yet ready to submit, so I request that you allow Koppers approximately one additional month to complete the preparation of a report which I will then submit to you.

In 1990, Koppers conducted stack tests at our Susquehanna Plant near Montgomery, PA for the purpose of developing data for use in our Form R emission reporting for the various Koppers plants. The Susquehanna plant treats rail road ties in three 8' by 140' treatment cylinders. Vacuum is developed with liquid ring vacuum pumps. Exhaust from the vacuum pumps is routed, along with cylinder exhaust air, to a secondary water cooled shell and tube condenser which then vents to atmosphere. Emissions were tested at two points; before the secondary condenser and at the exhaust stack from the secondary condenser. Thus, we developed data reflecting emissions for a system without a secondary condenser, for one with a secondary condenser, and the removal efficiency of a secondary condenser. Emissions were quantified by on a pound per hour basis for each cycle.

In my attempt to develop emission rates on a pound per cubic foot of treated wood basis, as in the AP-42 document, I discovered some problems in our report. First, not all PAH constituents were reported. Second, gas flow rates at the two monitored points seemed inconsistent. I have already checked with the laboratory which analyzed the samples, they have retrieved the report documentation, and have provided the full PAH analyses for the samples. These now need to be used to develop emission estimates. Field data from the report is being reviewed to make a best estimate of gas flow rates. This work, along with

treating process records will be used to prepare a new report which will provide emission factors in pounds per cubic feet treated. I believe you will find data contained in the new report to be of equal or better quality to that which you now have available and should assist you in developing more accurate emission factors.

The work described above is now underway by a consultant to Koppers. I expect to be able to provide this to you by the middle of March. Koppers and the AWPI hope and request that you hold back on finalizing the AP-42 supplement until this data can be considered.

Please call me at (412)227-2677 if you have questions. Thank you for this consideration.

Sincerely,

Stephen T. Smith

Stephen T. Smith
Environmental Program Manager

cc: Marty Wikstrom, AWPI (by FAX)
J. R. Batchelder, K-1701

THE RAILWAY TIE ASSOCIATION

Publishers of CROSSTIES

Mail Address: P.O. Drawer 1039, Gulf Shores, Al. 36547
TEL: 205-968-5927 (140 Cove Avenue) *FAX: 205-968-5929*

FAX TRANSMISSION COVER PAGE

DATE: March 2, 1994

TO: Dallas W. Safriet
United States Environmental Protection Agency
Environmental Engineer
Emission Inventory Branch (MD-14)
Research Triangle Park, NC 27711

FAX NO: 919-541-0684

RE: Section 10.8, *Wood Preserving*
AP-42, *Compilation of Air Pollutant Emission Factors*

NUMBER OF PAGES INCLUDING COVER PAGE:

##

The Railway Tie Association (RTA) wishes to comment as follows in reference to EPA's August 21, 1993 draft of above subject.

RTA endorses and supports the American Wood Preservers Institute (AWPI) comments dated February 18, 1994 and further submits these additional:

1) We seriously question the accuracy of the data concerning emission factors for wood treating facilities, particularly due to the lack of reliability and the non-typical equipment and processes utilized at the Wyckoff facility on which most of EPA's proposed emission factors are based. AWPI and RTA members are now gathering extensive data which will be forwarded to EPA upon completion. EPA is familiar with and we understand has endorsed this data gathering project.

2) We urge you to delay issuance of section 10.8 until realistic and valid data can be produced.

RTA appreciates the opportunity to comment and asks for that same opportunity on any future drafts.

Raymond R. Wingard
Raymond R. Wingard
Executive Director

The Association of
Texas Electric Cooperatives, Inc.

P.O. Box 9589, Austin, Texas 78766-9589
8140 Burnet Road, Austin, Texas 78757-7799 AC 512 454-0311

February 7, 1994 **CERTIFIED MAIL**

Mr. Dallas W. Safriet
Environmental Engineer
Emission Inventory Branch (MD-14)
Office of Air Quality Planning and Standards
United States Environmental Protection Agency
Research Triangle Park, North Carolina 27711

Re: Freedom of Information Request

Dear Mr. Safriet:

Texas Electric Cooperatives, Inc. hereby requests copies of the following reports in their entirety including data and appendices:

C. C. Vaught and R. L. Nicholson, Evaluation of Emission Sources from Creosote Wood Treatment Operations, EPA-450/3-89-028, U. S. Environmental Protection Agency, Research Triangle Park, NC, June 1989.

B. DaRos, et al., Emissions and Residue Values from Waste Disposal During Wood Preserving, prepared by Acurex Corporation, EPA-600/2-82-062, U. S. Environmental Protection Agency, Cincinnati, OH, April 1982.

Emission Test Report, Air Toxics Sampling at Wyckoff, Inc., Bainbridge Island, Washington, prepared by Engineering Science, EPA-910/9-86-149, U. S. Environmental Protection Agency, March 1986.

Report of Emissions Test: Koppers Industries Wood Fired Boiler, Florence SC, prepared for Koppers Industries, by ATEC Associates, Inc., October 8, 1991.

Non-criteria Pollutant Emissions Calculations for Koppers Industries, Salem, VA, prepared for Koppers Industries, by ETS, Inc., June 17, 1991.

Assessment of the Fume Scrubber Operational Performance at Burke-Parsons-Bowlby, Dubois, PA, prepared for Burke-Parsons-Bowlby, By Allied-Signal, Inc., Environmental systems, May 1992.

RETEC

Damonmill Square
9 Pond Lane
Concord, MA 01742-2851
(508) 371-1422
FAX (508) 369-9279

August 4, 1994

Mr. Dallas Safriet
USEPA
Office of Air Quality Planning and Standards
MD-14
Research Triangle Park, NC 27711

Subject: Draft AP-42 Emission Factors

Dear Mr. Safriet:

As per our telephone conversation on August 3, 1994, I am requesting a copy of the draft AP-42 emission factors for the wood treatment industry, when it becomes available in September 1994.

Sincerely,

REMEDIATION TECHNOLOGIES, INC.

Richard T. Roat
Air Quality Scientist

RTR/kmb

File: OH\RTR\SafriLtr.015

The Association of
Texas Electric Cooperatives, Inc.

P.O. Box 9589, Austin, Texas 78766-9589
8140 Burnet Road, Austin, Texas 78757-7799 AC 512 454-0311

February 7, 1994 **CERTIFIED MAIL**

Mr. Dallas W. Safriet
Environmental Engineer
Emission Inventory Branch (MD-14)
Office of Air Quality Planning and Standards
United States Environmental Protection Agency
Research Triangle Park, North Carolina 27711

Re: Freedom of Information Request

Dear Mr. Safriet:

Texas Electric Cooperatives, Inc. hereby requests copies of the following reports in their entirety including data and appendices:

C. C. Vaught and R. L. Nicholson, Evaluation of Emission Sources from Creosote Wood Treatment Operations, EPA-450/3-89-028, U. S. Environmental Protection Agency, Research Triangle Park, NC, June 1989.

B. DaRos, et al., Emissions and Residue Values from Waste Disposal During Wood Preserving, prepared by Acurex Corporation, EPA-600/2-82-062, U. S. Environmental Protection Agency, Cincinnati, OH, April 1982.

Emission Test Report, Air Toxics Sampling at Wyckoff, Inc., Bainbridge Island, Washington, prepared by Engineering Science, EPA-910/9-86-149, U. S. Environmental Protection Agency, March 1986.

Report of Emissions Test: Koppers Industries Wood Fired Boiler, Florence SC, prepared for Koppers Industries, by ATEC Associates, Inc., October 8, 1991.

Non-criteria Pollutant Emissions Calculations for Koppers Industries, Salem, VA, prepared for Koppers Industries, by ETS, Inc., June 17, 1991.

Assessment of the Fume Scrubber Operational Performance at Burke-Parsons-Bowlby, Dubois, PA, prepared for Burke-Parsons-Bowlby, By Allied-Signal, Inc., Environmental systems, May 1992.

Determination of Air Toxic Emissions from Non-traditional Sources in the Puget Sound Region, EPA-910/9-86-148, U. S. Environmental Protection Agency, Region X and Puget Sound Air Pollution Control Agency, Seattle, WA, By Engineering-Science, Inc., April 1986.

Engineering Calculation of Pentachlorophenol Air Emissions at Wood Preserving Facilities, prepared for Vulcan Chemicals, Birmingham, AL, by H. M. Rollins Company, Inc., August 31, 1992.

Results of the September 1991 Air Emission Compliance Test on the Pole Treatment Facility at the Bell Lumber and Pole Plant in New Brighton, Minnesota, prepared for Bell Lumber and Pole Company, by Interpoll Laboratories, Inc., October 24, 1991.

Final Emission Data Report: Emission Testing Program at Koppers Superfund Site, Oroville, California, prepared for U. S. Environmental Protection Agency, Region IX, by Ebasco Services Incorporated, December 1989.

Emission Factor Documentation for AP-42 Section 10.8, prepared for the Environmental Protection Agency, OAQPS/TSD/EIB/EFMS, by Midwest Research Institute, August 1993.

If there is a charge for photo copying, postage and handling, please bill us or let us know the amount and we will forward a check. Thank you very much.

Sincerely,
TEXAS ELECTRIC COOPERATIVES, INC.

Charles R. Faulds

Charles R. Faulds, P.E.
Director of Environmental Services

CRF:clLINFORQT.JAS VI E

Vulcan CHEMICALS

P.O. BOX 530390
BIRMINGHAM, ALABAMA 35253-0390
(205) 877-3000

A DIVISION OF
VULCAN MATERIALS COMPANY

original sent to MRT 8-20-96

August 9, 1996

Mr. Dallas Safriet
Emission Factor and Inventory Group
Emissions Monitoring and Analysis Division
Office of Air Quality Planning and Standards
United States Environmental Protection Agency
Research Triangle Park, NC 27711

Re: Revised Draft Report, Wood Preserving, Section 10.8, AP-42

Dear Mr. Safriet:

Vulcan Chemicals appreciates the opportunity to have reviewed the June 1996 draft of the Wood Preserving section of AP-42. As the only U.S. manufacturer of pentachlorophenol, our comments on the draft are restricted to this preservative.

Since this draft of the report does not contain any emission factors for pentachlorophenol, our comments are somewhat administrative in nature. Our comments are as follows:

1. In Table 2-3 on page 2-5, the composition of pentachlorophenol solutions is incorrect. The composition should read: chlorinated phenols, $\geq$ 5%; hydrocarbon solvents $\leq$ 95%.

2. On page 2-6, the verbal description of pentachlorophenol solutions is incorrect. Heavy petroleum oils are the dominant solvent carrier used. This section should be revised to read: "These solutions consist primarily of chlorinated phenols and heavy petroleum oils. Methylene chloride and liquid petroleum gas have also been used as solvents in pentachlorophenol solutions but are no longer in use in the United States. The primary use of pentachlorophenol solutions is in the treatment of utility poles."

3. Vulcan Chemicals requests that a statement be added to the Emission Factor Documentation and to the final Section 10.8, that qualitatively describes the low potential for emission of significant quantities of pentachlorophenol. Vulcan presented substantial documentation to EPA in support of removal of pentachlorophenol wood preserving processes from the "major source" industry category, and EPA has done this based upon their assessment that the potential emissions of pentachlorophenol are small.

In our report "Engineering Calculations of Pentachlorophenol Air Emissions at Wood Preserving Facilities", dated 9/1/94, the estimated annual process emissions of pentachlorophenol from a typical large wood preserving facility were only 1.31 pounds, and emissions from the finished goods were only 16.38 pounds. While this report could not be used for AP-42 emission factor determination, it does agree well with industry emissions as reported on SARA Form R's.

Perhaps a statement could be added to Section 2.3 Emissions, page 2-12; and to paragraph 10.8.2 Emissions, page 10.8-6; which states that: "Emissions of pentachlorophenol from processes using this preservative are generally not significant." This could be inserted after the statement describing the primary sources of emissions from oil-borne preservatives in the first paragraph of both of these sections.

Vulcan Chemicals sincerely appreciates being given the opportunity to participate in this process, and if we can be of further assistance please let us know.

Sincerely,

Carleton Degges

Carleton W. Degges
Environmental Coordinator

at

c: Martin Rollins - HM Rollins Company
George Parris - AWPI

Vulcan
CHEMICALS

P.O. BOX 530390
BIRMINGHAM, ALABAMA 35253 0390
(205) 877-3000

A DIVISION OF
VULCAN MATERIALS COMPANY

February 8, 1994

Mr. Dallas W. Safriet
Environmental Engineer
Emission Inventory Branch (MD-14)
United States Environmental Protection Agency
Research Triangle Park, NC 27711

Re: Draft Section 10.8, of AP-42

Dear Mr. Safriet:

Vulcan Chemicals is the only U.S. manufacturer of pentachlorophenol, and as members of the American Wood Preservers Institute (AWPI) we were sent a copy of the above referenced document by that industry trade association.

As requested in your cover letter to AWPI, we are providing the following comments on the draft "Wood Preserving" section proposed to be added to AP-42, Compilation of Air Pollutant Emission Factors. Our comments will focus on the development of the proposed factors for pentachlorophenol wood treatment facilities, but the comments do in some cases apply to other treatment systems.

Vulcan Chemicals and its consultant, H. M. Rollins Company, Inc., have reviewed the test data upon which the Agency has relied in establishing the proposed emission factors. Our comments are based upon a draft copy, dated October 1985, of the Wyckoff test report used as Reference 3. Unfortunately, we did not have a copy of the final report, but the test results do not appear to have changed. In addition, Vulcan's consultant has discussed the operating configuration of the plant at which EPA's testing was conducted with prior employees of that facility.

Based upon the information available, Vulcan Chemicals believes that the emission factors for the pentachlorophenol wood preserving process are in error. All of the emission factors for the pentachlorophenol wood preserving process are based upon tests at a single facility, and this testing has serious flaws. These flaws result in a substantial overestimation of releases in general, and the incorrect association of large releases of creosote constituents with pentachlorophenol wood preserving processes. Our specific concerns and discussion of these concerns are as follows.

1. Large releases of creosote constituents, such as acenaphthene, phenanthrene, and fluorene are attributed to the pentachlorophenol wood treatment process. This is incorrect. The Wyckoff facility tested in Reference 3 used the same vacuum system for both pentachlorophenol and creosote wood treatment processes.

The vacuum system at a wood preserving facility normally consists of a water cooled condenser to condense all the condensible materials, a liquid receiver to collect the materials condensed, and a vacuum pump to remove noncondensible materials and create the vacuum. The vacuum device is connected to the liquid receiver. Apparently the liquid receiver and/or condenser system still contained significant creosote materials from a prior creosote treatment at the time that vacuums for the pentachlorophenol process were applied.

2. The mass flows computed for releases from the vacuum system during the conditioning cycle and final vacuum cycle are too high. As discussed in 1 above, the creosote constituents reportedly released during the pentachlorophenol cycle are a result of cross contamination due to the common usage of the same vacuum system, however, the reported release of acenaphthene during the pentachlorophenol conditioning cycle is more than an order of magnitude higher than the release reported during the creosote conditioning cycle (.028 lb/ft^3 vs .0026 lb/ft^3). The Agency should not associate these creosote releases with the pentachlorophenol process, and the reported levels would appear to be suspect even for the creosote process.

   In the Wyckoff test, the Agency reported gas velocities and flow rates exiting the vacuum system that are virtually impossible in a properly operating vacuum system. The reported volumetric flow rates for the two pentachlorophenol vacuum tests were 780 and 750 acfm. One of these measurements was during the Boulton conditioning cycle and one was during the final vacuum cycle.

   Either these measurements of flow are grossly in error, or the vacuum system being tested was not functioning properly. A properly functioning vacuum system will condense all of the condensible materials and only the noncondensibles (i.e. air) will be drawn through the vacuum pump. The vacuum pump is connected to a closed system, so that the maximum air volume to be removed is fixed by the volume of the vessel and connected piping, assuming no significant leaks. When the vacuum system is turned on, the initial flow rate may approach the reported rate, but this rate declines rapidly as the level of vacuum in the system increases. The total volume removed during the final vacuum cycle should not substantially exceed the volume of the closed system if, in fact, the system does pull the required vacuum. The pumping capacity of vacuum pumps, in dry standard cubic foot terms, declines rapidly as the level of vacuum increases. The fact that the desired vacuum was achieved, negates the possibility of significant leaks.

3. During the Wyckoff testing, the only point at which pentachlorophenol was detected was in the fugitive emissions from the retort, and in only one of three tests of this emission. Tests of the conditioning and vacuum cycles reported nondetectable levels of pentachlorophenol.

The proposed AP-42 section purports to be using "average" values, and therefore a reader and user of this section might assume that an emission factor for pentachlorophenol of <.0009 lb/ft^3 as shown for the conditioning cycle, may represent an average that includes some detectable as well as some nondetectable test results. This is not the case, pentachlorophenol was not detected in any of the conditioning cycle or final vacuum/cool-down cycle tests.

Although there is not sufficient detail in the proposed AP-42 document to be certain, it appears that the pentachlorophenol fugitive emissions factors are based upon Table 5.9 of the draft Wyckoff test report. These numbers are not averages, but are instead, maximums.

The AP-42 section should be amended to clearly indicate that pentachlorophenol was not detected in any test other than the fugitive emission test from the retort, and Vulcan Chemicals questions the appropriateness of publishing emission factors for releases of pentachlorophenol from process vents in which testing did not reveal the presence of pentachlorophenol.

4. The Wyckoff test emission data found in most of the tables of the draft report reviewed by Vulcan, do not represent average data. As an example, the test results in Table 5.5a show that emissions measured at the end of the Boulton cycle are orders of magnitude lower than the emissions at the start of the Boulton cycle. The emission rate table found as Table 5.6a in the draft Wyckoff report is based on the maximum emission rate, not an average over the cycle.

   This same error is found throughout the report, such as in the fugitive pentachlorophenol emissions discussed in 3 above.

5. The tests for fugitive emissions from the retort opening at the Wyckoff facility are not well documented. This test used a vane anemometer to attempt to measure the velocity of gases leaving the retort. The study subjectively assigns this velocity to a portion of the cylinder opening, resulting in an estimated outflow of 4000 acfm. No mention is made of ambient wind velocity or its potential impact on the apparent velocity measured by the vane anemometer.

   A flow rate of 4000 acfm would suggest a complete exchange of air from the 5700 ft^3 retort every 1.4 minutes. The retort is a horizontal cylinder, 130 feet long, 90 inches in diameter, and closed on one end. The only driving force to cause flow to occur would be the convective flow caused by the heat of the cylinder. This configuration is not conducive to the establishment of high natural draft velocities.

Vulcan Chemicals is supportive of the Agency's efforts to produce a wood preserving section of AP-42 because of its utility to members of the industry as well as others who may have concerns regarding air emissions from wood preserving facilities. Vulcan Chemicals does, however, want to ensure that the emission factors published by the Agency are as accurate as possible and truly reflect emissions from wood preserving operations employing pentachlorophenol. We have presented our comments based upon our review of the proposed Section 10.8 and our review of a draft copy of the Wyckoff testing that serves as the basis of the emissions estimates. In summary, our comments are as follows:

1. The Wyckoff test data is suspect in several areas.

2. The pentachlorophenol emissions improperly reflect significant creosote emissions, and these emissions are associated with cross contamination from joint use of the vacuum system for creosote treatment.

3. The emissions estimates in the Wyckoff report are in many cases based on maximums, not averages.

4. Vulcan Chemicals suggests that emission factors not be published for those processes where the compound was never detected during the testing, or that the narrative and tables presented in AP-42 be revised to clearly indicate that pentachlorophenol was not detected during any of the tests of those processes.

Vulcan Chemicals appreciates the opportunity to provide comments on the proposed addition to AP-42. If we can be of further assistance in discussing these comments, please let us know.

Sincerely,

Carleton W. Degges at/h

Carleton W. Degges
Technical & Environmental
Services Representative

at