Note: This is a reference cited in *AP 42, Compilation of Air Pollutant Emission Factors, Volume I Stationary Point and Area Sources.* AP42 is located on the EPA web site at www.epa.gov/ttn/chief/ap42/

The file name refers to the reference number, the AP42 chapter and section. The file name "ref02_c01s02.pdf" would mean the reference is from AP42 chapter 1 section 2. The reference may be from a previous version of the section and no longer cited. The primary source should always be checked.

Background Report Reference

AP-42 Section Number: 10.8

Background Report Section: 4

Reference Number: 19

Title: Personal Communication from Michael R. Corn & Douglas S. Smith, AquAeTer Incorporated, To Martin Wikstrom

American Wood Preservers Institute

December 28, 1994

optimizing environmental resources ♦ water, air, earth **AquAeTer**

AP-42 Section ____
Reference ____
Report Sect. 4
Reference 19

December 28, 1994 940176-2

Mr. Martin Wikstrom
Tysons International Building
1945 Old Gallows Road, Suite 150
Vienna, Virginia 22182

RE: Responses to EPA Concerns on Black Tie Emissions Calculations

Dear Mr. Wikstrom:

This is a response to the critique that Mr. Gene Crumpler of the U.S. EPA sent to the AWPI concerning the report entitled "Calculated Emissions from Creosote-Treated Wood Products" by **AquAeTer, Inc.** This report, which was presented in Raleigh-Durham on October 13, 1994, detailed a mathematical model for calculating emissions from the storage of creosote-treated wood products such as ties and poles. The model was developed from emissions data collected at Oroville, California by Koppers on creosote-treated poles and from temperature data collected by **AquAeTer** on poles at the Koppers facility in Grenada, Mississippi and on cross ties at the Kerr-McGee facility in Indianapolis, Indiana. The emissions model was developed for the use by both tie and pole treating facilities.

COMMENT 1

> "The one element of the calculation procedure with the high degree of uncertainty is the assumption that in the case of railroad ties, only the surface area on the outside of the bundles is emitting creosote components. With the stacking procedures used at Kerr-McGee presented in the document, only 8 percent of the total surface area of the treated ties is exposed, the remaining 92 percent is considered non-emitting. This assumption appears to be overly conservative leading to underestimation of emissions. Since the liquid creosote is apparently able to penetrate all surfaces of the ties during pressure treatment, then it would seem only logical that off gassing from inside the tie bundle must be possible. Resolution of this clear inconsistency is essential to obtaining our endorsement of the overall procedure."

P.O. Box 1187 ♦ Brentwood, TN ♦ 37024-1187 ♦ Phone (615) 373-8532 ♦ Fax (615) 373-8512

Response:

The one element of the calculation procedure that Mr. Crumpler expressed a concern for a high degree of uncertainty was the assumption that the exterior surface area is the only emission source. He made three statements about the uncertainty of our assumption. All three statements are related to the inconsistency identified by Mr. Crumpler, but each statement can be addressed in order to adequately respond to his concerns for uncertainty and potential underestimations of emissions. The comment statements and responses are highlighted below.

Comment Statement 1.

"With the stacking procedures used at Kerr-McGee presented in the document, only 8 percent of the total surface area of the treated ties is exposed, the remaining 92 percent is considered non-emitting."

Response No. 1

The resulting implication that only 8 percent of the total surface area of stacked black ties is emitting naphthalene and that the remaining 92 percent is considered non-emitting was unintentional.

A direct quote of the assumption from the document reads:

"Ties, bundles, and stacks are stored in such a way that only outside surfaces have the potential to emit."

The assumption can be phrased more clearly as:

"All treated ties have the *potential* to emit, and the only emission pathway for naphthalene contained in a treated tie, bundle, and stack is through the external surface area of the tie, bundle, or stack (including the small void spaces between the ties or poles)."

It is fully recognized that each and every creosote-treated tie in a stack or bundle has the potential to emit. Emissions from the inside surfaces, although very minor, have been accounted for by modifications to the surface areas and geometries and are explained in Response No. 2 of this letter.

As an example, consider one creosote-treated railroad tie which is several days old (e.g., subject to ambient thermodynamics rather than the higher retort temperature effects), and completely exposed to the atmosphere. A fraction of the naphthalene on the surface of this tie will be emitted to the atmosphere because a concentration, or driving force, exists between the

creosote preservative on the tie surface and the atmosphere and because naphthalene has a significant vapor pressure relative to other creosote components. From our field temperature measurements, we have determined that a significant temperature gradient no longer exists between the atmosphere, the outside tie surfaces, and the inside tie surfaces within 12 to 24 hours. Thus, the primary driving force for the emissions becomes the concentration gradient, which is described by the first-order kinetics equation developed from the Oroville data. Because this test was done at a constant wind velocity across the treated poles, the first-order rates developed for the model should be at a maximum.

As naphthalene is lost from the surface of the example tie, a state of concentration differential exists between the tie surface and the tie interior, providing a driving force for naphthalene to migrate from the interior of the tie towards the surface. As surface naphthalene is renewed by that of the interior, the tie will continue to emit naphthalene but at a steadily decreasing rate. The rate decreases because the initial mass of naphthalene gained by the tie during treatment is gradually reduced by emissions, which decreases the concentration gradient that acts as a driving force for emission.

Comment Statement 2.

"This assumption appears to be overly conservative leading to underestimation of emissions."

Response No. 2

The emissions estimates are not overly conservative because the emission rate determined by the model at any given time will be a maximum rate since the creosote-treated test pole data which form the basis of the model were at conditions which provided maximum potential to emit. Our field observations and dynamics of gases and vapors suggest that the outside surfaces emit differently from the inside surfaces. Finally, the assumed geometries of the stacks which determine the total emitting surface areas and therefore, the potential emissions, have been modified to reflect comments not only from Mr. Crumpler, but also comment from the AWPI members on the various geometries that are used. The net result was to increase the total surface area to ensure that the emission estimates are not underestimated for different geometries and for void spaces.

In the test model the creosote-treated test poles were not stacked; rather, they were continuously subjected to a 5 mph air flow over the completely exposed surfaces. Also, the poles were completely enclosed in a test vessel (tent), and were tested at an atypically warm ambient temperature of 80 °F (average) throughout the entire test. Thus, the kinetic data recorded from these test conditions represent maximum emissions, as it is highly unlikely to encounter these extreme test conditions on a continuous basis in realistic scenarios. The procedure, based on the test pole emission data, represents a maximum emission scenario.

If the example tie or pole is packed in the center of a rectangular bundle of treated ties, there would be some void space, although minor, between this tie and the surrounding ties. Any air surrounding the internal tie in this small void space would be saturated with naphthalene. The concentration differential between the tie surface and the surrounding voids, and therefore the driving force to emit, is greatly reduced until this void-space naphthalene is lost to the outside surface of the bundle. The driving force for an internal tie to emit will be much less than that of a tie directly exposed to the atmosphere, since this void space would be expected to become saturated, thereby reducing or stopping the potential for these interior surfaces to emit. For equivalent temperatures, the tie surface cannot emit into air saturated with naphthalene (or any other constituent). Any naphthalene emitted from the bundle must cross one of the rectangular planes or boundaries which comprise the outside surface area of the bundle, and would be first emitted by the ties exposed to the atmosphere or the small void spaces along this surface plane. The small void spaces between ties/poles have been assumed to have the same emission rate as the exposed tie surfaces.

In the assumption, two concentration gradients exist in the tie stack/bundle: one between the atmosphere and the outside surface of the stack/bundle, which is the greater of the two gradients; and the second between the outside surface of the stack and the interior air spaces/voids. This second and lesser concentration gradient between the interior ties and the external surface area is actually the rate-controlling step for emissions. The assumption of two concentration gradients is based on the capacity of a given volume of air to be saturated (as mentioned above) and our field observations.

The air between the ties, stacks, bundles is assumed to be saturated with naphthalene. A given volume of air has a definite saturation point that limits the volume that a chemical vapor (naphthalene) can occupy. The air spaces formed by wooden or metal slats placed between stacks (for fork truck access) are also assumed to be saturated with naphthalene and to emit at the same rate as the external tie surfaces. Voids formed by the spacing beams comprise less than five percent of the emitting surface area, and so do not significantly impact the model. The five percent of the surface area comprising void space is well within the accuracy and precision of the field test data and the precision to which the ties are stacked and measured.

To assume that an inside tie surface emits at the same rate as an outside tie surface assumes that the air inside the stacks does not have a higher concentration than the ambient atmosphere nor do the interior surfaces have higher concentrations than the outermost surfaces. It is reasonably sound to assume that the naphthalene concentrations on the inside surfaces of the stack are higher than the surface concentrations and this is supported from our field observations. These observations show that the ties on the inside of the stack are noticeably darker than the external ties; that is, the surfaces of the ties contain greater creosote concentrations after a period of time in the yard. If the internal and external emission rates were equal, which they are not, the color of the tie/pole surfaces throughout the bundle would be uniform, which it is not.

Further analysis of industry stacking practices indicates that assumed geometries could be modified to add more surface area in order to better depict the various stacking geometries used. Several AWPI members wanted to be more conservative so that a broader range to stacking geometries would reflect the model geometries. Therefore, the geometries of trams, bundles, layouts, and stacks have been adjusted to ensure that the emitting surface areas and associated emissions are not underestimated. The new geometries are graphically displayed in the attached drawings.

The assumed geometries for both ties and poles on trams have been changed from 5 emitting rectangular surfaces (no bottom emitting surface) to a more realistic cylindrical geometry that also accounts for the under (bottom) sides of the trams. The new cylindrical geometry of the tie tram stack example provides 183 ft^2 of emitting surface area; an approximate 7.3 percent increasing emitting surface area from the previous rectangular geometry of 171 ft^2. The new pole geometry provides an approximate 6.2 percent increase in emitting surface area.

The 100 percent pole layout geometry remains as a rectangle but now includes the under (bottom) side of the pole layout as part of the total emitting surface area. The inclusion of the bottom side of the pole layout practically doubles the emitting surface area. But, because the actual time that the poles spend in 100 percent layout is small, relative to yard storage time, the increase in annual emissions is not doubled.

The pole yard storage geometry has been changed from a trapezoid to a pyramid. Further study of pole yard stacking practices indicates that the pole yard stack geometries can be more accurately depicted as a pyramid. Additionally, due to the inconsistent sizes in pole stack risers used throughout the industry, the underside of the pole yard stacks has been added to the model's total emitting surface area. The pyramid shape provides an approximate 58 percent increase in emitting surface area over the previous trapezoid shape that did not include the under side.

The tie bundle and stack geometry remains rectangular but the tie stack emitting surface areas have been modified, based on comments from member of the AWPI, to account for emissions from the interior stack surfaces between the bundles. Two scenarios have been presented to represent the potential emissions from the stacks.

In the first scenario, a one foot wide emission plane has been added to the bottom of each bundle in the tie stack (a total of 3 per stack) as depicted in the drawing. Based on field observations and measurements, the very inner center surfaces of the stacks receive little or no wind velocity and experience very little temperature variation compared to the outer one foot edge of the interior surfaces and the outside surfaces. This scenario appears to be a more realistic representation of actual emissions. Therefore, to eliminate the concerns for an underestimation of emissions, it is reasonable to assume that a one foot plane on the inner stack surfaces also contributes to the total outside surface emissions. The outside surfaces (3 inches) of these one foot emission planes are accounted for by the overall geometry of the stack (i.e., the

total height). The addition of the one foot emission plane provides an 18.8 percent increase in the total tie stack surface area as depicted in the example.

The second scenario reflects the comments from the member of the AWPI and a worst case scenario which includes the surface area of the top and bottom of each tie bundle in the stack as depicted in the attached example. Adding the entire top and bottom surface areas of each bundle increases the stack surface area by 63.6 percent. The increase in emissions from the additional 5 surface areas provides an annual emission rate of 4.17 tpy; approximately 50 percent more than the initial emissions of 2.78 tpy. Table 1 in this letter shows a comparison of the surface areas and emissions from the suggested model stacking geometries.

Comment Statement 3.

"Since the liquid creosote is apparently able to penetrate all surfaces of the ties during pressure treatment, then it would seem only logical that off gassing from the inside the tie bundle must be possible."

Response No. 3

The behavior and dynamics of gases and vapors can be used to clarify the dynamics of the tie stacks. In the wood treatment process, liquid creosote penetrates into the tie/pole stacks under pressures up to five atmospheres and at elevated temperatures with the intention that the preservative be retained for decades. The actual cylinder pressure is as high as 150 psi or greater. The highest possible pressure gradient for naphthalene to emit to atmosphere is its partial pressure of less than 1 mm Hg (0.02 psi) at 100 °F. Thus the gradient in ambient conditions is about 10,000 times less than in the pressure cylinder. Additionally, the high treating pressure is provided time to equalize during the final vacuum phase of the treating cycle. Therefore, the behavior and dynamics of liquids under heat and pressure cannot be used to determine the dynamics of gases and vapors at ambient atmospheric conditions. The tie/pole surfaces inside the stack do emit, and the emissions do migrate to the outside surface of the bundle as previously explained. However, the emission rate and the dynamics by which these gases emit and migrate to the surface are not comparable to and should not be determined by the dynamics of the liquid creosote at retort conditions.

CONCLUSION

The assumption discussed above is believed to be a technically sound assumption that does not lead to an underestimation of emissions with a high degree of uncertainty. This assumption is based on relatively sound test data, field observations by **AquAeTer.** and the dynamics and behaviors of gases and vapors. The three supporting factors for the assumption as previously stated are:

1) The model is based on test data obtained under conditions which provide the treated wood surface a maximum potential to emit;

2) the void spaces between the stacks/bundles do emit but the total tie emission rates are controlled by the smaller rate existing between the interior void space and the outside surface and the void space comprises less than 5 percent of the total surface area; and

3) the dynamics and behavior of the gases and vapors migrating from the inside to the outside surface should not be compared to or determined by the dynamics of liquid creosote under retort conditions of high pressure and temperatures.

We believe that emissions from treated tie stacks are dependent on the surface area of the stacks and that prudent stacking practices can assist in minimizing emissions.

Mr. Crumpler had valid questions, many of which AWPI members have also raised. We have modified the stacking geometries so that more surface areas are available from pole and tie stacks for emitting naphthalene. The calculations, other than the stacking geometries, remain valid given the stacking geometry and assumptions used in the model. **AquAeTer** wishes to continue to work with the AWPI Clean Air Act Subcommittee and the U.S. EPA in developing a technically sound and mutually acceptable procedure for calculating emissions from creosote-treated wood storage yards. If you should have questions or need additional information, please call us at (615) 373-8532 or by FAX at (615) 373-8512.

Sincerely,

AquAeTer, Inc.

Michael R. Corn, P.E.
President

Douglas S. Smith, E.I.T.
Project Chemical Engineer

John C. Uptmor
Project Manager

I, Michael R. Corn, P.E., have signed and sealed with this letter the model applicability for predicting black tie storage yard emissions from creosote-treated poles and black ties, given the database and assumptions presented.

Michael R. Corn

Michael R. Corn, P.E.
President

Dec 28, 1994
Date

Michael R. Corn
Dec 28, 1994

GEOMETRY of POLE STACKS

① TRAM

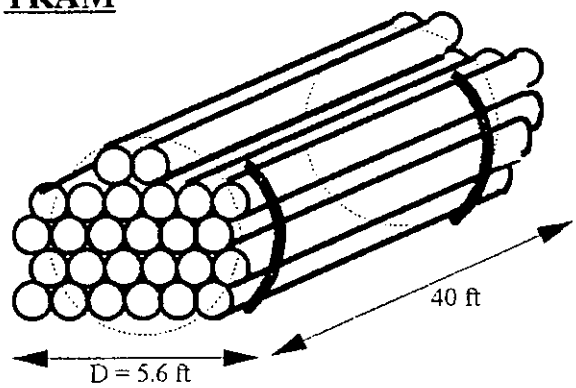

CYLINDRICAL SHAPE
24-28 POLES per TRAM
4-5 TRAMS per CHARGE
MAX EMISSION RATES ON TRAM

TIME ON TRAM 7-8 hours
TIME IN RAILTRUCK 16 hours
TOTAL TRAM SURFACE AREA =
753 ft²/TRAM

② 100 LAYOUT

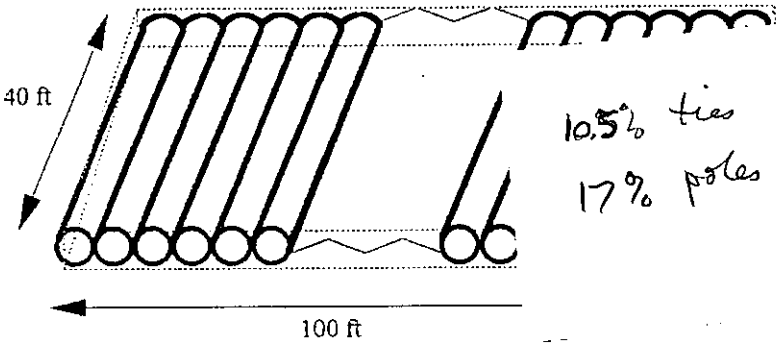

RECTANGULAR
100 POLES - 100% ASSAY
AYOUT AREA

E IN LAYOUT MAX 36 hours
PED OFF-SITE
UT SURFACE AREA =
8,350 ft²/LAYOUT

③ YARD LAYOUT

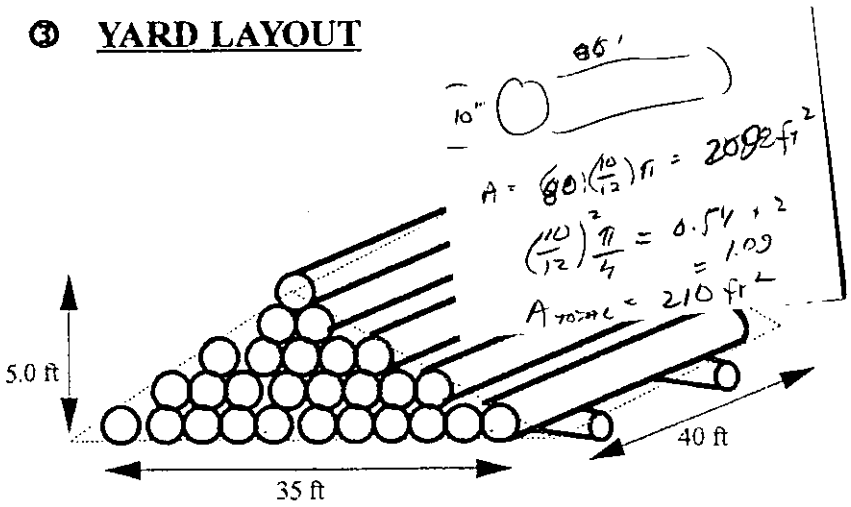

PYRAMIDAL SHAPE
80 POLES PER STACK
YARD AREA = 2,856 ft²/STACK

TIME IN YARD 3-4 months
MAXIMUM INVENTORY =
2,000 POLES

AquAeTer

GEOMETRY OF TIE STACKS

ONE TIE SURFACE AREA (7 in x 9 in x 8.5 ft) = 23.55 ft^2

① TRAM

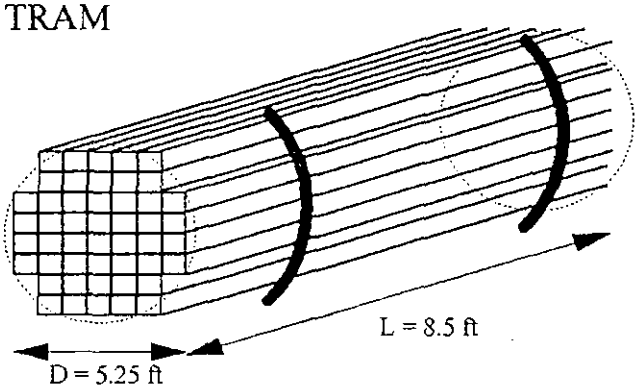

CYLINDRICAL SHAPE
46 TIES PER TRAM
17 TRAMS PER CHARGE
TOTAL TRAM SURFACE AREA = 183.5 ft^2

② BUNDLE

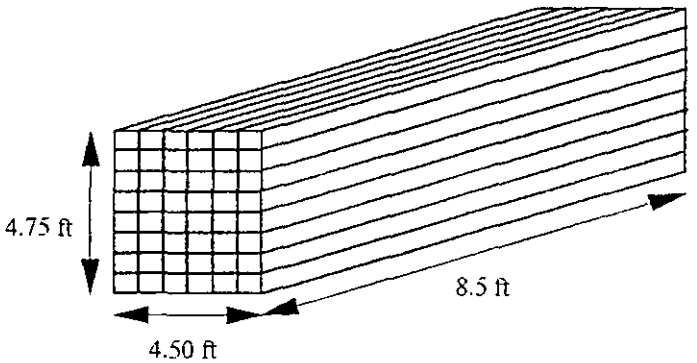

ASSUME 48 TIES = 1 BUNDLE
SURFACE AREA = 197.83 ft^2

③ YARD LAYOUT -1

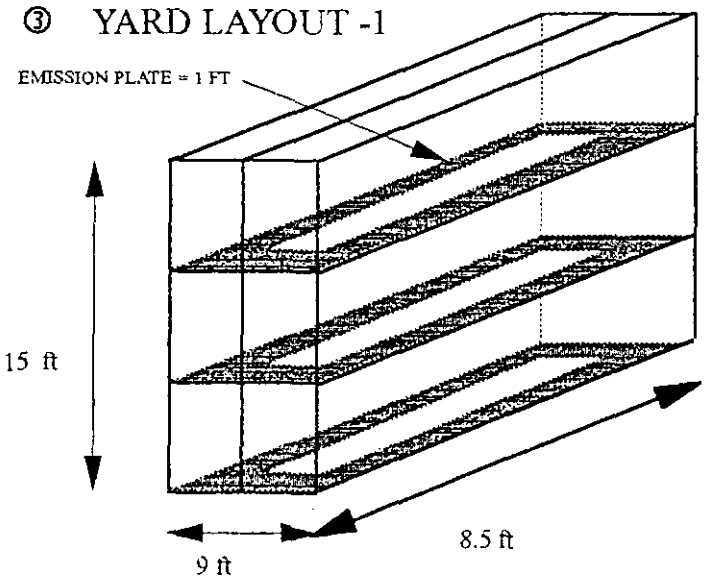

288 TIES IN 6 BUNDLES = 1 STACK
OUTSIDE SURFACE AREA = 601.5 ft^2
3 - 1 ft INTERIOR EMISSION PLATES = 105 ft^2
TOTAL MODEL SURFACE AREA = 706.5 ft^2

SURFACE AREA OF 288 STACKED TIES = SURFACE AREA OF INDIVIDUAL TIES

$$= \frac{706.5\ ft^2}{(23.55\ ft^2)(288)} \quad \frac{706.5\ ft^2}{6{,}782.4} = 0.1$$

STACKING RESULTS IN 91% REDUCTION IN SURFACE AREA FROM SINGLE TIES

93,888 TIES PLACED IN 326 STACKS = 1 UNIT/MONTH PRODUCED
SURFACE AREA = SURFACE AREA OF ONE STACK * 326 STACKS
or
706.5 ft^2 * 326 STACKS = 230,319 ft^2/UNIT

AquAeTer

GEOMETRY OF TIE STACKS

ONE TIE SURFACE AREA (7 in x 9 in x 8.5 ft) = 23.55 ft^2

① TRAM

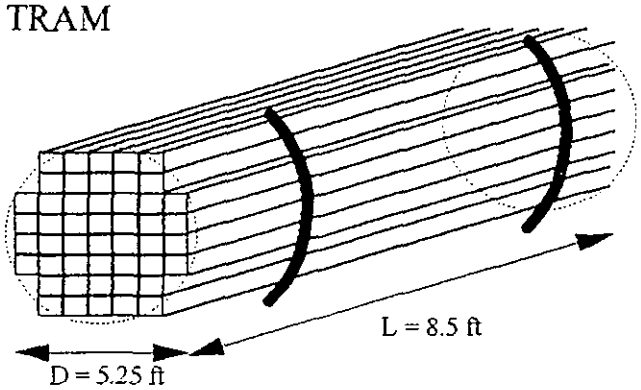

CYLINDRICAL SHAPE
46 TIES PER TRAM
17 TRAMS PER CHARGE
TOTAL TRAM SURFACE AREA = 183.5 ft^2

② BUNDLE

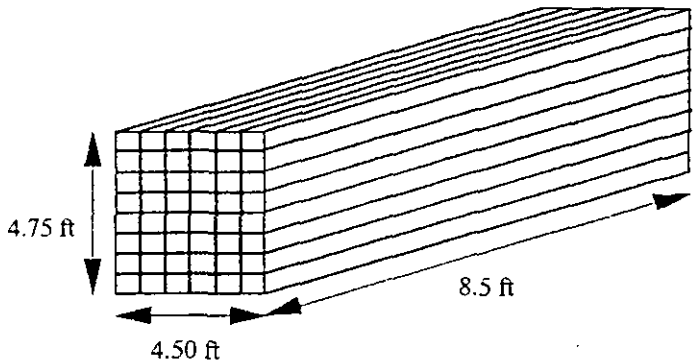

ASSUME 48 TIES = 1 BUNDLE
SURFACE AREA = 197.83 ft^2

③ YARD LAYOUT -2

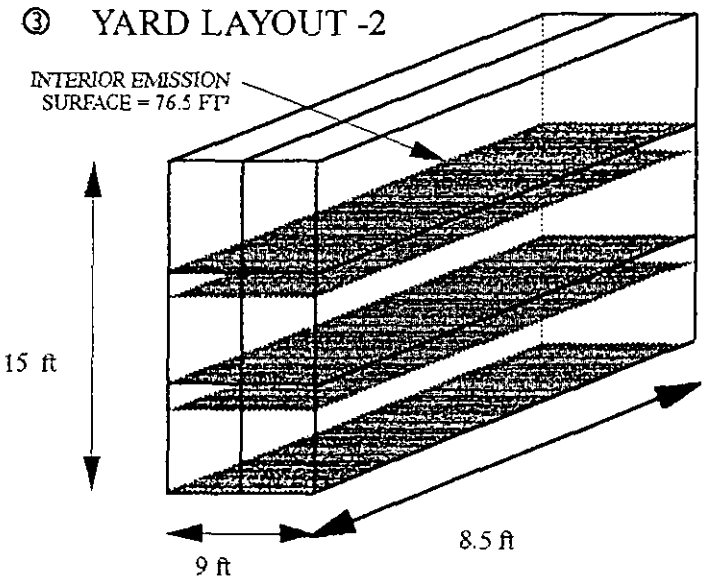

288 TIES IN 6 BUNDLES = 1 STACK
OUTSIDE SURFACE AREA = 601.5 ft^2
5 - 1 ft INTERIOR EMISSION SURFACES = 382.5 ft^2
TOTAL MODEL SURFACE AREA = 984 ft^2

SURFACE AREA OF 288 STACKED TIES = SURFACE AREA OF INDIVIDUAL TIES

$$= \frac{984\ ft^2}{(23.55\ ft^2)(288)} \quad \frac{984\ ft^2}{6{,}782.4} = 0.15$$

STACKING RESULTS IN 85% REDUCTION IN SURFACE AREA FROM SINGLE TIES

93,888 TIES PLACED IN 326 STACKS = 1 UNIT/MONTH PRODUCED
SURFACE AREA = SURFACE AREA OF ONE STACK * 326 STACKS
or
984 ft^2 * 326 STACKS = 320,784 ft^2/UNIT

AquAeTer

Table 1. Comparison of Surface Area and Emissions From Stack Geometry Modifications

Initial Surface Area of Stack (ft2)	601.5
Initial Total Yard Emissions (tpy)	2.78
Total Yard Inventory (ties)	469440
InitialPercent Total Yard S.S.A. Modeled	8

No. of Surfaces	Scenario Type	Increase In ft2	% Increase In S.S.A.	% Increase in Total Yard S.S.A.	% Total Yard S.S.A. Modeled	% Increase In Yard Emissions	Emissions tpy
3 - 1ft Emission Plates	Expected	105	17.4	2	10	13	3.19
5 - Whole Interior Surfaces	Worst Case	382.5	63.6	7	15	50	4.17

S.S.A. = Stack Surface Area (ft2)

f:\data\0176\task2\emiscomp.wk3

ESTIMATED NAPHTHALENE EMISSIONS FROM A BLACK POLE (CREOSOTE) STORAGE YARD

Facility	Koppers					
Location	Grenada, MS					
Max. Poles On Site	2,600					
Min. Poles On Site	2,600					
Poles/Unit	2,600					
S.A. of 80-Pole Stack	2,856	ft² (modeled as planar surfaces)				
Diameter of Test Pole	11	in				
Length of Test Pole	40	ft				
No. of Test Poles	6	poles				
S.A. of Test Poles	699	ft²				
Emissions (mg/hr):	N1(t) =	18,104	* exp (	0.46683	* t),	t <= 0.25 days
(Based on 6 poles with a	N2(t) =	36,697	* exp (	-2.43497	* t),	0.25 < t <= 1.0 day
699 ft² surface area)	N3(t) =	3,347	* exp (	-0.04358	* t),	t > 1.0 day
Emissions (lb/day/ft²):	N1(t) =	1.370E-03	* exp (	0.46683	* t),	t <= 0.25 days
(Based on 6 poles with a	N2(t) =	2.777E-03	* exp (	-2.43497	* t),	0.25 < t <= 1.0 day
699 ft² surface area)	N3(t) =	2.533E-04	* exp (	-0.04358	* t),	t > 1.0 day

Calculated 24-hr Average California Pole Test Temperature = 80 °F

Temperature Correction Factor for Other Geographic Locations = exp[-11,161.25*(1/(T, °F+460)-1/(80+460))]

Assumes 30 days/month

Month	Black Pole Units on Site	No. of Black Poles	No. of 80-Pole Stacks	Total Surface Area (ft²)	Percent of Poles __ Months Old: 0 mo. (0-30 d)	1 mo. (30-60 d)	2 mo. (60-90 d)	3 mo. (90-120 d)	4 mo. (120-150 d)	Tram Layout: Surface Area (2,600 poles/mo) (ft²/month)	N1 Rate (lb/ft²) 0-0.25 d	100 Pole Layout: Surface Area (2,600 poles/mo) (ft²/month)	N2 Rate (lb/ft²) 0.25-1.0 d	N3 Rate (lb/ft²) 1.0-1.5 d	Yard Emissions * Percent of Poles __ Months Old, Rate N3(t) Emissions (lb naphthalene/ft² treated wood): 1.5-30 d	30-60 d	60-90 d	90-120 d	120-150 d	Tram Sum	100 Layout Sum	Yard Sum	Columbus, MS Average Temperature (°F)	Temperature Correction Factor	Total Naphthalene Emissions (lb)
1	1.0	2,600	33	92,820	33.3	33.3	33.3			81,575	3.63E-04	217,100	5.21E-04	1.20E-04	1.29E-03	3.82E-04	1.03E-04	–	–	3.63E-04	6.41E-04	1.78E-03	41.2	0.202	67
2	1.0	2,600	33	92,820	33.3	33.3	33.3			81,575	3.63E-04	217,100	5.21E-04	1.20E-04	1.29E-03	3.82E-04	1.03E-04	–	–	3.63E-04	6.41E-04	1.78E-03	44.9	0.238	79
3	1.0	2,600	33	92,820	33.3	33.3	33.3			81,575	3.63E-04	217,100	5.21E-04	1.20E-04	1.29E-03	3.82E-04	1.03E-04	–	–	3.63E-04	6.41E-04	1.78E-03	52.6	0.331	111
4	1.0	2,600	33	92,820	33.3	33.3	33.3			81,575	3.63E-04	217,100	5.21E-04	1.20E-04	1.29E-03	3.82E-04	1.03E-04	–	–	3.63E-04	6.41E-04	1.78E-03	62.6	0.502	168
5	1.0	2,600	33	92,820	33.3	33.3	33.3			81,575	3.63E-04	217,100	5.21E-04	1.20E-04	1.29E-03	3.82E-04	1.03E-04	–	–	3.63E-04	6.41E-04	1.78E-03	70.4	0.688	230
6	1.0	2,600	33	92,820	33.3	33.3	33.3			81,575	3.63E-04	217,100	5.21E-04	1.20E-04	1.29E-03	3.82E-04	1.03E-04	–	–	3.63E-04	6.41E-04	1.78E-03	77.7	0.915	305
7	1.0	2,600	33	92,820	33.3	33.3	33.3			81,575	3.63E-04	217,100	5.21E-04	1.20E-04	1.29E-03	3.82E-04	1.03E-04	–	–	3.63E-04	6.41E-04	1.78E-03	80.9	1.035	345
8	1.0	2,600	33	92,820	33.3	33.3	33.3			81,575	3.63E-04	217,100	5.21E-04	1.20E-04	1.29E-03	3.82E-04	1.03E-04	–	–	3.63E-04	6.41E-04	1.78E-03	80.1	1.004	335
9	1.0	2,600	33	92,820	33.3	33.3	33.3			81,575	3.63E-04	217,100	5.21E-04	1.20E-04	1.29E-03	3.82E-04	1.03E-04	–	–	3.63E-04	6.41E-04	1.78E-03	74.1	0.796	266
10	1.0	2,600	33	92,820	33.3	33.3	33.3			81,575	3.63E-04	217,100	5.21E-04	1.20E-04	1.29E-03	3.82E-04	1.03E-04	–	–	3.63E-04	6.41E-04	1.78E-03	62.3	0.496	166
11	1.0	2,600	33	92,820	33.3	33.3	33.3			81,575	3.63E-04	217,100	5.21E-04	1.20E-04	1.29E-03	3.82E-04	1.03E-04	–	–	3.63E-04	6.41E-04	1.78E-03	51.1	0.311	104
12	1.0	2,600	33	92,820	33.3	33.3	33.3			81,575	3.63E-04	217,100	5.21E-04	1.20E-04	1.29E-03	3.82E-04	1.03E-04	–	–	3.63E-04	6.41E-04	1.78E-03	44.1	0.229	77

Annual Production: 31,200 poles/yr

11:52 AM 28-Dec-94 0.750 million ft²/yr

Emissions for maximum on-site storage of 7800 poles is:

Total (lb/yr) 2,251

Total (ton/yr) 1.13

f:\data\0176\newpole2.wk3

ESTIMATED NAPHTHALENE EMISSIONS FROM A BLACK TIE STORAGE YARD

Facility	Kerr-McGee Chemical Corporation				
Location	Avoca, PA				
Max. Ties On Site	469,440	(Maximum Scenario - On-site Maximum is Normally 200,000 ties.)			
Min. Ties On Site	93,888				
Ties/Unit	93,888				
S.A. of Six 48-tie Bundles	984.0	ft²			
Diameter of Test Pole	11	in			
Length of Test Pole	40	ft			
No. of Test Poles	6	poles			
S.A. of Test Poles	699	ft²			
Emissions (mg/hr):	N1(t) =	18,104	* exp (	0.46683 * t),	t <= 0.25 days
(Based on 6 poles with a	N2(t) =	36,697	* exp (	-2.43497 * t),	0.25 < t <= 1.0 day
699 ft² surface area)	N3(t) =	3,347	* exp (	-0.04358 * t),	t > 1.0 day
Emissions (lb/day/ft²):	N1(t) =	1.370E-03	* exp (	0.46683 * t),	t <= 0.25 days
(Based on 6 poles with a	N2(t) =	2.777E-03	* exp (	-2.43497 * t),	0.25 < t <= 1.0 day
699 ft² surface area)	N3(t) =	2.533E-04	* exp (	-0.04358 * t),	t > 1.0 day
Calculated 24-hr Average California Pole Test Temperature =				80 °F	
Temperature Correction Factor for Other Geographic Locations =				exp[-11,161.25*(1/(T, °F+460)-1/(80+460)]	
Assumes 30 days/month					

Month	Black Tie Units on Site	No. of Black Ties	No. of 288-Tie Stacks	Total Yard Surface Area (ft²)	Percent of Ties __ Months Old: 0 mo. 0-30 d	1 mo. 30-60 d	2 mo. 60-90 d	3 mo. 90-120 d	4 mo. 120-150 d	Tram Emissions: Surface Area (93,888 ties/mo) (ft²/month)	N1 Rate (lb/ft²) 0-0.25 d	N2 Rate (lb/ft²) 0.25-1.0 d	Yard Emissions * Percent of Ties __ Months Old: Rate N3(t) Emissions (lb naphthalene/ft² treated surface area) 1.0-30 d	30-60 d	60-90 d	90-120 d	120-150 d	Tram Sum	Yard Sum	Scranton, PA Average Temperature (°F)	Temperature Correction Factor	Total Naphthalene Emissions (lb)
1	3	281,664	978	962,352	33.3	33.3	33.3			374,531	3.63E-04	5.21E-04	1.33E-03	3.82E-04	1.03E-04			8.84E-04	1.82E-03	25.2	0.097	201
2	4	375,552	1,304	1,283,136	25.0	25.0	25.0	25.0		374,531	3.63E-04	5.21E-04	9.98E-04	2.87E-04	7.76E-05	2.10E-05		8.84E-04	1.38E-03	26.8	0.104	220
3	5	469,440	1,630	1,603,920	20.0	20.0	20.0	20.0	20.0	374,531	3.63E-04	5.21E-04	7.99E-04	2.29E-04	6.21E-05	1.68E-05	4.54E-06	8.84E-04	1.11E-03	36.1	0.161	339
4	4.43	415,790	1,444	1,420,615	22.6	22.6	22.6	22.6	9.7	374,531	3.63E-04	5.21E-04	9.02E-04	2.59E-04	7.01E-05	1.90E-05	2.20E-06	8.84E-04	1.25E-03	48.3	0.276	581
5	3.86	362,139	1,257	1,237,310	25.9	25.9	25.9	22.2		374,531	3.63E-04	5.21E-04	1.04E-03	2.97E-04	8.05E-05	1.87E-05		8.84E-04	1.43E-03	58.6	0.426	896
6	3.29	308,489	1,071	1,054,005	30.4	30.4	30.4	8.7		374,531	3.63E-04	5.21E-04	1.22E-03	3.49E-04	9.45E-05	7.30E-06		8.84E-04	1.67E-03	67.4	0.610	1,274
7	2.71	254,839	885	870,699	36.8	36.8	26.3			374,531	3.63E-04	5.21E-04	1.47E-03	4.23E-04	8.17E-05			8.84E-04	1.98E-03	71.8	0.727	1,491
8	2.14	201,189	699	687,394	46.7	46.7	6.7			374,531	3.63E-04	5.21E-04	1.86E-03	5.35E-04	2.07E-05			8.84E-04	2.42E-03	70.0	0.677	1,350
9	1.57	147,538	512	504,089	63.6	36.4				374,531	3.63E-04	5.21E-04	2.54E-03	4.17E-04				8.84E-04	2.96E-03	62.8	0.507	923
10	1	93,888	326	320,784	100.0					374,531	3.63E-04	5.21E-04	3.99E-03					8.84E-04	3.99E-03	51.7	0.319	514
11	1	93,888	326	320,784	100.0					374,531	3.63E-04	5.21E-04	3.99E-03					8.84E-04	3.99E-03	40.9	0.199	321
12	2	187,776	652	641,568	50.0	50.0				374,531	3.63E-04	5.21E-04	2.00E-03	5.74E-04				8.84E-04	2.57E-03	29.7	0.120	237

Annual Production: 1.127 million ties/yr

11:48 AM 28-Dec-94 4.190 million ft²/yr

Emissions for maximum on-site storage of 469440 ties is: Total (lb/yr) 8,348

Total (tons/yr) 4.17

f:data\0176\new-tie2.wk3