Note: This is a reference cited in *AP 42, Compilation of Air Pollutant Emission Factors, Volume I Stationary Point and Area Sources.* AP42 is located on the EPA web site at www.epa.gov/ttn/chief/ap42/

The file name refers to the reference number, the AP42 chapter and section. The file name "ref02_c01s02.pdf" would mean the reference is from AP42 chapter 1 section 2. The reference may be from a previous version of the section and no longer cited. The primary source should always be checked.

CONTENTS

		Page
Figures		iv
Tables		v
1	Introduction	1
2	Summary of Results	2
3	Process Description	8
4	Location of Sampling Points	13
5	Sampling and Analytical Methods	15
APPENDICES		
A	Complete Emission Results	A-1
B	Project Participants	B-1

FIGURES

Figures		Page
1	Exhaust gas velocity and temperature over the charcoal burn cycle, Kiln #8, Kingsford Charcoal, Burnside, Kentucky, May 2-6, 1980.	3
2	Carbon monoxide concentration in the exhaust gas of Kiln #8 over the burn cycle, Kingsford Charcoal, Burnside, Kentucky, May 2-6, 1980. . .	4
3	Total hydrocarbon concentration in the exhaust gas of Kiln #8 over the burn cycle, Kingsford Charcoal, Burnside, Kentucky, May 2-6, 1980. . .	6
4	"Missouri-type" charcoal kiln.	9
5	Plot plan of Kingsford Charcoal-Burnside Plant, batch kiln area.	11
6	Schematic diagram of afterburner emission control on set of four charcoal kilns, Kingsford-Burnside Plant	12
7	Sampling port location in exhaust duct from charcoal Kiln #8, Kingsford Charcoal, Burnside, Kentucky	14
8	Total hydrocarbon analyzer sampling assembly . . .	16
9	Carbon monoxide analyzer sampling assembly	18
10	Final continuous monitoring equipment assembly for THC and CO, Kingsford Charcoal, Burnside, Kentucky	20

CHARCOAL

Emission Test Report

Kingsford Charcoal
Burnside, Kentucky

May 1-6, 1980

Project No.: 80-CHR-1

Prepared for

Environmental Protection Agency
Office of Air Quality Planning and Standards
Emission Measurement Branch
Research Triangle Park, NC 27711

by

James A. Peters and M. Timothy Thalman

Contract 68-02-2818, Work Assignment No. 28

August 1980

MONSANTO RESEARCH CORPORATION
DAYTON LABORATORY
1515 Nicholas Road
Dayton, Ohio 45407

TABLES

Table		Page
1	Summary of Integrated Gas Analysis Results, Kingsford Charcoal, Burnside, Kentucky, May 3-5, 1980.	7
2	Summary of Stack Gas Moisture Determinations, Kingsford Charcoal, Burnside, Kentucky, May 3-5, 1980.	7

SECTION 1

INTRODUCTION

The Kingsford Charcoal Plant in Burnside, Kentucky, was emission tested by Monsanto Research Corporation (MRC) for the U.S. Environmental Protection Agency (EPA) under Contract 68-02-2818, Work Assignment Number 28. The objective of the sampling program was to collect background information on charcoal kiln emissions which may lead to the development of source performance standards.

The field test was monitored by Frank Clay, Field Testing Section, Emission Measurement Branch, EPA. The sampling conducted by MRC was directed by Tim Thalman as team leader. Carbon monoxide (CO) and total hydrocarbons (THC) were continuously monitored in the exhaust duct leading to an afterburner control device over the entire charcoal production cycle. Exhaust gas temperature, velocity, and moisture were determined on a periodic basis.

Sampling at the Burnside Plant was conducted by MRC during May 1-6, 1980. The monitoring techniques employed were non-dispersive infrared (NDIR) analysis for CO, and flame-ionization detection (FID) for THC. Moisture was determined by EPA Method 4.

Quality assurance/quality control in the sampling area covered such activities as instrument calibration, using standard or approved sampling methods, chain-of-custody procedures, and protocols for the recording and calculation of data. QA/QC in the analysis area involved using only validated analysis methods, periodic operator QC checking and training, and sample QC by the use of NBS traceable reference standards.

SECTION 2

SUMMARY OF RESULTS

Pollutants which were measured for this emission test were total hydrocarbons and carbon monoxide, both determined by continuous monitoring instrumentation. In addition, gas velocity and temperature were recorded every 15 minutes and moisture was determined about every 12 hours.

The Kingsford Charcoal Plant in Burnside operates twenty batch kilns. Kiln #8 was emission tested over the burn cycle of the process. Although emissions are controlled by an afterburner, samples were taken before the control device to characterize uncontrolled emissions during the burn cycle of charcoal production.

Kiln #8 was loaded with dry wood in the form of lumbermill ends in bundles on May 2. The burn was initiated by a fuel oil torch, the doors and vents closed and sealed with wet mortar, and sampling began at about 1 p.m. that day.

Kiln exhaust gas velocity and temperature are shown in Figure 1 over the duration of the burn cycle. Gas velocity is not induced by a fan or other air mover, but allowed to draught naturally. Kiln operators slow and speed the burn progress by limiting inlet air, much like a domestic wood stove operates. Consequently, gas velocity fluctuates over a factor of two throughout the cycle. Exhaust gas temperature, however, climbs slowly from about 100°F initially to nearly 500°F near the end of the burn, with a sharp rise at the end of day 3.

Carbon monoxide concentration as a function of time over the burn cycle is illustrated in Figure 2. The CO values reported in ppm represent the concentration as seen by the CO analyzer, i.e., after CO_2 has been removed. Thus, actual values are approximately 10-15% higher. The drop in CO levels which occurred at around 12:00 Noon on May 4 may be related to a slowdown in the burn, since the gas velocity and temperature also dropped at this time.

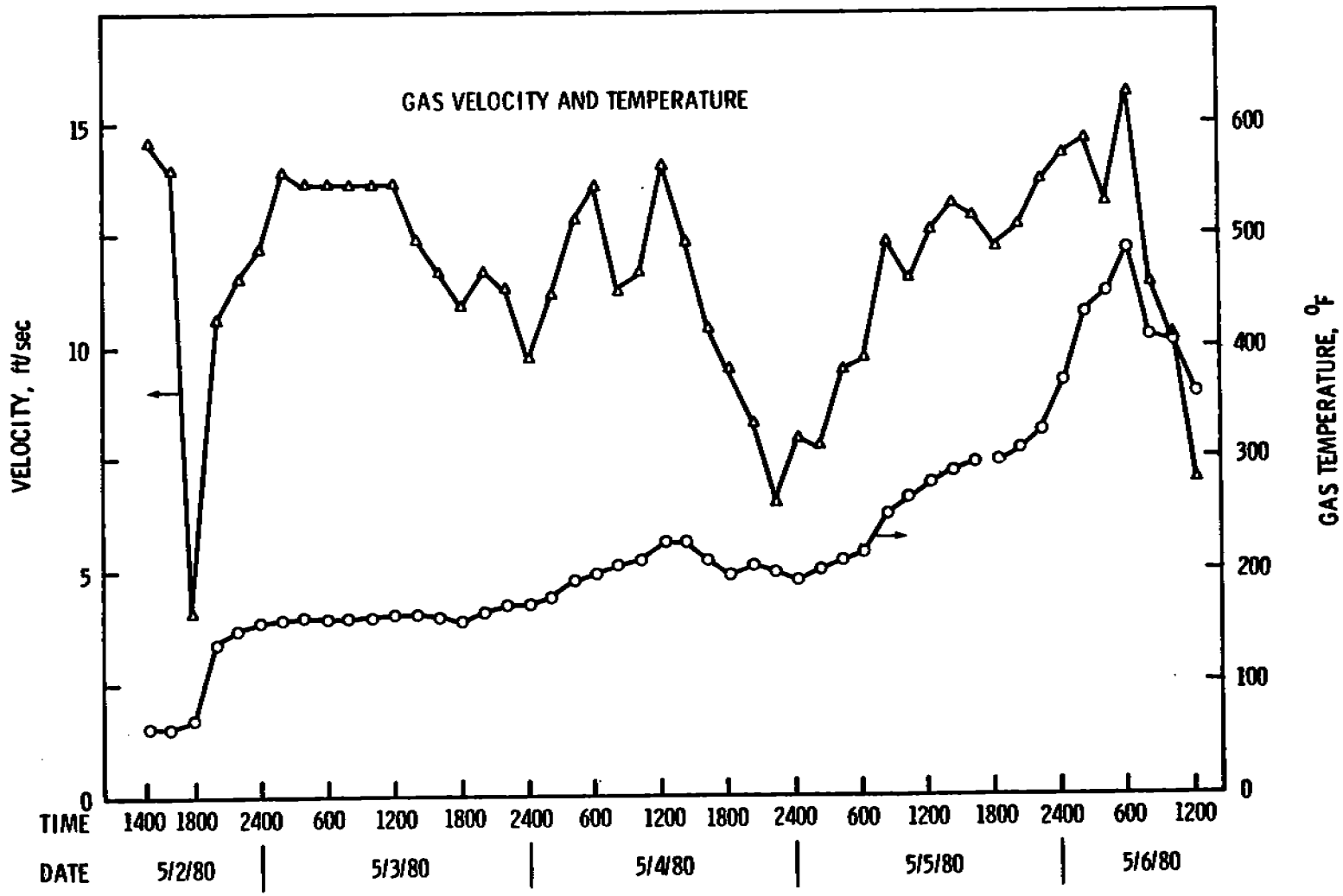

Figure 1. Exhaust gas velocity and temperature over the charcoal burn cycle, Kiln #8, Kingsford Charcoal, Burnside, Kentucky, May 2-6, 1980.

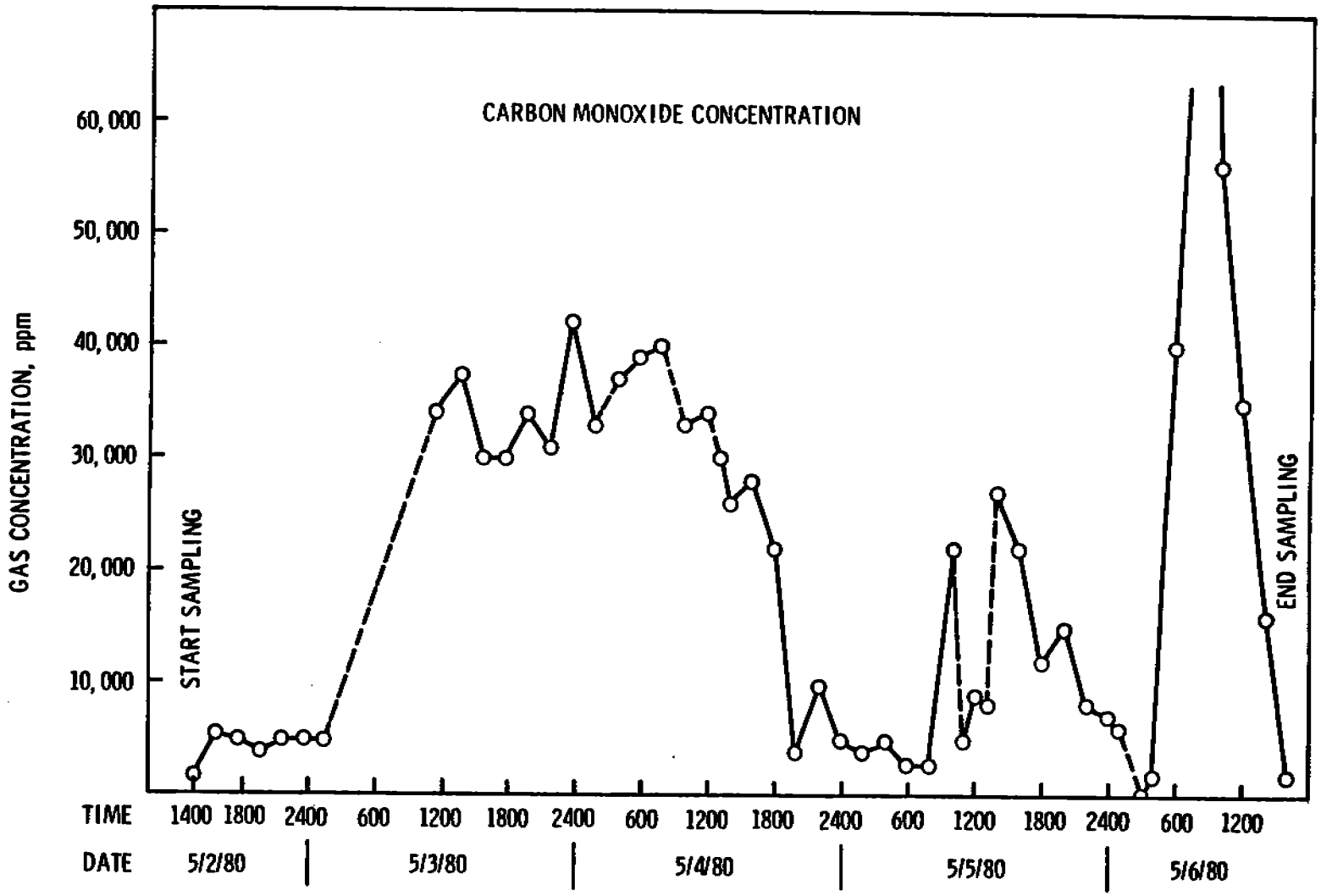

Figure 2. Carbon monoxide concentration in the exhaust gas of Kiln #8 over the burn cycle, Kingsford Charcoal, Burnside, Kentucky, May 2-6, 1980.

A similar trend was observed for total hydrocarbons (THC) over the burn cycle, as shown in Figure 3. A decrease in concentration occurred at the end of May 3 (day 2), before rising to top earlier concentration levels near the end of the burn. The two curves in Figure 3 represent gas concentrations with and without a condenser in the sample line, used to knock out moisture and heavier, tarry organics in order to protect the flame ionization detector of the monitoring instrument and the calibrated flowmeter. Complete CO and THC results are furnished in Appendix A.

Integrated gas analysis results are summarized in Table 1. Levels of CO_2 rose during the burn, while CO, O_2, and N_2 changed. Moisture determinations are summarized in Table 2. Moisture levels in the exhaust gas rose from 32% to 48% at day 2 as water is driven off from the wood, then dropped to 36% near the end of the cycle.

The charcoal kiln operated normally throughout the emission test. Thus, the emission results should be representative of uncontrolled emissions during normal kiln operation during the burn cycle.

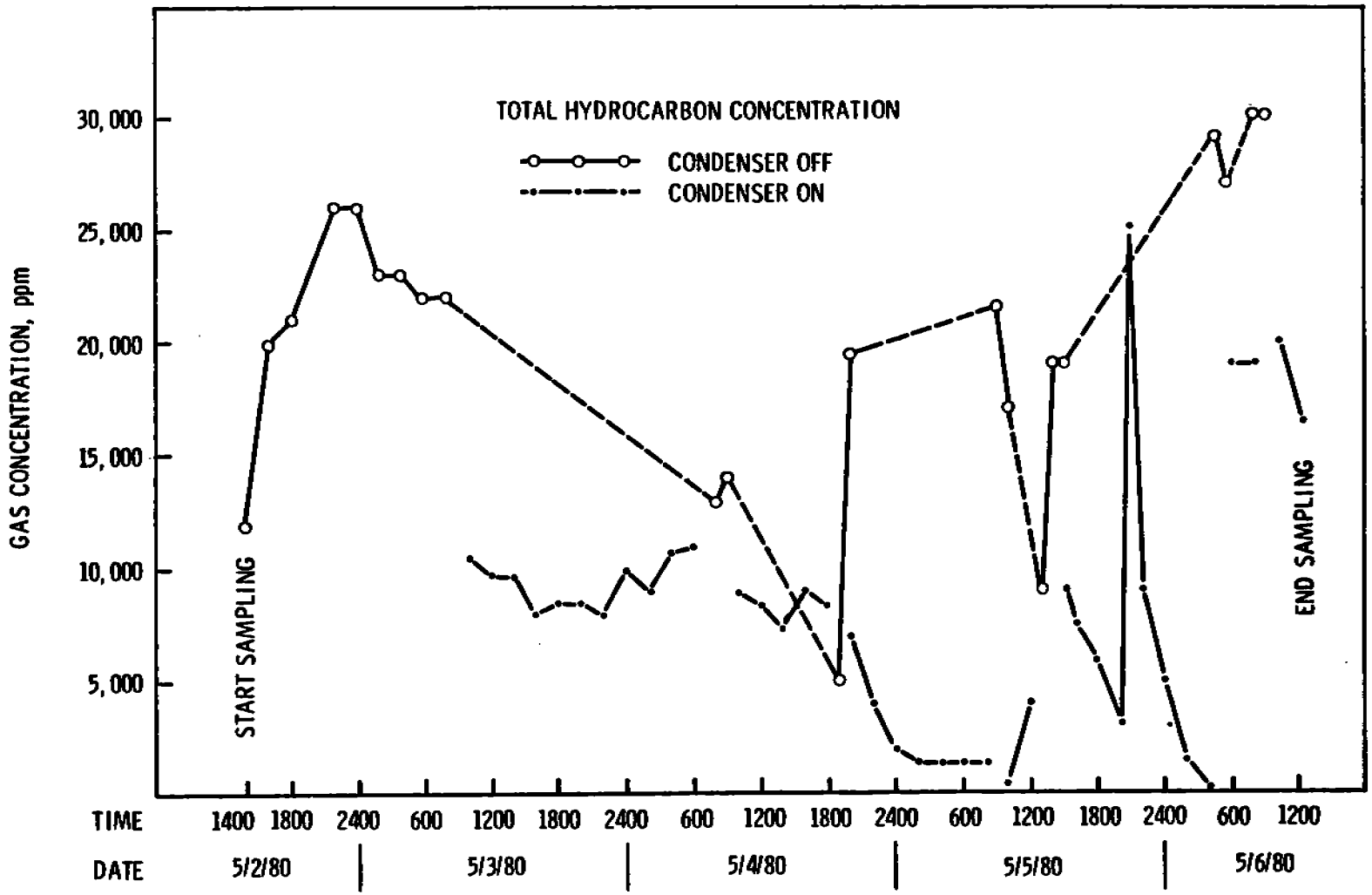

Figure 3. Total hydrocarbon concentration in the exhaust gas of Kiln #8 over the burn cycle, Kingsford Charcoal, Burnside, Kentucky, May 2-6, 1980.

TABLE 1. SUMMARY OF INTEGRATED GAS ANALYSIS RESULTS, KINGSFORD CHARCOAL, BURNSIDE, KENTUCKY, MAY 3-5, 1980

Date	Time	CO_2, %	CO, %	O_2, %	N_2, %	Molecular weight, lb/lb mole
5/3/80	2210	9.5	3.5	6.0	81.0	29.78
5/4/80	1700	11.0	2.5	3.25	83.25	29.89
5/5/80	1800	16.2	1.4	9.3	73.1	30.97

TABLE 2. SUMMARY OF STACK GAS MOISTURE DETERMINATIONS, KINGSFORD CHARCOAL, BURNSIDE, KENTUCKY, MAY 3-5, 1980

Date	Time	Percent moisture
5/3/80	0110-0218	32.00[a]
5/3/80	1808-1908	34.00[a]
5/3/80	1951-2021	35.00[a]
5/4/80	0232-0332	41.91
5/4/80	0419-0519	41.43
5/4/80	0555-0711	43.29
5/4/80	1200-1345	48.39
5/4/80	1600-1630	47.04
5/5/80	0100-0214	38.80
5/5/80	1318-1418	41.22
5/5/80	1603-1633	36.08

[a]Values for saturated air at corresponding stack temperature.

SECTION 3

PROCESS DESCRIPTION

The Kingsford Charcoal Plant in Burnside, Kentucky, produces charcoal in a batch process, using "Missouri-type" kilns as shown in Figure 4. The kilns are constructed of concrete and process 90-110 tons of wood per batch. Charcoal is produced by packing the kiln tightly with split wood (about firewood size) and lighting the wood with a diesel fuel torch. The steel doors are closed on the kiln and air is drawn through side ports from below the kiln. During ignition, a large amount of air is necessary for rapid combustion to insure the heat level needed for pyrolysis. A typical cycle may include the following time frame:

1/2 day	load,
3 to 5 days	burn,
3 to 4 days	seal and cool,
1/2 day	unload,

for a total turn-around batch time of 7-9 days, depending on initial moisture content of the wood. The emission test was conducted during the 3-5 day burn period.

For the production of good-quality charcoal, kiln temperatures of at least 600°F are required. Prolonged higher temperatures will reduce the yield of charcoal without necessarily upgrading it for recreational use. If, on the other hand, pyrolysis temperatures remain low, the charcoal may be too "smokey" for domestic use, and larger than normal amounts of brands (partially charred wood) will be produced.

The direction and rate of spread of the pyrolysis zone are associated with a number of factors, such as location of air ports and stacks, volume and velocity of the incoming air, wood size and moisture content, piling of the charge, and design of the kiln. At the Burnside Plant, the rate of burn is controlled by placing bricks across the air inlet ports and manually adjusting air intake by brick positioning. Also, mortar, cement, or clay mud is packed against the steel door edges and top vents to further seal the kiln and better control the burn rate.

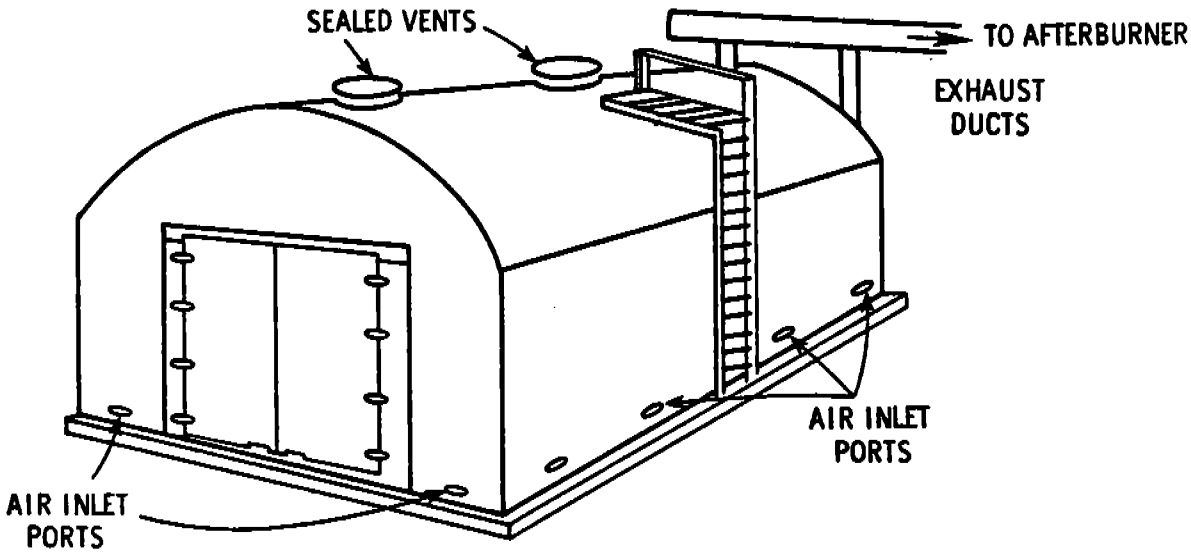

Figure 4. "Missouri-type" charcoal kiln.

Pyrolysis generally proceeds at a faster rate at the upper part of the charge, where higher temperatures are available for longer periods of time. Less rapid pyrolysis takes place near the kiln floor, where the average temperature usually is lowest. In the "Missouri-type" kiln, combustion and carbonization progress from the top of the kiln to the floor.

Burn progress in kilns with uncontrolled emissions can be determined by the color of the smoke from the kiln or by determining the temperature along the vertical distance of the steel doors. The pyrolysis is completed when fire has reached the floor of the kiln as determined by view ports (air intake ports) at the floor level. This may also be indicated by a marked decrease in the volume of smoke and a color change from muddy white on day 3 to muddy gray on day 4. Opacity is about 80% on the last day due to the high concentration of tars in the exhaust. At Kingford-Burnside the kiln tested had an afterburner for emission control.

When pyrolysis has been completed, all air ports are sealed for the start of the cooling cycle. After the ports are sealed, the stacks remain open until smoking has practically stopped to prevent the development of gas pressure in the kiln. Stacks can usually be sealed from 1 hr to 2 hr after the air ports are

closed. This is done with slide plates in a junction box located near the bottom of each exhaust duct.

At Burnside the kilns are allowed to cool for about 1 day before removing the charcoal. Water is sprayed on top of the kiln to facilitate cooling. Yields of about 20-25 tons of charcoal are achieved.

At Burnside, charcoal is batch-produced in 20 separate "Missouri-type" kilns. A plot plan of the batch kiln area of the Kingsford Plant is depicted in Figure 5. Emissions during pyrolysis are controlled by an afterburner which services a set of four kilns, as shown in Figure 6. Two 16-inch circular ducts exit near the bottom of the kiln end and then join a common 25-inch diameter duct leading to the afterburner, which is centrally placed with two kilns on each side. Sampling was conducted in the common duct, before the afterburner.

Each afterburner is equipped with two fuel oil burners and one blower for combustion air. No. 2 fuel oil is used as auxiliary fuel for the afterburners, although plant personnel usually schedule kiln rotation so that three out of four kilns are running (either in the pyrolysis or cooling stage) in order to minimize auxiliary fuel usage.

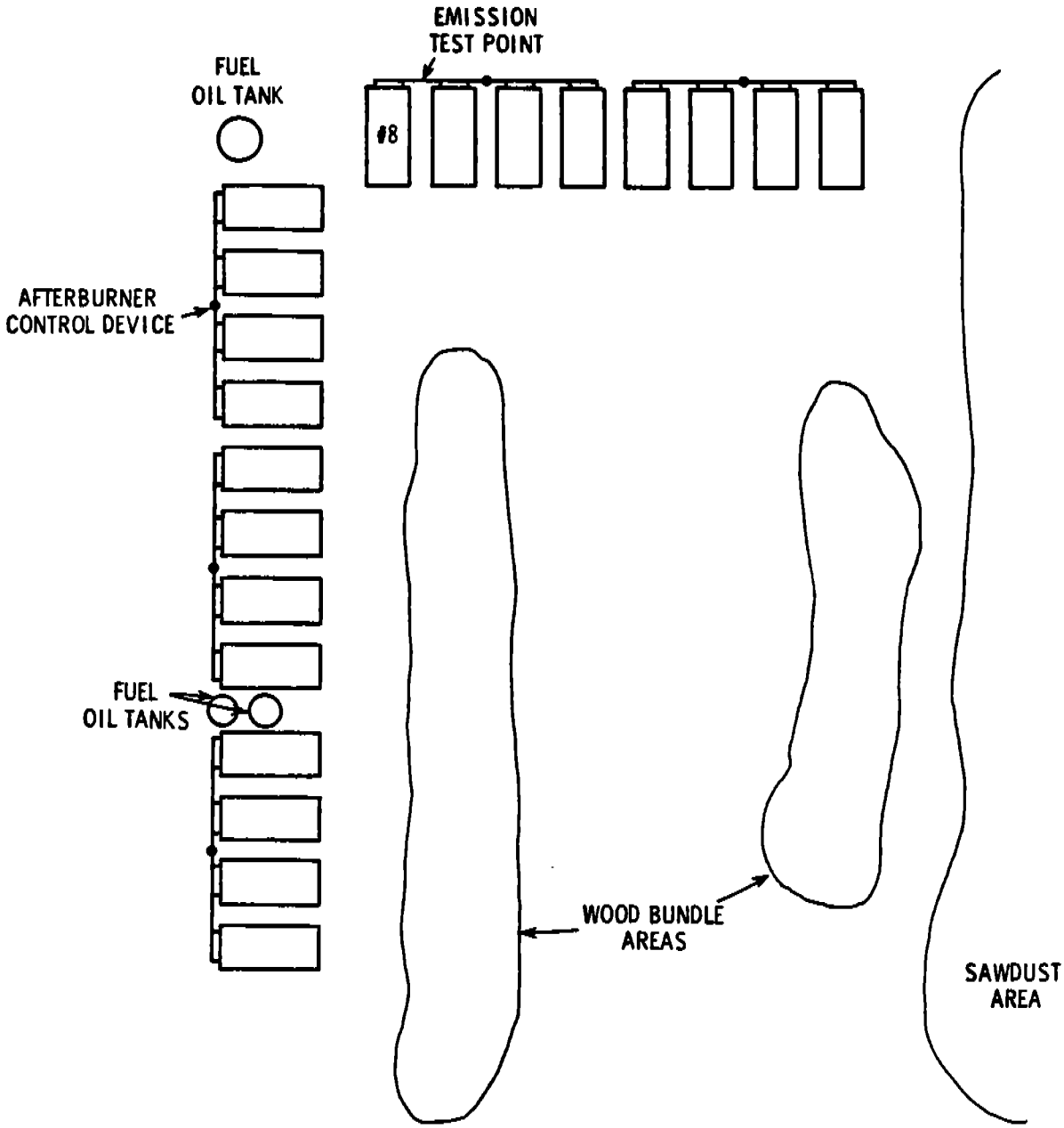

Figure 5. Plot plan of Kingsford Charcoal-Burnside Plant, batch kiln area.

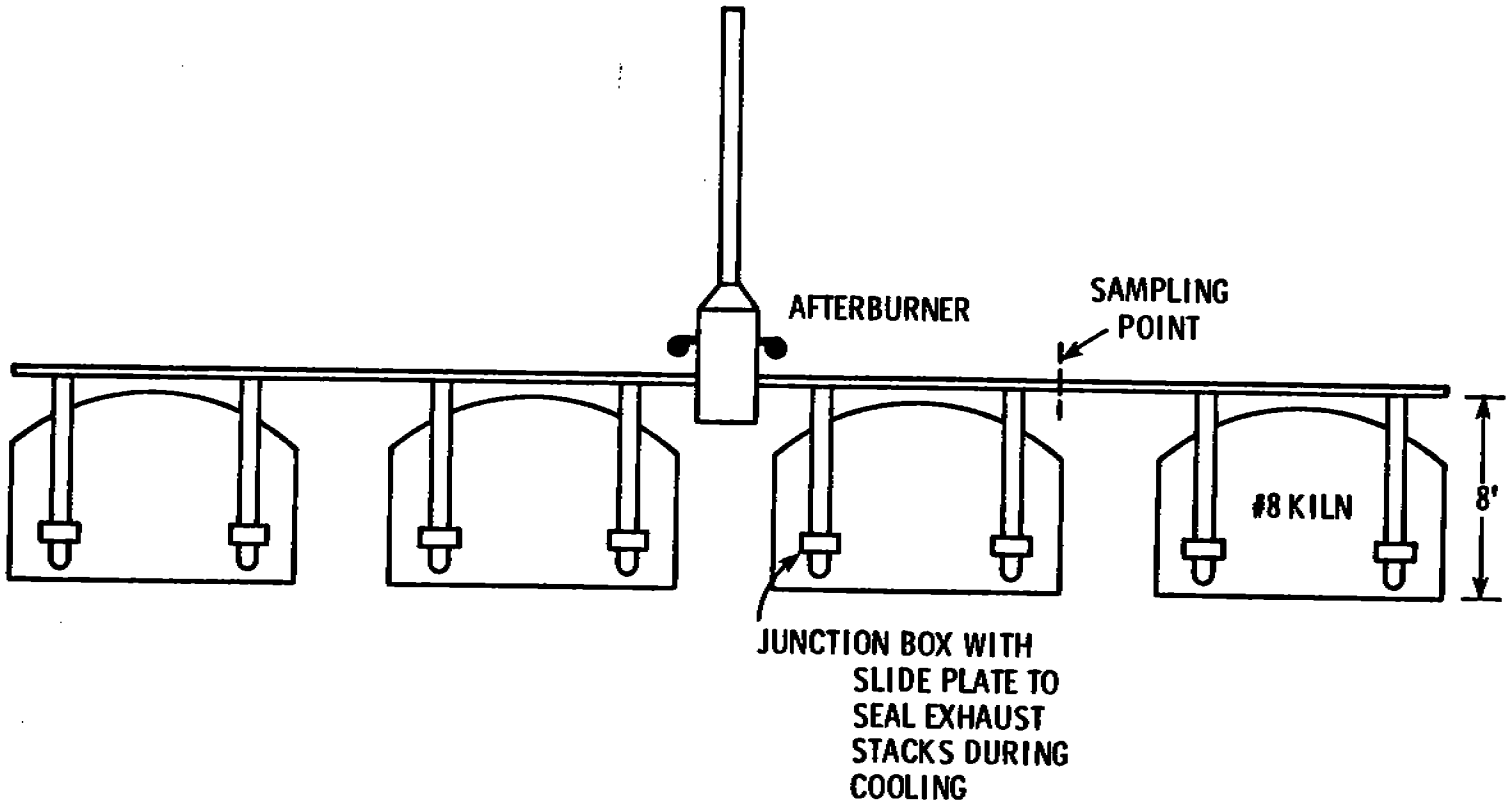

Figure 6. Schematic diagram of afterburner emission control on of four charcoal kilns, Kingsford-Burnside Plant.

SECTION 5

SAMPLING AND ANALYTICAL PROCEDURES

The Kingsford Charcoal Burnside Plant was emission tested for total hydrocarbons, CO, and integrated gas analysis. The following describes the methods used.

TOTAL HYDROCARBONS

Total hydrocarbons were measured using a Beckman 402 Hydrocarbon Analyzer. The analysis is based on flame ionization, a highly sensitive detection method. Figure 8 illustrates the filter/probe and instrument assembly that was originally set up for sampling at the start of the charcoal burn.

Two in-stack stainless steel small mesh screen filters were protected by an outer stainless steel sheath with the inlet holes pointing away from the gas flow. The sheath allowed any tars or creosote to adhere to its walls rather than the inner screen filter and prevented screen plugging. The filters were also protected by a 100 psi air pump which was used to blow back any condensed organics/particulate matter. An electrical three-way valve was connected to each filter and a timer was set to actuate the three-way valve every 15 minutes to discontinue sampling and blow out the filters. The blow-back lasted 3.75 minutes and the sampling 11.25 minutes. Of the two in-stack filters, one filter was for the THC sample line and one filter was for the CO sample line. However, blow-back and sampling occurred simultaneous on both filters to eliminate any possible dilution air contamination of either sample line during the blow-back cycle. From each separate three-way valve a heated teflon-lined flexible tube directed the sample gas to the THC analyzer, and an unheated teflon-lined tube went to the CO analyzer.

For the THC analyzer, the sample gas was originally directed to the analyzer with no sample conditioning other than maintaining a 375°F gas temperature. However, as anticipated, after about 20 hours of sampling, the increase in moisture and organics in the sample gas caused the unheated flowmeter on the THC analyzer to operate inefficiently because of condensation. Since the flowmeter provided one basis for accurate calibration of the analysis system, a coil condenser was added between the heated flexline and the electrical three-way valve.

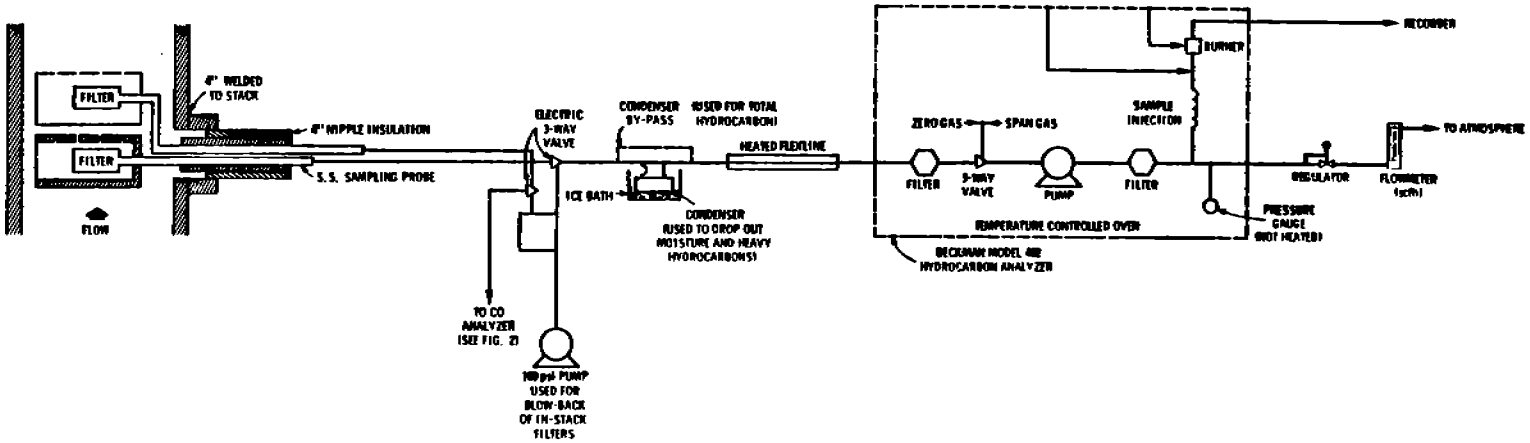

Figure 8. Total hydrocarbon analyzer sampling assembly.

SECTION 4

LOCATION OF SAMPLING POINT

The location sampled was the #8 kiln exhaust, before the after-burner control device, in order to obtain uncontrolled emissions data. Figure 7 illustrates the sampling port location.

As a result of the presurvey visit and preliminary traverse, it was found that the exhaust velocity was very low (about 6 ft/sec) in each of the twin ducts. Also, because the sampling program involved continuous monitoring, frequent switching between ducts would have been necessary. Thus, in order to counter these difficulties, a pair of sampling ports were installed in the common duct downstream from the twin exhaust ducts to allow for a higher flow rate and elimination of duct switching. The location of the new ports is shown in Figure 7, their position as far downstream (2.3 diameters) from the elbow joint disturbance as feasible. Two 4-inch diameter ports were installed at the 12 o'clock and 9 o'clock positions in the 25-1/4 inch duct as one faces downstream.

Inside the common duct was found 11 inches of solidified tars (creosote), up to the lower lip of the horizontal sampling port.

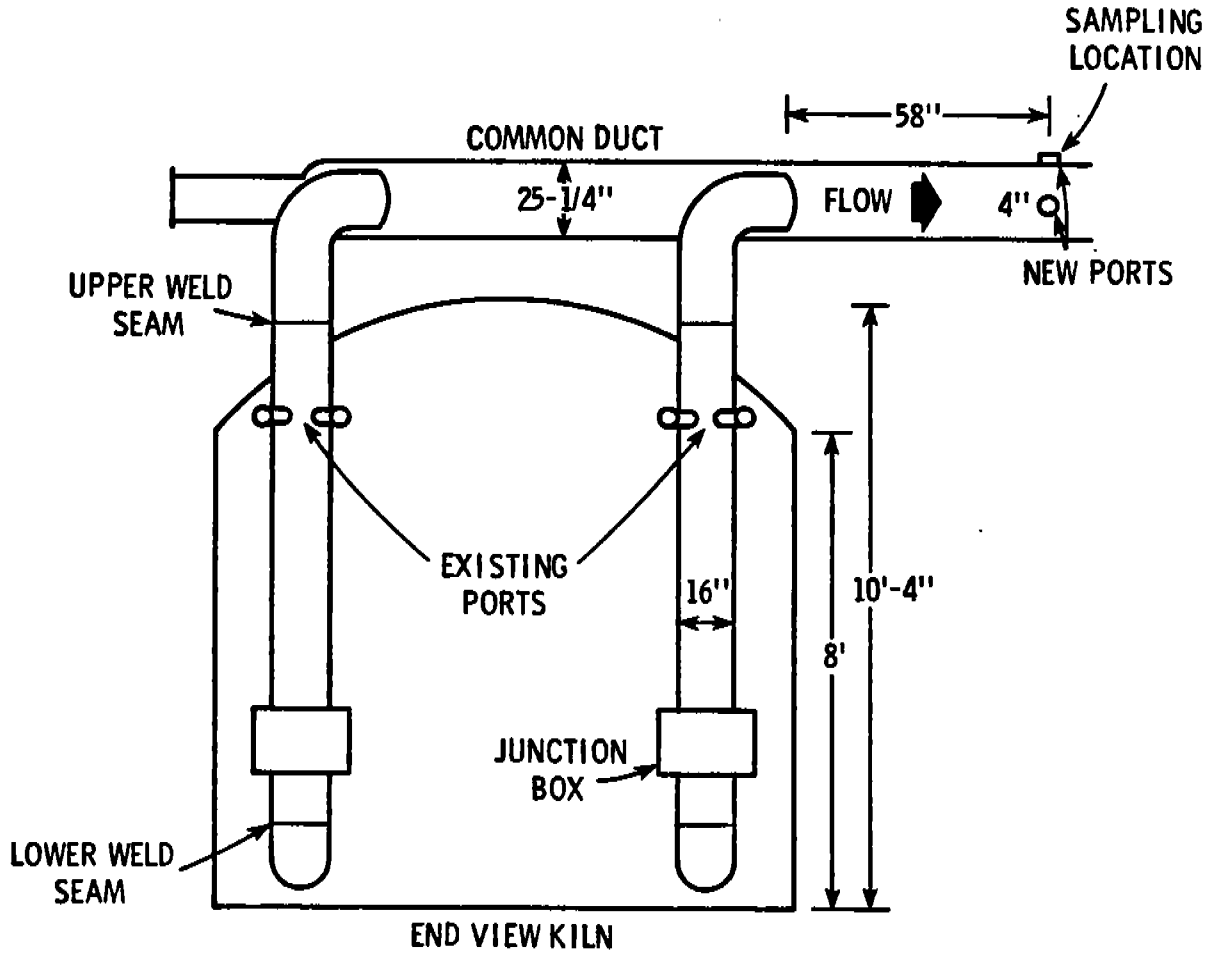

Figure 7. Sampling port location in exhaust duct from charcoal Kiln #8, Kingsford-Charcoal, Burnside, Kentucky.

At this point, the instrument was purged with ambient air for about one hour to clean/evaporate the water/organics out of the flowmeter. From then on, all water and heavier (condensable) organics were condensed out of the sample gas before it reached the heated flexline. Periodically (about every 8 hours) the condenser was removed to allow analysis of the combined condensable and non-condensable organics in the gas stream. This non-conditioned sample gas was analyzed for only a short period (about 1/2 hour) to prevent degradation of the FID and plugging of the instrument flowmeter.

As Figure 8 shows, the zero gas (breathing air) and span gas (9970 ppm methane) were also controlled by another three-way valve, so that sampling or calibration could occur by means of the operation of only one valve.

CARBON MONOXIDE

Carbon monoxide was measured using a Beckman 864 Nondispersive Infrared Analyzer, which automatically and continuously determines the concentration of CO in a flowing mixture. The analysis is based on a differential measurement of the absorption of infrared energy. Figure 9 illustrates the equipment set-up used for continuous CO monitoring of the charcoal burn cycle.

The CO sample gas was drawn through a filter and unheated flexline similar to that described for the THC instrumentation. However, the gas had to be conditioned by passing through impingers, one containing silica gel (to remove moisture) and the other containing ascarite (to remove CO_2, a positive interference in NDIR analysis). The impingers were installed in reverse to prevent solids from being blown into the sample line.

Since the maximum detection limit on the NDIR was 5,000 ppm and concentrations of over 10,000 ppm were expected, a diluter with a 10:1 dilution ratio was used to bring the sample gas within the instrument detection range. Because gas dilution is both pressure and temperature dependent, the sample gas as well as the 2,995 ppm CO calibration gas was brought to ambient temperature and pressure before passing through the diluter. This allowed a constant dilution ratio to be maintained over the five day sampling period, and served two purposes: (1) no pressure or temperature measurements were necessary, and (2) no elaborate calculations were needed to determine the dilution ratio during sampling using temperature and pressure data. The gases were brought to ambient conditions by passing them through a 2L side-arm flask, sending the excess gas to the atmosphere, and pulling the sample (charcoal exhaust or calibration) at the desired flow-rate through the diluter.

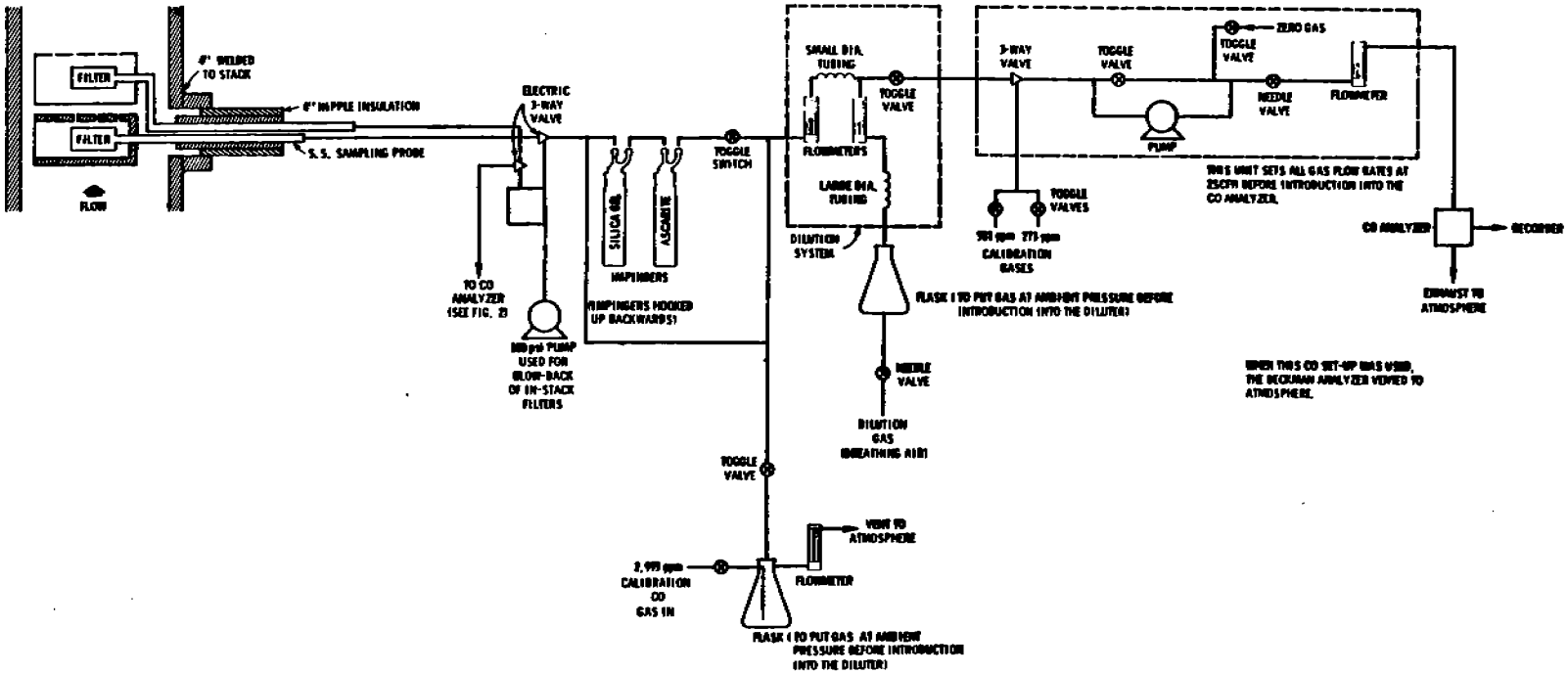

Figure 9. Carbon monoxide analyzer sampling assembly.

The sample gas passes from the diluter through a three-way valve, pump, needle valve, flowmeter, and to the CO analyzer. The last three-way valve was switched to calibrate using 581 ppm or 273 ppm CO gas. These gases were not diluted or conditioned; thus then passed only through the needle valve and flowmeter (to set all gases at the same flowrate) before entering the CO analyzer.

Problems developed soon with the in-stack filter on the CO gas line. The filter plugged several times during the night shift (11 p.m. - 7 a.m.) of May 2-3. When the plugging problem could not be corrected, the filter and sample line were removed and the sample line for moisture analysis was used temporarily for pulling gas for CO measurement. During the day shift (7 a.m. - 3 p.m.) on May 3, the sample extraction set-up was changed to that shown in Figure 10.

Since only a small portion (about 10%) of the gas passing through the THC analyzer is actually burned in the FID and the excess gas is vented to the atmosphere, this excess gas was used for the CO analysis. As shown in Figure 10, the set-up of the THC analyzer is basically identical to that of Figure 8 except (1) only one filter and sample line is used for both instruments, and (2) the excess gas from the THC analyzer is not vented but sent to the diluter and CO analyzer. As before, the gas leaving the THC analyzer passed through the side-arm flask to set the gas at ambient conditions before being pulled through the diluter. From the diluter to the CO analyzer, the set-up is the same as in Figure 9. This entire system shown in Figure 10 was used for the remainder of the sampling period.

INTEGRATED GAS ANALYSIS

Exhaust gas analysis was performed using the method outlined in the Federal Register, Method 3, "Gas Analysis for Carbon Dioxide, Oxygen, Excess Air, and Dry Molecular Weight."

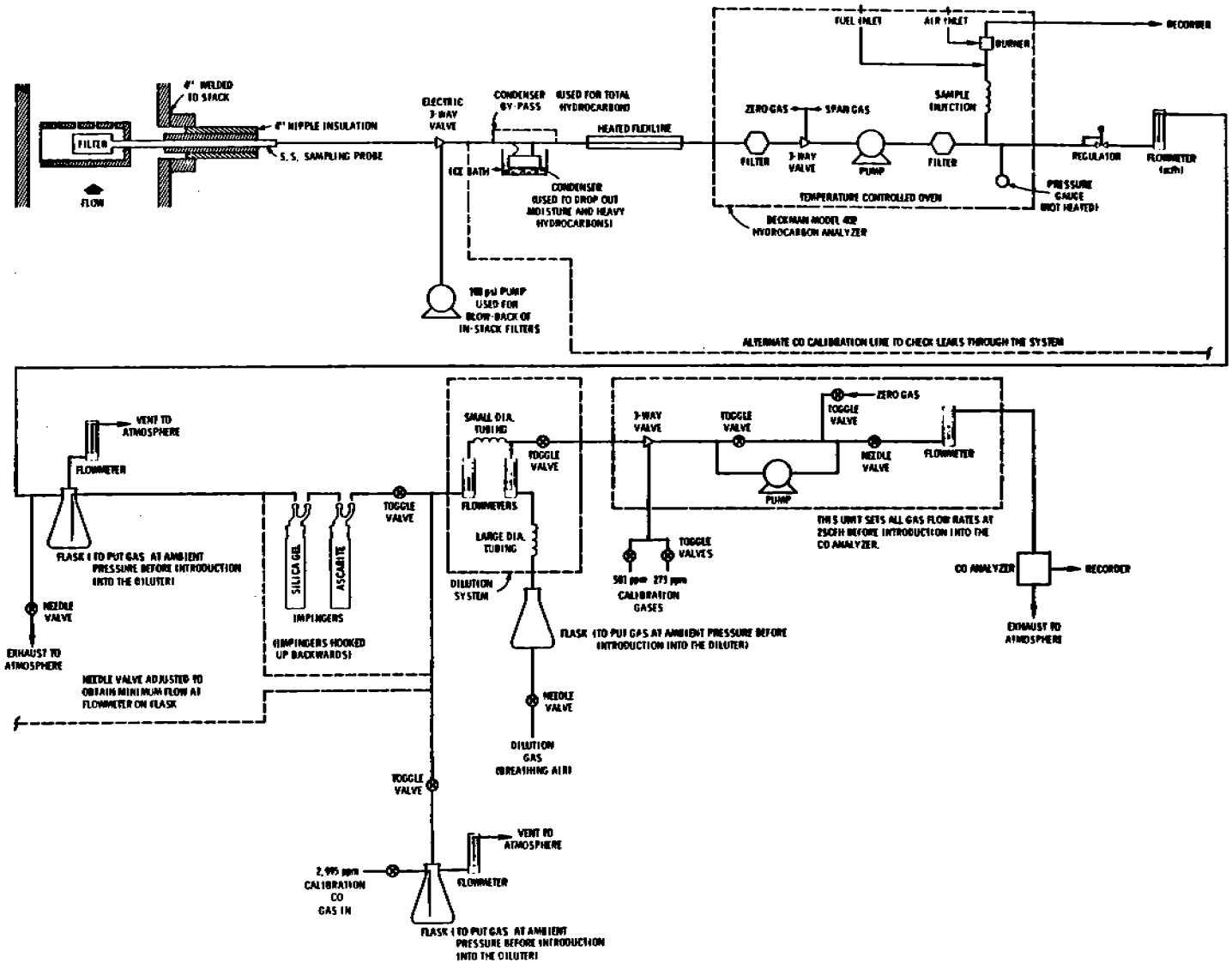

Figure 10. Final continuous monitoring equipment assembly for THC and CO, Kingsford Charcoal, Burnside, Kentucky.

APPENDIX A

COMPLETE EMISSION RESULTS

TRAVERSE POINT LOCATION FOR CIRCULAR DUCTS

PLANT Kingsford Charcoal
DATE 4/24/80
SAMPLING LOCATION Horizontal Exhaust Duct from Kiln #8
INSIDE OF FAR WALL TO
OUTSIDE OF NIPPLE, (DISTANCE A) 28"
INSIDE OF NEAR WALL TO
OUTSIDE OF NIPPLE, (DISTANCE B) 2 3/4"
STACK I.D., (DISTANCE A - DISTANCE B) 25 1/4"
NEAREST UPSTREAM DISTURBANCE 58"
NEAREST DOWNSTREAM DISTURBANCE 28"
CALCULATOR J. R. McKendree

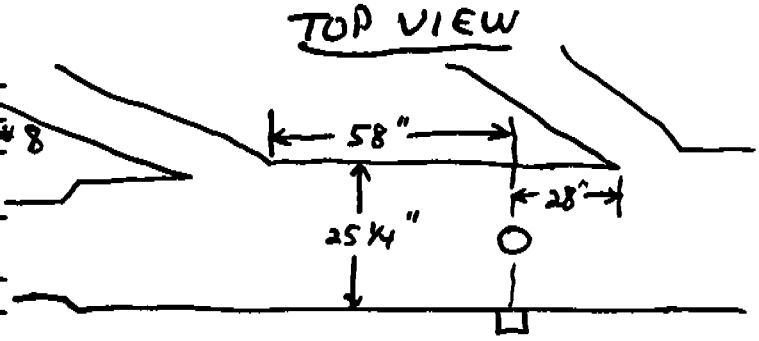

SCHEMATIC OF SAMPLING LOCATION

TRAVERSE POINT NUMBER	FRACTION OF STACK I.D.	STACK I.D.	PRODUCT OF COLUMNS 2 AND 3 (TO NEAREST 1/8 INCH)	DISTANCE B	TRAVERSE POINT LOCATION FROM OUTSIDE OF NIPPLE (SUM OF COLUMNS 4 & 5)
1	0.021	25.250	0.53	2.750	—
2	0.067		1.69		4 1/2
3	0.118		2.98		5 3/4
4	0.177		4.47		7 1/4
5	0.250		6.31		9
6	0.356		8.99		11 3/4
7	0.644		16.26		19
8	0.750		18.94		21 5/8
9	0.823		20.78		23 1/2
10	0.882		22.27		25
11	0.933		23.56		26 1/4
12	0.979		24.72		—

EPA (Dur) 232
4/72

EPA METHOD 2
VELOCITY TRAVERSE DATA

PLANT Kingsford Charcoal
LOCATION Exhaust From Kiln No 8
DATE 4/24/80 RUN NO. 1
STACK INNER DIAMETER, ~~m~~ (in.) 25 1/4
BAROMETRIC PRESSURE, ~~mm Hg~~ (in. Hg) 28.74
CROSS SECTIONAL AREA, m^2 (ft^2)
OPERATORS McKendree / Perry
PITOT TUBE I.D. NO. 3-2
AVG. COEFFICIENT, Cp = 0.79
LAST DATE CALIBRATED 1/25/79

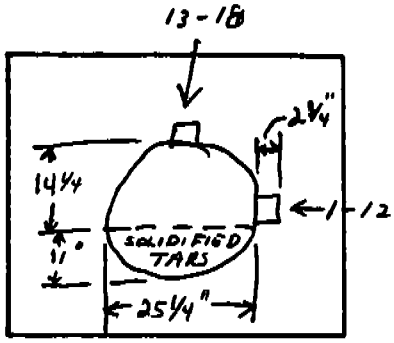

SCHEMATIC OF STACK CROSS SECTION

TRAVERSE PT. No.	VEL. Hd. Δp mm (in.) H_2O	STACK TEMPERATURE t_s °C (°F)	T_s, °K (°R)	P_g mm Hg (in. Hg)	$\sqrt{\Delta p}$
1	—	—	—	—	—
2	0.02	159			
3	0.02	161			
4	0.02	163			
5	0.02	163			
6	0.015	163			
7	0.015	163			
8	0.012	163			
9	0.012	164			
10	0.010	164			
11	0.015	164			
12	—	—	—	—	—
13	—	—	—	—	—
14	0.015	163			
15	0.015	164			
16	0.012	164			
17	0.014	163			
18	0.015	164			
	avg = 0.015	avg 163°F			
		AVERAGE			

PRELIMINARY VELOCITY TRAVERSE

PLANT Kingsford
DATE
LOCATION
STACK I.D.
BAROMETRIC PRESSURE, in. Hg 28.99
STACK GAUGE PRESSURE, in. H_2O
OPERATORS

Time velocity

TRAVERSE POINT NUMBER	VELOCITY HEAD (Δp_s), in. H_2O	STACK TEMPERATURE (T_s), °F
5/2/80 1:15 Pm	.01	60
1:30 Pm	.02	60
1:45 Pm	.02	60
2:00 Pm	.065	~~76°C~~ 60
2:15 Pm	.06	~~82°C~~ 60
2:30 Pm	.065	60°F
2:45 Pm	.075	60°F
3:00 Pm	.065	58°F
3:15 Pm	.065	59°F
1530	.062	60°F
1545	.067	59°F
1600	.060	60°F
1615	.015	60°F
1630	.010	60°F
1645	.010	59°F
1700	.005	59°F
1715	.005	59°F
1730	.005	60°F
1745	.005	61°F
1800	.005	63°F
1815	.005	69°F
1830	.005	88°F
1845	.010	95°F
1900	.020	111°F
AVERAGE		

SCHEMATIC OF TRAVERSE POINT LAYOUT

Time

TRAVERSE POINT NUMBER	VELOCITY HEAD (Δp_s), in. H_2O	STACK TEMPERATURE (T_s), °F
5-2-80 1915	.021	118°F
1930	.025	121°F
1945	.030	125°F
2000	.030	136°F
2015	.030	136°F
2030	.030	136°F
2045	.033	141°F
2100	.033	143°F
2115	.035	144°F
2130	.035	146°F
2145	.035	147°F
2200	.035	148°F
2215	.035	149°F
2230	.035	150°F
2245	.035	151°F
2300	.038	152°F
2315	.039	153°F
2330	.040	154
2345	.040	154
2400	.039	155
0015	.040	155
0030	.040	156
0045	.040	156
0100	.040	157
AVERAGE		

EPA (Dur) 233
4/72

PRELIMINARY VELOCITY TRAVERSE

PLANT Kingsford
DATE May 3, 1980
LOCATION Kiln # 8
STACK I.D.
BAROMETRIC PRESSURE, in. Hg 28.99
STACK GAUGE PRESSURE, in. H_2O
OPERATORS CL, MP

re-adjusted micro-manometer reading was .006 low — when re-zeroed this reading became 0.046

24 HR Clock Time

~~TRAVERSE POINT NUMBER~~	VELOCITY HEAD (Δp_s), in. H_2O	STACK TEMPERATURE (T_s), °F
0115	0.040	158
0130	0.042	158
0145	0.041	158
0200	0.050	158
0215	0.050	159
0230	0.051	159
0245	0.050	160
0300	0.050	160
0315	0.049	160
0330	0.050	160
0345	0.049	160
0400	0.048	160
0415	0.048	160
0430	0.049	159
0445	0.049	159
0500	0.049	159
0515	0.049	159
0530	0.049	159
0545	0.049	159
0600	0.048	159
0615	0.049	158
0630	0.049	158
0645	0.049	159
0700	0.050	158
AVERAGE		

5/3/80

re-zeroed manometer

28.99 Hg

SCHEMATIC OF TRAVERSE POINT LAYOUT

TRAVERSE POINT NUMBER	VELOCITY HEAD (Δp_s), in. H_2O	STACK TEMPERATURE (T_s), °F
0715	.043	160
0730	.044	160
0745	.046	161
0800	.046	160
0815	.046	161
0830	.046	160
0845	.046	161
0900	.046	160
0915	.045	160
0930	.046	160
0945	.046	160
1000	.046	160
1015	.046	160
1030	.047	160
1045	.046	159
1100	.045	159
1115	.042	161
1130	.046	161
1145	.045	161
1200	.046	161
1215	.049	162
1230	.048	163
1245	.043	162
1300	.042	161
AVERAGE		

EPA (Dur) 233
4/72

PRELIMINARY VELOCITY TRAVERSE

PLANT Kingsford
DATE May 3
LOCATION Burnside Ky.
STACK I.D. Kiln #8
BAROMETRIC PRESSURE, in. Hg 28.99
STACK GAUGE PRESSURE, in. H_2O
OPERATORS JC TT.

Time

TRAVERSE POINT NUMBER	VELOCITY HEAD (Δp_s), in. H_2O	STACK TEMPERATURE (T_s), °F
1315	.041	161
1330	.040	162
1345	.04	161
1400	.04	161
1415	.04	161
1430	.04	161
1445	.04	161
1500	.033	160°F
1515	.033	160°F
1530	.035	160°F
1545	.036	159°F
1600	.035	160°F
1615	.035	160°F
1630	.033	159°F
1645	.035	160°F
1700	.034	160°F
1715	.031	159°F
1730	.035	160°F
1745	.033	160°F
1800	.031	159°F
1815	.030	161°F
1830	.032	160°F
1845	.030	160°F
1900	.030	161°F
AVERAGE		

SCHEMATIC OF TRAVERSE POINT LAYOUT

TRAVERSE POINT NUMBER	VELOCITY HEAD (Δp_s), in. H_2O	STACK TEMPERATURE (T_s), °F
1915	.031	161°F
1930	.034	163°F
1945	.034	162°F
2000	.035	164°F
2015	.031	163°F
2030	.035	164°F
2045	.030	166°F
2100	.030	165°F
2115	.032	166°F
2130	.032	168°F
2145	.032	170°F
2200	.032	170°F
2215	.032	168°F
2230	.032	166°F
2245	.030	168°F
2300	.030	168°F
2315	.030	166
2330	.030	164
2345	.030	168
2400	.024	172
AVERAGE		
2015	.029	175

EPA (Dur) 233
4/72

EPA METHOD 2
VELOCITY TRAVERSE DATA

PLANT Kingsford
LOCATION Kiln 8
DATE 05-04-80 RUN NO.
STACK INNER DIAMETER, m (in.)
BAROMETRIC PRESSURE, ~~mm Hg~~ (in. Hg) 28.95
CROSS SECTIONAL AREA, m^2 (ft^2)
OPERATORS
PITOT TUBE I.D. NO.
AVG. COEFFICIENT, Cp =
LAST DATE CALIBRATED

SCHEMATIC OF STACK CROSS SECTION

24 hr clock	~~TRAVERSE PT. NO.~~ Time	VEL. Hd. Δp mm (in.) H_2O	STACK TEMPERATURE t_s °C (°F)	~~K (°R)~~ TIME	Vel. Hd. ~~mm Hg (in. Hg)~~ ΔP	(°F) ~~°C~~ Ts
	0030	.030	176	0645	0.042	201
	0045	.031	181	0700	0.040	190
	0100	.031	184	0715	0.030	188
	0115	.030	183	0730	0.030	193
	0130	.030	181	0745	.030	206
	0145	.031	180	0800	.030	205
	0200	.031	179	0815	.030	206
	0215	.031	179	0830	.030	206
pitot back.	0230	.037	179	0845	.031	207
	0245	0.035	179	0900	.031	209
flushed	0300	0.037	174	0915	.032	210
with	0315	0.039	181	0930	.030	210
acetone	0330	0.040	185	0945	.033	208
	0345	0.040	187	1000	.032	213
	0400	0.040	193	1015	.030	213
checked	0415	0.041	189	1030	.030	215
2000	0430	0.041	190	1045	.032	216
	0445	0.041	190	1100	.032	217
	0500	0.040	187	1115	.036	220
	0515	0.040	199	1130	.040	222
	0530	0.041	200	1145	.045	224
	0545	0.041	198	1200	.045	225
	0600	0.044	197	1215	.045	225
	0615	0.043	201	1230	.045	225
	0630	0.042	203	1245	.046	227
			AVERAGE			

1/80

EPA METHOD 2
VELOCITY TRAVERSE DATA

PLANT Kingsford Charcoal
LOCATION Burnside Ky.
DATE May 4 1980 RUN NO.
STACK INNER DIAMETER, m (in.)
BAROMETRIC PRESSURE, mm Hg (in. Hg) 29.05
CROSS SECTIONAL AREA, $m^2(ft^2)$
OPERATORS BK. TT WM. CC. MP CD.
PITOT TUBE I.D. NO.
AVG. COEFFICIENT, Cp =
LAST DATE CALIBRATED

SCHEMATIC OF STACK CROSS SECTION

TIME ~~TRAVERSE PT. NO.~~	VEL. Hd. Δp mm (in.) H_2O	STACK TEMPERATURE t_s (°F)	~~t (°R)~~ TIME	VEL Hd mm Hg (in. Hg) Δp	Temp ~~Δp~~ TIME
1300	.044	221	1915	.034	227
1315	.040	226	1930	.020	215
1330	.040	228	1945	.016	209
1345	.038	227	2000	.017	204
1400	.035	225	2015	.016	201
1415	.035	225	2030	.015	202
1430	.036	228	2045	.015	202
1445	.036	228	2100	.015	202
1500	.030	223	2115	.014	199
1515	.029	216°F	2130	.014	201
1530	.026	213°F	2145	.011	201
1545	.026	208°F	2200	.010	200
1600	.025	209°F	2215	.010	198
1615	.025	210°F	2230	.012	200
1630	.025	207°F	2245	.015	198
1645	.025	206°F	2300	.015	194
1700	.025	204°F	2315	.015	180
1715	.025	200°F	2330	.015	172
1730	.025	204°F	2345	.015	170
1745	.021	198°F	2400	.015	192
1800	.021	199°F	0015	.015	195
1815	.029	203°F	0030	.015	187
1830	.025	211°F	0045	.014	200
1845	.031	217	0100	.015	198
1900	.031	222	0115	.016	199
		AVERAGE			

2nd shift McDonald Clark

cleaned pitot lines, re zeroed manometer

EPA METHOD 2
VELOCITY TRAVERSE DATA

PLANT Kingsford Charcoal
LOCATION Kiln #8 exhaust duct
DATE May 5, 1980 RUN NO.
STACK INNER DIAMETER, m (in.)
BAROMETRIC PRESSURE, mm Hg (in. Hg) 28.90
CROSS SECTIONAL AREA, m^2 (ft^2)
OPERATORS BK, TT, WM, C.C., M.P., C.O.
PITOT TUBE I.D. NO.
AVG. COEFFICIENT, Cp = 0.991
LAST DATE CALIBRATED

SCHEMATIC OF STACK CROSS SECTION

TIME ~~TRAVERSE PT. NO.~~	VEL. Hd. Δp ~~mm Hg~~ (in.) H_2O	STACK TEMPERATURE t_s (°F)	~~T_s (°K) (°R)~~ Time	Vel. Hd. ~~mm Hg (in. Hg)~~ in. H_2O	Temp
0130	.015	199	0745	.040	248
0145	0.015	190	0800	.035	253
0200	0.015	202	0815	.030	253
0215	0.020	205	0830	.030	253
0230	0.020	210	0845	.027	252
0245	0.019	210	0900	.027	252
0300	0.015	210	0915	.025	253
0315	0.016	211	0930	.026	256
0330	0.022	207	0945	.030	261
0345	0.022	209	1000	.030	264
0400	0.021	211	1015	.027	263
0415	0.021	210	1030	.025	265
0430	0.022	207	1045	.025	269
0445	0.022	215	~~1045~~ 1100	.030	273
0500	0.021	209	1115	.035	277
0515	0.022	207	1130	.034	276
0530	0.022	215	1145	.035	276
0545	0.023	218	1200	.035	280
0600	0.023	217	1215	.035	280
0615	0.032	231	1230	.035	281
0630	0.031	232	1245	.035	281
0645	0.035	235	1300	.035	282
0700	0.035	241	1315	.035	287
0715	0.040	248	1330	.037	288
0730	.040	248	1345	.04	288
		AVERAGE			

EPA METHOD 2
VELOCITY TRAVERSE DATA

PLANT Kingsford
LOCATION
DATE RUN NO.
STACK INNER DIAMETER, m (in.)
BAROMETRIC PRESSURE, mm Hg (in. Hg) 28.80
CROSS SECTIONAL AREA, m^2 (ft^2)
OPERATORS
PITOT TUBE I.D. NO.
AVG. COEFFICIENT, Cp =
LAST DATE CALIBRATED

SCHEMATIC OF STACK CROSS SECTION

5/5/8

Time ~~TRAVERSE PT. No.~~	VEL. Hd. Δp ~~mm~~ (in.) H_2O	STACK TEMPERATURE t_s (°F)	STACK TEMPERATURE ~~T_s °K (°R)~~ Time	P_g mm Hg (in. Hg) ~~Δp~~ Δp	$\sqrt{\Delta p}$ Temp.
1400	.038	290	2015	.034	312
1415	.036	290	2030	.035	316
1430	.037	291	2045	.035	318
1445	.038	291	2100	.040	319
1500	.035	292	2115	.040	321
1515	.035	291	2130	.037	321
1530	.036	294	2145	.040	323
1545	.036	295	2200	.040	326
1600	.036	296	2215	.039	328
1615	.036	297	2230	.040	328
1630	.036	298	2245	.041	329
1645	.036	300	2300	.040	328
1700	.030	295	2315	.040	329
1715	.035	296	2330	.041	330
1730	.031	295	2345	.045	352
1745	.031	297	2400	.041	369
1800	.033	298	0015	.040	416
1815	.030	300	0030	.039	416
1830	.033	303	0045	.039	419
1845	.036	302	0100	.038	426
1900	.034	302	0115	.036	426
1915	.032	304	0130	.036	423
1930	.034	306	0145	.040	445
1945	.034	308	0200	.040	428
2000	.035	309	0215	.041	428
		AVERAGE			

05-06-80

EPA METHOD 2
VELOCITY TRAVERSE DATA

PLANT Kingsford
LOCATION
DATE RUN NO.
STACK INNER DIAMETER, m (in.)
BAROMETRIC PRESSURE, mm Hg (in. Hg)
CROSS SECTIONAL AREA, m^2 (ft^2)
OPERATORS
PITOT TUBE I.D. NO.
AVG. COEFFICIENT, Cp =
LAST DATE CALIBRATED

SCHEMATIC OF STACK CROSS SECTION

~~TRAVERSE~~ Time PT. No.	VEL. Hd. Δp mm (in.) H_2O	STACK TEMPERATURE t_s °C (°F)	STACK TEMPERATURE T_s, °K (°R)	P_g mm Hg (in. Hg)	$\sqrt{\Delta p}$
0-5-06-80 0230	.037	430	0845	.023	416
0245	.041	440	0900	.025	423
0300	.040	439	0915	.02	423
0315	.038	447	0930	.025	427
0330	.039	468	0945	.025	417
0345	.039	458	1000	.020	405
0400	.032	448	1015	.015	395
0415	.034	450	1030	.017	384
0430	changing flex-line		1045	.014	380
0445	over - no time		1100	.014	375
0500	for readings		1115	.015	366
0515	.040	480	1130	.01	363
0530	.042	481	1145	.01	360
0545	.042	489	1200	.01	359
0600	.044	490	1215	.015	362
0615	.045	488	1230	.020	377
0630	.041	456	1245	.013	377
0645	.042	447	1300	.017	~~380~~
0700	.039	439	1315	.012	376
0715	.035	430	1330	.012	369
0730	.031	424	1345	.010	368
0745	.028	416	1400	.006	335
0800	.025	[illegible]	1415	.006	317
0815	.023	412	1430	.007	315
0830	.023	416	1445	.006	303
~~0845~~		AVERAGE	~~1300~~		

ucked
nomenclature
no
ker

EPA METHOD 2
VELOCITY TRAVERSE DATA

PLANT Kingsford
LOCATION
DATE RUN NO.
STACK INNER DIAMETER, m (in.)
BAROMETRIC PRESSURE, mm Hg (in. Hg)
CROSS SECTIONAL AREA, m^2 (ft^2)
OPERATORS
PITOT TUBE I.D. NO.
AVG. COEFFICIENT, Cp =
LAST DATE CALIBRATED

SCHEMATIC OF STACK CROSS SECTION

5/6/80

TRAVERSE PT. No.	VEL. Hd. Δp mm (in.) H_2O	STACK TEMPERATURE t_s °C (°F)	STACK TEMPERATURE T_s, °K (°R)	P_g mm Hg (in. Hg)	$\sqrt{\Delta p}$
1500	.010	322			
1515	~~.004~~ .005	346			
1530	.004	344			
1545	.005	343			
1600	.005	344			
1615	.002	333			
1630	.001	312			
1645	0	200			
		AVERAGE			

DRY MOLECULAR WEIGHT DETERMINATION

PLANT Kingsford Charcoal Burnside Kentucky
DATE 5-3-80
SAMPLING TIME (24-hr CLOCK) 2005
SAMPLING LOCATION Top of Port
SAMPLE TYPE (BAG, INTEGRATED, CONTINUOUS) Continuous
ANALYTICAL METHOD Fyrite
AMBIENT TEMPERATURE 72°
OPERATOR W. McDonald

COMMENTS:

RUN / GAS	1		2		3		AVERAGE NET VOLUME	MULTIPLIER	MOLECULAR WEIGHT OF STACK GAS (DRY BASIS) M_d, lb/lb-mole
	ACTUAL READING	NET	ACTUAL READING	NET	ACTUAL READING	NET			
CO_2	10.0	10.0	10.0	10.0	10.0	10.0	10.0	44/100	4.4
O_2 (NET IS ACTUAL O_2 READING MINUS ACTUAL CO_2 READING)	15.0	5.0	15.2	5.2	15.0	5.0	5.1	32/100	1.63
CO (NET IS ACTUAL CO READING MINUS ACTUAL O_2 READING)							84.9	28/100	
N_2 (NET IS 100 MINUS ACTUAL CO READING)								28/100	23.77
								TOTAL	29.80

A-12

EPA (Dur) 230
4/72

DRY MOLECULAR WEIGHT DETERMINATION

PLANT Kingsford Charcoal
DATE 5-3-80
SAMPLING TIME (24-hr CLOCK) 2210
SAMPLING LOCATION Top of Port
SAMPLE TYPE (BAG, INTEGRATED, CONTINUOUS) Continuous
ANALYTICAL METHOD Fyrite
AMBIENT TEMPERATURE 60
OPERATOR W. McDonald

COMMENTS:

RUN / GAS	1		2		3		AVERAGE NET VOLUME	MULTIPLIER	MOLECULAR WEIGHT OF STACK GAS (DRY BASIS) M_d, lb/lb-mole
	ACTUAL READING	NET	ACTUAL READING	NET	ACTUAL READING	NET			
CO_2	9.6	9.6	9.5	9.5	9.5	9.5	9.55	44/100	4.20
O_2 (NET IS ACTUAL O_2 READING MINUS ACTUAL CO_2 READING)	15.6	6.0	15.5	6.0	15.5	6.0	6.0	32/100	1.92
CO (NET IS ACTUAL CO READING MINUS ACTUAL O_2 READING)							3.5	28/100	0.98
N_2 (NET IS 100 MINUS ACTUAL CO READING)							81.0	28/100	22.68 ~~23.66~~
								TOTAL	29.78 ~~29.78~~

EPA (Dur) 230
4/72

DRY MOLECULAR WEIGHT DETERMINATION

PLANT Kingsford Charcoal
DATE 5-4-80
SAMPLING TIME (24-hr CLOCK) 1700
SAMPLING LOCATION Top of outlet Port
SAMPLE TYPE (BAG, INTEGRATED, CONTINUOUS) Continuous
ANALYTICAL METHOD Fyrite
AMBIENT TEMPERATURE 85
OPERATOR W. McDonald

COMMENTS:

GAS \ RUN	1		2		3		AVERAGE NET VOLUME	MULTIPLIER	MOLECULAR WEIGHT OF STACK GAS (DRY BASIS) M_d, lb/lb-mole
	ACTUAL READING	NET	ACTUAL READING	NET	ACTUAL READING	NET			
CO_2	11.5	11.5	11.0	11.0	11.0	11.0	11.0	44/100	4.84
O_2 (NET IS ACTUAL O_2 READING MINUS ACTUAL CO_2 READING)	14.5	3.0	14.4	3.4	14.5	3.5	3.25	32/100	1.04
CO (NET IS ACTUAL CO READING MINUS ACTUAL O_2 READING)							85.75	28/100	
N_2 (NET IS 100 MINUS ACTUAL CO READING)								28/100	24.01
								TOTAL	29.89

EPA (Dur) 230
4/72

DRY MOLECULAR WEIGHT DETERMINATION

PLANT Kingsford Charcoal
DATE 5-5-80
SAMPLING TIME (24-hr CLOCK) 1800 HRS
SAMPLING LOCATION outlet Top of Pert
SAMPLE TYPE (BAG, INTEGRATED, CONTINUOUS) Continuous
ANALYTICAL METHOD Fyrite
AMBIENT TEMPERATURE 92°
OPERATOR W. H. McDonald

COMMENTS:

GAS \ RUN	1		2		3		AVERAGE NET VOLUME	MULTIPLIER	MOLECULAR WEIGHT OF STACK GAS (DRY BASIS) M_d, lb/lb-mole
	ACTUAL READING	NET	ACTUAL READING	NET	ACTUAL READING	NET			
CO_2	16.5		16.0		16.5		16.2	44/100	7.13
O_2 (NET IS ACTUAL O_2 READING MINUS ACTUAL CO_2 READING)	9.5		9.2		9.5		9.3	32/100	2.98
CO (NET IS ACTUAL CO READING MINUS ACTUAL O_2 READING)							74.5	28/100	
N_2 (NET IS 100 MINUS ACTUAL CO READING)								28/100	20.86
								TOTAL	30.97

EPA (Dur) 230
4/72

A-15

Date: 5-3-80 Sat. Run # 1 Barometric 28.95

Meter Box # 2 Plant = Kingsford
Method # 6 Console

Operator — C. Clark & W. McDonald

After Leak Rate .001 Rate 2 SCFH

Before Leak Rate .000 SCFH Rate = 2 SCFH

Flow Rate 2.0 SCFH

Final Dry gas meter Reading 249.700
Initial " " " " 245.864
Total volume Sampled 3.837 SCFH

Meter Temp. Before of 78°F = Avg. Temp. 78.5°F

Meter Temp After of 79°F

Time Start 1808
Time Stop 1908 → Run Time 1hr.

Impingers

#	H2O		H2O	
1	126.5	After wt. grams		
	93.0	Initial wt. grams		
	33.5	volume grams collected		

#	H2O		# 3 =	Mt.
2	100.4	After wt grams	84.2	After wt. g
	87.0	Initial wt. grams	83.8	Initial wt. g
	13.4	volume grams collected	.04	gai
				volume collected

#4 124.1 After wt. grams

Silica gel

123.4 Initial wt. grams

0.7 volume grams Collected

Total gained = 47.64

Revision
10/79

MOISTURE IN STACK GAS DETERMINATION

METHOD 4

Plant Kingsford Charcoal Date 5-3-80

Run # 1 Location Sampled Top of outlet

Volume of gas at meter conditions (CF) = VM = 3.837

Average meter temperature (°F) = TM = 78.5

Barometric pressure absolute (in Hg) = PB = 28.95

VMS = Volume of gas sampled at standard conditions (SCF)

$$VMS = \frac{(17.64)(VM)(PB)}{(TM + 460)} = \frac{17.64\ (3.837)(28.95)}{\underset{538.5}{(78.5 + 460)}} = 3.6388$$

Volume of water final 47.3 Wt. of silica gel final 124.1

Volume of water initial 0 Wt. of silica gel initial 123.4

Volume collected V_1 = 47.3 Wt. of water V_2 = 0.7 gm

Total volume of water collected (ml) = $V_1 + V_2$ = VL = 48.0

Volume of water vapor at standard conditions (CF) = VW

VW = (.0471)(VL) = .0471 (48.0) = 2.2752

Mole fraction of water vapor = M

$$M = \frac{VW}{VMS + VW} = \frac{(2.2752)}{\underset{5.91396}{(3.6388) + (2.2752)}} = M = 0.38472$$

Percent moisture = (100)(M) = 100 (.38472) = %M 38.5

1st impinger = 126.5
93.0
Total 33.5 grams

2nd 100.4
87.0
13.4 gms

3rd. 84.2
83.8
0.4 gms

Silica Gel 124.1
123.4
0.7 gms

MOISTURE IN STACK GAS DETERMINATION

METHOD 4

Plant Kingsford Date 5-3-80

Run # 11 Location Sampled Kiln 8 Outlet Top Port

Dry gas meter calibration factor = Y = 0.991

Volume of gas at meter conditions (cf) = V_m = 4.705

Average meter temperature (°F + 460)°R = T_m = ~~77.5~~ 537.5

Barometric pressure absolute (in. Hg) = P_{bar} = 28.80

$V_{m(std)}$ = Volume of gas sampled at standard conditions (dscf)

$$V_{m(std)} = \frac{Y(17.64)(V_m)(P_{bar} + \frac{\Delta H}{13.6})}{(T_m)} = \frac{17.64\ (4.705)(28.8)}{(537.5)}(0.991) = 4.407$$

Volume of water final _____ ml Wt. of silica gel final _____ g

Volume of water initial _____ ml Wt. of silica gel initial _____ g

Volume collected V_1 = _____ ml Wt. of water V_2 = _____ g

Total volume of water collected (ml) = $V_1 + V_2 = V_{1c}$ = 44.5

Volume of water vapor at standard conditions (scf) = $V_{wc(std)}$

$V_{wc(std)}$ = (.04707)(Vlc) = .04707(44.5) = 2.094615

Mole fraction of water vapor = B_{ws}

$$B_{ws} = \frac{V_{wc(std)}}{V_{m(std)} + V_{wc(std)}} = \frac{(2.09)}{(4.407) + (2.09)} = B_{ws} = 0.3222$$

2.501615

Percent moisture = (100)(B_{ws}) = 100 (.322) = 32.2 %

	(g) Imp. wt	(Ft³) Meter Vol.	(°F) T_m	24 hr. clock Time	scfm R/m	
Final	353.2	284.764	81	0218		
initial	308.70 308.7	280.059	74	0010	~3.0	
net or over	44.5	4.705	77.5			

1/80

Revision
10/79

MOISTURE IN STACK GAS DETERMINATION

METHOD 4

Plant Kingsford Charcoal Date 5-3-80

Run # 2 Location Sampled outlet Top Port

249,710 - 251.653

Volume of gas at meter conditions (CF) = VM = 1.943

71°F 72°F

Average meter temperature (°F) = TM = 71.5

Barometric pressure absolute (in Hg) = PB = 28.96

VMS = Volume of gas sampled at standard conditions (SCF)

$$VMS = \frac{(17.64)(VM)(PB)}{(TM + 460)} = \frac{17.64\ (1.943)(28.96)}{(71.5 + 460)} = 1.86753$$

531.5

Volume of water final 24.1 Wt. of silica gel final 124.4

Volume of water initial 0 Wt. of silica gel initial 123.2

Volume collected V_1 = 24.1 Wt. of water V_2 = 1.2 gm

Total volume of water collected (ml) = $V_1 + V_2$ = VL = 25.3

Volume of water vapor at standard conditions (CF) = VW

VW = (.0471)(VL) = .0471 (25.3) = 1.1916

Mole fraction of water vapor = M

$$M = \frac{VW}{VMS + VW} = \frac{(1.1916)}{(1.86753) + (1.1916)} = M = 0.3895$$

Percent moisture = (100)(M) = 100 (.3895) = %M 38.95

Leak Rate = Initial = .001 AT 2.0 SCFH

Leak Rate = Final = .001 AT 2.0 SCFH

START Time 1951

Finished 2021

	Final	Initial
1 ST impinger	100.8	85.6
2ND	[illegible]	

Revision
10/79

MOISTURE IN STACK GAS DETERMINATION

METHOD 4

0230 HRS

Plant Kingsford Charcoal Date 5-4-80

Run # 3 Location Sampled Top of Port

Volume of gas at meter conditions (CF) = VM = 3.767

Average meter temperature (°F) = TM = 57

Barometric pressure absolute (in Hg) = PB = 28.95

VMS = Volume of gas sampled at standard conditions (SCF)

$$VMS = \frac{(17.64)(VM)(PB)}{(TM + 460)} = \frac{17.64\ (3.767)(28.95)}{(57 + 460)} = 3.721$$

Volume of water final — Wt. of silica gel final —

Volume of water initial — Wt. of silica gel initial —

Volume collected V_1 = — Wt. of water V_2 = 57 gm

Total volume of water collected (ml) = $V_1 + V_2$ = VL = 57

Volume of water vapor at standard conditions (CF) = VW

VW = (.0471)(VL) = .0471 (57) = 2.685

Mole fraction of water vapor = M

Note: → sample line back flushed with acetone + insulation added up top to prevent condensation

$$M = \frac{VW}{VMS + VW} = \frac{(2.685)}{(3.721) + (2.685)} = M = 0.419$$

Percent moisture = (100)(M) = 100 (0.419) = %M 41.9

Final 468.6
ITINIAL: 411.6
57.0

~~1st impinger 85.6 gms~~
~~2nd impinger 95.6 gms~~
~~3rd impinger 84.3 gms~~
~~Sil Gel impinger 123.4 gms~~

FINAL 62°F temp 52°F DGM 251.655 255.422

Time 0232 0372

A-20

~~Both pieces of Rubber Tubing on Silica Gel imp~~
~~Rest of impinger leave Tubing off when weighing~~

Revision
10/79

MOISTURE IN STACK GAS DETERMINATION

METHOD 4 TIME 0415 HRS

Plant KINGSFORD CHARCOAL Date MAY 4, 1980

Run # 4 Location Sampled TOP OF OUTLET OF #8 KILN

Volume of gas at meter conditions (CF) = VM = ~~255.422~~ 3.936

Average meter temperature (°F) = TM = 64

Barometric pressure absolute (in Hg) = PB = 28.95

VMS = Volume of gas sampled at standard conditions (SCF)

$$VMS = \frac{(17.64)(VM)(PB)}{(TM + 460)} = \frac{17.64\ (3.936)(28.95)}{(64 + 460)} = 3.836$$

524

Volume of water final — Wt. of silica gel final —

Volume of water initial — Wt. of silica gel initial —

Volume collected V_1 = — Wt. of water V_2 = 57.6 gm

Total volume of water collected (ml) = $V_1 + V_2$ = VL = 57.6

Volume of water vapor at standard conditions (CF) = VW

VW = (.0471)(VL) = .0471 (57.6) = 2.713

Mole fraction of water vapor = M

$$M = \frac{VW}{VMS + VW} = \frac{(2.713)}{(3.836) + (2.713)} = M = .414$$

Percent moisture = (100)(M) = 100 ( ) = %M 41.4

	Imp Weight (mg)	Volume (ml)	Temp °F	Time (24 HR)	(SCFM) R/M
FINAL	358.9	259.354	66	0519	3.5
Initial	301.3	255.422	62	0419	3.5
	57.6				

Revision
10/79

MOISTURE IN STACK GAS DETERMINATION

METHOD 4

Time 0555 Hrs.

Plant Kingsford Charcoal Date May 4, 1980

Run # 5 Location Sampled Top of Outlet

Volume of gas at meter conditions (CF) = VM = 4.717

Average meter temperature (°F) = TM = 66.5

Barometric pressure absolute (in Hg) = PB = 28.95

VMS = Volume of gas sampled at standard conditions (SCF)

$$VMS = \frac{(17.64)(VM)(PB)}{(TM + 460)} = \frac{17.64\ (4.717)(28.95)}{(66.5 + 460)} = 4.575$$

526.5

Volume of water final _____ Wt. of silica gel final _____

Volume of water initial _____ Wt. of silica gel initial _____

Volume collected V_1 = _____ Wt. of water V_2 = _____ gm

Total volume of water collected (ml) = $V_1 + V_2$ = VL = 74.15

Volume of water vapor at standard conditions (CF) = VW

VW = (.0471)(VL) = .0471 (74.15) = 3.492

Mole fraction of water vapor = M

Time: 0555
+ 0711

$$M = \frac{VW}{VMS + VW} = \frac{(3.492)}{(4.575) + (3.492)} = M = .4329$$

8.067

Percent moisture = (100)(M) = 100 (.4329) = %M 43.29

	(Mg) Imp. Weight	(Ft3) Meter Volume	(°F) Tm	(24 Hr) Clock	(SCFH) R/M
Final	374.15	264.075	68	0711	
Initial	300.00	259.358	65	0555	~3.5
Net or Average	74.15	4.717	66.5		

Revision
10/79

MOISTURE IN STACK GAS DETERMINATION

METHOD 4

Plant Kingsford Charcoal Date 5/4/80

Run # 6 Location Sampled Burnside Ky

Volume of gas at meter conditions (CF) = VM = 3.94

Average meter temperature (°F) = TM = 80°F

Barometric pressure absolute (in Hg) = PB = 29.02

VMS = Volume of gas sampled at standard conditions (SCF)

$$VMS = \frac{(17.64)(VM)(PB)}{(TM + 460)} = \frac{17.64\ (3.94)(29.02)}{(80 + 460)} = 3.74$$

Volume of water final _____ Wt. of silica gel final _____

Volume of water initial _____ Wt. of silica gel initial _____

Volume collected V_1 = _____ Wt. of water V_2 = _____ gm

Total volume of water collected (ml) = $V_1 + V_2$ = VL = 74.6

Volume of water vapor at standard conditions (CF) = VW

VW = (.0471)(VL) = .0471 (74.6) = 3.51

Mole fraction of water vapor = M

$$M = \frac{VW}{VMS + VW} = \frac{(3.51)}{(3.74) + (3.51)} = M = .4839$$

Percent moisture = (100)(M) = 100 ( ) = %M 48.39

Revision
10/79

MOISTURE IN STACK GAS DETERMINATION

METHOD 4

Plant Kingsford Charcoal Date 5/5/80

Run # 9 Location Sampled Kiln #8 Outlet

1318 Start Time Volume of gas at meter conditions (CF) = VM = ~~273.758~~ = 275.549 / 273.759 Initial / 1.790

Average meter temperature (°F) = TM = 78°F

Barometric pressure absolute (in Hg) = PB = 28.90

VMS = Volume of gas sampled at standard conditions (SCF)

$$VMS = \frac{(17.64)(VM)(PB)}{(TM + 460)} = \frac{17.64\ (1.790)(28.9)}{(78 + 460)} = 1.696$$

538

Volume of water final _____ Wt. of silica gel final 331.52

Volume of water initial _____ Wt. of silica gel initial 306.32

Volume collected V_1 = _____ Wt. of water V_2 = 25.20 gm

Total volume of water collected (ml) = $V_1 + V_2$ = VL = 25.2

Volume of water vapor at standard conditions (CF) = VW

VW = (.0471)(VL) = .0471 (25.2) = 1.187

Mole fraction of water vapor = M

$$M = \frac{VW}{VMS + VW} = \frac{(1.187)}{(1.696) + (1.187)} = M = \cancel{.415}\ .4122$$

2.88

Percent moisture = (100)(M) = 100 (.4122) = %M 41.22

Revision
10/79

MOISTURE IN STACK GAS DETERMINATION

METHOD 4

Plant Kings Ford Charcoal Date 5-5-80

Run # 10 Location Sampled Outlet Top

Volume of gas at meter conditions (CF) = VM = 1.017

Average meter temperature (°F) = TM = 91.5

Barometric pressure absolute (in Hg) = PB = 28.80

VMS = Volume of gas sampled at standard conditions (SCF)

$$VMS = \frac{(17.64)(VM)(PB)}{(TM + 460)} = \frac{17.64\ (1.017)(28.80)}{(91.5 + 460)} = 0.9368$$

551.5

Volume of water final 240.7 Wt. of silica gel final 106.0

Volume of water initial 229.9 Wt. of silica gel initial 105.7

Volume collected V_1 = 10.8 Wt. of water V_2 = 0.3 gm

Total volume of water collected (ml) = $V_1 + V_2$ = VL = 11.1

Volume of water vapor at standard conditions (CF) = VW

VW = (.0471)(VL) = .0471 (11.1) = 0.52614

Mole fraction of water vapor = M

$$M = \frac{VW}{VMS + VW} = \frac{(0.52614)}{(0.9368) + (0.52614)} = M = 0.3608$$

1.4582

Percent moisture = (100)(M) = 100 (0.3608) = %M 36.1

Final

~~Impinger wt. = grams~~ Initial

~~Final~~
~~Silica gel~~

~~Silica gel wt. = grams~~ ~~Silica gel~~
~~Initial~~

A-27

Span Gas @ × 1000
50%

Date 5/2/8

Span Gas Conc. — 9978 PPM

THC Concentration

Time	Peak Ht	Range	Condenser ON or OFF	PPM
~~12:00~~ 2:00 PM	59	1 × 1000	OFF	11,764
2:15 PM	61	1 × 1000	OFF	12,163
2:30 PM	56	1 × 1000	OFF	11,166
2:45 PM	59	1 × 1000	OFF	11,764
3:00 PM	100	1 × 1000	OFF	19,940
3:15 PM	99	1 × 1000	OFF	19,740
3:30 PM	94	1 × 1000	OFF	18,743
3:45 PM	95	1 × 1000	OFF	18,943
4:00 PM	20	1 × 5000	OFF	19,940
4:15 PM	20.5	1 × 5000	OFF	20,438
4:30 PM	20	1 × 5000	OFF	19,940
4:45 PM	22	1 × 5000	OFF	21,934
5:00 PM	18.5	1 × 5000	OFF	18,444
5:15 PM	19	1 × 5000	OFF	18,943
5:30 PM	20	1 × 5000	OFF	19,940

Span Gas @ x5000
10%

Date 5/2/80

THC

Time	Peak Ht	Range	Condenser ON or OFF	PPM
5:45 PM	19	x 5000	OFF	18,943
6:00 PM	21	x 5000	OFF	20,937
6:15 PM	22	x 5000	OFF	21,934
6:30 PM	24	x 5000	OFF	23,928
6:45 PM	22.5	x 5000	OFF	22,432
7:00 PM	22.5	x 5000	OFF	22,432
7:15 PM	22.5	x 5000	OFF	22,432
7:30 PM	23.2	x 5000	OFF	23,130
7:45 PM	24.2	x 5000	OFF	24,127
8:00 PM	oscillating readings No Value determinable			
8:15 PM	22	x 5000	OFF	21,934
8:30 PM	22.5	x 5000	OFF	22,432
8:45 PM	26	x 5000	OFF	25,922
9:00 PM	24	x 5000	OFF	23,928
9:15 PM	26	x 5000	OFF	25,922

Date 5/2/80

THC

Time	Peak Ht	Range	Condenser ON or OFF	PPM
9:30 PM	25	x 5000	OFF	24,925
9:45 PM	25.5	x 5000	OFF	25,423
10:00 PM	26	x 5000	OFF	25,922
10:15 PM	25.5	x 5000	OFF	25,423
10:30 PM	26	x 5000	OFF	25,922
10:45 PM	27	x 5000	OFF	26,919
11:00 PM	27	x 5000	OFF	26,919
11:15 PM	26	x 5000	OFF	25,922
11:30 PM	26.5	x 5000	OFF	26,420
11:45 PM	26	x 5000	OFF	25,922
12:00 PM	26	x 5000	OFF	25,922
	End of Day 1			

Span Gas @ x 5000 10%

Date 5/03/80

THC

Time	Peak Ht	Range	Condenser ON or OFF	PPM
12:15 AM	25	x 5000	OFF	24,925
12:30 AM	25	x 5000	OFF	24,925
12:45 AM	25	x 5000	OFF	24,925
1:00 AM	25.2	x 5000	OFF	25,124
1:15 AM	24	x 5000	OFF	23,928
1:30 AM	25	x 5000	OFF	24,925
1:45 AM	23.7	x 5000	OFF	23,628
2:00 AM	23.2	x 5000	OFF	23,130
2:15 AM	23	x 5000	OFF	22,931
2:30 AM	Probe Out of Stack			–
2:45 AM	22.3	x 5000	OFF	22,233
3:00 AM	22	x 5000	OFF	21,934
3:15 AM	21.5	x 5000	OFF	21,435
3:30 AM	22	x 5000	OFF	21,934
3:45 AM	23	x 5000	OFF	22,931

Date 5/3/80

Span Gas @ .5000 10%

THC

Time	Peak Ht	Range	Condenser ON or OFF	PPM
4:00 Am	Malfunction	of Timer	Switch in Purge Control	
4:15 Am	24	.5000	OFF	23,928
4:30 Am	23	.5000	OFF	22,931
4:45 Am	22.5	.5000	OFF	22,432
5:00 Am	22	.5000	OFF	21,934
5:15 Am	22.8	.5000	OFF	22,731
5:30 Am	23	.5000	OFF	22,931
5:45 Am	22.1	.5000	OFF	22,033
6:00 Am	22.2	.5000	OFF	22,133
6:15 Am	22.2	.5000	OFF	22,133
6:30 Am	22	.5000	OFF	21,934
6:45 Am	23	.5000	OFF	22,931
7:00 Am	23	.5000	OFF	22,931
7:15 Am	23	.5000	OFF	22,931
7:30 Am	22.2	.5000	OFF	22,133

Date 5/03/80

THC

Time	Peak Ht	Range	Condenser ON or OFF	DRY PPM
7:45 Am	Sample Line Disconnected to add			~~17,148~~
↓ 9:00 Am	the condenser		No Samples Taken	
9:15 Am	17.2	× 5000	On	10,460 17,148
9:30 Am	18	× 5000	On	10,947 17,946
9:45 Am	No Sampling		—	—
10:00 Am	17.5	× 5000	On	10,642 17,447
10:15 Am	17.6	× 5000	On	10,703 17,547
10:30 Am	17.7	× 5000	On	10,764 17,646
10:45 Am	18.2	× 5000	On	11,068 18,145
11:00 Am	Shut off	Sample		—
11:15 Am	Shut off			—
11:30 Am	17	× 5000	On	10,338 16,949
11:45 Am	16.6	× 5000	On	10,095 16,550
12:00 Am	16	× 5000	On	9,730 15,952
12:15 Am	15.5	× 5000	On	9,426 15,453

Date 5/03/80

THC

Time	Peak Ht	Range	Condenser ON or OFF	WET PPM PRY
12:30 PM	16	×5000	On	9,730 15,952
12:45 PM	16	×5000	On	9,730 15,952
1:00 PM	14.3	×5000	On	8,696 14,257
1:15 PM	15	×5000	On	9,122 14,955
1:30 PM	15.2	×5000	On	9,243 15,154
1:45 PM	16.2	×5000	On	9,852 16,151
2:00 PM	16	×5000	On	9,730 15,952
2:15 PM	15.7	×5000	On	9,547 15,652
2:30 PM	15.2	×5000	On	9,243 15,154
2:45 PM	15.3	×5000	On	9,304 15,254
3:00 PM	12.6	×5000	On	7,662 12,562
3:15 PM	14.6	×5000	On	8879 14,556
3:30 PM	13.2	×5000	On	8027 13,160
3:45 PM	13.2	×5000	On	8027 13,160
4:00 PM	13.7	×5000	On	8,331 13,658

Date 5/03/80

THC

Time	Peak Ht	Range	Condenser ON or OFF	
4:15 Pm	15	× 5000	ON	9,122 14,955
4:30 Pm	14.7	× 5000	ON	8,939 14,655
4:45 PM	14.3	× 5000	ON	8696 14,257
5:00 Pm	14	× 5000	ON	8514 13,958
5:15 Pm	14.2	× 5000	ON	8635 14,157
5:30 Pm	14.4	× 5000	ON	8757 14,356
5:45 Pm	14.2	× 5000	ON	8,635 14,157
6:00 PM	14.3	× 5000	ON	8,696 14,257
6:15 PM	14.4	× 5000	ON	8,757 14,356
6:30 PM	13	× 5000	ON	7906 12,961
6:45 PM	13	× 5000	ON	7906 12,961
7:00 PM	13.2	× 5000	ON	8027 13,160
7:15 PM	13	× 5000	ON	7906 12,961
7:30 PM	12.4	× 5000	ON	7504 12,362
7:45 PM	13.6	× 5000	ON	8270 13,559

Date _____

THC

Time	Peak Ht	Range	Condenser ON or OFF	DRY PPM WET
8:00 PM	14.2	×5000	On	8635 14,157
8:15 PM	15	×5000	On	9122 14,955
8:30 PM	15	×5000	On	9122 14,955
8:45 PM	14.7	×5000	On	8939 14,655
9:00 PM	14.1	×5000	On	8,574 14,057
9:15 PM	14.1	×5000	On	8,574 14,057
9:30 PM	14.1	×5000	On	8,574 14,057
9:45 PM	13.6	×5000	On	8,270 13,559
10:00 PM	13.8	×5000	On	8392 13,758
10:15 PM	15	×5000	On	9122 14,955
10:30 PM	15.5	×5000	On	9426 15,453
10:45 PM	18.1	×5000	On	11,007 18,045
11:00 PM	16.2	×5000	On	9,852 16,151
11:15 PM	15.1	×5000	On	9182 15,054
11:30 PM	15.0	×5000	On	9122 14,955

Date 5/03/80

THC

Time	Peak Ht	Range	Condenser ON or OFF	* → Dry wet PPM
11:45	15	× 5000	On	9122 14,955
12:00	16.5	× 5000	On	10,034 16,450

Span Gas @ x 5000 10%

Date 5/04/80

Total Hydro Carbon

Time	Peak Ht	Range	Condenser ON or OFF	* - WET DRY * PPM
12:15 Am	16.7	x 5000	ON	9,673 16,649
12:30 Am	17.0	x 5000	ON	9,847 16,949
12:45 Am	16.4	x 5000	ON	9,499 16,350
1:00 Am	16.7	x 5000	ON	9,673 16,649
1:15 Am	16.7	x 5000	ON	9,673 16,649
1:30 Am	16.4	x 5000	ON	9,499 16,350
1:45 Am	16	x 5000	ON	9,268 15,952
2:00 Am	15	x 5000	ON	8,689 14,955
2:15 Am	16	x 5000	ON	9,268 15,952
2:30 Am	16	x 5000	ON	9,268 15,952
2:45 Am	15.9	x 5000	ON	9,210 15,852
3:00 Am	16.2	x 5000	ON	9,384 16,151
3:15 Am	16.8	x 5000	ON	9,731 16,749
3:30 Am	17.7	x 5000	ON	10,349 17,646
3:45 Am	18	x 5000	ON	10,546 17,946

Date 5/04/80

Total Hydrocarbon

Time	Peak Ht	Range	Condenser ON or OFF	PPM
4:00 Am	18.2	x 5000	On	10,632 18,145
4:15 Am	18.2	x 5000	On	10,632 18,145
4:30 Am	18.1	x 5000	On	10,574 18,045
4:45 Am	18.0	x 5000	On	10,516 17,946
5:00 Am	18.3	x 5000	On	10,691 18,245
5:15 Am	18.5	x 5000	On	10,808 18,444
5:30 Am	19.2	x 5000	On	11,217 19,142
5:45 Am	19.1	x 5000	On	10,796 19,042
6:00 Am	19.3	x 5000	On	10,910 19,242
6:15 Am	19.6	x 5000	On	11,093 19,541
6:30 Am	18.5	x 5000	On	10,[illegible] 18,444
6:45 Am	19	x 5000	On	10,[illegible] 18,943
7:00 Am	19	x 5000	On	10,[illegible] 18,943
7:15 Am	20.1	x 5000	On	11,[illegible] 20,039
7:30 Am	20	x 5000	On	11,[illegible] 19,940

Date 5/04/80

THC

Time	Peak Ht	Range	Condenser ON or OFF	PPM
7:45 Am	20.2	x 5000	On	11,908 20,139
8:00 Am	12.8	x 5000	OFF	12,761
8:15 Am	14.8	x 5000	OFF	14,755
8:30 Am	15.2	x 5000	OFF	15,154
8:45 Am	16.2	x 5000	OFF	16,151
9:00 Am	17	x 5000	OFF	16,949
9:15 Am	13	x 5000	On	7530 12,961
9:30 Am	15	x 5000	On	8,688 14,955
9:45 Am	15.3	x 5000	On	8862 15,254
10:00 Am	15.2	x 5000	On	8804 15,154
10:15 Am	15.3	x5000	On	8862 15,254
10:30 Am	15.5	x 5000	On	8978 15,45[illegible]
10:45 Am	15	x 5000	On	8,688 14,955
11:00 Am	15	x 5000	On	8688 14,955
11:15 Am	15	x 5000	On	8688 14,955

Date 5/04/80

THC

Time	Peak Ht	Range	Condenser ON or OFF	Wet — PPM
11:30 Am	15.5	x 5000	On	15,453
11:45 Am	15.5	x 5000	On	15,453
12:00 Am	16	x 5000	On	15,952
12:15 Pm	16.3	x 5000	On	16,251
12:30 Pm	16.3	x 5000	On	16,251
12:45 Pm	16.8	x 5000	On	16,749
1:00 Pm	14.8	x 5000	On	14,755
1:15 Pm	14.1	x 5000	On	14,057
1:30 Pm	14.2	x 5000	On	14,157
1:45 Pm	14.9	x 5000	On	14,855
2:00 Pm	17.8	x 5000	On	17,746
2:15 PM	18.8	x 5000	On	18,743
2:30 PM	19	x 5000	On	18,943
2:45 PM	20	x 5000	On	19,940
3:00 PM	20.1	x 5000	On	20,937

Date 5/04/80

THC

Time	Peak Ht	Range	Condenser ON or OFF	Wet - PPM
3:15 PM	19.3	× 5000	On	10,198 19,242
3:30 PM	18	× 5000	On	9~~371~~ 345 17,946
3:45 PM	17.7	× 5000	On	9358 17,646
4:00 PM	16.5	× 5000	On	8718 16,450
4:15 PM	16.3	× 5000	On	8603 16,251
4:30 PM	15	× 5000	On	7920 14,955
4:45 PM	16.2	× 5000	On	8563 16,151
5:00 PM	16	× 5000	On	8458 15,952
5:15 PM	16.2	× 5000	On	8563 16,151
5:30 PM	14.9	× 5000	On	7883 14,855
5:45 PM	14.9	× 5000	On	7883 14,855
6:00 PM	15.0	× 5000	On	7920 14,955
6:15 PM	5	× 5000	Off	4,985
6:30 PM	13.6	× 5000	OFF	13,559
6:45 PM	18.7	× 5000	OFF	18,643

Date 5/04/80

THC

Time	Peak Ht	Range	Condenser ON or OFF	Wet - * PPM
7:00 PM	19.5	× 5000	OFF	19,441*
7:15 PM	Filter Pluged			
7:30 PM				
7:45 PM				
8:10 PM		↓ Changed		
8:15 PM	13	× 5000	ON	8694 12,961
8:30 PM	15.7	× 5000	ON	8295 15,652
8:45 PM	~~15~~ 5.6	× 5000	ON	2958 5,583
9:00 PM	5.8	× 5000	ON	3064 5,782
9:15 PM	5	× 5000	ON	3055 ~~2642~~ 4,985
9:30 PM	4.5	× 5000	ON	747 ~~2472~~ 4,486
9:45 PM	7	× 5000	ON	4217 ~~3698~~ 6,979
10:00 PM	6.2	× 5000	ON	782 ~~3275~~ 6,181
10:15 PM	6	× 5000	ON	669 ~~3170~~ 5,982
10:30 PM	5.3	× 5000	ON	3233 ~~2855~~ 5,284

Date 5/04/80

THC

Time	Peak Ht	Range	Condenser ON or OFF	Wet-* PPM
10:45 PM	5.1	x 5000	On	3101 5,084
11:00 PM	5.1	x 5000	On	3101 5,084
11:15 PM	4.8	x 5000	On	2928 4,785
11:30 PM	5.2	x 5000	On	3182 5,184
11:45 PM	3.5	x 5000	On	2135 3,489
12:00 PM	3	x 5000	On	1830 2,991

Date 5/05/80

THC

Time	Peak Ht	Range	Condenser ON or OFF	Wet — PPM
12:15 Am	3.4	× 5000	ON	2032 3321
12:30 Am	3.3	× 5000	ON	1973 3224
12:45 Am	30.2	× 500	ON	1952 3190
1:00 Am	26	× 500	ON	1586 2592
1:15 Am	22.5	× 500	ON	1372 2243
1:30 Am	22	×500	ON	1342 2193
1:45 Am	23	× 500	ON	1403 2293
2:00 Am	23.5	× 500	ON	1433 2342
2:15 Am	26.7	× 500	ON	1628 2661
2:30 Am	27	× 500	ON	1646 2691
2:45 Am	25.3	× 500	ON	1543 2522
3:00 Am	25.5	× 500	ON	1555 2542
3:15 Am	25	× 500	ON	1525 2492
3:30 Am	25.9	×500	ON	1580 2582
3:45 Am	26.3	× 500	ON	1604 2622

Date 5/05/80

THC

Time	Peak Ht	Range	Condenser ON or OFF	PPM
4:00 Am	25	x 500	On	1525 2492
4:15 Am	25	x 500	On	1525 2492
4:30 Am	27	x 500	On	1646 2691
4:45 Am	29.9	x 500	On	1824 2981
5:00 Am	28	x 500	On	1708 2791
5:15 Am	26	x 500	On	1586 2592
5:30 Am	23.5	x 500	On	1433 2342
5:45 Am	21.6	x 500	On	1317 2153
6:00 Am	23	x 500	On	1403 2293
6:15 Am	24.5	x 500	On	1494 2442
6:30 Am	25.5	x 500	On	1555 2542
6:45 Am	20	x 500	On	1220 1994
7:00 Am	24	x 500	On	1463 2392
7:15 Am	20	x 500	On	1220 1994
7:30 Am	19	x 500	On	1158 1894

Date 5/05/80

THC

Time	Peak Ht	Range	Condenser ON or OFF	PPM
7:45	17	x 500	On	1036 1694
8:00	21	x 500	On	1280 2093
8:15	18	x 500	On	1097 1794
8:30	14	x 500	On	853 1395
8:45	21.5	x 5000	OFF	
9:00	19.7	x 5000	OFF	21435
9:15				19640
9:30	19	x 5000	OFF	18945
9:45	17	x 5000	OFF	16940
10:00	9	x 500	On	548 897
10:15	8.5	x 500	On	518 847
1030	71	x 100	ON	866 1416
1045	32	x 500	ON	1952 3190
1100	34	x 500	ON	2074 3390
1115	46	x 500	ON	2806 4586

Date 5-5-80

THC

Time	Peak Ht	Range	Condenser ON or OFF	
1130	63	x 500	ON	3843 6281
1145	59	x 500	ON	3599 588[illegible]
1200	55	x 500	ON	3356 548[illegible]
1215	64	x 500	ON	3905 638[illegible]
1230	62	x 500	ON	3782 618[illegible]
1245	65	x 500	ON	3966 648[illegible]
1300	87	x 500	OFF	867
1315	19.5	x 5000	OFF	1944
1330	20	x 5000	OFF	199[illegible]
1345	20	x 5000	OFF	1994
1400	19	x 5000	OFF	189
1415	19	x 5000	OFF	18943
1430	19	x 5000	OFF	1894
1445	19	x 5000	OFF	1894
1500	19	x 500	OFF	1894

Date 5-5-80

THC

Time	Peak Ht	Range	Condenser ON or OFF	
1515	15	x 5000	ON	8790 14955
1530	16.5	x 5000	ON	9669 16451
1545	15	x 5000	ON	8790 14955
1600	13	x 5000	ON	7618 12961
1615	13	x 5000	ON	7618 12961
1630	11	x 5000	ON	6446 10967
1645	11	x 5000	ON	6446 10967
1700	10.5	x 5000	ON	6153 10469
1715	7.5	x 5000	ON	4395 7478
1730	8.0	x 5000	ON	4688 7976
1745	10.0	x 5000	ON	5860 9970
1800	10.5	x 5000	ON	6153 10469
1815	11.0	x 5000	ON	6446 10967
1830	11.5	x 5000	ON	6739 11461
1845	13	x 5000	ON	7618 12961

Date 5-5-80

THC

Time	Peak Ht	Range	Condenser ON or OFF	
1900	13.0	x 5000	ON	8282 12,961
1915	13.0	x 5000	ON	8282 12,961
1930	10.5	x 5000	ON	6689 10,469
1945	10.0	x 5000	ON	6370 9,970
2000	9.5	x 5000	ON	6052 9,472
2015	5.0	x 5000	ON	3185 4,985
2030	6.0	x 5000	ON	3822 5,982
2045	5.5	x 5000	ON	3504 5,484
2100	5.0	x 5000	ON	3185 4,985
2115	40.0	x 5000	ON	25,483 39,880
2130	21.5	x 5000	ON	13,697 21,436
2145	14.0	x 5000	ON	8919 13,958
2200	13.5	x 5000	ON	8600 13,460
2215	13.0	x 5000	ON	8282 12,961
2230	12.0	x 5000	ON	7644 11,964

Date 5-5-80

THC

Time	Peak Ht	Range	Condenser ON or OFF	PPM wet
2245	12.0	x 5000	ON	7644 11,964
2300	11.5	x 5000	ON	7326 11,466
2315	10.5	x 5000	ON	6689 10,469
2330	8.5	x 5000	ON	5415 8,475
2345	7.0	x 5000	ON	4459 6,979
2400	7.5	x 5000	ON	4778 7,478

Date 5-6-80

THC

Time	Peak Ht	Range	Condenser ON or OFF	
0015	7.0	1 x 5000	ON	4459 6979
0030	6.5	1 x 5000	ON	4144 6481
0045	62	1 x 500	ON	3949 6181
0100	58.5	1 x 500	ON	3726 5832
0115	44	1 x 500	ON	2803 4387
0130	41	1 x 500	ON	2612 4086
0145	73	1 x 500	OFF	7278
0200	22	1 x 500	ON	1401 2193
0215	1.5	1 x 500	ON	96 150
0230	1.0	1 x 500	ON	64 100
0245	0.5	1 x 500	ON	32 50
0300	0.5	1 x 500	ON	32 50
0315	0.5	1 x 500	ON	32 50
0330	0.5	1 x 500	ON	32 50
0345	1.0	1 x 500	ON	64 100

Date 5-6-80

THC

Time	Peak Ht	Range	Condenser ON or OFF	
0400	1.0	1 x 500	OFF	100
0415	29.	1 x 5000	OFF	28,913
0430	27	1 x 5000	OFF	26,919
0445	Removed flexline because of leak			
0500				
0515				
0530	27	1 x 5000	ON	17201 26,919
0545	29.5	1 x 5000	ON	18,724 29,412
0600	27.5	1 x 5000	ON	17520 27,418
0615	w/ leak 29.5	1 x 5000	ON	
0630	30 w/leak [illegible]	1 x 5000	ON	
0645	Probe Clogged	1 x 5000	OFF	—
0700	Probe Clogged	1 x 5000	OFF	—
0715	31	1 x 5000	OFF	
0730	Leak fixed 30	1 x 5000	OFF	29,910

Date 5-6-80

THC

Time	Peak Ht	Range	Condenser ON or OFF	
0745	30	1 X 5000	OFF	29,910
0800	30	1 X 5000	OFF	29,910
0815	30	1 X 5000	ON	19,112 29,910
0830	29.5	1 X 5000	ON	18,794 29,412
0845	29.5	1 X 5000	ON	18,794 29,412
0900	29.5	1 X 5000	ON	18,794 29,412
0915	30	1 X 5000	ON	19,112 29,910
0930	30.5	1 X 5000	ON	19,431 30,409
0945	32.0	1 X 5000	ON	20,386 31,904
1000	32.0	1 X 5000	ON	20,386 31,904
1015	31.0	1 X 5000	ON	19,749 30,907
1030	29	1 X 5000	ON	18,476 28,913
1045	28	1 X 5000	ON	17,838 27,916
1100	27	1 X 5000	ON	17,201 26,919
1115	27	1 X 5000	ON	17,201 26,919

Date 5-6-80

THC

Time	Peak Ht	Range	Condenser ON or OFF	
1130	26.5	1 x 5000	ON	16,883 26,421
1145	26	1 x 5000	ON	16,564 25,922
1200	26	1 x 5000	ON	16,564 25,922
1215	26	1 x 5000	ON	16,564 25,92[illegible]
1230	29	1 x 5000	ON	18,475 28,913
1245	33	1 x 5000	ON	21,023 32,901
1300	34	1 x 5000	ON	21,660 33,898
1315	34.5	1 x 5000	ON	21,979 34,397
1330	35	1 x 5000	ON	22,297 34,895
1345	36	1 x 5000	ON	22,934 35,892
1400	36	1 x 5000	ON	22,934 35,892
1415	35	1 x 5000	ON	22,297 34,895
1430	34	1 x 5000	ON	21,660 33,898
1445	33.5	1 x 5000	ON	21,342 33,400
1500	32	1 x 5000	ON	20,386 31,904

Date 5-6-8

THC

Time	Peak Ht	Range	Condenser ON or OFF	
1515	32.5	1 X 5000	ON	20,705 32,403
1530	32.5	1 x 5000	ON	20,705 32,40
1545	32.5	1 X 5000	ON	20,705 32,40
1600	32.5	1 x 5000	ON	20,705 32,40
1615	32.0	1 x 5000	ON	20,386 31,904
1630	32.0	1 X 5000	ON	20,386 31,904
1645	32.0	1 X 5000	ON	20,386 31,904
~~1700~~				
~~1715~~				
~~1730~~				
~~1745~~				
~~1800~~				
~~1815~~				
~~1830~~				
~~1845~~				

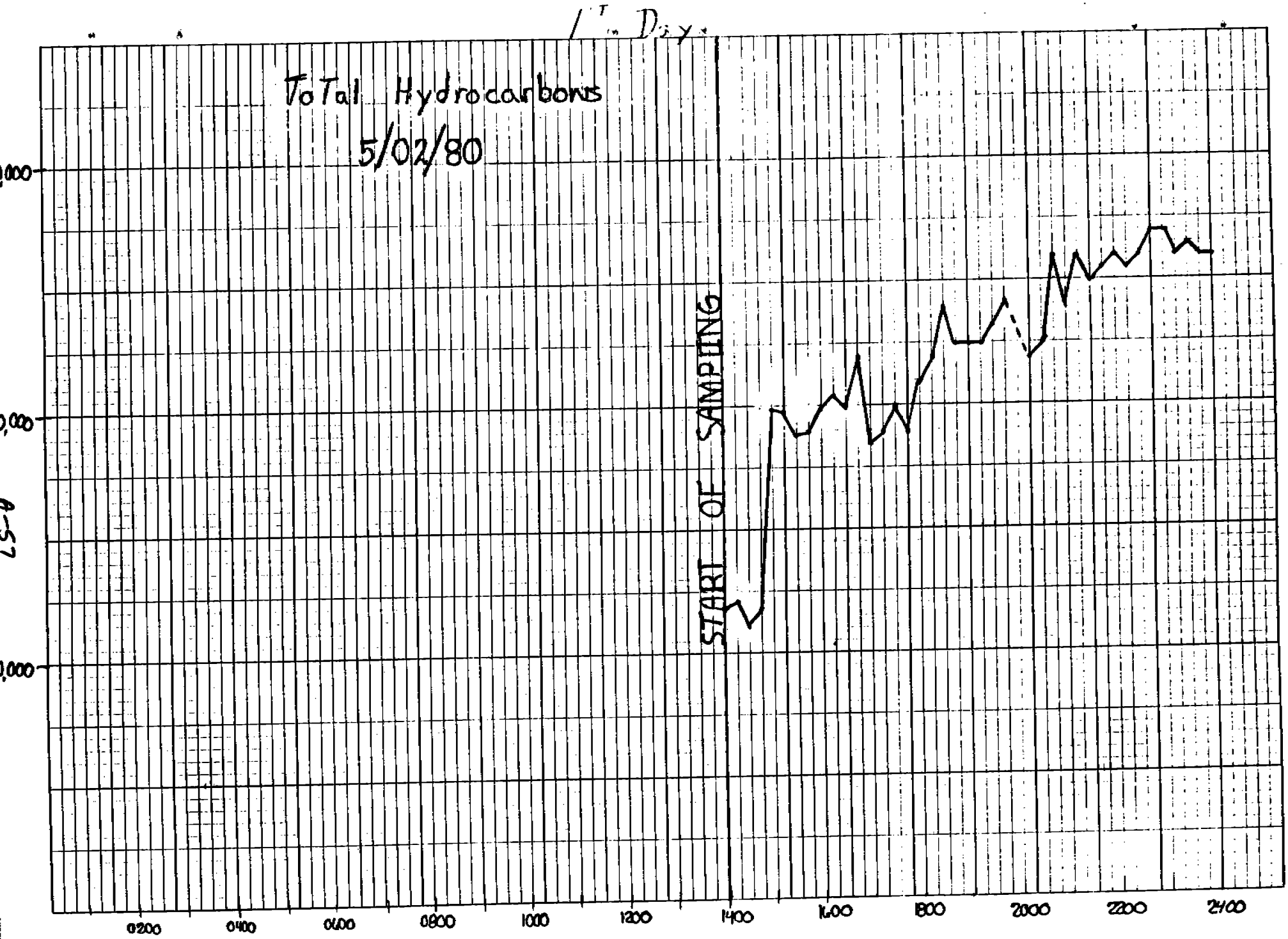

46 0780
K+E 10 X 10 TO THE INCH • 7 X 10 INCHES
KEUFFEL & ESSER CO. MADE IN U.S.A.

K+E 10 X 10 TO THE INCH • 7 X 10 INCHES
KEUFFEL & ESSER CO. MADE IN U.S.A.
46 0780

K+E 10 X 10 TO THE INCH • 7 X 10 INCHES
KEUFFEL & ESSER CO. MADE IN U.S.A.

46 0780

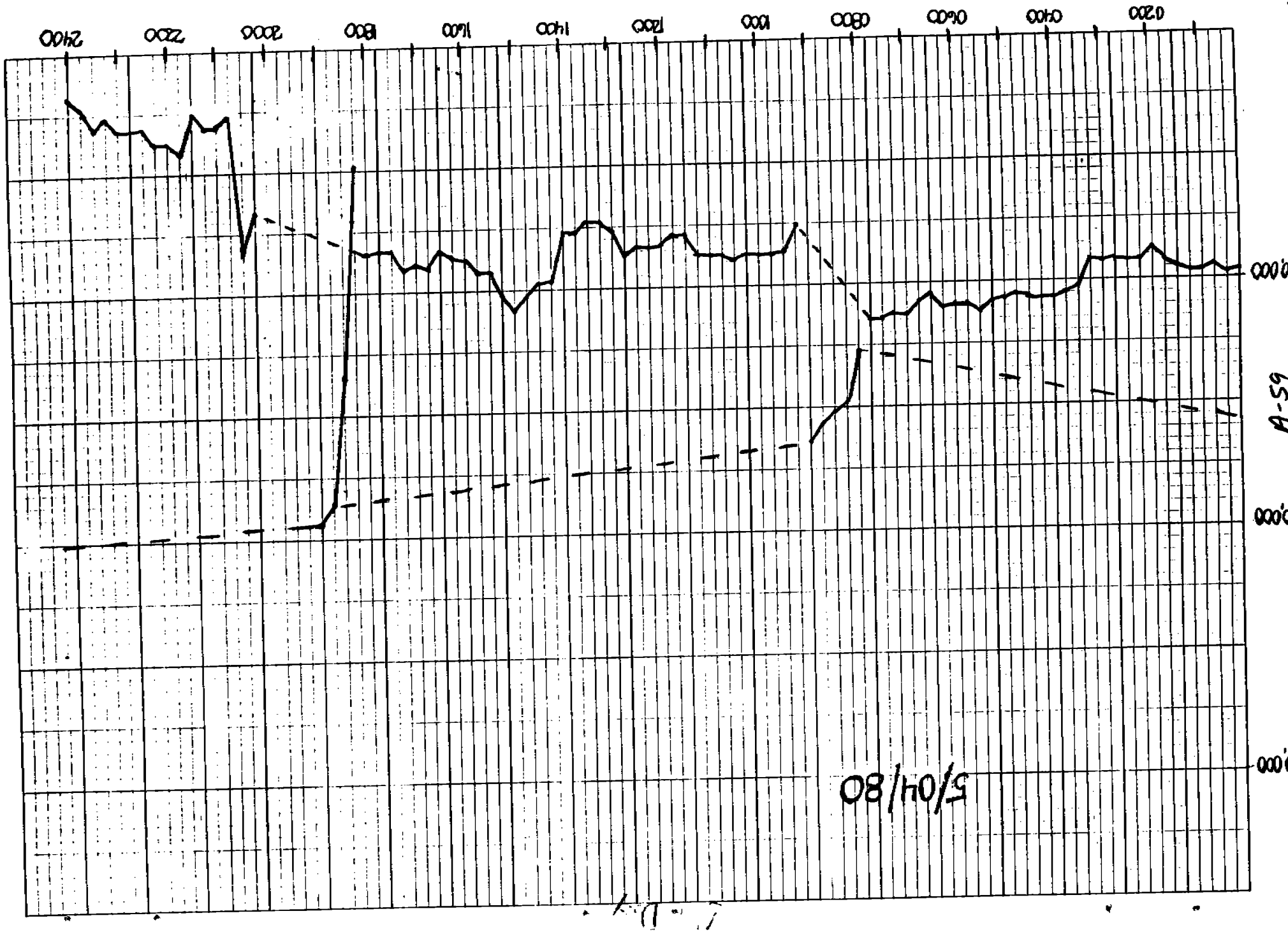

A-59

5/05/80
0200
0400
0600
0800
1000
1200
1400
1600
1800
2000
2200
2400
10 X 10 TO THE INCH • 7 X 10 INCHES
KEUFFEL & ESSER CO. MADE IN U.S.A.
46 0780

K+E 10 X 10 TO THE INCH • 7 X 10 INCHES
KEUFFEL & ESSER CO. MADE IN U.S.A.

46 0780

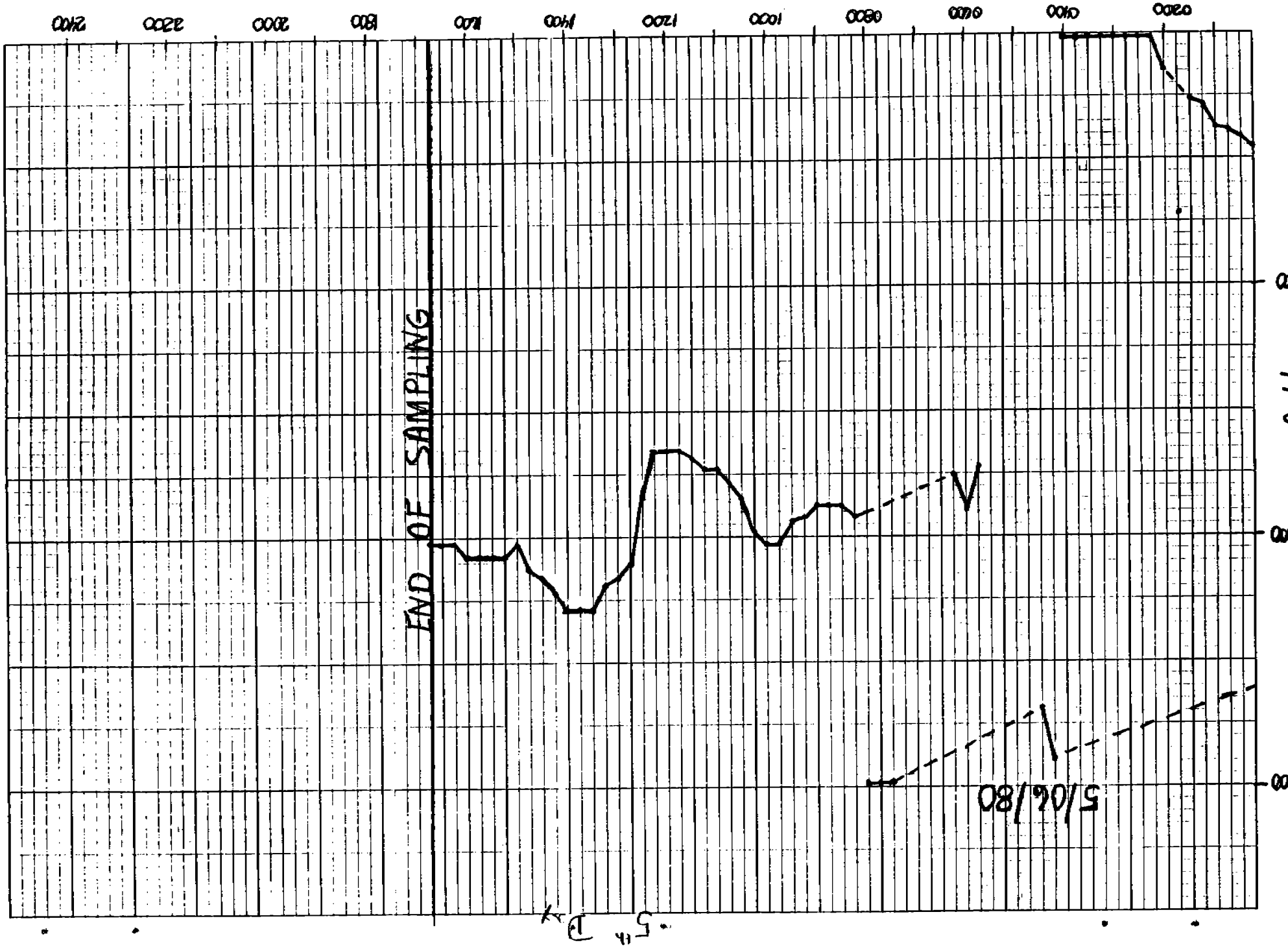

$$C \times (1-M)$$

11 PM	8 AM
38	42

CO

Date 5-2-80

Time	Peak Ht or Recorder Deflection	Range	Condenser ON or OFF		PPM
1330	24.5	3	OFF	2,291	2,291 ~~7,062~~
1345	23.0	3	OFF	2,132	2,132 ~~6,687~~
1400	58.0	3	OFF	5,756	5,756 ~~21,100~~
1415	56.5	3	OFF	5,596	5,596 ~~20,651~~
1430	71.5	3	OFF	8,261	8,261 ~~36,380~~
1445	64.5	3	OFF	6,396	6,396 ~~25,145~~
1500	60.0	3	OFF	5,916	5,916 ~~22,470~~
1515	61.0	3	OFF	6,076	6,076 ~~23,005~~
1530	50.0	3	OFF	4,903	4,903 ~~17,387~~
1545	50.0	3	OFF	4,903	4,903 ~~17,387~~
1600	58.0	3	OFF	5,489	5,489 ~~20,116~~
1615	62.0	3	OFF	6,129	6,129 ~~23,433~~
1630	48.0	3	OFF	4,690	4,690 ~~16,371~~
1645	48.0	3	OFF	4,690	4,690 ~~16,371~~
1700	57.0	3	OFF	5,596	5,596 ~~21,152~~

Date 5-2-80

Time	Peak Ht	Range	Condenser ON or OFF		PPM
1715	60.0	3	OFF	5,916	5,916 ~~22,170~~
1730	59.0	3	OFF	5,809	5,809 ~~21,935~~
1745	53.0	3	OFF	5,223	5,223 ~~18,725~~
1800	53.0	3	OFF	5,223	5,223 ~~18,725~~
1815	52.0	3	OFF	5,063	5,063 ~~18,190~~
1830	50.0	3	OFF	4,903	4,903 ~~17,387~~
1845	52.0	3	OFF	5,063	5,063 ~~18,190~~
1900	51.0	3	OFF	5,956	4,956 ~~17,656~~
1915	32.0	3	OFF	3,517	3,517 ~~11,556~~
1930	32.0	3	OFF	3,517	3,517 ~~11,556~~
1945	32.0	3	OFF	3,517	3,517 ~~11,556~~
2000	46.0	3	OFF	4,477	4477 ~~15,515~~
2015	46.0	3	OFF	4,477	4477 ~~15,515~~
2030	20.0	3	OFF	1,865	1865 ~~5,885~~
2045	22.0	3	OFF	2,078	2078 ~~6,420~~

Date 5-2-80

Time	Peak Ht	Range	Condenser ON or OFF		PPM
2100	28.0	3	off	2,611	2,611 ~~8,560~~
2115	31.0	3	off	2,931	2,931 ~~8,881~~
2130	49.0	3	off	4,743	4,743 ~~16,906~~
2145	50.0	3	off	4,903	4,903 ~~17,387~~
2200	56.0	3	off	5,489	5,489 ~~20,116~~
2215	60.0	3	off	5,916	5,916 ~~22,470~~
2230	58.0	3	off	5,756	5,756 ~~21,400~~
2245	58.0	3	off	5,756	5,756 ~~21,400~~
2300	60.0	3	off	5,916	5,916 ~~22,470~~
2315	52.0	3	off	5,063	5,063 ~~18,190~~
2330	58.0	3	off	5,756	5,756 ~~21,400~~
2345	53.0	3	off	5,223	5,223 ~~18,725~~
2400	56.0	3	off	5,489	5,489 ~~20,116~~
			off		
			off		

Date 5-3-80

Time	Peak Ht	Range	Condenser ON or OFF		PPM
0015	40.0	3	OFF	3,837	3,837 ~~12,840~~
0030	48.0	3	OFF	4,690	4,690 ~~16,371~~
0045	47.0	3	OFF	4,583	4,583 ~~15,993~~
0100	65.0	3	OFF	6,449	6,449 ~~25,745~~
0115	54.0	3	OFF	5,330	5,330 ~~19,581~~
0130	54.0	3	OFF	5,330	5,330 ~~19,581~~
0145	Sample line plugged				
0200					
0215					
0230					
0245					
0300					
0315					
0330					
0345					

Date 5-3-80

Time	Peak Ht	Range	Condenser ON or OFF
0730			
0745			
0800			
0815			
0830			
0845			
0900			
0915			
0930			
0945			
1000			
1015			
1030			
1045			

Date 5-3-80

Time	Peak Ht	Range	Condenser ON or OFF	
1100				
1115				
1130	76.0	1	ON	2,100 ~~34,989~~
1145	79.0	1	ON	34,561 ~~34,129~~
1200	79.0	1	ON	34,561 ~~34,129~~
1215	79.5	1	ON	34,775
1230	78.0	1	ON	33,705
1245	79.0	1	ON	34,561 ~~34,129~~
1300	80.0	1	ON	35,310
1315	81.0	1	ON	35,845
1330	81.0	1	ON	35,845
1345	84.0	1	ON	38,841
1400	83.0	1	ON	37,450
1415	84.0	1	ON	38,841
1430	83.0	1	ON	37,450

Date 5-3-80

Time	Peak Ht	Range	Condenser ON or OFF	PPM
1445	80.0	1	ON	35,310
1500	80.0	1	ON	35,310
1515	78.0	1	ON	33,705
1530	78.0	1	ON	33,705
1545	72.0	1	ON	29,425
1600	72.0	1	ON	29,425
1615	77.0	1	ON	32,902
1630	78.0	1	ON	33,705
1645	70.0	1	ON	28,355
1700	70.0	1	ON	28,355
1715	70.0	1	ON	28,355
1730	73.0	1	ON	30,281
1745	73.0	1	ON	30,281
1800	73.0	1	ON	30,281
1815	74.0	1	ON	31,030

Date 5-3-80

Time	Peak Ht	Range	Condenser ON or OFF	PPM
1830	74.0	1	ON	31,030
1845	76.0	1	ON	32,100
1900	76.0	1	ON	32,100
1915	76.0	1	ON	32,100
1930	74.0	1	ON	31,030
1945	76.0	1	ON	32,100
2000	78.0	1	ON	33,705
2015	81.0	1	ON	35,845
2030	80.0	1	ON	35,310
2045	82.0	1	ON	36,701
2100	78.0	1	ON	33,705
2115	75.0	1	ON	31,779
2130	75.0	1	ON	31,779
2145	74.0	1	ON	31,030
2200	74.0	1	ON	31,030

Date 5-3-80

Time	Peak Ht	Range	Condenser ON or OFF	PPM
2215	78.0	1	ON	33,705
2230	83.0	1	ON	37,450
2245	84.0	1	ON	38,841
2300	89.0	1	ON	42,800
2315	83.0	1	ON	37,450
2330	82.0	1	ON	36,701
2345	84.0	1	ON	38,841
2400	87.0	1	ON	41,195

Date 5-4-80

Time	Peak Ht	Range	Condenser ON or OFF	PPM
0015	83.0	1	ON	37,450
0030	83.0	1	ON	37,450
0045	83.0	1	ON	37,450
0100	81.0	1	ON	35,845
0115	82.0	1	ON	36,701
0130	81.0	1	ON	35,845
0145	79.0	1	ON	34,561
0200	77.0	1	ON	32,902
0215	79.0	1	ON	34,561
0230	79.0	1	ON	34,561
0245	77.0	1	ON	32,902
0300				
0315				
0330				
0345				

Date 5-4-80

Time	Peak Ht	Range	Condenser ON or OFF	PPM
0400	82.0	1	ON	36,701
0415	82.0	1	ON	36,701
0430	82.0	1	ON	36,701
0445	83.0	1	ON	37,450
0500	84.0	1	ON	38,841
0513	84.0	1	ON	38,841
0530	85.0	1	ON	39,162
0545	85.0	1	ON	39,162
0600	85.0	1	ON	39,162
0615	84.0	1	ON	38,841
0630	84.0	1	ON	38,841
0645	84.0	1	ON	38,841
0700	84.0	1	ON	38,841
0715	84.0	1	ON	38,841
0730	87.0	1	ON	41,195

Date 5-4-80

Time	Peak Ht	Range	Condenser ON or OFF	PPM
0745	86.0	1	ON	40,125
0800				
0815				
0830				
0845				
0900				
0915				
0930				
0945	77.0	1	ON	32,902
1000	77.0	1	ON	32,902
1015	75.0	1	ON	31,779
1030	75.0	1	ON	31,779
1045				
1100	84.0	1	ON	38,841
1115	79.0	1	ON	34,561

Date 5-4-80

Time	Peak Ht	Range	Condenser ON or OFF	
1130				
1145				
1200				
1215				
1230				
1245	79.0	1	ON	34,561
1300	72.0	1	ON	29,425
1315	66.0	1	ON	25,573
1330	64.0	1	ON	24,610
1345	62.0	1	ON	23,326
1400	67.0	1	ON	26,322
1415	76.0	1	ON	32,100
1430	80.0	1	ON	35,310
1445	84.0	1	ON	38,841
1500	88.0	1	ON	41,954

Date 5-4-80

Time	Peak Ht	Range	Condenser ON or OFF	PPM
1515	83.0	1	ON	37,450
1530	78.0	1	ON	33,705
1545	74.0	1	ON	31,030
1600	70.0	1	ON	28,356
1615	66.0	1	ON	25,573
1630	64.0	1	ON	24,610
1645	64.0	1	ON	24,610
1700	64.0	1	ON	24,610
1715	63.0	1	ON	24,075
1730	64.0	1	ON	24,610
1745	63.0	1	ON	24,075
1800	64.0	1	ON	24,610
1815	58.0	1	OFF	21,400
1830	46.0	1	OFF	15,515
1845	45.0	1	OFF	14,819

Date 5-4-80

Time	Peak Ht	Range	Condenser ON or OFF	
1900	59.0	1	OFF	21,935
1915	60.0	1	OFF	22,470
1930	38.0	1	ON	12,091
1945	14.0	1	ON	3,959
2000	14.0	1	ON	3,959
2015	14.0	1	ON	3,959
2030	47.0	1	ON	15.943
2045	59.0	1	ON	21,935
2100	42.0	1	ON	13,968
2115	29.0	1	ON	8,847
2130	26.0	1	ON	7,462
2145	25.0	1	ON	6,396
2200	32.0	1	ON	10,286 ~~8,954~~
2215	31.0	1	ON	9,380
2230	31.0	1	ON	9,380

Date 5-4-80

Time	Peak Ht	Range	Condenser ON or OFF	
2245	28.0	1	on	8,540
2300	26.0	1	on	7,462
2315	27.0	1	on	7,995
2330	25.0	1	on	7,355 ~~6,396~~
2345	20.0	1	on	5,885
2400	16.0	1	on	4,583

Date 5-5-80

Time	Peak Ht	Range	Condenser ON or OFF		PPM
0015	15.0	1	ON	4,264	4,264
0030	16.0	3	ON	1,492	1492 4,583
0045	38.0	3	ON	3,677	3677 12,041
0100	38.0	3	ON	3,677	3677 12,041
0115	41.0	3	ON	3,890	3890
0130	40.0	3	ON	3,837	3837 12,840
0145	35.0	3	ON	3,357	3,357 10,926
0200	37.0	3	ON	3,517	3,517 11,556
0215	41.0	3	ON	3,890	3,890 13,325
0230	45.0	3	ON	4,370	4,370 14,924
0245	45.0	3	ON	4,370	4,370 14,924
0300	43.0	3	ON	4,157	4,157 14,124
0315	44.0	3	ON	4,264	4,264 14,391
0330	43.0	3	ON	4,157	4,157 14,124
0345	45.0	3	ON	4,370	4,370 14,924

Date 5-5-80

Time	Peak Ht	Range	Condenser ON or OFF		
0400	46.0	3	ON	4,477	4477 ~~15,515~~
0415	43.0	3	ON	4,157	4,157 ~~14,124~~
0430	45.0	3	ON	4,370	4,370 ~~14,924~~
0445	46.0	3	ON	4,477	4477 ~~15,515~~
0500	48.0	3	ON	4,690	4,690 ~~16,371~~
0515	46.0	3	ON	4,477	4477 ~~15,515~~
0530	41.0	3	ON	3,890	3,890 ~~13,326~~
0545	37.0	3	ON	3,517	3,517 ~~11,556~~
0600	34.0	3	ON	3,251	3,251 ~~10,446~~
0615	37.0	3	ON	3,517	3517 ~~11,556~~
0630	40.0	3	ON	3,837	3,837 ~~12,840~~
0645	42.0	3	ON	4,050	4050 ~~13,968~~
0700	37.0	3	ON	3,517	3517 ~~11,556~~
0715	34.0	3	ON	3,251	325.1 ~~10,446~~
0730	32.0	3	ON	3,038	~~3038~~ ~~10,206~~

Date 5-5-80

Time	Peak Ht	Range	Condenser ON or OFF		
0745	33.0	3	ON	3,144	3144 ~~16,313~~
0800	32.0	3	ON	3,038	3038 ~~16,286~~
0815	32.0	3	ON	3,038	3038 ~~16,286~~
0830	31.0	3	ON	2,931	2931 ~~9,380~~
0845	32.0	3	ON	3,038	3038 ~~16,286~~
0900	32.0	3	ON	3,038	3038 ~~16,286~~
0915	32.0	3	ON	3,038	3038 ~~16,286~~
0930	60.0	1	OFF		22,470
0945	60.0	1	OFF		22,470
1000		Purge			
1015					
1030					
1045					
1100	52.0	3	ON	5,063	5063 ~~18,140~~
1115	51.0	3	ON	4,956	4,956 ~~17,655~~

Date 5-5-80

Time	Peak Ht	Range	Condenser ON or OFF	
1130	64.0	3	ON 6,380	6380 24,610
1145	29.0	1	ON	8,847
1200	29.0	1	ON	8,847
1215	27.0	1	ON	7,995
1230	27.0	1	ON	7,995
1245	26.0	1	ON	7,462
1300			OFF	
1315				
1330	63.0	1	OFF	24,075
1345	67.0	1	OFF	26,322
1400	68.0	1	OFF	26,969
1415	65.0	1	OFF	25,145
1430	65.0	1	OFF	25,145
1445	64.0	1	OFF	24,610
1500	64.0	1	OFF	24,610

Date 5-5-80

Time	Peak Ht	Range	Condenser ON or OFF	
1515	65.0	1	ON	25,145
1530	65.0	1	ON	25,145
1545	65.0	1	ON	25,145
1600	59.0	1	ON	21,935 ~~18,190~~
1615	52.0	1	ON	18,190
1630	52.0	1	ON	18,190
1645	50.0	1	ON	17,387
1700	50.0	1	ON	17,387
1715	42.0	1	ON	15,943
1730	40.0	1	ON	12,840
1745	39.0	1	ON	12,091
1800	44.0	1	ON	14,391
1815	46.0	1	ON	15,515
1830	48.0	1	ON	16,371
1845	49.0	1	ON	16,906

Date 5-5-80

Time	Peak Ht	Range	Condenser ON or OFF	
1900	53.0	1	ON	18,725
1915	54.0	1	ON	19,581
1930	51.0	1	ON	17,655
1945	45.0	1	ON	14,819
2000	42.0	1	ON	13,968
2015	32.0	1	ON	10,286
2030	26.0	1	ON	7,462
2045	22.0	1	ON	6,356
2100	19.0	1	ON	5,489
2115	17.0	1	ON	4,956
2130	20.0	1	ON	5,885
2145	27.0	1	ON	7,995
2200	27.0	1	ON	7,995
2215	27.0	1	ON	7,995
2230	27.0	1	ON	7,995

Date 5-5-80

Time	Peak Ht	Range	Condenser ON or OFF	
2245	26.0	1	ON	7,462
2300	26.0	1	ON	7,462
2315	27.0	1	ON	7,995
2330	26.0	1	ON	7,462
2345	25.0	1	ON	7,355
2400	25.0	1	ON	7,355

Date 5-6-80

Time	Peak Ht	Range	Condenser ON or OFF	
0015	28.0	1	ON	~~8,510~~
0030	27.0	1	ON	7,995
0045	27.0	1	ON	7,995
0100	60.0	3	ON	5,916 ~~27,470~~
0115	61.0	3	ON	4,074 ~~23,005~~
0130	58.0	3	ON	5,756 ~~21,400~~
0145				
0200				
0215				
0230				
0245				
0300	4.0	3	OFF	424 ~~1,845~~
0315	4.0	3	OFF	426 ~~1,845~~
0330	20.0	3	OFF	1845 ~~5,085~~
0345	9.0	1	OFF	2,558

Date 5-6-80

Time	Peak Ht	Range	Condenser ON or OFF	
0400	4.0	1	ON	1865
0415	92.0	1	OFF	45,305
0430	89.0	1	ON	42,640
0445	89.0	1	ON	42,640
0500	88.0	1	ON	41,893
0515	89.0	1	ON	41,041
0530	86.0	1	ON	39,975
0545				
0600	Dilution Changed to 1:17.1			
0615				
0630				
0645	93.0	1	ON	74,385
0700	93.0	1	ON	74,385
0715	93.0	1	ON	74,385
0730	95.0	1	ON	77,463

Date 5-6-80

Time	Peak Ht	Range 19.6 ×	Condenser ON or OFF	
0745	90.0	1	ON	84,672
0800	90.0	1	ON	84,672
0815	91.0	1	ON	81,144
0830	87.0	1	ON	75,460
0845	81.0	1	ON	65,660
0900	73.0	1	ON	55,468
0915	71.0	1	ON	52,920
0930	71.0	1	ON	52,920
0945	72.0	1	ON	53,900
1000	73.0	1	ON	55,468
1015	76.0	1	ON	59,388
1030	77.0	1	ON	60,760
1045	80.0	1	ON	64,680
1100	78.0	1	ON	62,230
1115	80.0	1	ON	64,680

Date _____

Time	Peak Ht	Range	Condenser ON or OFF	
1130	72.0	1	ON	53900
1145	60.0	1	ON	41,160
1200	54.0	1	ON	35,280
1215	51.0	1	ON	32,536
1230	50.0	1	ON	31,850
1245	52.0	1	ON	33,516
1300	48.0	1	ON	30,380
1315	40.0	1	ON	23,520
1330	33.0	1	ON	18,130
1345	25.0	1	ON	13,328
1400	20.0	1	ON	16,660
1415	44.0	3	ON	7,840
1430	34.0	3	ON	5,978
1445	33.0	3	ON	5,782
1500	31.0	3	ON	5,448

Date 5-6-80

Time	Peak Ht	Range	Condenser ON or OFF	
1515	20.0	3	ON	3,430
1530	17.0	3	ON	2,940
1545	14.0	3	ON	2,450
1600	11.0	3	ON	1,960
1615	10.0	3	ON	1,714
1630	8.0	3	ON	1,372
1645	8.0	3	ON	1,372
1700				

46 0780

K+E 10 X 10 TO THE INCH • 7 X 10 INCHES
KEUFFEL & ESSER CO. MADE IN U.S.A.

K+E 10 X 10 TO THE INCH • 7 X 10 INCHES
KEUFFEL & ESSER CO. MADE IN U.S.A.

46 0780

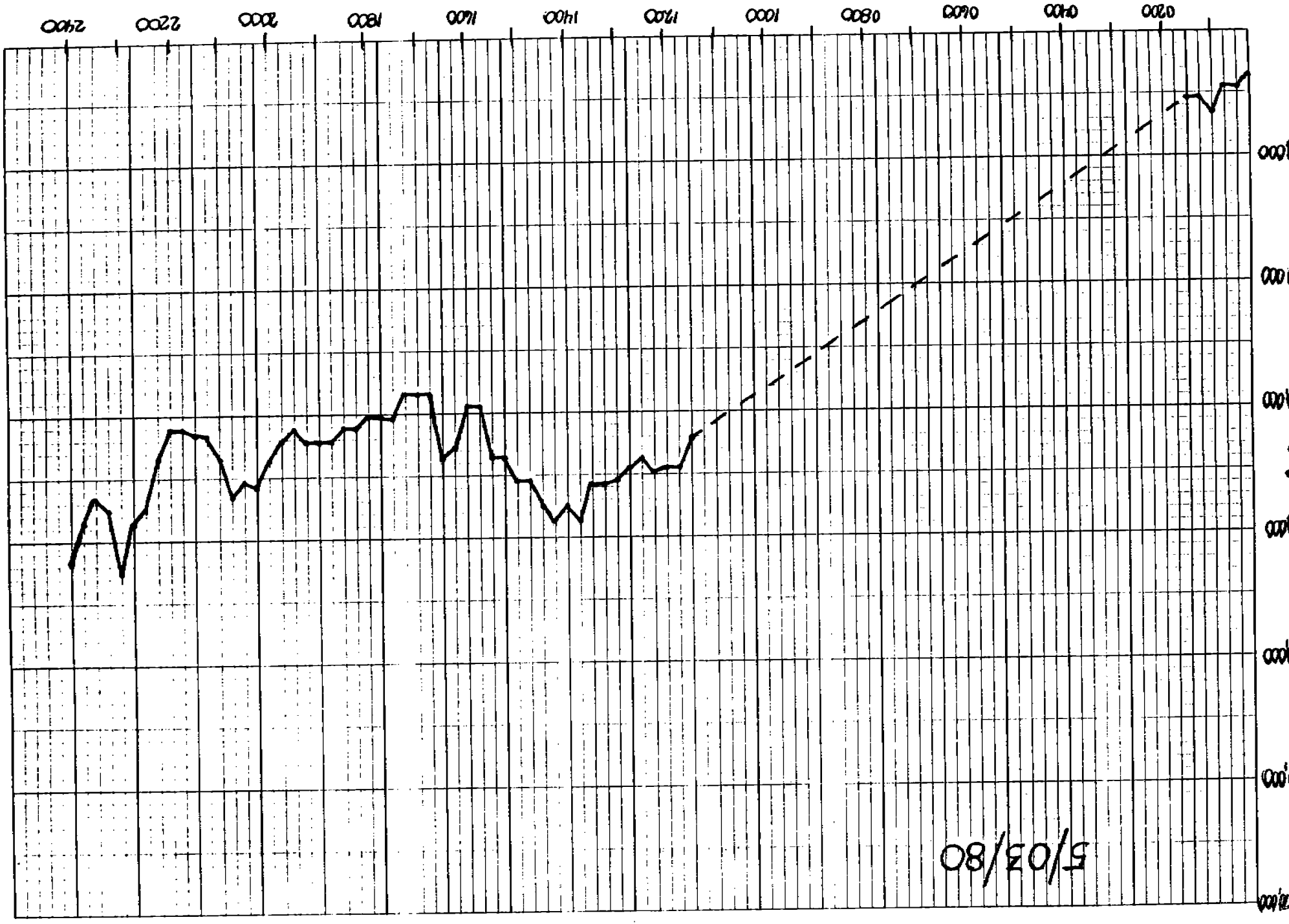

K+E 10 X 10 TO THE INCH • 7 X 10 INCHES
KEUFFEL & ESSER CO. MADE IN U.S.A.

46 0780

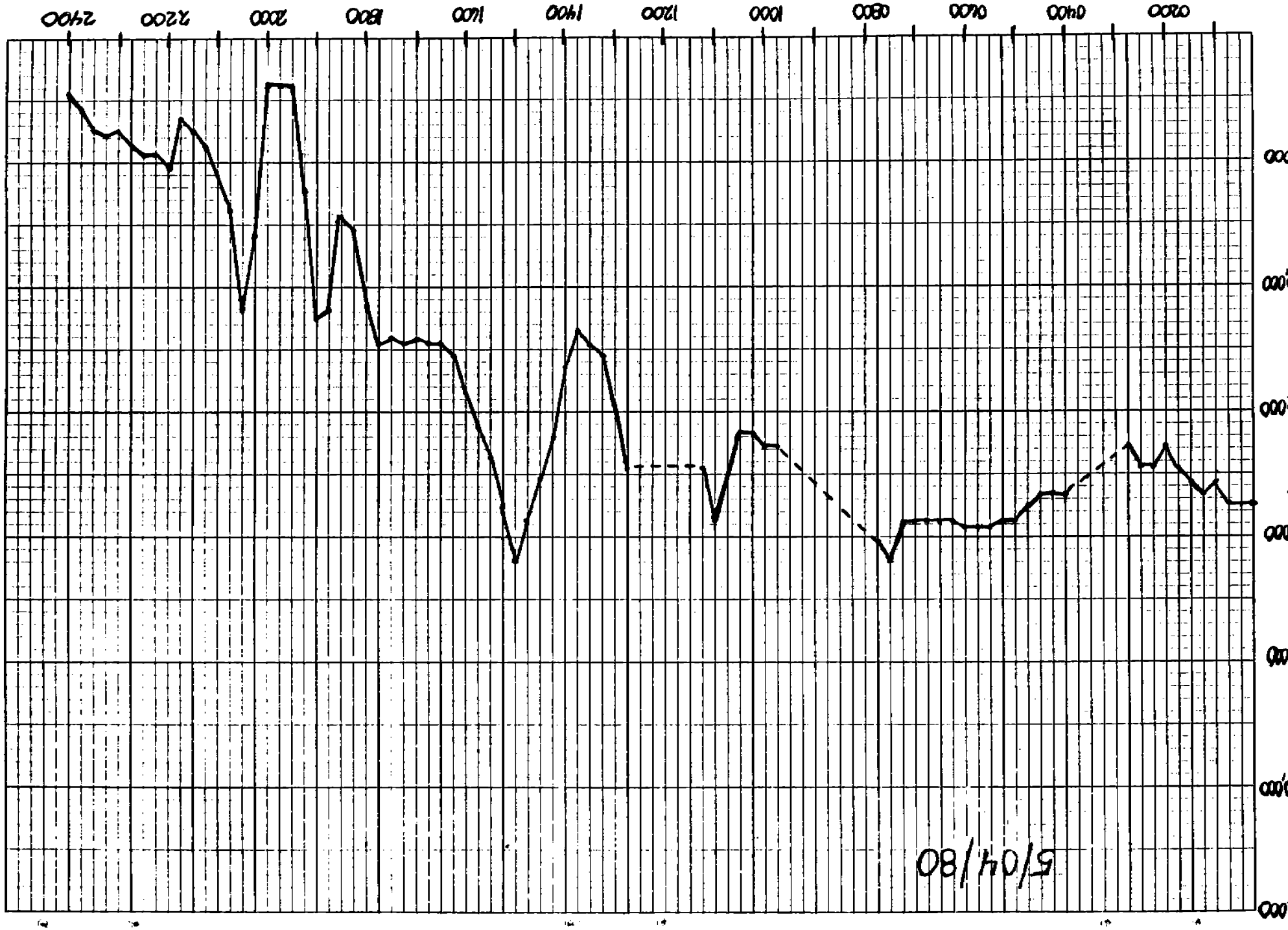

46 0780
K+E 10 X 10 TO THE INCH • 7 X 10 INCHES
KEUFFEL & ESSER CO. MADE IN U.S.A.

K+E 10 X 10 TO THE INCH • 7 X 10 INCHES
KEUFFEL & ESSER CO. MADE IN U.S.A.

46 0780

Time	Velocity (ft/sec)	Temp (°F) Stack	
1315	5.69	60	
1330	8.04	60	
1345	8.04	60	
1400	14.50	60	
1415	13.93	60	
1430	14.50	60	
1445	15.57	60	
1500	14.47	58	
1515	14.48	59	
1530	14.50	60	
1545	14.70	59	
1600	13.93	60	
1615	6.96	60	
1630	5.69	60	
1645	6.96	59	
1700	4.03	59	
1715	4.03	59	
1730	4.04	60	
1745	4.04	61	
1800	4.05	63	
1815	4.07	69	
1830	4.15	88	
1845	5.88	95	
1900	8.43	111	
1915	8.67	118°F	
1930	9.50	121	
1945	10.45	125	
~~1930~~			
2000	10.54	136	

Date 5/2/80

Barometeric Pressure
28.99

Time	Velocity	Temp Stack	
2015	10.54	136	
2030	10.54	136	
2045	11.11	141	
2100	11.12	143	
2115	11.47	144	
2130	11.48	146	
2145	11.49	147	
2200	11.50	148	
2215	11.51	149	
2230	11.52	150	
2245	12.03	151	
2300	12.36		
2315	12.19	153	
2330	12.36	154	
2345	12.36	154	
2400	12.21		

Date 5/2/80

Barometeric Pressure
28.99

Time	Velocity	Temp Stack	
0015	12.37	155	
0030	12.38	156	
0045	12.38	156	
0100	12.39	157	
0115	12.40	158	
0130	12.70	158	
0145	12.55	158	
0200	13.86	158	
0215	13.87	159	
0230	14.01	159	
0245	13.88	160	
0300	13.88	160	
0315	13.74	160	
0330	13.88	160	
0345	13.74	160	
0400	13.60	160	
0415	13.60	160	
0430	13.73	159	
0445	13.73	159	
0500	13.73	159	
0515	13.73	159	
0530	13.73	159	
0545	13.73	159	
0600	13.59	159	
0615	13.732	158	
0630	13.72	158	
0645	13.73	159	
0700	13.86	158	
0715	12.88	160	

Date 5/3/80

Barometeric Pressure
28.99

Time	Velocity	Temp Stack	
0730	12.88	160	
0745	13.33	161	
0800	13.32	160	
0815	13.33	161	
0830	13.32	160	
0845	13.33	161	
0900	13.32	160	
0915	13.17	160	
0930	13.32	160	
0945	13.32	160	
1000	13.32	160	
1015	13.32	160	
1030	13.46	160	
1045	13.31	159	
1100	13.16	159	
1115	12.74	161	
1130	13.33	161	
1145	13.18	161	
1200	13.33	161	
1215	13.77	162	
1230	13.63	162	
1245	12.90	162	
1300	12.74	161	
1315	12.58	161	
1330	12.44	162	
1345	12.43	161	
1400	12.43	161	
1415	12.43	161	
1430	12.43	161	

Date 5/3/80

Barometeric Pressure
28.99

Time	Velocity	Temp °F Stack	
1445	12.43	161	
1500	11.23	160	
1515	11.23	160	
1530	11.62	160	
1545	11.77	159	
1600	11.62	160	
1615	11.62	160	
1630	11.27	159	
1645	11.62	160	
1700	11.45	160	
1715	10.92	159	
1730	11.62	160	
1745	11.23	160	
1800	10.92	159	
1815	10.76	161	
1830	11.11	160	
1845	10.75	160	
1900	10.76	161	
1915	10.94	161	
1930	11.48	163	
1945	11.47	162	
2000	11.65	164	
2015	10.96	163	
2030	11.65	164	
2045	10.81	166	
2100	10.80	165	
2115	11.16	166	
2130	11.18	168	
2145	11.20	170	

Date 5/3/80

Barometeric Pressure

Time	Velocity	Temp Stack	
2200	11.21	171	
2215	11.18	168	
2230	11.16	166	
2245	10.82	168	
2300	10.82	168	
2315	10.81	166	
2330	10.79	164	
2345	10.82	168	
2400	9.71	172	

Date 5/03/80

Barometeric Pressure
28.99

Time	Velocity	Temp Stack	
0015	10.80	175	
0030	11.00	176	
0045	11.22	181	
0100	11.25	184	
0115	11.06	183	
0130	11.04	181	
0145	11.21	180	
0200	11.19	179	
0215	11.19	179	
0230	11.64	179	
0245	11.81	179	
0300	12.10	174	
0315	12.59	181	
0330	12.79	185	
0345	12.81	187	
0400	12.87	193	
0415	12.99	189	
0430	13.00	190	
0445	13.00	190	
0500	12.81	187	
0515	12.96	199	
0530	13.13	200	
0545	13.11	198	
0600	13.57	197	
0615	13.45	201	
0630	13.37	203	
0645	13.30	201	
0700	12.87	190	
0715	11.13	188	

Date 5/04/80

Barometeric Pressure
28.95

Time	Velocity ft/sec	Temp °F Stack	
0730	11.17	193	
0745	11.28	206	
0800	11.27	205	
0815	11.28	206	
0830	11.28	206	
0845	11.48	207	
0900	11.49	209	
0915	11.69	210	
0930	11.31	210	
0945	11.85	208	
1000	11.69	210	
1015	11.34	213	
1030	11.36	215	
1045	11.74	216	
1100	11.75	217	
1115	12.49	220	
1130	13.18	222	
1145	14.00	224	
1200	14.01	225	
1215	14.01	225	
1230	14.01	225	
1245	14.19	227	
1300	13.81	221	
1315	13.22	226	
1330	13.24	228	
1345	12.89	227	
1400	12.36	225	
1415	12.36	225	
1430	12.38	228	

Date 5/04/80

Barometeric Pressure
28.95

Time	Velocity	Temp Stack	
1445	12.65	228	
1500	11.51	223	
1515	11.25	216	
1530	10.63	213	
1545	10.59	208	
1600	10.40	209	
1615	10.40	210	
1630	10.38	207	
1645	10.37	206	
1700	10.36	204	
1715	10.33	200	
1730	10.3 ~~9.95~~	~~198~~ 204	
1745	9.45	198	
1800	9.46	199	
1815	11.15	203	
1830	10.41	211	
1845	11.65	217	
1900	11.69	222	
1915	12.29	227	
1930	9.34	215	
1945	8.32	209	
2000	8.29	204	
2015	8.27	201	
2030	8.01	202	
2045	8.01	202	
2100	8.01	202	
2115	7.99	199	
2130	8.00	201	
2145	6.85	201	

Date 5/04/80

Barometeric Pressure
29.05

Time	Velocity	Temp Stack	
.0015	7.73	195	
0030	7.69	187	
0045	7.50	200	
0100	7.75	198	
0115	8.01	199	
0130	7.77	199	
0145	7.70	190	
0200	7.77	202	
0215	9.00	205	
0230	9.03	210	
0245	8.80	210	
0300	7.82	210	
0315	8.08	211	
0330	9.95	207	
0345	9.46	209	
0400	9.48	211	
0415	9.47	210	
0430	9.45	207	
0445	9.51	215	
0500	9.25	209	
0515	9.23	207	
0530	9.29	215	
0545	9.74	218	
0600	9.73	217	
0615	11.60	231	
0630	11.42	232	
0645	12.17	235	
0700	12.22	241	
0715	13.13	248	

Date 5/05/80

Barometeric Pressure
28.90

Time	Velocity ft/sec	°F Temp Stack	
2200	6.53	200	
2215	6.52	198	
2230	7.15	200	
2245	7.99	198	
2300	7.96	194	
2315	7.88	180	
2330	7.83	172	
2345	7.81	170	
2400	7.95	192	

Date 5/04/80

Barometeric Pressure
29.05

Time	Velocity	Temp Stack	
1435	13.26	291	
1500	12.73	292	
1515	12.72	291	
1530	12.93	294	
1545	12.94	295	
1600	12.95	296	
1615	12.96	297	
1630	12.96	298	
1645	12.98	300	
1700	11.81	295	
1715	12.77	296	
1730	11.88	295	
1745	11.89	297	
1800	12.28	298	
1815	11.72	300	
1830	12.32	303	
1845	12.86	302	
1900	12.49	302	
1915	12.14	304	
1930	12.53	306	
1945	12.54	308	
2000	12.73	309	
2015	12.58	312	
2030	12.79	316	
2045	12.81	318	
2100	13.70	319	
2115	13.72	321	
2130	13.20	321	
2145	13.74	323	

Date _____

Barometeric Pressure
28.80

Time	Velocity ft/sec	°F Temp Stack	
0730	13.20	248	
0745	13.20	248	
0800	12.40	253	
0815	11.48	253	
0830	11.48	253	
0845	10.88	252	
0900	10.88	252	
0915	10.88	253	
0930	10.71	256	
0945	11.54	261	
1000	11.57	264	
1015	10.97	263	
1030	10.57	265	
1045	10.60	269	
1100	11.64	273	
1115	12.60	277	
1130	12.41	276	
1145	12.60	276	
1200	12.63	280	
1215	12.63	280	
1230	12.64	281	
1245	12.64	281	
1300	12.65	282	
1315	12.69	287	
1330	13.06	288	
1345	13.58	288	
1400	13.25	290	
1415	12.90	290	
1430	13.08	291	

Date 5/05/80

Barometeric Pressure
28.90

Time	Velocity	Temp Stack	
2200	13.76	326	
2215	13.61	328	
2230	13.78	328	
2245	13.96	329	
2300	13.78	328	
2315	13.79	329	
2330	13.97	330	
2345	14.84	352	
2400	14.31	369	

Date 5/05/80

Barometeric Pressure
28.90

Time	Velocity	Temp Stack	
0015	14.53	416	
0030	14.35	416	
0045	14.37	419	
0100	14.24	426	
0115	13.86	426	
0130	13.84	423	
0145	14.37	445	
0200	14.63	428	
0215	14.81	428	
0230	14.09	430	
0245	14.91	440	
0300	14.72	439	
0315	14.41	447	
0330	14.77	468	
0345	14.69	458	
0400	13.23	448	
0415	13.65	450	
0430			
0445			
0500			
0515	15.05	480	
0530	15.43	481	
0545	15.50	489	
0600	15.87	490	
0615	16.03	488	
0630	15.04	456	
0645	15.15	447	
0700	14.53	439	
0715	13.70	430	

Date 5/06/80

Barometeric Pressure
28.90

Time	Velocity	Temp °F Stack	
0730	12.85	424	
0745	12.17	418	
0800	11.45	411	
0815	10.99	412	
0830	11.02	416	
0845	11.02	416	
0900	11.53	423	
0915	10.32	423	
0930	11.56	427	
0945	11.49	417	
1000	10.21	405	
1015	8.79	395	
1030	9.30	384	
1045	8.42	380	
1100	8.39	375	
1115	8.62	366	
1130	7.04	363	
1145	7.03	360	
1200	7.02	359	
1215	8.62	362	
1230	10.04	377	
1245	8.10	377	
1300	9.28	380	
1315	7.77	376	
1330	7.74	369	
1345	6.62	368	
1400	5.36	335	
1415	5.30	317	
1430	5.72	315	

Date 5/06/80

Barometeric Pressure
28.90

Time	Velocity	°F Temp Stack	
1445	5.25	303	
1500	6.86	372	
1515	4.93	346	
1530	4.40	344	
1545	4.92	343	
1600	4.92	344	
1615	3.09	333	
1630	2.16	312	
1645	0	200	

Date 5/06/80

Barometeric Pressure
28.90

K+E 10 X 10 TO THE INCH • 7 X 10 INCHES KEUFFEL & ESSER CO. MADE IN U.S.A.

46 0780

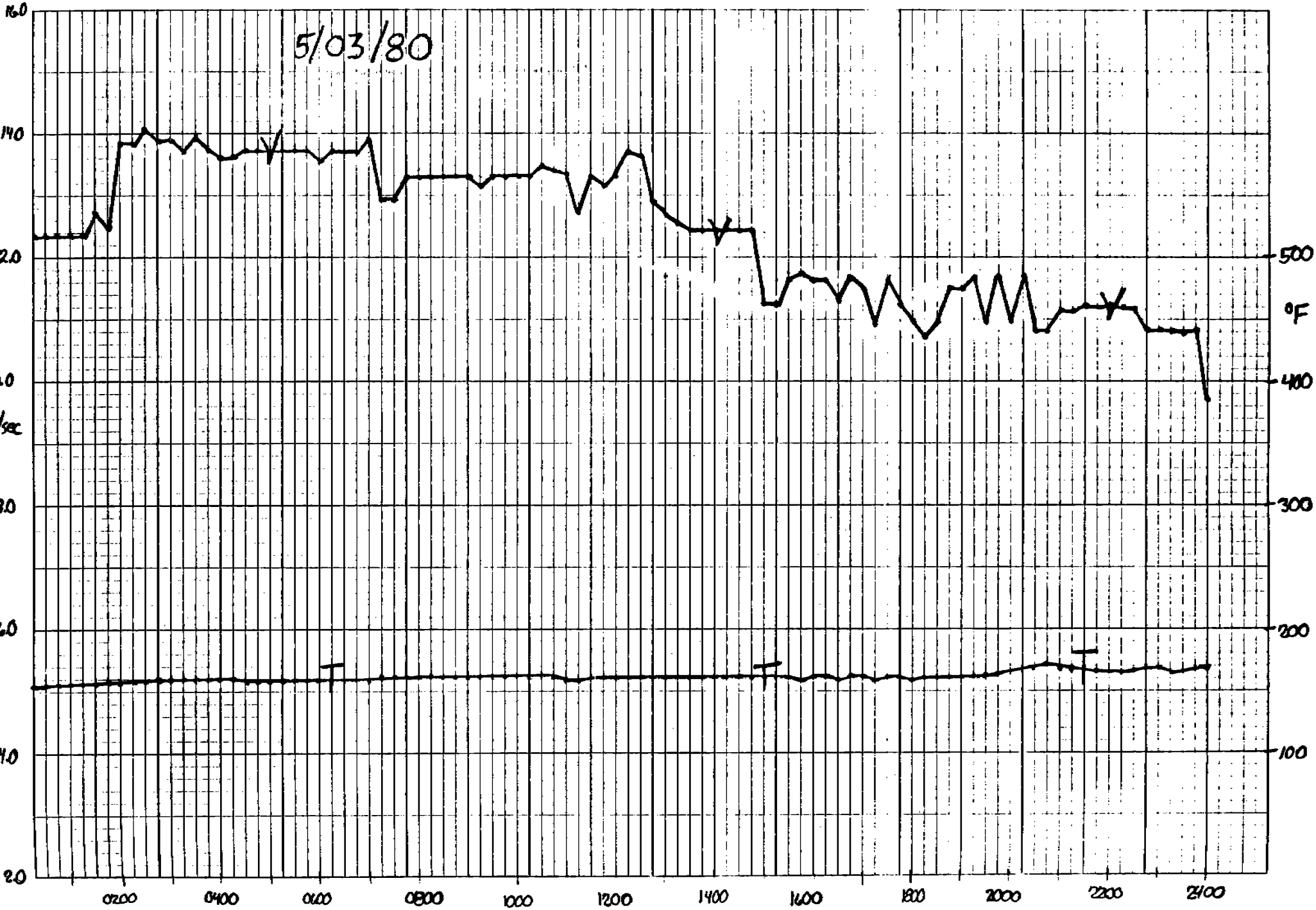

46 0780
K+E 10 X 10 TO THE INCH • 7 X 10 INCHES
KEUFFEL & ESSER CO. MADE IN U.S.A.

K+E 10 X 10 TO THE INCH • 7 X 10 INCHES
KEUFFEL & ESSER CO. MADE IN U.S.A.

46 0780

10 X 10 TO THE INCH • 7 X 10 INCHES
KEUFFEL & ESSER CO. MADE IN U.S.A.

46 0780

K+E 10 X 10 TO THE INCH • 7 X 10 INCHES
KEUFFEL & ESSER CO. MADE IN U.S.A.
46 0780

APPENDIX B

PROJECT PARTICIPANTS

PROJECT PARTICIPANTS

ENVIRONMENTAL PROTECTION AGENCY

Frank Clay	Project Officer Emission Measurement Branch

MIDWEST RESEARCH INSTITUTE

Bill Maxwell	Research Engineer
Bill Terry	Research Engineer

MONSANTO RESEARCH CORPORATION

George L. Ball	Contract Manager
Daryl DeAngelis	Field Sampling Unit Leader
James A. Peters	Industry Principal Investigator
Mark T. Thalman	Team Leader, Day Shift
Bruce Kreischer	Co-op Student, Day Shift
Windle H. McDonald	Research Technician, Evening Shift Leader
Charlie M. Clark	Research Technician, Evening Shift
Charles F. Duncan	Sr. Research Technician, Night Shift Leader
Mark Perry	Co-op Student, Night Shift

$$E(\text{lb/hr}) = Q\,\frac{ft^3}{min} \times C\,(\text{frac})\,\frac{MW\ lb}{lb\text{-}mole}\,(1 - \%H_2O/100)$$

$$= Q\,\frac{ft^3}{min} \times \frac{528}{T+460} \cdot \left(1 - \frac{\%H_2O}{100}\right) \cdot \frac{MW\ lb}{lb\text{-}mole} \cdot \frac{1\ lb\text{-}mole}{385\ ft^3}$$

Date	CO (MW = 28) %	CO (MW = 28) lb/d	CO_2 (MW = 44) %	CO_2 (MW = 44) lb/d
5/3/80	3.5	5210	9.5	22,200
5/4/80	2.5	2760	11.0	19,100
5/5/80	1.4	1580	16.2	28,700

9550 lb/batch

100 tons

95.5 lb/ton

96

48 kg/Mg

(106 - 87) lb

53 - 43.5 kg

70,000 lb/batch

700 lb/ton

350 kg/Mg

90 - 110 tons per batch

avg = 100 tons

(778 - 636) lb

389 - 315 kg

5/3/80	Avg ACFM	2629.679	→	2630
5/4/80	"	2379.395	→	2380
5/5/80	"	2358.775	→	2360

get avg moisture % ea. day

get avg. temp ea. day

5/3/80	Avg moisture %	=	36.55 %
5/4/80	"	=	44.4 %
5/5/80	"	=	38.7 %

5/3/80	Avg. EXH. GAS TEMP	≈	160° F
5/4/80		:	200° F
5/5/80		:	250° F

	% CO	% CO_2
5/3/80	3.5	9.5
5/4/80	2.5	11.0
5/5/80	1.4	16.2