Note: This is a reference cited in *AP 42, Compilation of Air Pollutant Emission Factors, Volume I Stationary Point and Area Sources.* AP42 is located on the EPA web site at www.epa.gov/ttn/chief/ap42/

The file name refers to the reference number, the AP42 chapter and section. The file name "ref02_c01s02.pdf" would mean the reference is from AP42 chapter 1 section 2. The reference may be from a previous version of the section and no longer cited. The primary source should always be checked.

PM10 Emissions Sampling
Kirby Forest Products, Silsbee, TX
March 2 - 5, 1992
Armstrong Environmental Inc.
Project W-1159-92

Report Prepared For:
Dr. James Boswell
Louisiana-Pacific Corporation
PO Box 3107
Conroe, TX 77305

Report Prepared March 16, 1992 By:
Armstrong Environmental Inc.
4747 Irving Blvd. #204
Dallas, Texas 75247
(214) 631-0021

TABLE OF CONTENTS

	Page
I. INTRODUCTION	1
II. SUMMARY	2 - 7
III. PROCEDURES	8
IV. APPENDICES	
A - CALCULATION SUMMARIES	9 - 61
B - ANALYTICAL SUMMARIES	62 - 92
C - FIELD DATA SHEETS	93 - 107
D - EQUIPMENT CALIBRATIONS	108 - 134
E - CHAIN OF CUSTODY RECORDS	135 - 142

I. INTRODUCTION

A series of tests were performed on the exhaust stacks associated with Dryers #1 - #5 at the Kirby Forest Products facility in Silsbee, TX on March 2 - 5, 1992.

The purpose of this test series was to determine the exhaust emission rate of PM-10 in terms of lbs/hr.

Sampling was performed following procedures detailed in Title 40: Code of Federal Regulations (40:CFR).

Sampling was performed by Tom Armstrong, Larry Whicher, Joe Barrera, Jerry Salinas, Mark Peterson, and Danny Barrera of Armstrong Environmental, Inc. using two NAPP Model 31 Method 5 sampling trains and two Anderson PM10 instack cyclones.

Dryer #4 and 5 were sampled on March 2, Dryer #3 on March 3, and Dryer #1 and 2 on March 5. Three two hour test repetitions were performed on each source, and sampling was performed over an eight hour period each day.

Submitted by:
Armstrong Environmental, Inc.

Tom Armstrong (os)

Tom Armstrong
President

TA/os

II. SUMMARY

A series of tests were performed on the exhaust stacks associated with Dryers #1 - #5 on March 2 - 5, 1992 at the Kirby Forest Products facility in Silsbee, TX.

Testing was conducted following procedures detailed in 40:CFR, Parts 51 and 60.

The results of this test series are summarized in Tables 1 - 5 for Dryers #1 - #5, respectively.

Results indicate the following PM10 emission rates:

FRONT HALF ONLY

Repetition	1	2	3
Dryer #1 - 3/5/92	17.42	18.44	17.83
Dryer #2 - 3/5/92	17.16	14.51	11.97
Dryer #3 - 3/3/92	15.41	13.89	14.41
Dryer #4 - 3/2/92	16.39	18.23	17.97
Dryer #5 - 3/2/92	14.95	15.28	16.72

Based on the results of this test series the following comments can be made:

1. At the tests conclusion on Dryer #5, some nozzle damage was noted. Nozzle was reamed and recalibrated on March 3 for Dryer #3.

2. A test series was performed on Dryers #2 and #3 on February 26 and 27, 1992. Due to questions concerning clean-up and sample storage, these runs were rejected and rerun the following week.

SUMMARY OF PM10 EMISSIONS DATA

TABLE: 1
PLANT: Kirby Forest Products, Silsbee, TX
LOCATION: Dryer #1 Exhaust
OPERATOR: Jerry Salinas
TEST DATE: March 5, 1992

REPETITION:	1	2	3
STACK GAS			
Temperature, F	183.5	182.5	181.9
Velocity, fps	80.28	81.85	82.03
Volume Flow, acfm	45244	46131	46233
scfm	31164	32037	31894
scfh	1869819	1922224	1913653
Moisture, %	16.37	15.80	16.43
CO2, %	2.0	2.0	2.0
O2, %	18.0	18.0	18.0
SAMPLE			
Start Time, hrs:min	9:49am	12:16pm	2:46pm
Finish Time, hrs:min	11:18am	2:26pm	4:54pm
Volume, scf	44.351	45.399	45.791
Isokinetic Ratio, %	111.60	108.71	110.13
Cyclone Flow, acfm	0.5185	0.5149	0.5228
Cutpoint, D50	10.05	10.09	9.97
Minimum Delta P	1.14	1.13	1.16
Maximum Delta P	2.71	2.69	2.77
Number of Points Outside range	0	0	0
PM10 **CYCLONE CATCH**			
Sample Weight, mg	6.4	5.85	6.05
Concentration, gr/scf	0.0022	0.0020	0.0020
Emissions, lbs/hr	0.595	0.546	0.557
+ FRONT **PM10**			
Sample Weight, mg	187.4	182.5	193.4
Concentration, gr/scf	0.0652	0.0672	0.0652
Emissions, lbs/hr	17.42	18.44	17.83
	2.2	2.3	2.3
BACK **IMPINGERS**			
Sample Weight, mg	14.4	6.4	10.1
Concentration, gr/scf	0.0050	0.0022	0.0034
Emissions, lbs/hr	1.339	0.597	0.931
	0.17	0.076	0.12

= 2.3 lb/ton

= 0.12 lb/ton

7.9 TON/HR PROC. RATE

2.4 lb/ton

TOTAL CONDENSIBLE PM

NO INFO TO BREAK OUT ORG. & INORG.

SUMMARY OF PM10 EMISSIONS DATA

TABLE: 2
PLANT: Kirby Forest Products, Silsbee, TX
LOCATION: Dryer #2 Exhaust
OPERATOR: Mark Peterson
TEST DATE: March 5, 1992

REPETITION:	1	2	3
STACK GAS			
Temperature, F	177.8	176.9	174.5
Velocity, fps	78.98	81.19	81.07
Volume Flow, acfm	44516	45759	45690
scfm	31196	31786	32375
scfh	1871737	1907150	1942474
Moisture, %	15.66	16.51	15.16
CO2, %	2.0	2.0	2.0
O2, %	18.5	19.0	19.0
SAMPLE			
Start Time, hrs:min	9:22am	11:51am	2:12pm
Finish Time, hrs:min	11:24am	1:50pm	4:15pm
Volume, scf	46.352	44.042	44.007
Isokinetic Ratio, %	111.83	105.95	103.6
Cyclone Flow, acfm	0.5425	0.5283	0.5157
Cutpoint, D50	9.69	9.85	10.01
Minimum Delta P	1.11	1.05	1.01
Maximum Delta P	2.67	2.52	2.42
Number of Points Outside range	0	0	0
CYCLONE CATCH			
Sample Weight, mg	7.65	9.15	5.40
Concentration, gr/scf	0.0027	0.0032	0.0019
Emissions, lbs/hr	0.711	0.873	0.525
PM10			
Sample Weight, mg	184.435	152.04	123.05
Concentration, gr/scf	0.0641	0.0533	0.0431
Emissions, lbs/hr	17.16	14.51	11.97
	2.2	1.8	1.5
IMPINGERS			
Sample Weight, mg	5.85	3.30	3.00
Concentration, gr/scf	0.0020	0.0012	0.0011
Emissions, lbs/hr	0.544	0.315	0.292
	0.069	0.040	0.037 = 0.049 lb/hr
	2.3	1.8	1.5

SUMMARY OF PM10 EMISSIONS DATA

TABLE: 3
PLANT: Kirby Forest Products, Silsbee, TX
LOCATION: Dryer #3 Exhaust
OPERATOR: Jerry Salinas
TEST DATE: March 3, 1992

REPETITION:	1	2	3
STACK GAS			
Temperature, F	173.8	172.7	172.7
Velocity, fps	76.91	77.21	78.07
Volume Flow, acfm	43346	43509	44002
scfm	30721	30507	31243
scfh	1843270	1830401	1886559
Moisture, %	15.99	17.03	15.44
CO2, %	1.0	1.5	1.0
O2, %	20.0	19.5	19.0
SAMPLE			
Start Time, hrs:min	9:10am	11:37am	2:10pm
Finish Time, hrs:min	11:14am	1:45pm	3:27pm
Volume, scf	43.619	43.622	43.596
Isokinetic Ratio, %	107.38	107.21	104.10
Cyclone Flow, acfm	0.5069	0.5083	0.4997
Cutpoint, D50	10.12	10.05	10.22
Minimum Delta P	0.98	0.99	0.95
Maximum Delta P	2.35	2.36	2.26
Number of Points Outside range	1	1	1
CYCLONE CATCH			
Sample Weight, mg	34.25	22.15	18.35
Concentration, gr/scf	0.0121	0.0078	0.0065
Emissions, lbs/hr	3.19	2.05	1.75
PM10			
Sample Weight, mg	165.44	150.195	150.99
Concentration, gr/scf	0.0585	0.0531	0.0534
Emissions, lbs/hr	15.41	13.89	14.41
	2.0	1.8	1.8
IMPINGERS			
Sample Weight, mg	6.2	4.5	4.45
Concentration, gr/scf	0.0022	0.0016	0.0016
Emissions, lbs/hr	0.578	0.416	0.424
	0.073	0.053	0.054 = 0.060 lb/ton
	2.1	1.9	1.9
			2.0

SUMMARY OF PM10 EMISSIONS DATA

TABLE: 4
PLANT: Kirby Forest Products, Silsbee, TX
LOCATION: Dryer #4 Exhaust
OPERATOR: Jerry Salinas
TEST DATE: March 2, 1992

REPETITION:	1	2	3
STACK GAS			
Temperature, F	169.4	169.1	167.9
Velocity, fps	82.50	77.67	84.15
Volume Flow, acfm	46495	43778	47429
scfm	33141	31622	33647
scfh	1988489	1897337	2018799
Moisture, %	16.37	15.29	16.97
CO2, %	2.0	1.0	1.5
O2, %	19.5	19.0	19.0
SAMPLE			
Start Time, hrs:min	10:54am	2:25pm	4:50pm
Finish Time, hrs:min	1:11pm	4:23pm	6:53pm
Volume, scf	44.811	38.709	42.536
Isokinetic Ratio, %	103.42	108.31	102.62
Cyclone Flow, acfm	0.4935	0.4869	0.4998
Cutpoint, D50	10.22	10.33	10.09
Minimum Delta P	1.07	1.03	1.09
Maximum Delta P	2.55	2.47	2.61
Number of Points Outside range	1	1	1
CYCLONE CATCH			
Sample Weight, mg	18.45	8.8	19.15
Concentration, gr/scf	0.0064	0.0035	0.0069
Emissions, lbs/hr	1.81	0.951	2.00
PM10			
Sample Weight, mg	167.6	168.675	171.74
Concentration, gr/scf	0.0577	0.0672	0.0623
Emissions, lbs/hr	16.39	18.23	17.97
	2.1	2.3	2.3
IMPINGERS			
Sample Weight, mg	7.6	7.5	8.6
Concentration, gr/scf	0.0026	0.0030	0.0031
Emissions, lbs/hr	0.743	0.811	0.900
	0.094	0.10	0.11
	2.2	2.4	2.4

= 0.10 lb/ton

2.3

SUMMARY OF PM10 EMISSIONS DATA

TABLE: 5
PLANT: Kirby Forest Products, Silsbee, TX
LOCATION: Dryer #5 Exhaust
OPERATOR: Larry Whicher
TEST DATE: March 2, 1992

REPETITION:	1	2	3	
STACK GAS				
Temperature, F	163.4	164.5	161.8	
Velocity, fps	80.45	80.39	79.78	
Volume Flow, acfm	45340	45308	44962	
scfm	32810	32903	33032	
scfh	1968607	1974164	1981939	
Moisture, %	15.63	15.18	14.56	
CO2, %	1.5	1.0	1.5	
O2, %	19.5	19.0	19.0	
SAMPLE				
Start Time, hrs:min	9:45am	1:31pm	4:38pm	
Finish Time, hrs:min	12:00pm	3:35pm	6:40pm	
Volume, scf	39.299	38.963	39.528	
Isokinetic Ratio, %	102.57	100.09	102.07	
Cyclone Flow, acfm	0.4555	0.4428	0.4481	
Cutpoint, D50	10.76	11.00	10.87	
Minimum Delta P	1.01	0.95	0.98	
Maximum Delta P	2.41	2.27	2.35	
Number of Points Outside range	1	1	1	
CYCLONE CATCH				
Sample Weight, mg	28.2	15.6	24.85	
Concentration, gr/scf	0.0111	0.0062	0.0097	
Emissions, lbs/hr	3.11	1.74	2.75	
PM10				
Sample Weight, mg	135.38	136.76	151.29	
Concentration, gr/scf	0.0532	0.0542	0.0591	
Emissions, lbs/hr	14.95	15.28	16.72	
	1.9	1.9	2.1	
IMPINGERS				
Sample Weight, mg	5.6	4.5	3.45	
Concentration, gr/scf	0.0022	0.0018	0.0014	
Emissions, lbs/hr	0.618	0.502	0.381	
	0.078	0.064	0.048	= 0.063 lb/ton
	2.0	2.0	2.1	
				2.0

III. PROCEDURES

The procedure for emissions sampling followed USEPA test methods as detailed in Title 40: Code of Federal Regulations. The following methods were used from Part 60, Appendix A;

Method	Title
1	Sample and Velocity Traverses from Stationary Sources
2	Determination of Stack Gas Velocity and Volumetric Flow (Type S Pitot)
3	Gas Analysis for CO_2, O_2, Excess Air and Dry Molecular Weight
4	Determination of Moisture Content in Stack Gases
5	Determination of Particulate Emissions from Stationary Sources

The following procedures were used from Part 51, Appendix M:

201A	Determination of PM10 Emissions (Constant Sampling Rate Procedure)

CO_2 and O_2 were determined using a Fyrite Analyzer ?? QUALITY ??

Sampling was performed using two Napp Model 31 sampling trains equipped with two Anderson Samplers stainless steel instack cyclones. The train was modified slightly from that required in 201A by eliminating the instack filter and using the heated filter from the Method 5 sampling train.

(*) METHOD 5 FILTER TEMP

Nozzle #1 (nominal .136 inch diameter) was used on all stacks. Specific nozzle sizes are listed in the field data sheets in Appendix C.

Sampling was targeted for 5.0 minutes at each of 24 points making a total run duration target of 120 minutes. Run lengths varied between 109 minutes and 127 minutes.

Sample clean-up and recovery took place at ground level in a van. Chain of custody forms were maintained thoughout, samples being recovered by either Tom Armstrong or Joe Barrera. Samples were stored in the back of the van, transported to Dallas in the same, and analyzed by Joe Barrera March 6, 7 and 8.

APPENDIX A

Kirby
Dryer #1
3/5/92
Repetition 1

CUTPOINT, D50 = 10.05222

CYCLONE FLOW, CU FT/MIN = .5185462

NOZZLE VELOCITY, FT/SEC = 89.58546

MINIMUM NOZZLE VELOCITY, FT/SEC = 67.99565

MAXIMUM NOZZLE VELOCITY, FT/SEC = 104.8564

MINIMUM DELTA P = 1.142784

MAXIMUM DELTA P = 2.717639

Kirby
Dryer #1
3/5/92
Repetition # 1

SAMPLE VOLUME, STANDARD CUBIC FEET
(((H/13.6) / TM) * Y * VM * 17.64 = 44.3514

VOLUME OF WATER VAPOR, STANDARD CUBIC FEET
VLC * 0.04707 = 8.679708

FRACTIONAL MOISTURE CONTENT
VWSTD / (VMSTD + VWSTD) = .163672

PARTICULATE CONCENTRATION, GR/SCF DB
(MN/VMSTD) * 0.01543 = 0

PARTICULATE CONCENTRATION, LBS/SCF DB
(MN/VMSTD) * 2.205^-06 = 0

MOLECULAR WEIGHT OF STACK GAS, DRY BASIS
(CO2 * .44) + (O2 * .32) + ((N2 + CO) * .28) = 29.04

MOLECULAR WEIGHT OF STACK GAS, WET BASIS
(MD * (1 - BWS)) + (18 * BWS) = 27.23306

STACK PRESSURE, INCHES OF MERCURY
(SP / 13.6) + PBAR = 30.11088

STACK GAS VELOCITY, FPS
(SQR(((TS + 460) / MS) / PS)) * CP * DP * 85.49 = 80.28028

STACK GAS VOLUME, ACFM
V * AS * 60 = 45244.36

STACK GAS VOLUME, SCFH
(((528*PBAR)/(TS+460)/29.92)) *AS*V*(1-BWS) * 3600 = 1869819

PARTICULATE EMISSIONS, LBS/HR
CS * QS = 0

ISOKINETIC RATIO, %
((VMSTD/17.64)+(.002669*VLC))/AN/V/PS/T*(TS+460)*1.667 = 111.6018

Kirby
Dryer #1
3/5/92
Repetition # 1

PRESSURE DROP ACROSS ORIFICE, H = .48
METER CO-EFFICIENT, Y = .9689
METER TEMPERATURE, TM = 97.3125
BAROMETRIC PRESSURE, PBAR = 30.03
GAS METER VOLUME, VM = 48.102
LIQUID COLLECTED, VLC = 184.4
PARTICULATE SAMPLE WEIGHT, MN = 0
STATIC PRESSURE, SP = 1.1
STACK TEMPERATURE, TS = 183.4583
PITOT CO-EFFICIENT, CP = .84
SQUARE ROOT OF DELTA P, DP = 1.262014
AREA OF STACK, AS = 9.392999
TEST DURATION, T = 123.9
AREA OF NOZZLE, AN = 9.647846E-05
CO2 % = 2
O2 % = 18
CO % = 0

Kirby
Dryer #1
3/5/92
Repetition 2

CUTPOINT, D50 = 10.09991

CYCLONE FLOW, CU FT/MIN = .5149572

NOZZLE VELOCITY, FT/SEC = 88.96541

MINIMUM NOZZLE VELOCITY, FT/SEC = 67.49575

MAXIMUM NOZZLE VELOCITY, FT/SEC = 104.1099

MINIMUM DELTA P = 1.129942

MAXIMUM DELTA P = 2.688359

Kirby Forest Products
Dryer #1
3/5/92
Repetition # 2

PRESSURE DROP ACROSS ORIFICE, H = .48
METER CO-EFFICIENT, Y = .9689
METER TEMPERATURE, TM = 96.75
BAROMETRIC PRESSURE, PBAR = 30.03
GAS METER VOLUME, VM = 49.189
LIQUID COLLECTED, VLC = 181
PARTICULATE SAMPLE WEIGHT, MN = 0
STATIC PRESSURE, SP = .95
STACK TEMPERATURE, TS = 182.5
PITOT CO-EFFICIENT, CP = .84
SQUARE ROOT OF DELTA P, DP = 1.288939
AREA OF STACK, AS = 9.392999
TEST DURATION, T = 126.7
AREA OF NOZZLE, AN = 9.647846E-05
CO2 % = 2
O2 % = 18
CO % = 0

Kirby Forest Products
Dryer #1
3/5/92
Repetition # 2

SAMPLE VOLUME, STANDARD CUBIC FEET
(((H/13.6) / TM) * Y * VM * 17.64 = 45.39947

VOLUME OF WATER VAPOR, STANDARD CUBIC FEET
VLC * 0.04707 = 8.519671

FRACTIONAL MOISTURE CONTENT
VWSTD / (VMSTD + VWSTD) = .1580083

PARTICULATE CONCENTRATION, GR/SCF DB
(MN/VMSTD) * 0.01543 = 0

PARTICULATE CONCENTRATION, LBS/SCF DB
(MN/VMSTD) * 2.205^-06 = 0

MOLECULAR WEIGHT OF STACK GAS, DRY BASIS
(CO2 * .44) + (O2 * .32) + ((N2 + CO) * .28) = 29.04

MOLECULAR WEIGHT OF STACK GAS, WET BASIS
(MD * (1 - BWS)) + (18 * BWS) = 27.29559

STACK PRESSURE, INCHES OF MERCURY
(SP / 13.6) + PBAR = 30.09985

STACK GAS VELOCITY, FPS
(SQR(((TS + 460) / MS) / PS)) * CP * DP * 85.49 = 81.85306

STACK GAS VOLUME, ACFM
V * AS * 60 = 46130.75

STACK GAS VOLUME, SCFH
(((528*PBAR)/(TS+460)/29.92)) *AS*V*(1-BWS) * 3600 = 1922224

PARTICULATE EMISSIONS, LBS/HR
CS * QS = 0

ISOKINETIC RATIO, %
((VMSTD/17.64)+(.002669*VLC))/AN/V/PS/T*(TS+460)*1.667 = 108.7084

Kirby
Dryer #1
3/5/92
Repetition 3

CUTPOINT, D50 = 9.972678

CYCLONE FLOW, CU FT/MIN = .5228284

NOZZLE VELOCITY, FT/SEC = 90.32525

MINIMUM NOZZLE VELOCITY, FT/SEC = 68.59787

MAXIMUM NOZZLE VELOCITY, FT/SEC = 105.7511

MINIMUM DELTA P = 1.165301

MAXIMUM DELTA P = 2.769408

Kirby
Dryer #1
3/5/92
Repetition # 3

SAMPLE VOLUME, STANDARD CUBIC FEET
(((H/13.6) / TM) * Y * VM * 17.64 = 45.79186

VOLUME OF WATER VAPOR, STANDARD CUBIC FEET
VLC * 0.04707 = 9.004491

FRACTIONAL MOISTURE CONTENT
VWSTD / (VMSTD + VWSTD) = .1643265

PARTICULATE CONCENTRATION, GR/SCF DB
(MN/VMSTD) * 0.01543 = 0

PARTICULATE CONCENTRATION, LBS/SCF DB
(MN/VMSTD) * 2.205^-06 = 0

MOLECULAR WEIGHT OF STACK GAS, DRY BASIS
(CO2 * .44) + (O2 * .32) + ((N2 + CO) * .28) = 29.04

MOLECULAR WEIGHT OF STACK GAS, WET BASIS
(MD * (1 - BWS)) + (18 * BWS) = 27.22584

STACK PRESSURE, INCHES OF MERCURY
(SP / 13.6) + PBAR = 30.10096

STACK GAS VELOCITY, FPS
(SQR(((TS + 460) / MS) / PS)) * CP * DP * 85.49 = 82.03495

STACK GAS VOLUME, ACFM
V * AS * 60 = 46233.25

STACK GAS VOLUME, SCFH
(((528*PBAR)/(TS+460)/29.92)) *AS*V*(1-BWS) * 3600 = 1913653

PARTICULATE EMISSIONS, LBS/HR
CS * QS = 0

ISOKINETIC RATIO, %
((VMSTD/17.64)+(.002669*VLC))/AN/V/PS/T*(TS+460)*1.667 = 110.1353

Kirby
Dryer #1
3/5/92
Repetition # 3

PRESSURE DROP ACROSS ORIFICE, H = .48
METER CO-EFFICIENT, Y = .9689
METER TEMPERATURE, TM = 91.97916
BAROMETRIC PRESSURE, PBAR = 30.03
GAS METER VOLUME, VM = 49.189
LIQUID COLLECTED, VLC = 191.3
PARTICULATE SAMPLE WEIGHT, MN = 0
STATIC PRESSURE, SP = .965
STACK TEMPERATURE, TS = 181.9583
PITOT CO-EFFICIENT, CP = .84
SQUARE ROOT OF DELTA P, DP = 1.290719
AREA OF STACK, AS = 9.392999
TEST DURATION, T = 126.7
AREA OF NOZZLE, AN = 9.647846E-05
CO2 % = 2
O2 % = 18
CO % = 0

PM10 CUTPOINT RESULTS

Kirby
Dryer #2
3/5/92
REPETITION 1

CUTPOINT, D50 = 9.68672

CYCLONE FLOW, CU FT/MIN = .542449

NOZZLE VELOCITY, FT/SEC = 88.32245

MINIMUM NOZZLE VELOCITY, FT/SEC = 66.88271

MAXIMUM NOZZLE VELOCITY, FT/SEC = 103.2689

MINIMUM DELTA P = 1.118781

MAXIMUM DELTA P = 2.667204

Kirby
Dryer #2
3/5/92
Repetition # 1

SAMPLE VOLUME, STANDARD CUBIC FEET
(((H/13.6) / TM) * Y * VM * 17.64 = 44.35954

VOLUME OF WATER VAPOR, STANDARD CUBIC FEET
VLC * 0.04707 = 8.237251

FRACTIONAL MOISTURE CONTENT
VWSTD / (VMSTD + VWSTD) = .1566113

PARTICULATE CONCENTRATION, GR/SCF DB
(MN/VMSTD) * 0.01543 = 0

PARTICULATE CONCENTRATION, LBS/SCF DB
(MN/VMSTD) * 2.205^-06 = 0

MOLECULAR WEIGHT OF STACK GAS, DRY BASIS
(CO2 * .44) + (O2 * .32) + ((N2 + CO) * .28) = 29.06

MOLECULAR WEIGHT OF STACK GAS, WET BASIS
(MD * (1 - BWS)) + (18 * BWS) = 27.32788

STACK PRESSURE, INCHES OF MERCURY
(SP / 13.6) + PBAR = 30.0925

STACK GAS VELOCITY, FPS
(SQR(((TS + 460) / MS) / PS)) * CP * DP * 85.49 = 78.98909

STACK GAS VOLUME, ACFM
V * AS * 60 = 44516.67

STACK GAS VOLUME, SCFH
(((528*PBAR)/(TS+460)/29.92)) *AS*V*(1-BWS) * 3600 = 1871737

PARTICULATE EMISSIONS, LBS/HR
CS * QS = 0

ISOKINETIC RATIO, %
((VMSTD/17.64)+(.002669*VLC))/AN/V/PS/T*(TS+460)*1.667 = 111.8349

Kirby
Dryer #2
3/5/92
Repetition # 1

PRESSURE DROP ACROSS ORIFICE, H = .56
METER CO-EFFICIENT, Y = .9786
METER TEMPERATURE, TM = 82.42
BAROMETRIC PRESSURE, PBAR = 30.03
GAS METER VOLUME, VM = 46.352
LIQUID COLLECTED, VLC = 175
PARTICULATE SAMPLE WEIGHT, MN = 0
STATIC PRESSURE, SP = .85
STACK TEMPERATURE, TS = 177.8
PITOT CO-EFFICIENT, CP = .84
SQUARE ROOT OF DELTA P, DP = 1.249
AREA OF STACK, AS = 9.392999
TEST DURATION, T = 116.5
AREA OF NOZZLE, AN = 1.0236896E-04
CO2 % = 2
O2 % = 18.5
CO % = 0

PM10 CUTPOINT RESULTS

Kirby
Dryer #2
3/5/92
REPETITION 2

CUTPOINT, D50 = 9.85229

CYCLONE FLOW, CU FT/MIN = .5282498

NOZZLE VELOCITY, FT/SEC = 86.01052

MINIMUM NOZZLE VELOCITY, FT/SEC = 65.04094

MAXIMUM NOZZLE VELOCITY, FT/SEC = 100.5014

MINIMUM DELTA P = 1.056562

MAXIMUM DELTA P = 2.522698

Kirby
Dryer #2
3/5/92
Repetition # 2

SAMPLE VOLUME, STANDARD CUBIC FEET
(((H/13.6) / TM) * Y * VM * 17.64 = 44.04175

VOLUME OF WATER VAPOR, STANDARD CUBIC FEET
VLC * 0.04707 = 8.707949

FRACTIONAL MOISTURE CONTENT
VWSTD / (VMSTD + VWSTD) = .1650806

PARTICULATE CONCENTRATION, GR/SCF DB
(MN/VMSTD) * 0.01543 = 0

PARTICULATE CONCENTRATION, LBS/SCF DB
(MN/VMSTD) * 2.205^-06 = 0

MOLECULAR WEIGHT OF STACK GAS, DRY BASIS
(CO2 * .44) + (O2 * .32) + ((N2 + CO) * .28) = 29.08

MOLECULAR WEIGHT OF STACK GAS, WET BASIS
(MD * (1 - BWS)) + (18 * BWS) = 27.25091

STACK PRESSURE, INCHES OF MERCURY
(SP / 13.6) + PBAR = 30.09802

STACK GAS VELOCITY, FPS
(SQR(((TS + 460) / MS) / PS)) * CP * DP * 85.49 = 81.19288

STACK GAS VOLUME, ACFM
V * AS * 60 = 45758.68

STACK GAS VOLUME, SCFH
(((528*PBAR)/(TS+460)/29.92)) *AS*V*(1-BWS) * 3600 = 1907150

PARTICULATE EMISSIONS, LBS/HR
CS * QS = 0

ISOKINETIC RATIO, %
((VMSTD/17.64)+(.002669*VLC))/AN/V/PS/T*(TS+460)*1.667 = 105.9511

Kirby
Dryer #2
3/5/92
Repetition # 2

PRESSURE DROP ACROSS ORIFICE, H = .502
METER CO-EFFICIENT, Y = .9786
METER TEMPERATURE, TM = 85.95
BAROMETRIC PRESSURE, PBAR = 30.03
GAS METER VOLUME, VM = 46.326
LIQUID COLLECTED, VLC = 185
PARTICULATE SAMPLE WEIGHT, MN = 0
STATIC PRESSURE, SP = .925
STACK TEMPERATURE, TS = 176.96
PITOT CO-EFFICIENT, CP = .84
SQUARE ROOT OF DELTA P, DP = 1.283
AREA OF STACK, AS = 9.392999
TEST DURATION, T = 119.8
AREA OF NOZZLE, AN = 1.023689E-04
CO2 % = 2
O2 % = 19
CO % = 0

PM10 CUTPOINT RESULTS

Kirby
Dryer #2
3/5/92
REPETITION 3

CUTPOINT, D50 = 10.01362

CYCLONE FLOW, CU FT/MIN = .515786

NOZZLE VELOCITY, FT/SEC = 83.98114

MINIMUM NOZZLE VELOCITY, FT/SEC = 63.40671

MAXIMUM NOZZLE VELOCITY, FT/SEC = 98.05978

MINIMUM DELTA P = 1.013461

MAXIMUM DELTA P = 2.423921

Kirby
Dryer #2
3/5/92
Repetition # 3

SAMPLE VOLUME, STANDARD CUBIC FEET
(((H/13.6) / TM) * Y * VM * 17.64 = 44.0074

VOLUME OF WATER VAPOR, STANDARD CUBIC FEET
VLC * 0.04707 = 7.865398

FRACTIONAL MOISTURE CONTENT
VWSTD / (VMSTD + VWSTD) = .1516286

PARTICULATE CONCENTRATION, GR/SCF DB
(MN/VMSTD) * 0.01543 = 0

PARTICULATE CONCENTRATION, LBS/SCF DB
(MN/VMSTD) * 2.205^-06 = 0

MOLECULAR WEIGHT OF STACK GAS, DRY BASIS
(CO2 * .44) + (O2 * .32) + ((N2 + CO) * .28) = 29.08

MOLECULAR WEIGHT OF STACK GAS, WET BASIS
(MD * (1 - BWS)) + (18 * BWS) = 27.39996

STACK PRESSURE, INCHES OF MERCURY
(SP / 13.6) + PBAR = 30.09507

STACK GAS VELOCITY, FPS
(SQR(((TS + 460) / MS) / PS)) * CP * DP * 85.49 = 81.07115

STACK GAS VOLUME, ACFM
V * AS * 60 = 45690.08

STACK GAS VOLUME, SCFH
(((528*PBAR)/(TS+460)/29.92)) *AS*V*(1-BWS) * 3600 = 1942474

PARTICULATE EMISSIONS, LBS/HR
CS * QS = 0

ISOKINETIC RATIO, %
((VMSTD/17.64)+(.002669*VLC))/AN/V/PS/T*(TS+460)*1.667 = 103.6071

Kirby
Dryer #2
3/5/92
Repetition # 3

PRESSURE DROP ACROSS ORIFICE, H = .49
METER CO-EFFICIENT, Y = .9786
METER TEMPERATURE, TM = 82.02
BAROMETRIC PRESSURE, PBAR = 30.03
GAS METER VOLUME, VM = 45.958
LIQUID COLLECTED, VLC = 167.1
PARTICULATE SAMPLE WEIGHT, MN = 0
STATIC PRESSURE, SP = .885
STACK TEMPERATURE, TS = 174.5
PITOT CO-EFFICIENT, CP = .84
SQUARE ROOT OF DELTA P, DP = 1.287
AREA OF STACK, AS = 9.392999
TEST DURATION, T = 120.2
AREA OF NOZZLE, AN = 1.023689E-04
CO2 % = 2
O2 % = 19
CO % = 0

PM10 CUTPOINT RESULTS

Kirby
Dryer #3
3/3/92
REPETITION 1

CUTPOINT, D50 = 10.114

CYCLONE FLOW, CU FT/MIN = .5068974

NOZZLE VELOCITY, FT/SEC = 82.53388

MINIMUM NOZZLE VELOCITY, FT/SEC = 62.25146

MAXIMUM NOZZLE VELOCITY, FT/SEC = 96.32578

MINIMUM DELTA P = .9833251

MAXIMUM DELTA P = 2.354416

Kirby
Dryer #3
3/3/92
Repetition # 1

SAMPLE VOLUME, STANDARD CUBIC FEET
(((H/13.6) / TM) * Y * VM * 17.64 = 43.61917

VOLUME OF WATER VAPOR, STANDARD CUBIC FEET
VLC * 0.04707 = 8.303148

FRACTIONAL MOISTURE CONTENT
VWSTD / (VMSTD + VWSTD) = .1599148

PARTICULATE CONCENTRATION, GR/SCF DB
(MN/VMSTD) * 0.01543 = 0

PARTICULATE CONCENTRATION, LBS/SCF DB
(MN/VMSTD) * 2.205^-06 = 0

MOLECULAR WEIGHT OF STACK GAS, DRY BASIS
(CO2 * .44) + (O2 * .32) + ((N2 + CO) * .28) = 28.96

MOLECULAR WEIGHT OF STACK GAS, WET BASIS
(MD * (1 - BWS)) + (18 * BWS) = 27.20733

STACK PRESSURE, INCHES OF MERCURY
(SP / 13.6) + PBAR = 30.375

STACK GAS VELOCITY, FPS
(SQR(((TS + 460) / MS) / PS)) * CP * DP * 85.49 = 76.91234

STACK GAS VOLUME, ACFM
V * AS * 60 = 43346.26

STACK GAS VOLUME, SCFH
(((528*PBAR)/(TS+460)/29.92)) *AS*V*(1-BWS) * 3600 = 1843270

PARTICULATE EMISSIONS, LBS/HR
CS * QS = 0

ISOKINETIC RATIO, %
((VMSTD/17.64)+(.002669*VLC))/AN/V/PS/T*(TS+460)*1.667 = 107.3829

Kirby
Dryer #3
3/3/92
Repetition # 1

PRESSURE DROP ACROSS ORIFICE, H = .38
METER CO-EFFICIENT, Y = 1.0679
METER TEMPERATURE, TM = 95.08
BAROMETRIC PRESSURE, PBAR = 30.3
GAS METER VOLUME, VM = 42.38
LIQUID COLLECTED, VLC = 176.4
PARTICULATE SAMPLE WEIGHT, MN = 0
STATIC PRESSURE, SP = 1.02
STACK TEMPERATURE, TS = 173.8
PITOT CO-EFFICIENT, CP = .84
SQUARE ROOT OF DELTA P, DP = 1.223
AREA OF STACK, AS = 9.392999
TEST DURATION, T = 121.1
AREA OF NOZZLE, AN = 1.023689E-04
CO2 % = 1
O2 % = 20
CO % = 0

PM10 CUTPOINT RESULTS

Kirby
Dryer #3
3/3/92
REPETITION 2

CUTPOINT, D50 = 10.05457

CYCLONE FLOW, CU FT/MIN = .5082957

NOZZLE VELOCITY, FT/SEC = 82.76157

MINIMUM NOZZLE VELOCITY, FT/SEC = 62.46087

MAXIMUM NOZZLE VELOCITY, FT/SEC = 96.61808

MINIMUM DELTA P = .9856882

MAXIMUM DELTA P = 2.358525

Kirby
Dryer #3
3/3/92
Repetition # 2

SAMPLE VOLUME, STANDARD CUBIC FEET
(((H/13.6) / TM) * Y * VM * 17.64 = 43.62189

VOLUME OF WATER VAPOR, STANDARD CUBIC FEET
VLC * 0.04707 = 8.957421

FRACTIONAL MOISTURE CONTENT
VWSTD / (VMSTD + VWSTD) = .1703602

PARTICULATE CONCENTRATION, GR/SCF DB
(MN/VMSTD) * 0.01543 = 0

PARTICULATE CONCENTRATION, LBS/SCF DB
(MN/VMSTD) * 2.205^-06 = 0

MOLECULAR WEIGHT OF STACK GAS, DRY BASIS
(CO2 * .44) + (O2 * .32) + ((N2 + CO) * .28) = 29.02

MOLECULAR WEIGHT OF STACK GAS, WET BASIS
(MD * (1 - BWS)) + (18 * BWS) = 27.14263

STACK PRESSURE, INCHES OF MERCURY
(SP / 13.6) + PBAR = 30.36397

STACK GAS VELOCITY, FPS
(SQR(((TS + 460) / MS) / PS)) * CP * DP * 85.49 = 77.20277

STACK GAS VOLUME, ACFM
V * AS * 60 = 43509.93

STACK GAS VOLUME, SCFH
(((528*PBAR)/(TS+460)/29.92)) *AS*V*(1-BWS) * 3600 = 1830401

PARTICULATE EMISSIONS, LBS/HR
CS * QS = 0

ISOKINETIC RATIO, %
((VMSTD/17.64)+(.002669*VLC))/AN/V/PS/T*(TS+460)*1.667 = 107.2191

Kirby
Dryer #3
3/3/92
Repetition # 2

PRESSURE DROP ACROSS ORIFICE, H = .389
METER CO-EFFICIENT, Y = 1.0679
METER TEMPERATURE, TM = 100.1
BAROMETRIC PRESSURE, PBAR = 30.3
GAS METER VOLUME, VM = 42.765
LIQUID COLLECTED, VLC = 190.3
PARTICULATE SAMPLE WEIGHT, MN = 0
STATIC PRESSURE, SP = .87
STACK TEMPERATURE, TS = 172.7
PITOT CO-EFFICIENT, CP = .84
SQUARE ROOT OF DELTA P, DP = 1.227
AREA OF STACK, AS = 9.392999
TEST DURATION, T = 122.19
AREA OF NOZZLE, AN = 1.023689E-04
CO2 % = 1.5
O2 % = 19.5
CO % = 0

PM10 CUTPOINT RESULTS

Kirby
Dryer #3
3/3/92
REPETITION 3

CUTPOINT, D50 = 10.22124

CYCLONE FLOW, CU FT/MIN = .4997795

NOZZLE VELOCITY, FT/SEC = 81.37494

MINIMUM NOZZLE VELOCITY, FT/SEC = 61.33046

MAXIMUM NOZZLE VELOCITY, FT/SEC = 94.94016

MINIMUM DELTA P = .9451219

MAXIMUM DELTA P = 2.264828

Kirby
Dryer #3
3/3/92
Repetition # 3

SAMPLE VOLUME, STANDARD CUBIC FEET
(((H/13.6) / TM) * Y * VM * 17.64 = 43.59608

VOLUME OF WATER VAPOR, STANDARD CUBIC FEET
VLC * 0.04707 = 7.964244

FRACTIONAL MOISTURE CONTENT
VWSTD / (VMSTD + VWSTD) = .1544646

PARTICULATE CONCENTRATION, GR/SCF DB
(MN/VMSTD) * 0.01543 = 0

PARTICULATE CONCENTRATION, LBS/SCF DB
(MN/VMSTD) * 2.205^-06 = 0

MOLECULAR WEIGHT OF STACK GAS, DRY BASIS
(CO2 * .44) + (O2 * .32) + ((N2 + CO) * .28) = 28.92

MOLECULAR WEIGHT OF STACK GAS, WET BASIS
(MD * (1 - BWS)) + (18 * BWS) = 27.23325

STACK PRESSURE, INCHES OF MERCURY
(SP / 13.6) + PBAR = 30.36691

STACK GAS VELOCITY, FPS
(SQR(((TS + 460) / MS) / PS)) * CP * DP * 85.49 = 78.07548

STACK GAS VOLUME, ACFM
V * AS * 60 = 44001.78

STACK GAS VOLUME, SCFH
(((528*PBAR)/(TS+460)/29.92)) *AS*V*(1-BWS) * 3600 = 1886559

PARTICULATE EMISSIONS, LBS/HR
CS * QS = 0

ISOKINETIC RATIO, %
((VMSTD/17.64)+(.002669*VLC))/AN/V/PS/T*(TS+460)*1.667 = 104.1003

Kirby
Dryer #3
3/3/92
Repetition # 3

PRESSURE DROP ACROSS ORIFICE, H = .389
METER CO-EFFICIENT, Y = 1.0679
METER TEMPERATURE, TM = 101.1
BAROMETRIC PRESSURE, PBAR = 30.3
GAS METER VOLUME, VM = 42.816
LIQUID COLLECTED, VLC = 169.2
PARTICULATE SAMPLE WEIGHT, MN = 0
STATIC PRESSURE, SP = .91
STACK TEMPERATURE, TS = 172.7
PITOT CO-EFFICIENT, CP = .84
SQUARE ROOT OF DELTA P, DP = 1.243
AREA OF STACK, AS = 9.392999
TEST DURATION, T = 122.02
AREA OF NOZZLE, AN = 1.023689E-04
CO2 % = 1
O2 % = 19
CO % = 0

PM10 CUTPOINT RESULTS

Kirby
Dryer #4
3/2/92
REPETITION 1

CUTPOINT, D50 = 10.22197

CYCLONE FLOW, CU FT/MIN = .4935118

NOZZLE VELOCITY, FT/SEC = 85.26043

MINIMUM NOZZLE VELOCITY, FT/SEC = 64.58584

MAXIMUM NOZZLE VELOCITY, FT/SEC = 99.70416

MINIMUM DELTA P = 1.069274

MAXIMUM DELTA P = 2.548244

Kirby
Dryer #4
3/2/92
Repetition # 1

SAMPLE VOLUME, STANDARD CUBIC FEET
(((H/13.6) / TM) * Y * VM * 17.64 = 44.81165

VOLUME OF WATER VAPOR, STANDARD CUBIC FEET
VLC * 0.04707 = 8.773848

FRACTIONAL MOISTURE CONTENT
VWSTD / (VMSTD + VWSTD) = .1637355

PARTICULATE CONCENTRATION, GR/SCF DB
(MN/VMSTD) * 0.01543 = 0

PARTICULATE CONCENTRATION, LBS/SCF DB
(MN/VMSTD) * 2.205^-06 = 0

MOLECULAR WEIGHT OF STACK GAS, DRY BASIS
(CO2 * .44) + (O2 * .32) + ((N2 + CO) * .28) = 29.1

MOLECULAR WEIGHT OF STACK GAS, WET BASIS
(MD * (1 - BWS)) + (18 * BWS) = 27.28253

STACK PRESSURE, INCHES OF MERCURY
(SP / 13.6) + PBAR = 30.48824

STACK GAS VELOCITY, FPS
(SQR(((TS + 460) / MS) / PS)) * CP * DP * 85.49 = 82.49994

STACK GAS VOLUME, ACFM
V * AS * 60 = 46495.32

STACK GAS VOLUME, SCFH
(((528*PBAR)/(TS+460)/29.92)) *AS*V*(1-BWS) * 3600 = 1988489

PARTICULATE EMISSIONS, LBS/HR
CS * QS = 0

ISOKINETIC RATIO, %
((VMSTD/17.64)+(.002669*VLC))/AN/V/PS/T*(TS+460)*1.667 = 103.4208

Kirby
Dryer #4
3/2/92
Repetition # 1

PRESSURE DROP ACROSS ORIFICE, H = .45
METER CO-EFFICIENT, Y = .9786
METER TEMPERATURE, TM = 82.46
BAROMETRIC PRESSURE, PBAR = 30.4
GAS METER VOLUME, VM = 46.271
LIQUID COLLECTED, VLC = 186.4
PARTICULATE SAMPLE WEIGHT, MN = 0
STATIC PRESSURE, SP = 1.2
STACK TEMPERATURE, TS = 169.4
PITOT CO-EFFICIENT, CP = .84
SQUARE ROOT OF DELTA P, DP = 1.3207
AREA OF STACK, AS = 9.392999
TEST DURATION, T = 127
AREA OF NOZZLE, AN = 9.647846E-05
CO2 % = 2
O2 % = 19.5
CO % = 0

PM10 CUTPOINT RESULTS

Kirby
Dryer #4
3/2/92
REPETITION 2

CUTPOINT, D50 = 10.33894

CYCLONE FLOW, CU FT/MIN = .4869117

NOZZLE VELOCITY, FT/SEC = 84.12019

MINIMUM NOZZLE VELOCITY, FT/SEC = 63.66284

MAXIMUM NOZZLE VELOCITY, FT/SEC = 98.32885

MINIMUM DELTA P = 1.038059

MAXIMUM DELTA P = 2.47635

Kirby
Dryer #4
3/2/92
Repetition # 2

SAMPLE VOLUME, STANDARD CUBIC FEET
(((H/13.6) / TM) * Y * VM * 17.64 = 38.70949

VOLUME OF WATER VAPOR, STANDARD CUBIC FEET
VLC * 0.04707 = 6.989895

FRACTIONAL MOISTURE CONTENT
VWSTD / (VMSTD + VWSTD) = .1529538

PARTICULATE CONCENTRATION, GR/SCF DB
(MN/VMSTD) * 0.01543 = 0

PARTICULATE CONCENTRATION, LBS/SCF DB
(MN/VMSTD) * 2.205^-06 = 0

MOLECULAR WEIGHT OF STACK GAS, DRY BASIS
(CO2 * .44) + (O2 * .32) + ((N2 + CO) * .28) = 28.92

MOLECULAR WEIGHT OF STACK GAS, WET BASIS
(MD * (1 - BWS)) + (18 * BWS) = 27.24975

STACK PRESSURE, INCHES OF MERCURY
(SP / 13.6) + PBAR = 30.48456

STACK GAS VELOCITY, FPS
(SQR(((TS + 460) / MS) / PS)) * CP * DP * 85.49 = 77.67914

STACK GAS VOLUME, ACFM
V * AS * 60 = 43778.41

STACK GAS VOLUME, SCFH
(((528*PBAR)/(TS+460)/29.92)) *AS*V*(1-BWS) * 3600 = 1897337

PARTICULATE EMISSIONS, LBS/HR
CS * QS = 0

ISOKINETIC RATIO, %
((VMSTD/17.64)+(.002669*VLC))/AN/V/PS/T*(TS+460)*1.667 = 108.3093

Kirby
Dryer #4
3/2/92
Repetition # 2

PRESSURE DROP ACROSS ORIFICE, H = .45
METER CO-EFFICIENT, Y = .9786
METER TEMPERATURE, TM = 82.92
BAROMETRIC PRESSURE, PBAR = 30.4
GAS METER VOLUME, VM = 40.004
LIQUID COLLECTED, VLC = 148.5
PARTICULATE SAMPLE WEIGHT, MN = 0
STATIC PRESSURE, SP = 1.15
STACK TEMPERATURE, TS = 169.1
PITOT CO-EFFICIENT, CP = .84
SQUARE ROOT OF DELTA P, DP = 1.243
AREA OF STACK, AS = 9.392999
TEST DURATION, T = 109.8
AREA OF NOZZLE, AN = 9.647846E-05
CO2 % = 1
O2 % = 19
CO % = 0

PM10 CUTPOINT RESULTS

Kirby
Dryer #4
3/2/92
REPETITION 3

CUTPOINT, D50 = 10.09678

CYCLONE FLOW, CU FT/MIN = .4997969

NOZZLE VELOCITY, FT/SEC = 86.34627

MINIMUM NOZZLE VELOCITY, FT/SEC = 65.4778

MAXIMUM NOZZLE VELOCITY, FT/SEC = 101.0231

MINIMUM DELTA P = 1.095332

MAXIMUM DELTA P = 2.607345

Kirby
Dryer #4
3/2/92
Repetition # 3

SAMPLE VOLUME, STANDARD CUBIC FEET
(((H/13.6) / TM) * Y * VM * 17.64 = 42.53588

VOLUME OF WATER VAPOR, STANDARD CUBIC FEET
VLC * 0.04707 = 8.693829

FRACTIONAL MOISTURE CONTENT
VWSTD / (VMSTD + VWSTD) = .1697029

PARTICULATE CONCENTRATION, GR/SCF DB
(MN/VMSTD) * 0.01543 = 0

PARTICULATE CONCENTRATION, LBS/SCF DB
(MN/VMSTD) * 2.205^-06 = 0

MOLECULAR WEIGHT OF STACK GAS, DRY BASIS
(CO2 * .44) + (O2 * .32) + ((N2 + CO) * .28) = 29

MOLECULAR WEIGHT OF STACK GAS, WET BASIS
(MD * (1 - BWS)) + (18 * BWS) = 27.13327

STACK PRESSURE, INCHES OF MERCURY
(SP / 13.6) + PBAR = 30.48088

STACK GAS VELOCITY, FPS
(SQR(((TS + 460) / MS) / PS)) * CP * DP * 85.49 = 84.15836

STACK GAS VOLUME, ACFM
V * AS * 60 = 47429.97

STACK GAS VOLUME, SCFH
(((528*PBAR)/(TS+460)/29.92)) *AS*V*(1-BWS) * 3600 = 2018799

PARTICULATE EMISSIONS, LBS/HR
CS * QS = 0

ISOKINETIC RATIO, %
((VMSTD/17.64)+(.002669*VLC))/AN/V/PS/T*(TS+460)*1.667 = 102.6166

Kirby
Dryer #4
3/2/92
Repetition # 3

PRESSURE DROP ACROSS ORIFICE, H = .45
METER CO-EFFICIENT, Y = .9786
METER TEMPERATURE, TM = 78.63
BAROMETRIC PRESSURE, PBAR = 30.4
GAS METER VOLUME, VM = 43.611
LIQUID COLLECTED, VLC = 184.7
PARTICULATE SAMPLE WEIGHT, MN = 0
STATIC PRESSURE, SP = 1.1
STACK TEMPERATURE, TS = 167.9
PITOT CO-EFFICIENT, CP = .84
SQUARE ROOT OF DELTA P, DP = 1.345
AREA OF STACK, AS = 9.392999
TEST DURATION, T = 119.7
AREA OF NOZZLE, AN = 9.647846E-05
CO2 % = 1.5
O2 % = 19
CO % = 0

PM10 CUTPOINT RESULTS

Kirby
Dryer #5
3/2/92
REPETITION 1

CUTPOINT, D50 = 10.76425

CYCLONE FLOW, CU FT/MIN = .455494

NOZZLE VELOCITY, FT/SEC = 82.74771

MINIMUM NOZZLE VELOCITY, FT/SEC = 62.68462

MAXIMUM NOZZLE VELOCITY, FT/SEC = 96.76732

MINIMUM DELTA P = 1.013685

MAXIMUM DELTA P = 2.415675

Kirby
Dryer #5
3/2/92
Repetition # 2

SAMPLE VOLUME, STANDARD CUBIC FEET
(((H/13.6) / TM) * Y * VM * 17.64 = 39.2998

VOLUME OF WATER VAPOR, STANDARD CUBIC FEET
VLC * 0.04707 = 7.281729

FRACTIONAL MOISTURE CONTENT
VWSTD / (VMSTD + VWSTD) = .1563222

PARTICULATE CONCENTRATION, GR/SCF DB
(MN/VMSTD) * 0.01543 = 0

PARTICULATE CONCENTRATION, LBS/SCF DB
(MN/VMSTD) * 2.205^-06 = 0

MOLECULAR WEIGHT OF STACK GAS, DRY BASIS
(CO2 * .44) + (O2 * .32) + ((N2 + CO) * .28) = 29.02

MOLECULAR WEIGHT OF STACK GAS, WET BASIS
(MD * (1 - BWS)) + (18 * BWS) = 27.29733

STACK PRESSURE, INCHES OF MERCURY
(SP / 13.6) + PBAR = 30.37427

STACK GAS VELOCITY, FPS
(SQR(((TS + 460) / MS) / PS)) * CP * DP * 85.49 = 80.45027

STACK GAS VOLUME, ACFM
V * AS * 60 = 45340.17

STACK GAS VOLUME, SCFH
(((528*PBAR)/(TS+460)/29.92)) *AS*V*(1-BWS) * 3600 = 1968607

PARTICULATE EMISSIONS, LBS/HR
CS * QS = 0

ISOKINETIC RATIO, %
((VMSTD/17.64)+(.002669*VLC))/AN/V/PS/T*(TS+460)*1.667 = 102.5669

Kirby
Dryer #5
3/2/92
Repetition # 1

PRESSURE DROP ACROSS ORIFICE, H = .31
METER CO-EFFICIENT, Y = 1.06788
METER TEMPERATURE, TM = 82.5
BAROMETRIC PRESSURE, PBAR = 30.3
GAS METER VOLUME, VM = 37.325
LIQUID COLLECTED, VLC = 154.7
PARTICULATE SAMPLE WEIGHT, MN = 0
STATIC PRESSURE, SP = 1.01
STACK TEMPERATURE, TS = 163.4
PITOT CO-EFFICIENT, CP = .84
SQUARE ROOT OF DELTA P, DP = 1.292
AREA OF STACK, AS = 9.392999
TEST DURATION, T = 119.34
AREA OF NOZZLE, AN = 9.175021E-05
CO2 % = 1.5
O2 % = 19.5
CO % = 0

PM10 CUTPOINT RESULTS

Kirby
Dryer #5
3/2/92
REPETITION 2

CUTPOINT, D50 = 11.00383

CYCLONE FLOW, CU FT/MIN = .4428131

NOZZLE VELOCITY, FT/SEC = 80.44401

MINIMUM NOZZLE VELOCITY, FT/SEC = 60.83077

MAXIMUM NOZZLE VELOCITY, FT/SEC = 93.99649

MINIMUM DELTA P = .9515411

MAXIMUM DELTA P = 2.271979

Kirby
Dryer #5
3/2/92
Repetition # 2

SAMPLE VOLUME, STANDARD CUBIC FEET
(((H/13.6) / TM) * Y * VM * 17.64 = 38.96345

VOLUME OF WATER VAPOR, STANDARD CUBIC FEET
VLC * 0.04707 = 6.975774

FRACTIONAL MOISTURE CONTENT
VWSTD / (VMSTD + VWSTD) = .1518479

PARTICULATE CONCENTRATION, GR/SCF DB
(MN/VMSTD) * 0.01543 = 0

PARTICULATE CONCENTRATION, LBS/SCF DB
(MN/VMSTD) * 2.205^-06 = 0

MOLECULAR WEIGHT OF STACK GAS, DRY BASIS
(CO2 * .44) + (O2 * .32) + ((N2 + CO) * .28) = 28.92

MOLECULAR WEIGHT OF STACK GAS, WET BASIS
(MD * (1 - BWS)) + (18 * BWS) = 27.26182

STACK PRESSURE, INCHES OF MERCURY
(SP / 13.6) + PBAR = 30.36912

STACK GAS VELOCITY, FPS
(SQR(((TS + 460) / MS) / PS)) * CP * DP * 85.49 = 80.39337

STACK GAS VOLUME, ACFM
V * AS * 60 = 45308.1

STACK GAS VOLUME, SCFH
(((528*PBAR)/(TS+460)/29.92)) *AS*V*(1-BWS) * 3600 = 1974164

PARTICULATE EMISSIONS, LBS/HR
CS * QS = 0

ISOKINETIC RATIO, %
((VMSTD/17.64)+(.002669*VLC))/AN/V/PS/T*(TS+460)*1.667 = 100.0947

Kirby
Dryer #5
3/2/92
Repetition # 2

PRESSURE DROP ACROSS ORIFICE, H = .31
METER CO-EFFICIENT, Y = 1.06788
METER TEMPERATURE, TM = 87.96
BAROMETRIC PRESSURE, PBAR = 30.3
GAS METER VOLUME, VM = 37.378
LIQUID COLLECTED, VLC = 148.2
PARTICULATE SAMPLE WEIGHT, MN = 0
STATIC PRESSURE, SP = .94
STACK TEMPERATURE, TS = 164.5
PITOT CO-EFFICIENT, CP = .84
SQUARE ROOT OF DELTA P, DP = 1.289
AREA OF STACK, AS = 9.392999
TEST DURATION, T = 120.92
AREA OF NOZZLE, AN = 9.175021E-05
CO2 % = 1
O2 % = 19
CO % = 0

PM10 CUTPOINT RESULTS

Kirby
Dryer #5
3/2/92
REPETITION 3

CUTPOINT, D50 = 10.87924

CYCLONE FLOW, CU FT/MIN = .4481804

NOZZLE VELOCITY, FT/SEC = 81.41908

MINIMUM NOZZLE VELOCITY, FT/SEC = 61.61746

MAXIMUM NOZZLE VELOCITY, FT/SEC = 95.17068

MINIMUM DELTA P = .9852299

MAXIMUM DELTA P = 2.350371

Kirby
Dryer #5
3/2/92
Repetition # 3

SAMPLE VOLUME, STANDARD CUBIC FEET
(((H/13.6) / TM) * Y * VM * 17.64 = 39.52826

VOLUME OF WATER VAPOR, STANDARD CUBIC FEET
VLC * 0.04707 = 6.740424

FRACTIONAL MOISTURE CONTENT
VWSTD / (VMSTD + VWSTD) = .14568

PARTICULATE CONCENTRATION, GR/SCF DB
(MN/VMSTD) * 0.01543 = 0

PARTICULATE CONCENTRATION, LBS/SCF DB
(MN/VMSTD) * 2.205^-06 = 0

MOLECULAR WEIGHT OF STACK GAS, DRY BASIS
(CO2 * .44) + (O2 * .32) + ((N2 + CO) * .28) = 29

MOLECULAR WEIGHT OF STACK GAS, WET BASIS
(MD * (1 - BWS)) + (18 * BWS) = 27.39752

STACK PRESSURE, INCHES OF MERCURY
(SP / 13.6) + PBAR = 30.3625

STACK GAS VELOCITY, FPS
(SQR(((TS + 460) / MS) / PS)) * CP * DP * 85.49 = 79.78086

STACK GAS VOLUME, ACFM
V * AS * 60 = 44962.89

STACK GAS VOLUME, SCFH
(((528*PBAR)/(TS+460)/29.92)) *AS*V*(1-BWS) * 3600 = 1981939

PARTICULATE EMISSIONS, LBS/HR
CS * QS = 0

ISOKINETIC RATIO, %
((VMSTD/17.64)+(.002669*VLC))/AN/V/PS/T*(TS+460)*1.667 = 102.0725

Kirby
Dryer #5
3/2/92
Repetition # 3

PRESSURE DROP ACROSS ORIFICE, H = .31
METER CO-EFFICIENT, Y = 1.0679
METER TEMPERATURE, TM = 81.73001
BAROMETRIC PRESSURE, PBAR = 30.3
GAS METER VOLUME, VM = 37.488
LIQUID COLLECTED, VLC = 143.2
PARTICULATE SAMPLE WEIGHT, MN = 0
STATIC PRESSURE, SP = .85
STACK TEMPERATURE, TS = 161.8
PITOT CO-EFFICIENT, CP = .84
SQUARE ROOT OF DELTA P, DP = 1.285
AREA OF STACK, AS = 9.392999
TEST DURATION, T = 119.85
AREA OF NOZZLE, AN = 9.175021E-05
CO2 % = 1.5
O2 % = 19
CO % = 0

```
5 REM-Method 5 Data Reduction
10 DIM A(100):DIM B(100):DIM C(100):DIM D(100):DIM E(100)
12 DIM F(100):DIM G(100):DIM H(100):DIM I(100):DIM J(100)
14 DIM K(100):DIM L(100):DIM M(100):DIM N(100):DIM O(100)
16 DIM P(100):DIM Q(100):DIM R(100):DIM S(100):DIM T(100)
18 DIM U(100):DIM V(100):DIM W(100):DIM X(100):DIM Y(100)
20 DIM Z(100):DIM AA(100):DIM BB(100):DIM CC(100):DIM DD(100)
22 DIM EE(100):DIM FF(100):DIM GG(100):DIM HH(100):DIM II(100)
24 DIM JJ(100):DIM KK(100):DIM LL(100):DIM MM(100):DIM NN(100)
26 DIM OO(100):DIM PP(100):DIM QQ(100):DIM RR(100):DIM SS(100)
27 DIM NT(100):DIM AB(100)
30 PRINT"Method 5 Calculation Summary"
35 PRINT
40 PRINT"Select one of the following"
45 PRINT"      1. Average Data Sheets"
50 PRINT"      2. Calculate Data Sheets"
55 INPUT TT
60 IF TT = 2 THEN GOTO 500
65 PRINT
70 PRINT"Choose colume to be averaged"
75 PRINT"      1. Stack Temperature"
80 PRINT"      2. Delta H"
85 PRINT"      3. Meter Temperature"
90 PRINT"      4. Delta P"
95 PRINT
100 INPUT UU
110 IF UU > 4 THEN GOTO 70
112 PRINT
113 PRINT"Input Run #":INPUT WW
115 PRINT"Input number of points":INPUT VV
120 PRINT"Input Data"
125 PRINT
130 FOR LL = 1 TO VV
135 INPUT MM(LL)
140 NEXT LL
145 IF UU = 4 THEN GOTO 200
150 FOR LL = 1 TO VV
155 NN(LL)= MM(LL) + NN(LL - 1)
160 NEXT LL
162 PP = NN(VV)/VV
165 IF UU < 4 THEN GOTO 220
200 FOR LL = 1 TO VV
205 OO(LL)= SQR(MM(LL))
210 NN(LL) = OO(LL) + NN(LL - 1)
215 NEXT LL
217 PP = NN(VV)/VV
220 IF UU = 1 THEN I(WW) = PP
225 IF UU = 2 THEN A(WW) = PP
230 IF UU = 3 THEN C(WW) = PP
235 IF UU = 4 THEN K(WW) = PP
240 IF UU = 1 THEN PRINT"Stack Temperature = "I(WW)
245 IF UU = 2 THEN PRINT"Delta H = "A(WW)
250 IF UU = 3 THEN PRINT"Meter Temperature ="C(WW)
255 IF UU = 4 THEN PRINT"Square Root of Delta P = "K(WW)
260 GOTO 35
500 PRINT "Input Run #":INPUT WW
505 PRINT
510 PRINT "Did you average the data sheets on this machine? 1=yes  2=no":INPUT L
L
515 PRINT
```

```
517 PRINT "Input the following"
520 IF LL = 1 THEN GOTO 550
525 PRINT "Delta H":INPUT A(WW)
530 PRINT "Meter Temperature, F":INPUT C(WW)
535 PRINT"Stack Temperature, F":INPUT I(WW)
540 PRINT "Square Root of Delta P":INPUT K(WW)
550 PRINT"Is barometric pressure the same as last run? 1=yes 2=no":INPUT UU
552 IF UU = 1 THEN GOTO 555
553 PRINT"Barometric Pressure, in. H2O":INPUT D
555 PRINT"Are these parameters the same as last run? 1=yes  2=no"
559 PRINT"     1. Test Duration"
561 PRINT"     2. Nozzle Size"
563 PRINT"     3. Meter Co-efficient, Y"
565 PRINT"     4. Pitot Co-efficient, Cp"
567 PRINT"     5. Stack Area, As"
568 INPUT LL
569 IF LL = 1 THEN GOTO 590
572 PRINT"Test Duration, minutes":INPUT M
574 PRINT"Nozzle Diameter, inches":INPUT XX
576 PRINT"Meter Co-efficient, Y":INPUT B
578 PRINT"Pitot Co-efficient, Cp":INPUT J
580 PRINT"Stack Area, Sq. Ft.":INPUT L
590 PRINT"Gas Meter Volume, Cu Ft.":INPUT E(WW)
595 PRINT"Liquid Collected, mls":INPUT F(WW)
600 PRINT"Particulate Sample Weight, mg":INPUT G(WW)
605 PRINT"Static Pressure, in. H2O":INPUT H(WW)
610 PRINT"Percent CO2":INPUT O(WW)
615 PRINT"Percent O2":INPUT P(WW)
620 PRINT"Percent CO":INPUT Q(WW)
625 R(WW) = (((A(WW)/13.6)+D)/(C(WW)+460)) * B * E(WW) * 17.64
630 S(WW) = F(WW) * .04707
635 T(WW) = S(WW)/(R(WW) + S(WW))
640 U(WW) = (G(WW)/R(WW)) * .01543
645 V(WW) = (G(WW)/R(WW))*2.205E-06
650 NT(WW) = 100 - (O(WW) + P(WW) + Q(WW))
655 W(WW) = (O(WW)*.44) + (P(WW) * .32) + ((NT(WW)+Q(WW)) * .28)
660 X(WW) = (W(WW) * (1-T(WW))) + (T(WW) * 18)
665 Y(WW) = (H(WW)/13.6) + D
670 Z(WW) = (SQR(((I(WW)+460)/X(WW))/Y(WW))) * J * K(WW) * 85.49
675 AA(WW) = Z(WW) * L * 60
680 BB(WW) = (((528 * D)/(I(WW) + 460))/29.92) * L * Z(WW) * 3600 * (1-T(WW))
685 CC(WW) = BB(WW) * V(WW)
690 AN = (((XX/2)*(XX/2))*3.14159)/144
695 DD(WW) = ((R(WW)/17.64) + (.002669 * F(WW)))/AN/Z(WW)/M/Y(WW)*(I(WW)+460)*1.
667
700 PRINT
705 PRINT"VMSTD = "R(WW)
710 PRINT
715 PRINT"VWSTD = "S(WW)
720 PRINT
725 PRINT"BWS = "T(WW)
730 PRINT
735 PRINT"GR/SCF DB = "U(WW)
740 PRINT
745 PRINT"LBS/SCF DB = "V(WW)
750 PRINT
755 PRINT"MOLECULAR WEIGHT, DRY = "W(WW)
760 PRINT
765 PRINT"MOLECULAR WEIGHT, WET = "X(WW)
770 PRINT
775 PRINT"STACK PRESSURE = "Y(WW)
780 PRINT
785 PRINT"VELOCITY = "Z(WW)
790 PRINT
795 PRINT"VOLUME, ACFM = "AA(WW)
800 PRINT
```

```
805 PRINT  "HIT ANY KEY TO CONTINUE":INPUT AX
810 PRINT
815 PRINT"VOLUME, SCFH = "BB(WW)
820 PRINT
825 PRINT"EMISSIONS, LBS/HR = "CC(WW)
830 PRINT
835 PRINT"ISOKINETIC RATIO = "DD(WW)
840 PRINT
845 PRINT"DO YOU WISH TO CALCULATE ANY OF THE FOLLOWING? 1=YES  2=NO"
850 PRINT
855 PRINT"EXCESS AIR":INPUT AB
860 PRINT"GRAINS/SCF @ 12% CO2":INPUT AC
865 PRINT"LBS/10^6 BTU":INPUT AD
870 PRINT"LBS/PROCESS WEIGHT":INPUT AE
875 PRINT"LBS/1000 LBS GAS @ 50% EXCESS AIR":INPUT AF
880 IF AB = 2 THEN GOTO 900
885 AB(WW) = 100 * (P(WW)-Q(WW))/((.264 * NT(WW))-(P(WW)-Q(WW)))
890 PRINT"EXCESS AIR = "AB(WW)
900 IF AC = 2 THEN GOTO 920
905 AC(WW) = 12/O(WW) * U(WW)
910 PRINT"GR/SCF @ 12% CO2 = "AC(WW)
920 IF AD = 2 THEN GOTO 940
940 IF AE = 2 THEN GOTO 960
960 IF AF = 2 THEN GOTO 980
980 PRINT"HARD COPY? 1=YES  2=NO":INPUT AG
985 IF AG = 2 THEN GOTO 35
990 PRINT"INPUT THE FOLLOWING"
995 PRINT"COMPANY NAME":INPUT A$
1000 PRINT"SOURCE TESTED":INPUT B$
1005 PRINT"TEST DATE":INPUT C$
1010 LPRINT  A$
1015 LPRINT  B$
1016 LPRINT  C$
1020 LPRINT"Repetition #"WW
1025 LPRINT
1030 LPRINT
1035 LPRINT"SAMPLE VOLUME, STANDARD CUBIC FEET"
1040 LPRINT"(((H/13.6) / TM) * Y * VM * 17.64 = "R(WW)
1045 LPRINT
1050 LPRINT"VOLUME OF WATER VAPOR, STANDARD CUBIC FEET"
1055 LPRINT"VLC * 0.04707 = "S(WW)
1060 LPRINT
1065 LPRINT"FRACTIONAL MOISTURE CONTENT"
1067 LPRINT"VWSTD / (VMSTD + VWSTD) = "T(WW)
1070 LPRINT
1075 LPRINT"PARTICULATE CONCENTRATION, GR/SCF DB"
1080 LPRINT"(MN/VMSTD) * 0.01543 = "U(WW)
1085 LPRINT
1090 LPRINT"PARTICULATE CONCENTRATION, LBS/SCF DB"
1095 LPRINT"(MN/VMSTD) * 2.205^-06 = "V(WW)
1100 LPRINT
1105 LPRINT"MOLECULAR WEIGHT OF STACK GAS, DRY BASIS
1110 LPRINT"(CO2 * .44) + ( O2 * .32) + (( N2 + CO) * .28) = "W(WW)
1115 LPRINT
1120 LPRINT"MOLECULAR WEIGHT OF STACK GAS, WET BASIS"
1125 LPRINT"(MD * (1 - BWS)) + (18 * BWS) = "X(WW)
1130 LPRINT
1135 LPRINT"STACK PRESSURE, INCHES OF MERCURY"
1140 LPRINT"(SP / 13.6) + PBAR = "Y(WW)
1145 LPRINT
1150 LPRINT"STACK GAS VELOCITY, FPS"
1155 LPRINT"(SQR(((TS + 460) / MS) / PS)) * CP * DP * 85.49 = "Z(WW)
1160 LPRINT
1165 LPRINT"STACK GAS VOLUME, ACFM"
1170 LPRINT"V * AS * 60 = "AA(WW)
1175 LPRINT
```

```
1180 LPRINT"STACK GAS VOLUME, SCFH"
1185 LPRINT"(((528*PBAR)/(TS+460)/29.92)) *AS*V*(1-BWS) * 3600 = "BB(WW)
1190 LPRINT
1195 LPRINT"PARTICULATE EMISSIONS, LBS/HR"
1200 LPRINT"CS * QS = "CC(WW)
1205 LPRINT
1210 LPRINT"ISOKINETIC RATIO, %"
1215 LPRINT"((VMSTD/17.64)+(.002669*VLC))/AN/V/PS/T*(TS+460)*1.667 = "DD(WW)
1217 LPRINT
1220 IF AB =2 THEN GOTO 1230
1222 LPRINT
1225 LPRINT"EXCESS AIR = "AB(WW)
1230 IF AC = 2 THEN GOTO 1240
1234 LPRINT"GRAINS/SCF @ 12% CO2 = "AC(WW)
1236 LPRINT
1240 IF AD = 2 THEN GOTO 1250
1250 IF AE = 2 THEN GOTO 1260
1260 IF AF = 2 THEN GOTO 1270
1270 LPRINT CHR$(12)
1275 LPRINT A$
1280 LPRINT B$
1285 LPRINT C$
1290 LPRINT"Repetition #"WW
1295 LPRINT
1300 LPRINT
1305 LPRINT"PRESSURE DROP ACROSS ORIFICE, H = "A(WW)
1310 LPRINT"METER CO-EFFICIENT, Y = "B
1315 LPRINT"METER TEMPERATURE, TM = "C(WW)
1320 LPRINT"BAROMETRIC PRESSURE, PBAR = "D
1325 LPRINT"GAS METER VOLUME, VM = "E(WW)
1330 LPRINT"LIQUID COLLECTED, VLC = "F(WW)
1335 LPRINT"PARTICULATE SAMPLE WEIGHT, MN = "G(WW)
1340 LPRINT"STATIC PRESSURE, SP = "H(WW)
1345 LPRINT"STACK TEMPERATURE, TS = "I(WW)
1350 LPRINT"PITOT CO-EFFICIENT, CP = "J
1355 LPRINT"SQUARE ROOT OF DELTA P, DP = "K(WW)
1360 LPRINT"AREA OF STACK, AS = "L
1365 LPRINT"TEST DURATION, T = "M
1370 LPRINT"AREA OF NOZZLE, AN = "AN
1375 LPRINT"CO2 % = "O(WW)
1380 LPRINT"O2 % = "P(WW)
1385 LPRINT "CO % = "Q(WW)
1390 LPRINT CHR$(12)
1400 GOTO 30
```

```
1 DIM AG(24): DIM AH(24)
10 REM PM10 Field Calculations
15 PRINT"PM 10 Feild Calculations"
20 PRINT
25 PRINT"Input the following"
30 PRINT
35 PRINT"Barometric Pressure, in hg. = ":INPUT A
40 PRINT
45 PRINT"STATIC PRESSURE, IN H20 = ":INPUT B
50 PRINT
55 PRINT"STACK TEMPERATURE, F = ":INPUT C
60 PRINT
65 PRINT"METER TEMPERATURE, F = ":INPUT D
70 PRINT
75 PRINT"ORIFACE DELTA H@ = ":INPUT E
80 PRINT
85 PRINT"CO2, % = ":INPUT F
90 PRINT
95 PRINT"O2, % = ":INPUT G
100 PRINT
105 PRINT"MOISTURE, % = ":INPUT H
110 PRINT
115 PRINT"AVERAGE DELTA P = ":INPUT I
117 J = H/100
118 REM VISCOSITY OF STACK GAS
120 K = ((152.418 + (.2552 * C)) + (3.2355E-05 * (C*C)) + (.53147 * G)) - (74.14
3 * J)
122 REM MOLECULAR WEIGHT, DRY
125 L = (F*.44) + (G*.32) + ((100 - (F+G)) * .28)
127 REM MOLECULAR WEIGHT, WET
130 M = (L * (1 - J)) + (18 * J)
135 REM STACK PRESSURE
140 N = A+ (B/13.6)
145 REM CYCLONE FLOW RATE
150 O = (((( C + 460) / M)/N) ^ .2949) * .002837 * K
152 PRINT"CYCLONE FLOW RATE = "O
155 REM NOZZLE SIZE
160 REM GAS METER FLOW RATE
165 P = O * (((D+460)/(C+460))*(1-J))
170 PRINT
175 PRINT"GAS METER FLOW RATE = "P
180 REM STACK GAS VELOCITY
185 Q = (SQR(((C+460)*I)/(M*N))) * 85.49 *.84
190 PRINT
195 PRINT"VELOCITY = "Q
200 REM NOZZLE SIZE
205 S = (P * (C + 460)) / (D + 460) / 60 / Q
210 T = (SQR((S * 144) / 3.14157)) * 2
215 PRINT
220 PRINT"NOZZLE SIZE = "T
225 REM DELTA H
230 U = (P*P) * A * E * .05952
235 PRINT
240 PRINT"DELTA H = "U
245 PRINT
250 PRINT"HARD COPY? 1 = YES, 2 = NO": INPUT V
260 IF V = 2 THEN GOTO 500
265 PRINT"INPUT THE FOLLOWING"
270 PRINT
275 PRINT"COMPANY":INPUT A$
280 PRINT
285 PRINT"SOURCE":INPUT B$
```

```
290 PRINT
295 PRINT"REPETITION": INPUT C$
300 PRINT
305 PRINT"TEST DATE":INPUT D$
310 LPRINT "PM10 CALCULATION SUMMARY"
315 LPRINT
320 LPRINT A$
325 LPRINT B$
330 LPRINT "REPETITION# "C$
335 LPRINT D$
340 LPRINT
345 LPRINT"CYCLONE FLOW = "O" CFM"
350 LPRINT
355 LPRINT"GAS METER FLOW = "P" CFM"
360 LPRINT
365 LPRINT"STACK GAS VELOCITY = "Q" FPS"
370 LPRINT
375 LPRINT"NOZZLE SIZE = "T" INCHES"
380 LPRINT
385 LPRINT"AVERAGE DELTA H = "V" INCHES H2O"
390 LPRINT
395 LPRINT"BAROMETRIC PRESSURE = "A" IN HG"
400 LPRINT
405 LPRINT"STATIC PRESSURE = "B" IN H2O"
410 LPRINT
415 LPRINT"STACK TEMPERATURE, F = "C
420 LPRINT
425 LPRINT"METER TEMPERATURE, F = "D
430 LPRINT
435 LPRINT"ORIFACE DELTA H@ = "E
440 LPRINT
445 LPRINT"CO2, % = "F
450 LPRINT
455 LPRINT"O2, % = "G
460 LPRINT
465 LPRINT"MOISTURE, % = "H
470 LPRINT
475 LPRINT"AVERAGE DELTA P = " I
480 LPRINT CHR$(12)
485 GOTO 10
500 PRINT"CALCULATE DWELL TIME? 1 = YES , 2 = NO":INPUT X
510 IF X = 2 THEN GOTO 800
515 PRINT
520 PRINT"INPUT THE FOLLOWING"
525 PRINT
530 PRINT"TOTAL RUN TIME": INPUT AA
535 PRINT
540 PRINT"TOTAL POINTS":INPUT AB
545 PRINT
550 FOR AF = 1 TO AB
554 PRINT
555 PRINT"DELTA P FOR POINT #"AF" = ":INPUT AG(AF)
556 PRINT
560 NEXT AF
562 AH(1) = ((AG(1) / I)^.5) * (AA/AB)
565 FOR Z = 2 TO AB
570 AH(Z) = (AH(1) /(AG(1) ^ .5)) * (AG(Z) ^.5)
572 NEXT Z
575 FOR Z = 1 TO AB
580 PRINT"DURATION, POINT# "Z" = "AH(Z)
590 NEXT Z
600 PRINT
605 PRINT"HARD COPY? 1 = YES, 2 = NO":INPUT Y
610 IF Y = 2 THEN GOTO 10
615 PRINT"INPUT THE FOLLOWING"
620 PRINT
```

```
625 PRINT"PLANT":INPUT A$
630 PRINT"LOCATION":INPUT B$
635 PRINT"TEST DATE":INPUT C$
640 PRINT"REPETITION":INPUT D$
650 LPRINT "POINT TO POINT TIME DURATIONS"
655 LPRINT
660 LPRINT A$
665 LPRINT B$
670 LPRINT C$
675 LPRINT "REPETITION# "D$
680 LPRINT
685 FOR Z = 1 TO AB
690 LPRINT"POINT # "Z" DURATION "AH(Z)" MINUTES
700 NEXT Z
705 LPRINT CHR$(12)
800 REM CUTPOINT
805 PRINT
810 PRINT"INPUT THE FOLLOWING"
815 PRINT
820 PRINT"VOLUME OF WATER VAPOR":INPUT H
825 PRINT
830 PRINT"METER VOLUME":INPUT BF
835 PRINT
840 PRINT"METER Y":INPUT BG
845 PRINT
850 PRINT"DELTA H":INPUT BH
855 PRINT
860 PRINT"SAMPLE TIME":INPUT BZ
865 PRINT
870 REM CYCLONE FLOW
875 BJ = (((BH/13.6)+A)/(D+460))*BF*BG*17.64
880 BL = ((C+460)/(17.64*N))*((BJ+H)/BZ)
890 REM CUTPOINT
895 BM = .15625 *(((C+460)/(M*N))^.2091)*((K/BL)^.7091)
900 PRINT
905 PRINT"CUTPOINT = "BM
910 REM NOZZLE VELOCITY
915 PRINT"INPUT NOZZLE DIAMETER":INPUT BN
920 BO = (3.056 * BL)/(BN*BN)
925 REM MINIMUM NOZZLE VELOCITY
930 BP = BO*(.2457+((.3072-((.2603*(BL^.5)*K)/(BO^1.5)))^.5))
935 REM MAXIMUM NOZZLE VELOCITY
940 BQ = BO*(.4457+((.569-((.2603*(BL^.5)*K)/(BO^1.5)))^.5))
945 REM MINIMUM DELTA P
950 BR = 1.3686E-04 * (N*M*(BP*BP))/((C+460)*(.84*.84))
955 REM MAXIMUM DELTA P
960 PS = 1.3686E-04 * (N*M*(BQ*BQ))/((C+460)*(.84*.84))
965 PRINT
970 PRINT"NOZZLE VELOCITY = "BO
975 PRINT
980 PRINT"MINIMUM NOZZLE VELOCITY = "BP
985 PRINT
990 PRINT"MAXIMUM NOZZLE VELOCITY = "BQ
995 PRINT
1000 PRINT"MINIMUM DELTA P = "BR
1005 PRINT
1010 PRINT"MAXIMUM DELTA P = "PS
1015 PRINT
1020 PRINT"HARD COPY? 1 = YES  2 = NO":INPUT XX
1025 IF XX = 2 THEN GOTO 800
1030 PRINT
1035 PRINT"COMPANY NAME":INPUT A$
1040 PRINT
1045 PRINT"SOURCE":INPUT B$
1050 PRINT
1055 PRINT"DATE":INPUT C$
```

```
1060 PRINT
1065 PRINT"REPETITION":INPUT D$
1068 LPRINT"PM10 CUTPOINT RESULTS"
1069 LPRINT
1070 LPRINT A$
1075 LPRINT B$
1080 LPRINT C$
1085 LPRINT"REPETITION "D$
1090 LPRINT
1100 LPRINT"CUTPOINT, D50 = "BM
1105 LPRINT
1110 LPRINT"CYCLONE FLOW, CU FT/MIN = "BL
1115 LPRINT
1120 LPRINT"NOZZLE VELOCITY, FT/SEC = "BO
1125 LPRINT
1130 LPRINT"MINIMUM NOZZLE VELOCITY, FT/SEC = "BP
1135 LPRINT
1140 LPRINT"MAXIMUM NOZZLE VELOCITY, FT/SEC = "BQ
1145 LPRINT
1150 LPRINT"MINIMUM DELTA P = "BR
1155 LPRINT
1160 LPRINT"MAXIMUM DELTA P = "PS
1165 LPRINT CHR$(12)
1170 GOTO 10
```

APPENDIX B

BLANK ANALYTICAL DATA FORM

PLANT: Kirby Forest Products

SAMPLE LOCATION: Dryers 1 thru 5

LIQUID LEVEL MARKED? ✓

BLANK VOLUME (Va): 100

DATE OF WEIGHING 3/9/92 8:17AM GROSS WEIGHT 98.1220 g

DATE OF WEIGHING 3/9/92 3:11 PM GROSS WEIGHT 98.1219 g

AVERAGE GROSS WEIGHT 98.12195 g

TARE WEIGHT 98.1218 g

WEIGHT OF BLANK (Ma) 0.00015 g

$$Ca = \frac{Ma}{Va\ Pa} = 0.0019 \text{ mg/g}$$

Note: In no case should a blank residue greater than 0.01 mg/g or 0.001% of the blank weight be subtracted from the sample weight.

PARTICULATE ANALYTICAL DATA FORM

Company: Kirby Run Number: 1, PW + Filter

Location: Dryer # 1 Acetone Density (Pa): 0.7852

Date: 3/5/92

Liquid Level Marked? ✓

Acetone Blank Concentration (Ca) 0

Acetone Rinse Volume (Vaw) 155

Residue in Rinse (Wa) = Ca * Vaw * Pa 0

Date of Weighing 3/9/92 8:13 AM Gross Wt. 102.2730 g

Date of Weighing 3/9/92 3:09 PM Gross Wt. 102.2723 g

Average Gross Wt. 102.27265 g

Less Blank Residue (Wa) 0

Tare Wt. 102.2543 g

Weight of Particulate in Acetone Rinse 0.01835 g → 18.35 mg

8:36 AM Date of Weighing 3/10/92 Gross Filter Wt. 0.61549 g

2:45 PM Date of Weighing 3/10/92 Gross Filter Wt. 0.61541 g

Average Gross Wt. 0.61545 g

Filter Tare Wt. 0.44640 g

Weight of Particulate on Filter 0.16905 g → 169.05 mg

Weight of Particulate 187.40 mg

PARTICULATE ANALYTICAL DATA FORM

Company: Kirby Run Number: 2, PW + Filter

Location: Dryer # 1 Acetone Density (Pa): 0.7852

Date: 3/5/92

Liquid Level Marked? ✓

Acetone Blank Concentration (Ca) 0

Acetone Rinse Volume (Vaw) 175

Residue in Rinse (Wa) = Ca * Vaw * Pa 0

Date of Weighing 3/9/92 8:13 AM Gross Wt. 98.7636 g

Date of Weighing 3/9/92 3:10 PM Gross Wt. 98.7633 g

Average Gross Wt. 98.76345 g

Less Blank Residue (Wa) 0

Tare Wt. 98.7461 g

Weight of Particulate in Acetone Rinse 0.01735 g → 17.35 mg

8:37 AM Date of Weighing 3/10/92 Gross Filter Wt. 0.63757 g

2:49 PM Date of Weighing 3/10/92 Gross Filter Wt. 0.63750 g

Average Gross Wt. 0.637535 g

Filter Tare Wt. 0.45729 g

Weight of Particulate on Filter 0.180245 g → 180.245 mg

Weight of Particulate 197.595

PARTICULATE ANALYTICAL DATA FORM

Company: Kirby Run Number: 3, PW + Filter

Location: Dryer #1 Acetone Density (Pa): 0.7852

Date: 3/5/92

Liquid Level Marked? ✓

Acetone Blank Concentration (Ca) 0

Acetone Rinse Volume (Vaw) 180

Residue in Rinse (Wa) = Ca * Vaw * Pa 0

Date of Weighing 3/9/92 8:14 AM Gross Wt. 107.4253 g

Date of Weighing 3/9/92 3:10 PM Gross Wt. 107.4251 g

Average Gross Wt. 107.4552 g

Less Blank Residue (Wa) 0

Tare Wt. 107.4083 g

Weight of Particulate in Acetone Rinse 0.0469 g → 46.9 mg

8:39 AM Date of Weighing 3/10/92 Gross Filter Wt. 0.60112 g

2:50 PM Date of Weighing 3/10/92 Gross Filter Wt. 0.60108 g

Average Gross Wt. 0.60110 g

Filter Tare Wt. 0.45452 g

Weight of Particulate on Filter 0.14658 g → 146.58 mg

Weight of Particulate 193.48 mg

PARTICULATE ANALYTICAL DATA FORM

Company: Kirby Run Number: 1, PW & Filter

Location: Dryer #2 Acetone Density (Pa): 0.7852

Date: 3/5/92

Liquid Level Marked? ✓

Acetone Blank Concentration (Ca) 0

Acetone Rinse Volume (Vaw) 175

Residue in Rinse (Wa) = Ca * Vaw * Pa 0

Date of Weighing 3/9/92 8:10 AM Gross Wt. 101.5369 g

Date of Weighing 3/9/92 3:07 PM Gross Wt. 101.5364 g

Average Gross Wt. 101.53665 g

Less Blank Residue (Wa) 0

Tare Wt. 101.5187 g

Weight of Particulate in Acetone Rinse 0.01795 g → 17.95 mg

7:16 AM Date of Weighing 3/10/92 Gross Filter Wt. 0.63312 g

3:11 PM Date of Weighing 3/10/92 Gross Filter Wt. 0.63315 g

Average Gross Wt. 0.633135 g

Filter Tare Wt. 0.46665 g

Weight of Particulate on Filter 0.166485 g → 166.485 mg

Weight of Particulate 184.435 mg

PARTICULATE ANALYTICAL DATA FORM

Company: Kirby Run Number: 2, PW + Filter

Location: Dryer #2 Acetone Density (Pa): 0.7852

Date: 3/5/92

Liquid Level Marked? ✓

Acetone Blank Concentration (Ca) 0

Acetone Rinse Volume (Vaw) 135

Residue in Rinse (Wa) = Ca * Vaw * Pa 0

Date of Weighing 3/9/92 8:11 AM Gross Wt. 102.4592 g

Date of Weighing 3/9/92 3:07 PM Gross Wt. 102.4580 g

Average Gross Wt. 102.4586 g

Less Blank Residue (Wa) 0

Tare Wt. 102.4476 g

Weight of Particulate in Acetone Rinse 0.0110 g → 11.0 mg

8:16 AM Date of Weighing 3/10/92 Gross Filter Wt. 0.59628 g

3:12 PM Date of Weighing 3/10/92 Gross Filter Wt. 0.59632 g

Average Gross Wt. 0.59635 g

Filter Tare Wt. 0.45531 g

Weight of Particulate on Filter 0.14104 g → 141.04 mg

Weight of Particulate 152.04 mg

PARTICULATE ANALYTICAL DATA FORM

Company: Kirby Run Number: 3, PW + Filter

Location: Dryer #2 Acetone Density (Pa): 0.7852

Date: 3/5/92

Liquid Level Marked? ✓

Acetone Blank Concentration (Ca) 0

Acetone Rinse Volume (Vaw) 165

Residue in Rinse (Wa) = Ca * Vaw * Pa 0

Date of Weighing 3/9/92 8:11 AM Gross Wt. 97.3210 g

Date of Weighing 3/9/92 3:08 PM Gross Wt. 97.3206 g

Average Gross Wt. 97.3208 g

Less Blank Residue (Wa) 0

Tare Wt. 97.3083 g

Weight of Particulate in Acetone Rinse 0.0125 g → 12.5 mg

8:18 AM Date of Weighing 3/10/92 Gross Filter Wt. 0.57448 g

3:14 PM Date of Weighing 3/10/92 Gross Filter Wt. 0.57440 g

Average Gross Wt. 0.57444 g

Filter Tare Wt. 0.46389 g

Weight of Particulate on Filter 0.11055 g → 110.55 mg

Weight of Particulate 123.05 mg

PARTICULATE ANALYTICAL DATA FORM

Company: Kirby Run Number: 1, PW + Filter

Location: Dryer #3 Acetone Density (Pa): 0.7852

Date: 3/3/92

Liquid Level Marked? ✓

Acetone Blank Concentration (Ca) 0

Acetone Rinse Volume (Vaw) 170

Residue in Rinse (Wa) = Ca * Vaw * Pa 0

Date of Weighing 3/9/92 8:09 AM Gross Wt. 100.1691 g

Date of Weighing 3/9/92 3:05 PM Gross Wt. 100.1682 g

Average Gross Wt. 100.16865 g

Less Blank Residue (Wa) 0

Tare Wt. 100.1446 g

Weight of Particulate in Acetone Rinse 0.02405 g → 24.05 mg

8:19 AM Date of Weighing 3/10/92 Gross Filter Wt. 0.58981 g

3:18 PM Date of Weighing 3/10/92 Gross Filter Wt. 0.58977 g

Average Gross Wt. 0.58979 g

Filter Tare Wt. 0.44840 g

Weight of Particulate on Filter 0.14139 g → 141.39 mg

Weight of Particulate 165.44 mg

PARTICULATE ANALYTICAL DATA FORM

Company: Kirby Run Number: 2, PW + Filter

Location: Dryer #3 Acetone Density (Pa): 0.7852

Date: 3/3/92

Liquid Level Marked? ✓

Acetone Blank Concentration (Ca) 0

Acetone Rinse Volume (Vaw) 150

Residue in Rinse (Wa) = Ca * Vaw * Pa 0

Date of Weighing 3/9/92 8:09 AM Gross Wt. 99.8886 g

Date of Weighing 3/9/92 3:05 PM Gross Wt. 99.8878 g

Average Gross Wt. 99.8882 g

Less Blank Residue (Wa) 0

Tare Wt. 99.8709 g

Weight of Particulate in Acetone Rinse 0.0173 g → 17.3 mg

8:25 AM Date of Weighing 3/10/92 Gross Filter Wt. 0.57661 g

3:19 PM Date of Weighing 3/10/92 Gross Filter Wt. 0.57664 g

Average Gross Wt. 0.576625 g

Filter Tare Wt. 0.44373 g

Weight of Particulate on Filter 0.132895 g → 132.895 mg

Weight of Particulate 150.195 mg

PARTICULATE ANALYTICAL DATA FORM

Company: Kirby Run Number: 3, PW + Filter

Location: Dryer # 3 Acetone Density (Pa): 0.7852

Date: 3/3/92

Liquid Level Marked? ✓

Acetone Blank Concentration (Ca) 0

Acetone Rinse Volume (Vaw) 210

Residue in Rinse (Wa) = Ca * Vaw * Pa 0

Date of Weighing 3/9/92 8:10 AM Gross Wt. 104.6017 g

Date of Weighing 3/9/92 3:06 PM Gross Wt. 104.6011 g

Average Gross Wt. 104.6014 g

Less Blank Residue (Wa) 0

Tare Wt. 104.5697 g

Weight of Particulate in Acetone Rinse 0.0317 g → 31.7 mg

8:26 AM Date of Weighing 3/10/92 Gross Filter Wt. 0.57568 g

3:21 PM Date of Weighing 3/10/92 Gross Filter Wt. 0.57566 g

Average Gross Wt. 0.57567 g

Filter Tare Wt. 0.45638 g

Weight of Particulate on Filter 0.11929 g → 119.29 mg

Weight of Particulate 150.99 mg

PARTICULATE ANALYTICAL DATA FORM

Company: Kirby Run Number: 1, PW + Filter

Location: Dryer #4 Acetone Density (Pa): 0.7852

Date: 3/2/92

Liquid Level Marked? ✓

Acetone Blank Concentration (Ca) 0

Acetone Rinse Volume (Vaw) 175

Residue in Rinse (Wa) = Ca * Vaw * Pa 0

Date of Weighing 3/9/92 8:06 Am Gross Wt. 99.0268 g

Date of Weighing 3/9/92 3:02 PM Gross Wt. 99.0252 g

Average Gross Wt. 99.0260 g

Less Blank Residue (Wa) 0

Tare Wt. 98.9953 g

Weight of Particulate in Acetone Rinse 0.0307 g → 30.7 mg

8:27 AM Date of Weighing 3/10/92 Gross Filter Wt. 0.59546 g

3:22 PM Date of Weighing 3/10/92 Gross Filter Wt. 0.59546 g

Average Gross Wt. 0.59546 g

Filter Tare Wt. 0.45856 g

Weight of Particulate on Filter 0.13690 g → 136.9 mg

Weight of Particulate 167.6 mg

PARTICULATE ANALYTICAL DATA FORM

Company: Kirby Run Number: 2, PW + Filter

Location: Dryer #4 Acetone Density (Pa): 0.7852

Date: 3/2/92

Liquid Level Marked? ✓

Acetone Blank Concentration (Ca) 0

Acetone Rinse Volume (Vaw) 210

Residue in Rinse (Wa) = Ca * Vaw * Pa 0

Date of Weighing 3/9/92 8:08 AM Gross Wt. 103.7240 g

Date of Weighing 3/9/92 3:03 PM Gross Wt. 103.7226 g

Average Gross Wt. 103.7233 g

Less Blank Residue (Wa) 0

Tare Wt. 103.6824 g

Weight of Particulate in Acetone Rinse 0.0409 g 40.9 mg

8:35 PM Date of Weighing 3/10/92 Gross Filter Wt. 0.58120 g

3:24 PM Date of Weighing 3/10/92 Gross Filter Wt. 0.58111 g

Average Gross Wt. 0.581155 g

Filter Tare Wt. 0.45338 g

Weight of Particulate on Filter 0.127775 g → 127.775 mg

Weight of Particulate 168.675 mg

PARTICULATE ANALYTICAL DATA FORM

Company: Kirby Run Number: 3, PW & Filter

Location: Dryer #4 Acetone Density (Pa): 0.7852

Date: 3/2/92

Liquid Level Marked? ✓

Acetone Blank Concentration (Ca) 0

Acetone Rinse Volume (Vaw) 170

Residue in Rinse (Wa) = Ca * Vaw * Pa 0

Date of Weighing 3/9/92 8:08 AM Gross Wt. 92.6116 g

Date of Weighing 3/9/92 3:03 PM Gross Wt. 92.6115 g

Average Gross Wt. 92.61155 g

Less Blank Residue (Wa) 0

Tare Wt. 92.5746 g

Weight of Particulate in Acetone Rinse 0.03695 g ⇒ 36.95 mg

8:36 AM Date of Weighing 3/10/92 Gross Filter Wt. 0.58284 g

3:25 PM Date of Weighing 3/10/92 Gross Filter Wt. 0.58280 g

Average Gross Wt. 0.58282 g

Filter Tare Wt. 0.44803 g

Weight of Particulate on Filter 0.13479 g ⇒ 134.79

Weight of Particulate 171.74 mg

PARTICULATE ANALYTICAL DATA FORM

Company: Kirby Run Number: 1, PW + Filter

Location: Dryer #5 Acetone Density (Pa): 0.7852

Date: 3/2/92

Liquid Level Marked? ✓

Acetone Blank Concentration (Ca) 0

Acetone Rinse Volume (Vaw) 255

Residue in Rinse (Wa) = Ca * Vaw * Pa 0

Date of Weighing 3/9/92 8:05 AM Gross Wt. 103.2529 g

Date of Weighing 3/9/92 3:00 PM Gross Wt. 103.2524 g

Average Gross Wt. 103.25265 g

Less Blank Residue (Wa) 0

Tare Wt. 103.2163 g

Weight of Particulate in Acetone Rinse 0.03635 g → 36.35 mg

8:38 AM Date of Weighing 3/10/92 Gross Filter Wt. 0.54844 g

3:45 PM Date of Weighing 3/10/92 Gross Filter Wt. 0.54838 g

Average Gross Wt. 0.54841 g

Filter Tare Wt. 0.44938 g

Weight of Particulate on Filter 0.09903 g → 99.03 mg

Weight of Particulate 135.38 mg

PARTICULATE ANALYTICAL DATA FORM

Company: Kirby Run Number: 2, PW + Filter

Location: Dryer #5 Acetone Density (Pa): 0.7852

Date: 3/2/92

Liquid Level Marked? ✓

Acetone Blank Concentration (Ca) 0

Acetone Rinse Volume (Vaw) 175

Residue in Rinse (Wa) = Ca * Vaw * Pa 0

Date of Weighing 3/9/92 8:05 AM Gross Wt. 93.3152 g

Date of Weighing 3/9/92 3:01 PM Gross Wt. 93.3145 g

Average Gross Wt. 93.31485 g

Less Blank Residue (Wa) 0

Tare Wt. 93.2842 g

Weight of Particulate in Acetone Rinse 0.0365 g → 36.5 mg

:39 AM Date of Weighing 3/10/92 Gross Filter Wt. 0.55370 g

3:47 PM Date of Weighing 3/10/92 Gross Filter Wt. 0.55366 g

Average Gross Wt. 0.55368 g

Filter Tare Wt. 0.45342 g

Weight of Particulate on Filter 0.10026 g → 100.26 mg

Weight of Particulate 136.76 mg.

PARTICULATE ANALYTICAL DATA FORM

Company: Kirby Run Number: 3, PW & Filter

Location: Dyer #5 Acetone Density (Pa): 0.7852

Date: 3/2/92

Liquid Level Marked? ✓

Acetone Blank Concentration (Ca) 0

Acetone Rinse Volume (Vaw) 170

Residue in Rinse (Wa) = Ca * Vaw * Pa 0

Date of Weighing 3/9/92 8:06 AM Gross Wt. 106.8386 g

Date of Weighing 3/9/92 3:01 PM Gross Wt. 106.8376 g

Average Gross Wt. 106.8381 g

Less Blank Residue (Wa) 0

Tare Wt. 106.7972 g

Weight of Particulate in Acetone Rinse 0.0409 g → 40.9 mg

8:40AM Date of Weighing 3/10/92 Gross Filter Wt. 0.58081 g

3:52PM Date of Weighing 3/10/92 Gross Filter Wt. 0.58077 g

Average Gross Wt. 0.58079 g

Filter Tare Wt. 0.47040 g

Weight of Particulate on Filter 0.11039 g → 110.39 mg

Weight of Particulate 151.29 mg

PARTICULATE ANALYTICAL DATA FORM

Company: Kirby Run Number: 1, Cyclone & Imps

Location: Dryer #1 Acetone Density (Pa): 0.7852

Date: 3/5/92

Liquid Level Marked? ✓

Acetone Blank Concentration (Ca) 0

Acetone Rinse Volume (Vaw) 50

Residue in Rinse (Wa) = Ca * Vaw * Pa 0

Date of Weighing 3/9/92 8:32 AM Gross Wt. 98.2294 g

Date of Weighing 3/9/92 3:29 PM Gross Wt. 98.2296 g

Average Gross Wt. 98.2295 g

Less Blank Residue (Wa) 0

Tare Wt. 98.2231 g

Cyclone → Weight of Particulate in Acetone Rinse 0.0064 g → 6.4 mg

Date of Weighing 3/10/92 Gross ~~Filter~~ Imps Wt. 105.7434 g

Date of Weighing 3/10/92 Gross ~~Filter~~ Imps Wt. 105.7430 g

Average Gross Wt. 105.7432 g

~~Filter~~ Tare Wt. 105.7288 g

Weight of Particulate on ~~Filter~~ Imps 0.0144 g → 14.4 mg

Weight of Particulate _____

PARTICULATE ANALYTICAL DATA FORM

Company: Kirby Run Number: 2, Cyclone Wash & Imps

Location: Dryer #1 Acetone Density (Pa): 0.7852

Date: 3/5/92

Liquid Level Marked? ✓

Acetone Blank Concentration (Ca) 0

Acetone Rinse Volume (Vaw) 45

Residue in Rinse (Wa) = Ca * Vaw * Pa 0

Date of Weighing 3/9/92 8:34 AM Gross Wt. 102.6363 g

Date of Weighing 3/9/92 3:31 PM Gross Wt. 102.6356 g

Average Gross Wt. 102.63595 g

Less Blank Residue (Wa) 0

Tare Wt. 102.6301 g

Cyclone → Weight of Particulate in Acetone Rinse 0.00585 g → 5.85 mg

Date of Weighing 3/10/92 Gross ~~Filter~~ Imps Wt. 99.2464

Date of Weighing 3/10/92 Gross ~~Filter~~ Imps Wt. 99.2460 g

Average Gross Wt. 99.2462 g

~~Filter~~ Tare Wt. 99.23989 g

Weight of Particulate on ~~Filter~~ Imps 0.0064 g → 6.4 mg

Weight of Particulate

PARTICULATE ANALYTICAL DATA FORM

Company: Kirby Run Number: 3, Cyclone Wash & Imps

Location: Dryer #1 Acetone Density (Pa): 0.7852

Date: 3/5/92

Liquid Level Marked? ✓

Acetone Blank Concentration (Ca) 0

Acetone Rinse Volume (Vaw) 45

Residue in Rinse (Wa) = Ca * Vaw * Pa 0

Date of Weighing 3/9/92 8:35 AM Gross Wt. 103.0872 g

Date of Weighing 3/9/92 3:36 PM Gross Wt. 103.0867 g

Average Gross Wt. 103.08695 g

Less Blank Residue (Wa) 0

Tare Wt. 103.0809 g

Weight of Particulate in Acetone Rinse 0.00605 g → 6.05 mg

Date of Weighing 3/10/92 Gross ~~Filter~~ Imps Wt. 94.2730 g

Date of Weighing 3/10/92 Gross ~~Filter~~ Imps Wt. 94.2728 g

Average Gross Wt. 94.2729 g

~~Filter~~ Tare Wt. 94.2628 g

Weight of Particulate on ~~Filter~~ Imps 0.0101 g → 10.1 mg

Weight of Particulate _____

PARTICULATE ANALYTICAL DATA FORM

Company: Kirby Run Number: 1, Cyclone Wash & Imps

Location: Dryer # 2 Acetone Density (Pa): 0.7852

Date: 3/5/92

Liquid Level Marked? ✓

Acetone Blank Concentration (Ca) 0

Acetone Rinse Volume (Vaw) 55

Residue in Rinse (Wa) = Ca * Vaw * Pa 0

Date of Weighing 3/9/92 8:30AM Gross Wt. 100.6264 g

Date of Weighing 3/9/92 3:26 PM Gross Wt. 100.6259 g

Average Gross Wt. 100.62615 g

Less Blank Residue (Wa) 0

Tare Wt. 100.6185 g

Cyclone → Weight of Particulate in Acetone Rinse 0.00765 g → 7.65 mg

Date of Weighing 3/10/92 Gross ~~Filter~~ Imps Wt. 99.6019 g

Date of Weighing 3/10/92 Gross ~~Filter~~ Imps Wt. 99.6016 g

Average Gross Wt. 99.60175 g

~~Filter~~ Tare Wt. 99.5959 g

Weight of Particulate on ~~Filter~~ Imps 0.00585 g → 5.85 mg

Weight of Particulate

PARTICULATE ANALYTICAL DATA FORM

Company: Kirby Run Number: 2, Cyclone Wash & Imps

Location: Dryer #2 Acetone Density (Pa): 0.7852

Date: 3/5/92

Liquid Level Marked? ✓

Acetone Blank Concentration (Ca) 0

Acetone Rinse Volume (Vaw) 60

Residue in Rinse (Wa) = Ca * Vaw * Pa 0

Date of Weighing 3/9/92 8:31 AM Gross Wt. 102.9302 g

Date of Weighing 3/9/92 3:28 PM Gross Wt. 102.9297 g

Average Gross Wt. 102.92995 g

Less Blank Residue (Wa) 0

Tare Wt. 102.9208 g

Cyclone → Weight of Particulate in Acetone Rinse 0.00915 g → 9.15 mg

Date of Weighing 3/10/92 Gross ~~Filter~~ Imps Wt. 104.5246 g

Date of Weighing 3/10/92 Gross ~~Filter~~ Imps Wt. 104.5244 g

Average Gross Wt. 104.5245 g

~~Filter~~ Tare Wt. 104.5212 g

Weight of Particulate on ~~Filter~~ Imps 0.0033 g → 3.3 mg

Weight of Particulate _____

PARTICULATE ANALYTICAL DATA FORM

Company: Kirby Run Number: 3, Cyclone & Imps

Location: Dryer # 2 Acetone Density (Pa): 0.7852

Date: 3/5/92

Liquid Level Marked? ✓

Acetone Blank Concentration (Ca) 0

Acetone Rinse Volume (Vaw) 50

Residue in Rinse (Wa) = Ca * Vaw * Pa 0

Date of Weighing 3/9/92 8:31AM Gross Wt. 103.8249 g

Date of Weighing 3/9/92 3:29PM Gross Wt. 103.8243 g

Average Gross Wt. 103.8246 g

Less Blank Residue (Wa) 0

Tare Wt. 103.8192 g

Cyclone → Weight of Particulate in Acetone Rinse 0.0054 g → 5.4 mg

Date of Weighing 3/10/92 Gross ~~Filter~~ Imps Wt. 97.9489 g

Date of Weighing 3/10/92 Gross ~~Filter~~ Imps Wt. 97.9489 g

Average Gross Wt. 97.9489 g

~~Filter~~ Tare Wt. 97.9459 g

Weight of Particulate on ~~Filter~~ Imps 0.0030 g → 3.0 mg

Weight of Particulate _____

PARTICULATE ANALYTICAL DATA FORM

Company: Kirby Run Number: 1, Cyclone & Imps

Location: Dryer #3 Acetone Density (Pa): 0.7852

Date: 3/3/92

Liquid Level Marked? ✓

Acetone Blank Concentration (Ca) 0

Acetone Rinse Volume (Vaw) 110

Residue in Rinse (Wa) = Ca * Vaw * Pa 0

Date of Weighing 3/9/92 8:25AM Gross Wt. 97.2460 g

Date of Weighing 3/9/92 3:24PM Gross Wt. 97.2455 g

Average Gross Wt. 97.24575 g

Less Blank Residue (Wa) 0

Tare Wt. 97.2115 g

Cyclone → Weight of Particulate in Acetone Rinse 0.03425 g → 34.25 mg

Date of Weighing 3/10/92 Gross ~~Filter~~ Imps Wt. 107.4255 g

Date of Weighing 3/10/92 Gross ~~Filter~~ Imps Wt. 107.4253 g

Average Gross Wt. 107.4254 g

~~Filter~~ Tare Wt. 107.4192

Weight of Particulate on ~~Filter~~ Imps 0.0062 g → 6.2 mg

Weight of Particulate

PARTICULATE ANALYTICAL DATA FORM

Company: Kirby Run Number: 2, Cyclone Wash + Imps

Location: Dryer #3 Acetone Density (Pa): 0.7852

Date: 3/3/92

Liquid Level Marked? ✓

Acetone Blank Concentration (Ca) 0

Acetone Rinse Volume (Vaw) 110

Residue in Rinse (Wa) = Ca * Vaw * Pa 0

Date of Weighing 3/9/92 8:26AM Gross Wt. 99.2051 g

Date of Weighing 3/9/92 3:25PM Gross Wt. 99.2050 g

Average Gross Wt. 99.20505 g

Less Blank Residue (Wa) 0

Tare Wt. 99.1829 g

Cyclone → Weight of Particulate in Acetone Rinse 0.02215 g → 22.15 mg

Date of Weighing 3/10/92 Gross ~~Filter~~ Imps Wt. 105.4422 g

Date of Weighing 3/10/92 Gross ~~Filter~~ Imps Wt. 105.4418 g

Average Gross Wt. 105.4420 g

~~Filter~~ Tare Wt. 105.4375 g

Weight of Particulate on ~~Filter~~ Imps 0.0045 g → 4.5 mg

Weight of Particulate _____

PARTICULATE ANALYTICAL DATA FORM

Company: Kirby Run Number: 3, Cyclone Wash + Imps

Location: Dryer #3 Acetone Density (Pa): 0.7852

Date: 3/3/92

Liquid Level Marked? ✓

Acetone Blank Concentration (Ca) 0

Acetone Rinse Volume (Vaw) 90

Residue in Rinse (Wa) = Ca * Vaw * Pa 0

Date of Weighing 3/9/92 8:27 AM Gross Wt. 104.8880 g

Date of Weighing 3/9/92 3:25 PM Gross Wt. 104.8875 g

Average Gross Wt. 104.88775 g

Less Blank Residue (Wa) 0

Tare Wt. 104.8694 g

Cyclone → Weight of Particulate in Acetone Rinse 0.01835 g → 18.35 mg

Date of Weighing 3/10/92 Gross ~~Filter~~ Imps Wt. 97.3268 g

Date of Weighing 3/10/92 Gross ~~Filter~~ Imps Wt. 97.3265 g

Average Gross Wt. 97.32665 g

~~Filter~~ Tare Wt. 97.3222 g

Weight of Particulate on ~~Filter~~ Imps 0.00445 g → 4.45 mg

Weight of Particulate

PARTICULATE ANALYTICAL DATA FORM

Company: Kirby Run Number: 1, Cyclone Wash + Imps

Location: Dryer # 4 Acetone Density (Pa): 0.7852

Date: 3/2/92

Liquid Level Marked? ✓

Acetone Blank Concentration (Ca) 0

Acetone Rinse Volume (Vaw) 50

Residue in Rinse (Wa) = Ca * Vaw * Pa 0

Date of Weighing 3/2/92 8:23 AM Gross Wt. 104.5399 g

Date of Weighing 3/2/92 3:22 PM Gross Wt. 104.5392 g

Average Gross Wt. 104.53955 g

Less Blank Residue (Wa) 0

Tare Wt. 104.5211 g

Cyclone → Weight of Particulate in Acetone Rinse 0.01845 g → 18.45 mg

Date of Weighing 3/10/92 Gross ~~Filter~~ Imps Wt. 97.2032 g

Date of Weighing 3/10/92 Gross ~~Filter~~ Imps Wt. 97.2032 g

Average Gross Wt. 97.2032 g

~~Filter~~ Imps Tare Wt. 97.1956 g

Weight of Particulate on ~~Filter~~ IMPS 0.0076 g → 7.6 mg

Weight of Particulate _____

PARTICULATE ANALYTICAL DATA FORM

Company: Kirby Run Number: 2, Cyclone Wash + Imps

Location: Dryer #4 Acetone Density (Pa): 0.7852

Date: 3/2/92

Liquid Level Marked? ✓

Acetone Blank Concentration (Ca) 0

Acetone Rinse Volume (Vaw) 75

Residue in Rinse (Wa) = Ca * Vaw * Pa 0

Date of Weighing 3/9/92 8:23AM Gross Wt. 114.6617g

Date of Weighing 3/9/92 3:23 PM Gross Wt. 114.6613g

Average Gross Wt. 114.6615g

Less Blank Residue (Wa) 0

Tare Wt. 114.6527g

Cyclone → Weight of Particulate in Acetone Rinse 0.0088g → 8.8mg

Date of Weighing 3/10/92 Gross ~~Filter~~ Imps Wt. 105.7766g

Date of Weighing 3/10/92 Gross ~~Filter~~ Imps Wt. 105.7764g

Average Gross Wt. 105.7765g

~~Filter~~ Tare Wt. 105.7690g

Weight of Particulate on ~~Filter~~ Imps 0.0075g → 7.5mg

Weight of Particulate _____

PARTICULATE ANALYTICAL DATA FORM

Company: Kirby Run Number: 3, Cyclone Wash & Imps

Location: Dryer #4 Acetone Density (Pa): 0.7852

Date: 3/2/92

Liquid Level Marked? ✓

Acetone Blank Concentration (Ca) 0

Acetone Rinse Volume (Vaw) 85

Residue in Rinse (Wa) = Ca * Vaw * Pa 0

Date of Weighing 3/9/92 8:25AM Gross Wt. 104.4207 g

Date of Weighing 3/9/92 3:24 PM Gross Wt. 104.4200 g

Average Gross Wt. 104.42035 g

Less Blank Residue (Wa) 0

Tare Wt. 104.4012 g

Cyclone → Weight of Particulate in Acetone Rinse 0.01915 g → 19.15 mg

Date of Weighing 3/10/92 Gross ~~Filter~~ Imps Wt. 95.8006 g

Date of Weighing 3/10/92 Gross ~~Filter~~ Imps Wt. 95.8002 g

Average Gross Wt. 95.8004 g

~~Filter~~ Tare Wt. 95.7918 g

Weight of Particulate on ~~Filter~~ Imps 0.0086 g → 8.6 mg

Weight of Particulate _____

PARTICULATE ANALYTICAL DATA FORM

Company: Kirby Run Number: 1, Cyclone Wash + Imps

Location: Dryer #5 Acetone Density (Pa): 0.7852

Date: 3/2/92

Liquid Level Marked? ✓

Acetone Blank Concentration (Ca) 0

Acetone Rinse Volume (Vaw) 115

Residue in Rinse (Wa) = Ca * Vaw * Pa 0

Date of Weighing 3/9/92 8:20 AM Gross Wt. 103.2448 g

Date of Weighing 3/9/92 3:19 PM Gross Wt. 103.2448 g

Average Gross Wt. 103.2448 g

Less Blank Residue (Wa) 0

Tare Wt. 103.2166 g

Cyclone → Weight of Particulate in Acetone Rinse 0.0282 g → 28.2 mg

Date of Weighing 3/10/92 Gross ~~Filter~~ Imps Wt. 98.5563 g

Date of Weighing 3/10/92 Gross ~~Filter~~ Imps Wt. 98.5561 g

Average Gross Wt. 98.5562 g

~~Filter~~ Tare Wt. 98.5506 g

Weight of Particulate on ~~Filter~~ Imps 0.0056 g → 5.6 mg

Weight of Particulate

PARTICULATE ANALYTICAL DATA FORM

Company: Kirby Run Number: 2, Cyclone Wash & Imps

Location: Dryer #5 Acetone Density (Pa): 0.7852

Date: 3/2/92

Liquid Level Marked? ✓

Acetone Blank Concentration (Ca) 0

Acetone Rinse Volume (Vaw) 70

Residue in Rinse (Wa) = Ca * Vaw * Pa 0

Date of Weighing 3/9/92 8:22 AM Gross Wt. 95.4669 g

Date of Weighing 3/9/92 3:20 PM Gross Wt. 95.4673 g

Average Gross Wt. 95.4671 g

Less Blank Residue (Wa) 0

Tare Wt. 95.4515 g

Cyclone → Weight of Particulate in Acetone Rinse 0.0156 g → 15.6 mg

Date of Weighing 3/10/92 Gross ~~Filter~~ Imps Wt. 106.5547 g

Date of Weighing 3/10/92 Gross ~~Filter~~ Imps Wt. 106.5545 g

Average Gross Wt. 106.5546 g

~~Filter~~ Tare Wt. 106.5501 g

Weight of Particulate on ~~Filter~~ Imps 0.0045 g → 4.5 mg

Weight of Particulate _____

PARTICULATE ANALYTICAL DATA FORM

Company: Kirby Run Number: 3, Cyclone Wash + Imps

Location: Dryer #5 Acetone Density (Pa): 0.7852

Date: 3/2/92

Liquid Level Marked? ✓

Acetone Blank Concentration (Ca) 0

Acetone Rinse Volume (Vaw) 70

Residue in Rinse (Wa) = Ca * Vaw * Pa 0

Date of Weighing 3/9/92 8:22 AM Gross Wt. 95.8325 g

Date of Weighing 3/9/92 3:21 PM Gross Wt. 95.8318 g

Average Gross Wt. 95.83215 g

Less Blank Residue (Wa) 0

Tare Wt. 95.8073 g

Cyclone → Weight of Particulate in Acetone Rinse 0.02485 g → 24.85 mg

Date of Weighing 3/10/92 Gross ~~Filter~~ Imps Wt. 98.9466 g

Date of Weighing 3/10/92 Gross ~~Filter~~ Imps Wt. 98.9465 g

Average Gross Wt. 98.94655 g

~~Filter~~ Tare Wt. 98.9431 g

Weight of Particulate on ~~Filter~~ Imps 0.00345 g → 3.45 mg

Weight of Particulate _____

APPENDIX C

PARTICULATE FIELD DATA

PLANT: Kirby
DATE: 3/5/92
REPETITION: 1

LOCATION: Dryer Exhaust #1
OPERATOR: JS
STACK #: 1
SAMPLE BOX #: 3
METER BOX #: 5
AMBIENT TEMPERATURE: 70
BAROMETRIC PRESSURE: 30.03
ASSUMED MOISTURE: 15%
PROBE LENGHT: 5'
NOZZLE DIAMETER: .0000964 sq.ft (.133")
STACK DIAMETER: 41½"
METER H : 1.8
C FACTOR: .84
METER CO-EFFICIENT: .9689231

IMPINGERS

	Initial	Final
#1: 20 mls H_2O		260
#2: 100 mls H_2O		110
#3: –		3
#4: 200 grms S.Gel		211.4
#5:		
		184.4

COMMENTS:

CO_2	O_2
2%	18%

FILTER TARE: .44640

PRE-TEST LEAK CHECK
Meter: .009 Cu. ft. 15 in. HG
Pitots: ✓ 185 in. H20
175

POST-TEST LEAK CHECK
Meter: .005 Cu. ft. 5 in. HG
Pitots ✓ in. H20

Start → 9:49

#	θ	STATIC PRES.	Ts °F	ΔP	√ΔP	ΔH	Vm FT.³	Tm INLET	Tm OUTLET	OVEN TEMP	IMP OUTLET TEMP	VACUUM (IN HG)
1	4.7		184	1.3		.48	423.114	97	92	262	64	3
2	5.0	+1.1	185	1.5		.48	424.93	98	92	263	64	3
3	5.0		185	1.5		.48	426.87	98	92	266	64	3
4	5.5		186	1.8		.48	428.82	98	93	261	64	3
5	5.5		186	1.8		.48	430.95	99	93	264	64	3
6	5.3		186	1.7		.48	433.09	100	94	263	64	3
7	5.5		187	1.8		.48	435.14	100	95	264	64	3
8	5.5		186	1.8		.48	437.28	100	95	265	64	3
9	5.5		186	1.8		.48	439.41	101	96	266	64	3
10	5.2		184	1.6		.48	441.55	101	95	263	64	3
11	5.0		185	1.5		.48	443.57	100	96	260	64	3
12	4.8		182	1.4		.48	445.51	100	95	261	64	3
B1	5.0		165	1.5		.48	447.378	98	95	266	64	3
2	4.8		183	1.4		.48	449.31	100	95	260	64	3
3	5.0		183	1.5		.48	451.18	100	95	256	64	3
4	5.3		185	1.7		.48	453.12	101	95	255	64	3
5	5.5		183	1.8		.48	455.18	102	96	252	64	3
6	5.5		185	1.8		.48	457.31	102	97	255	64	3
7	5.5		185	1.8		.48	459.45	101	96	254	64	3
8	5.5		185	1.8		.48	461.59	101	95	252	64	3
9	5.5		184	1.8		.48	463.72	101	96	250	64	3
10	5.0		183	1.5		.48	465.85	100	95	253	64	3
11	4.3		181	1.1		.48	467.80	100	95	256	64	3
12	4.5		179	1.2		.48	469.46	100	95	254	64	3
							471.216					
Av	123.9	+1.1	183.5	1.593	1.262	.48	48.102		97.31			

PARTICULATE FIELD DATA

PLANT: Kirby
DATE: 3/5/92
REPETITION: 2

LOCATION: Dryer Exhaust #1
OPERATOR: JS
STACK #: 1
SAMPLE BOX #: 6
METER BOX #: 5
AMBIENT TEMPERATURE: 75°
BAROMETRIC PRESSURE: 30.03
ASSUMED MOISTURE: 15%
PROBE LENGHT: 5'
NOZZLE DIAMETER: .133
STACK DIAMETER: 41½"
METER H : 1.8
C FACTOR: .84
METER CO-EFFICIENT: .9689231

IMPINGERS

	Initial	Final
#1:	100 mls H_2O	249
#2:	100 mls H_2O	114
#3:	–	3
#4:	200 grms S.Gel	215
#5:		181

COMMENTS:

CO_2	O_2
2%	18%

FILTER TARE: .44373

PRE-TEST LEAK CHECK
Meter: 0.005 Cu. ft. 15 in. HG
Pitots: ✓ in. H20
12:16

POST-TEST LEAK CHECK
Meter: 0.005 Cu. ft. 5 in. HG
Pitots ✓ in. H20

#	θ	STATIC PRES.	Ts °F	ΔP	√ΔP	ΔH	Vm FT.³	Tm INLET	Tm OUTLET	OVEN TEMP	IMP OUTLET TEMP	VACUUM (IN HG)
1	5.0	+.95	180	1.5		.48	471.433	93	91	251	65	3
2	5.2		181	1.6		.48	473.37	95	90	250	65	3
3	5.2		180	1.6		.48	475.39	96	91	251	65	3
4	5.5		181	1.8		.48	477.41	98	93	253	65	3
5	5.3		181	1.7		.48	479.54	99	94	252	65	3
6	5.4		183	1.75		.48	481.60	99	94	254	65	3
7	5.5		184	1.8		.48	483.70	100	95	256	65	3
8	5.5		183	1.8		.48	485.83	102	96	252	65	3
9	5.5		184	1.8		.48	487.97	103	98	252	65	3
10	5.5		183	1.8		.48	490.10	104	99	253	65	3
11	4.7		183	1.35		.48	492.24	104	100	253	65	3
12	4.5		182	1.2		.48	494.06	102	98	254	65	3
1	5.0		183	1.5		.48	495.814	98	96	253	65	3
2	5.2		183	1.6		.48	497.75	99	96	256	65	3
3	5.5		183	1.8		.48	499.77	101	96	250	65	3
4	5.5		184	1.8		.48	501.90	100	96	253	65	3
5	5.5		184	1.8		.48	504.04	100	95	253	65	3
6	5.5		183	1.8		.48	506.18	99	95	255	65	3
7	5.5		184	1.8		.48	508.31	99	94	255	65	3
8	5.5		183	1.8		.48	510.45	99	93	253	65	3
9	5.5		184	1.8		.48	512.58	98	93	259	65	3
10	5.5		183	1.8		.48	514.72	97	93	253	65	3
11	5.0		182	1.5		.48	516.85	95	92	253	65	3
12	4.7		179	1.3		.48	518.79	95	92	255	65	3
							520.622					
Av	126.7		182.5	1.661	1.2889	.48	49.189		96.75			

PARTICULATE FIELD DATA

PLANT: Kirby
DATE: 3/5/92
REPETITION: 3

LOCATION: Dryer Exhaust #1
OPERATOR: JS
STACK #: 1
SAMPLE BOX #: 1
METER BOX #: 5
AMBIENT TEMPERATURE: 70°
BAROMETRIC PRESSURE: 30.03
ASSUMED MOISTURE: 15%
PROBE LENGHT: 5'
NOZZLE DIAMETER: .133
STACK DIAMETER: 41½"
METER H : 1.8
C FACTOR: .84
METER CO-EFFICIENT: .9689231

IMPINGERS

	Initial	Final
#1: 100 mls H_2O		266
#2: 100 mls H_2O		110
#3: –		0
#4: 200 grms S.Gel		215.3
#5: –		
		191.3

COMMENTS:

CO_2	O_2
2%	18%

FILTER TARE: .45453

PRE-TEST LEAK CHECK
Meter: 0.005 Cu. ft. .15 in. HG
Pitots: ✓ .85 in. H20
2:46 .75

POST-TEST LEAK CHECK
Meter: 0.005 Cu. ft. 5 in. HG
Pitots ✓ 5 in. H20

#	θ	STATIC PRES.	Ts °F	ΔP	√ΔP	ΔH	Vm FT.³	Tm INLET	Tm OUTLET	OVEN TEMP	IMP OUTLET TEMP	VACUUM (IN Hg)
A1	4.8	+.90	179	1.4		.48	520.757	89	86	251	65	2
2	5.2		182	1.6		.48	522.62	90	88	255	65	2
3	5.3		183	1.7		.48	524.63	94	91	250	65	2
4	5.5		184	1.8		.48	526.69	96	91	251	65	2
5	5.5		185	1.8		.48	528.83	97	92	265	65	2
6	5.5		187	1.8		.48	530.96	99	93	260	65	2
7	5.5		185	1.8		.48	533.10	97	92	261	65	2
8	5.5		183	1.8		.48	535.23	96	90	255	65	2
9	5.5		185	1.6		.48	537.37	96	90	255	65	2
10	5.2		181	1.6		.48	539.50	95	90	257	65	2
11	4.8		179	1.4		.49	541.52	94	90	256	65	2
12	4.5		179	1.2		.48	543.39	94	90	251	65	2
B1	5.0		182	1.5		.48	545.138	92	89	250	65	2
2	5.3		181	1.7		.48	547.07	93	90	251	65	2
3	5.5		181	1.8		.48	549.13	93	96	251	65	2
4	5.5		182	1.8		.48	551.27	93	89	255	65	2
5	5.5	+.95	182	1.8		.48	553.40	93	89	251	65	2
6	5.5		182	1.8		.49	555.54	93	89	252	65	2
7	5.5		182	1.8		.49	557.67	93	89	250	65	2
8	5.5		182	1.8		.48	559.81	94	90	251	65	2
9	5.5		181	1.8		.48	561.94	93	87	255	65	2
10	5.3		181	1.7		.48	564.08	93	89	255	65	2
11	5.0		180	1.5		.48	566.14	94	90	257	65	2
12	4.8		179	1.4		.48	568.08	94	90	251	65	2
							569.946					
AV	126.7	.965	181.9		1.2908	.48	49.189		91.98			

PARTICULATE FIELD DATA

PLANT: LP
DATE: 3-5-92
REPETITION: 1

LOCATION: Dryer #2
OPERATOR: MP, DB
STACK #: #2
SAMPLE BOX #: 7
METER BOX #: 6
AMBIENT TEMPERATURE: 75
BAROMETRIC PRESSURE: 30.03
ASSUMED MOISTURE: 15%
PROBE LENGHT: 5
NOZZLE DIAMETER: .136, .137, .138 (.137)
STACK DIAMETER: 41.5
METER H : 1.8919
C FACTOR: .84
METER CO-EFFICIENT: .9786

IMPINGERS

	Initial	Final
#1:	100 H_2O	251
#2:	100 H_2O	107
#3:		3
#4:	200 SG	214
#5:		175

COMMENTS:

CO_2 2.0 O_2 18.5

FILTER TARE: .46665

PRE-TEST LEAK CHECK
Meter: 0.011 Cu. ft. 16 in. HG
Pitots: ✓ 1.4 ✓ 1.6 in. H20

POST-TEST LEAK CHECK
Meter: 0.00 Cu. ft. 2 in. HG
Pitots ✓ 1.3 ✓ 2.0 in. H20

Start 9:22

#	θ min/pt	STATIC PRES.	Ts °F	ΔP	√ΔP	ΔH	Vm FT.3	Tm INLET	Tm OUTLET	OVEN TEMP	IMP OUTLET TEMP	VACUUM (IN HG)
1	4.1		174	1.2		.56	228.283	71	72	254	64	1
2	4.2		177	1.2		.56	29.9	78	74	253	64	1
3	4.4		177	1.3		.56	31.6	81	74	259	64	1
4	4.7		178	1.5		.56	33.4	82	75	258	64	1
5	4.9	4.85	179	1.6		.56	35.3	84	77	258	64	1
6	4.9		179	1.6		.56	37.3	85	77	260	64	1
7	5.0		179	1.7		.56	39.3	87	78	263	64	1
8	5.4		179	1.9		.56	41.3	88	78	261	64	1
9	5.2		180	1.8		.56	43.5	88	79	262	64	1
10	4.7		179	1.5		.56	45.6	88	80	260	64	1
11	4.2		177	1.2		.56	47.6	86	79	255	64	1
12	4.1		175	1.1		.56	49.3	87	79	260	64	1
1'	5.0	4.85	177	1.65		.56	250.976	81	79	265	64	1
2	5.2		178	1.8		.56	53.0	86	79	267	64	1
3	5.5		178	2.0		.56	55.1	88	80	261	64	1
4	5.5		180	2.0		.56	57.3	88	78	264	64	1
5	5.6		179	2.0		.56	59.6	89	80	260	64	1
6	5.5		180	2.0		.56	61.8	89	80	259	64	1
7	5.4		179	1.9		.56	64.1	89	81	261	64	1
8	5.1		179	1.65		.56	66.3	90	81	260	64	1
9	5.0		178	1.65		.56	68.4	90	82	266	64	1
10	4.7		178	1.45		.56	70.4	90	82	263	64	1
11	4.2		175	1.2		.56	72.3	91	82	262	64	1
12	4.1		174	1.2		.56	73.9	91	83	263	64	1
							74.635					
AV	116.5		177.8	1.5603	1.2491	.56	146.352		82.42			

PARTICULATE FIELD DATA

PLANT: LP
DATE: 3-5-92
REPETITION: 2

LOCATION: Dryer #2
OPERATOR: MP DB
STACK #: #2
SAMPLE BOX #: 6
METER BOX #: 6
AMBIENT TEMPERATURE: 80
BAROMETRIC PRESSURE: 30.03
ASSUMED MOISTURE: 15
PROBE LENGHT: 8'
NOZZLE DIAMETER: .137
STACK DIAMETER: 47.5"
METER H : 1.8919
C FACTOR: .84
METER CO-EFFICIENT: .9786

IMPINGERS

	Initial	Final
#1:	100 H2O	259
#2:	100 H2O	113
#3:		3
#4:	200 56	215
#5:		185

COMMENTS:

CO2	O2
2.0	19.0

FILTER TARE: .45531

PRE-TEST LEAK CHECK
Meter: 0.015 Cu. ft. 15 in. HG
Pitots: ✓ 1.6 in. H20
✓ 1.5

POST-TEST LEAK CHECK
Meter: 0.005 Cu. ft. 5 in. HG
Pitots ✓ 2.0 in. H20
1.5

	θ	STATIC PRES.	Ts °F	ΔP	√ΔP	ΔH	Vm FT.3	Tm INLET	Tm OUTLET	OVEN TEMP	IMP OUTLET TEMP	VACUUM (IN Hg)
1	5.1		178	1.7		.56	275.960	80	78	244	67	2.5
2	5.4		178	1.9		.56	78.0	85	79	246	67	2.5
3	5.5		178	2.0		.56	80.2	86	79	243	67	2.5
4	5.5		178	2.0		.56	82.4	88	80	256	67	2.5
5	5.7	H.95	178	2.0		.49	84.7	88	80	266	67	2.5
6	5.7		178	2.0		.49	86.8	88	80	258	67	2.5
7	5.4		178	1.9		.49	89.0	87	80	259	67	2.5
8	5.2		177	1.8		.49	91.1	90	82	261	67	2.5
9	5.0		177	1.65		.49	93.1	90	82	257	67	2.5
10	4.4		176	1.3		.49	95.0	91	83	258	67	2.5
11	4.1		173	1.1		.49	96.7	90	82	260	67	2.5
12	4.1		172	1.2		.49	98.2	91	83	261	67	2.5
1	4.6		175	1.4		.49	299.844	86	83	245	67	2.5
2	4.8		177	1.5		.49	301.6	91	84	240	67	2.5
3	5.1		179	1.75		.49	3.4	92	84	258	67	2.5
4	5.2	H.90	179	1.8		.49	5.4	93	85	259	67	2.5
5	5.4		179	1.9		.49	7.3	93	85	248	67	2.5
6	5.4		180	1.9		.49	9.4	92	85	250	67	2.5
7	5.4		179	1.9		.49	11.5	92	85	256	67	2.5
8	5.1		181	1.75		.49	13.5	92	84	261	67	2.5
9	5.1		179	1.7		.49	15.5	92	84	262	67	2.5
10	4.4		179	1.3		.49	17.4	90	83	245	67	2.5
11	4.1		169	1.2		.49	19.1	92	84	259	67	2.5
12	4.1		170	1.2		.49	20.7	90	83	254	67	2.5
							322.286					
AV	119.8	H.925	176.96	1.6463	1.2831	.502	46.326		85.95			

PARTICULATE FIELD DATA

PLANT: LP
DATE: 3-5-92
REPETITION: 3

LOCATION: Dryer #2
OPERATOR: MP DB
STACK #:
SAMPLE BOX #: 7
METER BOX #: 6
AMBIENT TEMPERATURE: 70
BAROMETRIC PRESSURE: 30.03
ASSUMED MOISTURE: 15%
PROBE LENGHT: 6
NOZZLE DIAMETER: .137
STACK DIAMETER: 41.5"
METER H : 1.8919
C FACTOR: .84
METER CO-EFFICIENT: .9786

IMPINGERS

	Initial	Final
#1:	100 H2O	242
#2:	100 H2O	110
#3:		2
#4:	200 SG	213.1
#5:		
		167.1

COMMENTS:

CO2	O2
2%	19%

FILTER TARE: .46287

PRE-TEST LEAK CHECK
Meter: 0.009 Cu. ft. 15 in. HG
Pitots: ✓ 1.6 in. H20
✓ 1.4

POST-TEST LEAK CHECK
Meter: 0.005 Cu. ft. 2.5 in. HG
Pitots ✓ in. H20

2:12 #	θ	STATIC PRES.	Ts °F	ΔP	√ΔP	ΔH	Vm FT.³	Tm INLET	Tm OUTLET	OVEN TEMP	IMP OUTLET TEMP	VACUUM (IN Hg)
1	4.7		176	1.45		.49	322.814	81	80	254	62	1
2	4.9		175	1.6		.49	24.6	84	79	251	62	1
3	5.0		177	1.65		.49	26.4	87	80	261	62	1
4	5.1		178	1.75		.49	28.4	86	79	255	62	1
5	5.4	4.87	178	1.9		.49	30.3	88	81	254	62	1
6	5.5		178	2.0		.49	32.4	88	80	257	62	1
7	5.9		178	1.9		.49	34.5	90	80	258	62	1
8	5.1		178	1.75		.49	36.5	89	81	258	62	1
9	5.1		176	1.75		.49	38.5	88	81	255	62	1
10	4.6		173	1.4		.49	40.4	89	81	258	62	1
11	4.1		170	1.1		.49	42.2	87	79	255	62	1
12	4.1		171	1.1		.49	43.8	88	79	265	62	1
1	5.1		175	1.75		.49	345.371	81	78	267	62	1
2	5.4		177	1.9		.49	47.3	86	78	265	62	1
3	5.5		176	2.0		.49	49.3	86	77	265	62	1
4	5.5		176	2.0		.49	51.5	83	77	262	62	1
5	5.5		177	2.0		.49	53.6	82	77	262	62	1
6	5.7	4.90	176	2.1		.49	55.7	83	76	264	62	1
7	5.4		177	1.9		.49	57.8	82	76	261	62	1
8	5.2		173	1.8		.49	59.9	84	77	262	62	1
9	5.2		173	1.8		.49	61.9	84	76	266	62	1
10	4.5		174	1.35		.49	63.9	84	76	260	62	1
11	4.1		163	1.1		.49	65.6	84	77	269	62	1
12	4.1		164	1.1		.49	67.2	85	76	259	62	1
							368.764					
AV	120.2	.885	174.5	1.6564	1.2870	.49	45.958		82.02			

PARTICULATE FIELD DATA

PLANT: Kirby
DATE: 3/3/92
REPETITION: 1

.253907
3.1827572

LOCATION: Dryer Exhaust #3
OPERATOR: JS, DB, LW
STACK #: 3
SAMPLE BOX #: 2
METER BOX #: 2
AMBIENT TEMPERATURE: 65°
BAROMETRIC PRESSURE: 30.3
ASSUMED MOISTURE: 15%
PROBE LENGHT: 5'
NOZZLE DIAMETER: .136, .137, .138 (Ave. .137)
STACK DIAMETER: 41½"
METER H : 1.764806
C FACTOR: .84
METER CO-EFFICIENT: 1.067884

IMPINGERS

	Initial	Final
#1:	100 mls H_2O	248
#2:	100 mls H_2O	112
#3:	—	4
#4:	200 grms S.Gel	212.4
#5:	—	
		176.4

COMMENTS:

	CO_2	O_2
A	1%	20%
B	1%	20%

FILTER TARE: .44840

PRE-TEST LEAK CHECK
Meter: 0.000 Cu. ft. .15 in. HG
Pitots: ✓ 2.1 in. H20
✓ 3.0

POST-TEST LEAK CHECK
Meter: 0.000 Cu. ft. 4 in. HG
Pitots ✓ 2.4 in. H20
✓ 3.8

Start 9:10

#	θ	STATIC PRES.	Ts °F	ΔP		ΔP	ΔH	Vm FT.³	Tm INLET	Tm OUTLET	OVEN TEMP.	IMP OUTLET TEMP.	VACUUM (IN HG)
A1	4.9	+.89	168	1.4			.38	448.821	77	75	258	68	1
2	5.4		173	1.7			.38	450.53	82	77	267	68	1
3	5.5		176	1.8			.38	452.42	86	79	269	68	1
4	5.7		176	1.9			.38	454.35	91	82	263	63	1
5	5.5		178	1.8			.38	456.34	93	84	268	63	1
6	5.7		179	1.9			.38	458.27	96	86	265	63	1
7	5.4		178	1.7			.38	460.26	97	88	266	63	1
8	5.2		177	1.6			.38	462.15	98	90	265	63	1
9	4.9		176	1.4			.38	463.97	100	91	262	64	1
10	4.3		174	1.1			.38	465.69	102	91	266	64	1
11	4.1		173	.99			.38	467.79	104	94	268	64	1
12	3.9		158	.88			.38	468.63	102	94	260	64	1
B1	4.5		168	1.2			.38	469.995	102	96	258	64	1
2	5.1	+1.15	173	1.5			.38	471.57	102	96	264	64	1
3	5.1		175	1.5			.38	473.35	103	97	263	64	1
4	5.4		173	1.7			.38	475.14	104	97	264	65	1
5	5.4		174	1.7			.38	477.02	104	98	253	65	1
6	5.7		174	1.9			.38	478.91	104	99	251	65	1
7	5.5		175	1.8			.38	480.91	101	99	256	65	1
8	5.7		175	1.9			.38	482.83	100	98	258	65	1
9	5.1		176	1.5			.38	484.83	101	98	256	65	1
10	5.1		175	1.5			.38	486.61	103	98	257	62	1
11	4.2		174	1.0			.38	488.40	103	98	251	58	1
12	3.8		173	1.0			.38	489.87	106	98	255	58	1
Stop	11:14AM							491.201					
AV	121.1	+1.02	173.8	1.495		1.223	.38	42.38		95.08			

PARTICULATE FIELD DATA

PLANT: Kirby
DATE: 3-3-92
REPETITION: 2

LOCATION: Dryer Ex #3
OPERATOR: LW,
STACK #: #3
SAMPLE BOX #: 6
METER BOX #: 2
AMBIENT TEMPERATURE: 68
BAROMETRIC PRESSURE: 30.3
ASSUMED MOISTURE: 15%
PROBE LENGHT: 5'
NOZZLE DIAMETER: .137
STACK DIAMETER: 41.5"
METER H : 1.76481
C FACTOR: .84
METER CO-EFFICIENT: 1.06788

IMPINGERS

	Initial	Final
#1: 100 mls	H_2O	260
#2: 100 mls	H_2O	114
#3: —		2
#4: 200 gr	SG	214.3
#5:		190.3

COMMENTS:

CO_2	O_2
1.5%	19.5%

FILTER TARE: .44373 gr

PRE-TEST LEAK CHECK

Meter: 0.003 Cu ft. 8 in. HG
Pitots: ✓ 2.4 in. H20
✓ 6.5

POST-TEST LEAK CHECK

Meter: 0.000 Cu. ft. 5 in. HG
Pitots ✓ 2.9 in. H20
✓ 3.4

Start 11:37

#	θ	STATIC PRES.	Ts °F	ΔP	√ΔP	ΔH	Vm FT.3	Tm INLET	Tm OUTLET	OVEN TEMP	IMP OUTLET TEMP	VACUUM (IN Hg)
A1	4.93		169	1.2		.389	491.324	93	90	255	67	1.0
2	5.43		172	1.6		.389	493.0	95	90	249	68	1.0
3	5.59		173	1.7		.389	94.9	99	91	251	67	1.0
4	5.74	+.87	174	1.8		.389	96.9	101	92	261	66	1.0
5	5.59		174	1.9		.389	98.9	102	93	260	66	1.0
6	5.74		176	1.9		.389	500.9	104	94	261	67	1.0
7	5.43		176	1.7		.389	2.9	105	95	260	66	1.0
8	5.27		176	1.6		.389	4.8	104	96	259	66	1.0
9	4.93		177	1.4		.389	6.6	104	97	260	67	1.0
10	4.37		174	1.2		.389	8.4	105	97	261	66	1.0
11	4.15		162	1.0		.389	9.9	105	97	260	67	1.0
12	3.91		147	0.81		.389	511.3	104	98	258	66	1.0
B1	4.56	12:38 12:39	168	1.1		.389	512.701	102	98	253	66	1.0
2	5.10		175	1.3		.389	14.3	104	98	260	66	1.0
3	5.10		174	1.6		.389	16.1	105	98	257	66	1.0
4	5.43		176	1.9		.389	17.9	106	99	256	66	1.0
5	5.43		176	1.8		.389	19.8	106	99	258	67	1.0
6	5.24		176	1.8		.389	21.7	107	100	256	66	1.0
7	5.59		176	1.9		.389	23.7	109	98	255	66	1.0
8	5.74		176	1.8		.389	25.6	108	100	255	66	1.0
9	5.40		175	1.7		.389	27.6	110	100	251	67	1.0
10	5.16		175	1.6		.389	29.4	110	101	255	66	1.0
11	4.15		174	1.3		.389	31.2	108	100	248	66	1.0
12	4.03		173	1.0		.389	32.7	107	100	248	67	1.0
							534.089					
ΔV	122.19	.87	172.7	1.505	1.227	.389	42.765		100.1			

12:38 12:39

power out 1:29

1:34

1:45 pm 3:40 100 47:48 12:39 6:27

PARTICULATE FIELD DATA

PLANT: Kirby
DATE: 3-3-92
REPETITION: 3

LOCATION: Dryer Exhaust #3
OPERATOR: DB, LW, JS
STACK ~~#~~ 3 Dryer
SAMPLE BOX #:
METER BOX #: 2
AMBIENT TEMPERATURE: 77
BAROMETRIC PRESSURE: 30.3
ASSUMED MOISTURE: 15%
PROBE LENGHT: 5'
NOZZLE DIAMETER: .137
STACK DIAMETER: 41.5"
METER H : 1.76481
C FACTOR: .84
METER CO-EFFICIENT: 1.06788

IMPINGERS

	Initial	Final
#1:	100 mls H_2O	247
#2:	100 mls H_2O	104
#3:	—	2
#4:	200 gr SG	216.2
#5:		169.2

COMMENTS:

CO_2 1% O_2 19.0 %

FILTER TARE: .45638 gr

PRE-TEST LEAK CHECK
Meter: 0.013 Cu. ft. 10 in. HG
Pitots: ✓ 3.4 in. H20
✓ 3.1

POST-TEST LEAK CHECK
Meter: 0.013 Cu. ft. 6 in. HG
Pitots ✓ 9.2 in. H20
4.7

Power Down 2:12pm 2:10 pm

#	θ	STATIC PRES.	Ts °F	ΔP	√ΔP	ΔH	Vm FT³	Tm INLET	Tm OUTLET	OVEN TEMP	IMP OUTLET TEMP	VACUUM (IN HG)
A 1	4.56		176	1.2		.389	532.221	97	96	256	64	1.0
2	5.27		173	1.6		.389	33.8	97	93	261	69	1.0
3	5.43		174	1.9		.389	35.7	99	93	268	60	1.0
4	5.59		176	1.9		.389	37.6	100	93	270	57	1.0
5	5.74		177	1.9		.389	39.5	102	94	262	57	1.0
6	5.74	+.91	176	1.8		.389	41.5	104	95	258	55	1.0
7	5.43		178	1.9		.389	43.5	104	96	262	54	1.0
8	5.85		175	1.7		.389	45.4	105	96	262	55	1.0
9	4.93		174	1.5		.389	47.3	106	97	261	56	1.0
10	4.56		173	1.5		.389	49.0	107	98	266	56	1.0
11	4.19		168	1.2		.389	50.6	107	98	266	56	1.0
12	3.77		145	.82		.389	52.1	106	98	263	55	1.0
B 1	4.37	3:23 ~~3:25~~	168	1.2		.389	553.381	102	98	264	56	1.0
2	4.89		173	1.4		.389	54.9	105	98	260	63	1.0
3	5.27		176	1.6		.389	56.6	106	98	260	60	1.0
4	5.74		176	1.7		.389	58.4	107	99	253	61	1.0
5	5.59		176	1.8		.389	60.5	109	100	256	64	1.0
6	5.59		176	1.9		.389	62.4	108	100	260	64	1.0
7	5.74		177	1.9		.389	64.4	108	100	263	65	1.0
8	5.59		178	1.8		.389	66.4	107	100	256	66	1.0
9	5.43		178	1.7		.389	68.3	106	100	255	68	1.0
10	5.27		170	1.5		.389	70.2	107	100	259	65	1.0
11	4.75		163	1.1		.389	72.1	107	100	257	63	1.0
12	3.97		169	1.0		.389	73.7	107	100	267	63	1.0
							575.037					
Av	122.02		172.7	1.545	1.243		42.816	101.1				

3:23 pm 3:25 3:27

PARTICULATE FIELD DATA

PLANT: Kirby Forest Ind.
DATE: 3/2/92
REPETITION: 1

LOCATION: Dryer Exhaust #4
OPERATOR: JS, DB
STACK #: 4
SAMPLE BOX #: 1
METER BOX #: 6
AMBIENT TEMPERATURE: 65°
BAROMETRIC PRESSURE: 30.4
ASSUMED MOISTURE: 15%
PROBE LENGHT: 5'
NOZZLE DIAMETER: .133, .132, .134 (Ave .133) (.00009648)
STACK DIAMETER: 41½"
METER H : 1.891962
C FACTOR: .84
METER CO-EFFICIENT: .9786262

IMPINGERS

	Initial	Final
#1: 100 mls H_2O		256
#2: 100 mls H_2O		117
#3: —		3
#4: 200 grms S.G		210.4
#5: —		186.4

COMMENTS:

CO_2	O_2
2%	19.5%

FILTER TARE: .45856

PRE-TEST LEAK CHECK
Meter: 0.014 Cu. ft. 15 in. HG
Pitots: ✓ .85 .165 in. H20

POST-TEST LEAK CHECK
Meter: 0.011 Cu. ft. 14 in. HG
Pitots ✓ 1.2 2.2 in. H20

Start 10:54

÷	θ	STATIC PRES.	Ts °F	ΔP	√ΔP	ΔH	Vm FT.	Tm INLET	Tm OUTLET	OVEN TEMP	IMP OUTLET TEMP	VACUUM (IN Hg)
A1	4.8		161	1.4		.45	96.420	72	73	251	66	1
2	5.1	+1.2	169	1.6		.45	98.17	79	73	259	66	1
3	5.4		168	1.8		.45	100.02	83	75	261	66	1
4	5.5		170	1.9		.45	101.99	82	75	252	66	1
5	5.5		171	1.9		.45	103.99	85	77	255	67	1
6	5.8		172	2.1		.45	106.00	85	77	252	67	1
7	6.1		172	2.2		.45	108.11	86	78	252	67	1
8	6.1		172	2.2		.45	110.33	86	78	251	67	1
9	5.2		172	1.7		.45	112.56	86	79	253	67	1
10	5.8		170	2.1		.45	114.45	87	80	255	68	1
11	5.2		169	1.7		.45	116.56	87	81	263	68	1
12	4.6		158	1.1		.45	118.46	87	80	259	68	1
B1	4.9	11:59	166	1.5		.45	119.920	83	82	251	68	1
2	5.2		171	1.7		.45	121.70	86	80	250	68	1
3	5.2		171	1.7		.45	123.60	86	80	253	68	1
4	6.0		171	2.2		.45	125.49	86	80	256	68	1
5	6.0		172	2.2		.45	127.68	87	80	251	68	1
6	6.0		172	2.2		.45	129.86	88	80	254	68	1
7	5.7		173	2.0		.45	132.05	89	82	251	68	1
8	5.2		171	1.7		.45	134.12	89	82	255	68	1
9	5.4		173	1.8		.45	136.02	89	83	264	68	1
10	5.1		170	1.6		.45	137.99	89	82	256	68	1
11	4.0		169	1.1		.45	139.84	89	82	262	68	1
12	3.8		163	.95		.45	141.30	90	83	254	68	1
1:11 PM							142.691					
Av		+1.2	169.4	1.744	1.3207	.45	46.271		82.46			

End 1:11 PM

127 min.

PARTICULATE FIELD DATA

PLANT: Kirby
DATE: 3/2/92
REPETITION: 2

LOCATION: Dryer Exhaust #4
OPERATOR: JS, DB
STACK #: 4
SAMPLE BOX #: 7
METER BOX #: 6
AMBIENT TEMPERATURE: 70°
BAROMETRIC PRESSURE: 30.4
ASSUMED MOISTURE: 15%
PROBE LENGHT: 5'
NOZZLE DIAMETER: .133
STACK DIAMETER: 41½"
METER H : 1.891962
C FACTOR: .84
METER CO-EFFICIENT: .9786262

IMPINGERS

	Initial	Final
#1: 100 mls H_2O		226
#2: 100 mls H_2O		106
#3: -		4
#4: 200 grms Si Gel		212.5
#5:		148.5

COMMENTS:

CO_2	O_2
1%	19%

FILTER TARE: .45338

PRE-TEST LEAK CHECK
Meter: 0.009 Cu. ft. .15 in. HG
Pitots: ✓ .85 in. H20
✓ .75

POST-TEST LEAK CHECK
Meter: 0.009 Cu. ft. 5 in. HG
Pitots ✓ in. H20

2:25

#	θ	STATIC PRESS	Ts °F	ΔP	√ΔP	ΔH	Vm FT³	Tm INLET	Tm OUTLET	OVEN TEMP	IMP OUTLET TEMP	VACUUM (IN HG)
1	3.6	4	165	1.1		.45	142.868	77	77	250	68	1
2	4.4		168	1.4		.45	144.17	80	76	253	68	1
3	4.7		168	1.6		.45	145.78	82	76	259	68	1
4	4.7		170	1.6		.45	147.49	83	76	260	69	1
5	4.7		170	1.6		.45	149.20	85	77	264	69	1
6	4.8		170	1.7		.45	150.91	85	78	261	70	1
7	5.2		171	2.0		.45	152.66	86	79	265	70	1
8	5.2		171	2.0		.45	154.56	87	79	265	70	1
9	4.8	+1.3	171	1.7		.45	156.45	87	79	269	70	1
10	3.7		172	1.1		.45	158.20	87	79	266	70	1
11	4.7		167	1.6		.45	159.55	87	80	269	70	1
12	3.6		158	1.1		.45	161.26	88	81	265	70	1
1	3.6		169	.95		.45	162.578	83	81	250	70	1
2	4.4		170	1.4		.45	163.89	87	82	260	70	1
3	4.5		171	1.5		.45	165.49	89	82	251	70	1
4	5.0		171	1.8		.45	167.13	88	82	259	70	1
5	4.8		172	1.7		.45	168.95	88	82	267	70	1
6	4.8		172	1.7		.45	170.70	89	82	257	70	1
7	5.6		171	2.2		.45	172.45	89	82	259	70	1
8	5.4	+1.0	172	2.0		.45	174.49	89	82	259	70	1
9	4.8		171	1.7		.45	176.46	88	82	263	70	1
10	4.7		170	1.6		.45	178.21	87	82	256	71	1
11	4.4		168	1.4		.45	179.92	87	81	263	71	1
12	3.7		159	1.1		.45	181.52	87	80	259	71	1
							182.872					
Av		+1.15	169.1	1.545	1.243	.45	40.004		82.92			

109.8 min

PARTICULATE FIELD DATA

PLANT: Kirby
DATE: 3/2/92
REPETITION: 3

LOCATION: Dryer Exhaust #4
OPERATOR: JS, DB
STACK #: 4
SAMPLE BOX #: 3
METER BOX #: 6
AMBIENT TEMPERATURE: 70°
BAROMETRIC PRESSURE: 30.4
ASSUMED MOISTURE: 15%
PROBE LENGHT: 5'
NOZZLE DIAMETER: .133
STACK DIAMETER: 41½"
METER H : 1.891962
C FACTOR: .84
METER CO-EFFICIENT: .9786262

IMPINGERS

	Initial	Final
#1:	100 mls H_2O	256
#2:	100 ml H_2O	111
#3:	—	3
#4:	200 grms Si Gel	214.7
#5:	—	
		184.7

COMMENTS:

CO_2	O_2
1.5%	19%

FILTER TARE: .44803

PRE-TEST LEAK CHECK
Meter: 0.089 Cu. ft. .15 in. HG
Pitots ✓ 1.8 in. H2O
✓ .7

POST-TEST LEAK CHECK
Meter: 0.005 Cu. ft. .5 in. HG
Pitots ✓ 2.2 in. H2O
1.8

Start 450 pm

#	θ	STATIC PRES.	Ts °F	ΔP	√ΔP	ΔH	Vm FT.3	Tm INLET	Tm OUTLET	OVEN TEMP.	IMP OUTLET TEMP.	VACUUM (IN HG)
A1	4.5	+1.1	161	1.5		.45	183.059	72	75	250	70	1
2	4.5		164	1.5		.45	184.69	80	76	255	70	1
3	4.7		167	1.6		.45	186.33	81	76	262	70	1
4	4.8		168	1.7		.45	188.05	82	76	258	70	1
5	5.0		169	1.8		.45	189.79	82	76	259	70	1
6	5.1		170	1.9		.45	191.62	82	77	260	70	1
7	5.6		170	2.3		.45	193.47	83	76	258	70	1
8	5.4		171	2.1		.45	195.51	84	76	265	70	1
9	5.4		171	2.1		.45	197.48	84	77	260	70	1
10	4.9		168	1.7		.45	199.45	84	77	262	70	1
11	4.7		168	1.6		.45	201.20	84	76	264	70	1
12	4.4		168	1.4		.45	202.91	84	77	262	70	1
B1	4.7		163	1.6		.45	204.518	79	76	255	70	1
2	4.8		167	1.7		.45	206.23	82	75	253	70	1
3	5.1		167	1.9		.45	207.98	82	75	253	70	1
4	5.4		171	2.1		.45	209.83	83	75	256	70	1
5	5.4		164	2.1		.45	211.80	82	75	256	70	1
6	5.4		170	2.1		.45	213.77	82	75	253	70	1
7	5.4		172	2.1		.45	215.74	82	75	256	70	1
8	5.4		170	2.1		.45	217.70	81	75	255	70	1
9	5.0		169	1.8		.45	219.67	81	74	251	70	1
10	4.8		169	1.7		.45	221.49	81	75	256	70	1
11	4.7		166	1.6		.45	223.24	81	75	261	70	1
12	4.7		167	1.6		.45	224.95	81	75	259	70	1
							226.670					
AV			167.9	1.809	1.345	.45	43.611		78.63			

119.7 min

PARTICULATE FIELD DATA

Vel = 80.61 vmstd 39.30 md = 29.02

19.45

ms = 27.37 15.14% moisture

Ps = 30.37 Ps = 7.0134

msPs = 831.34 Ts 623.5

PLANT: Kirby
DATE: 3-2-92
REPETITION: 1

LOCATION: Dryer Ex #5
OPERATOR: LW, JB
STACK #: Dryer #5
SAMPLE BOX #: 6
METER BOX #: 2
AMBIENT TEMPERATURE: 62
BAROMETRIC PRESSURE: 30.3
ASSUMED MOISTURE: 15%
PROBE LENGHT: 8'
NOZZLE DIAMETER: .127, .132, .130 (.1297)
STACK DIAMETER: 41.5"
METER H : 1.76481
C FACTOR: .84
METER CO-EFFICIENT: 1.06788

IMPINGERS

	Initial	Final
#1:	100 mls H_2O	232
#2:	100 mls H_2O	107
#3:	—	3
#4:	200 gr SG	212.7
#5:		154.7

COMMENTS:

CO_2 1.5% O_2 19.5% 10:15 Am

FILTER TARE: .44938 gr.

PRE-TEST LEAK CHECK

Meter: 0.005 Cu. ft. 15 in. HG
Pitots: 2.5 in H20
9:45 Am 2.1 Run

POST-TEST LEAK CHECK

Meter: 0.010 Cu. ft. 6 in. HG
Pitots ✓ 2.2 in. H20
✓ 2.7

#	θ	STATIC PRES.	Vm	ΔP	√ΔP	ΔH	Vm FT³	Tm INLET	Tm OUTLET	OVEN TEMP	IMP OUTLET TEMP	VACUUM (IN Hg)
A 1	4.55		175	1.5		.31	336.281	66	65	263	65	1.0
2	4.82		161	1.7		.31	37.7	71	66	265	65	1.0
3	4.91		162	2.0		.31	39.2	75	68	264	63	1.0
4	5.09	+.92	164	2.0		.31	40.7	79	70	260	64	1.0
5	5.41		164	1.9		.31	42.3	82	72	257	64	1.0
6	5.49		165	2.0		.31	44.0	84	75	256	64	1.0
7	5.57		165	2.0		.31	45.7	86	76	253	64	1.0
8	5.99		165	2.0		.31	47.5	88	78	255	65	1.0
9	5.25		166	1.9		.31	49.2	87	79	259	66	1.0
10	4.64		163	1.3		.31	50.8	87	80	239	67	1.0
11	4.55		157	1.1		.31	52.3	88	81	268	67	1.0
12	3.94		142	0.71		.31	53.7	88	81	255	68	1.0
B 1	4.55	10:45 / 12:00	163	2.0		.31	354.954	83	82	265	68	1.0
2	4.73		165	2.1		.31	56.4	85	80	264	67	1.0
3	4.91		165	1.8		.31	57.9	87	81	266	66	1.0
4	5.25	+1.1	165	2.8		.31	59.4	88	82	263	67	1.0
5	5.09		166	1.9		.31	61.0	88	83	262	67	1.0
6	5.17		167	1.7		.31	62.6	90	83	258	68	1.0
7	5.87		164	1.9		.31	64.2	90	84	258	65	1.0
8	5.80		167	2.0		.31	66.1	91	85	263	65	1.0
9	5.33		167	1.6		.31	67.9	90	85	264	66	1.0
10	4.73		165	1.4		.31	69.6	91	86	264	67	1.0
11	4.15		160	1.1		.31	71.0	91	86	265	67	1.0
12	4.05		159	1.1		.31	72.3	91	86	264	68	1.0
Stop	12:00						373.606					
Av		1.01	163.4	1.669	1.292	.31	37.325		82.5			

119.34 min

PARTICULATE FIELD DATA

PLANT: Kirby
DATE: 3-2-92
REPETITION: 2

LOCATION: Dryer Ex #5
OPERATOR: LW, JB
STACK #: Ex #5
SAMPLE BOX #: 3
METER BOX #: 2
AMBIENT TEMPERATURE: 70
BAROMETRIC PRESSURE: 30.3
ASSUMED MOISTURE: 15%
PROBE LENGHT: 8
NOZZLE DIAMETER: .129667"
STACK DIAMETER: 41.5
METER H : 1.76481
C FACTOR: .84
METER CO-EFFICIENT: 1.06788

IMPINGERS

	Initial	Final
#1:	100 mls H_2O	229
#2:	100 mls H_2O	105
#3:	—	3
#4:	200 gr SG	211.2
#5:		148.2

COMMENTS:

CO_2 1% O_2 19% 2:50 pm

FILTER TARE: .45342 gr

PRE-TEST LEAK CHECK
Meter: 0.005 Cu. ft. 8 in. HG
Pitots: ✓ .29 in. H2O
1.81 pm ✓ 4.0

POST-TEST LEAK CHECK
Meter: 0.005 Cu. ft. 8 in. HG
Pitots ✓ 3.1 in. H2O
✓ 2.8

#	θ	STATIC PRES.	Ts °F	ΔP	√ΔP	ΔH	Vm	Tm INLET	Tm OUTLET	OVEN TEMP	IMP OUTLET TEMP	VACUUM (IN HG)
B1	4.72		165	1.4		.31	~~373.918~~	84	84	253	66	1.0
2	5.03		166	1.5		.31	75.2	84	80	262	64	1.0
3	5.46		167	1.8		.31	76.8	87	81	268	64	1.0
4	5.46	+.87	167	1.8		.31	78.5	90	83	267	64	1.0
5	5.32		167	2.0		.31	80.2	90	84	268	64	1.0
6	5.46		168	2.0		.31	81.8	91	85	266	66	1.0
7	5.59		168	2.0		.31	83.6	94	86	268	64	1.0
8	5.59		168	2.1		.31	85.3	94	87	267	64	1.0
9	5.31		167	2.0		.31	87.1	93	87	270	66	1.0
10	4.39		166	1.7		.31	88.7	91	87	271	66	1.0
11	3.62		159	1.0		.31	90.1	92	87	272	65	1.0
12	3.45		160	1.0		.31	91.2	91	86	270	65	1.0
A 1	5.46	0:38 5:34	158	1.8		.31	92.3	86	86	269	65	1.0
2	5.59		165	1.8		.31	94.0	89	85	249	66	1.0
3	5.17		164	2.0		.31	95.8	90	85	262	66	1.0
4	5.46		164	2.3		.31	97.4	91	85	275	66	1.0
5	5.32		166	2.1		.31	99.0	91	85	264	67	1.0
6	5.03		165	2.0		.31	400.7	91	85	263	68	1.0
7	5.32		167	1.9		.31	2.4	91	85	264	67	1.0
8	5.59	+1.0	167	1.8		.31	4.1	91	86	266	68	1.0
9	4.88		167	1.8		.31	5.9	93	87	261	68	1.0
10	4.56		165	1.0		.31	7.4	93	87	260	67	1.0
11	3.70		160	1.0		.31	8.9	93	88	261	68	1.0
12	3.45		153	0.82		.31	10.0	93	88	255	68	1.0
							411.089					
Av	120.92	+.94	164.5	1.661	1.289	.31	37.377		87.96			

Stop - 3:35 pm

PARTICULATE FIELD DATA

PLANT: Kirby
DATE: 3-2-92
REPETITION: 3

LOCATION: Dryer Ex. #5
OPERATOR: LW, JB
STACK #: Dryer Ex #5
SAMPLE BOX #: 6
METER BOX #: 2
AMBIENT TEMPERATURE: 69
BAROMETRIC PRESSURE: 30.3
ASSUMED MOISTURE: 15%
PROBE LENGHT: 5'
NOZZLE DIAMETER: .129667"
STACK DIAMETER: 41.5"
METER H : 1.76481
C FACTOR: .84
METER CO-EFFICIENT: 1.06788

IMPINGERS

	Initial	Final
#1:	100 ml/s H_2O	224
#2:	100 ml/s H_2O	104
#3:	—	2
#4:	200 gr SG	213.2
#5:		143.2

COMMENTS:

CO_2	O_2	
1.5%	19%	5:30 pm

FILTER TARE: .47040 gr

PRE-TEST LEAK CHECK
Meter: 0.018 Cu. ft. 19 in. HG
Pitots: ✓ 3.2 in. H20
4:38 pm ✓ 3.4

POST-TEST LEAK CHECK
Meter: 0.011 Cu. ft. 9 in. HG
Pitots ✓ in. H20

#	θ	STATIC PRES.	Ts °F	ΔP	√ΔP	ΔH	Vm FT.³	Tm INLET	Tm OUTLET	OVEN TEMP.	IMP OUTLET TEMP.	VACUUM (IN HG)
A1	4.91		165	1.3		.31	411.263	76	76	234	63	1.0
A2	4.72		164	1.5		.31	412.8	79	75	245	64	1.0
3	5.18		164	1.8		.31	414.3	80	76	248	64	1.0
4	5.18	+.78	165	1.7		.31	15.9	83	76	265	64	1.0
5	5.46		163	1.8		.31	17.5	85	78	268	65	1.0
6	5.46		165	2.0		.31	19.2	85	78	268	66	1.0
7	5.46		164	2.1		.31	20.9	86	79	267	66	1.0
8	5.60		165	2.0		.31	22.6	86	79	271	65	1.0
9	5.46		164	1.9		.31	24.4	87	80	266	64	1.0
10	5.03		162	1.6		.31	26.1	86	80	268	63	1.0
11	4.15		160	1.1		.31	27.7	87	80	265	63	1.0
12	3.70		155	1.1		.31	28.9	86	80	267	64	1.0
B1	5.18	5:39 ~~5:40~~	163	2.0		.31	30.1	81	80	266	64	1.0
2	5.18		161	2.0		.31	31.7	85	80	262	65	1.0
3	5.46		163	2.0		.31	33.4	86	80	260	65	1.0
4	5.75		163	2.1		.31	35.1	86	80	261	65	1.0
5	5.59		164	2.1		.31	36.9	86	80	269	65	1.0
6	5.46	+.92	165	2.0		.31	38.6	86	80	262	64	1.0
7	5.32		164	1.9		.31	40.3	86	80	261	64	1.0
8	5.18		164	1.8		.31	42.0	86	80	269	64	1.0
9	5.18		163	1.8		.31	43.6	86	79	260	64	1.0
10	4.15		161	1.1		.31	45.2	85	79	265	65	1.0
11	3.62		150	1.1		.31	46.5	86	79	262	65	1.0
12	3.47		148	0.60		.31	47.7	86	79	263	66	1.0
		6:40 pm					448.751					
Δv	119.85	1.85	161.8	1.651	1.285	.31	37.488		81.73			

APPENDIX D

Thermometer Calibration

Company: Kirby
Calibrated by: J. Barrera
Date: 3/10/97
Barometric Pressure: 29.8

Meter Box #6

		Boiling H_2O		Ice H_2O			
	Thermometer	Reading	Ref. (Hg Thermo)	Reading	Ref. (Hg Thermo)	%	
Inlet	Kiethley Temp. Meter	210°F		33°F		0.30%	Boiling
	Mercury Glass Therm.		212°F		33°F	0.0%	Ice
Outlet	Kiethley Temp. Meter	210°F		33%		0.15%	Boiling
	Mercury Glass Therm.		211°F		32°F	-0.20%	Ice

$$\frac{(\text{Ref} + 460) - (\text{Test Thermo Temp} + 460)}{\text{Ref} + 460} 100 = \%$$

Thermometer Calibration

Company: Kirby
Calibrated by: J. Barrera
Date: 3/10/92
Barometric Pressure: 29.8

Meter Box # 5

		Boiling H_2O		Ice H_2O			
	Thermometer	Reading	Ref. (Hg Thermo)	Reading	Ref. (Hg Thermo)	%	
Inlet	Kiethley Temp Meter	209°F		32°F		0.15%	Boiling
	Mercury Glass Therm.		210°F		33°F	0.20%	ice
Oultet	Kiethley Temp. Meter	209°F		34°F		0.30%	Boiling
	Mecury Glass Therm.		211°F		33°F	-0.20%	Ice

$$\frac{(\text{Ref} + 460) - (\text{Test Thermo Temp} + 460)}{\text{Ref} + 460} 100 = \%$$

Thermometer Calibration

Company: Kirby
Calibrated by: J. Barrera
Date: 3/10/92
Barometric Pressure: 29.8

Meter Box # 2

		Boiling H_2O		Ice H_2O			
	Thermometer	Reading	Ref. (Hg Thermo)	Reading	Ref. (Hg Thermo)	%	
Inlet	Kiethley Temp. Meter	210		34°F		0.30%	Boiling
	Mercury Glass Therm.		212°F		33°F	-0.20%	Ice
Outlet	Kiethley Temp. Meter	209		33°F		-0.20%	Boiling
	Mercury Glass Therm		212°F		32°F	0.45%	Ice

$$\frac{(\text{Ref} + 460) - (\text{Test Thermo Temp} + 460)}{\text{Ref} + 460} 100 = \%$$

Thermometer Calibration

Company: Kirby
Calibrated by: J. Barrera
Date: 3/10/92
Barometric Pressure: 29.8

Probe # 162 Thermocouple

		Boiling H_2O		Ice H_2O			
	Thermometer	Reading	Ref. (Hg Thermo)	Reading	Ref. (Hg Thermo)	%	
Probe #1 Thermo-Couple	Kiethley Temp. meter	210°F		32°F		0.14%	Boiling
	Mercury Glass Therm.		211°F		33°F	0.20%	Ice
Probe #2 Thermo-Couple	Kiethley Temp. Meter	210°F		34°F		0.30%	Boiling
	Mercury Glass Temp.		212°F		33	-0.20%	Ice

$$\frac{(\text{Ref} + 460) - (\text{Test Thermo Temp} + 460)}{\text{Ref} + 460} 100 = \%$$

SCALE CALIBRATIONS

METTLER AE 163 Digital Scale

Serviced and Calibrated by
ASC/ALDINGER CO.
DALLAS, TEXAS 214-827-1200

Technician
MARION D. MUEHL

DATE	SERIAL NO.
12-30-91	E48169

Next Service Due:
12-92

OHAUS	147.5 Actual	Scale wt. = 147.4998g
"	50.0 Actual	Scale wt = 50.0002g
"	20.0 Actual	Scale wt = 20.0000g
"	10.0 Actual	Scale wt = 10.0001g
"	5.0 Actual	Scale wt = 5.0001
"	1.0 Actual	Scale wt = 1.0000g

Sargent Welch model TL 12000-DR

OHAUS	147.5 Actual	Scale wt = 147.5g
"	295.0 Actual	Scale wt = 295.0g
"	200.0 Actual	Scale wt = 200.1 g

Thermometer Calibration

Company: Armstrong Environmental
Calibrated by: M.T.
Date: 2-22-92
Barometric Pressure: 29.8

All reading F° Probe 2

Extech Instruments.
K Thermocouple Checker

	Boiling H_2O		Ice H_2O		
Thermometer	Reading	Ref. (Hg Thermo)	Reading	Ref. (Hg Thermo)	%
Kiethley 873F	209°		31°		99.5% / 99%
Fluke 51	210°		38°		99% / 94.5
Mercury Glass		207°		35°	
K-Thermocouple Checker		212°		35°	

K-Checker

Mercury

(Ref + 460) - (Test Thermo Temp + 460) 100=%
Ref + 460

Thermometer Calibration

Company: Armistrong Environmental
Calibrated by: M.T.
Date: 2-22-92
Barometric Pressure: 29.8 Probe 1

All reading F°

Fluke Instruments
K-Thermocouple Checker

Thermometer °F	Boiling H_2O Reading	Boiling H_2O Ref. (Hg Thermo)	Ice H_2O Reading	Ice H_2O Ref. (Hg Thermo)	%
Keithly 873F	209°		36°		98.5% 99%
Fluke 51	210°		38°		99% 98.5%
Mercury Glass		207°		35°	
[illegible]		212°		35°	

K-Thermocouple / Mercury

(Ref + 460) - (Test Thermo Temp + 460) 100=%
Ref + 460

PITOT TUBE INSPECTION DATA SHEET

Company Name: Armstrong Env

Pre-sample Date 2-24-92

Post Sample Date 3/9/92

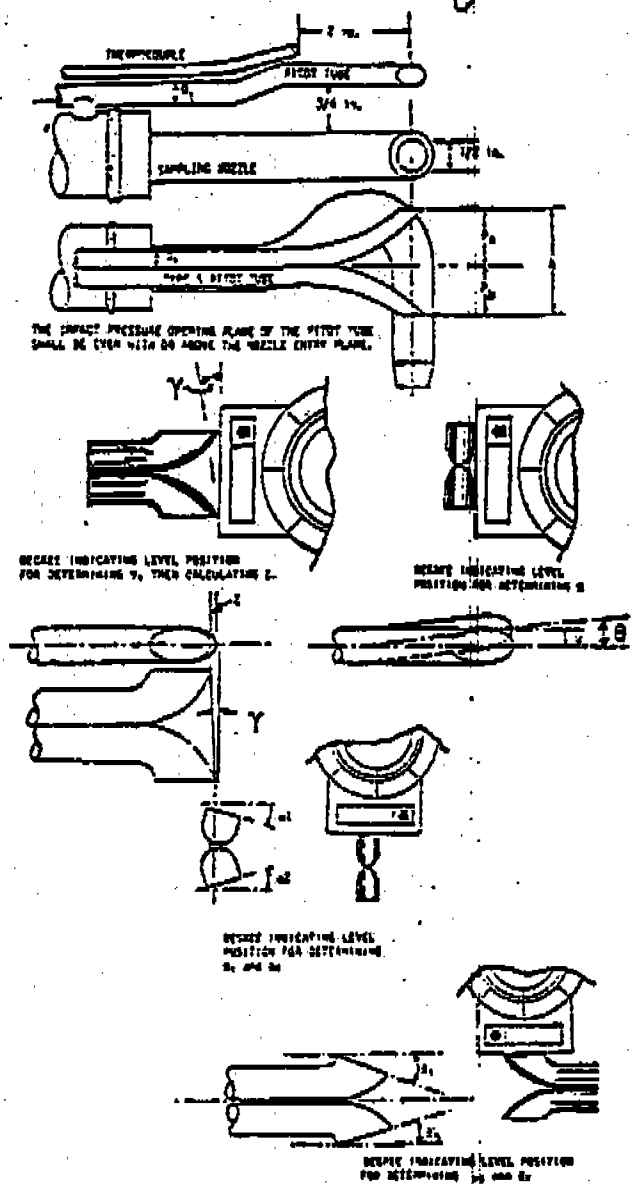

Pre-sample		Post Sample
✓	level?	✓
NO	obstructions?	None
NO	damaged?	NO
3°	$-10° < \alpha_1 < +10°$	3°
7°	$-10° < \alpha_2 < +10°$	6°
3°	$-5° < \beta_1 < +5°$	3°
1°	$-5° < \beta_2 < +5°$	1°
1°	γ	1°
2°	θ	2°
0.75	A	.76
0.375	$1.05\ D_t < P_a < 1.5\ D_t$	.38
0.375	$1.05\ D_t < P_b < 1.5\ D_t$	.34
1/4"	$3/16" \leq D_t \leq 3/8"$	1/4"
0.013	$A \tan \gamma < 0.125"$	0.0133
0.026	$A \tan \theta < 0.03125"$	.0265
Yes	$P_a = P_b \pm 0.063"$	Yes

Comments: _____

Pitot tube/probe number 2 meets or exceeds all specifications criteria and/or applicable design features* and is hereby assigned a pitot tube calibration factor of 0.84.

Signature Jeff Lovell

Date 2-24-92

Joe Barnes 3/9/92

*See 40 CFR 60, Vol. 42, No. 160, Method 2. Verify the minimum 2 inch setback of the thermocouple and the minimum 3/4 inch separation between the pitot tube and the nozzle as shown at the top of this page.

91/13

PITOT TUBE INSPECTION DATA SHEET

Company Name: Armstrong Env.

Pre-sample Date 2-24-92

Post Sample Date 3/9/92

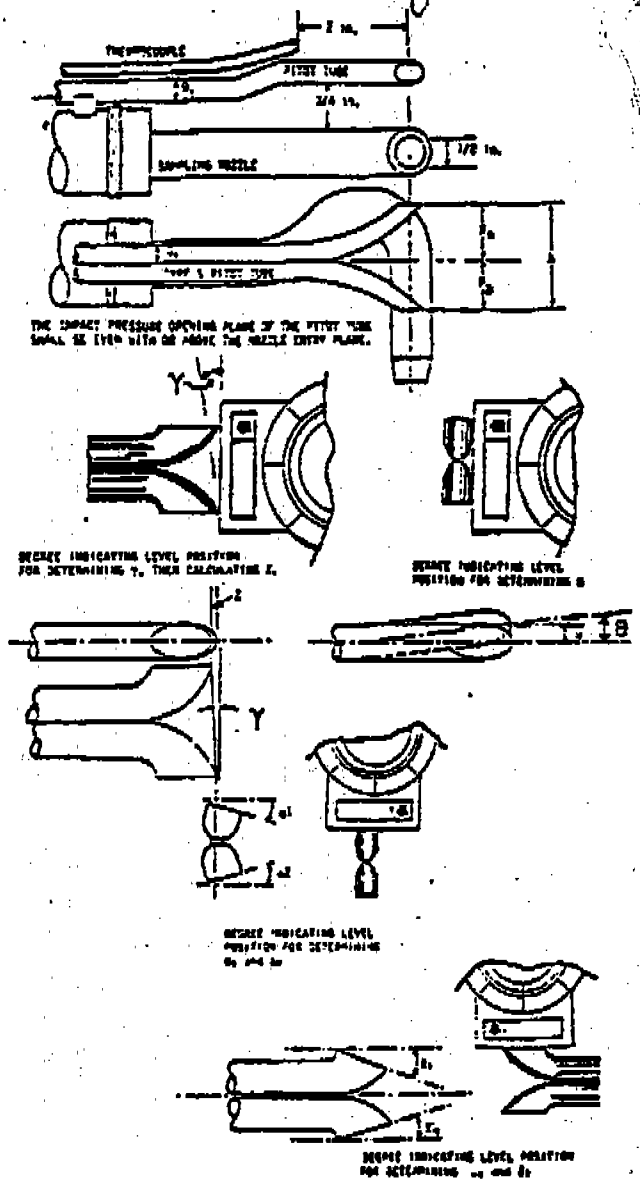

Yes	level?	Yes
No	obstructions?	Minor
No	damaged?	Top
0°	$-10° < \alpha_1 < +10°$	-3°
0°	$-10° < \alpha_2 < +10°$	-6°
2°	$-5° < \beta_1 < +5°$	+4°
2°	$-5° < \beta_2 < +5°$	+3°
3°	γ	2°
1°	θ	3°
0.625	A	0.562
.313	$1.05\ D_t < P_a < 1.5\ D_t$	0.28075
.313	$1.05\ D_t < P_b < 1.5\ D_t$	0.28125
1/4"	$3/16" \leq D_t \leq 3/8"$	✓
0.3275	$A \tan \gamma < 0.125"$	Yes
0.0191	$A \tan \theta < 0.03125"$	Yes
✓	$P_a = P_b \pm 0.063"$	Yes

Comments: Damaged on tip of pitot, circular section

Pitot tube/probe number 1 meets or exceeds all specifications criteria and/or applicable design features* and is hereby assigned a pitot tube calibration factor of 0.84.

Signature [illegible]

Date 2-24-92

*See 40 CFR 60, Vol. 42, No. 160, Method 2. Verify the minimum 2 inch setback of the thermocouple and the minimum 3/4 inch separation between the pitot tube and the nozzle as shown at the top of this page.

[illegible] 3/9/92

SUMMARY OF PRE METER BOX CALIBRATION

METER BOX NUMBER: 5
CALIBRATION DATE:2/6/92
CALIBRATED BY:DAN BARRERA
BAROMETRIC PRESSURE: 29.6

```
*****************************************************
*                                                   *
*      DELTA H = ORFICE PRESSURE                    *
*      VW = VOLUME OF WET GAS METER                 *
*      TW = AVERAGED TEMPERATURE OF WET METER       *
*      VD = VOLUME OF DRY GAS METER                 *
*      TD = AVERAGED TEMPERATURE OF DRY GAS METER   *
*      TIME = DURATION OF EACH POINT RUN            *
*                                                   *
*****************************************************
```

POINT 1
VD = 5.236 TD = 59.5 TIME = 10.309 TEST METER Y = .998
METER BOX Y = .9657782
METER BOX H = 1.148643

POINT 2
VD = 5.309 TD = 64.25 TIME = 7.107 TEST METER Y = 1.003
METER BOX Y = .9638851
METER BOX H = 1.08405

POINT 3
VD = 10.706 TD = 69.5 TIME = 12.261 TEST METER Y = 1.003
METER BOX Y = .9629316
METER BOX H = 1.201441

POINT 4
VD = 10.711 TD = 72.75 TIME = 10.782 TEST METER Y = 1.002
METER BOX Y = .9662285
METER BOX H = 1.231206

POINT 5
VD = 10.579 TD = 76.25 TIME = 8.916001 TEST METER Y = .997
METER BOX Y = .9759559
METER BOX H = 1.258311

POINT 6
VD = 10.562 TD = 78.25 TIME = 7.914 TEST METER Y = .997
METER BOX Y = .9787592
METER BOX H = 1.316927

AVERAGE Y = .9689231
AVERAGE H = 1.206763

Meter Box Calibration

Dry Gas Meter #: 5
Calibrated by: DB
Date: 2-6-92
Barometric Pressure: 29.6

Orifice ΔH	Test Meter Volume V_w	Dry Gas Meter Volume V_d	Temperature				Time θ	γ	ΔH@
			Test Meter T_w	Dry Gas Meter Inlet T_{di}	Dry Gas Meter Outlet T_{do}	Dry Gas Meter Ave T_d			
.5	5	5.236	52	57/65	57/59	59.5	10.309	.998	
1.0	5	5.309	52.5	62/70	62/63	64.25	7.107	1.003	
1.5	10	10.706	53.25	68/77	64/69	69.5	12.261	1.003	
2.0	10	10.711	53.25	73/78	69/71	72.75	10.782	1.002	
3.0	10	10.579	54	75/83	72/75	76.25	8.916	.997	
4.0	10	10.562	54	78/84	75/76	78.25	7.914	.997	

$$\gamma = \frac{V_w P_{bar} (T_d + 460)}{V_d \left(P_{bar} + \frac{\Delta H}{13.6}\right) (T_w + 460)}$$

$$\Delta H@ = \frac{0.0317\ \Delta H}{P_{bar}(T_d + 460)} \left[\frac{(T_w + 460)\ \theta}{V_w} \right]^2$$

P_{bar} = Barometric Pressure

ARMSTRONG ENVIRONMENTAL, INC.

DRY GAS METER #: 5

DATE: 2-6-92

ΔH	VW	TW	VD	TDT	TDO	ΔTD	θ
.5 (5FT.^{3})	705.00	52/51	334.069	57	57		
	700.00	53/52	328.833	65	59		10.309
	5	52	5.236		→	59.5	
1.0 (5FT^3)	710.00	53/52	339.378	62	62		
	705.00	53/52	334.069	70	63		7.107
	5	52.5	5.309		→	64.25	
1.5 (10 FT^3)	720.00	53/53	350.084	68	64		
	710.00	54/53	339.378	77	69		12.261
	10	53.25	10.706		→	69.5	
2.0 (10FT^3)	730.00	54/53	360.795	73	69		
	720.00	54/54	350.084	78	71	72.75	10.782
	10	53.25	10.711		→		
3.0 (10FT^3)	740.00	54/54	371.374	75	72		
	730.00	54/54	360.795	83	75		8.916
	10	54	10.579		→	76.25	
4.0 (10FT^3)	750.00	54/54	381.936	78	75		
	740.00	54/54	371.374	84	76		7.914
	10	54	10.562		→	78.25	

SUMMARY OF POST METER BOX CALIBRATION

METER BOX NUMBER : 5
CALIBRATION DATE: 03/06/92
CALIBRATED BY: Dan barrera
BAROMETRIC PRESSURE (inch Hg): 29.6

```
*************************************************************
*                                                           *
*      DELTA H = ORFICE PRESSURE                            *
*      VW = VOLUME OF WET GAS METER                         *
*      TW = AVERAGED TEEMPERATURE OF WET METER              *
*      VD = VOLUME OF DRY GAS METER                         *
*      TD = AVERAGED TEMPERATURE OF DRY GAS METER           *
*      TIME = DURATION OF EACH POINT RUN                    *
*                                                           *
*************************************************************
```

POINT 1
DELTA H = 1 VW = 10 TW = 62.25
VD = 10.368 TD = 80.75 TIME = 15.33 TEST METER Y = 1.003
METER BOX Y = .9991864
METER BOX H = 1.26944

POINT 2
DELTA H = 1 VW = 10 TW = 62.25
VD = 10.558 TD = 86 TIME = 15.15 TEST METER Y = 1.003
METER BOX Y = .9907316
METER BOX H = 1.227883

POINT 3
DELTA H = 1 VW = 10 TW = 62.75
VD = 10.658 TD = 91.5 TIME = 15.09 TEST METER Y = 1.003
METER BOX Y = .9903739
METER BOX H = 1.208338

AVERAGE Y = .9934306
AVERAGE H = 1.235221

Post-Test
Meter Box Calibration

Dry Gas Meter #: 5
Calibrated by: DB
Date: 3-6-92
Barometric Pressure: 29.6

Orifice ΔH	Test Meter Volume V_w	Dry Gas Meter Volume V_d	Temperature: Test Meter T_w	Temperature: Dry Gas Meter Inlet T_{di}	Temperature: Dry Gas Meter Outlet T_{do}	Temperature: Dry Gas Meter Ave T_d	Time θ	Y	ΔH@
1.0	10	10.368	62.25	80/87	78/78	80.75	15.33	1.003	
1.0	10	10.558	62.24	83/95	79/87	86	15.15	1.003	
1.0	10	10.658	62.75	91/98	86/91	91.5	15.09	1.003	

$$Y = \frac{V_w P_{bar} (T_d + 460)}{V_d (P_{bar} + \frac{\Delta H}{13.6}) (T_w + 460}$$

$$\Delta H@ = \frac{0.0317 \Delta H}{P_{bar}(T_d + 460)} \left[\frac{(T_w + 460) \theta}{V_w}\right]^2$$

P_{bar} = Barometric Pressure

ARMSTRONG ENVIRONMENTAL, INC.

DRY GAS METER #: 5

DATE: 3-6-92

ΔH	VW	TW	VD	TDT	TDO	ΔTD	θ
1.0 (10FT^3)	167.0	62/62	580.380	80	78		
	157.0	63/62	570.012	87	78		
	10	62.25	10.368		→	80.75	15:326
1.0 (10FT^3)	177.0	63/62	590.938	83	79		
	167.0	63/62	580.380	95	87		
	10	62.5	10.558		→	86	15:149
1.0 (10FT^3)	187.0	63/62	601.596	91	86		
	177.0	63/63	590.938	98	91		
	10	62.75	10.658		→	91.5	15:091

SUMMARY OF PRE METER BOX CALIBRATION

METER BOX NUMBER: 6
CALIBRATION DATE:2/12/92
CALIBRATED BY:dan barrera
BAROMETRIC PRESSURE: 28.83

```
*****************************************************
*                                                   *
*      DELTA H = ORFICE PRESSURE                    *
*      VW = VOLUME OF WET GAS METER                 *
*      TW = AVERAGED TEMPERATURE OF WET METER       *
*      VD = VOLUME OF DRY GAS METER                 *
*      TD = AVERAGED TEMPERATURE OF DRY GAS METER   *
*      TIME = DURATION OF EACH POINT RUN            *
*                                                   *
*****************************************************
```

POINT 1
DELTA H = .5 VW= 5 TW = 59
VD = 5.293 TD = 70 TIME = 13.114 TEST METER Y = .998
METER BOX Y = .9615098
METER BOX H = 1.92209

POINT 2
DELTA H = 1 VW= 5 TW = 59.5
VD = 5.278 TD = 75 TIME = 9.279 TEST METER Y = 1.003
METER BOX Y = .9760309
METER BOX H = 1.910268

POINT 3
DELTA H = 1.5 VW= 10 TW = 59.75
VD = 10.573 TD = 79.5 TIME = 15.172 TEST METER Y = 1.003
METER BOX Y = .9809376
METER BOX H = 1.90103

POINT 4
DELTA H = 2 VW= 10 TW = 60
VD = 10.589 TD = 83.25 TIME = 13.219 TEST METER Y = 1.002
METER BOX Y = .9835569
METER BOX H = 1.912708

POINT 5
DELTA H = 3 VW= 10 TW = 60.25
VD = 10.541 TD = 86 TIME = 10.642 TEST METER Y = .997
METER BOX Y = .9851074
METER BOX H = 1.851884

POINT 6
DELTA H = 4 VW= 10 TW = 60.5
VD = 10.48 TD = 84.75 TIME = 9.206001 TEST METER Y = .996
METER BOX Y = .9846149
METER BOX H = 1.853791

AVERAGE Y = .9786262
AVERAGE H = 1.891962

Meter Box Calibration

Dry Gas Meter #: 6
Calibrated by: DB
Date: 2-12-92
Barometric Pressure: 29.83

Orifice ΔH	Test Meter Volume V_w	Dry Gas Meter Volume V_d	Temperature: Test Meter T_w	Temperature: Dry Gas Meter Inlet T_{di}	Temperature: Dry Gas Meter Outlet T_{do}	Temperature: Dry Gas Meter Ave T_d	Time θ	γ	ΔHθ
.5	5	5.293	59	67/77	67/69	70	13.114	.998	
1.0	5	5.278	59.5	72/84	71/84	75	9.279	1.003	
1.5	10	10.573	59.75	77/90	74/77	79.5	15.172	1.003	
2.0	10	10.589	60	82/93	78/80	83.25	13.219	1.002	
3.0	10	10.541	60.25	90/95	78/81	86	10.642	.997	
4.0	10	10.480	60.5	83/95	80/81	84.75	9.206	.996	

$$\gamma = \frac{V_w P_{bar} (T_d + 460)}{V_d \left(P_{bar} + \frac{\Delta H}{13.6}\right) (T_w + 460)}$$

$$\Delta H\theta = \frac{0.0317\ \Delta H}{P_{bar}(T_d + 460)} \left[\frac{(T_w + 460)\ \theta}{V_w} \right]^2$$

P_{bar} = Barometric Pressure

ARMSTRONG ENVIRONMENTAL, INC.

DRY GAS METER #: 6

DATE: 2-12-92

ΔH	VW	TW	VD	TDT	TDO	ΔTD	θ
.5(5FT.^{3})	855.00	59/58	856.597	67	67		
	850.00	60/59	851.304	77	69		13.114
	5	59	5.293		→	70	
1.0(5FT^3)	860.00	60/59	861.875	72	71		
	855.00	60/59	856.597	84	73		9.279
	5	59.5	5.278		→	75	
1.5(10 FT^3)	870.00	60/59	872.448	77	74		
	860.00	60/60	861.875	90	77		15.172
	10	59.75	10.573		→	79.5	
2.0(10FT^3)	880.00	60/60	883.037	82	78		
	870.00	60/60	872.448	93	80		13.219
	10	60	10.589		→	83.25	
3.0(10FT^3)	890.00	60/60	893.578	90	78		
	880.00	61/60	883.037	95	81		10.642
	10	60.25	10.541		→	86	
4.0(10FT^3)	900.00	61/60	904.058	83	80		
	890.00	61/60	893.578	95	81		9.206
	10	60.5	10.480		→	84.75	

SUMMARY OF POST METER BOX CALIBRATION

METER BOX NUMBER : 6
CALIBRATION DATE: 03/06/92
CALIBRATED BY: Dan
BAROMETRIC PRESSURE (inch Hg): 29.6

```
*************************************************************
*                                                           *
*      DELTA H = ORFICE PRESSURE                            *
*      VW = VOLUME OF WET GAS METER                         *
*      TW = AVERAGED TEEMPERATURE OF WET METER              *
*      VD = VOLUME OF DRY GAS METER                         *
*      TD = AVERAGED TEMPERATURE OF DRY GAS METER           *
*      TIME = DURATION OF EACH POINT RUN                    *
*                                                           *
*************************************************************
```

POINT 1
DELTA H = 1 VW = 10 TW = 59.75
VD = 10.612 TD = 71.75 TIME = 17.69 TEST METER Y = 1.003
METER BOX Y = .9645821
METER BOX H = 1.702569

POINT 2
DELTA H = 1 VW = 10 TW = 60.25
VD = 10.671 TD = 79 TIME = 17.75 TEST METER Y = 1.003
METER BOX Y = .9713931
METER BOX H = 1.694336

POINT 3
DELTA H = 1 VW = 10 TW = 60.5
VD = 10.729 TD = 83.75 TIME = 17.63 TEST METER Y = 1.003
METER BOX Y = .9741879
METER BOX H = 1.658495

AVERAGE Y = .9700543
AVERAGE H = 1.685134

Post-Test
Meter Box Calibration

Dry Gas Meter #: 6
Calibrated by: DB
Date: 3-6-92
Barometric Pressure: 29.6

Orifice ΔH	Test Meter Volume V_w	Dry Gas Meter Volume V_d	Temperature: Test Meter T_w	Temperature: Dry Gas Meter Inlet T_{di}	Temperature: Dry Gas Meter Outlet T_{do}	Temperature: Dry Gas Meter Ave T_d	Time θ	Y	ΔH@
1.0	10	10.612	59.75	68/82	66/71	71.75	17:69	1.003	
1.0	10	10.671	60.25	76/89	74/77	79	17:75	1.003	
1.0	10	10.729	60.5	82/92	80/81	83.75	17:63	1.003	

$$Y = \frac{V_w P_{bar} (T_d + 460)}{V_d (P_{bar} + \frac{\Delta H}{13.6}) (T_w + 460)}$$

$$\Delta H@ = \frac{0.0317 \Delta H}{P_{bar} (T_d + 460)} \left[\frac{(T_w + 460) \theta}{V_w} \right]^2$$

P_{bar} = Barometric Pressure

ARMSTRONG ENVIRONMENTAL, INC.

DRY GAS METER #: 6

DATE: 3-6-92

ΔH	VW	TW	VD	TDT	TDO	ΔTD	θ
1.0(10FT^3)	137.0	60/59	379.651	68	66		
	127.0	60/60	369.039	82	71		
	10	59.75	10.612		→	71.75	17.686
1.0(10FT^3)	147.0	60/60	390.322	76	74		
	137.0	61/60	379.651	89	77		
	10	60.25	10.671		→	79	17.753
1.0(10FT^3)	157.0	61/60	401.051	82	80		
	147.0	61/60	390.322	92	81		
	10	60.5	10.729		→	83.75	17.625

SUMMARY OF PRE METER BOX CALIBRATION

METER BOX NUMBER: 2
CALIBRATION DATE:2-7-92
CALIBRATED BY:DAN BARRERA
BAROMETRIC PRESSURE: 29.85

```
*****************************************************
*                                                   *
*      DELTA H = ORFICE PRESSURE                    *
*      VW = VOLUME OF WET GAS METER                 *
*      TW = AVERAGED TEMPERATURE OF WET METER       *
*      VD = VOLUME OF DRY GAS METER                 *
*      TD = AVERAGED TEMPERATURE OF DRY GAS METER   *
*      TIME = DURATION OF EACH POINT RUN            *
*                                                   *
*****************************************************
```

POINT 1
VD = 4.806 TD = 58.75 TIME = 12.804 TEST METER Y = .998
METER BOX Y = 1.053251
METER BOX H = 1.751035

POINT 2
VD = 4.778 TD = 61.25 TIME = 8.991999 TEST METER Y = 1.003
METER BOX Y = 1.069071
METER BOX H = 1.717248

POINT 3
VD = 9.608 TD = 66 TIME = 14.995 TEST METER Y = 1.003
METER BOX Y = 1.070609
METER BOX H = 1.778096

POINT 4
VD = 9.484 TD = 59.5 TIME = 12.982 TEST METER Y = 1.002
METER BOX Y = 1.068302
METER BOX H = 1.800982

POINT 5
VD = 9.448 TD = 64 TIME = 10.477 TEST METER Y = .997
METER BOX Y = 1.07206
METER BOX H = 1.749519

POINT 6
VD = 9.443 TD = 67 TIME = 9.2 TEST METER Y = .996
METER BOX Y = 1.074009
METER BOX H = 1.791957

AVERAGE Y = 1.067884
AVERAGE H = 1.764806

Meter Box Calibration

Dry Gas Meter #: 2
Calibrated by: DG
Date: 2-7-92
Barometric Pressure: 29.85

Orifice ΔH	Test Meter Volume V_w	Dry Gas Meter Volume V_d	Temperature: Test Meter T_w	Temperature: Dry Gas Meter Inlet T_{di}	Temperature: Dry Gas Meter Outlet T_{do}	Temperature: Dry Gas Meter Ave T_d	Time θ	γ	ΔHθ
.5	5	4.804	50.75	55/66	55/59	58.75	12.804	0.998	
1.0	5	4.778	50.5	59/70	57/59	61.25	8.992	1.003	
1.5	10	9.608	51	62/76	60/66	66	14.995	1.003	
2.0	10	9.484	51.25	55/71	54/58	59.5	12.982	1.002	
3.0	10	9.448	52	61/74	58/63	64	10.477	0.997	
4.0	10	9.443	52.5	64/77	63/64	67	9.2	0.996	

$$\gamma = \frac{V_w P_{bar} (T_d + 460)}{V_d \left(P_{bar} + \frac{\Delta H}{13.6}\right) (T_w + 460)}$$

$$\Delta H\theta = \frac{0.0317\ \Delta H}{P_{bar}(T_d + 460)} \left[\frac{(T_w + 460)\ \theta}{V_w} \right]^2$$

P_{bar} = Barometric Pressure

ARMSTRONG ENVIRONMENTAL, INC.

DRY GAS METER #: 2

DATE: 2-7-92

ΔH	VW	TW	VD	TDT	TDO	ΔTD	θ
.5(5FT.^{3})	805.00	51/51	176,540	55	55		
	800.00	50/51	171,734	66	59		12,804
	5	50.75	4,806		→	58.75	
1.0 (5FT^3)	810.00	50/50	181,318	59	57		
	805.00	51/51	176,540	70	59		8,992
	5	50.5	4,778		→	61.25	
1.5(10 FT^3)	820.00	51/51	190,926	62	60		
	810.00	51/51	181,318	76	66		14,995
	10	51	9,608		→	66	
2.0(10FT^3)	830.00	51/51	200,410	55	54		
	820.00	52/52	190,926	71	58		12,982
	10	51.25	9,484		→	59.5	
3.0(10FT^3)	840.00	52/52	209,858	61	58		
	830.00	52/52	200,410	74	63		10,477
	10	52	9,448		→	64	
4.0(10FT^3)	850.00	52/52	219,301	64	63		
	840.00	53/52	209,858	77	64		9,2
	10	52.5	9,443		→	67	

SUMMARY OF PRE METER BOX CALIBRATION

METER BOX NUMBER: 2
CALIBRATION DATE:3/7/92
CALIBRATED BY:BL
BAROMETRIC PRESSURE: 29.6

```
*****************************************************
*                                                   *
*      DELTA H = ORFICE PRESSURE                    *
*      VW = VOLUME OF WET GAS METER                 *
*      TW = AVERAGED TEMPERATURE OF WET METER       *
*      VD = VOLUME OF DRY GAS METER                 *
*      TD = AVERAGED TEMPERATURE OF DRY GAS METER   *
*      TIME = DURATION OF EACH POINT RUN            *
*                                                   *
*****************************************************
```

POINT 1
DELTA H = .5 VW= 5 TW = 79
VD = 5.214 TD = 81 TIME = 12.17 TEST METER Y = .998
METER BOX Y = .9593983
METER BOX H = 1.703566

POINT 2
DELTA H = 1 VW= 5 TW = 79
VD = 5.116 TD = 82 TIME = 8.67 TEST METER Y = 1.003
METER BOX Y = .9832715
METER BOX H = 1.726013

POINT 3
DELTA H = 1.5 VW= 10 TW = 79
VD = 10.43 TD = 84 TIME = 14.17 TEST METER Y = 1.003
METER BOX Y = .9669666
METER BOX H = 1.722571

POINT 4
DELTA H = 2 VW= 10 TW = 79
VD = 10.395 TD = 86 TIME = 12.5 TEST METER Y = 1.002
METER BOX Y = .9716161
METER BOX H = 1.780748

POINT 5
DELTA H = 3 VW= 10 TW = 79
VD = 10.3 TD = 88 TIME = 10.01 TEST METER Y = .997
METER BOX Y = .9768439
METER BOX H = 1.706687

POINT 6
DELTA H = 4 VW= 10 TW = 79
VD = 10.283 TD = 88 TIME = 8.92 TEST METER Y = .996
METER BOX Y = .9750733
METER BOX H = 1.806984

AVERAGE Y = .972195
AVERAGE H = 1.741095

Meter Box Calibration

Dry Gas Meter #: 2
Calibrated by: BL
Date: 3/1/92
Barometric Pressure: 29.6

Orifice ΔH	Test Meter Volume V_w	Dry Gas Meter Volume V_d	Temperature				Time θ	γ	ΔH@
			Test Meter T_w	Dry Gas Meter					
				Inlet T_{di}	Outlet T_{do}	Ave T_d			
0.5	5.0	5.214	79	82	79	81	12.17	0.998	
1.0	5.0	5.116	79	85	80	82	8.67	1.003	
1.5	10.0	10.43	79	87	82	84	12.17	1.003	
2.0	10.0	10.395	79	89	82	86	12.50	1.002	
3.0	10.0	10.300	79	93	82	88	10.01	0.997	
4.0	10.0	10.283	79	94	82	88	8.92	0.996	

$$\gamma = \frac{V_w P_{bar} (T_d + 460)}{V_d \left(P_{bar} + \frac{\Delta H}{13.6}\right) (T_w + 460)}$$

$$\Delta H@ = \frac{0.0317\ \Delta H}{P_{bar}(T_d + 460)} \left[\frac{(T_w + 460)\ \theta}{V_w} \right]^2$$

P_{bar} = Barometric Pressure

ARMSTRONG ENVIRONMENTAL, INC.

DRY GAS METER #: 2

DATE: 3/7/92

ΔH	VW	TW	VD	TDT	TDO	ΔTD	θ
.5(5FT.3)	244.0	80/78	631.695	79	78		
	249.0	80/78	636.909	84	80	1	12.17
	5.0	79	5.214	82	79	81.	
1.0(5FT3)	249.0	80/78	636.909	81	79		
	254.0	80/78	642.075	89	82		8.67
	5.0	79	5.166	85	80	82	
1.5(10 FT3)	254.0	80/78	642.075	82	80		
	264.0	80/78	652.505	92	83		14.17
	10.0	79	10.43	87	82	84	
0(10FT3)	264.0	80/78	652.505	84	80		
	274.0	80/78	662.900	94	84		12.50
	10.0	79	10.395	89	82		
3.0(10FT3)	274.0	80/78	662.900	84	81		
	284.0	80/78	673.200	102	84		10.01
	10.0	79	10.300	93	82	84	
4.0(10FT3)	284.0	80/78	673.200	85	81		
	294.0	80/78	683.483	103	84		8.92
	10.0	79	10.283	94	82		

APPENDIX E

ARMSTRONG ENVIRONMENTAL INC
4747 IRVING BLVD. #204
DALLAS, TX 75247
PHONE NO. (214) 631-0021
FAX NO. (214) 905-0634

CHAIN OF CUSTODY RECORD

Name of Unit and Address:
Kirby Forest Products
Silsbee, TX

Sample Number	Date Sampled	Time Sampled	Description of Samples	Number of Containers	Tag Numbers	Analyses Required: Particulate Weight					Sample Tag Verification	Remarks
1-51	3/5	9:30	R1 Dryer 1 Filter 3/5/92		1-51	X						
2-51	"	"	R1 Dryer 1 PW		2-51	X						
3-51	"	"	R1 Dryer 1 Cyclone		3-51	X						
4-51	"	"	R1 Dryer 1 Implngers		4-51	X						
5-51	"	"	R1 Dryer 1 SG		5-51		X					
6-51	3/5	12:20	R2 Dryer 1 Filter		6-51	X						
7-51	"	"	R2 Dryer 1 PW		7-51	X						
8-51	"	"	R2 Dryer 1 Cyclone		8-51	X						
9-51	"	"	R2 Dryer 1 Imps		9-51	X						
10-51	"	"	R2 Dryer 1. SG		10-51		X					

Relinquished by: (Signature)	Date	Time	Received by: (Signature)	Relinquished by: (Signature)	Date	Time	Received by: (Signature)
Tom Grant	3/5/92						
Relinquished by: (Signature)	Date	Time	Received by: (Signature)	Relinquished by: (Signature)	Date	Time	Received by: (Signature)
Relinquished by: (Signature)	Date	Time	Received for Laboratory by: (Sig.)	Date	Time	Remarks	

Distribution: Original Accompanies Shipment
Copy to Client/Project Coordinator

ARMSTRONG ENVIRONMENTAL, INC
4747 IRVING BLVD. #204
DALLAS, TX 75247
PHONE NO. (214) 631-0021
FAX NO. (214) 905-0634

CHAIN OF CUSTODY RECORD

Name of Unit and Address: Kirby Forest Products, Silsbee, TX

Sample Number	Date Sampled	Time Sampled	Description of Samples	Number of Containers	Tag Numbers	Particulate	Weight				Sample Tag Verification	Remarks
						Analyses Required						
1-52	3/5	9:30	R1 Dryer 2 Filter 3/5/92		1-52	X						
2-52	"		R1 Dryer 2 PW		2-52	X						
3-52	"		R1 Dryer 2 Cyclone		3-52	X						
4-52	"		R1 Dryer 2 Imps		4-52	X						
5-52	"		R1 Dryer 2 SG		5-52		X					
6-52	"	12:20	R2 Dryer 2 Filter		6-52	X						
7-52	"		R2 Dryer 2 PW		7-52	X						
8-52	"		R2 Dryer 2 Cyclone		8-52	X						
9-52	"		R2 Dryer 2 Imps		9-52	X						
10-52	"		R2 Dryer 2 SG		10-52		X					

Relinquished by: (Signature)	Date	Time	Received by: (Signature)	Relinquished by: (Signature)	Date	Time	Received by: (Signature)
[signature]	3/5/92						
Relinquished by: (Signature)	Date	Time	Received by: (Signature)	Relinquished by: (Signature)	Date	Time	Received by: (Signature)
Relinquished by: (Signature)	Date	Time	Received for Laboratory by: (Sig.)	Date	Time	Remarks	

Distribution: Original Accompanies Shipment
Copy to Client/Project Coordinator

ARMSTRONG ENVIRONMENTAL, INC.
4747 IRVING BLVD. #204
DALLAS, TX 75247
PHONE NO. (214) 631-0021
FAX NO. (214) 905-0634

CHAIN OF CUSTODY RECORD

Name of Unit and Address:
Kirby Forest Products
Silsbee, TX

Sample Number	Date Sampled	Time Sampled	Description of Samples	Number of Containers	Tag Numbers	Analyses Required: Particulate	Weight				Sample Tag Verification	Remarks
11-51	3/5		R3 Filter Dryer #1		11-51	X						
12-51	"		R3 PW Dryer #1		12-51	X						
13-51	"		R3 Cyclone Dryer #1		13-51	X						
14-51	"		R3 Impingers Dryer #1		14-51	X						
15-51	"		R3 SG Dryer #1		15-51		X					
11-52	"		R3 Filter Dryer #2		11-52	X						
12-52	"		R3 PW Dryer #2		12-52	X						
13-52	"		R3 Cyclone Dryer #2		13-52	X						
14-52	"		R3 Impingers Dryer #2		14-52	X						
15-52	"		R3 SG Dryer #2		15-52		X					

Relinquished by: (Signature)	Date	Time	Received by: (Signature)	Relinquished by: (Signature)	Date	Time	Received by: (Signature)
[signature]	3/5/92						
Relinquished by: (Signature)	Date	Time	Received by: (Signature)	Relinquished by: (Signature)	Date	Time	Received by: (Signature)
Relinquished by: (Signature)	Date	Time	Received for Laboratory by: (Sig.)	Date	Time	Remarks	

Distribution: Original Accompanies Shipment
Copy to Client/Project Coordinator

ARMSTRONG ENVIRONMENTAL, INC

4747 IRVING BLVD. #204
DALLAS, TX 75247
PHONE NO. (214) 631-0021
FAX NO. (214) 905-0634

CHAIN OF CUSTODY RECORD

Name of Unit and Address: Kirby Forest Products, Silsbee, TX

Sample Number	Date Sampled	Time Sampled	Description of Samples	Number of Containers	Tag Numbers	Analyses Required: Particulate	Weight				Sample Tag Verification	Remarks
1-33	3/3/92	9:10 AM ~~11:37~~	R1 Dryer 3, Filter	1	1-33	X						
2-33	"	"	R1 Dryer 3, Probe Wash	1	2-33	X						
3-33	"	"	R1 Dryer 3, Cyclone Wash	1	3-33	X						
4-33	"	"	R1 Dryer 3, Imps 1&2	1	4-33	X						
5-33	"	"	R1 Dryer 3, Silica Gel	1	5-33		X					
6-33	"	11:37 AM	R2 Dryer 3, Filter	1	6-33	X						
7-33	"	"	R2 Dryer 3, Probe Wash	1	7-33	X						
8-33	"	"	R2 Dryer 3, Cyclone Wash	1	8-33	X						
9-33	"	"	R2 Dryer 3, Imps 1&2	1	9-33	X						
10-33	"	"	R2 Dryer 3 Silica Gel	1	10-33		X					

Relinquished by: (Signature)	Date	Time	Received by: (Signature)	Relinquished by: (Signature)	Date	Time	Received by: (Signature)
Joe O. Bairum	3/3/92						
Relinquished by: (Signature)	Date	Time	Received by: (Signature)	Relinquished by: (Signature)	Date	Time	Received by: (Signature)
Relinquished by: (Signature)	Date	Time	Received for Laboratory by: (Sig.)	Date	Time	Remarks	

Distribution: Original Accompanies Shipment
Copy to Client/Project Coordinator

ARMSTRONG ENVIRONMENTAL, INC
4747 IRVING BLVD. #204
DALLAS, TX 75247
PHONE NO. (214) 631-0021
FAX NO. (214) 905-0634

CHAIN OF CUSTODY RECORD

Name of Unit and Address:
Kirby Forest Products
Silsbee, TX

Sample Number	Date Sampled	Time Sampled	Description of Samples	Number of Containers	Tag Numbers	Analyses Required: Particulate	Weight				Sample Tag Verification	Remarks
11-33	3/3/97		R-3 Dryer 3, Filter	1	11-33	X						
12-33	"		R-3 Dryer 3, Probe Wash	1	12-33	X						
13-33	"		R-3 Dryer 3, Cyclone Wash	1	13-33	X						
14-33	"		R-3 Dryer 3, Imps 1&2	1	14-33	X						
15-33	"		R-3 Dryer 3, Silica Gel	1	15-33		X					

Relinquished by: (Signature)	Date	Time	Received by: (Signature)	Relinquished by: (Signature)	Date	Time	Received by: (Signature)
Jim A. Barnes							
Relinquished by: (Signature)	Date	Time	Received by: (Signature)	Relinquished by: (Signature)	Date	Time	Received by: (Signature)
Relinquished by: (Signature)	Date	Time	Received for Laboratory by: (Sig.)	Date	Time	Remarks	

Distribution: Original Accompanies Shipment
Copy to Client/Project Coordinator

STOCK # NPRBS

ARMSTRONG ENVIRONMENTAL, INC

4747 IRVING BLVD. #204
DALLAS, TX 75247

PHONE NO. (214) 631-0021
FAX NO. (214) 905-0634

CHAIN OF CUSTODY RECORD

Name of Unit and Address:
Kirby Forest Products
Silsbee, TX

Sample Number	Date Sampled	Time Sampled	Description of Samples	Number of Containers	Tag Numbers	Analyses Required: Particulate	Weight				Sample Tag Verification	Remarks
1-24	3/2/92	10:54 AM	R1 Dryer 4, Filter	1	1-24	X						
2-24	"	"	R1 Dryer 4, Probe Wash	1	2-24	X						
3-24	"	"	R1 Dryer 4, Cyclone Wash	1	3-24	X						
4-24	"	"	R1 Dryer 4, Imps 1&2	1	4-24	X						
5-24	"	"	R1 Dryer 4, Silica Gel	1	5-24		X					
6-24	"	2:25PM	R2 Dryer 4, Filter	1	6-24	X						
7-24	"	"	R2 Dryer 4, Probe Wash	1	7-24	X						
8-24	"	"	R2 Dryer 4, Cyclone Wash	1	8-24	X						
9-24	"	"	R2 Dryer 4, Imps 1&2	1	9-24	X						
10-24	"	"	R2 Dryer 4, Silica Gel	1	10-24		X					

Relinquished by: (Signature)	Date	Time	Received by: (Signature)	Relinquished by: (Signature)	Date	Time	Received by: (Signature)
Joe O. Barnes							
Relinquished by: (Signature)	Date	Time	Received by: (Signature)	Relinquished by: (Signature)	Date	Time	Received by: (Signature)
Relinquished by: (Signature)	Date	Time	Received for Laboratory by: (Sig.)	Date	Time	Remarks	

Distribution: Original Accompanies Shipment
Copy to Client/Project Coordinator

ARMSTRONG ENVIRONMENTAL, INC.
4747 IRVING BLVD. #204
DALLAS, TX 75247
PHONE NO. (214) 631-0021
FAX NO. (214) 905-0634

CHAIN OF CUSTODY RECORD

Name of Unit and Address:
Kirby Forest Products
Silsbee, TX

Sample Number	Date Sampled	Time Sampled	Description of Samples	Number of Containers	Tag Numbers	Analyses Required: Particulate	Weight				Sample Tag Verification	Remarks
1-25	3/2/92		R1 Dryer 5, Filter	1		X						
2-25	"		R1 Dryer 5, Probe Wash	1		X						
3-25	"		R1 Dryer 5, Cyclone Wash	1		X						
4-25	"		R1 Dryer 5, Imps 1&2	1		X						
5-25	"		R1 Dryer 5, Silica Gel	1			X					
6-25	"		R2 Dryer 5, Filter	1		X						
7-25	"		R2 Dryer 5, Probe Wash	1		X						
8-25	"		R2 Dryer 5, Cyclone Wash	1		X						
9-25	"		R2 Dryer 5, Imps 1&2	1		X						
10-25	"		R2 Dryer 5, Silica Gel	1			X					

Relinquished by: (Signature)	Date	Time	Received by: (Signature)	Relinquished by: (Signature)	Date	Time	Received by: (Signature)
[signature]							
Relinquished by: (Signature)	Date	Time	Received by: (Signature)	Relinquished by: (Signature)	Date	Time	Received by: (Signature)
Relinquished by: (Signature)	Date	Time	Received for Laboratory by: (Sig.)	Date	Time	Remarks	

Distribution: Original Accompanies Shipment
Copy to Client/Project Coordinator

ARMSTRONG ENVIRONMENTAL, INC

4747 IRVING BLVD. #204
DALLAS, TX 75247

PHONE NO. (214) 631-0021
FAX NO. (214) 905-0634

CHAIN OF CUSTODY RECORD

Name of Unit and Address:
Kirby Forest Products
Silsbee, TX

Sample Number	Date Sampled	Time Sampled	Description of Samples	Number of Containers	Tag Numbers	Analyses Required: Particulate	Analyses Required: Weight	Analyses Required: Sample Tag Verification	Remarks
11-24	3/2/92		R3 Dryer 4, Filter	1	11-24	X			
12-24	"		R3 Dryer 4, Probe Wash	1	12-24	X			
13-24	"		R3 Dryer 4, Cyclone Wash	1	13-24	X			
14-24	"		R3 Dryer 4, Imps 1&2	1	14-24	X			
15-24	"		R3 Dryer 4, Silica Gel	1	15-24		X		
11-25	3/2/92		R3 Dryer 5, Filter	1	11-25	X			
12-25	"		R3 Dryer 5, Probe Wash	1	12-25	X			
13-25	"		R3 Dryer 5, Cyclone Wash	1	13-25	X			
14-25	"		R3 Dryer 5, Imps 1&2	1	14-25	X			
15-25	"		R3 Dryer 5, Silica Gel	1	15-25		X		

Relinquished by: (Signature)	Date	Time	Received by: (Signature)	Relinquished by: (Signature)	Date	Time	Received by: (Signature)
[signature]							
Relinquished by: (Signature)	Date	Time	Received by: (Signature)	Relinquished by: (Signature)	Date	Time	Received by: (Signature)
Relinquished by: (Signature)	Date	Time	Received for Laboratory by: (Sig)	Date	Time	Remarks	

Distribution: Original Accompanies Shipment
Copy to Client/Project Coordinator

Enforcement Sensitive - Do NOT Release for FOIA Request (Entire Book)

Al Nugent, MRI

(816) 753-7600
x 142 Voice mail
box x 808

National® Brand

56-401	Ginger	Record
56-402	Black	2 Cols.
56-403	Red	3 Cols.
56-404	Blue	4 Cols.
56-406	Green	6 Cols.
56-408	Chestnut	8 Cols.
56-412	Maroon	12 Cols.
56-431	Black	S.E. Led.
56-441	Red	Cash

Made in U.S.A.

80 Pages

NEIC (303) 236-5739 Rich Ito or Al Bandur
5124 Rich directly

FOR AP-42 REF (1)

Silsbee (Kirby Forest)

07 1022

Look at
- Inlet T from S.C. - exceedance identity
- Look before - look at Vinay, Tinsend etc.

Bob Gulick

(703) 448-6846

Estimates end of Feb.

45
10,144
40 hrs.

816-737-7600
547

2560 / 16800 = 15%

Phil Schwindt
(214) 341 6746
fax: (214) 340-0057

8.5
60 | 35.0

Good for all Tests
METCO Env
Dallas
(214) 931-7127
per Phil Schwindt
Call Billy Mullins

16.5
12
330
165
1980

72
32
144
216
2304

143 tons/day

12
16
72
12
192

Press Room

Silsbee Plant has PV numbered as follows

Lind Robinson (1)
707 243 8812

05 02 01
04 03

.15

$$\text{dryer } \frac{\text{lbs}}{\text{hr.}} = \frac{\text{Tons FP} \times \frac{2000\text{ lbs}}{\text{Ton FP}}}{1 - .22}$$

07 1101

37% of time

2y , not

s upset
s and time when
- wafers in a dry bin

make board

o dryer

t temp of
c)

the time, same

sen wide

rigan,
own
not
nd wet
t run as

ch Vaught
5239

h -

07 1024

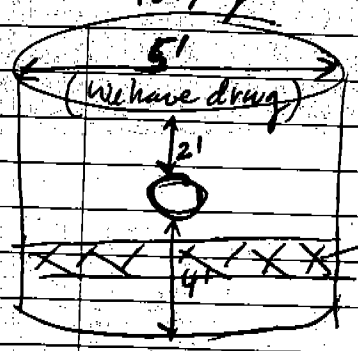

← Air exhaust for pressvents (on top of roof - temporary exhaust stack)

baffles for evening out flow

(*) (?) Men were cleaning out multiclones just before tests. Danny Russell of EML said VOCs are lower after cleaning of multiclone. When dirty, more VOCs and particles get through

Problems with Dryer #1 fan (just before test — MEC came to inspect)

(*) mike of MEC said water was in fan - couldn't run they should drain it out

One of Dr. Boswell's friends died - he had to set up funeral arrangements and his visit to site was delayed.

Danny Russell of EML said Method 25A sample line would be kept at 260°F (while stack was at 160 - 180°F) in order to prevent VOCs ~~moisture~~ from condensing out.

Danny switched to 3 holes for p.v. ← Also said 25A would be done with only on sample hole in probe which would be located in a central position. They can't do both VOC and PM (2 probes) at same time. (Except for pressvents, where we used 3 holes due to complex flow

Laxmi said call → Dallas (919) 541 - ~~5371~~ ~~5371~~ 5371

Seifert

to get variance on standard methods.

He must approve before test modification.

07 1025

Dallas said to talk to Ed McCarley
(919) 541-5546

Ed said most of VOC would be in gaseous phase and would be distributed OK. He said to have test team check proposed sample point against velocity profile and to go ahead if it looked OK.

test at Silsbee
9-24/26/91

		1	2	3	4	5
VOC	lbs/hr.	21.5	22.7	25.4	29.7	27.1
	ppm	~~30.7~~ 316	344	380	388	359
CO	lbs/hr	4.18	2.4	4.96	1.68	1.04
	ppm	31	18	37	10.8	6.8
1360T dryers max design per MEC	48000 acfm	48000 acfm	48K	48K	48K	48K
Stack temp	194°F	197	186	177	179	175

Velocity heads Couldn't decipher from reports

operating conditions during test
dryer temps averaged 708°F
No production mentioned during tests.

07 1026

Actually 7.8 - 8.6% per Ed Knight

Incoming Wet

Ley

be in
d be
have test
ple point
and to

	5
9.7	27.1
88	359
1.68	1.04
10.8	6.8
48K	48K
179	175

reports

7 1026

at 4:00pm all stacks operating and test equipt in calibration. Flow out of stacks looks cyclonic as it exits →

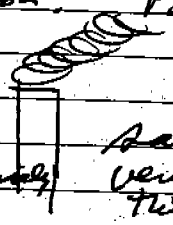

mike Audson of MEC

(*) ? probably too far downstream to adversely affect flow in stack.

Said there is vortex at very top of stack to create this flow so that company can tell if flow is proper.

Test Dryer #1 start 4:15 pm

Drybins ① 3/4 – 5/6 before full
② ~~full~~ 5/6 after both full (high at alarm level)

Control console said both on "mid" full

actually 7.8 – 8.6 % per Ed Knight ← Moisture 5–6 % (chart) Digital said 6.3

40 % opacity

Inlet temp 800 – 860 °F

14–15 ma air demand → corresponds to about 45000 acfm air flow through dryer

Cycle time
into press
next load into press > 6.5 min for the 23/32" board being made.

Press temp 417 °F in → 420 °F out

9.5 press loads/hr. according to press operator

(7/16" board would be about double this press production.) (actually 16 p.l./hr. for 7/16)

Density of board 41.6 lbs/ft³

Incoming Wet moisture of wafers on 9/24/92 was NO1 wafer {40.2 % 42.6 %
NO2 wafer-izer {49.4 47.0

07 1027

(*) It's better to use dryer dump than weight of finished product, because

(Per Ed Knight) ~ 4 hrs time between dryer production and time dryer waters gets to press, (due to size of dry bins)

Board size vs % produced - typical period:

65% is 7/16" (most of FP is this size)

20% 15/32"

5% 23/32"

10% 3/8" → 1/4"

going to run either 7/16 or 15/32 for most of rest of week

Plant actually ran at ≥ 1.05 mm ft²/day on 2/13 and 2/22/92, according to chart on wall in QA lab

Corresponds to about 383 mm ft²/yr density of board

Start of Run #2 Dryer #1

T ~ per S.C. 750 °F moisture

↳ went up to 800°F and stayed fairly level

digital and strip chart don't agree

6.8 on Digital

5.5 on chart

Opacity 31% - 29% - 32%

OUTlet ~ 200°F - 200 - 200

Per Ed Knight

(*) Can't trust strip charts or digital read out on moisture. They pull grab sample to check every hours

No. 1 dryer moisture 8.6 - 7.8% during test #1 - according to these pulled samples - recorded in log books every hour.

Air demand run #2 dryer 14-18 m.ch

Moisture dryer #1 run #2 6.8%

07 1028

To

No. 1 dryer

750
20
11600

13820
13040
780

(*)

T-O

(*)

weight of

ction
ize of dry bins)

ing to run
the 7/16 or
5/32 for
most of rest
of weeks

digital and
strip chart
don't agree

8 on Digital
5 on chart
ged fairly
level

out on
every hours

uring test

07 1028

To determine #/hr. Dryer #1

Fire Dump samples to determine dryer dry furnish rate

16.4
16.8
15.6
48.8
16...
avg for dryer #1 ~16,000 lbs/hr

No. 1 Per Boswell – after 1st run – dryer 840 lbs / 3 min → 16,800 lbs/hr

2/23

My observation of dump ~~during~~ at end of 2nd run

$$\frac{780 \text{ lbs}}{3 \text{ min}} = 15,600 \frac{\text{lbs}}{\text{hr.}}$$

780
20
1,600

Swept up flakes that missed and put them in truck, too.
Covered flakes with tarp to keep dry on way to scales.

13820
13040
780

13820
observation by Al Bandur
Run #2 VOC voided by Danny Russell – said he forgot and removed cap from line and pulled in ambient air – Al Bandur thought he moved probe to a different position in stack – VOC was at 60 ppm (low).

T-O ~~Hours~~ not venting through stack – it's going straight to atmosphere per dryer operator (8 pm). Problem with damper → per Boswell. 07 1029

"This is the way we normally run" per console operator in dryer room – we asked 2 of them on different shifts and they replied the same way.

Run #3

Opacity 26% ~

T inlet = ~ 775°F → 850°F

air demand 1515 ma

Opacity 30

Went with truck to get another empty wt of truck

tare weight was 13060 (compared to 13040 earlier)

drier feed drive belt running at ~ 22

all during ~~test~~ runs 1 → 3

Board Thickness check – 15/32 board
Wt

$$\frac{51\ lbs \times 12\ \frac{in}{ft}}{32\ ft^2 \times .444\ in} = 43.07\ \frac{lbs}{ft^3}$$

A = Sun-Wed, days
B = Sun-Wed, nights
C = Wed-Sat, days
D = Wed-Sat, nights

12 hr. shifts

Silsbee production from display on side of QA lab;

SHIFT	Fri Sat Sun 2/21-23/92	Footage WTD	MTD	Down Time
A	505536	505536	5,004,096	0
B	497472	497472	5,668,416	67 min
C	900288	900288	5,730,048	19
D	1,037,952	1,037,952	22,198,656	15
TOT	2,941,248	2,941,248	22,198656	95

Wed is 6+2 hrs. door for clean

$$22{,}198{,}656\ ft^2 \times .03125\ ft \times 42\ \frac{lbs}{ft^3} \times \frac{ton}{2000\ lbs} = 14568\ tons$$

in 23 days = 633 tons per day and 26.4 tons/hr. 07 1030

Pre

1/2 wks → 0

yes 0

flow ck per Al Binder – its even across dia

2/25/92 → 0

~~Book~~
J. Boswell
Rm 107
Pinewood Inn

all the time before our visit

1/2 wks

Thinner board (15/32") seems to create more emissions off press than Thicker board 23/32".

Press Fans (vents) are either on or off - only light on ~~p-drier~~ press console shows whether they are on or off.

...ty wt of truck 13640

- 22

For tomorrow

(*) → Dryer burners cleaned every wk Now expect to do twice/wk

1/2 wks → o Check cleaning frequency of multiclones (are they doing it on dryer # or #3 today?)

yes o ~~Konus~~ T-O working? - Going through dryers #1 and 2? (which is Danny testing?)

flow ck per Al Bender - its even across dia

What is ΔP across dryer #1 (and other stacks)? (Record it)

...7 lbs / pg 3

QA lab;

2/25/92 → o Laxmi said to tell Jim Boswell:

Down Time

(1) Don't clean multiclones or other equipment just before test

Al W. told Boswell 8AM 9-25-92

~~Book~~ J. Boswell Rm 107 Pinewood Inn

(2) Rerun dryer #1 test when Konus is being exhausted through dryer

(3) J. Boswell should call Laxmi if he has any questions. (703) 308-8718

...096 0

...416 67 min

...048 19

...656 15

...656 95

all the time before our visit → (4) how often do they have ~~Konus~~ MEC T-O bypass dryer?

1/2 wks → (5) how often do they clean multiclones?

...ton / lbs = 14568 tons

...hr. 07 1030

07 1031

(*) Danny Russell told Al that he didn't do isokinetic determination on the spot ~~just~~ to see if he was in the ballpark - he will still do isokinetic calculations in full during data reductions. He's trusting that 9/91 test conditions were about the same as what this test would be.

(*) Multimedia concern - when they clean out multiclone they discharge resinous sludge to unpaved lot in side yard - near wood chip piles and ~~fire dump~~ log pile. VOCs in soil? probably should check.

(*) Dryer Console operator on 9/24 told Rich Ida that they "normally ~~as~~ by-pass dryer for the ~~Komes~~ T-O" (2nd operator that has told us this), but that now they had been told to always put Komes through dryer.

= Incoming wet wafer moisture on Am 9/25/92

47 % and 44 % at 8:25 AM

Running 7/16" at 10 AM 9/25/92 - will probably switch to 15/32" later.

07 1032

We = Al Nugent and Rich Ida

t he
ction on
is the
okinetic
ta
ing that
bout
r would

ay
e
at
piles
DCs in

ld
ally
"
but that
ryer
5/92
ty

will

(*) Al Bandur said there is about as much visible emissions coming out of peak of roof as there is out of press vents. The emissions out of roof peak, according to Al B. are about as much as another roof vent (We took a look from 500 yds away and concluded the same)

We = Al Nugent and Rich Ida

(*) Konus vent to atmosphere — even when Konus vents to dryer, there is Konus exhaust coming directly to atmosphere. What is lost through damper is we don't know, — later — its minor per Al Bandur except when dampers to dryers are closed.

(*) Couldn't run HCHO test on 9/25 — lab that mixed DNPH mixed liters not ml of reagent. Will hopefully be ready for HCHO test on 9/26.

As of 10AM Boswell had not been able to reach Laxmi — Boswell said they would test on dryer #2 with Konus venting through dryers 1 and 2. They would also do velocity/air flow on Konus outlet to dryers to try to convince us that flow was equal from Konus to both dryers. Boswell said he would test dryer #1 again if he had to. Laxmi at 10:30 AM said he would call Boswell right now.

(*) Operators are reading temperature chart to 1°F when divisions are in 30 5 °F increments (Training needed?)
→ see later notes. Some read digital, some read strip charts.

07 1032

07 1033

Lexmi wants press vents to collect all emissions from press. Said he would tell Boswell that. (I did, since Lexmi / Boswell could not reach each other by noon).

(*) Dryer #3 was operating constantly at 50-60% opacity 9-10 am when we were looking at them.
Control room operator didn't know why and didn't know why opacity monitors were on console.
(lack of training?)

Dryer was operating at high opacity levels even though gas was being used as the fuel.
(what's state / SIP limit? 20%)

Testing starting on dryer #2. Opacity looks high on dryers 2-5 at 1:30pm and looks lower on dryer #1 stack.

1:30pm
Phone c
(ar

07 1034

1:30pm → test on #2 dryer just started per Ed Knight

Phone conversation Laxmi Kesari / Jim Boswell
(Al Nugent could only listen and try to summarize below)

① Kirby will have dryer #1 retested with Konus venting through dryers 1 and 2.

② Concerning emissions out of roof (instead of out of press vents). Boswell thinks they're insignificant and he has no feasible way of enclosing roof vents to prevent emissions.
Laxmi told Boswell to close off 30 feet of roof vent on either side of press.
Boswell said ok. He will do that.

Re:
③ Schedule of testing
— Hold off on all PM-10 until end of TSP, CO, VOC testing on all dryers.
Laxmi said ok.

④ Re ultimate end of schedule (3/31).
Interpell can't make it
Pace might be able to.
Alliance might be able to. (TRC subsidiary)
Laxmi said ok to use more test crews, just use same test methods.
Laxmi to make Clayton Test
Holiday Inn — Eufala is place to stay. Plant is on White Oak Station Rd (Right turn coming from Columbus GA.

Check on dryer dump to determine lbs/hr

13 880 full (3 min wt)
13,060 tare wt
820 lbs

at start of 1st run of day.

$\frac{820 \text{ lbs}}{3 \text{ min dump}} * 20 \frac{\text{3-min periods}}{\text{hr}}$

$820 \times 20 = 16{,}400$

$= 16{,}400 \frac{\text{lbs}}{\text{hr.}}$

WHAT DRYER ??

1st run of day moisture 7.5% at 2pm
opacity 4%

(*) Get Dryer Report for each dryer for WK before and during tests to see if they run tests under different conditions

This did not occur after we discussed it with them

— looks to us like dryer that is being tested is being run at lower input feed speed.

(*) Forming, press / loading / drying takes place over ~~200~~ 150 yds ? A lot of VOCs are in air in this area that do not get pulled through press vents by the vent fans. They go out roof monitor

07 1036

(*) Rec

(*) Shift A Chr
Shift B Kei

's/hr

tart of
run of
y.

ods

at 2pm

for

y
conditions

being

over

air in

roof

go out roof

07 1036

9/25/92 #2 and #3

(*) Run #1-VOC - Al B. noticed probe off on side of stack for last half of run ~~it also is~~ and probe was tilted upward. also it was pointed upward. Al to call Dallas Seifert / Ed McCarley if these conditions are ok. - He checked / and they said ok - don't worry.

Board density 42-43 $\frac{lbs}{ft^3}$ at 3pm

probably corresponds to 1st run of day.

(*) $32 ft^2 \times \frac{19}{32} in / \frac{12 in}{ft} \times 42 \frac{lbs}{ft^3} =$

Shift A Chris Hare - dryer op. console
Shift B Keith Ruggles - " "

Chris says he was told yesterday to run Konas through dryer "until further notice"

Dryer #2 Run #1 - inlet T → 770-800

Run #2 - about the same
Opacity 32
Moisture 8% at 4pm

end of run #2 dryer #2
opacity 26%
inlet ~ 800°F
inlet moisture 45% #1 Wafer izer
42.5% #2 Wafer izer

outlet moisture 7%

07 1037

(*) MEC ... test

They closed louvers in roof monitors to some 50 ft on either side of press. I couldn't see any significant difference with emissions. Boswell/Nugent/Ido decided to go with this arrangement for press vent tests, but to realize we will have to estimate fugitive VOC (and other gaseous) discharges when we evaluate press vent emissions. Boswell may ask Danny Russell to try to sample ~~monitor~~ along the press monitor louvers to get a handle on this. Nugent/Ido/Bandur guess that fugitives may equal emissions from one of the press vents (crude guess). Radius of effectiveness of fans is not that great - can't seem to pull in many fugitives, anyways. Would have to completely enclose press area and use ~~the~~ larger fans to capture much of those fugitives.

Density - 42 41.7 43.7 ~~[illegible]~~
2 - 5pm 2/25/92

(*) Al - call Rich Opem - find out what permit application says for fugitive loss. - 20% including unloader vent

Check near end of run #3 - Dryer #2
opacity 32, inlet temp = 800°F,

07 1038

(*) MEC reps were present during entire test period. → Service reps of dryer Co.

~~dryer production~~ Mike Hudson
Their Mike Weindorfer } MEC

~~[illegible]~~ Advice to LP to minimize pollution

- Run steady – one temp with not much variation

– They say Silsbee has been running pretty steady since start up.

– also, if you run steady you notice changes and can correct based on these changes

- if you have leakage (gradual) of air flow through dryer – need higher inlet temp to dry same moisture
  – cause! seals bad. – Should change twice per year is standard
  MEC gives them instructions and checklist for maintenance.

– generally, OSB mills have lumbermill mentality – run all out production – just getting up to speed on sophistication of equipment in OSB mills. – lot of people came from lumber background – not familiar with tight environmental or process controls.

- he thinks they could show in real-time, using a FID, how much VOC is reduced by low temp drying

tors to some
couldn't
, Boswell/
arrangement
e we
– (and
e
Boswell
to
ovvers to
gent / Ito
equal
nts (crude
of fans
pull in
pletely
ns to

permit
loss. – 20% including unloader vent.

#2

7 1038

07 1039

[redacted]

- 5471

For ~~Thurs~~ Wed – Find out: – frequency of cleanup of multiclones

– what MEC has told LP to do; anything specific which may have led to lower emissions?

nothing specific according to them.

– tell Danny (EML) if he's going to do a roof monitor traverse, it should include a press maximum emission cycle or two (with roof monitor louvers open).

To do wouldn't be worth it. Test method doubtful with no stack.

– get dryer report for 2/23/92 from Ed Knight (see if belt drive rates – input to dryers – were same before tests)

Ed copying we have

– see if I can get production records (TFP, lbs/hr dryer, inlet temp) for 9/24 – 9/26/91 from Ed Knight.

To do Boswell must send as part of 114

– make sure they're doing traverses across press vents – not just one point

yes for HCHO

three ~~one~~ points on probe for VOC

07 1040

– talk to Laxmi about getting lbs/hr at beginning and end of a test instead of beginning and end of each run.

has not started → 8:30 AM

During witness tests we couldn't see reasons for changes in opacity.

nup of multiclones
d up to do,
- which
to lower

hes going to
nitor traverse,
lude
un emission
- (with
louvers

ort for 3/23/92
night
t drive
t to dryers
efore tests)

production
s/hr dryer,
9/24 - 9/26/91

oing traverses
- Not just
7 1040
bout
beginning
- instead
of each

Run #1 Dryer # 3 [9/26/92] Wed.

has not started as of
→ 8:30AM Press running 7/16" board
seems to be more haze in bldg. (raqmonitor
louvers closed and 7/16" has faster cycle
time). Running ~ 16 press loads/hr
according to press chart (press chart is 24
hour chart - 6 → 8 on chart = 1 hour
density 42-44 usually 43 for 15/32" board.

dryer # 3 ~ 800 → 820°F 9% moisture (8AM)
feed rate 27 opacity 27%

dryer operator didn't know of any point at
which an opacity reading should be reported
(*) to supervisors (This is 3rd operator who had
similar comment) Operator: Calvin W., Foreman
Calvin G. (from log).

During witness tests we couldn't see reasons for changes in opacity.

Both Core dryers (1 and 2) now higher in opacity
[38-40%] than the three face dryers (3, 4, and
5) [27-32%] This is the reverse of what
we saw on 9/25 and 9/26 when we were
testing dryers 1 and 2. - in 2nd and
3rd run opacities did switch somewhat,
however.

Dryer #3 test #1 began ~9:15AM - Stack velocity less at
center than between edge and center of
stack. Al Bandur to tell EMC to sample
½ way between center and edge. (Dryer #2 was
done in center. (Later changed to three holes
in probe)

07 1041

800 - 830°F

10:15 AM near end of 1st run on dryer #3
inlet T ≅ ~~[illegible]~~ ~~(went down from~~
~~820°F - 850°F at about start of the run)~~
Opacity 26% ~~(but other driers went down in Temp~~
~~[illegible])~~ line speed ~ 27 moisture 9%

(*) Dryer #3 shows more variability than the other dryers according to Mike Weindorfer of MEC
– might need electrical adjustment (by L-P electrician)

11 AM – Still doing 16 press loads/hr. of 7/16" board.

$$16 \frac{\text{press loads}}{\text{hr}} \times 12 \times 24' \times 8' \times (7/16/12)\ \text{ft} \times 43 \frac{\text{lbs}}{\text{ft}^3} \times \frac{\text{ton}}{2000\ \text{lbs}} = 28.9 \frac{\text{tons}}{\text{hr}}$$

792.576
× .03644

Compared to dryer production of 5 dryers × 15,000 lbs/hr. × ton/2000 lbs
= 38.5 tons/hr. (.15 × 38.5 = 5.8)
~~without~~ with loss ~~[illegible]~~ 32.7 tons/hr.

(*) Why so big a difference? Even with .5% loss press → 28.9 ~~[illegible]~~ tons/hr. with no loss
5 dryers 32.7 ~~[illegible]~~ tons/hr.

38.5
− 5.8
32.7

~~[illegible]~~ Some dryers must be operating well under (waters) 15,000 lbs/hr. (probably, have high fines losses)

Dry bins both about mid-full for the run #1 dryer #3 (before and after)

07 1042

11:

Dry

2
14
14
14
14
14
5174
15.—

716
20
14 200

740
20
.4800

656
20
600

fuel feed

ger #3
~~ion~~
~~ion~~)
~~ntdown in Temp~~
sture 9%

Than the
n of MEC
electrician)

r. of 7/16"

7/16/12) ft

28.9 tons/hrs

15,000 lbs/hr. x ton/2000 lb
38.5 = 5.8)
loss ~~[illegible]~~ 32.7 tons/hrs
with .5 %

with no loss

well under
high fines losses)

for the

2/26

11:15 AM new truckload of wafers to be weighed for dryer production determination

Dryer #3 dumps

13760	13800	13820	13820
13080	13100	13080	13080
680	700	720	740

2
14
14
14
14
14
5174
15,

avg $\frac{710 \text{ lbs}}{3 \text{ min}} \times 20$ (3 min periods) = $\boxed{14,200}$

710
20
14200

740 → 14,800
680 → 13,600

Moisture 12% (~~special~~ sample I took from fire dump truck) — ~~moisture was 10%~~ before it went to truck.

740
20
14800

680
20
600

Dryer #3 is face dryer — has higher moisture level in wafers when "dry" (~ 9%).

11:40 Run #2 dryer #3 started
Inlet T = close to 900°F, had to put on "manual" fuel feed to pull it back down. Still at ~ 860°F when I looked at 5 min later. Opacity 28%
When temp was high, opacity had reached about 39% but dropped to 27-28% after manual was used.

Press Vent #2 run #1 for HCHO started
press loads per hr. = 16
TO heater temp 415°F
7/16" board density = 43 lb/ft³
Line speed = 80

07 1042

07 1043

[redacted]

(*) expect (2) and (4) to be higher - they're in direct line of emissions from press; (1), (3), and (4) should be lower, with (5) lowest of all.

Press Vents
Look at ~~plant~~ ~~layout~~ for actual Vent numbers per plant
later page

(2) (4)

(1) (3) (5) Loading Vent

Roof monitor

Press Control Room

Press Vent #2 run #3 - 16 press loads/hrs
2:35 pm (not sure when it started) line speed 80
7/16"
T-O heater 419°F

Start of ~~test~~ run #1 on Retest of Dryer #1

(*) speed 22
dry bins low-low
operator cut back on speed because wafers were wetter (moisture had gone from 6.0 → 7.5 by 10 AM; stayed at 7-7.5 up through 2 pm.

← Other dryers now at higher speed than #1, #1 had been higher before.

(*) stack putting out little steam and mostly particulates - plume didn't dissipate
Stacks 1 and 2, 3 look similar - not much discharge compared to 3, 4, 5
Couldn't figure out why - even with help of MEC reps.

07 1044

(*) 4:30 pm
Dryer #1
Run 1
Last 7
13
13

(*)
Run
Dr
43,600-

(*)
ASK
Mike
Shcom

...hegre in direct
...), ③, and ④ should

...ading
...ent

...ss loads/hrs
...eed 80
..."
...heater 419°F

...ryer #1

...dryers now
...ghe speed
...#1, #1
...been higher
...efore.

...up through

...mostly

...ate

...not much

...with

07 1044

This went through debarker, but not through waferizer - it's separated

~~(*) also, now putting (3:30pm) starting put old scrap wood (branches, small logs) into waferizers).~~

4:30pm
Dryer #1
Run 1 retest

inlet T ~ ~~[illegible]~~ -800°F (~start)
opacity ~~[illegible]~~ %26
speed ~~[illegible]~~ 22

Last truck dumps: Dryer #1 retest

13740	4:24pm	13760	4:01 pm
13060	4:10 pm	13060	1:37 pm
680		700	
x20		x20	
13,600 lbs/hr.		14,000 lbs/hr.	

How did this affect tests?

(*) incoming wafer moisture content only 39%

Kirby only took one incoming moisture all day. So we didn't know this till end

Run 1 dryer #1 retest (end)

13,600-

Dryer #1 Stack now has (visual) opacity > stack #2 but air flow seems reduced and water vapor is less than stacks 4 and 5. Why? ID fan volts/amps ~~[illegible]~~ were alike for all dryers (They can't be varied, anyway).

Thermal oil heater malfunctioning - high skin temp. too high but haven't stopped it yet. 5:30pm damper to dryer not opening all the way. Could this have an effect on Dryer 1 retest?

(*) ASK Mike

Incoming moisture content ranges for dryers tested.

dryer NO.1	40-49%	Mon 2/24
dryer NO.2	43-49	Tues. 2/25
dryer NO.3	39-47	Wed 2/26
dryer NO.4	39-52	Wed 2/26
dryer NO.1	42-50	Thurs. 2/27

07 1045

For Thurs

Simple Subtraction from totalizer 47-52% → check tons dry fuel – during test 47-52% → show us how it's calculated

- check wood moisture – what is normal range?
- feed rate (speed)
- temp.
- which dryer's damper didn't work on T-O in pm of 2/26? Did it affect test on dryer #1?

(*) MEC doesn't know if it would affect result or not

✓ Ed • last 2 wks of feed speed

(when was test) • get production TFP
all 5 dryers inlet temp
~~burner fuel~~
dry feed rates (speeds)

Testers for PM-10

Ed will do with Jim Boswell tests of 9-24/26/91

• Show me how fines/trim are being calculated

it was on 2/27 • Last 2 dryer test (#3 and retest of #1)
were both run at 13,600 – 14,000 lbs/hr
getting lower. Keep production up.

For Fri ✓ Remind J. Boswell we want to see results of
of invalid dry #1 test on 2/24/92
(This was w/o ~~[illegible]~~ T-O exhaust)

Ed ✓ • get dimensions on press vents and
modifications made.

07 1046

ated

47-52%
mal range?

k on T-O
on dryer #1?

eads)

ing calculated

of #1)

lbs/hr

up.

ets of

t)

Thursday 2/27

{ Waferizer #1 feeding dryers #1 and #3

8:15 AM at plant - Running 23/32"
- press line speed 50
T-O heater 420°F
~ 10-11 Press loads/hr.
Incoming moisture → 44% 36%
Waferizer → #2 #1

Dryer #1 800°F opacity 26% line speed 23

Dry bins Mid - Mid

Testers for PM-10 } Armstrong Env. Tom Armstrong Pres. PM 10
(214) 905-0634
(214) 631-0021

Observed person cleaning out dryer #4 burner at 8:45 AM. This is the next burner to be tested.

Board Density (23/32") 41.6 lbs/ft³
(based on 3 measurements in AM)

7 1046

07 1047

[redacted]

2/27

Stack #1 just before 1st Run ~~[illegible]~~

Line Speed
Temp
Moisture

Dryer	8:30 AM	9:25	10:25	11:05	1130	12N	3:40 Spm
1	23 800 7.6	23 770 8.8	23 770 8.6	23 800 8.0	22 800 9.2	22 850	844 22 954 21
2	23 850 7.6	23 850 7.0	22 800 7.0	22 800 7.0	22 800 7.6	22 850	837 22 998 23
3	26 750 9.0	26 770 9.5	26 700 9.0	26 770	26 800 9.0	26 800	829 24 841 24
4	27 750 9.0	29 600 8.4	28 700 9.0	30 800	24 820 8.4	26 850	851 24.5 790 24
5	22 820 9.0	23 820 8.6	24 770 8.8	22 820	22 820 9.0	22 850	824 22 830 22

11:03
0947
1 hr

Dryer #1 wood fuel totalizer ~~[illegible]~~

0847 AM → 313 507
0935 313 699
0947 313 753

in 1 hour

753
− 507
246 → counter revolutions
× 6.2 → lbs/rev. per Ed Knight
1525 lbs/hr. wood fuel to dryer #1

2 tons/hr.
1 t/hr.

114 Submitted said 1.75 tons/hr. → 3500 lbs/hr. { Max design capacity

10:30 AM Dryer #1 has been at low opacity all morning 22-27%, ~~but~~ has had periodic excursions on moisture — so have other dryers when moisture increased and temp fell below set pt.

(*)

Pm 10 sampling team using dinged pitot (and Rusty) tubes — They're going to file them.
Al Bandur to check procedure manual to see if They're following procedures.

11 AM Press loads/hr 23/32" still ~ 10-11
Press temp 420°F

07 1048

wood f
dryer
time
1105
1205

NOTE
Dryers

Thurs. 2-27-92
Re
12
12N not
b
(*)
p
W
(*) 1:30 pm
C
Na
n

Trying to get MEC ~~Konus~~ back on line after skin temp problem and subsequent use of gas as fuel

		2:20 pm	3:40 5pm
1130	12N		844 954
22	22	23	22 24
800.2	850	796	0947
22	22	22	837 798
800.6	820	816	22 23
26	26	23	829 841
800 9.0	860	858	24 24
24	26	25	851 790
820 8.4	860	857	24.5 24
22	22	22	824
820	850	819	22 830
40			

1103 dryer #1 wood fuel

1 hr 16 min = 1.26 hr.

314 071
−313 753
318
×6.2
1972
÷ 1.26 hr.
1565 lbs/hr.

wood fuel usage

dryer → / time ↓	1	2	3	4	5
1105	314082	568039	341974	858989	443139
1205	314346	568347	342314	859174	443490
fuel →	1637 lbs/hr	1910	2108	(gas) X	2176 lbs/hr.

NOTE: Dryers 1 and 2 use less fuel when Konus is working (about 1000 lbs/hr. less) compared to dryers 3, 4, and 5

2 tons/hr.
1 t/hr.
fuel to dryer #1
Max design capacity
l morning
ei
other dryers
oisture increased
fell below set pt.
d pitot
ee if Thyro
)-11
07 1048

Thurs. 2-27-92 Runs 2 and 3 on Retest of dryer #1 over at ~ 12 noon.

12N noted more aged logs being put into debarker than before (1 truck load)

(*) moved a truck load of newer logs to storage pile

We will continue to get wet bin moistures from MEC reps to see how ~~what dryer sees~~ moisture of wafers that go to dryers changes.

(*) 1:30 pm – another truck with older logs – logs loaded directly to debarker

Newer logs came in on next truck – They were ~~[illegible]~~ not unloaded – turned around and went back toward plywood mill – came back again and were put on top of storage pile

07 1049

[redacted]

3rd truck came in - ~~newer~~ older logs - They (1/2) went to storage pile - ~~on top of pile~~ a separate older log section 1/2 went into debarker directly.

(*)

Next truck - newer logs - all went to storage pile

I talked to Ed Knight, Plant Mgr. he said they try to run older logs first all the time (no logs are older than 7 days in the whole yard) (Logs in plywood mill are about 30 days old). Sometimes they have to pick up newer wood off trucks because they have a line of trucks waiting. Ed says this is their standard procedure.

2:10 pm - TO oil heater ~~205~~ 405°F
10 press loads/hr.
23/32 " board.
density = 41.6 lbs/ft³

dryer No. 4 on wood fuel again to get ready for pm VOC CO test

pm-10 test being run on dryer No. 3

T-O ~~Kong~~ running on gas - Switched over at lunch time (not testing 1 and 2 - so doesn't matter)

07 1050

Time
1523 3
1205 3

Fuel usage →
in 3 hr. 18 min
= 3.3 hr

in 1 hr. →

~~T-O Kong~~ on

7

(*)

Time
1625
1523

1 hr. 2/60
1.03

fuel usage

4:40 p

	Time	1	2	3	4	5
')	1523	315406	569579	343441	860390	444679
went to	1205	314346	568347	342314	~~just got off~~	443490
older log		1060	1232	1127	859174	
tly		x6.2	x6.2	x6.2	1216	1189
					x6.2	x6.2
age pile	fuel usage →	6572	7638	6987	7539	7372
said they	in 3 hr. 18 min = 3.3 hr					
time (no		Konus on gas				
e yard)	in 1 hr. →	1992 lbs/hr	2315	2117	2285	2224
s old).	To ~~Konus~~ on gas fuel during most of					
wood off	This time					
nuks						
tandard	(*) PM 10	probe ~~stack~~ temp not monitored well				
	— temps vary with time and are different from EML's					
	Al Bandur doesn't trust result.					
	1st run for PM-10 on stack #3					
~~5~~ 405°F						
	Time					
	1625	315751	570026	343792	860756	445041
	1523	315406	569579	343441	860390	444679
ft³		345	~~4679~~ 447	351	366	362
	1 hr. 2/60	x6.2	x6.2	x6.2	x6.2	x6.2
reads for	1.03	÷1.03 335	÷1.03	÷1.03	÷1.03	÷1.03
3	fuel usage →	2077 lbs/hr	2691	2113	2203	2179
ner at	4:40 pm	Press 10 press loads/hr. 2 3/32"				
and 2		line speed 50	T-O heat 408°F			
		Density 41.8 lbs/ft³ averaged over 10 hrs. 6am-4p				

07 1050

07 1051

Stack #4 13880
-13000
880
×20
17600 lbs/hr.

5pm 2/27/92

Vince Loller (?) (truck driver, bulldozer operator), when asked, told me he thought that they were ~~[illegible]~~ sending old wood to debarkers first "because of the testing that was going on". "Old wood had less moisture or something like that". Everyone else said it was their standard procedure; always output the old wood first - better for blades, less Treq'd from dryers.

5:30 pm electricians (3) checking out burner on #5 dryer - one that will be Tested tomorrow

07 1052

(*) wts.

5:3

Dry

temp
spe
moistu

Pre

a
9

1/9

(*) wts. of dumps during 2/27

14,400 lbs/hr. 12,800 15 200 17,600

might not be right maybe more than 3 min

? was this one tared out

5:30pm

Dryer →	1	2	3	4	5
temp	832	841	836	824	824
speed	22	22	25	25	22
Moisture	7.6	7.8	8.8	9.6	9.4

Press now ~~using~~ making 15/32" board (Started 5pm)

T-O heater 419°F

line speed 80

Press loads/hr. ~16

Rotation of dryers

8+ sec / revolution — #2

9 sec / rev. — #3

9 sec / rev — #4

8+ — #5

9 sec / rev — #1

as operated

$\frac{9 \text{ sec}}{\text{rev}}$ =

$\frac{1}{9} \frac{\text{rev}}{\text{sec}} \times \frac{60 \text{ sec}}{\text{min}} = 6.6$ rpm

Mike W of MEC

Verified this as correct

doesn't change per Mike W.

$\frac{1 \text{ rev}}{5 \text{ sec}} \times \frac{60 \text{ sec}}{\text{min}} = 12$ RPM

Bulldozer
e thought
that
od to
treating
ood had
that";
cedure; always
Trq'd from dryers,
ner on
estical

07 1052

07 1053

testing still in progress

6pm yard check - new wood being put on storage pile. Saw one stack of apparently green wood going to debarkers. Did not see any old wood on trucks. Truck drivers told me all wood was coming from outside of L-P's facilities at Silsbee - weren't using old wood (They would probably save old wood for "wet" periods when other lumber was not available - my feeling. (except when they can put some in to reduce emissions during testing (also my feeling).

Stacks 4 and 5 look the same - no water vapor.

1, 2, 3 all have about same water vapor content. But, I looked at them later and all lacked water vapor (

Summary of Thurs 2/27:

- dryers over 820°F frequently
- dryer lbs/hr greater than 14,800 frequently
- facility using dry wood possibly to try to cut emissions
- opacity almost always > 25%
  (what is TX limit?) → 20%

07 1054

- need op. conditions of 9/24-26/97 stack test
- want stack test on dryer 1 even w/o MEC T-O

storage
green
-see
Drivers told
ide of L-P's
ed wood
wood for
ber was not
accept when
ence
also my

me —

me Water

l at them later

so frequently
r emissions

%

20%

07.1054

tack test
-0

— get incoming moisture overnight

— check dumps of 2/27 were they all tared and all done correctly?

2/28/92 - Friday — 8:30 AM

Older logs being piled in separate pile again. Also saw trucks being loaded with older logs on plywood mill property. Older logs being put into debarker (#2)

8:40 Running 19/32" line speed 65
T-O heater 417°F Density 43 lbs/ft³
press loads 13/hr.

8:50 truck of newer logs came in - They were put on storage pile

Kirby ~~[illegible]~~ Internal "transfer truck" - yellow, without plates brought in older logs

I cautioned Ed Knight about biasing test results by drying older dried wood. He said They always try to use the older wood first. They're using logs from plywood mill pile now because They've had less wood coming in from forest lately. He said They've been doing this all week. I said - no, not on Mon-Wed.; They were ~~to~~ drying greener wood then. I said he and I should speak with Boswell about their procedure

07 1055

		8:45am	10:15	10:55	about 1:45	12:20	3:40	4:47pm
2/28/92	Drum 1							
Inlet T		850	821	807	856	836	818	849
Moisture (OUT)		8		8.7	7.6	7		7.0
Line Speed		22	22	22	22	22	22	22
Fuel Count		319995	320376		326751	320996	321685	321982
opac.		28	22	22	24	21	19	19
	Drum 2							
T		813	815	824	804	809	817	827
moist		7.4		7.0		7		7.0
L.S.		22	22	22	22	22	22	22
F.C.		576400	575846		576338	576668	577508	577861
opac		19	22	22	19	22	18	20
	Drum 3							
T		832	840	807	823	819	815	859
moist		10.6		8.5		11.6		10.0
L.S		23	24	24	24	24	25	25
F.C.		347387	349893		350394	350446	351676	352054
opac		28	24	24	24	24	22	22
	Drum 4							
T		864	847	820	811	754	828	820
M		10.5		8.0		8		8.5
LS		23	24	24		24	26	25
FC		866464	867202		867730	867990	869148	869519
opac		28	22	22	24	24	21	19
	Drum 6							
T		855	801	810	841	863	909	855
M		9.8		8.0	12.0	9		9.0
LS		25	25	25	25	26	24	24
FC		449942	449942	43	450285	450559	451729	452155
opac		21	39		46	42	37	45

Northern Ills Incinerator Incinerator Incinerator Incinerator Incinerator Incinerator

07 1058

NO THROUGHPUT DATA 1608

Ed K. said they never load green wood directly into debarker (unless trucks are lined up and the debarker is calling for wood — then the green wood would go directly from truck to debarker in order not to hold up the trucks.

Randy Norwood (409) ~~838-0397~~ → 898-3838

J. Boswell letter to Randy Norwood of TACB, 5/14/90

Deadwood — storm and beetle damaged wood
most of deadwood
Moisture content of dead wood is 25%?

Green wood 50-55 % moisture

Per Marion Everhart of TACB, Beaumont
30% prior to 1972
20% after that

we never saw any this low in moisture during testing but some got to 36-39%

Mike Hudson, MEC, says this plant loses 15% to fines alone. Northern plants lose about 8%. The drier the wood, the more fines. Don't want wood to get too dry. Want to dry the older wood first if you can.

Northern hardwoods have more moisture — almost 100% They need higher Ts to dry it.

	wet bin incoming wafer moisture	dryer
Moisture content	42%	#1
	47	#2
	48	#4

10:15 fuel usage #4 - 2471 lbs/hr. #3 2090 lb/hr.
#1 - 1575 #5 2354
#2 - 2609

07 1057

Y of 92 Dmn 1

Inlet T

Moisture (out)

8:45 am 850 8

10:15 821 7

10:55 807 817

11:45 about 1 hr 856 7.6

12:20 826 7 22

3:40 818 22

4:47 pm 849 20 22

[redacted]

(*) will wait to do next PM-10 on Stack #1 until leaching day next week (Wed.) 3/4

Stacks 1 and 2 - T-O heater running 20% gas

PM 10 ← Stack 2 - 1st run - might have lower emissions. 2nd run 3rd run

runs do not have T-O emissions

(*) T-O heater needs cleaning, may be on partial gas for several days

truck dumps to get lbs/hr for dryer #4

~9 am - 10:30 am

empty 13080	13 860	→	780 x20 =	15,600
	13 820	→	740 x20	14,800
	13 840	→	760 x20	15,200

empty 13060

760 20 / 6 20 "

(*) We took moisture sample at waferizer when a load of older wood was going through.

Result: 51% waferizer 1 46% waferizer 2 @ 11:00 AM

[41% at 10:00 AM waferizer 1] → not sure if these were from old logs

These do not indicate older logs had less moisture

(*) Digital and strip charts for dryers do not agree;

Dryer	S.C.	Digital (Inlet T)	Digital Δ
5	800°F	819°F	+19°F
4	770	815	+45
3	800	857	+57
2	800	826	+26
1	800	841	+41

07 1058

D.

Dryer

5

4

3

2

1

12:

tn

#1 dryer

Incoming moisture

42%

[redacted]

[redacted]

n Stack #1 3/4
next week (Wed.)

20% gas
have lower

may be on

15,600
14,800
15,200

ja when
through
yerizer 2 @11:00 AM
ure if these were from

do

al

9 °F

15

7

6

07 1058

Difference between strip chart and digital moisture:

Dryer	S.C.	digital Moisture	digital Δ
5	7.3%	9.3%	+2%
4	6.3	7.4	+1.1
3	7.3	8.7	+1.4
2	Not working	7.6	—
1	4.0	5.9	+1.9

12:15 pm 4 trucks lined up waiting to unload logs
truck (1) newer logs go to storage pile
(2) Crane takes old logs from special pile to send to debarker while 4 trucks wait
New log truck backs into place
Crane takes new logs to new log storage piles.
There's always a pile of older logs to put into debarker
(3) (4) > These trucks continued to wait 15-20 min

finally saw some newer logs from #2 go into debarker as truck #3 pulled up
They were "newer" but not real green like some on other trucks

#1	dryer 2	#3	#4	#5
Incoming moisture		43%	48%	47%
42%	44		44%	46
	47			49.5
	48			

not that low, even with "older" logs

07 1059

[redacted]

1st Run on #5 dryer for VOC, PM, CO complete at approx. 11:50 AM 2/28/92

(*) Al Bardur noted stack at end of bldg., past NO.1 dryer stack, which is always emitting lots of particulates — it looks like a cyclone is being ~~of~~ by-passed and uncaferize emissions are going directly to atmosphere. NO.1 stack has particulates all over it — largely from this stack

metal screen built in front of stack.

2pm Fred Calvin

(*) Calvin says this should go through cyclone for fuel bin or cyclone to dump ~~it is apparently bypassing both cyclones~~

CP003 cyclone needs bags or is sized wrong per Calvin Gore.

They fixed this at about 4pm per Al B. → put it through ~~dump~~ raw fuel cyclone

(*) Al B. says cyclones have ~~been~~ not worked ~~bypassed~~ all week (M → today, Fri 2/28)

They've been bombarded with particulates while stack sampling.

2:05 pm Press loads 15+/hr. 7/16"

T-O 420°F

density 42.1 lbs/ft³

line speed 82.5

Boswell says it automatically dumps when fuel bin is high.

2/28/92 Dump to determine lbs/hr on Stack #5 ~3:30pm

dump ran for 3 min 20 sec. = 3.33 min

(*)

$\frac{3}{60} = \frac{1}{20}$

$\frac{3.3}{60} = \frac{1}{18.18}$

$\frac{\text{lbs}}{3.3\text{ min}} \times \frac{60\text{ min}}{\text{hr}} = \text{lbs} \times \frac{18.18}{\text{hr}}$

07 1060

820 lbs × 18.18 = 14908 lbs/hr

but Kirby will have 820 × 20 = 16,400

Burner NO.1

$\frac{6.2}{8} =$ .775

Co complete

bldg.)

his always
ooks like
and
g to atmosphere
it –

front

ays cyclones
worked all
today, Fri 2/28)
bombarded with
stack sampling
7/16"
°F
.1 lbs/ft³
82.5

~3:30pm

min

07 1060
8.18
hr
lbs/hr
16,400

Calvin's next dumpon ~~[illegible]~~ stack was
3:00:25 on #5 dryer
at about 3:40pm – 3:45pm

16,000 lbs/hr

4pm – Press loads 16/hr. T-O 420°F
82.5 line speed 7/16" board

average fuel usage during 8:45am – 4:45pm

Burner No.1

321982
319995
1987 revs × 6.2 lbs/rev ⟹ 12,319 lbs / 8hr.

= 1540 lbs/hr.

2

577 861
575 400
2461 × 6.2 ÷ 8 = 1907 lbs/hr.

6.2/8 = .775

3

352 054
349 387
2667 × 6.2 ÷ 8 = 2067 lbs/hr.

4

869 519
866 664
2855 × 6.2 ÷ 8 = 2143 lbs/hr.

5

452 155
449 142
3013 × 6.2 ÷ 8 = 2335 lbs/hr.

07 1061

[redacted]

2-29-92

Sat 2/29 8:30 AM

T-O heater 419°F 7/16"

density 42.3-42.9
16 press loads / hr.
line speed 82.5

Noted big opening in Press area roof just ~~above~~ to right (as viewed from press console in office) of press vents - might have been used to raise equipment to roof (~20' x 1' opening). For umbilical cord. ~~Also~~ This opening was closed later - see notes.

unloader vent gets much less of emissions when this opening is there. Press vents also get less.

They ran 1/4 on night shift (for short time) density = 49 lbs/ft³ - has to be this high to be able to cut it with saws.

Facility really looks hazy after they have run Thinner boards for awhile (7/16" or ~~less~~ Thinner)

Crane ~~Trucks~~ still ~~unloading~~ older logs first into the debarker.

Forming line has no vents - only openings in roof - area is very hazy all the time. Only roof monitor lets haze slowly out.

PM 10 sampling team won't show up until Monday. No Tests on dryer stacks today. Only formaldehyde test on unloader vent today.

Waferizer incoming moisture → #1 46%
9:30 AM → #2 44%

See Ed

Took at past waferizer moisture records wk of 2/10 and 2/17

07 1062

Drier ①	16
Opacity	22
inlet T	8
Fuel count (lbs/hr)	326
Mois in	
Mois OUT 8AM	7
Line speed	2
②	
Opacity	2
inlet T	84
Fuel count	583
Mois in	
Mois OUT 8AM	7
L.S.	2
③	
Opacity	3
inlet T	86
fuel count	357
Mois in	
Mois OUT 8AM	7
L.S	2
④	
opac.	2
inlet T	8
fuel count	87
Mois in	
Mois OUT 8AM	
L.S.	
⑤	
Opac.	
inlet T	9
fuel count	4
Mois in	
Mois OUT 8AM	
L.S.	

2-29-92 [NO Tests on drier stacks This day (Sat)]

...ty 42.3-42.9	Drier ①	10AM	11AM	2:45pm	4:07	5:28PM
...ness loads/hr.	Opacity	22	22	21	22	21
Speed 82.5	inlet T	830	831 (1693)	855 (1721)	832	853
7	Fuel count (lb/hr)	326769	327042	328083	328444	328792
	Mois in					
...ffice) of	Mois OUT 8AM	7.6		7.6	7.0	
...ie equipment	Line speed	23	23	23	22	22
...ical cond.	②					
...e notes.	Opacity	29	27	24	29	29
	inlet T	848	859 (2145)	871 (2171)	862	851
...ne)	Fuel count	583 809	584 155	585 468	585 925	586 353
...ies high	Mois in					
	Mois OUT 8AM	7.0		7.5	7.6	
	L.S.	24	24	23	22	22
...ve run Thanna	③					
...a)	Opacity	32	38	35	34	32
	inlet T	864	877 (2120)	900 (2192)	882	898
... into the	fuel count	357905	358 247	359 573	360 045	360 516
	Mois in					
	Mois OUT 8AM	7.5		10.2	9.0	
...ly	L.S	26	27	25	25	25
...hazy	④					
...haze slowly	opac.	27	24	21	36	19
	inlet T	852	855 (2257)	846 (2249)	837	804
...up until	fuel count	875822	876 186	877 546	878 038	878 513
today	Mois in					
...t today.	Mois OUT 8AM	9.0		10.5	9.0	
...6%	L.S.	25	25	24	23	26
...4%	⑤					
	Opac.	31	29	38	42	38
...ds	inlet T	831	832 (2207)	813 (2222)	815	808
	fuel count	458764	459 120	460464	460 923	461 393
	Mois in					
	Mois OUT 8AM	9.3		9.5	8.9	
	L.S.	24	24	23	22	23

07 1062

07 1063

Counter

T-6 fuel usage: 9:58 AM
was on gas at 10% 10:58 →

245 349
245 686
x 6.2 lbs/hr.
2089 lbs/hr.

10 AM — Kirby truck with ½ old logs ½ newer logs came in and crane took those directly to debarker.

(*) chuck

(*) I noted from my notes that Wafirizer moisture was about the same on Mon 2/24 as on 2/26 Wed → Fri 2/28 when they seemed to be using more older wood. Maybe wood has to really be "dead" before it has an effect on overall moisture or emissions. We should ask chuck if he knows what moisture content leads to lower emissions. Also ask J. Boswell.

chuck didn't know.

(*) Calvin W. said he trust strip chart reading more than digital Calvin — says he trusts digital more. 1st Calvin said digital has to be about 860°F on dryer # 3 to be about = 820°F. (my observation says digital is about 57°F higher). Which Temp. is correct?

I told Danny about opening in roof and how it would affect formaldehyde determinations, he

07 1064

line (input)

2/26

2/28

890°F 1.5 = 25 26 2/29

Counter

245 349
245 686
x 6.2 lbs/hr.
2089 lbs/hr.

½ newer
Those directly

as about
as on
seemed to
wood
before
~~[illegible]~~
~~[illegible]~~
~~[illegible]~~
content
also ask

chart reading

ays he trusts
digital has
to be

vation says
which

l how
ns, he

07 1064

get crew to put tarp over opening. Some open area remaining but it's miniscule - will not have impact on HCHO determinations

~~[illegible]~~

Switched to
20% gas usage on T-0:

12:24 pm 246 060
11:24 Am 245 824
236 x 6.2 = ~~[illegible]~~ 1463 lbs/hr wood

[reduction in wood burned of about 30% for 10% increase in gas fuel.

Presovent # (unloader vent)

(*) started 1ST HCOH run w/o tarp on opening after 15-30 min Al Bandur plugged opening ½ of way. For next 2 runs vent will be plugged all the way.

11:57 Am T-0 421 °F Press loads - 16+ /hr.
7/16" line speed 82.5
density 43.0 lbs/ft³

Get ready for dump to determine dryer lbs/hr. on dryer NO. 3 (running hot and at fairly high line (input) ~~line~~ speed). Compare to our dryer NO. 3 test runs (no test run this day, just got lbs/hr for comparison and to determine how furnish rate may vary day-to-day.

2/26 14,400 14,000 13,600 | 900°F I.S.=26 14,800 14,000

2/28 | 807°F I.S.=24 14,800

890°F I.S.=25/26 2/29 | 890°F I.S.=25/6 16,400

07 1065

(*) Mike Hudson / Mike Weindorfer of MEC said that digital read out for inlet Temp is probably closer to the ~~accurate~~ real Temp Than is The strip chart (S.C. easily biased by handling, changing)

(*) Rich I / Al B. noted ~~[illegible]~~ red color on ~~[illegible]~~ roof of a stack

3/1/92 Al B. looked using while on roof liquid particles coming out at good rate.

and it was Vent for blender, when resin is mixed. → CP-002 EPN 13

2-29-92 (*)

Should be tested for formaldehyde. I did not see any emissions coming out of this stack, however maybe it was a start-up problem?

(*) PM-10 had break Throughs on filters, ~~[illegible]~~ labels on bottles (with liquid inside) That were not readable due to dripping water. Dryers #2 and #3 might be affected. Sloppy work in general. We told Danny and J. Boswell.

VOIDED original test on dryers 2 and 3 and retested.

(*) Wan

2:00 pm Press check press loads/hr = 16+
7/16" 82.5 line speed T-0 = 120°F

(*)

2:50 pm T-0 246 549
12:24 pm 246 060
489
x6.2 ÷ 2 hrs 26 min

2 hrs 26 min = 2.43 hrs

on 35% wood 65% gas now

= 489 x 6.2 ÷ 2.43 =

1248 lbs/hr

fines — all 5 → dryers screened fines

07 1066

(*) Bu

said that
bably closer
he strip

roof of a stack
on ~~roof~~

esin is

I did not
this stack
oblem?

n filters,
liquid
due to
#2 and #3
work in general

T-O = 420°F

2 hrs 26 min

2.43 c

s/hr

07 1066

1249 = .36 x c

c = 2,7806 = ~~3.9 tons~~ 3469 lbs/hr. = 1.7 tons/hr.

capacity of T-O, calculating backward from usage and % capacity number on wood control and gas control meters. It is the same as the dryer burners ~~for press~~ so 1.7 tons/hr. is about right.

2-29-92

Press down for 17 min during 2:45 - 3:45 pm
No press cycles. When up, still operating at 16 press loads/hr on 7/16" board, T-O at 413°F

Face Resin feeder 6.5 %
V ≅ 2650 lb/hr. O = 60%

Core Resin feeder 2.00%
V ≅ 570 lb/hr O = 12%

Want to look at fully enclosed press at some other mill to see what it's emissions are compared to Kirby. Then we can estimate what fugitive losses might be.

Fines - from ~~to~~ 6 min dump (Mike W of MEC Coordinated)

all 5 dryers screened fines → 11,200 lbs/hr fines ÷ 5 dryers 2240 lbs/hr. per dryer

07 1067

For 16,400 lbs/hr. 8% moisture, 2240 lbs/hr. fines

actual dry furnish rate: 16400/1.08 - 2240 = 12945 lbs/hr.

But, how does state measure #/hr for permit purposes? Should be based on wafers ± fines + mois?

(*) if average dryer rate is 16,400 lbs/hr

% of fines is $\frac{2246}{16400} \times 100\% = 14\%$

and higher for lower production dryer runs. Say on avg it's 15% loss to fines, Doesn't count trim and sanding losses. This is higher than Biswell and Northern Div. have usually estimated in permit applications. This would encourage higher dryer production rates to meet square feet goals!

- or are they drying lower moisture wood, than usually which creates more fines per Mike Hudson?

(*)

All burners are the same - T-O and dryers 36 mm BTU/hr might need to increase T-O capacity in the future - it's maxing out. Backdraft from going through dryers 1 and 2 causes shell temp to get too high.

Sun. 3/1/92

82.5 line speed, 7/16" board
T-O 419°F Press loads = 16/hr.
density 43.4, 42.9

Did 1/4" again last night - density 49-48

Mike W and Dick of MEC said
low fire 3 mm BTU/hr dryer & T-O
% on fuel meter is % of high fire rate
63.6% = 63.6% of 90% (63% of 32 mm BTU/hr)

T-O and dryer burner design 36 mm BTU/hr
90% (high fire rate) 32
10% (low fire rate) 3

9:25 AM T-O heater 251132 10:37 251 472
wood control meter 63.6 % 07 1068

10 AM 16 press loads/hr 82.5 line speed 7/16" 420°F
density ~~[illegible]~~ 42.8 42.9 43.1

Dryer ①	9:
opacity	2
inlet T	8
(lbs/hr)	33
Fuel	
mois in	
mois out	
Line speed	2
②	
op	2
T	8
Fuel	59.
M in	
M out	
L.S.	2
③	
op	29
T	85
Fuel	366
M in	
M out	
L.S.	2
④	
op	2
T	8
Fuel	884
M in	
M out	
L.S.	2
⑤	
op	3
T	8
F	4
M in	
M out	
L.S.	

Sun. 3/1/92

op. chris for Greg

	Drum ①	9:20AM	10:35	11:35	12:20	4:15	6:20
0 lbs/hr	opacity	23	22	27	24	21	24
% = 14%	inlet T	862	822	858	824	831	854
	Fuel (lbs/hr)	333146	333514	333824	334046	335163	335773
tion dryer	mois in						
	mois out		6.8 8AM	8.5	7.0	6.0	
5% loss	Line speed	23	23	23	23	23	23
– fusion							
	②						
his is higher	op	24	20	44	22	21	15
we usually estimated	T	840	841	862	831	824	788
encourage higher	Fuel	591501	591927	592270	592523	593795	594499
t goals!	M in						
and dryers	M out		8.2 (8AM)	7.8	8.0	7.0	
increase	L.S.	23	23	22	22	22	22
it's maxing							
rough dryers	③						
t too high	op	29	35	32	32	22	22
	T	856	876	904 → 915 at 11:43	865 (2172)	815	795
	Fuel	366094	366524	366875	367145	368438	369137
	M in				9:20–12:20		
oard	M out		8.4 8AM	10.0	10.5	9.0	
oals = 16/hr.	L.S.	24	26	26	25	24	24
	④		#3 switched to core at 11:20AM		switched back to fuel		
– density 49–48	op	22	30	28	22	19	24
	T	822	867	879	837	775	837
	Fuel	884386	884855	885225	885505	886830	887591
& T–O	M in						
	M out		8.5 8AM	9.0	9.0	8.0	
igh fire rate	L.S.	26	26	26	26	26	26
c (63% 832 mm BTU/hr)	⑤				11:35–12:20		
10:37 251 472	op	38	47	47	52	38	45
	T	800	838	862	921 (2447)	838	857
7 1068	F	467208	467665	468038	468334	469668	470416
	M in						
7/16" 420°F	M out		8.5 8AM	9.8	9.5 07	1069 8.5	
	L.S.	24	26	25	24	23	23

get EPN NOS for Press Vents

For mom will probably sample } HCOH → dryer stack 3
PM10 → dryers 4,5
PM → Press Vents 1,3

- ask Chuck about lower emission rates based on wood moisture

get Rich D to check estimate for HCOH for EPN 13 CP002

- Get wafer moisture s over last week (dryer report)
- Ask Boswell re CP002 - EPN13

- have Rich D look at enclosed presses - what are emissions for VOC / capacity / size / wood etc. (to get positive loss estimate for silo bee
- Retest PM10 dryer stack 3 and 2

When? Sayda Hayward anywhere in South.

wafer moisture	39%	43%	3/1 Am
	47	50	2/29 PM
	41	51.4	2/29 Am

$\frac{38}{60} = 6$

T-O fuel usage 9:25 - 10:37 Am
1 hr. 12 min = 1.2 hr.

$340 \times 6.2 \div 1.2 = 1757 \frac{lbs}{hr.}$

and its on partial gas
switched to full gas ~ 10:30 Am
due to high shell temp.

~~10-11 Am Stacks 1 → 3 low water vapor~~
~~4 → 5 higher water vapor content~~

07 1070

Now
Ch
not
do
12:10 pm
a
w
g
4:15 -
c
T-O

·3

1.3
wood moisture
HiOH

week (dryer report)
V13

what are
/ size / wood
e

3/1 Am
2/29 pm
2/29 Am

7 Am
min = 1.2 hr.

7 lbs
hr.

10:30 Am
up

ate / vapor
water
vapor content

07 1070

New shift dryer operator (for us, while on duty) Chris, said operators read strip charts not digital. I said no, some do and some don't.

12:10 pm 7/16", 16 press loads / hr.
line speed 82.5 T-O 419°F
all ok all day so far on press; no breakdowns will run 7/16" all day unless dry bins get down

4:15 - T-O heater fuel usage 252 334
5% of 90% of wood fuel capacity (32 mm Bt
Chris changed to 10% when I asked about it at 4:15 pm

38 = 6
60

252 334
− 251 472
862

10:37 Am − 4:15 pm > 5 hr. 38 min
5.6 hrs.

T-O usage 862 × 6.2 ÷ 5.6 = 954 wood lbs/hr.

T-O cheater still having high shell temp problems. Put on gas but it hasn't brought it down
Went up to 10% wood since 5% didn't help any

~~Moisturizer~~ Wafer izer Moisture Sample taken 5:00 pm #1 51% #2 52%

looked like newer logs or combination of older and newer to me on visual check of debarker and crane loading logs.

07 1071

[redacted]

Overtime Log: Silsbee, TX

Sun. 2/23	12N – 8pm	8 hrs. travel	
Mon. 2/24	—	—	
Tues 2/25	5:00 – 9:30	~~5 – 9:3~~ 4.5	
Wed 2/26	5: – 7	2	
Thurs 2/27	~~5~~ – 6:30	1.5	Our
Fri 2/28	5 – 6	1	
Sat 2/29	8:30 – 6:30 (1 hr break)	9	
Sun 3/1	8:30 – 7:00 (2 hr. break)	8.5	
Mon 3/2	5:00 ~~8:00~~ – 8:00	3	
Tues 3/3	5:00 – 6:00	1.5	
Wed		0	
Thurs		0	
		39 hours	

07 1072

[redacted]

rs. travel

4.5
2
1.5
1
9
8.5
3
1.5
0
0

39 hours

Chris said "normal" range is 40–55%
with most frequent moisture being
44%

	al's recordings	Rich Ida's read
Our samples taken during testing		
	36 1	1
	37	
	38	1
Laferiza	39 11	11
	40	
	41 11	1
	42 1	1
	43 1	1
median	44 111	median 1111
	45	11
	46 11	11
	47 111	1
	48 1	
	49	
	50 11	11
	51 11	11
	52 1	
	53	

Median is about where Chris (dryer op.) said it was historically.

5:45pm Press loads per hour = 16+
T-O 418°F 7/16" 82.5
Press operated ~~without~~ missing maybe only one cycle all day.
Density all day 42.2 – 43.4 lbs/ft³

1072

07 1073

~~S = 2526~~ Blender Meters

Scale C: Face feeder
6.5% of wafer wt is resin
~ 2500 lbs wafer
~ 2500 lbs/hr resin use rate

Scale D: Core feeder
~ 626 lbs wafers
~ 616 lb/hr resin
2% of wafer wt is resin

(*) Looking at forming line from beside press console room, haze going up from former seams to drift away from press (it's not being captured by Press vent fans) and toward remaining openings in roof

9.5

Mon. 3/2/92

(*) Laxmi agreed to not do PM-10 on Press vents (too light a collection on 1st attempt). We do want VOC and HCOH on EPN 13 CP002.

Have state do →

07 1074

(*) ✓ Have Than do dryer stacks #2 and #3 over for PM10 but drop PM-10 on press vents.

(*) Danny Russell of EML said he and Biswell agreed that almost all PM from Press vents is PM-10.

Drier ①	9:4
opacity	22
inlet T	85
Fuel	340
Mois OUT	8
line speed	22
②	
opacity	26
inlet T	86
Fuel	599 6
Mois. OUT	7
line speed	22
③	
opacity	29
inlet T	84
Fuel	374 2
Mois. OUT	9
line speed	24
④	
opacity	24
inlet T	87
Fuel	892 6
Mois. OUT	10
line speed	26
⑤	
opacity	38
inlet T	83
Fuel	475
Mois OUT	9.
line speed	22
T-O	
Meter gas fuel	no
Meter wood fuel	259 0
T shell	
% gas setting	0
% wood set.	70.

[redacted]

Mon 3/2/92

Drivers

C = Core
F = Face

	Drier ①	9:40am	10:45	11:45	1:40	3:30	4:30	6:10	7:10	8:20 after testing
	opacity	22	19 ~~24~~	23	19	22	33	22	15	10
	inlet T	852	842	845	795	780	875	791	724	747
	Fuel	340196	340497	340785	341341	341850	342126	342568	342823	343087
	Mois OUT	8		8	8.5	8.0	8.0	8.5		
	line speed	22C	24C	23C	24C	24C	24C	21C	20C	20C
	②									
se rate	opacity	26	22	23	22	22	20	15	19	16
833	inlet T	866	837	833	851	864	845	790	809	804
	Fuel	599619	599961	60270	600863	601475	601807	602313	602615	602972
7.3	Mois. OUT	7		6	7.0	8.0	7.8	8.0		
	line speed	22C	22C	22C	22C	22C	22C	21C	21C	20C
	③									
	opacity	29	32	35	30	34	30	15	16	12
sin 777	inlet T	844	836	820	790	818	822	660	729	670
	Fuel	374277	374637	374958	375595	376208	376541	377062	377362	377709
8.7	Mois. OUT	9		7.5	9.0	9.5	9.0	8.0		
beside	line speed	24F	24F	25F	25F	25F	24F	21F	21F	21F
going up	④									
away from	opacity	24	22	23	26	22	27	Flame out at 6:10pm (2-3 min down)	26	19
	inlet T	871	871	824	850	843	844	683	850	814
ptured by	Fuel	892646	893045	893382	894065	894710	3 895077	895646	895992 (2184 lbs/hr. from 9:40-7:10)	896430
	Mois. OUT	10.5		8	10.0	8.0	10.0	10.0		
ward	line speed	26F	26F	25F	25F	25F	25F	25F	25F	26F
in roof	⑤									
	opacity	38	38	35	35	42	43	38	42	36
95	inlet T	833	835	833	822	860	852	828	812	816
	Fuel	475726	476081	476416	477066	477681	478050	478626	478957	479372
o on Press vents	Mois OUT	9.0		8	10.0	10.0	10.5	8.5		
pt). Wedo	line speed	22F	22F	22F	22F	22F	22F	22F	22F	22F
3 CP002.	T-O									
1074	Meter gas fuel	none	Some	lots	some ~~lots~~				07	1075
er for PM10	Meter wood fuel	259087	259597	259728	259994	260328	260583	261443	262002	262514
vents.	T shell			195	185	188	196	203	203	200
ed that abrupt	% gas setting	0	25	95.3	6.2		0	0	0	82
	% wood set.	70.9	—		0	30.1	91.4	87.4	100	10

[redacted]

Mon 3/2/92 — Dryers

C = Core
F = Face

Drier ①	9:40am	10:45	11:45	1:40	3:30	4:30	6:10	7:10	8:20 after feeding
opacity	22	19	23	19	22	33	22	15	10
inlet T	852	842	845	795	780	875	791	724	747
Fuel	340196	340497	340785	341341	341850	342126	342568	342823	343087
Mois OUT	8		8	8.5	8.0	8.0	8.5		
line speed	22C	24C	23C	24C	24C	24C	26C	20C	20C
②									
opacity	26	22	23	22	22	20	15	19	16
inlet T	864	837	833	851	864	845	790	809	804
Fuel	599619	599961	602270	600863	601475	601807	602313	602615	602972
Mois. OUT	7		6	7.0	8.0	7.8	8.0		
line speed	22C	22C	22C	22C	22C	22C	21C	21C	20C
③									
opacity	29	32	35	30	34	30	15	16	12
inlet T	844	836	820	790	818	822	660	729	670
Fuel	374277	374637	374958	375895	376208	376541	377062	377362	377709
Mois. OUT	9		7.5	9.0	9.5	9.0	8.0		
line speed	24F	24F	25F	25F	25F	24F	21F	21F	21F
④									
opacity	24	22	23	26	22	27	Flame out at 6:10pm (2-3 min down)	26	19
inlet T	871	871	824	850	843	844	683	850	814
Fuel	892646	893045	893382	894065	894710	895077	895646	895992 (2304 lbs/hr. from 9:40-7:10)	896430
Mois. OUT	10.6		8	10.0	8.0	10.0	10.0		
line speed	26F	26F	25F	25F	25F	25F	25F	25F	26F
⑤									
opacity	38	38	35	35	42	43	38	42	36
inlet T	833	835	833	822	860	852	828	812	816
Fuel	475726	476081	476446	477066	477681	478050	478866	478957	479372
Mois OUT	9.0		8	10.0	10.0	10.5	8.5		
line speed	22F	22F	22F	22F	22F	22F	22F	22F	22F
T-O									
Meter gas fuel	none	Some	lots	~~lots~~ some				07	1075
Meter wood fuel	259087	259597	259978	259994	260328	260583	261443	262002	262514
T shell			195	185	188	196	203	203	200
% gas setting	0	25	95.3	6.2		0	0	0	82
% wood set.	70.9	—		0	30.1	91.4	87.4	100	18

se rate

in

beside
going up
away from
ptured by
wood
is roof

9.5

o on Presses
pt). Wade
cpoon.
1074
for PM10
ed that abupst

Input Moisture of Wafers

Mon 3/2/92

wood Visual (green or aged)	Wagerizer #1	#2	Wet bins	moisture	Time	Time	Board Thickness
	46	46	~~dryers~~	—	0630	9:35 AM	23/32
green	—	—	Dryer # 3	47	0930	10:40	23/3
green			# 5	43	1005	12:20	23/3
green			# 5	47	1050	1:15	23/32
			# 4	45	1120	(*) down at 1:1	
			# 3	50	1135	I tied Down	
			# 4	42	1220	portion in	
			# 3	50		2:20	23/3
			# 5	48		4:10	23/3
			# 4	49		5:40	23/3
			# 5	57	3:35		
			# 4	49	3:35	5:50	3/8
			# 2	48	5:10	6:55	3/8
			# 4	43	5:40		cycle +
			# 5	47	5:40		my mean
Raining → TUES 3/3/92			# 3	49		7:50pm	3/8
Mostly green			# 2	47			
(newer) being			# 2	43	10:35		
unloaded. Saw 1st			# 3	51.4	10:[illegible]	8:30am	7/4
older wood at 10:35			# 3	45	11:55	10:30	7/
but it was unloaded			# 3	48.6	1:40	12:15	7/
To storage pile			#1	46	~12:30	3:15	7/1
			#1	47.4	1:40	5:15	7/
			#3	47	3:40	6:40pm	7/1
			#3	45.2	2:40		

07 1076

Mon. 3/2/92, TUES 3/3/92

Press 3/2/92

Moisture	Time	Time	Board Thickness	Line Speed	T-O Temp	# Pressloads per hour	Density	Core Resin	Face Resin
—	0630	9:35 AM	23/32	50	422°F	10	42.3-43.3 (4 tests)	2.5% 725 lb/hr	7% 2875 lbs/hr
47	0930	10:40	23/32	50	420	10		2.5% 683	7% 2793 lb/hr
43	1005	12:20	23/32	50	420	10		2.5 710 lb/hr	7% 2697 lb/hr
47	1050	1:15	23/32	50	423	10	42.3-42.7 (3)	2.5 707	7 2623
45	1120	(*) down at 1:11 pm - down time 12 min (saw blade) ~~[illegible]~~							
50	1135	I told Danny Russell. He had seen it on chart and will not include this							
42	1220	portion in his averaging.							
50		2:20	23/32	50	418	10		2.5% 751	7% 2916
48		4:10	23/32	55	420	10.5	41.8-42.3 (3)	2.5 712	7 2923
49		5:40	23/32	55	420	11+		2.0 623	6.5 2578
57	3:35			switched to 3/8" board at 5:45 pm					~~[illegible]~~
49	3:35	5:50	3/8	82.5	421			2.0 465	6.5 1933
48	5:10	6:55	3/8	82.5	420	16	45	2.0 475	6.5 2337
43	5:40	cycle time for 3/8" board 189 sec. per console monitor							
47	5:40	my measurement - one press entry (all 12 boards) to the next: 3.5 min							
49		7:50 pm	3/8	82.5	420	16	45-46.49 (*)	2.0 488	6.5 2427
47					3/3/92 TUES				
43	10:25							2.0 165 ↓	6.5 2255 ↓
51.4	10:25	8:30 AM	1/4	82.5	409	16 17 every other hr.	45.4-47.2	2.0 205	6.5 2332
45	11:55	10:30	1/4	82.5	405	~16 but 33 min down time	↓	2.0 606	6.5 2575
48.6	1:40	12:15	7/16	82.5	419	16.5	46.3-46.8	2.0 585	6.5 2291
46	~12:30	3:15	7/16	82.5	421	16	42.4-43.4	2.0 535	6.5 2578
47.4	1:40	5:15	7/16	82.5	421	16		2 542	6.5 2659
47	3:40	6:40 pm	7/16	82.5	421	16+	43		
45.2	2:40								

07 1077

7 1076

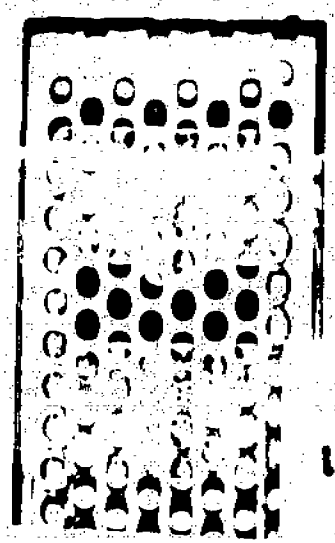

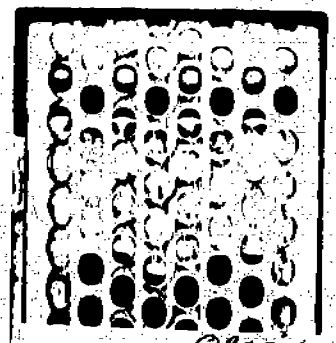

Opacity readings by Phil Schr. of the guard shed

Kirby Forest Products
Silsbee, TX
3/3/92

1:19 PM - 1:23 PM
40-60% Opacity

1:23 PM - 1:26 PM
20-30% Opacity

1:26 PM - 1:29 PM
40-60% Opacity

1:29 PM - 1:30 PM
20-30% Opacity

1:30 PM - 1:33 PM
30-40% Opacity

1:33 PM - 1:40 PM
40-60% Opacity

MJK 9/15/
~~06 1076A~~
11:7 PM

1:40 PM -
20-30% Opacity

#38

Empty 13080 09:50 AM 03/01/92

full 13900 12:35 PM 03/01/92

820
20
16,400 lbs/hr

Mon, 3/2/92 | Sampling |

Source	Pollutant(s)	Run	Start	End	Problems	Time	
dryer # 3	HCOH	1	920	1020		9:45 AM	
		2	1105	1235		~~Phone~~ 10:30	
		3	1335	1435		11	
dryer 4	pm-10	1	1050	1250		12:15	
		2				1:15	
dryer 5	pm10	1	950	1150		3:15	
						4:00	
dryer 5	pm-10	2	1335	1535		4:40	
		3/3/92	TUES				
					HCOH team decided let MEC personnel know they had started tests. Data not being taken. MEC aborted tests. Then team changed stacks. MEC upset — team needs to communicate with dryer room (Dick ___)	9:15	
						10:30	
						10:55	
						12:10	
						12:40	
						Phil Schreindl 1:45 call	
						2:30	
						6 pm	
						6:20	

Phil Schw
opacity re
Time
1:19 – 1:2
1:23 – 1:2
1:26 – 1:
1:29 – 1
1:36 – 1
1:33 – 1
1:40 – 1

07 1078

Background matters a lot

STACK OBSERVATION

Mon 3/2/92

Time	Plume color	Water vapor content	Flow	STACKS
9:45AM	white	Some	high	1 – 5
~~Plume~~ 10:30	Same as above			
11	Same as above			
12:15	Same as above			#2 now showing less water vapor than other stacks
1:15	Same as above			
3:15				1-2 less water 3-5 more
4:00		Same as 3:15		
4:40	grey brown	none	2 lower 1345 high	1 – 5 2 looks less in amiss.

Rainy [3/3/92] TUES

9:15	dark grey	small	1-3 high 4-5 none	←
10:30	"	"	"	←
10:55	"	"	"	
12:10	"	"	1-4 high 5 none	←
12:40	"	small	3 lower others high	1-5 all operating now
Phil Schwindt 1:45	White (but sunis out now)			1-5 all running
Camp 2:30	Brown	small	lower	1-5 all up
6 pm	Red-Brown	small	3-high 1,2,4,5 less	
6:20			3-high still	

Phil Schwindt Region 6 Stack Test Witness did visual opacity readings after his arrival; Looked at ____

Time	Opacity
1:19 – 1:23	40-60%
1:23 – 1:26	20-30
1:26 – 1:29	40-60
1:29 – 1:30	20-30
1:30 – 1:33	30-40
1:33 – 1:40	40-60
1:40 – ?	20-30

7 1078

07 1079

Water lbs/hr.

Mon. 3/2/92

Time	Dryer	Tare	loaded wt.	lbs water + fines	Sample Time	lbs/hr.	Time	T
1120	5	13020	13800	780	3 min.	15600	5:00	
	3			700		14000	5:30	
	4			880		17,600	5:45	
		3/2/92	TUES					
10:45 AM	3			900	3	18,000		
2 pm	1			980	3	19,600		

07 1080

fines determination

Mon. 3/2/92

	Sample Time	lbs hr.	Time	Tare	loaded wt.	fines wt. (lbs) all 5 dryers	fines (lbs/dryer)
3	3 min.	15600	5:00		1360	13600	2720
3		14000	5:30		1280	12800	2560
3		17,600	5:45		1280	12800	2560
					3/3/92	TUES	
	3	18,000					
	3	19,600					

1080

07 1081

TUES 3/3/92

DRYERS

C = Core
F = Face

Dryer ①	9:10 AM (1/4" board)	10:35	12:20 (7/16)	2:35 pm (*)	4:40	6:10	
Opacity	22	19	19	19	15	13	
inlet T	820	860	902	784	754	744	811 = AVG
Fuel	345477	345858	346379	346980	347481	347772	
~~Mois~~ L.S.	19F*	22F	24 C	22C	22C	22C	
②							
Opac.	35	26	24	18	16	22	
inlet T	864	856	855	805	823	834	840 = AVG
Fuel	607253	607697	608279	608994	609630	610039	
line speed	22F*	22F	22F	22 C	22C	22C	
③							
Opac.	39	33	33	32	35	42	
inlet T	843	894	865	812	796	889	850 = AVG
Fuel	382011	382460	383064	383808	384486	384947	← 2023 lbs/hr. 9:10-6:10 pm
l.s.	25F*	26F	27F	24F	25C	26F	
④							
Opac.	4	3**	31	19	14	12	
inlet T	~~740~~	~~713~~	708	742	696	722	717 = AVG
Fuel	900580	900580	900642	901337	901999	902433	
l.s.	0F*	0F	24F**	23F	24F	25F	
⑤							
Opac.	49	21**	38	38	38	38	
inlet T	769	~~121~~	824	751	770	783	779 = AVG
Fuel	483651	483661	483870	484637	485280	485742	
l.s.	20F*	0F	23F	22F	22F	23F	
T-O							
T Shell	168	179	196	198	197	196	
~~Meter gas~~							
meter wood	264955	265465	266303	266707	267104	267367	
% gas	0	0	36+	99.9	100	106	
% wood	70.1	73.7	10.0	15	15	15	

07 1084

(*) = See Phil Schwindt visual opacity readings starting at 1:19 pm (5 pages back)

* Need mostly face on 1/4" board, Just change one dryer over to core periodically. ** This shows that @ 3 and 4 need calibration

*** 40% gas 10% wood setting (standard procedure to restart)

7/16 P.L. = 2304 × .037 = = 36551

1/4" P.L. → 2304

8:30 AM

15/32 (*)

2304 × .039 = 90 ft³ × 43 lbs/ft³ = 3870 lbs.

19/32 C

2304 × .0495 × 42 = 4790

dryer Through

C = Core
F = Face

7/16 P.L. =
$2304 \times .037 = 85 ft^3 \times 43 \frac{lbs}{ft^3}$
$= 3655$ lbs

1/4" P.L. → $2304 \times .0208 = 48 ft^3 \times 46 lbs/ft^3 = 2208$ lbs

$\boxed{3/3/92}$

8:30 AM Raining - very wet.

(**) 1 pressload of 3/8" =
$2304 ft^2 \times .03125 ft = 72 ft^3 \times 46 lbs/ft^3 = 3240$ lbs
1 P.L. of $\frac{23}{32}$ = $2304 \times .0599 = 129 ft^3 \times 42 = 5418$ lbs

15/32 (*) Jim Boswell, actually measured (Method 25A) VOC at Clayton as a function of wax and resin being added to dryer. Saw no difference when resin was not input, but saw a big difference when wax was not input. Wax people say it won't vaporize, but his measurement says it does.

$2304 \times .039 = 90 ft^3 \times 43 lbs/ft^3 = 3870$ lbs.

(*) ⟹ (*) Ed. Knight - no good correlation between live bottom (wet bin) speed and dryer throughput. Compression of wafers in bin can lead to more throughput. Depends on bin level also not just speed.

19/32 C
hr. 9:10-6:10 pm
$2304 \times .0495 \times 42 = 4790$

at Silsbee they moisturize logs in debarker to keep down fines.

(*) J. Boswell says rain doesn't increase moisture. Seasonal differences (more sap in spring) and wood specie make bigger difference

(*) High opacity on dryer #5 during our visit but zero of CEM is high by some 20-21%

Production Mon. 3/2/92:

Shift	ft^2	Downtime
A	523,584	35 min
B	527,046	10
C	0	
D	0	
total	1,050,624	45 min

(**) density $\frac{23}{32} \cong 42$
density $\frac{3}{8} \cong 46$
1 pressload = $12 \times 6 \times 4' \times 8' = 2304 ft^2$
thickness $\frac{23}{32} = .0599'$
$\frac{3}{8} = .03125'$

07 1084

at 1:19 pm (5 pages back)
over to
need Calibration

dryer throughput: $\text{dryer} \frac{lbs}{hr} = \frac{\text{Ton FP} \times \frac{2000 lbs}{\text{ton FP}}}{1 - .22} =$

07 1085

he didn't use these words

J. Roswell said they consider { Center Silsbee to be like their basic design mills now - others are too small to ~~be profitable~~ have enough production

(*) Plant uses % core → 2.0 MDI — 100% solids, all is resin

Face → 6.5% Pf } → 50% solids, 50% water
but only half is resin

(*) Mike W. of MEC says they may increase ID fan acfm on blower stacks and go to higher outlet temp (225°F) in order to reduce condensation in stack and therefore reduce opacity,

~~Prior op — Chris records strip chart inlet temp.~~
~~Calvin W. records digital value~~

07 1086

L.S.	Dr
26	1
~~27~~ 28	14
25	14
26	14
25	14
26	13
	14
~~24~~ 25	14
~~24~~ 25	14
8 | 206	8 | 11
26	Dry
24	
24	
× 24	
~~24~~ 25	
~~24~~ 25	
85200	
22400	
5 | 87600	
17520	
26	
5 | 124	
25	Dry
23	
22	
23	
22	
23	
22	
26	
23	
23	

Dryer throughput vs - Wet bottom speed ("l.s.")
[Smaller # "line speed"]

AVG l.s. 26

Dryer # 3 (AVG 14,700)
(DUMPS)

* Subtracted 15 min from scale time to account for loading, travel

l.s.	throughput	date	time*	T	M
26	18,000 lbs/hr.	3/3/92	10:30 AM	825	9.2
~~27~~ 28	14,400	2/26/92	9:45 AM	805	9
25	14,800	2/26	11:40 AM	807	10.5
26	14,000	2/26	10:41 AM	805	9.8
25	14,000	2/26	1:02 pm	817	9.6
26	13,600	2/26	11:15 AM	805	10
	~~14,400~~	~~2~~	~~9:45 AM~~		
~~24~~ 25	14,800	2/28	11:17 AM	828	11.5
~~24~~ 25	14,000	3/2	10:03 AM	790	8
8 | 206	8 | 117 600				
26	14 700				

Note: interpolated between lbs on dryer logs if possible to get mois. and T

AVG l.s. = 25

Dryer # 4 (AVG 16,300, not counting 22,400)
(AVG 17,520, counting everything)

24	14,400	2/27	4 pm	757	8.6
24	17,600	2/27	5 pm	784	8.8
× 24	22,400	2/27	5:15 pm	784	8.8
~~24~~ 25	15,600	2/28	9:45 AM	827	8.0
~~24~~ 25	~~14,800~~ 16,200	2/28	10:15 AM	827	8.0
6 | 200	~~14,400~~	~~2/27~~	~~4 pm~~		
22 400					
5 | 87 600	~~17,600~~	~~2/27~~	~~5 pm~~		
17 520	~~22,400~~		~~5:30~~		
26	17,600	3/2	10:30 AM	815	8
5 | 124	4 | 65,200				
25	16 300				

(AVG ls = 23)

Dryer # 1 (AVG 15,480) (AVG 15,000 not counting 19,600)

23	14,400	2/27	9:30 AM	777	7.4
22	14,000	2/26	3:58 pm	799	6.5
23	12,800	2/27	10 AM	720	8.0
22	13,600	2/26	4:15	799	6.5
23	15,200	2/27	11 AM	820	7.2
22	19,600	3/3	2 pm	827	7.4
26	16,800	2/24	8:50 AM	792	7
23	16,800	2/24	6:50 pm	820	8
23	16,800	2/24	7 pm	820	7.6

See next page calc.

07 1086

07 1087

154,800
19600
9 | 135200 23 15,600 2/24 9:50 pm
15022 10 | 154800
10 | 230

Dryer #2 (Average 14,571) (AVG. l.s. = 23)

22	13,600	2/28	10:45 Am	820	7.0
23	13,200	2/27	3:30 pm	808	8
24	16,400	2/25	4:55 pm	807	7
22	16,400	2/25	2:15 pm	827	7.5
24	14,000	2/25	7:10 pm	805	7.9
24	14,400	2/25	3:50 pm	827	8
24	14,000	2/25	6:30 pm	810	8.2
7 | 163	7 | 102,000				
23	14 571				

Dryer #5 (AVG. 15,600) AVG. l.s. = 25

25	14,400	2/28	12 N	820	9
24	15,600	2/28	4:25	820	9
25	15,600	2/28	1 pm	825	11
25	16,400	2/28	3:10 pm	825	9
25	16,000	2/28	3:30 pm	822	9
25	15,600	3/2	11:15 Am	800	7.5
6 | 149	6 | 93,600				
25	15,600				

Average - Average
15,000 #1
14,600 #2
14700 #3
16,300 #4
15,600 #5
5 | 76,200
15,240 lbs/hr

Corresponding Press production would be

$$15240 \frac{lbs}{hr} = \frac{\text{Tons FP}}{hr} \times \frac{2000\ lbs}{\text{Ton FP}}$$

$$\frac{\text{Tons FP}}{hr} = \frac{.78(15240)}{2000} = 5.9 \frac{\text{tons}}{hr} \times \frac{24\ hrs}{day} = 143 \frac{\text{tons}}{day}$$

1 PL of 3/8 = 5240 lbs

Forward dryer on 5 x 205 USL = 1,025,240 lbs

3/4/

CE

Metals Inside Control Room

100%	— STA
02	
03	
01	
20	
22500	Nuve
21500	Thes
20500	
19500	Dryer
Throughput 18,500	
17,500	
16,500	
15,500	
14,500	
13,500	
12,500	
20	

3/4/92 All Dryers shut off for maintenance
Al Nugent, Phil Schwindt

Meter Inside Control Room	CEM		opacity (?) on meter in box on Stack Catwalk
↓00%	– STACK → 1	–	30 % ↓
02	2	–	2
03	3	–	2
01	4	–	10
20	5	–	18

→ This meter may not read opacity directly, but the one in the control room is supposed to.

= 23)

820	7.0
808	8
807	7
827	7.5
805	7.9
827	8
810	8.2
820	9
820	9
825	11
825	9
822	9
800	7.5

Tons FP/hr = .78(15340)/2000 = 5.9 tons/hr × 24 hrs/day = 143 tons/day

1 PL of 3/8 = 3240 lbs = 1.6 tons → 89 P.L. of 3/8 for 143 tons/day
72 ft³ → 6408 ft³ → 205,056 ft²

Forced dryer on 5 × 205,056 = 1,025,280 ft² which is about what they did.

Number logs being loaded into storage pile, △ ← This is a point on graph

Thes. 3/3 production went down 850,000,000 ft per chart on QA lab wall

This is a point on graph

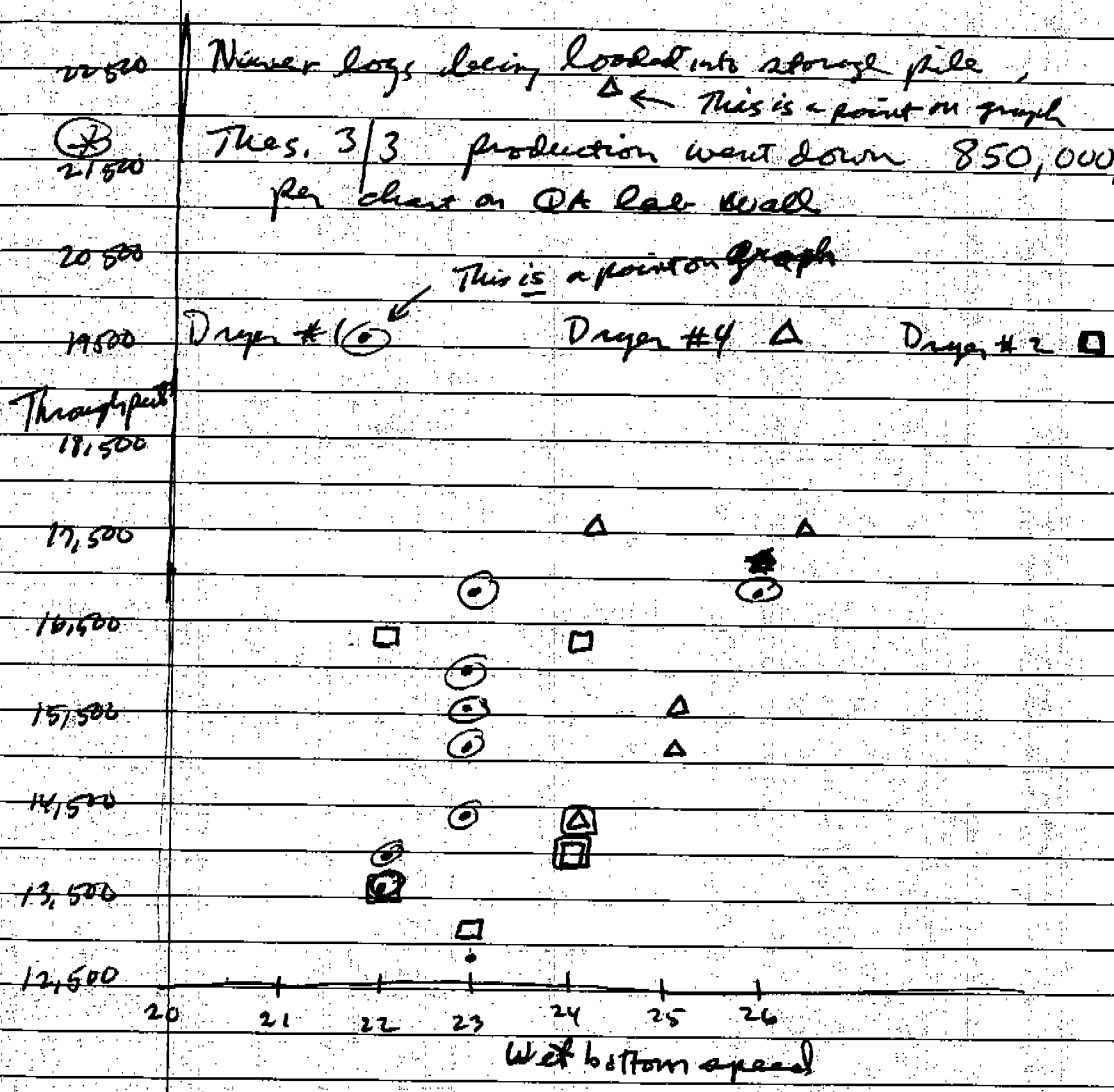

07 1089

[redacted]

3/

Calculate dryer Throughput using finished product (FP);

On 3/2/92 production (per press report):

Shift A (6AM - 6PM) 523,584 ft²

117 press loads of 23/32" all during our test days

$117 \text{ p.L.} \times \frac{5418 \text{ lbs.}}{\text{p.L. of } 23/32} = 633{,}906 \text{ lbs}$

÷ 2000 = ~~316.95~~ 317 tons FP

3 press loads of 3/8":

3 p.L. × 3240 lbs = 9,720 lbs

= 5 tons

35 d.t. min

35 min downtime total time ~11.5 hrs.

total tons FP during 12 hr. A shift =

317
+ 5
322 tons FP

Assume fines loss = 15% and trim loss = 7% total loss from dryer before press = 22%

$\text{dryer } \frac{\text{lbs}}{\text{hr}} = \frac{322 \text{ tons} \times \frac{2000 \text{ lbs}}{\text{ton}}}{11.5 \text{ hrs.}} \Big/ 1 - .22$

07 1090

= ~~68,803~~ 71,795 lbs/hr for 5 dryers → ~~13,761~~ 14359 lbs/hr per dryer

4726 ÷ 3
= 15,200

13,600
15,200
15,600
14,800
14,400
15,600
15,600
16,400
16,000
137,200
÷ 9
= 15,244
~ 15,250

19/32" =
.6495 ft

dryer

...ed product (FP):

...):

...ring our

633,906 lbs

...tons FP

...,720 lbs

...ist =

...nd Trim
...dryer
...efore

07 1090

14359 lbs
...761 hr
per dryer

47260 ÷ 3
= 15,200

13,600
15,200
15,600
14,800
14,400
15,600
15,600
16,400
16,000
137,200
÷ 9
= 15,244
~ 15,250

19/32" =
.6495

Using dump truck measurement on 3/2/92 we saw: ~~(must subtract 15% fines)~~

dryer #3 14,000 lbs/hr.
#4 17,600
#5 15,600
average 15,700 ~~- 1570 = 14130~~ ~~pretty close!~~

Try another day - on 2/28 we had 4 dryers measured by dumps:

dryer #2 13,600 lbs/hr.
#5 14,400 - 16,400 (5 dumps)
#4 15,200, 15,600 (2)
#3 14,800
average 15,250 lbs/hr ~~15250~~
~~13,725 lbs/hr.~~

On 2/28 production was:

1 p.l. 15/32 = 3870 lbs
13 pl. 7/16 = 13 × 3655 = 47,515 lbs
61 pl 19/32 = 61 × 4790 292,190
87 pl. 7/16 = 87 × 3655 = 317,985
661,560 lbs
in 12 hrs - 59 min
~ 11 hrs
= 60142 lbs/hr

$$\text{dryer } \frac{\text{lbs}}{\text{hr.}} = \frac{60142}{1 - .22} = 77,105 \frac{\text{lbs}}{\text{hr.}} \div 5 \text{ dryers}$$

= 15421 lbs/hr. pretty close!
when we look at ~~...~~ several dryers.

07 1091

Summary of Important Silsbee Findings

~~Possible Non-compliance issues:~~

(1) Opacity >20% (and calibration / zeroing) is needed / is off
and training of operators on what to do if >20%
procedures

(2) Inlet Temp > 820°F (and need calibration of strip chart and digital) (~~and~~ and need training / procedures of what to do if it exceeds 820°F). Need better strip charts if they are really supposed to read them for inlet temp.

(3) How will state enforce its dryer throughput limit?
(include fines, moisture correction? Will throughput be based on dryer dumps or on press production?)

(4) Process is "not like a chemical plant" per L-P's own statement. Since it's not, you probably can't control (limit) pollution through process controls — better to use actual control (~~incineration~~ VOC) to reduce pollution — (~~[illegible]~~) or at least to stack sample frequently (once every 3-6 months for key pollutants — probably CO, VOC, PM, formaldehyde). ~~Can BACT be of frequent sampling? would be cheaper than controls~~

(5) In order to really have good estimate on emissions from press, it would have to be enclosed (forming line, press, and unloader)

07 1092

Findings
needed
is off
/zeroing)
do if >20%
ation of
~~of~~ and need
to do if it
tter strip charts
inlet temp.
its dryer
sture
dumps
nical plant
you probably
ution
— better
~~[illegible]~~)
(~~[illegible]~~)
ently
key
OC, PM,
~~[illegible]~~
l estimate
, it
f (
nloader)
07 1092

We can compare Silsbee's emissions with an enclosed press first to see if we feel comfortable estimating fugitives that way.

(6) Draining or dumping multiclone clean out to ground may be a problem. Should sample effluent to see if it meets TCLP.

(7) T-O heater had been vented directly to atmosphere, not through NO.1 and NO.2 dryers and their multiclones, before our arrival — No control for particulates when this is done.

(8) Doesn't seem to be a lot of environmental control awareness at plant. Seems like J.I. Boswell does all the env. work and that people at plant are most concerned with production — This results in lack of response to out-of-compliance conditions (Opacity, high inlet temps) and out of calibration monitoring equipment (opacity, inlet T, strip charts -vs- digital)

~~(9) See if stack tests of 2/27 - 2/28 had lower VOC emissions than other test days. On these days they were primarily using older logs.~~

07 1093

(9) ~~(10)~~ Cyclone for dump of fuel fines (EP003) needs new bags or a new, larger cyclone as ~~is needed~~. Lots of PM emitted when fuel bins are high. Probably due to faulty cyclone. (Happened frequently)

[redacted]

(CP007, EPN 13)

(10) Stack from blending emits constant flow of moisture and particulate. May contain VOC and formaldehyde. Emissions as viewed from roof, looked significant. Should be sampled but will need sampling platform, safety lines, ports, etc.

(11) Compare ~~stack~~ tests on press vents with thickness of board being produced. Thinner boards seemed to have greater emissions.

~~(12) Look through notes for other possible reasons for any unusual stack test results — ask Rich Ida and Al Bandur also.~~

(13) (14) MEC intends to put larger ID fans on dryers and raise dryer outlet temp to reduce opacity in future. This may not require permit amendment, but should be evaluated.

(13) (15) Two heater may have to be replaced by larger one. Its shell temp gets high unless it's run on gas periodically each day. This ~~will~~ may probably require permit amendment.

(14) (9) (10) M
h
co
s
t
in
o
(c

(15)

• how to understand permit conditions that must be met and how they relate to your job

(16)

07 1094