AP42 Section:	10.5
Reference:	17
Title:	*Volatile Organic Compound Emissions From Wood Products Manufacturing Facilities, Part I - Plywood, Technical Bulletin No. 768*, National Council of the Paper Industry for Air and Stream Improvement, Inc., Research Triangle Park, NC, 1999. 2002 supplement

17

ncasi

NATIONAL COUNCIL FOR AIR AND STREAM IMPROVEMENT

VOLATILE ORGANIC COMPOUND EMISSIONS FROM WOOD PRODUCTS MANUFACTURING FACILITIES

Part I – Plywood

TECHNICAL BULLETIN NO. 768

JANUARY 1999

Acknowledgments

Many talented and dedicated people have participated in the Wood Products MACT Study. The AF&PA Wood Products Environmental Issues Task Group (WPEITG), chaired by Bill Nicholson, of Potlatch Corporation provided industry guidance for the study. John Pinkerton, NCASI Vice President, Air Quality, provided oversight for the project. Most of the project work was carried out at the NCASI Southern Regional Center where Ashok Jain is the Regional Manager. David Word, Program Manager and Rob Crawford, Project Leader, coordinated the project activities. Steve Jett, Steve Cloutier, Travis Epes, and MaryAnn Gunshefski were responsible for the planning and completion of the various parts of this project. The field test team included: Elizabeth Berkeley, Norm Czarniak, Van Dozier, Kenneth Jett, Neil Lofgren, Dennis Silvestri, Uday Singh, and Upasana Srivastava. Information management was directed by Travis Epes and Uday Singh. Laboratory support was provided by Ward Dickens, John McDaniel, and Jim Stainfield. This report was written by Rob Crawford, MaryAnn Gunshefski, Steve Cloutier, Travis Epes, and Steve Jett. Susan Kirkland and Tracy Stubbs were responsible for report preparation. Kari Smith was responsible for graphics design. Finally, the authors wish to thank the staff of the mills tested in this study, without whose help this report would not be possible.

For more information about this research, contact:

Robert J. Crawford
Project Leader
NCASI Southern Regional Center
P.O. Box 141020
Gainesville, Florida 32614-1020
(352) 377-4708

David H. Word
Program Manager
NCASI Southern Regional Center
P.O. Box 141020
Gainesville, Florida 32614-1020
(352) 377-4708

For information about NCASI publications, contact:

Publications Coordinator
NCASI
P.O. Box 13318
Research Triangle Park, NC 27709-3318
(919) 558-1999
publications@ncasi.org

National Council of the Paper Industry for Air and Stream Improvement, Inc. (NCASI). 1999. *Volatile Organic Compound Emissions from Wood Products Manufacturing Facilities, Part I - Plywood.* Technical Bulletin No. 768. Research Triangle Park, N.C.: National Council of the Paper Industry for Air and Stream Improvement, Inc.

© 1999 by the National Council of the Paper Industry for Air and Stream Improvement, Inc.

ncasi

serving the environmental research needs of the forest products industry since 1943

PRESIDENT'S NOTE

In April of 1997, the National Council of the Paper Industry for Air and Stream Improvement, Inc. (NCASI) began the field work for what is being called the "Wood Products MACT Study" to characterize 'hazardous air pollutant' (HAP) and total volatile organic carbon (VOC) emissions from wood products manufacturing facilities. This study was undertaken at the request of American Forest and Paper Association (AF&PA), whose members provided the funding for the sampling program. The main purpose of this sampling effort was to provide emissions data that could be used by the industry and EPA in the development of Maximum Achievable Control Technology (MACT) standards, which are required by the 1990 Clean Air Act Amendments. Since EPA planned only a minimal information collection effort to support development of these standards for panel plants and engineered lumber mills, and considering the general lack of high-quality emissions data for most of the 'hazardous air pollutants,' the industry's leadership determined it would be worthwhile to conduct a major sampling effort to gather the needed information. It is anticipated that EPA will rely heavily on the data collected during this sampling program in the rulemaking process.

The study included 29 mills. The tested mills included: four oriented strandboard (OSB) mills, four particleboard mills, two hardwood veneer mills, one fiberboard mill, six softwood plywood mills, three hardwood plywood mills, four medium-density fiberboard (MDF) mills, three hardboard mills, and two engineered wood products mills. At most of these facilities, HAP and VOC emissions from the dryers and presses were measured. Where possible, HAP and VOC removal efficiencies from VOC control devices were tested. The effect of particulate control devices on HAP and VOC emissions were also examined. At some of the mills, miscellaneous sources, such as board coolers, loaders, formers, saws, sanders, hoggers, refiners/hammermills, digesters, tempering ovens, log steaming vats, and pulp storage tanks were also tested for HAP and VOC emissions

This technical bulletin is the first in a series of seven technical bulletins that summarize the results of the Wood Products MACT Study. It addresses selected volatile organic compound, total volatile organic compound, and volatile organic HAP emissions from nine plywood mills and two hardwood veneer mills. The process units tested at these mills included: softwood and hardwood veneer dryers and coolers, emission control devices associated with softwood veneer dryer heated zones, softwood and hardwood plywood hot presses, and a number of miscellaneous plywood mill sources.

Results showed the predominant HAP emitted at plywood mills is methanol, which was found in nearly every source tested. Formaldehyde and acetaldehyde were detected in many of the sources. As anticipated, veneer dryers and hot presses were the largest sources of HAP emissions, although the data showed significant differences among major wood species. VOC emissions were also species dependent. Two wet ESPs and an electrified filter bed installed on softwood veneer dryers for particulate control had widely ranging removal efficiencies for individual HAPs and total VOCs. Two regenerative thermal oxidizers and one regenerative catalytic oxidizer installed on Southern pine veneer dryers had high removal efficiencies for total VOCs with somewhat lower efficiencies for individual HAPs.

Ronald A. Yeske

January 1999

VOLATILE ORGANIC COMPOUND EMISSIONS FROM WOOD PRODUCTS MANUFACTURING FACILITIES

Part I - Plywood

TECHNICAL BULLETIN NO. 768

January 1999

ABSTRACT

An impinger/canister method developed by NCASI and EPA Method 25A were used to measure volatile organic HAP and VOC emissions from eleven mills producing veneer and/or plywood. Veneer dryers and plywood presses (if present) were tested at all mills. At some mills other emission sources were sampled including veneer coolers, radio frequency veneer redryers, chippers, saws, sanders and a log steaming vat. The mills were located in the Northwest, Southeast and Midwest, and used various softwood and hardwood species. At all mills, the dominant HAP was methanol, followed by acetaldehyde and formaldehyde. The largest emission sources of HAPs and total VOCs were the heated sections of veneer dryers and the hot presses. Emission rates clearly depended on wood species. Other factors appearing to affect the emission rates were veneer age, dryer heat source (steam or direct-firing), and extent of fugitive emissions exhausted through press vents. Resin formulation may have influenced the press emission rates of methanol and total VOCs, but sufficient data on resins were not obtained to draw conclusions. At three mills using Southern pine, the veneer dryer exhausts were routed to an RTO or RCO. Simultaneous inlet/outlet measurements showed these devices reduced total VOC emissions by 90%, but average reductions in individual compounds were sometimes lower, perhaps due to relatively low inlet concentrations. Similar measurements across particulate control devices (three wet ESPs and one EFB) installed on western softwood veneer dryers indicated there was essentially no VOC removal and widely varying removal efficiencies (from negative to 80%) for individual organic compounds.

KEYWORDS

Plywood, wood products, engineered wood, laminated veneer lumber, veneer dryer, veneer cooler, electrostatic precipitator, electrified filter bed, thermal oxidizer, catalytic oxidizer, hot press, sander, saw, chipper, baghouse, log vat, log steaming, volatile organic carbon, hazardous air pollutant, methanol, formaldehyde, acetaldehyde, benzene, toluene, styrene, xylene, terpene, pinene, LVL, WESP, EFB, RTO, RCO, HAP, VOC, THC, MACT

RELATED NCASI PUBLICATIONS

Technical Bulletin No. 769 (January 1999). *Volatile Organic Compound Emissions from Wood Products Manufacturing Facilities, Part II - Engineered Wood Products.*

Technical Bulletin No. 770 (January 1999). *Volatile Organic Compound Emissions from Wood Products Manufacturing Facilities, Part III - Medium Density Fiberboard.*

Technical Bulletin No. 771 (January 1999). *Volatile Organic Compound Emissions from Wood Products Manufacturing Facilities, Part IV - Particleboard.*

Technical Bulletin No. 772 (January 1999). *Volatile Organic Compound Emissions from Wood Products Manufacturing Facilities, Part V - Oriented Strandboard.*

National Council for Air and Stream Improvement

Technical Bulletin No. 773 (January 1999). *Volatile Organic Compound Emissions from Wood Products Manufacturing Facilities, Part VI - Hardboard/Fiberboard.*

Technical Bulletin No. 774 (January 1999). *Volatile Organic Compound Emissions from Wood Products Manufacturing Facilities, Part VII - Test Methods, Quality Assurance, Quality Control Procedures and Data Analysis Protocol.*

CONTENTS

1.0 INTRODUCTION 1

2.0 TEST METHODS AND CALCULATION PROCEDURES 4

- 2.1 Sampling Protocol 4
- 2.2 Test Methods 5
- 2.3 Data Analysis Protocol 13
- 2.4 Data Reporting Protocol 13
- 2.5 Calculation of Emission Rates 15
- 2.6 Comparison of Total HAP and VOC Emissions 16
- 2.7 Abbreviations and Acronyms 17

3.0 SOURCE SELECTION AND FIELD STUDY PROTOCOL 18

4.0 PROCESS DESCRIPTIONS AND TEST PROGRAMS 22

- 4.1 Process Description and Test Program, Mill 065 22
- 4.2 Process Description and Test Program, Mill 112 26
- 4.3 Process Description and Test Program, Mill 115 43
- 4.4 Process Description and Test Program, Mill 155 55
- 4.5 Process Description and Test Program, Mill 165 65
- 4.6 Process Description and Test Program, Mill 170 79
- 4.7 Process Description and Test Program, Mill 188 93
- 4.8 Process Description and Test Program, Mill 194 100
- 4.9 Process Description and Test Program, Mill 400 111
- 4.10 Process Description and Test Program, Mill 401 117
- 4.11 Process Description and Test Program, Mill 405 123

5.0 TEST RESULTS 133

- 5.1 Results of Tests at Mill 065 133
- 5.2 Results of Tests at Mill 112 135
- 5.3 Results of Tests at Mill 115 143
- 5.4 Results of Tests at Mill 155 148
- 5.5 Results of Tests at Mill 165 152
- 5.6 Results of Tests at Mill 170 158

5.7 Results of Tests at Mill 188 165
5.8 Results of Tests at Mill 194 167
5.9 Results of Tests at Mill 400 174
5.10 Results of Tests at Mill 401 178
5.11 Results of Tests at Mill 405 183
6.0 DISCUSSION OF TEST RESULTS 188
6.1 Veneer Dryer Emissions 188
6.2 Plywood Press Emissions 210
6.3 Discussion of Miscellaneous Source Emissions Test Results 218
6.4 Impact of Control Devices on HAP and VOC Removal 224
7.0 SUMMARY 231
8.0 INFORMATION NEEDS 234
REFERENCES 235
APPENDICES
A Data Calculation Procedures A1
B Detailed Emission Test Results B1
C Detailed Process Liquid Samples Analysis Results C1

TABLES

Table 1.1 Wood Products MACT Sampling - Mills and Sources 3

Table 2.1 Target HAP Analytes with Target Detection Limits and Analysis Techniques 9

Table 2.2 Target Non-HAP Analytes with Analysis Techniques Indicated 9

Table 2.3 Analyte List for the Solvent Extraction, GC/MS Process Liquid Analysis Method for Glycol Ethers 11

Table 2.4 Modified EPA Method 8260 Analyte List 12

Table 2.5 Modified EPA Method 8270B Analyte List 13

Table 2.6 Units of Emission Calculations 14

Table 2.7 List of Abbreviations and Acronyms 17

Table 3.1 Parameters Considered in Wood Products Mill Selection 19

Table 3.2 Summary of Wood Products Mills and Process Units Selected for Sampling 20

Table 3.3 Plywood and Hardwood Veneer Mills Selected for Testing 21

Table 4.1.1 Emission Test Program, Mill 065 23

Table 4.1.2 Process Operating Conditions During Testing of the Hardwood Plywood Presses, Mill 065 25

Table 4.2.1 Emission Test Program, Mill 112 28

Table 4.2.2 Process Liquid Test Program, Mill 112 30

Table 4.2.3 Process Operating Conditions During Testing of the Electrostatic Precipitator, Mill 112 34

Table 4.2.4 Process Operating Conditions During Testing of the Softwood Veneer Dryers, Mill 112 35

Table 4.2.5 Process Operating Conditions During Testing of the Softwood Hot Presses, Mill 112 38

Table 4.2.6 Process Operating Conditions During Testing of the Softwood Radio Frequency Dryer, Mill 112 40

Table 4.2.7 Process Operating Conditions During Testing of the Softwood Log Steaming Vat, Mill 112 42

Table 4.3.1 Emission Test Program, Mill 115 45

Table 4.3.2 Process Liquid Test Program, Mill 115 46

Table 4.3.3 Process Operating Conditions During Testing of the Electrostatic Precipitator, Mill 115 50

Table 4.3.4 Process Operating Conditions During Testing of Softwood Veneer Dryers, Mill 115 51

Table 4.3.5 Process Operating Conditions During Testing of Softwood Hot Presses, Mill 115 54

Table 4.4.1 Emission Test Program, Mill 155 57

Table 4.4.2 Process Operating Conditions During Testing of the Softwood Veneer Dryers, Mill 155 61

Table 4.4.3 Process Operating Conditions During Testing of the Electrified Filter Bed, Mill 155 62

Table 4.4.4 Process Operating Conditions During Testing of the Softwood Hot Press, Mill 155 64

Table 4.5.1 Emission Test Program, Mill 165 67

Table 4.5.2 Process Operating Conditions During Testing of the Softwood Veneer Dryers, Mill 165 71

Table 4.5.3 Process Operating Conditions of the Regenerative Thermal Oxidizer, Mill 165 72

Table 4.5.4 Process Operating Conditions During Testing of the Softwood Hot Presses, Mill 165 74

Table 4.5.5 Process Operating Conditions During Testing of the Softwood Radio Frequency Dryer, Mill 165 75

Table 4.5.6 Process Operating Conditions During Testing of the Dry Trim Chippers, Mill 165 78

Table 4.6.1 Emission Test Program, Mill 170 81

Table 4.6.2 Process Operating Conditions During Testing of Softwood Veneer Dryers, Mill 170 85

Table 4.6.3 Process Operating Conditions for the Regenerative Thermal Oxidizer, Mill 170 86

Table 4.6.4 Process Operating Conditions During Testing of the Softwood Hot Presses, Mill 170 88

Table 4.6.5 Process Operating Conditions During Testing of the Skinner Saw Cyclone, Mill 170 92

Table 4.6.6 Process Operating Conditions During Testing of the Sander Baghouse (1SD1), Mill 170 92

Table 4.7.1 Emission Test Program, Mill 198 95

Table 4.7.2 Process Operating Conditions During Testing of the Electrostatic Precipitator, Mill 188 98

Table 4.7.3 Process Operating Conditions During Testing of the Softwood Veneer Dryers, Mill 188 99

Table 4.8.1 Emission Test Program, Mill 194 102

Table 4.8.2 Process Operating Conditions During Testing of the Softwood Veneer Dryers, Mill 194 106

Table 4.8.3 Process Operating Conditions of the Regenerative Catalytic Oxidizer, Mill 194 107

Table 4.8.4 Process Operating Conditions During Testing of the Softwood Hot Presses, Mill 194 109

Table 4.9.1 Emission Test Program, Mill 400 113

Table 4.9.2 Process Operating Conditions During Testing of Hardwood Veneer Dryers, Mill 400 116

Table 4.10.1 Emission Test Program, Mill 401 119

Table 4.10.2 Process Operating Conditions During Testing of Hardwood Veneer Dryers, Mill 401 122

Table 4.11.1 Emission Test Program, Mill 405 125

Table 4.11.2 Process Operating Conditions During Testing of Hardwood Veneer Dryers, Mill 405 128

Table 4.11.3 Process Operating Conditions During Testing of the Hardwood Hot Presses, Mill 405 130

Table 4.11.4 Process Operating Conditions During Testing of the Combined Dust Baghouse (1S11), Mill 405 132

Table 5.1.1 Press Emissions, Mill 065 134

Table 5.2.1 No. 2 Dryer Emissions, Douglas Fir Furnish, Mill 112 136

Table 5.2.2 No. 2 Dryer Emissions, Ponderosa Pine Furnish, Mill 112 137

Table 5.2.3 WESP Emissions, Mill 112 138

Table 5.2.4 Radio Frequency Re-Dryer Emissions, Mill 112 139

Table 5.2.5 Press Emissions, Mill 112 140

Table 5.2.6 Miscellaneous Source Emissions, Mill 112 141

Table 5.2.7 Summary of GC/FID Process Liquid Sample Analysis Results, Mill 112 142

Table 5.3.1 Combined Dryer Emissions, Mill 115 144

Table 5.3.2 WESP Emissions, Mill 115 145

Table 5.3.3 Press Emissions, Mill 115 146

Table 5.3.4 Softwood Veneer Dryer WESP Quench Water (XDV1L), Mill 115 147

Table 5.4.1 Combined Dryer Emissions, Mill 155 149

Table 5.4.2 EFB Emissions, Mill 155 150

Table 5.4.3 Press Emissions, Mill 155 151
Table 5.5.1 Combined Dryer Exhaust, Mill 165 153
Table 5.5.2 RTO Emissions, Mill 165 154
Table 5.5.3 Combined Press Emissions, Mill 165 155
Table 5.5.4 Miscellaneous Source Emissions, Mill 165 156
Table 5.5.5 Alkane and Carbon Monoxide Emission Test Results, Mill 165 157
Table 5.6.1 No. 2 Veneer Dryer Emissions, Mill 170 159
Table 5.6.2 No. 3 Veneer Dryer Emissions, Mill 170 160
Table 5.6.3 RTO Emissions, Mill 170 161
Table 5.6.4 No. 3 Press Emissions, Mill 170 162
Table 5.6.5 Miscellaneous Source Emissions, Mill 170 163
Table 5.6.6 Alkane and Carbon Monoxide Emission Test Results, Mill 170 164
Table 5.7.1 Veneer Dryer WESP Emissions, Mill 188 166
Table 5.8.1 No. 1 Dryer Emissions, Mill 194 168
Table 5.8.2 No. 2 Dryer Emissions, Mill 194 169
Table 5.8.3 RCO Emissions, Mill 194 170
Table 5.8.4 No. 1 and No. 2 Press Emissions, Mill 194 171
Table 5.8.5 Alkane Analysis Emission Test Results, Mill 194 172
Table 5.8.6 Carbon Monoxide Emission Test Results, Mill 194 173
Table 5.9.1 No. 3 Dryer Emissions (White Oak Furnish), Mill 400 175
Table 5.9.2 No. 3 Dryer Emissions (Cherry Furnish), Mill 400 176
Table 5.9.3 No. 4 Dryer Emissions (Red Oak Furnish), Mill 400 177
Table 5.10.1 No. 1 Dryer Emissions (Red Oak Furnish), Mill 401 179
Table 5.10.2 No. 1 Dryer Emissions (White Oak Furnish), Mill 401 180
Table 5.10.3 No. 2 Dryer Emissions (Maple Furnish), Mill 401 181
Table 5.10.4 No. 2 Dryer Emissions (Oak Furnish), Mill 401 182
Table 5.11.1 Dryer Emissions, Mill 405 184
Table 5.11.2 Press Emissions, Mill 405 185
Table 5.11.3 Miscellaneous Source Emissions, Mill 405 186
Table 5.11.4 Carbon Monoxide Emission Test Results, Mill 405 187

Table 6.1.1 Summary of Western Softwood Veneer Dryer Heated Zone Emissions 189

Table 6.1.2 Summary of Southern Softwood Veneer Dryer Heated Zone Emissions 190

Table 6.1.3 Summary of Hardwood Veneer Dryer Heated Section Emissions 191

Table 6.1.4 Summary of Softwood Veneer Cooling Section Emissions 192

Table 6.1.5 Summary of Hardwood Veneer Cooling Section Emissions 193

Table 6.1.6 Summary of Radio Frequency Re-Dryer Emissions 194

Table 6.2.1 Summary of Western Softwood Plywood Press Emissions 211

Table 6.2.2 Summary of Southern Softwood Plywood Press Emissions 212

Table 6.2.3 Summary of Hardwood Plywood Press Emissions 213

Table 6.3.1 Miscellaneous Source Emissions at Plywood Mills 219

Table 6.3.2 Comparison of Log Vat Emissions to Dryer and Press Emissions, Mill 112 220

Table 6.3.3 Comparison of Chipper Vent Emissions to Dryer and Press Emissions, Mill 165 221

Table 6.3.4 Comparison of Sander and Skinner Saw Emissions to Dryer and Press Emissions, Mill 170 222

Table 6.3.5 Comparison of Combined Dust Baghouse Emissions to Dryer and Press Emissions, Mill 405 223

Table 6.4.1 Summary of WESP Emissions Control Efficiencies at Plywood Mills 225

Table 6.4.2 Summary of Electrified Filter Bed Emission Control Efficiencies at Plywood Mills 227

Table 6.4.3 Summary of Regenerative Thermal Oxidizers Emission Control Efficiencies at Plywood Mills 228

Table 6.4.4 Summary of Regenerative Catalytic Oxidizers Emission Control Efficiencies at Plywood Mills 230

Table 7.1.1 Summary of Plywood Results - Average Values 232

FIGURES

Figure 2.1 Combined Impinger and Canister Sampling Train 6

Figure 2.2 Method 25A Sampling Train 7

Figure 4.1.1 Hardwood Plywood Presses, Mill 065 24

Figure 4.2.1 Overall Process Flow Diagram, Mill 112 27

Figure 4.2.2 No. 2 Softwood Veneer Dryer, Mill 112 32

Figure 4.2.3 Wet Electrostatic Precipitator, Mill 112 33

Figure 4.2.4 Hot Board Presses, Mill 112 36
Figure 4.2.5 Radio Frequency Dryer, Mill 112 39
Figure 4.2.6 Log Steaming Vats, Mill 112 41
Figure 4.3.1 Overall Process Flow Diagram, Mill 115 44
Figure 4.3.2 Softwood Veneer Dryers, Mill 115 48
Figure 4.3.3 Wet Electrostatic Precipitator, Mill 115 49
Figure 4.3.4 Hot Board Presses, Mill 115 52
Figure 4.4.1 Overall Process Flow Diagram, Mill 155 56
Figure 4.4.2 Softwood Veneer Dryers, Mill 155 58
Figure 4.4.3 Electrified Filter Bed (EFB), Mill 155 60
Figure 4.4.4 Hot Press No. 1, Mill 155 63
Figure 4.5.1 Overall Process Flow Diagram, Mill 165 66
Figure 4.5.2 Softwood Veneer Dryers, Mill 165 68
Figure 4.5.3 Regenerative Thermal Oxidizer, Mill 165 70
Figure 4.5.4 Hot Board Presses, Mill 165 73
Figure 4.5.5 Radio Frequency Dryer, Mill 165 76
Figure 4.5.6 Trim and Sanderdust Handling, Mill 165 77
Figure 4.6.1 Overall Process Flow Diagram, Mill 170 80
Figure 4.6.2 Softwood Veneer Dryers, Mill 170 82
Figure 4.6.3 Regenerative Thermal Oxidizer, Mill 170 84
Figure 4.6.4 Hot Board Press, Mill 170 87
Figure 4.6.5 Temporary Press Enclosure, Mill 170 90
Figure 4.6.6 Wood Residue Handling, Mill 170 91
Figure 4.7.1 Overall Process Flow Diagram, Mill 188 94
Figure 4.7.2 Softwood Veneer Dryers, Mill 188 96
Figure 4.8.1 Overall Process Flow Diagram, Mill 194 101
Figure 4.8.2 Veneer Dryers, Mill 194 103
Figure 4.8.3 Regenerative Catalytic Oxidizer Process Flow, Mill 194 105
Figure 4.8.4 Hot Presses, Mill 194 108
Figure 4.9.1 Overall Process Flow Diagram, Mill 400 112

Figure 4.9.2 Hardwood Veneer Dryer, Mill 400 115

Figure 4.10.1 Overall Process Flow Diagram, Mill 401 118

Figure 4.10.2 Hardwood Veneer Dryer, Mill 401 120

Figure 4.11.1 Overall Process Flow Diagram, Mill 405 124

Figure 4.11.2 Hardwood Veneer Dryer, Mill 405 126

Figure 4.11.3 Hardwood Plywood Hot Presses, Mill 405 129

Figure 4.11.4 Wood Residue Collection System, Mill 405 131

Figure 6.1.1 Acetaldehyde, Formaldehyde and Methanol Emissions from Western Softwood Veneer Dryer Heated Sections 195

Figure 6.1.2 Acetaldehyde, Formaldehyde and Methanol Emissions from Steam Heated Southern Softwood Veneer Dryer Heated Sections 196

Figure 6.1.3 HAP Emissions from Hardwood Veneer Dryer Heated Sections 197

Figure 6.1.4 Comparison of Average HAP Emissions Between Heated Sections of Steam Heated Western and Southern Softwood Veneer Dryers 198

Figure 6.1.5 HAP Emissions, All Veneer Dryer Heated Zones 199

Figure 6.1.6 Effect of Douglas Fir Veneer Age on HAP Emissions from Veneer Dryer Heated Zones 200

Figure 6.1.7 Steam Heated vs. Gas Fired Southern Pine Veneer Dryers Emissions 201

Figure 6.1.8 VOC Emissions from Softwood Veneer Dryer Heated Sources 203

Figure 6.1.9 Softwood Veneer Cooling Section HAP Emissions 204

Figure 6.1.10 Hardwood Veneer Cooling Section HAP Emissions 205

Figure 6.1.11 Average HAP Emissions from Heated and Cooling Sections of Veneer Dryers 206

Figure 6.1.12 Average THC Emissions from Heated and Cooling Sections of Veneer Dryers 208

Figure 6.1.13 Comparison of Individual Hardwood Veneer Dryer Total THC Emissions 209

Figure 6.2.1 Press Acetaldehyde, Formaldehyde, Methanol and Total HAP Emissions 214

Figure 6.2.2 Press Terpene and THC Emissions 215

Figure 6.2.3 Press HAP Emissions per lb. of Resin Applied 216

VOLATILE ORGANIC COMPOUND EMISSIONS FROM WOOD PRODUCTS MANUFACTURING FACILITIES

PART I - PLYWOOD

1.0 INTRODUCTION

The 1990 Clean Air Act Amendments require EPA to develop regulations which will reduce the emissions of 'hazardous air pollutants' (HAPs) from industrial sources. Manufacturing of plywood, particleboard, and other types of wood panels and composite wood products was listed as one of 170 industrial source types for which emission standards would be developed. The regulations are to be based on "Maximum Achievable Control Technology" (MACT).

Congress imposed deadlines on EPA for issuing MACT standards, requiring regulations for all source categories be issued by November 2000 with at least 50% of these issued by November 1997. EPA placed the manufacture of wood panels and other wood composite products (hereafter referred to as "wood products") in the group of source categories for which MACT standards would be issued by the year 2000. The MACT standards are intended to achieve the maximum emission reductions possible in HAPs, considering existing practices, cost benefits of additional reductions, energy requirements, and non-air quality impacts. These standards can be based on process enclosures, process changes, modified operating practices, material substitution, add-on control technologies, or any combination of these options.

In late 1995, EPA began work on developing MACT emission standards for certain types of wood products plants, including panel plants and engineered lumber mills. Due to budget limitations and time constraints, EPA was planning a very minimal information collection effort to support its rulemaking activity and had no plans to do any emission sampling. Instead, EPA planned to rely on existing information and readily accessible measurement data. While EPA would have liked to have had comprehensive data on emissions of 'hazardous air pollutants' and the effectiveness of any control measures currently employed in the industry, EPA's management felt that rulemaking could proceed without such information. However, EPA staff indicated that they would be receptive to an industry effort to provide this information so that a more informed rulemaking could take place.

The development of MACT emission standards for a source category requires information on (a) population of plants and process equipment in the source category, (b) emissions of 'hazardous air pollutants' from the various pieces of process equipment, (c) performance of any add-on control technologies which might reduce the amount of 'hazardous air pollutants' emitted, (d) other techniques such as material substitution, modification of operating or work practices, or process enclosures, which might reduce emissions of 'hazardous air pollutants,' and (e) technical feasibility and costs for installation and operation of add-on control equipment, process modifications, and material substitution. Gathering this information involves a considerable effort.

In response to this emerging situation, the industry made an initial attempt to identify sources of information on emissions of 'hazardous air pollutants' from panel plants and engineered lumber mills. Some testing had been done in the early 1990s by EPA contractors to characterize organic compound emissions from wood drying and pressing sources. NCASI did a limited amount of heated canister sampling at two panel plants in 1994, but this work was primarily intended to examine the applicability of the sampling method for obtaining speciated organic compound emissions from wood drying and pressing sources. In compiling a wood products emission data base

in 1994 and early 1995, NCASI obtained many sampling reports for company-conducted emission tests. A few of these involved testing for a limited number of 'hazardous air pollutants' other than formaldehyde and MDI. As part of an early 1995 industry-wide survey, wood products plants were asked if they had conducted any emission testing for 'hazardous air pollutants' as of the end of 1994 that had not been previously made available to NCASI. The survey responses suggested relatively little additional test data existed for compounds other than formaldehyde.

A preliminary analysis indicated the emission test data available to NCASI were very limited in terms of the number of sources and source types tested, with the possible exceptions of dryers at particleboard and OSB plants. Since there are no approved EPA test methods for any of the 'hazardous air pollutants' for wood drying and pressing sources, and a wide variety of test methods were used by many different sampling crews, the accuracy and validity of the reported results could not be reliably established.

Thus, the industry concluded that available emissions data were inadequate for determining appropriate MACT emission standards for panel plants and engineered lumber facilities. This conclusion prompted the industry to consider undertaking a sampling program to obtain critically needed data for the MACT rulemaking activity.

The industry's umbrella trade association, the American Forest & Paper Association (AF&PA), took the lead role in responding to this EPA rulemaking activity. Over the past several years, AF&PA's Wood Products Environmental Issues Task Group, comprised of AF&PA member company representatives and representatives of the major panel trade associations (CPA, APA-Engineered Wood Association, AHA, HPVA), has been considering what actions should be taken to ensure that EPA develops reasonable, cost-effective, and technically sound emission regulations for panel plants and engineered lumber mills.

In 1996, the Task Group recommended that an industry-supported HAP sampling program be conducted. The sampling, sponsored by AF&PA, was designed to measure key 'hazardous air pollutants' and VOCs at a wide variety of panel plants and engineered lumber mills.

Sampling was conducted at 27 panel plants and two engineered lumber mills. The types of mills sampled and the number of mills in each category are shown in Table 1.1. Wood drying and pressing sources were the main focus of the study. "Minor" source types such as board coolers, refiners, resin mix tanks, etc. were sampled at many of the plants. Where possible, samples were collected both upstream and downstream of pollution control devices so that destruction or removal efficiencies could be determined.

Table 1.1. Wood Products MACT Sampling - Mills and Sources		
Plant Type	No. of Plants For Sampling	Sources of Critical Importance
Hardwood Veneer	2	Veneer dryers
Hardwood Plywood	3	Veneer dryers Hot presses
Softwood Plywood	6	Direct and steam-heated veneer dryers Veneer dryers with VOC/PM controls Hot presses
Engineered Lumber	2	Batch presses Continuous presses
Particleboard	4	Dryers using green and dried furnish Direct and indirect heated dryers Presses for different board thickness Dryers and presses with VOC/PM controls Board coolers
Medium Density Fiberboard	4	Tube dryers w/ and w/o blow line blending Dryers with VOC/PM controls Presses with VOC controls Board coolers
Oriented Strandboard	4	Dryers with VOC controls (HW and SW furnish) Presses with VOC controls
Hardboard and Fiberboard	4	Fiber washers, Drying kilns Tempering ovens Presses (w/ and w/o resin use) Tube Dryers

2.0 TEST METHODS AND CALCULATION PROCEDURES

2.1 Sampling Protocol

2.1.1 *Source Gas Sampling*

This study required methods which could measure wide ranges of concentrations (parts per billion to parts per million (v/v)) of non-polar volatile organic compounds, polar volatile organic compounds, semi-volatile organic compounds, formaldehyde and total VOCs in vent gases, some of which contain high levels of moisture. Additionally, the methods had to be portable, relatively easy to use, and allow for off-site analysis (except for total VOCs) to eliminate the need for taking analytical instruments into the field. To meet these objectives an impinger/canister method, described later in this section, was used for all of the speciated emissions testing in this study. In addition to this, a method similar to EPA Method 25A was used for total VOC emissions testing.

During the study, vent gas samples were collected in impingers and canisters. The collected samples were shipped to the NCASI Southern Regional Center (SRC) laboratory where they were analyzed, generally, within three weeks of the conclusion of field testing. For some mills, after initial analysis at the NCASI laboratory, several canisters were shipped to another laboratory to be analyzed for alkanes (e.g., methane, ethane, etc.). In addition to analyzing for the standard compound list, the total ion current chromatograms from the NCASI SRC standard analyte set analysis were inspected to determine if there were any unknown peaks. If significant unknown peaks were observed, then the identities of those compounds were investigated.

During source testing, three samples were generally collected from each source. Each sampling period generally lasted 60 minutes with an approximately 2 hour period between each sample collection. Instead of applying the EPA Method 301 protocol to the impinger/canister method, a self validation procedure was added to the method. The self validation procedure involved simultaneous testing with two trains, one spiked and one unspiked. The water soluble spike compounds were added to the first impinger at the beginning of the run. The non-water soluble spike compounds were added to the canister before the canister was shipped to the field. This was done on one of the runs on every source. A duplicate train was run during one of the runs on approximately every third source. One train blank and one train spike (in that order) were conducted on each train after the sampling was completed for each trip. For the train spike, the spike compounds were added at the probe tip.

2.1.2 *Process Liquid Stream Sampling*

At some of the mills, process liquid samples were also collected. The process stream collection locations were selected to provide information on process stream concentrations of HAP compounds, where the amounts of HAP compounds in the process streams were expected to affect the air emissions from tested sources. In these cases, liquid samples were collected from one or more locations concurrent with each emission test at each source. Thus, in most of these cases, three process liquid sample collections were performed in conjunction with emissions testing at the affected source. At some locations, samples of water associated with wet emissions control devices were collected in conjunction with emission tests to determine if the water used in these control devices was capturing any HAP compounds.

All of the process liquid samples collected in this study were grab samples. All of the samples were analyzed for their methanol, acetaldehyde, methyl ethyl ketone, acetone, acrolein, methyl isobutyl ketone, phenol, and propionaldehyde content by direct injection GC/FID at the NCASI SRC laboratory. One of the samples from each location was collected in duplicate. Some of the samples

were also analyzed for formaldehyde via a derivitization/spectrophotometric method at the NCASI SRC laboratory. Some of the process liquid samples collected at wet control devices (e.g., wet electrostatic precipitators (wet ESPs) and scrubbers), were analyzed for a wide range of compounds, including volatiles, semi-volatiles, and glycol ethers, at the NCASI West Coast Regional Center Laboratory (WCRC).

2.2 Test Methods

To accomplish the objectives of this study, a number of different test methods were employed. The emission test methods included the United States Environmental Protection Agency (EPA) reference methods, where appropriate, and NCASI methods which included a self-validating quality assurance program. This section presents a brief description of the methods and target analytes for this study. The details of the methods used and the quality assurance procedures employed are included in NCASI Technical Bulletin No. 774 (NCASI 1999).

2.2.1 *Emission Sampling Methods*

A combination aqueous-impinger/canister sampling train was used for collecting samples for analysis of HAPs, terpenes, carbon monoxide and nitrogen oxides. Total VOC emissions were measured by using a sampling train similar to that specified in EPA Method 25A. Volumetric flow rate measurements were made by EPA Methods 1, 2, and 3 in combination with a wet bulb/dry bulb moisture determination.

2.2.1.1 *NCASI Impinger/Canister (NICM) Source Sampling Train*

The test method utilized for this study involves sample collection in aqueous impingers followed by a SUMMA™ polished stainless steel canister. The most water soluble compounds are captured in the impingers, the moderately water soluble compounds are split between the impingers and canister, and the non-water soluble compounds are captured in the canister. Figure 2.1 is a schematic diagram of the sampling train. The sampling train consists of a heated probe and filter box maintained at 250°F followed by a set of three midget impingers in series, each of which contains 25 mL of chilled water at the start of the sample run. The first impinger has a frit on the end of the stem to improve gas/liquid contact. The impingers are followed by a flow meter, a critical orifice used to maintain the sample flow rate, and a Teflon head pump, which draws the stack gas through the system. A portion of the exit gas from the pump is routed to the evacuated SUMMA™ canister. During source sampling the flow to the canister is maintained at 100 mL/min by manually adjusting a needle valve as the canister pressure increases over the one hour sampling period. A variable area flow meter is used to monitor the sample flow rate to the canister.

2.2.1.2 *Method 25A Total VOC Sampling Train*

The emissions of total hydrocarbons or VOCs were measured using a total hydrocarbon analyzer (THA) equipped with a flame ionization detector (FID). The VOC train is depicted in Figure 2.2. In this train, samples are withdrawn continuously and conveyed to the analyzer through a heated probe and filter box followed by a heated sample line, heated head pump and manifold. The sample gas can also be diluted to control the moisture content of the sample stream. The total hydrocarbon results are reported as carbon equivalents.

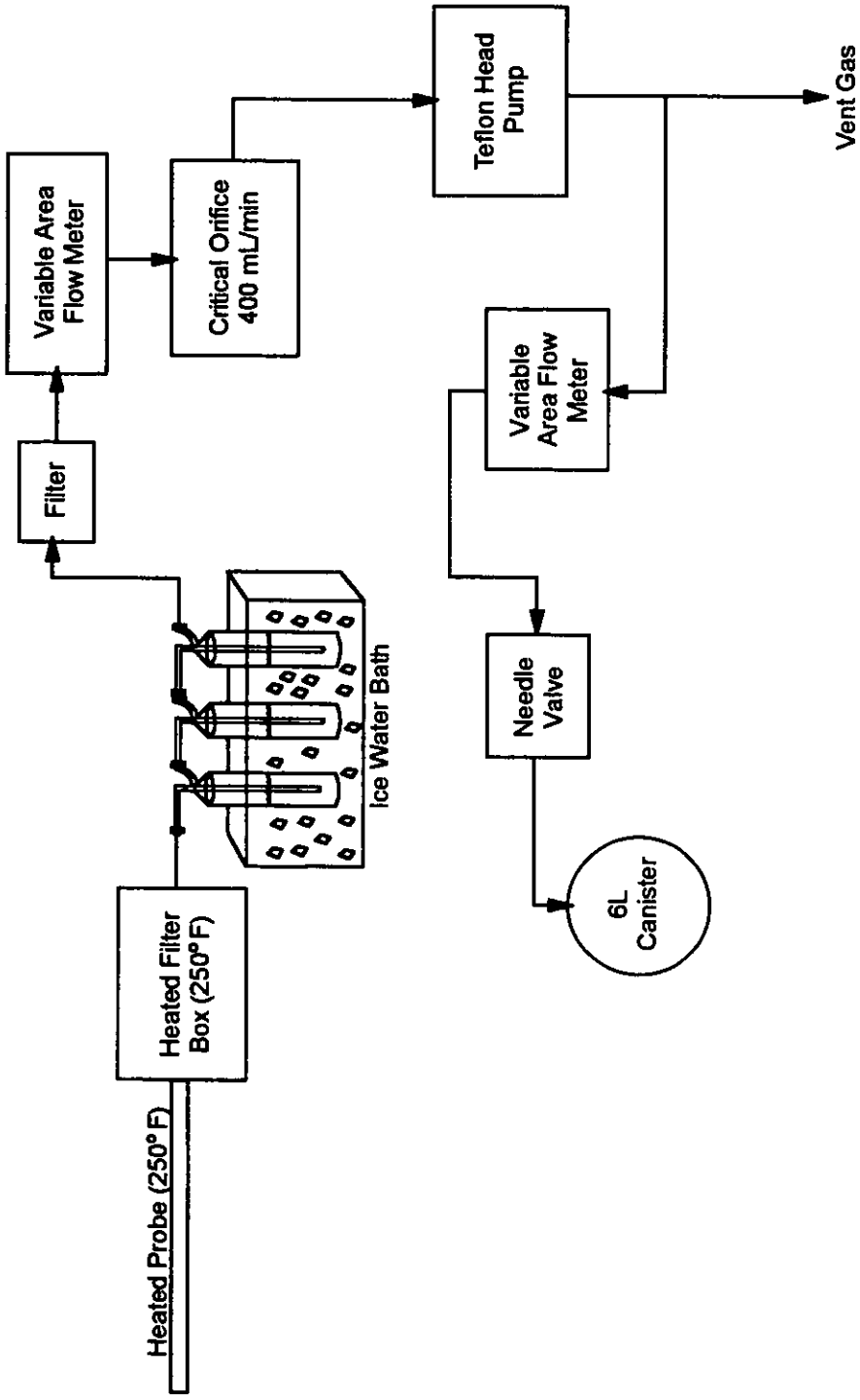

Figure 2.1 Combined Impinger and Canister Sampling Train

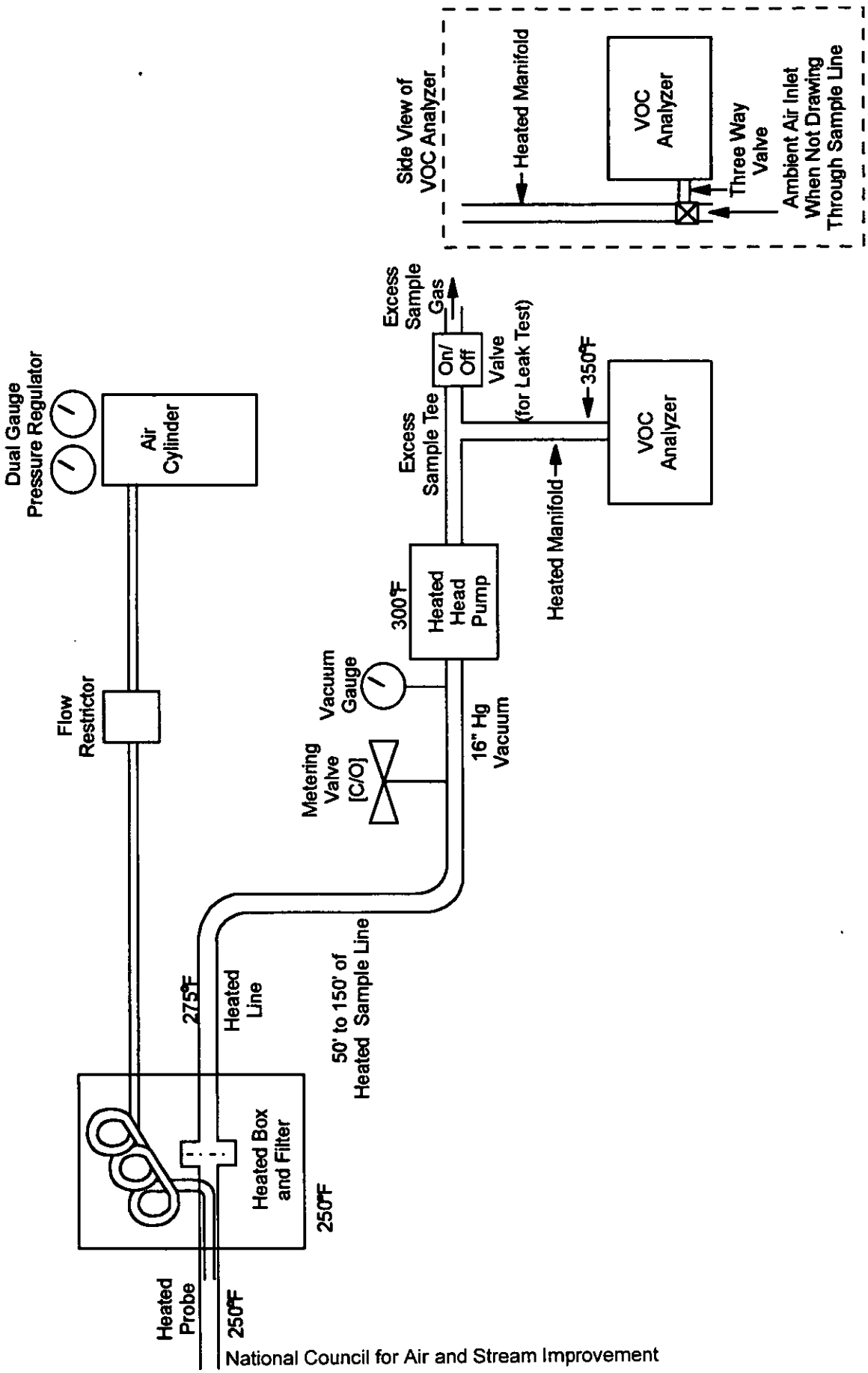

Figure 2.2 Method 25A Sampling Train

2.2.2 *Emission Sample Analytical Methods*

2.2.2.1 *Aqueous Impinger Content Analysis*

The contents of the three impingers were combined and an aliquot was analyzed by direct aqueous injection using a gas chromatograph with a flame ionization detector (GC/FID). The chromatographic peaks were quantitated by direct comparison to external standards prepared daily from stock solutions or by comparison to an internal standard (cyclohexanol) which was added to the impinger water. The compounds analyzed for by GC/FID in the impinger catch are indicated in Table 2.1. An aliquot of the liquid impinger catch was also analyzed for formaldehyde by the Acetylacetone Method (colorimetric analysis).

2.2.2.2 *Canister Content Analysis*

The canister contents were analyzed by a gas chromatograph equipped with a cryogenic sample concentrator and a mass selective detector (GC/MSD). For this analysis, an aliquot of canister gas is pumped into the sample concentrator, concentrated, separated by gas chromatography, and identified and quantitated at the mass spectrometer. Measured quantities of gas phase mixtures of reagent grade compounds are used to calibrate the GC/MSD for the compounds of interest. The total mass of each analyte collected is calculated based on the measured concentration and canister sample gas volume. The sample volume is determined by the difference between the pre- and post-sampling canister temperatures and pressures.

The canister contents were analyzed for terpene compounds by a gas chromatograph with a flame ionization detector (GC-FID). For this analysis, a 2 mL sample of the canister contents is transferred to the GC/FID via a gas sample loop. Measured quantities of gas phase mixtures of terpene compounds are used to calibrate the GC-FID. Tables 2.1 and 2.2 list the HAP and non-HAP compounds quantitated in the canister sample along with the analysis technique and the method detection limit for each compound.

A Bacharach combustion gas analyzer was used to determine the concentrations of CO, O_2 and CO_2 in the canister sample contents.

Table 2.1. Target HAP Analytes with Target Detection Limits and Analysis Techniques			
HAP Analyte	Method Detection Limit, ppmv	Analysis Method	
		Impinger	Canister
acetaldehyde	0.26*	GC/FID	GC/MS
acrolein	0.16*	GC/FID	GC/MS
benzene	0.10**	none	GC/MS
bromomethane	0.10**	none	GC/MS
chloroethane	0.10**	none	GC/MS
chloroethene	0.10**	none	GC/MS
cumene	0.10**	none	GCFID
1,2-dichloroethane	0.10**	none	GC/MS
formaldehyde	0.13*	Colorimetric	none
methanol	0.35*	GC/FID	GC/MS
methyl ethyl ketone	0.16*	GC/FID	GC/MS
methyl isobutyl ketone	0.09*	GC/FID	GC/MS
methylene chloride	0.10**	none	GC/MS
phenol	0.21*	GC/FID	GC/MS
propionaldehyde	0.18*	GC/FID	GC/MS
styrene	0.10**	none	GC/MS
toluene	0.10**	none	GC/MS
1,2,4-trichlorobenzene	0.10**	none	GC/MS
m,p-xylene	0.10**	none	GC/MS
o-xylene	0.10**	none	GC/MS

*based on a total impinger catch volume of 75 mL
**based on a 2:1 dilution of the canister sample

Table 2.2. Target Non-HAP Analytes with Analysis Techniques Indicated		
Non-HAP Analyte	Analysis Method	
	Impinger	Canister
acetone	GC/FID	GC/MS
camphene	none	GC/FID
3-carene	none	GC/FID
p-cymene	none	GC/FID
cis-1,2-dichloroethylene	none	GC/MS
limonene	none	GC/FID
p-mentha-1,5-diene	none	GC/FID
alpha-pinene	none	GC/FID
beta-pinene	none	GC/FID

2.2.3 *Process Liquid Stream Sampling and Analysis Methods*

In addition to the vent gas samples, a number of process streams were sampled for subsequent analysis. The process samples were obtained using an appropriate device and were transferred to

brown glass sample containers with Teflon lids. After the grab samples were collected in the field, they were chilled and shipped to the appropriate laboratory for analysis. The analysis described in Section 2.2.3.2 was performed at the NCASI Southern Regional Center. The analyses described in Sections 2.2.3.3, 2.2.3.4, 2.2.3.5, and 2.2.3.6 were performed at the NCASI West Coast Regional Center.

If solids were present in liquid samples, they were removed by centrifugation and decanting prior to performing the extractions for glycol ethers, semivolatiles and chlorinated phenolics. Samples used for the volatiles analyses were chilled and decanted into a syringe. For the acetaldehyde, methanol, acetone, methyl ethyl ketone, methyl isobutyl ketone, phenol, and propionaldehyde analysis, an aliquot was removed from the sample vial and placed in an autosampler vial for analysis.

The following is a brief description of the liquid stream analysis methods used in this study. The full procedures are described in NCASI Technical Bulletin No. 774.

2.2.3.1 *pH/Temperature Measurement*

The samples were collected and placed in polyethylene beakers. The temperature was measured immediately. The pH was measured when the beaker contents had cooled to less than 50°C.

2.2.3.2 *GC/FID Method for Methanol, Acetone, Methyl Ethyl Ketone, Methyl Isobutyl Ketone, Phenol, Propionaldehyde, and Acetaldehyde*

For measurement of methanol, acetone, methyl ethyl ketone, methyl isobutyl ketone, phenol, propionaldehyde, and acetaldehyde in process liquid streams, a direct aqueous injection, GC/FID method developed by NCASI was selected. This method has been used extensively by NCASI, and has been found to perform well for many sample types.

In the method used for this study, the liquid samples were collected by submerging the sample container in the process liquid, or by filling the sample container from a valve outlet. In some cases, a cooling coil was attached to the valve outlet to cool the liquid before it entered the sample bottle. The sample containers were filled to zero headspace and were kept at 6-10°C until analysis.

2.2.3.3 *Solvent Extraction, GC/MS Process Liquid Analysis Method for Glycol Ethers*

This method involves: (1) salting an aliquot of the sample to improve extraction efficiency, (2) five successive extractions with dichloromethane, (3) concentration of the combined extract, and (4) analysis of the concentrated extract via gas chromatography with mass selective detection.

The analyte list for the solvent extraction, GC/MS method for glycol ethers is shown in Table 2.3.

Table 2.3. Analyte List for the Solvent Extraction, GC/MS Process Liquid Analysis Method for Glycol Ethers	
2-butoxyethanol	2-(2-ethoxyethoxy)ethanol
2-(2-butoxyethoxy)ethanol	2-[2-(2-ethoxyethoxy)ethoxy]ethanol
1,2-dimethoxyethane/2-methoxethanol*	methoxy-2-propanol
diphenoxyethane	2-(methoxyethoxy)ethanol
2-ethoxyethanol	2-phenoxyethanol

*These compounds were not separated.

2.2.3.4 *EPA Method 8260 for Volatiles Analysis in Process Liquids*

EPA SW-846 Method 8260 was used to determine the purgable volatile organic compound content of the process liquid samples collected during the study. This method employs a purge and trap procedure followed by capillary column gas chromatography with mass selective detection. The following modifications were made to the method to meet the objectives of this study: a reduced analyte list, addition of several terpenes to the analyte list, use of a Vocarb 300 sorbent trap, and a modified GC temperature program. The analytes for this study are listed in Table 2.4.

Table 2.4. Modified EPA Method 8260 Analyte List	
acetonitrile	n-hexane
acrolein	iodomethane
allyl chloride	isopropyl benzene
benzene	limonene
1,3-butadiene	methyl methacrylate
2-butanone	4-methyl-2-pentanone
carbon disulfide	methyl-t-butyl-ether
carbon tetrachloride	methylene chloride
delta-3-carene	naphthalene
chlorobenzene	alpha-pinene
chloroethane	beta-pinene
chloroform	propionaldehyde
chloromethane	styrene
1,2-dibromo-3-chloropropane	1,1,2,2-tetrachloroethane
1,2-dibromoethane	tetrachloroethane
dibromomethane	toluene
1,1-dichloroethane	1,2,4-trichlorobenzene
1,2-dichloroethane	1,1,1-trichloroethane
1,1-dichloroethene	1,1,2-trichloroethane
1,2-dichloropropane	trichloroethane
cis-1,3-dichloropropene	2,2,4-trimethylpentane
trans-1,3-dichloropropene	vinyl acetate
1,4-dioxane	vinyl chloride
ethyl acrylate	m-xylene/p-xylene*
ethylbenzene	o-xylene

*These compounds were not separated.

2.2.3.5 *EPA Methods 3510B and 8270B for Semivolatiles in Process Liquid Samples*

The semivolatile compounds, except for the chlorinated phenolics, were analyzed via EPA SW-846 Methods 3510B and 8270B. Method 3510B involves: (1) adjusting the sample aliquot pH to >11 with sodium hydroxide, (2) three successive extractions of the pH adjusted aliquot with dichloromethane, and (3) concentration of the combined dichloromethane extracts. Method 8270B involves the analysis of the concentrated extract via gas chromatography with mass selective detection. The Method 8270B analyte list for this study is shown in Table 2.5.

Table 2.5. Modified EPA Method 8270B Analyte List	
acetophenone	bis(2-chloroethyl)ether
2-acetylaminofluorene	bis(2-chloroisopropyl)ether
biphenyl	hexachlorobenzene
di-n-butylphthalate	hexachlorobutadiene
2-chloroacetophenone	hexachloroethane
dibenzofuran	isophorone
1,4-dichlorobenzene	naphthalene
p-dimethylaminoazobenzene	nitrobenzene
dimethylphthalate	bis(2-ethylhexyl)phthalate
2,4-dinitrotoluene	1,2,4-trichlorobenzene

2.2.3.6 *NCASI Method CP86.01 for Chlorinated Phenolics in Process Liquids*

Process liquid samples were analyzed for chlorinated phenolics via NCASI Method CP86.01. This method involves: (1) preservation of the aqueous phase, from the Method 3510B extraction, with acid, (2) pH adjustment of the acid-preserved sample to 9 to 9.5 with four molar potassium carbonate, (3) acetylation of the sample, (4) three successive extractions of the acetylated sample with hexane, (5) concentration of the combined extract, and (6) analysis via gas chromatography with mass selective detection. For this study, the list of analytes included: phenol, o,m,p-cresols, 2,4,6-trichlorophenol, 2,4,5-trichlorophenol, and pentachlorophenol.

2.3 Data Analysis Protocol

To maintain uniform handling of data, a detailed data analysis protocol was developed. The data analysis protocol addressed issues such as (a) averaging of data from multiple analyses, duplicate samples, and multiple runs, (b) merging of data from multiple runs when some of the runs had non-detect concentrations, (c) method bias correction, and (d) data review for completeness and accuracy. The protocol details are fully described in Appendix A.

2.4 Data Reporting Protocol

In this report, the emission rates of individual compounds are reported in terms of mass emission rate for the specific compound. For total VOCs, the emission rate is reported as lb of carbon/unit of production (lb C/unit of production).

As described in Appendix A, all the emission data have been normalized for production rate. Table 2.6 presents information on the units of emission calculations. The production indices used in Table 2.6 are different for different sources. The factors for converting the emission data from one production index to another vary from mill to mill.

Compounds that were not detected above the method detection limit (MDL) are indicated in the results tables by "ND" which is followed by the detection limit. Thus, non-detects appear as ND x.x.Ex, where x.x.Ex is the MDL for that compound. The detect values are right justified and the non-detect values are left justified in the results tables so they can be easily distinguished from each other.

Table 2.6. Units of Emission Calculations

	Hardwood Veneer	Plywood	Engineered Wood Products	Particleboard	OSB	MDF	Fiberboard	Hardboard
Dryers	lb/MSF	lb/MSF 3/8"		lb/ODT	lb/ODT	lb/ODT	lb/MSF 1/2"	lb/ODT
Presses*		lb/MSF 3/8"	lb/MCF	lb/MSF 3/4"	lb/MSF 3/8"	lb/MSF 3/4"		lb/MSF 1/8"
Log Steaming Vats		lb/MSF 3/8"						
Veneer/Panel Chippers		lb/MSF 3/8"				lb/ODT		
Sanders		lb/MSF				lb/MSF		
Saws		lb/MSF 3/8"						
Refiners				lb/MSF 3/4"			lb/ODT	lb/ODT
Board Coolers				lb/MSF 3/4"				lb/MSF 1/8"
Baghouse Vents				lb/MSF 3/4"	lb/MSF 3/8"			
Blender Systems				lb/MSF 3/4"	lb/MSF 3/8"	lb/ODT		
Formers						lb/ODT	lb/ODT	lb/ODT
Fiber Washer							lb/ODT	
Raw Material Chipper							lb/ODT	lb/ODT
Hardboard Tempering Oven								lb/MSF 1/8"

*includes board cooler emissions where board cooler emissions are considered part of the total press emissions

MSF = 1000 ft^2; ODT = oven dried tons of raw material; MCF = 1000 ft^3

2.5 Calculation of Emission Rates

2.5.1 *Calculation of Source Emission Rates*

In this report, the source emission rates have been calculated by averaging the emission rates from all the runs on each source. In cases where multiple sampling runs were performed on a source, and at least one of the runs gave a value above the method detection limit for a compound, any other measurements below the detection limit for that compound were treated as zero when calculating the average emission rate for that source. Thus, if three individual runs at a source contained methanol at 0.24, 0.18, and ND 0.15 lb/ODT, the calculated methanol emission rate for the source would be 0.14 lb/ODTP ((0.24 + 0.18 +0)/3).

If, for a source, all the runs for a compound gave emission rates below the detection limit, the average emission has been reported as ND at the average of the detection limits of the individual runs. Individual sample run data are provided in Appendix B.

2.5.2 *Calculation of Process Unit Emission Rates*

In addition to calculating emission rates from individual vents, in many instances the emission rates from individual vents were combined to determine the average emission rates for a process unit. In order to accomplish this, the average emission rates of each compound from each vent were summed to obtain the average emission rate of that compound for the entire process unit. The following protocol was used in summing the individual unit data to obtain process unit emission rates:

(1) If a compound was not found above the detection limit at all of the individual vents which constituted the process unit, the process unit emission rate for that compound was given as ND along with the detection limit, which was calculated by summing the detection limits of the individual sources.

(2) If a compound was found above the detection limit at one or more vents in a process unit, those emission rates were summed and the emission rates from any sources where that compound was less than the quantitation limit were considered to be zero.

It should be noted that all of the vents from a single process unit were not always sampled simultaneously. Thus, it may not be possible to calculate the range of emissions from a process unit. One may, however, use the data included in Appendix B to obtain an understanding of the variability of each source.

2.5.3 *Calculation of Average Emission Rate from Similar Process Units*

For calculating the average emission rate for a compound from similar process units, if the compound was detected as being emitted from all the process units, the individual unit emission rates were averaged. However, if some of the process units were found to contain emissions below the detection limit, the measurements below the detection limit were treated as zero. Thus, if three presses were found to contain phenol at 0.25, 0.14, and ND 0.15 lb/MSF, the calculated average phenol emission rate for the presses would be 0.13 lb/MSF ((0.25 + 0.14 + 0)/3).

If a compound was below the detection limit from all the unit processes, the average emission has been reported as ND at the average of the detection limits of the individual sources.

2.5.4 *Calculation of Total HAP Emissions*

The average emission rates for each HAP compound from a source were added together as follows to determine total HAP emission rates. When the average emission rate for a HAP compound was

reported as above the method detection limit (i.e., at least one run had a concentration level above the quantitation limit), the compound was added at the reported average emission rate. When the average emission rate for a HAP compound was reported as non-detect (ND), the contribution from that compound was treated as zero in the total HAP calculation.

2.6 Comparison of Total HAP and VOC Emissions

The tables in the results section of this report contain data on both total organic HAP and VOC emissions from most of the sources. Since the total organic HAPs are a subset of VOCs, one would be inclined to compare the two to determine what fractions of VOCs are HAPs. However, the total VOC emission estimates are different from total HAP estimates in two ways. First, whereas the total HAP emission rate represents the sum of the emission rates of the individual HAPs, which are calculated by using the molecular weights of individual compounds, the total VOC analysis uses the molecular weight of carbon (12) to convert the measured ppm (v/v) concentration into a mass emission rate. Thus, different results are obtained from the two calculation methods even when the concentrations measured by the two methods are the same. For example, at a flow rate of 1,000 DSCFM, 100 ppm methanol would give a methanol emission rate of 4.7 lb/hr. However, at the same flow rate, 100 ppm of methanol measured as carbon would give an emission rate of 1.8 lb C/hr. Second, the FID may respond differently to an equivalent amount of carbon depending on the level of oxidation. For example, the HAP emissions are measured by calibrating the analytical instrument with the specific compound for which the analysis is being carried out. Thus when 1 ppm methanol is present in the stack gas, the HAP measurement method would report it as 1 ppm. On the other hand, for measuring VOCs, the FID is calibrated with methane or propane. Thus when 1 ppm methanol is present in the stack gas, the VOC measurement method would measure it in terms of equivalent methane or propane response, which is likely to be between 0.6 and 0.7 ppm.

For the reasons discussed above, the data generated from the total VOC analysis are different from the data generated from the other methods used in this study. Thus, the total VOC emission rate estimates are not directly comparable to the total HAP emission rate estimates which are based on other methods.

2.7 Abbreviations and Acronyms

A list of abbreviations and acronyms used in this study is shown in Table 2.7.

Table 2.7. List of Abbreviations and Acronyms

AF&PA	American Forest and Paper Association
AHA	American Hardboard Association
APA-Engineered Wood Association	American Plywood Association-Engineered Wood Association
°C	Degrees Celsius
CPA	Composite Panel Association
CRM	Certified Reference Material
EFB	Electrified Filter Bed
EPA	United States Environmental Protection Agency
°F	Degrees Fahrenheit
FB	Fiberboard
FID	Flame Ionization Detector
GC/FID	Gas Chromatography/Flame Ionization Detection/Detector
GC/MS	Gas Chromatography/Mass Spectrometer
HAP	Hazardous Air Pollutant
HB	Hardboard
HPVA	Hardwood Plywood and Veneer Association
HW	Hardwood
lb C	lb as carbon (Method 25A)
MACT	Maximum Achievable Control Technology
MCF	Thousand Cubic Feet
MDF	Medium Density Fiberboard
MDI	Methylene Diphenyl Isocyanate
MEK	Methyl Ethyl Ketone
mg	Milligram
MIBK	Methyl Isobutyl Ketone
min	Minute
mL	Milliliter
MLF	Thousand Linear Feet
MS	Mass Spectrometer
MSF	Thousand Square Feet
ODT	Oven Dried Tons
OSB	Oriented Strandboard
PB	Particleboard
PLY	Plywood
RCO	Regenerative Catalytic Oxidizer
RTO	Regenerative Thermal Oxidizer
SRC	NCASI Southern Regional Center
SW	Softwood
THC	Total Hydrocarbons (same as VOC)
TPD	Tons Per Day
VOC	EPA Method 25A Total Volatile Organic Compounds
WCRC	NCASI West Coast Regional Center
Wet ESP	Wet Electrostatic Precipitator

3.0 SOURCE SELECTION AND FIELD STUDY PROTOCOL

A number of considerations guided the selection of the mills for the Wood Products MACT Study. The facilities needed to: (1) be representative of similar facilities in operation in the country, (2) operate processes being considered by EPA for potential MACT regulations, and (3) include a variety of production processes using a variety of furnishes. For each production process type, parameters thought to affect emissions of organic compounds were identified so that the study would include sources representing as many of the important parameters as possible. Candidate mills were selected on the basis of product type, followed by considerations of wood species, the presence of control equipment, dryer type and press type. For the MDF and hardboard/fiberboard mills, the fiber preparation and board production processes used were also considered. The list of important parameters used in selecting mills for the study is included in Table 3.1. Many of the mills which satisfied the requirements of the study were contacted and/or visited to assess the feasibility of conducting the study at that location.

The following practical considerations also weighed in the selection process. The timetable for completion of the study and the available resources limited the scope of this study to emission studies at 29 mills. The selected facilities had to have sources which could be safely sampled or could be modified for safe sampling. Since emission rates were to be totaled by process unit, it was necessary to be able to sample the entire process unit or to be able to accurately estimate the emissions from sources within the unit which could not be sampled. It was very important that the selected mills be willing and able to supply the resources necessary for test planning, source modification, process operating data collection, and report review. To minimize costs associated with the project it was desirable to test mills that produced different products at the same location, e.g., plywood and particleboard. Also, to minimize costs it was necessary to test mills with relatively few and easy to sample stacks and vents. For example, a plant with a single roof vent above the press with previously installed stack extensions and sampling ports would be preferred over a location with multiple vents and no sampling ports. To insure the maximum usefulness of the data, it was important that the candidate mills met the following conditions:

1. Availability of up-to-date process flow diagrams and fan curves.
2. Well-instrumented processes with automated recording of wood furnish feed rates, dryer temperatures, inlet/outlet moisture levels, fuel firing rates, resin application rates, etc.
3. Capability of operating the plant in a stable mode for a period of several days.
4. Absence of equipment, processes, or operating practices which are highly unusual.
5. Presence of VOC or particulate control devices where both the inlet and outlet could be easily sampled.

On the basis of all these considerations, 29 wood products mills from different regions of the country were selected to ensure a broad representation of wood products mill sources. Table 3.2 is a summary of the wood products mills and the process units selected for sampling. Table 3.3 lists each of the plywood mills selected for testing, the process units tested at each of these mills, the raw material, product and other essential process information.

Once the mills were selected, a tentative schedule was developed which took into account geographic location, climate and other logistical considerations. A preliminary test plan for each facility was developed using the information gathered from surveys and the initial site visit. This plan specified the units to be included in the study and tentative dates for the testing. NCASI project management

staff then visited each of the selected facilities and generated a detailed study plan which included sources to be sampled, necessary source modifications, process data to be collected, liquid samples to be collected, and a site-specific safety plan.

The field study at each site lasted approximately one week. NCASI staff collected all of the liquid and vent samples. Process data were collected by mill staff and the NCASI project manager on-site. Canisters and liquid samples were shipped to the appropriate NCASI laboratory for analysis. The NCASI project manager remained on-site during the entire study to oversee the testing and to ensure that data quality objectives were met.

Significant effort was invested in assuring that the tests were carried out during periods when the area of the mill being tested was operating normally. Nonetheless, it should be noted that there may still be significant differences in process operating parameters from run to run and source to source.

Table 3.1. Parameters Considered in Wood Products Mill Selection

Mill Type	Parameters Considered
Plywood	Hardwood vs. Softwood, Western vs. Southern, Gas Fired vs. Steam Heated Dryers, Wet ESP vs. EFB Particulate Control Devices, RTO vs. RCO VOC Control Devices
Engineered Wood Products	Availability and Suitability for Testing
Particleboard	Wood Species, Western vs. Southern, Wet ESP vs. EFB vs. Venturi Scrubber Particulate Control Devices
OSB	Hardwood vs. Softwood, Southern vs. Northern, Wet ESP Particulate Control Devices, RTO vs. RCO vs. Biofilter VOC Control Devices
MDF	Hardwood vs. Softwood, Western vs. Southern, Blowline vs. Non-Blowline Blending, Scrubber vs. Fabric Filter vs. Multiclone Particulate Control Devices, RTO VOC Control Devices
Hardboard	Northern Hardwood vs. Southern Hardwood, Wet/Dry vs. Dry/Dry vs. Wet/Wet Processes, Direct and Indirectly Heated Dryers, RTO VOC Control Devices
Fiberboard	Furnish, Wet/Dry Processes

Table 3.2. Summary of Wood Products Mills and Process Units Selected for Sampling

Mill Type	No. Mills Tested	Process Units Tested
Plywood/HW Veneer	11	Dryers, Presses, Veneer/Panel Chippers, Saws, Sanders, Log Steaming Vats
Engineered Wood Products	2	Presses, Wooden I-Beam Curing, Baghouse Vents
Particleboard	4	Dryers, Presses, Refiners, Board Coolers, Baghouse Vents, Blender Systems
OSB	4	Dryers, Presses, Panel Chipper, Baghouse Vents, Blender Systems
MDF	4	Dryers, Presses, Panel Chippers, Sanders, Blender Systems, Formers
Hardboard/Fiberboard	4	Dryers, Presses, Refiners, Board Coolers, Formers, Fiber Washers, Raw Material Chippers, Hardboard Tempering Ovens

Table 3.3. Plywood and Hardwood Veneer Mills Selected for Testing

Mill Code	Location	Product(s) Made While Testing	Wood Furnish	Areas Tests	Control Devices and and Associated Process Units Tested
065	Northwest	hardwood plywood (1/8" - 1")	Douglas-fir (core), purchased hardwood (face)	presses	none
112	Northwest	softwood plywood (3/8" - 23/32")	Douglas-fir and other western softwoods	steam-heated dryers, radio frequency dryer, press, log steaming vat	WESP on dryers
115	Northwest	softwood plywood (19/32" - 23/32")	Douglas-fir and larch	steam heated dryers, press	WESP on dryers
155	Northwest	hardwood plywood (3/4")	White and Douglas-fir (core), purchased hardwood veneer	steam heated softwood veneer dryers, press	EFB on dryers
165	Southeast	softwood plywood (1/2", 3/4")	southern pine	steam-heated softwood veneer dryer, radio frequency dryer, press, dry trim chipper	RTO on dryers
170	Southeast	softwood plywood (3/4")	southern pine	steam-heated veneer dryer, press, sander, saw	RTO on dryers
188	Northwest	softwood plywood	Douglas-fir	steam-heated veneer dryers	WESP on dryers
194	Southeast	softwood plywood (3/4")	southern pine	steam-heated and gas-fired veneer dryers, presses	RCO on dryers
400	Midwest	hardwood veneer (1/36", 1/46")	various hardwoods	steam-heated veneer dryers	none
401	Midwest	hardwood veneer (1/49" - 1/36")	various hardwoods	steam-heated veneer dryers	none
405	Southeast	hardwood plywood (5/8", 3/4")	yellow poplar (core), purchased hardwood (face)	steam-heated veneer dryers, press, combined dust baghouse	none

4.0 PROCESS DESCRIPTIONS AND TEST PROGRAMS

4.1 Process Description and Test Program, Mill 065

Mill 065 is located in the northwestern United States and produces approximately 60 million ft^2/year (3/8 inch basis) of mainly hardwood plywood. During testing of the combined emissions from the two hardwood plywood hot presses at this facility, dry veneer from a number of species was used as face veneer. These species included cedar, cherry, hickory, kadama, and oak. The core for all of the plywood produced during emission testing was dry Douglas-fir veneer. Panels of thickness between 1/6" and 1/2" were produced during this testing. The veneer used during this study was dried off-site, transported to this facility, and supplied to one of the three manual layup lines. These lines employ roller-spreaders to apply urea-formaldehyde glue to the veneer sheets, which are then assembled into plywood sheets. The stacks of glued veneer are then conveyed to one of the two 30 opening hot presses, and the plywood sheets are individually fed to the loader, which in turns feeds the sheets into the press. The press then closes and is maintained for 2 to 5 minutes (depending on the product) at approximately 200 psi and 230°F. After the press opens, the hot plywood sheets are ejected to the unloader, stacked, and transported to the finishing area. The emission test program for this facility is outlined in Table 4.1.1.

4.1.1 *Plywood Multi-Opening Presses, Mill 065*

As shown in Figure 4.1.1, Mill 065 has two adjacent multi-opening presses located directly below a doghouse or cupola roof enclosure. The two presses each have 30 openings which measure 54 inches x 106 inches. The no. 1 press was manufactured by Columbia, and the no. 2 press was manufactured by Superior. The presses are steam heated to approximately 230°F. Press times vary according to the thickness of the sheets loaded in the press, with thicker sheets having longer press times. Between the two presses, an average of 33 loads were pressed per test run. Process operating data obtained during testing are summarized in Table 4.1.2.

Table 4.1.1. Emission Test Program, Mill 065

Unit	Source Code	Source Description	Emission Testing Procedure*		Test Schedule		
			NICM	M25A	Run	Date	Time
Plywood Presses	1PB1	Press Vent	X	X	1	8/19/97	1104-1204
			X	X	2	8/19/97	1300-1415
			X	X	3	8/19/97	1442-1632

*NICM: NCASI Impinger/Canister Method
M25A: Modified Method 25A (Total Hydrocarbon Analyzer)

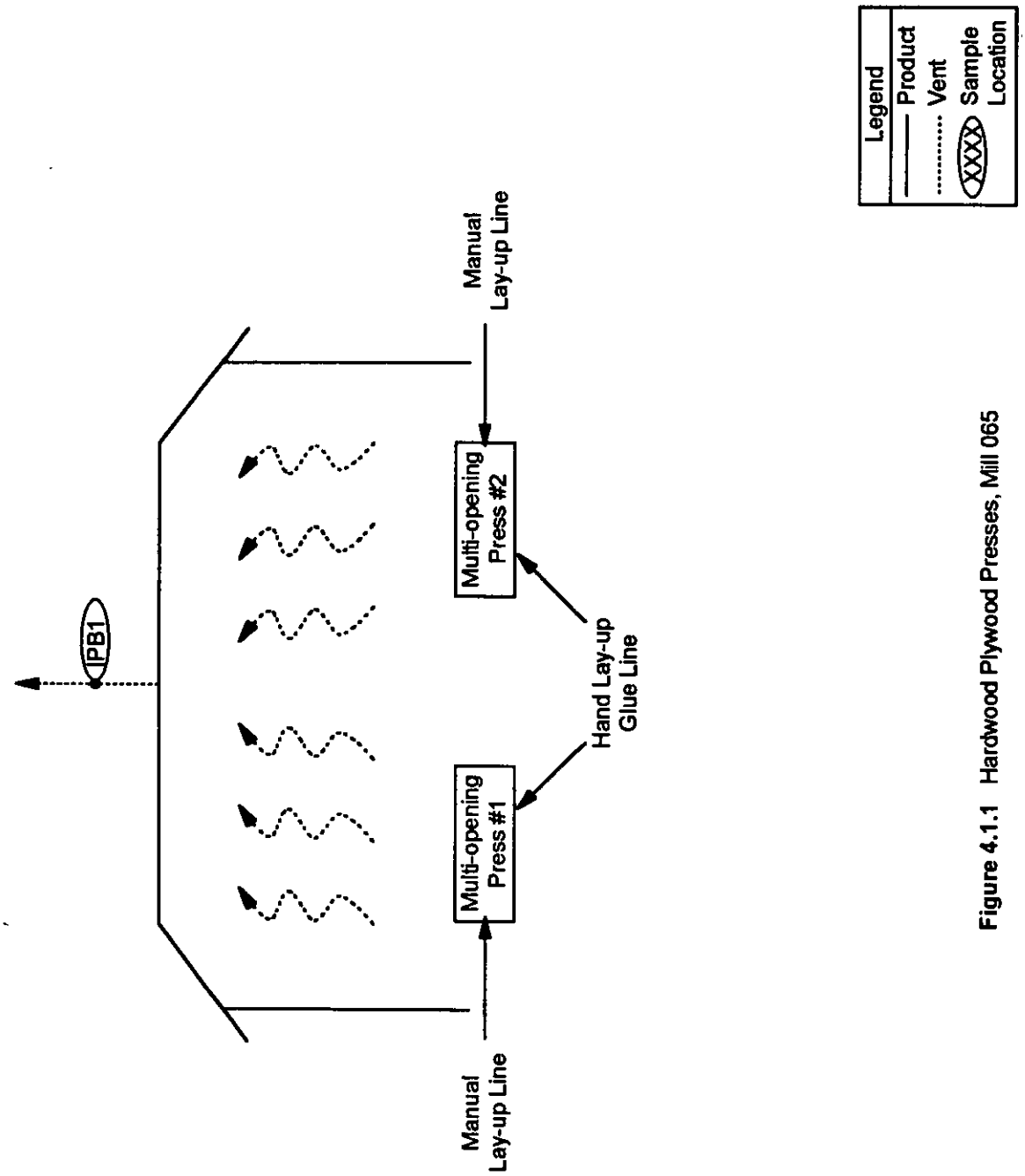

Figure 4.1.1 Hardwood Plywood Presses, Mill 065

Table 4.1.2. Process Operating Conditions During Testing of the Hardwood Plywood Presses, Mill 065

Run No.	Press No.	Sheet Type: Thickness, inches	Sheet Type: No. Plies	Sheet Type: Core Species	Sheet Type: Face Species	No. Loads	Resin Type	Press Time, min	Press Temp., °F	Total No. Sheets Produced	Production Rate, MSF/hr	Production Rate, MSF as 3/8"/hr
1	1	0.50	5	fir	hickory	2	UF	2-5	230	60	1.9	2.6
1	1	0.50	5	fir	cherry	3	UF	2-5	230	90	2.9	3.8
1	1	0.25	3	fir	oak	8	UF	2-5	230	240	7.7	5.1
1	2	0.25	3	fir	oak	13	UF	2-5	230	390	12.5	8.3
					TOTAL>>>	26			TOTAL>>>	780	25.0	19.8
2	1	0.25	3	fir	cedar	9	UF	2-5	230	270	8.6	5.8
2	1	0.16	3	fir	kadama	10	UF	2-5	230	300	9.6	4.0
2	2	0.25	3	fir	oak	15	UF	2-5	230	450	14.4	9.6
2	2	0.25	3	fir	cedar	5	UF	2-5	230	150	4.8	3.2
					TOTAL>>>	39			TOTAL>>>	1170	37.4	22.6
3	1	0.16	3	fir	kadama	7	UF	2-5	230	210	6.7	2.8
3	1	0.25	3	fir	cedar	3	UF	2-5	230	90	2.9	1.9
3	1	0.25	3	fir	oak	8	UF	2-5	230	240	7.7	5.1
3	2	0.25	3	fir	oak	5	UF	2-5	230	150	4.8	3.2
3	2	0.25	3	fir	cedar	12	UF	2-5	230	360	11.5	7.7
					TOTAL>>>	35			TOTAL>>>	1050	33.6	20.7

*UF = Urea Formaldehyde

4.2 Process Description and Test Program, Mill 112

Figure 4.2.1 is a schematic representation of the process flow at Mill 112. This mill is located in the Northwestern United States and produces approximately 225 million ft^2/year (3/8" basis) of softwood plywood. The CCX and CDX grade plywood sheathing produced ranges in thickness from 3/8" to 23/32". Douglas-fir is the primary furnish at this facility, but larch, white fir and ponderosa pine are also used.

Logs are stored in the log yard prior to debarking and steaming. In the summertime, water sprays are employed to minimize checking. After debarking, the logs are cut to length and loaded into one of nine drive-in log steaming vats. Each of these vats has a capacity of approximately 85 MSF (3/8" basis). One vat is opened every 3 hours. As water sprays and live steam are added to the vats, the log blocks slowly heat to the desired peeling temperature (approximately 110°F).

Once they are removed from the vats, the preheated blocks are placed in bins which feed a single rotary peeler or lathe. The resulting green veneer is clipped, sorted and stacked. Green wood residue is chipped and sold to either a paper mill or a particleboard mill, depending on particle size. The resulting stacks of green sliced veneer sheets are then transported to one of two dryers. These dryers (labeled numbers 2 and 3 by the mill) are multiple deck, steam heated, two zone, cross-circulation dryers in which air is circulated perpendicular to the direction of veneer flow. No zone-to-zone air recirculation is practiced.

Individual sheets of veneer are transported into the first zone of the veneer dryer, which is primarily intended to bring the sheets to a fixed temperature. These hot sheets are conveyed into the second zone of the dryer, which functions to reduce the moisture in the veneer sheets to a moisture content which will allow successful plywood construction. The dried sheets are conveyed through a veneer cooling section, which functions to equilibrate the moisture and temperature in the wood. As the sheets emerge from the veneer cooling section, they are sorted and stacked. Sheets which are not adequately dried (redry) are stacked and transported to a radio frequency dryer. Vent emissions from the heated zones of the two veneer dryers at this facility are collected and sent to a wet electrostatic precipitator.

Stacks of dried veneer are transported to a single automated layup line, where plywood sheets are assembled from alternating layers of veneer and glue, trimmed, and fed to a stacker. The stacks of glued sheets are then conveyed to one of two press lines, where a prepress compresses the stack for a time period sufficient to allow the glued veneer sheets to adhere to one another. The resulting stacks of plywood sheets are conveyed to a hot press, where the sheets are individually fed into the loader. These sheets are conveyed into the open press, which closes once all the sheets are loaded. When the hot press opens, a load of hot plywood sheets is conveyed to the unloader and new sheets are loaded. The stack of unloaded sheets is moved to finishing, where the sheets are individually trimmed to size, sanded and packaged for transport.

Table 4.2.1 summarizes the emissions test plan at Mill 112, including process units tested, sources associated with each unit, sampling and analytical procedures used, and the test schedule. Table 4.2.2 summarizes the process liquid test program.

4.2.1 *Softwood Veneer Dryer, Mill 112*

There are two veneer dryers at this facility. Each of these dryers has two heated zones, utilizes indirect steam heat, circulates air perpendicular to the direction of veneer flow, and does not practice zone-to-zone air recirculation. In these dryers, air circulates through steam coils in the top of the

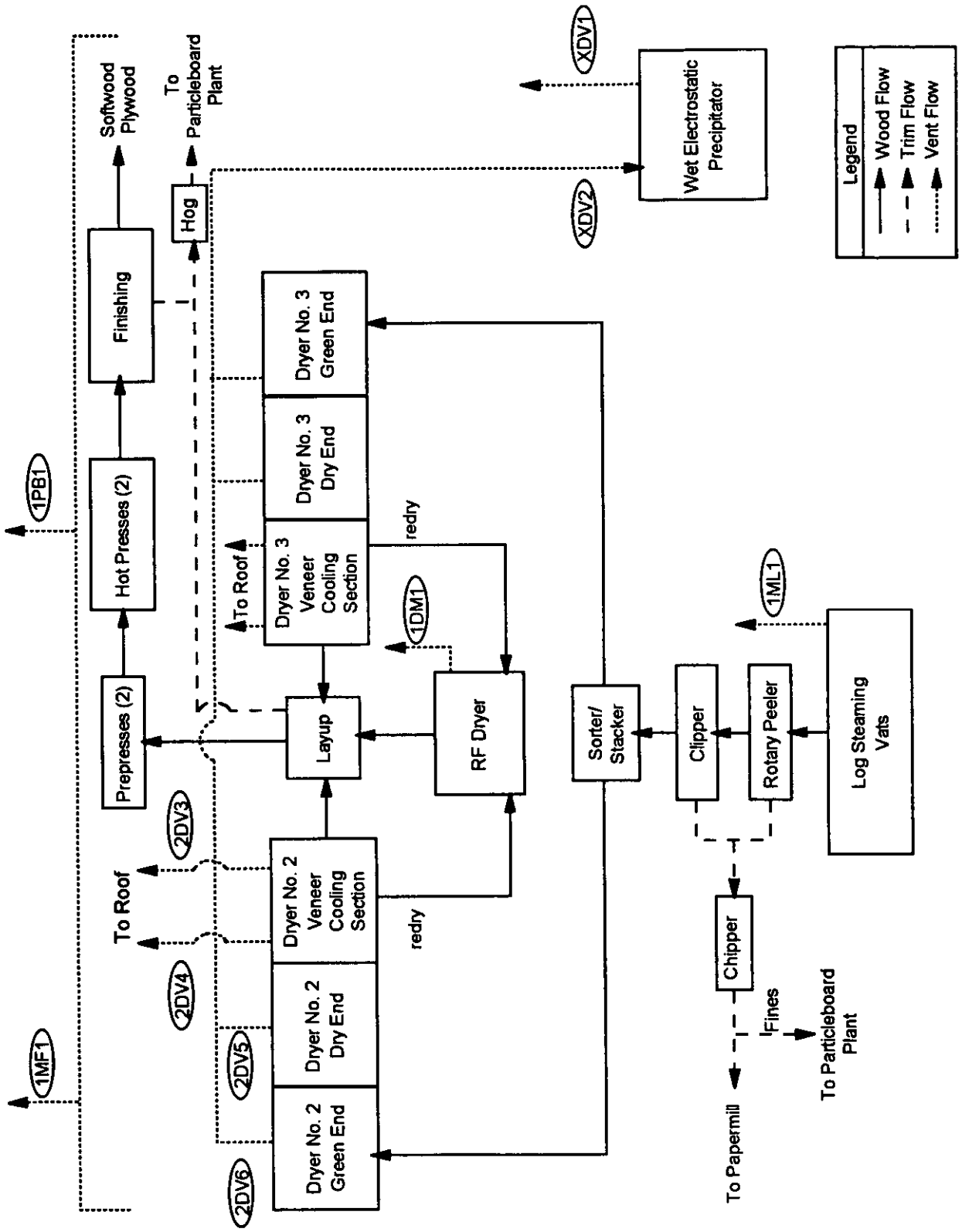

Figure 4.2.1 Overall Process Flow Diagram, Mill 112

Table 4.2.1. Emission Test Program, Mill 112

Unit	Source Code	Source Description	Emission Testing Procedure*			Test Schedule		
			NICM	CO	M25A	Run	Date	Time
Softwood Veneer Dryer	XDV1	WESP Exhaust Douglas-fir Furnish	X			1	7/29/97	1245-1345
			X		X	2	7/29/97	1520-1620
			X		X	3	7/29/97	1733-1833
		WESP Exhaust Pine/Fir Furnish	X			4	7/31/97	1225-1325
			X		X	5	7/31/97	1440-1520
			X		X	6	8/1/97	0937-1037
	XDV2	WESP Inlet Douglas-fir Furnish	X		X	1	7/29/97	1245-1345
			X			2	7/29/97	1520-1620
			X			3	7/29/97	1733-1833
		WESP Inlet Pine/Fir Furnish	X		X	4	7/31/97	1225-1325
			X			5	7/31/97	1440-1520
			X			6	8/1/97	0937-1037
	2DV5	Dryer No. 2, Dry End Exhaust Douglas-fir Furnish	X		X	1	7/29/97	1245-1345
			X			2	7/29/97	1520-1620
			X		X	3	7/29/97	1733-1833
		Dryer No. 2, Dry End Exhaust Pine/Fir Furnish	X			4	7/31/97	1225-1325
			X		X	5	7/31/97	1440-1520
			X		X	6	8/1/97	0937-1037
	2DV6	Dryer No. 2, Green End Exhaust Douglas-fir Furnish	X			1	7/29/97	1245-1345
			X		X	2	7/29/97	1520-1620
			X			3	7/29/97	1733-1833
		Dryer No. 2, Green End Exhaust Pine/Fir Furnish	X		X	4	7/31/97	1225-1325
			X			5	7/31/97	1440-1520
			X			6	8/1/97	0937-1037
	2DV3	Dryer No. 2, Board Cooling Section Exhaust No. 2	X			1	7/28/97	1455-1555
			X		X	2	7/28/97	1723-1817
			X		X	3	7/28/97	1955-2055
	2DV4	Dryer No. 2, Board Cooling Section Exhaust No. 1	X			1	7/28/97	1455-1555
			X			2	7/28/97	1723-1817
			X			3	7/28/97	1955-2055

Table 4.2.1. (Cont'd) Emission Test Program, Mill 112

Unit	Source Code	Source Description	Emission Testing Procedure*			Test Schedule		
			NICM	CO	M25A	Run	Date	Time
Softwood Veneer Dryer (Cont'd)	1MF1	Veneer Dryer No. 2, Building Exhaust	X			1	7/28/97	1455-1555
			X			2	7/28/97	1723-1817
			X			3	7/28/97	1955-2055
Softwood Plywood Hot Board Press	1PB1	Powered Vent Above Board Press	X		X	1	7/30/97	1135-1235
			X		X	2	7/30/97	1400-1500
			X		X	3	7/30/97	1547-1647
Radio Frequency Dryer	1DM1	RF Dryer Exhaust	X		X	1	7/30/97	1212-1312
			X		X	2	7/31/97	0735-0835
			X		X	3	7/31/97	0928-1028
Log Steaming Vat	1ML1	Vat Exhaust	X			1	7/28/97	1100-1200
			X			2	7/28/97	1240-1340
			X			3	7/28/97	1455-1555

*NICM: NCASI Impinger/Canister Method; CO: Bacharach Combustion Analysis; M25A: Modified Method 25A (Total Hydrocarbon Analyzer)

Table 4.2.2. Process Liquid Test Program, Mill 112

Unit	Source Code	Source Description	Liquid Sample Testing Procedure		Test Schedule		
			GC/FID	EPA 602*	Run	Date	Time
Softwood Veneer Dryer	XDV1L	WESP Quench Water	X		1	7/29/97	1315
			X		2	7/29/97	1550
			X		3	7/29/97	1800
			X		4	7/31/97	1300
			X	X	5	7/31/97	1400
			X	X	6	8/1/97	1000
	XDV2L	WESP Stack Sump Condensate	X		1	7/29/97	1320
			X		2	7/29/97	1555
			X		3	7/29/97	1805
			X		4	7/31/97	1305
			X		5	7/31/97	1405
			X		6	8/1/97	1005
Log Steaming Vat	1ML1L		X		1	7/28/97	1130
			X		2	7/28/97	1300
			X		3	7/28/97	1430

*EPA-600/4-79-020, *Methods for Chemical Analysis of Water and Wastes,* Revised March 1983; analysis for benzene, chlorobenzenes, ethyl benzene, toluene, xylenes and MTBE.

dryer and subsequently passes across the veneer as it moves through the dryer. These dryers are labeled no. 2 and no. 3 by the mill. Dryer no. 2, which is illustrated in Figure 4.2.2, is a Moore dryer with 6 decks (3 top and 3 bottom). Dryer no. 3 is a Coe dryer with 8 decks (3 top and 5 bottom). Each of these dryers has 4 vents: one from the green end, one from the dry end, and two from the board cooling section. The exhaust from the board cooling vents is uncontrolled.

The green and dry end vents from both dryers are connected to a common header, which serves as an inlet duct for a Geoenergy e-tube-type wet electrostatic precipitator (WESP). This precipitator is diagrammed in Figure 4.2.3. The precipitator operating conditions during testing are recorded in Table 4.2.3. Quench sprays are employed to cool the gas stream to adiabatic saturation conditions before it reaches the WESP. The large droplets from the quench sprays and larger particulates are removed in a cyclone, the effluent from which is fed to the skimmer tank. The gas stream exiting the cyclone passes through plates to ensure uniform distribution of airflow to the e-tubes, which contain electrode discs on wires. Entrained fine mist droplets are forced to the tube walls as they flow down past the first disc in the tube, thus creating a continuously wetted tube surface. As the gas stream moves down the tube, past other electrode discs, fine particulates are forced to the tube walls and picked up by the water on the surface, which drains to the ESP sump. Every 2 hours, approximately 400 gal of fresh water is used to wash down the tube walls. This water drains to the ESP sump.

The ESP sump contents are pumped to a skimmer tank, where pitch is removed, and the water is recycled to the quench sprays. Pitch is the term commonly applied to the gummy non-water soluble natural components evaporated from the veneer at dryer temperatures which condense at the lower temperatures in the WESP. Once per 8 hour shift, caustic is added to the water used for this washdown. This keeps the pH in the skimmer tank high enough to cause the pitch to float. Skimmed pitch slides down a chute into a burlap bag. The water recycle system on this precipitator is designed to balance the water evaporated with water added in washing, and does not normally produce an effluent. During this testing, however, a line was plugged between a condensate sump under the stack and the ESP sump. Consequently, the stack sump contents were periodically pumped to the log steaming vats. Measurements were made of the sump levels during testing of the ESP, and flow from the stack sump was found to average 7 gallons per hour. Samples of the quench water (XDV1L) and the stack sump condensate (XDV2L) were collected

Seven sampling points were selected to characterize emissions from the veneer drying process. The two cooling section exhausts from the no. 2 dryer (2DV3 and 2DV4) and a building vent over the dryer (1MF1) were tested while a mix of Ponderosa pine and Douglas-fir was dried. The green and dry end vents from the no. 2 dryer (2DV6 and 2DV5, respectively) and the inlet and outlet of the WESP (XDV2 and XDV1, respectively) were tested simultaneously under two sets of conditions. Three runs were performed while Douglas-fir was dried in both the no. 2 and no. 3 dryers and three runs were performed while Ponderosa pine was dried in the no. 2 dryer and Douglas-fir was dried in the no. 3 dryer. Table 4.2.4 lists the veneer dryer process operating conditions recorded during the testing.

4.2.2 *Softwood Plywood Hot press, Mill 112*

The layup line and hot press area at this mill are illustrated in Figure 4.2.4. A face sheet of dried veneer is placed on a moving belt, alternating layers of glue and veneer are laid upon that, and a final face sheet is placed on top. These partially bonded plywood sheets are trimmed and then stacked either 30 or 36 sheets high, depending upon the hot press to which they will be fed. Hot press no. 1 has 30 openings, and hot press no. 2 has 36. The stacks of plywood are compressed in a prepress at 1250 psi for 90 seconds to bond the layers of veneer together. Plywood sheets are individually loaded into the hot press loader and subsequently fed into the hot press, which closes and begins

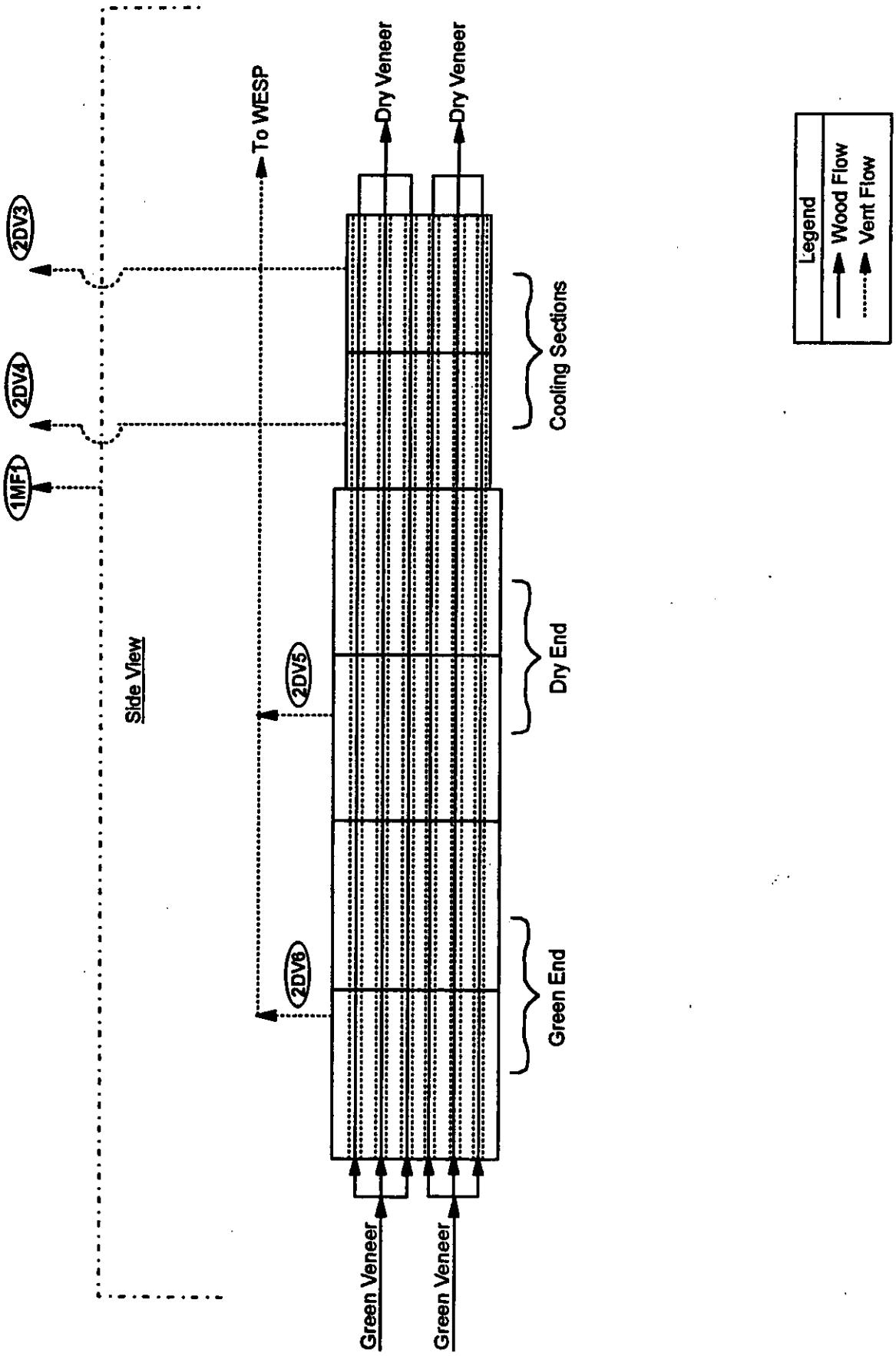

Figure 4.2.2 No. 2 Softwood Veneer Dryer, Mill 112

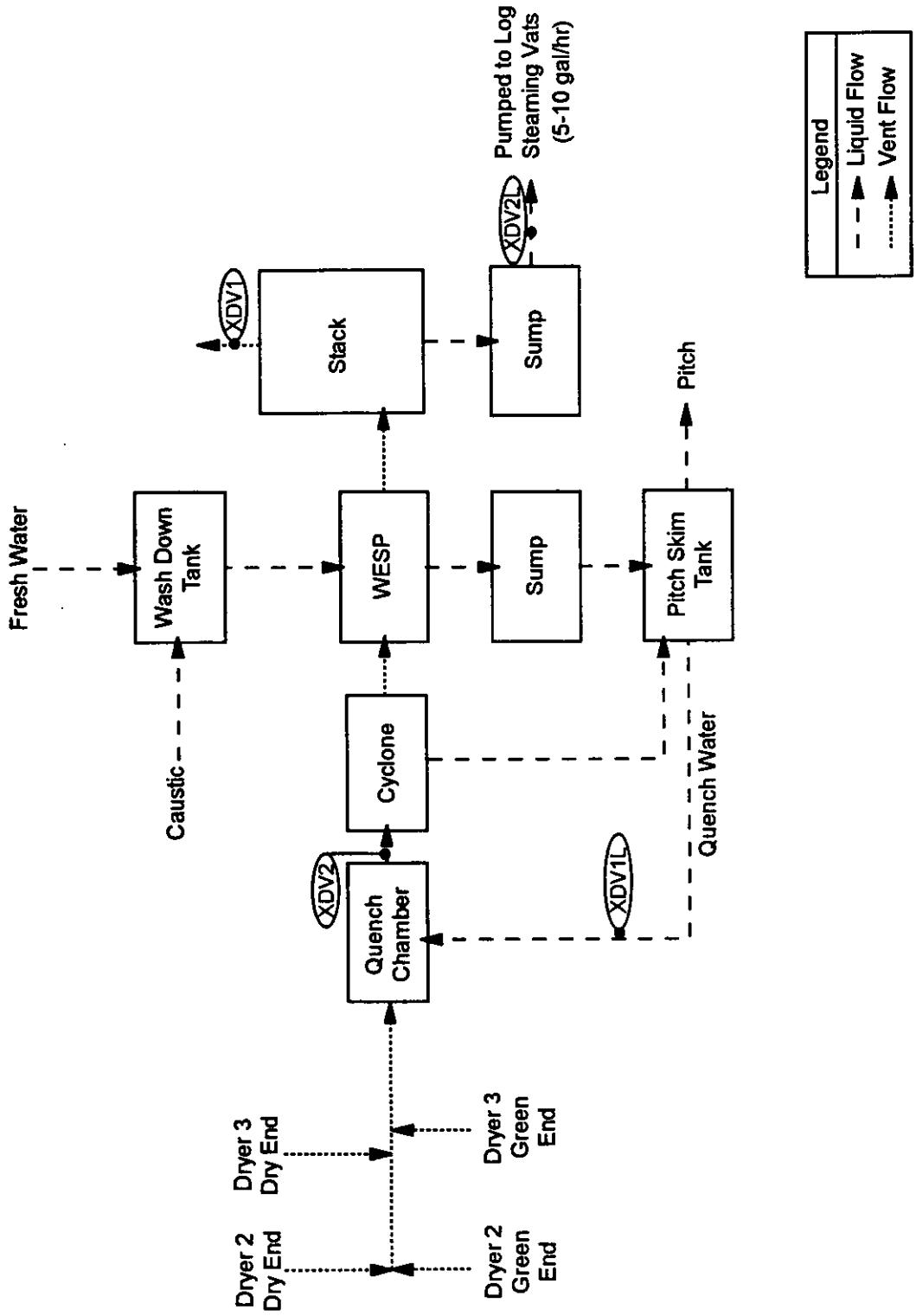

Figure 4.2.3 Wet Electrostatic Precipitator, Mill 112

Table 4.2.3. Process Operating Conditions During Testing of the Electrostatic Precipitator, Mill 112

Source ID	Run No.	Quench Chamber Inlet Temp., °F	Quench Chamber Outlet Temp., °F	Precipitator Voltage, kV	Precipitator Current, mA	DC Peak Voltage, kV	DC Mean Current, mA
XDV1, XDV2	1	238	128	35-45	50-200	50	155
	2	237	127	35-45	50-200	50	155
	3	236	129	35-45	50-200	50	155
	4	270	132	35-45	50-200	50	155
	5	272	132	35-45	50-200	50	155
	6	266	130	35-45	50-200	50	155

Table 4.2.4. Process Operating Conditions During Testing of the Softwood Veneer Dryers, Mill 112

Source ID	Run No.	Furnish	Production Rate, MSF as 3/8"/hr	Veneer Thickness	Target Redry, %**	Average Green End Temperature, °F		Average Dry End Temperature, °F	
						Dryer 2	Dryer 3	Dryer 2	Dryer 3
XDV1, XDV2	1	DF	26.3	1/6" (20%),	30	345	340	375	350
	2	DF	26.5	1/8" (80%)	30	335	340	380	350
	3	DF	26.2		30	335	340	375	350
	4	50/50 PP/DF	15.9	1/8"	30	340	335	375	350
	5	50/50 PP/DF	29.7	1/8"	30	335	335	375	350
	6	50/50 PP/DF	23.9	1/8"	30	340	340	380	350
2DV5, 2DV6	1	DF	9.0	1/6" (50%),	30	345	-	375	-
	2	DF	9.0	1/8" (50%)	30	335	-	380	-
	3	DF	8.7		30	335	-	375	-
	4	PP	7.9	1/8"	30	340	-	375	-
	5	PP	7.9	1/8"	30	335	-	375	-
	6	PP	8.5	1/8"	30	340	-	380	-
2DV3, 2DV4, 1MF1	1	50/50 PP/DF	8.0	1/8"	30	345	-	375	-
	2	50/50 PP/DF	1.5	1/8"	30	345	-	370	-
	3	50/50 PP/DF	8.8	1/8"	30	345	-	380	-

*PP = Ponderosa Pine; DF = Douglas Fir

**Drying operating parameters are adjusted so that approximately 30% of the veneer passing through the dryer need further drying (usually in the RF dryers). Redry is counted in production during its first pass through the dryer.

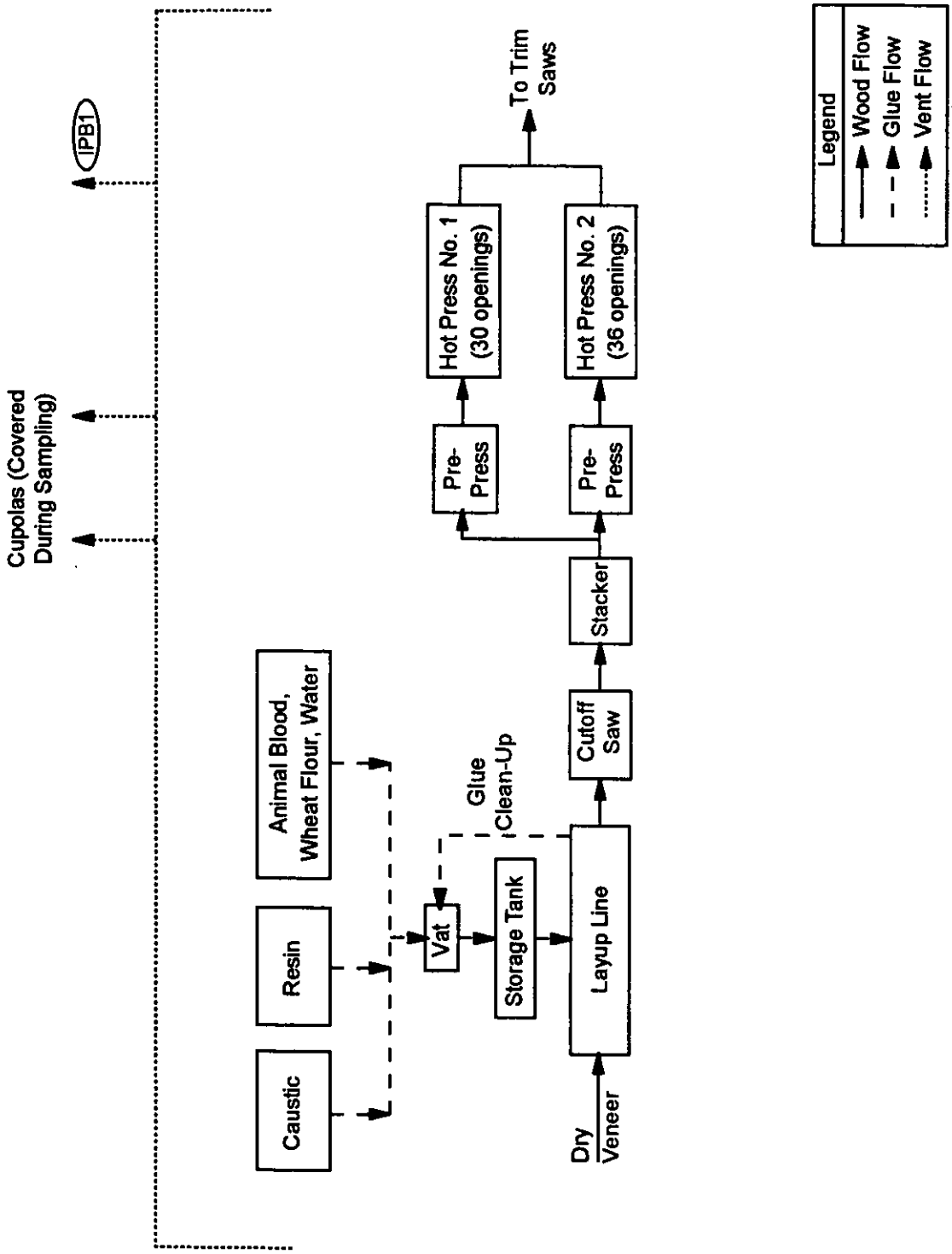

Figure 4.2.4 Hot Board Presses, Mill 112

to heat. Press temperatures, pressures and times vary with the type of plywood produced. Table 4.2.5 lists some press process operating conditions recorded during testing. Most visible emissions from the hot press area are produced when the presses open and unload the hot plywood sheets. At this facility, emissions from both presses rise to three roof vents; two cupolas (which did not have fans) and one fan-driven cylindrical vent (1PB1). During the testing of this unit, both cupolas were covered so that all emissions would be collected by source 1PB1.

4.2.3 *Radio Frequency Dryer, Mill 112*

Some green veneer does not dry sufficiently as it passes through the steam heated dryers at this facility. This veneer (termed redry) is stacked and either sent through the steam heated dryers again (at an elevated speed) or is fed to a Speco Model 300 radio frequency dryer. In radio frequency drying, a stack of redry is conveyed into the dryer, the doors are closed and a platen descends onto the stack. Microwave energy is applied, causing the water molecules in the wood to oscillate and the stack to heat. The platen rises at a predetermined point, the doors open, and the stack of veneer emerges. Although little or no moisture is removed, the microwave dryer serves to equilibrate moisture in the wood and renders the veneer usable for plywood production. Non-contact steam heat is employed to keep the RF dryer temperature at ~200°F. This helps minimize sparking. The radio frequency dryer at this mill had a single outlet vent (1DM1) and was tested while processing stacks of incompletely dried Douglas-fir. The basic arrangement of this dryer is illustrated in Figure 4.2.5. Process operating conditions are detailed in Table 4.2.6.

4.2.4 *Log Steaming Vat, Mill 112*

Logs are debarked, cut to length and loaded into one of nine drive-in log steaming vats. Each of these vats has a capacity of approximately 85 MSF (3/8" basis), and one vat is opened every 3 hours. As water sprays and live steam are added to the vats, the log blocks slowly heat to the desired peeling temperature (approximately 110°F). When this point is reached, a damper is opened, and a fan is used to begin ventilating the vat. When adequate steam has been removed, the vat door is opened, and the hot log blocks are removed.

All nine vats are connected to a single powered vent, and the damper opening is timed so that a continuous draft is applied to the vat during the time period it is open. This vent was tested during this study and is designated as source 1ML1. The log steaming vats are diagrammed in Figure 4.2.6, and process operating conditions are listed in Table 4.2.7. Samples of the shower water for the log steaming vats were collected in conjunction with this testing. This sampling location is designated as 1ML1L.

Table 4.2.5. Process Operating Conditions During Testing of the Softwood Hot Presses, Mill 112

Source ID	Run No.	Production Rate, MSF 3/8"/hr	No. of Plies	Board Thickness, inches	Furnish (Face/Core)*	Resin Type**	Resin Solids Content of Glue, %	No. of Glue Lines	Press Temperature, °F	Press Time, min	Press Pressure, psi
1PB1	1	26.4	4	15/32	DF/PP	PF	26	3	290	3-5	175-190
	2	26.4	4	15/32	DF	PF	26	3	290	3-5	175-190
	3	26.4	4	15/32	DF	PF	26	3	290	3-5	175-190

*PP = Ponderosa Pine, DF = Douglas Fir

**PF = phenol - formaldehyde, <0.1% free formaldehyde

***No catalysts, waxes or scavengers are used.

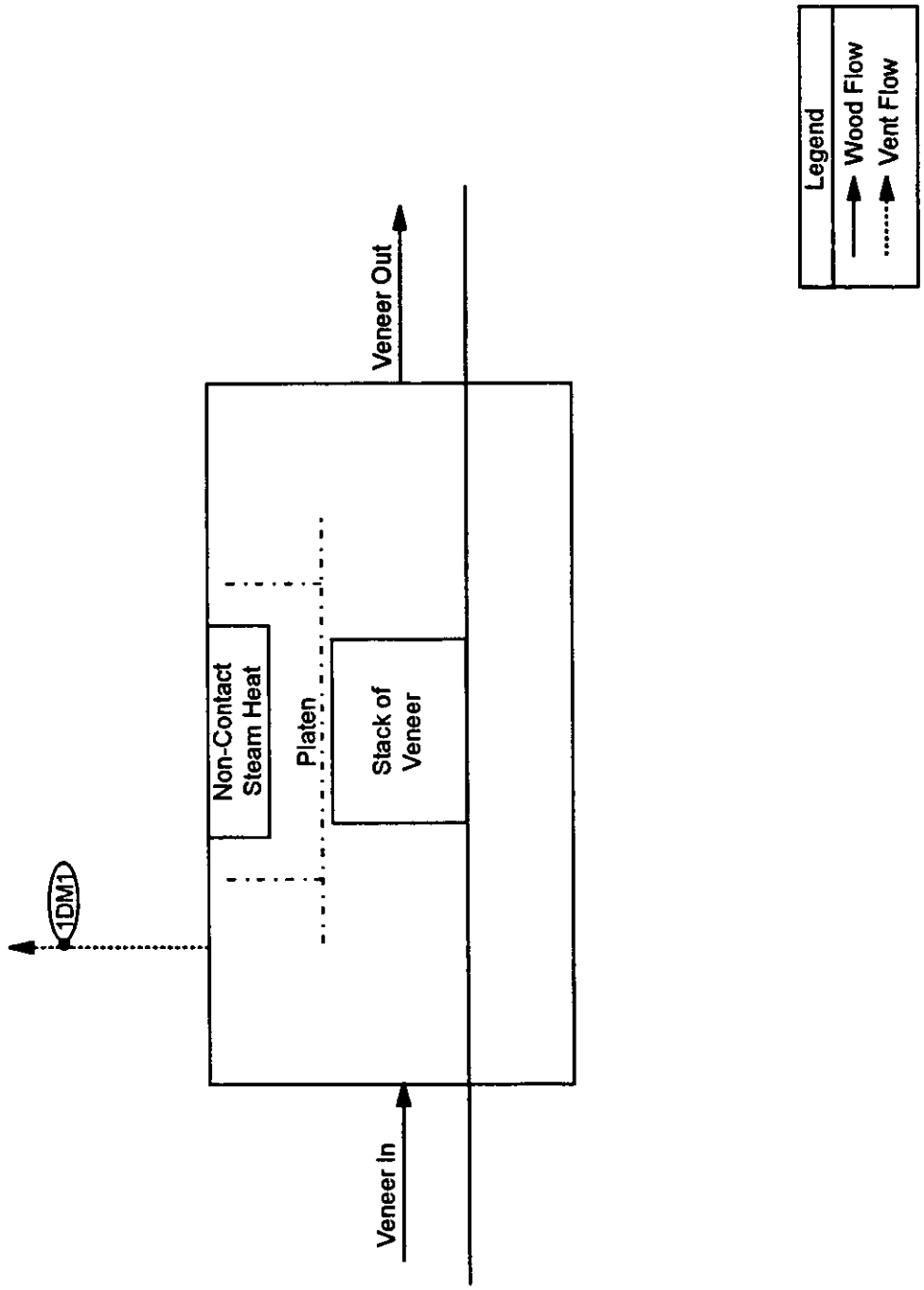

Figure 4.2.5 Radio Frequency Dryer, Mill 112

Table 4.2.6. Process Operating Conditions During Testing of the Softwood Radio Frequency Dryer, Mill 112

Source ID	Run No.	Furnish	Production Rate, MSF as 3/8" hr	Veneer Thickness, inches	Average Dryer Temperature, °F
1DM1	1	Douglas-fir	13.3	1/8	215
	2	Douglas-fir	13.3	1/10	215
	3	Douglas-fir	11.1	1/10	215

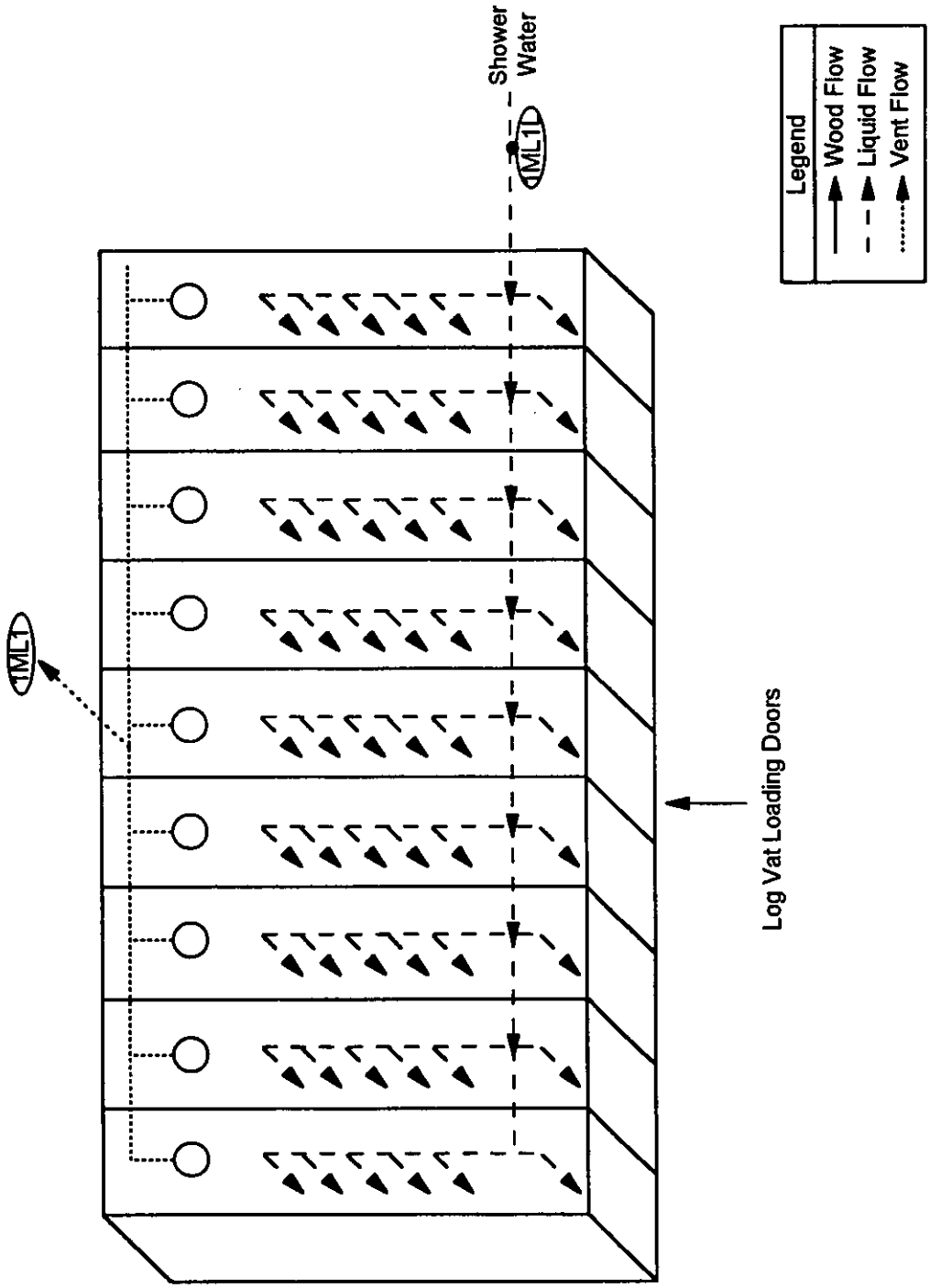

Figure 4.2.6 Log Steaming Vats, Mill 112

Table 4.2.7. Process Operating Conditions During Testing of the Softwood Log Steaming Vat, Mill 112

Source ID	Run No.	Furnish*	Vat Production Rate, MSF as 3/8" hr**	Estimated Shower Water to All 8 Closed Vats, GPM	Log Holding Time in Vat, hours	Vat Temperature, °F
1 ML1	1	DF	28.3	280	27	150
	2	DF	28.3	280	27	150
	3	L	28.3	280	27	150

*DF = Douglas-fir, L = Larch

**Actual volume of wood removed from vat per hour

4.3 Process Description and Test Program, Mill 115

Figure 4.3.1 is a schematic representation of the process flow at Mill 115. This mill is located in the northwestern United States and budgets production of approximately 150 million ft^2/year (3/8" basis) of industrial and marine grade softwood plywood. This plywood has between 3 and 7 plies and ranges in thickness from 1/4" to 1 1/4". True fir species (which are often termed white fir) and hemlock are approximately 70% of the furnish at this facility. Douglas-fir (often termed red fir) and larch comprise the remaining 30%.

Logs are stored in the log yard prior to debarking and steaming. In the summertime, water sprays are employed to minimize checking. After debarking, the logs are cut to length and loaded into one of 12 drive-in log steaming vats. Each of these vats has a capacity of approximately 80 MSF (3/8" basis), and one vat is opened every 2 1/2 - 3 1/2 hours. As warm water sprays are added to the vats, the log blocks slowly heat to a temperature slightly above the desired peeling temperature (approximately 110°F). Once they are removed from the vats, the preheated blocks are placed in bins which feed a single rotary peeler or lathe. The resulting green veneer is clipped, sorted and stacked. Green wood residue is chipped and screened. The chips are sold to a paper mill and the fines are burned in the power boiler. The resulting stacks of green veneer are transported to one of three dryers. These dryers are multiple deck, steam heated, two zone jet dryers in which air is circulated perpendicular to the direction of veneer flow. No zone-to-zone air recirculation is practiced.

Individual sheets of veneer are transported into the first zone of the veneer dryer, which is primarily intended to bring the sheets to a fixed temperature. These hot sheets then pass into the second zone of the dryer, which functions to reduce the moisture in the veneer sheets to 6-8% (dry basis). The dried sheets are conveyed through veneer cooling sections, which function to equilibrate the moisture and temperature in the wood. As the sheets emerge from the veneer cooling sections, they are sorted and stacked. Veneer which does not dry sufficiently to be used in plywood construction is marked as it exits the dryer and is set aside as "redry." At this facility, the moisture content of redry is reduced by passing it through one of the veneer dryers at an elevated speed. For the purposes of this study, redry production is counted during its first pass through the dryer. Vent emissions from the heated zones of the three veneer dryers at this facility are collected and fed to a wet electrostatic precipitator (WESP).

Stacks of dried veneer are transported to a single lay-up line, where plywood sheets are assembled (from alternating layers of veneer and glue) and trimmed. The stacks of glued sheets are conveyed to one of two press lines, where a prepress compresses the stack for a time period sufficient to allow the glued veneer sheets to adhere to one another. The resulting stacks of plywood sheets are conveyed to a hot press, where the sheets are individually fed into the loader. These sheets are conveyed into the open press, which closes after the loading is complete. When the hot press opens, a load of hot plywood sheets is conveyed to the unloader and the press is reloaded. The stack of unloaded sheets is moved to finishing, where the sheets are individually trimmed to size, patched, sanded, and packaged for transport.

Table 4.3.1 summarizes the emission test program at Mill 115, including process units tested, sources associated with each unit, sampling and analytical procedures used, and the test schedule. Table 4.3.2 summarizes the process liquid test program.

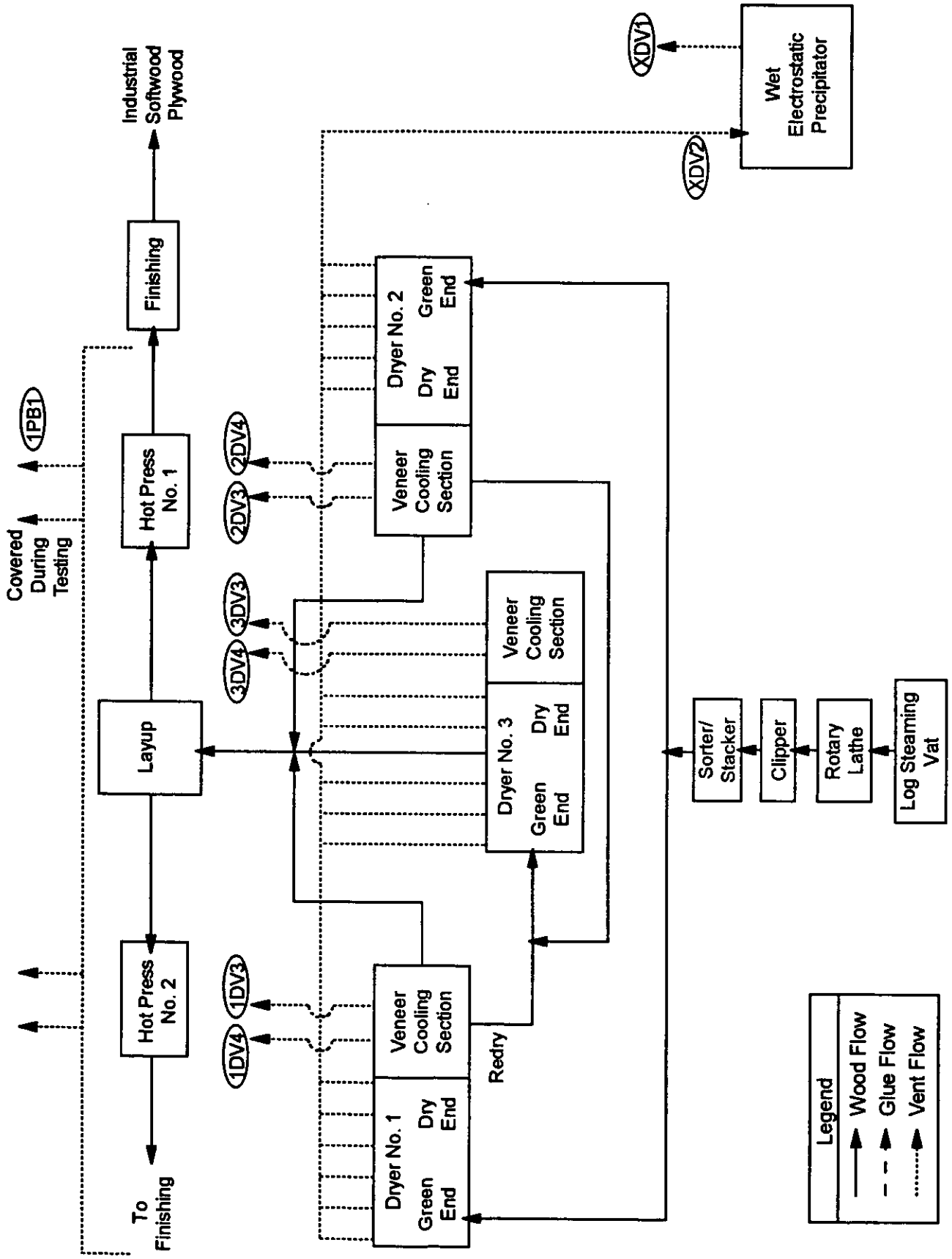

Figure 4.3.1 Overall Process Flow Diagram, Mill 115

Table 4.3.1. Emission Test Program, Mill 115

Unit	Source Code	Source Description	Emission Testing Procedure*			Test Schedule		
			NICM	CO	M25A	Run	Date	Time
Softwood Veneer Dryer	XDV1	WESP Exhaust	X		X	1	7/24/97	1208-1308
			X		X	2	7/24/97	1445-1545
			X		X	3	7/24/97	1651-1751
	XDV2	Combined Dryer Exhaust at Inlet to ESP	X		X	1	7/24/97	1208-1308
			X		X	2	7/24/97	1445-1545
			X		X	3	7/24/97	1651-1751
	1DV4	Dryer No. 1, Veneer Cooling Section Exhaust No. 2	X		X	1	7/22/97	1400-1500
			X		X	2	7/22/97	1615-1715
			X		X	3	7/22/97	1812-1912
	1DV3	Dryer No. 1, Veneer Cooling Section Exhaust No. 1	X			1	7/23/97	1135-1235
			X			2	7/23/97	1332-1432
			X			3	7/23/97	1550-1646
	2DV4	Dryer No. 2, Veneer Cooling Section Exhaust No. 2	X			1	7/22/97	1400-1500
			X			2	7/22/97	1615-1715
			X			3	7/22/97	1812-1912
	2DV3	Dryer No. 2, Veneer Cooling Section Exhaust No. 1	X		X	1	7/23/97	1135-1235
			X		X	2	7/23/97	1332-1432
			X			3	7/23/97	1550-1647
	3DV4	Dryer No. 3, Veneer Cooling Section Exhaust No. 2	X			1	7/22/97	1400-1500
			X			2	7/22/97	1615-1715
			X			3	7/22/97	1812-1912
	3DV3	Dryer No. 3, Veneer Cooling Section Exhaust No. 1	X			1	7/24/97	1016-1116
			X			2	7/24/97	1237-1337
			X			3	7/24/97	1447-1547
Softwood Plywood Hot Presses	1PB1	Powered Vent Above No. 1 Board Press	X			1	7/23/97	1153-1253
			X			2	7/23/97	1340-1440
			X		X	3	723/97	1550-1650

*NICM: NCASI Impinger/Canister Method; CO: Bacharach Combustion Analysis; M25A: Modified Method 25A (Total Hydrocarbon Analyzer)

Table 4.3.2. Process Liquid Test Program, Mill 115

Unit	Source Code	Source Description	Liquid Sample Testing Procedure	Test Schedule		
			GC/FID	Run	Date	Time
Softwood Veneer Dryer	XDV1L	WESP Quench Water	X	1	7/24/97	1230
			X	2	7/24/97	1500
			X	3	7/24/97	1730

4.3.1 *Softwood Veneer Dryers, Mill 115*

The three veneer dryers at this facility are diagrammed in Figure 4.3.2. Each of these dryers is a jet dryer which has four decks and utilizes indirect steam heat. A jet dryer is a cross-circulation dryer which circulates air through a heat exchanger in the top of the dryer and forces that heated air down into jet tubes. Flow from these jet tubes passes out through impingements perpendicular to the surface of the veneer passing through the dryer. Zone-to-zone air recirculation is not practiced in these dryers. Dryers no. 1 and no. 2 are tied to a single, dry veneer handling system. Dryer no. 3, which has its own veneer sorting and stacking system, alternately processes redry (veneer which was inadequately dried during its first pass through a dryer) and green veneer. Dryer no. 1 has six heated zones, each of which is vented to the WESP, and one cooling zone, which has two vents to the atmosphere. Dryers no. 2 and no. 3 have five heated zones and one cooling zone each. As with dryer no. 1, the heated zones are individually vented to the WESP, and the cooling zones have two vents to the atmosphere. The heated zone vents from each dryer are connected to a common header.

The headers from all three dryers join, and this common vent serves as an inlet duct for a Geoenergy e-tube type WESP. This precipitator is diagrammed in Figure 4.3.3. Quench sprays are employed (beginning in the dryer headers) to cool the gas stream to adiabatic saturation conditions before it reaches the WESP. The large droplets from the quench sprays and large particulates are removed in a cyclone, the effluent from which is fed to the skimmer tank. The gas stream exiting from the cyclone passes through plates to ensure uniform distribution of airflow to the e-tubes, which contain electrode discs on wires. Entrained fine mist droplets are forced to the tube walls as they pass down past the first disc in the tube, thus creating a continuously wetted tube surface. As the gas stream moves down the tube past other electrode discs, fine particulates are forced to the tube walls and picked up by the water on the surface, which drains to the ESP sump.

Every two hours, approximately 400 gal of fresh water is used to wash down the tube walls. This water also drains to the ESP sump. The ESP sump contents are pumped to a skimmer tank, where pitch is removed, and the skimmed water is recycled to the quench sprays. Pitch is the term commonly applied to the gummy, non-water soluble natural components evaporated from the veneer at dryer temperatures which condense at the lower temperatures in the WESP. Once per 8 hour shift, caustic is added to the water used for this washdown. This keeps the pH in the skimmer tank high enough to cause the pitch to float. The water recycle system on this precipitator is designed to balance the water evaporated with water added in washing, and does not normally produce an effluent. Samples of the quench water (XDV1L) were collected in conjunction with the vent testing at this mill. Table 4.3.3 lists the WESP operating conditions recorded during testing.

Eight sampling points were selected to characterize emissions from the veneer drying process. Three of the board cooling section exhausts from the veneer dryers (1DV3, 2DV3 and 3DV3) were simultaneously tested on one day, and the other three board cooling section exhausts (1DV4, 2DV4 and 3DV4) were tested on another day. On a third day, the inlet and outlet of the WESP (XDV2 and XDV1, respectively) were tested simultaneously. Each test consisted of three runs. Because the configuration of the WESP inlet made accurate flow rate measurements impossible, the outlet flows were used to calculate the emission rates. Table 4.3.4 lists the process operating conditions recorded during the testing of this unit.

4.3.2 *Softwood Plywood Hot press, Mill 115*

The lay-up line and hot press area at this mill are illustrated in Figure 4.3.4. A face sheet of dried veneer is placed on a moving belt, alternating layers of glue and veneer are laid upon that, and

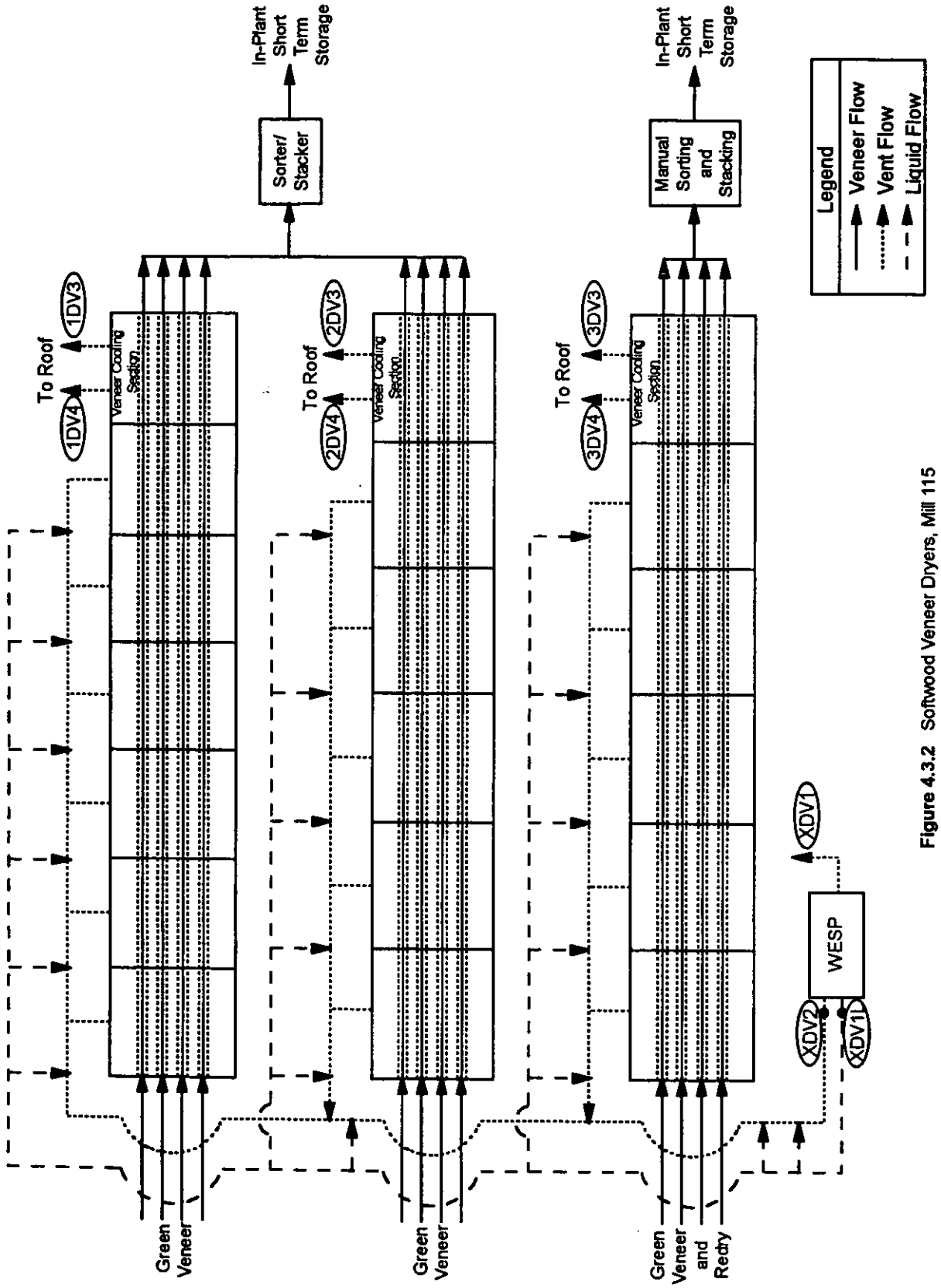

Figure 4.3.2 Softwood Veneer Dryers, Mill 115

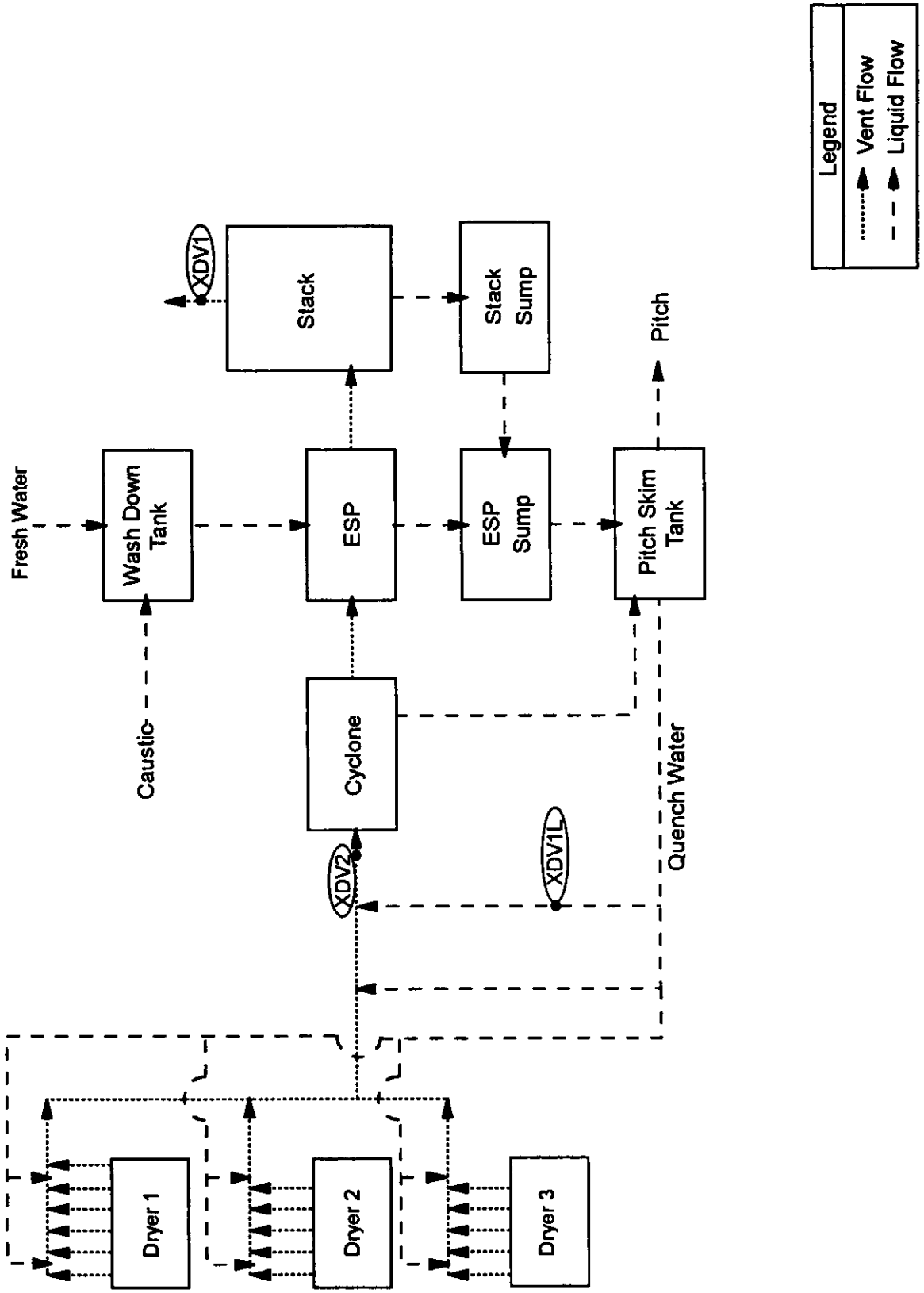

Figure 4.3.3 Wet Electrostatic Precipitator, Mill 115

Table 4.3.3. Process Operating Conditions During Testing of the Electrostatic Precipitator, Mill 115

Source ID	Run No.	Quench Chamber Temp., °F			Quench Chamber Outlet Temp., °F	WESP ID Fan Outlet Temp., °F	NE Transformer/ Rectifier Voltage, kV	NE Transformer/ Rectifier Current, mA	SW Transformer/ Rectifier Voltage, kV	SW Transformer/ Rectifier Current, mA
		Inlet 1	Inlet 2	Inlet 3						
XDV1, XDV2	1	162	162	153	160	165	45-55	200-310	46-54	190-320
	2	161	164	151	160	163	45-55	200-310	46-54	190-320
	3	158	163	150	157	161	45-55	200-310	46-54	190-320

Table 4.3.4. Process Operating Conditions During Testing of Softwood Veneer Dryers, Mill 115

Source ID	Run No.	Furnish	Production Rate, MSF as 3/8"/hr	Veneer Thickness	Moisture Meter Target Limits, Upper/Lower (%)			Average Zone 1 Dryer Temperature, °F			Average Redry per Shift, %
					Dryer 1	Dryer 2	Dryer 3	Dryer 1	Dryer 2	Dryer 3	
XDV1, XDV2	1	DF	18.6	1/10"	24/15	10/4.5	22/15	350	375	379	14.4
	2	WF	18.6	1/8"	22/15	10/3	22/15	339	377	370	18.2
	3	WF	16.9	1/8"	22/15	10/3	22/15	332	373	368	18.2
1DV3	1	DF	7.1	1/10"	NR	NA	NA	358	NA	NA	18.1
	2	DF	7.1	1/10"	NR	NA	NA	367	NA	NA	18.1
	3	DF	8.2	1/10"	NR	NA	NA	359	NA	NA	13.1
2DV3	1	DF	7.1	1/10"	NA	NR	NA	NA	372	NA	18.1
	2	DF	7.1	1/10"	NA	NR	NA	NA	NR	NA	18.1
	3	DF	8.2	1/10"	NA	NR	NA	NA	381	NA	13.1
3DV3	1	S	3.7	1/6"	NA	NA	22/15	NA	NA	379	14.4
	2	WF	3.7	1/8"	NA	NA	22/15	NA	NA	375	14.4
	3	WF	3.7	1/8"	NA	NA	22/15	NA	NA	370	14.4
1DV4	1	WF	7.5	1/6"	30/15	NA	NA	340	NA	NA	12.7
	2	DF	7.2	1/10"	30/15	NA	NA	348	NA	NA	13.8
	3	DF	7.2	1/10"	30/15	NA	NA	345	NA	NA	13.8
2DV4	1	WF	7.5	1/6"	NA	10/4	NA	NA	370	NA	12.7
	2	DF	7.2	1/10"	NA	10/4	NA	NA	376	NA	13.8
	3	DF	7.2	1/10"	NA	10/4	NA	NA	384	NA	13.8
3DV4	1	DF	3.8	1/10"	NA	NA	24/15	NA	NA	376	12.7
	2	WF	3.6	1/8"	NA	NA	24/15	NA	NA	374	13.8
	3	WF	3.6	1/8"	NA	NA	24/15	NA	NA	376	13.8

WF = White Fir, DF = Douglas Fir, S = Spruce
NA = not applicable, NR = not recorded

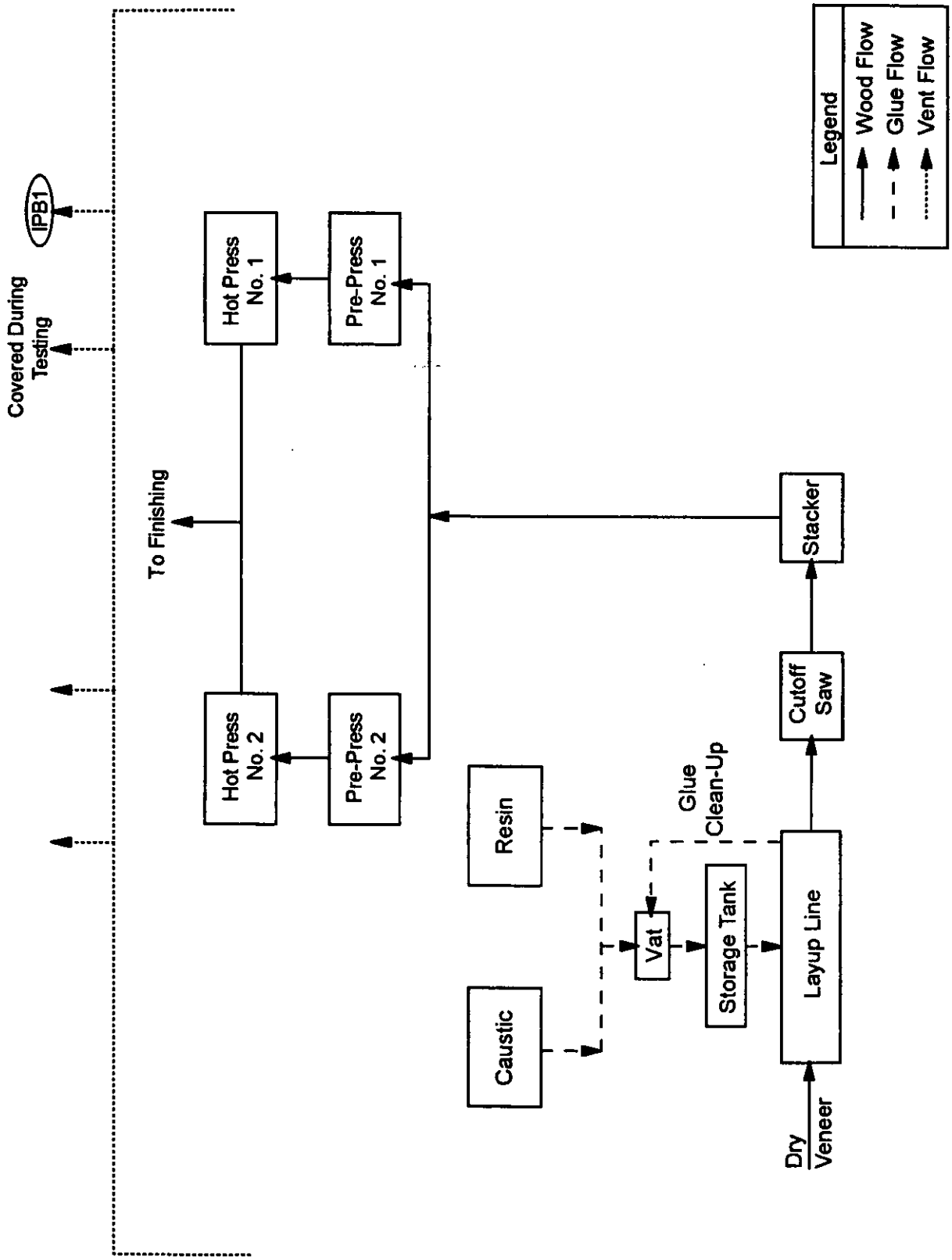

Figure 4.3.4 Hot Board Presses, Mill 115

a final face sheet is placed on top. These partially bonded plywood sheets are trimmed, stacked 32 sheets high, and then conveyed to one of two identical Fjellman presses. The stacks of plywood are compressed in a prepress at 3200 psi (hydraulic pressure) for 6 minutes to bond the layers of veneer together. Plywood sheets are individually loaded into the hot press loader and subsequently fed into the hot press, which closes and begins to heat. Press temperatures, pressures and times vary with type of plywood produced. Indirect steam is used to provide heat for the presses. Table 4.3.5 lists the press process operating conditions recorded during testing. Most visible emissions from the hot press area are produced when the presses open and unload the hot plywood sheets. At this facility, emissions from hot press no. 1 were measured. These emissions rise to two roof vents. One of these is a cupola (which does not have a fan), and the other is a fan-powered cylindrical vent (1PB1). During the testing of this unit, the cupola was covered so that all emissions were collected by source 1PB1.

Table 4.3.5. Process Operating Conditions During Testing of Softwood Hot Presses, Mill 115

Source ID	Run No.	Production Rate, MSF 3/8"/hr	No. of Plies	Board Thickness, inches	Furnish (Face/Core)*	Resin Type**	Resin Solids Content of Glue, %	No. of Glue Lines	Press Temp., °F	Press Time, min
1PB1	1	15.7	5	19/32	DF/L	PF	28	4	290	5-8
	2	14.5	7	23/32	DF	PF	28	6	290	5-8
	3	14.7	7	23/32	DF	PF	28	6	290	5-8

*PP = Ponderosa Pine, DF = Douglas Fir, L = Larch

**PF = Phenol Formaldehyde, <0.1% Free Formaldehyde

***No catalysts, waxes, or scavengers are used.

4.4 Process Description and Test Program, Mill 155

Figure 4.4.1 is a schematic representation of the process flow at Mill 155. This mill is located in the northwestern United States and produces approximately 130 million ft^2/year (3/8" basis) of hardwood plywood. The softwood veneer used for core material is peeled off-site and dried on-site. Dry hardwood veneer (oak, birch, maple or alder) is purchased for use as plywood faces. The plywood produced varies in thickness, number of plies, and face species, depending on the requirements of the customer. The primary species used for core veneer are white fir (80-90%) and Douglas-fir (10-20%).

Pallets of green softwood veneer sheets are shipped to this facility and stored prior to use. This veneer is fed to one of three veneer dryers. Dryers no. 1 and no. 2 are three zone, four deck, steam heated, cross-circulation jet dryers. Dryer no. 3 is a two zone, six deck, steam heated, longitudinal flow dryer. Individual sheets of veneer are transported into the first zone of each veneer dryer, which is intended primarily to bring the sheets to a fixed temperature. These hot sheets then pass into the second and third (in the case of dryers 1 and 2) dryer zones, which function to reduce the moisture in the veneer sheets to the target moisture content of 8-12% (dry basis). The dried sheets then pass through a veneer cooling section, which functions to equilibrate the moisture and temperature in the wood. As the sheets emerge from the veneer cooling section, they are manually sorted and stacked. Veneer which does not dry sufficiently to be used in plywood construction is marked as it exits the dryer and is set aside as "redry." At this facility, the moisture content of redry is reduced by passing it through one of the veneer dryers at an elevated speed. For the purposes of this study, redry production is counted during its first pass through the dryer. Vent emissions from the heated zones of the three veneer dryers are collected and fed to an Electrified Filter Bed (EFB), which serves to remove particulate matter from the flue gases.

The stacks of dried softwood veneer are transported to one of two manual layup lines. Each of these lines consists of a composer and two glue spreaders and is located next to a hot press. Glue is spread on the back of a sheet of purchased dry hardwood veneer. Sheets of dry softwood veneer are then placed on top of the hardwood face sheet, with glue between each veneer sheet. Another hardwood face veneer sheet is then laid on top. A stack of thirty plywood sheets is assembled in this manner. The stacks of glued plywood sheets are then conveyed to one of the two presses, where a prepress compresses the stack for a sufficient time period to allow the glued veneer sheets to adhere to one another. The resulting stacks of plywood sheets then move to a hot press, where sheets are individually fed into the loader. These sheets then pass into the open press, which subsequently closes. When the hot press opens, a load of hot plywood sheets passes to the unloader and new plywood sheets are loaded. The stack of unloaded plywood is moved to finishing, where the sheets are individually trimmed to size, patched, sanded, and packaged for transport.

Table 4.4.1 summarizes the test plan at Mill 155, including process units tested, sources associated with each unit, sampling and analytical procedures used, and the test schedule. Since there was very little liquid flow from the EFB drain, it was not possible to collect an adequate liquid sample for analysis.

4.4.1 *Softwood Veneer Dryers, Mill 155*

The three veneer dryers at this facility are diagrammed in Figure 4.4.2. All three of the dryers were manufactured by Coe. Dryers no. 1 and no. 2 are three zone, four deck, steam heated, cross-circulation jet dryers. A jet dryer is a cross-circulation dryer which circulates air through a heat exchanger in the top of the dryer and forces that heated air down into jet tubes. Flow from these jet

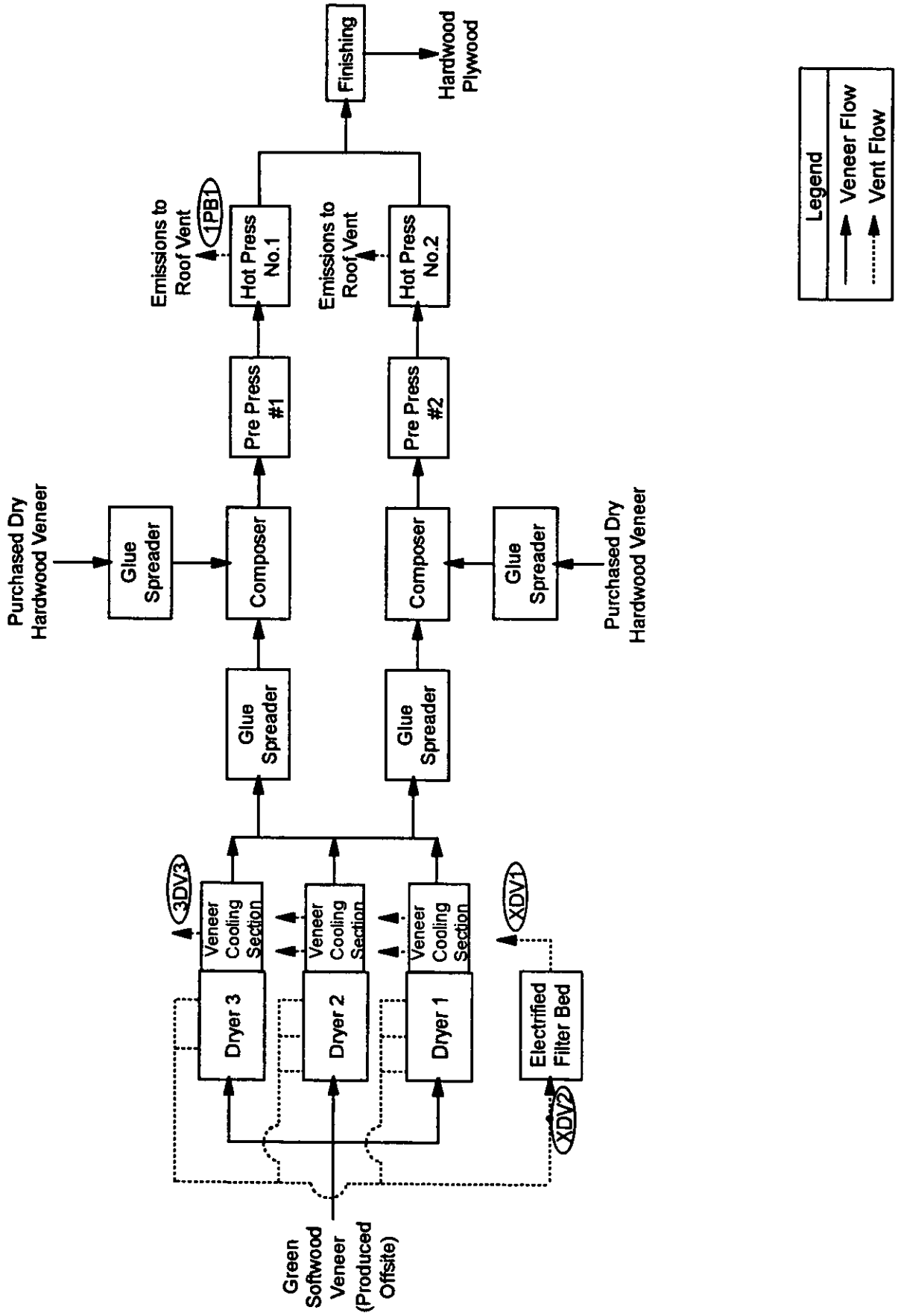

Figure 4.4.1 Overall Process Flow Diagram, Mill 155

Table 4.4.1. Emission Test Program, Mill 155

Unit	Source Code	Source Description	Emission Testing Procedure*			Test Schedule		
			NICM	CO	M25A	Run	Date	Time
Softwood Veneer Dryer	XDV1	EFB Exhaust	X		X	1	9/16/97	1635-1735
			X		X	2	9/17/97	0955-1055
			X		X	3	9/17/97	1230-1330
	XDV2	Combined Veneer Dryer Exhaust at Inlet to EFB	X		X	1	9/16/97	1635-1735
			X		X	2	9/17/97	0955-1055
			X		X	3	9/17/97	1230-1330
	3DV3	Dryer No. 3, Veneer Cooling Section Exhaust	X			1	9/16/97	1635-1735
			X			2	9/17/97	0955-1055
			X			3	9/17/97	1230-1330
Hardwood Plywood Hot Press	1PB1	Powered Vent Over No. 1 Board Press	X		X	1	9/18/97	1051-1151
			X		X	2	9/18/97	1325-1425
			X		X	3	9/18/97	1540-1640

*NICM: NCASI Impinger/Canister Method; CO: Bacharach Combustion Analysis; M25A: Modified Method 25A (Total Hydrocarbon Analyzer)

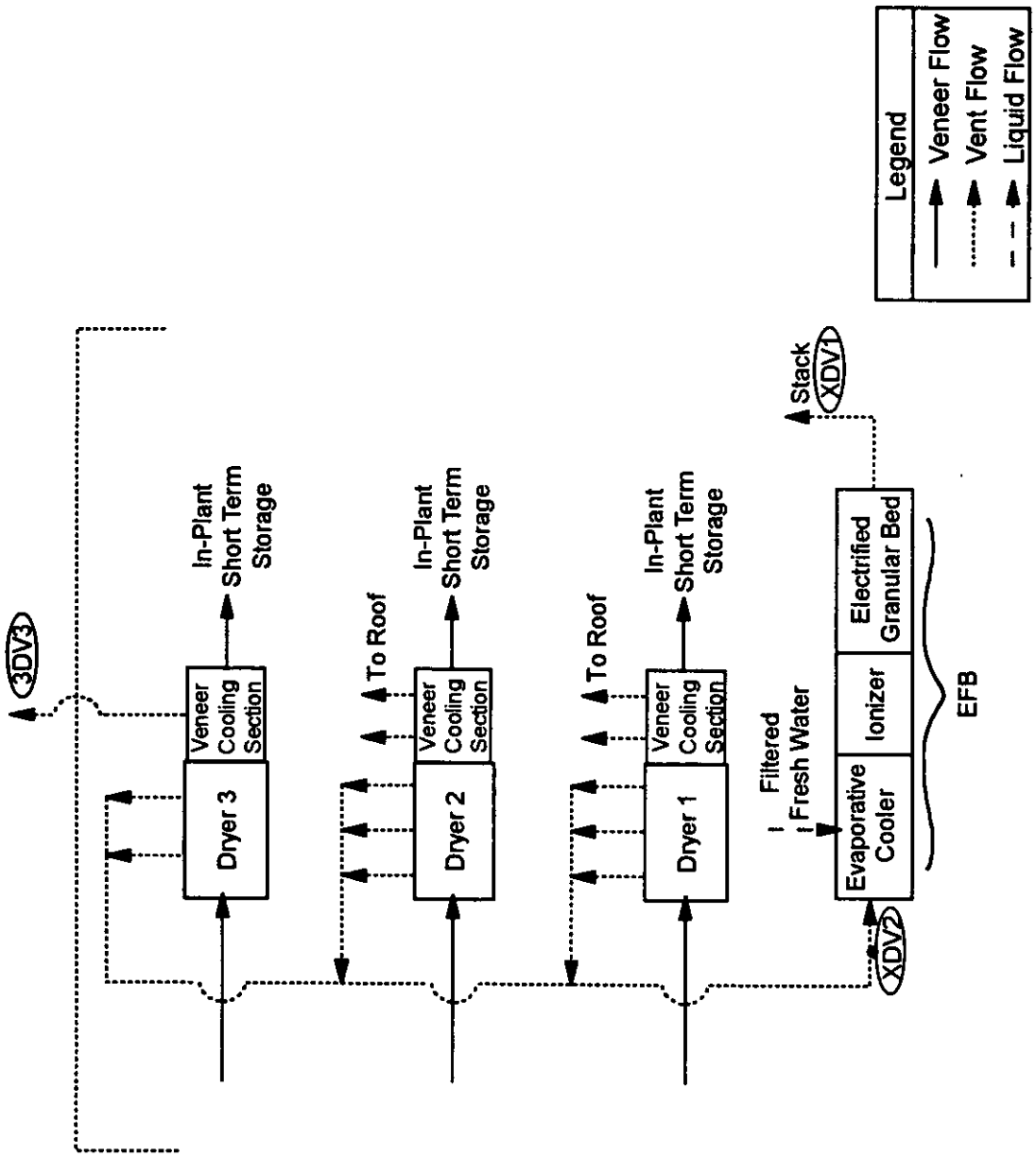

Figure 4.4.2 Softwood Veneer Dryers, Mill 155

tubes exits through openings perpendicular to the surface of the veneer passing through the dryer. Dryer no. 3 is a two zone, six deck, steam heated, longitudinal flow dryer. Zone to zone air recirculation is not practiced in any of these dryers. Dryers no. 1 and no. 2 have one vent from each heated zone and two vents each from their respective veneer cooling sections. Dryer no. 3 has one vent from each heated zone (two total) and one vent from the veneer cooling section. All eight vents from the heated zones of these dryers connect to a common header, which serves as an inlet for the EFB (XDV2). All five veneer cooling section exhausts vent to the atmosphere. The single veneer cooling section exhaust for veneer dryer no. 3 (3DV3) was tested during this study.

The EFB is diagrammed in Figure 4.4.3. Combined exhaust gases from the veneer dryer vents pass into an evaporative cooler, where high pressure atomization nozzles spray fine water droplets (from a fresh water source), to cool the hot dryer gases. The drop in temperature condenses the high molecular weight VOCs into very fine droplets. These are carried by the gas stream into an ionizer, where they develop an electrical charge. The gas stream then passes into the EFB collector, which is a bed of pea gravel between an inner louver cylinder and an outer perforated cylinder. An electrode is immersed in the gravel bed, creating an electric field between the electrode and the grounded retaining structure. This creates caps of electrical charge on the bed granules, attracting the charged particulate matter from the gas stream. Liquid and particulate matter build up on the surface of the gravel and drain to the bottom of the unit. In this installation, just enough fresh water is added to the system to balance the evaporative water losses. Pitch (gummy, non-water soluble natural VOC components evaporated from the veneer at dryer temperatures which later condense at the lower temperatures of the WESP) collects on the gravel bed and slowly increases the pressure drop across the bed. When this pressure drop reaches a level which would compromise EFB performance, the gravel is replaced. Gases exit the EFB collector to the stack (XDV1). The inlet and outlet of the EFB (XDV2 and XDV1, respectively) were tested simultaneously during this study. Each test consisted of three runs. Table 4.4.2 lists the veneer dryer process operating conditions recorded during the testing of this unit, and Table 4.4.3 lists the EFB operating parameters. Some difficulties were encountered in measuring vent flow rates for the EFB, resulting in the use of an average flow rate for all three runs at both the EFB inlet and outlet.

4.4.2 *Hardwood Plywood Hot Press, Mill 155*

The layup and hot press areas of this mill are illustrated in Figure 4.4.4. One composer is located next to each of the two 30-opening hot presses, both of which were manufactured by Williams-White. Each composer has 2 glue spreaders, one for the softwood core veneer and one for the hardwood skins. Once the stacks of plywood have been manually assembled on the composers, they are compressed in a prepress at 1500 psi (hydraulic pressure) for several minutes to bond the layers of veneer together. The partially bonded plywood sheets are then individually loaded into the hot press loader and fed into the hot press, which closes and begins to heat. Press temperatures, pressures and times vary with type of plywood produced. Table 4.4.4 lists the press process operating conditions recorded during testing. Most of the visible emissions from the hot press area occur when the presses open and unload the hot plywood sheets. During this study, emissions from hot press no. 1 were measured. These emissions were sampled from a single powered vent (1PB1) located directly over the press.

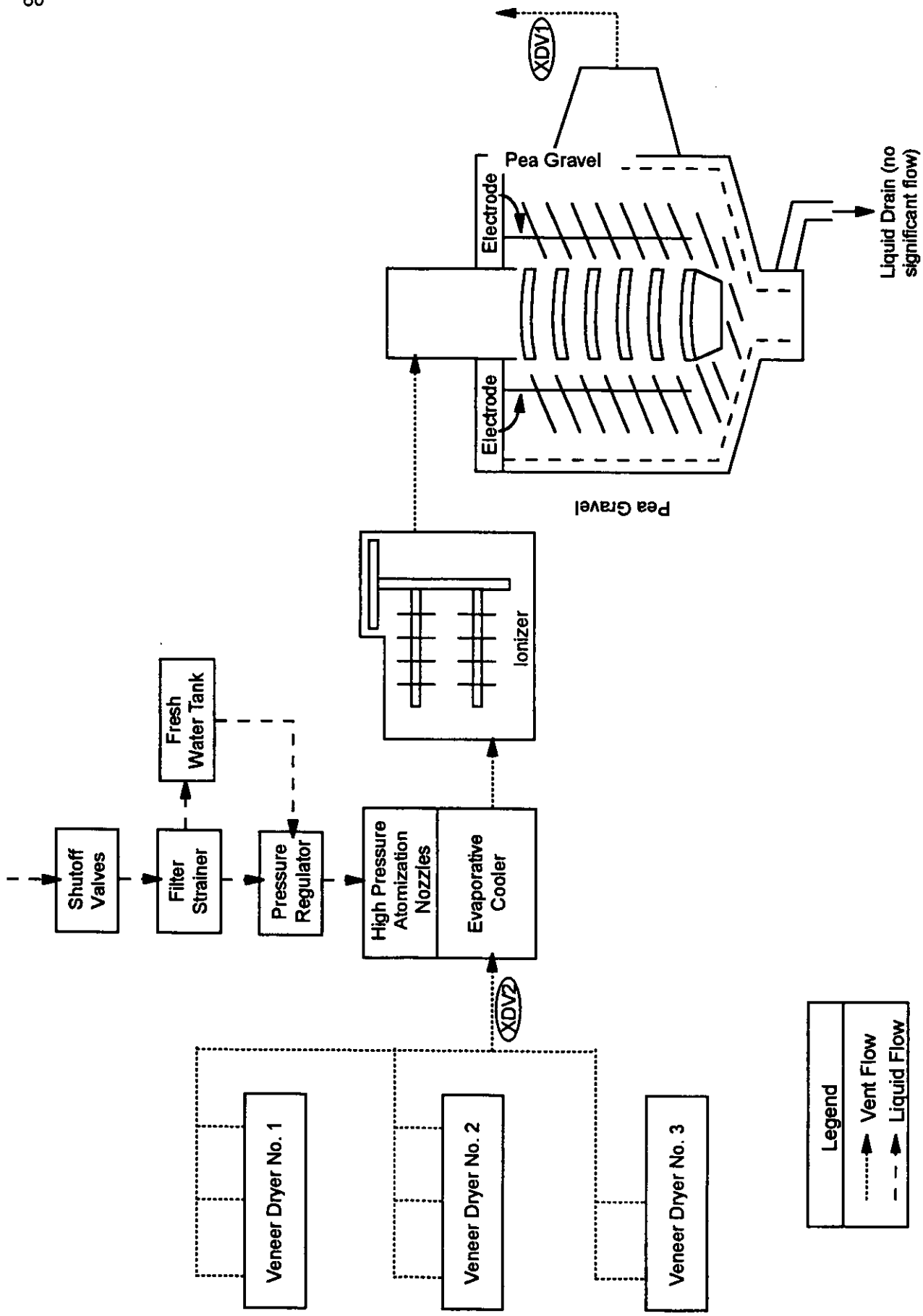

Figure 4.4.3 Electrified Filter Bed (EFB), Mill 155

Table 4.4.2. Process Operating Conditions During Testing of the Softwood Veneer Dryers, Mill 155

Source ID	Run No.	Furnish	Production Rate MSF as 3/8" hr			Veneer Thickness, inches	Target Outlet Moisture (dry basis)	Redry, %	Average Green End Temperature, °F			Average Dry End Temperature, °F		
			Dryer 1	Dryer 2	Dryer 3				Dryer 1	Dryer 2	Dryer 3	Dryer 1	Dryer 2	Dryer 3
XDV1,	1	White Fir	6.7	5.6	6.7	1/7	8-12%	16	340	320	330	345	310	350
XDV2,	2	White Fir	4.9	3.8	6.7	1/7	8-12%	11	340	330	330	345	335	360
3DV3	3	White Fir	5.9	3.9	5.8	1/7	8-12%	10	340	320	335	340	340	350

Table 4.4.3. Process Operating Conditions During Testing of the Electrified Filter Bed, Mill 155

Source ID	Run No.	Temperature at Evaporative Cooler Inlet, °F	Temperature at Inlet to EFB, °F	Temperature at Outlet to EFB, °F	Pressure Drop Across EFB, inches H_2O	Bed Voltage KV	Bed Current A	Ionizer Voltage KV	Ionizer Current mA
XDV1, XDV2	1	294	209	190	1.0	10.0	0.01	30.0	2.6
	2	295	212	192	1.0	10.5	0.01	30.5	1.4
	3	296	211	193	1.0	10.5	0.01	30.5	2.0

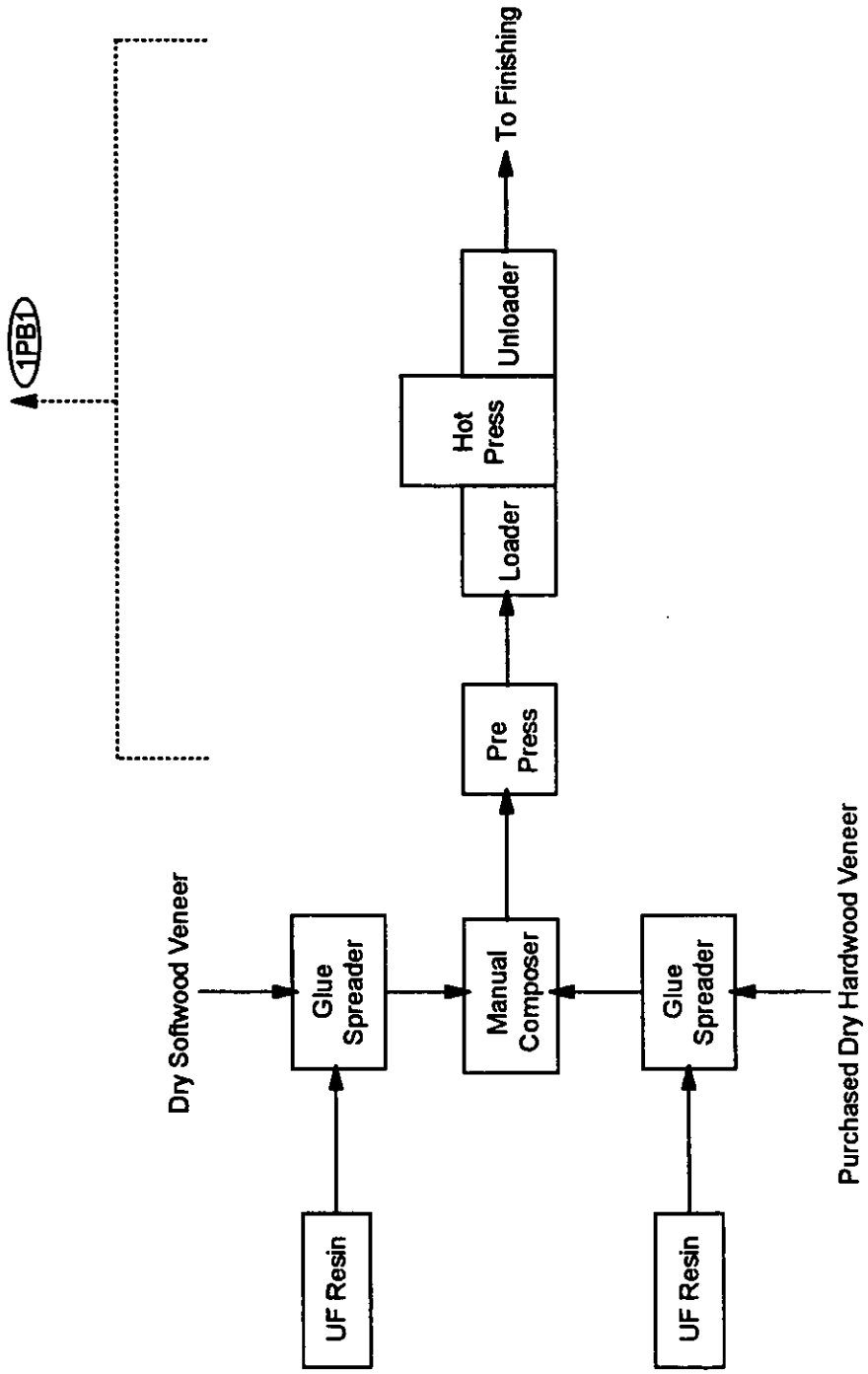

Figure 4.4.4 Hot Press No. 1, Mill 155

Table 4.4.4. Process Operating Conditions During Testing of the Softwood Hot Press, Mill 155

Source ID	Run No.	Production Rate, MSF 3/8" hr	No. of Plies	Board Thickness, inches	Furnish*		Resin Type**	No. of Glue Lines	Press Temperature, °F	Press Cycle Time, min
					Core	Face				
1PB1	1	11.5	7	3/4	WF	M	UF	6	240	5-7
	2	13.4	7	3/4	WF	M	UF	6	240	5-7
	3	13.4	7	3/4	WF	M, B	UF	6	240	5-7

*WF = White Fir, DF = Douglas Fir, M = Maple, B = Birch

**UF = Urea Formaldehyde

4.5 Process Description and Test Program, Mill 165

Figure 4.5.1 is a schematic representation of the process flow at Mill 165. This mill is located in the southeastern United States and produces approximately 400 million ft^2/year (3/8" basis) of softwood plywood. This plywood has between three and nine plies and ranges in thickness from 1/4" to 1 1/8". Southern pine is the primary furnish at this facility.

Logs are stored in the log yard prior to debarking and steaming. In the summertime, water sprays are employed to minimize checking. After debarking, the logs are cut to length and loaded into one of six immersion type log vats. Each of these vats has a capacity of approximately 250 MSF (3/8" basis), and one vat is opened every three hours. As warm water is added to the vats, the log blocks slowly heat to a temperature slightly above the desired peeling temperature (approximately 110°F). Once they are removed from the vats, the preheated blocks are placed in bins which feed one of two rotary peelers or lathes. The resulting green veneer is clipped, sorted, stacked and then transported to one of four dryers. All of these dryers are four deck, steam heated jet dryers in which air is circulated perpendicular to the direction of veneer flow. No zone to zone air recirculation is practiced in these dryers. Green trim is chipped and sent to rail cars for use as paper mill furnish.

Individual sheets of veneer are transported into the "green end" of each veneer dryer. In this section of the dryer, the primary purpose is to bring the sheets to a fixed temperature. These hot sheets then pass into the "dry end" of the dryer, which functions to reduce the moisture in the veneer sheets to a target moisture content which depends upon the type of veneer being dried. Face veneer is dried to a target moisture of 10-12%, and core veneer to a target moisture of 4-6% (dry basis). The dried sheets then pass through a veneer cooling section, which functions to equilibrate the moisture and temperature in the wood. As the sheets emerge from the veneer cooling section, they are sorted and stacked. Veneer which does not dry sufficiently to be used in plywood construction is marked as it exits the dryer and is set aside as "redry." At this facility, the moisture content of redry is reduced either by passing it through one of the veneer dryers at an elevated speed or by sending it through a radio frequency dryer. For the purposes of this study, redry production is counted during its first pass through the dryer. Vent gases from the four veneer dryers at this facility are collected and fed to a regenerative thermal oxidizer (RTO).

Stacks of dried veneer are transported to a single automated layup line, where plywood sheets are composed from alternating layers of veneer and glue, trimmed and fed to a stacker. The stacks of glued sheets are then conveyed to one of three press lines, where a prepress compresses the stack for a sufficient time period to allow the glued veneer sheets to adhere to one another. On each of the three press lines, the resulting stacks of plywood are conveyed to a hot press, where the plywood sheets are individually fed into the loader. The loader then transfers the plywood sheets into the open press, which subsequently closes. After a fixed period of time, which depends on the type of plywood being produced, the hot press opens, the hot plywood passes to the unloader and new plywood sheets are loaded. The stack of unloaded plywood is moved to finishing, where the sheets are individually trimmed to size, sanded and packaged for transport. Trim from the layup line and the plywood trim saws is chipped and either burned for fuel or sold to a particleboard mill as furnish.

Table 4.5.1 summarizes the test plan at Mill 165, including process units tested, sources associated with each unit, sampling and analytical procedures used, and the test schedule.

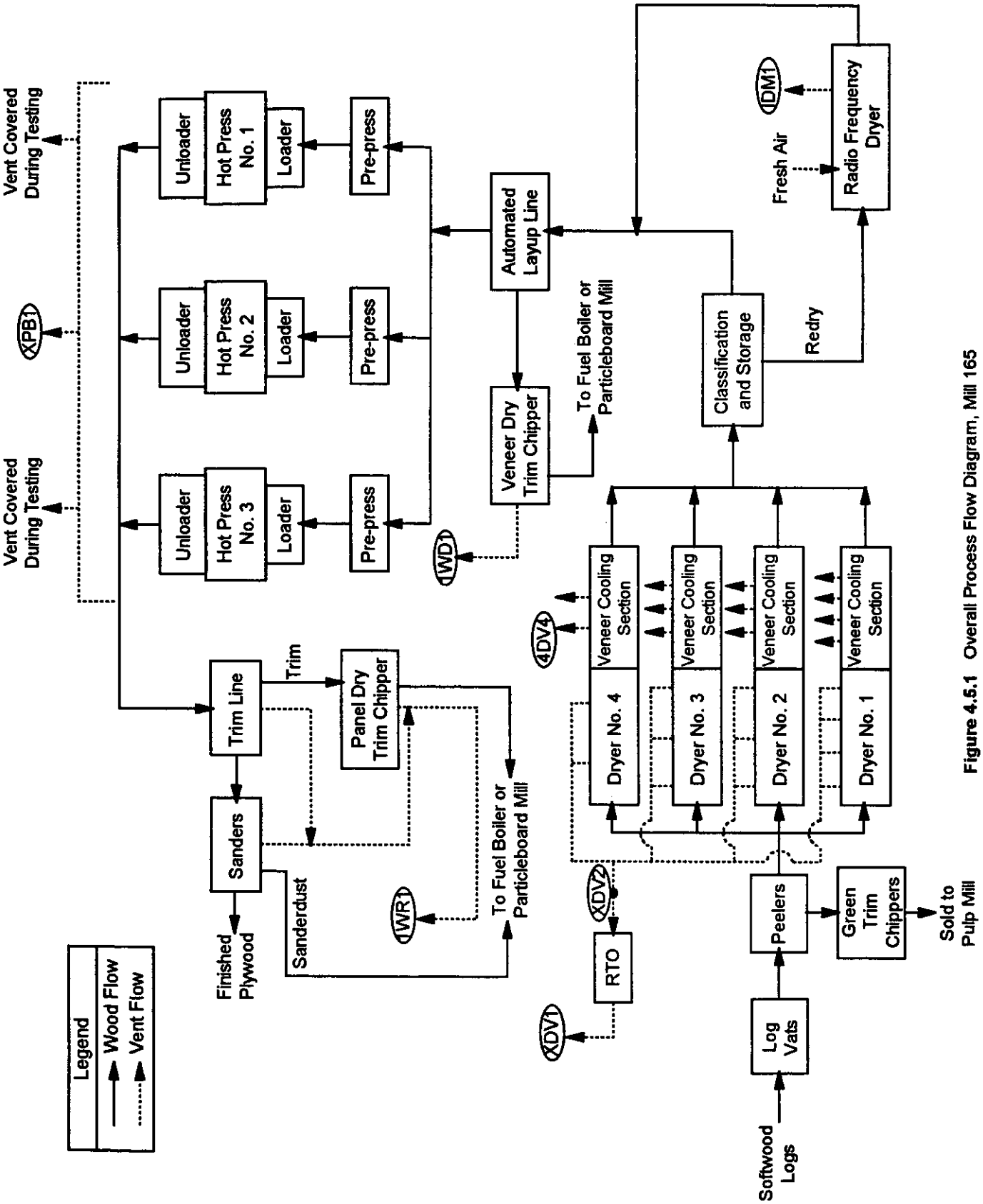

Figure 4.5.1 Overall Process Flow Diagram, Mill 165

Table 4.5.1. Emission Test Program, Mill 165

Unit	Source Code	Source Description	Emission Testing Procedure*				Test Schedule		
			NICM	CO	M25A	Alkanes	Run	Date	Time
Softwood Veneer Dryer	XDV1	RTO Exhaust	X	X	X	X	1	11/17/97	1420-1520
			X	X	X		2	11/17/97	1820-1920
			X	X	X		3	11/17/97	2008-2108
	XDV2	Combined Dryer Exhaust at Inlet to RTO	X	X	X	X	1	11/17/97	1420-1520
			X	X	X		2	11/17/97	1820-1920
			X	X	X		3	11/17/97	2008-2108
	4DV4	No. 4 Dryer, Veneer Cooling Section Exhaust No. 1	X	X			1	11/19/97	1115-1215
			X	X			2	11/19/97	1233-1333
			X	X			3	11/19/97	1350-1450
Softwood Plywood Press	XPB1	Combined Board Press Exhaust	X		X		1	11/18/97	1520-1620
			X		X		2	11/18/97	1638-1738
			X		X		3	11/18/97	1750-1850
Radio Frequency Dryer	1DM1	RF Dryer Exhaust	X		X		1	11/19/97	1230-1325
			X		X		2	11/19/97	1507-1607
			X		X		3	11/19/97	1638-1738
Dry Trim Chipper Vents	1WD1	Veneer Dry Trim Chipper Cyclone Exhaust	X		X		1	11/18/97	1300-1400
			X		X		2	11/18/97	1450-1550
			X		X		3	11/18/97	1655-1755
	1WR1	Panel Dry Trim Chipper Cyclone Exhaust	X				1	11/17/97	1246-1346
			X		X		2	11/17/97	1430-1530
			X				3	11/17/97	1635-1745

*NICM: NCASI Impinger/Canister Method; CO: Bacharach Combustion Analysis; M25A: Modified Method 25A (Total Hydrocarbon Analyzer)

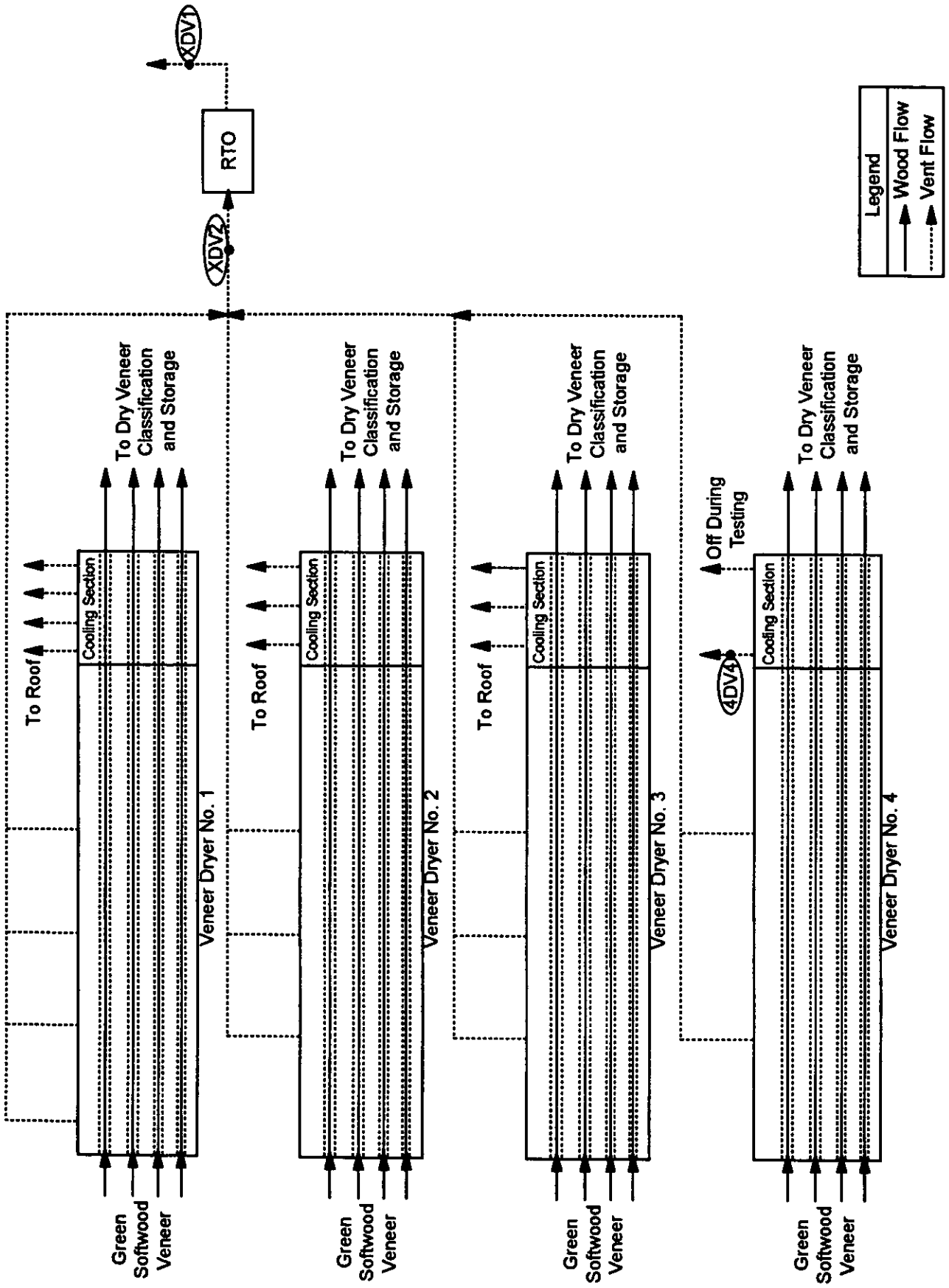

Figure 4.5.2 Softwood Veneer Dryers, Mill 165

4.5.1 *Softwood Veneer Dryers, Mill 165*

The four veneer dryers at this facility are diagrammed in Figure 4.5.2. Each of these dryers is a four deck, steam heated jet dryer in which air is circulated perpendicular to the direction of veneer flow. A jet dryer is a cross-circulation dryer which circulates air through a heat exchanger in the top of the dryer and forces that heated air down into jet tubes. Flow from these jet tubes exits through holes perpendicular to the surface of the veneer passing through the dryer. No zone to zone air recirculation is practiced in these dryers. Dryer no. 1 has 24 sections (each with a fan), one vent from each of four heated zones, and four exhaust vents from the veneer cooling section. Dryer no. 2 has 20 sections (each with a fan), one vent from each of three heated zones, and three exhaust vents from the veneer cooling section. Dryer no. 3 has 16 sections (each with a fan), one vent from each of three heated zones, and three exhaust vents from the veneer cooling section. Dryer no. 4 has ten sections (each with a fan), one vent from each of two heated zones, and two exhaust vents from the veneer cooling section.

Exhaust gases from the heated zones of these four dryers are collected and fed to a Durr, four chamber regenerative thermal oxidizer (RTO), which is diagrammed in Figure 4.5.3. The vents from the dryers feed a common header, which runs to a dropout box. As the hot gas stream enters the RTO through one of the four identical chambers, it absorbs heat from the ceramic packing media in the chamber, and then passes into the burner chamber, where the combustible compounds are burned. The oxidized gases then flow out through a second ceramic packed chamber (releasing heat to the packing media), through the outlet duct and to the stack. Approximately every 60 seconds, the direction of gas flow reverses in the paired packed chambers, so that the heat captured in the outlet chamber packing media can be released to the inlet gas stream. Just prior to this reversal of flow, a fresh air damper is opened to purge the gases in the new outlet chamber back to the combustion chamber. Switching of the pairs is offset by 30 seconds so that a uniform draft is applied to the dryers. During testing, these RTOs were run in "fuel injection mode," where natural gas is added to the dryer exhaust streams as it enters the RTO. This is the normal mode of operation at this facility. The RTOs may also be run in "burner" mode, where natural gas is supplied directly to the RTO burners.

Three sampling points were selected to characterize emissions from the veneer drying process. Three one hour samples were collected from the only operating veneer cooling section exhaust (4DV3) on veneer dryer no. 4, and from the inlet and outlet of the veneer dryer RTO (XDV2 and XDV1). The samples from the RTO were collected simultaneously. The veneer dryer and the RTO operating conditions recorded during testing are listed in Tables 4.5.2 and 4.5.3, respectively.

4.5.2 *Softwood Plywood Hot Press, Mill 165*

The layup line and hot press area at this mill are illustrated in Figure 4.5.4. On the automated layup line, plywood sheets are assembled from alternating layers of veneer and glue. The composed plywood sheets are stacked and then conveyed to one of three hot press lines. All three presses have 33 openings and were manufactured by Superior. On each of the hot press lines the stacks are compressed in a prepress to bond the layers of veneer together. Plywood sheets are then individually loaded into the hot press loader and subsequently fed into the hot press, which closes and begins to heat. Press temperatures, pressures and times vary with type of plywood produced. Table 4.5.4 is a list of hot press process operating conditions which were recorded during testing. Most visible emissions from the hot press area occur when the presses open and unload the hot plywood sheets. Since the hot presses are located side by side in an area enclosed by curtain walls, emissions from the entire hot press area were measured. During testing, two powered vents in the press area were shut down and covered. Three cupolas over the press area were also covered.

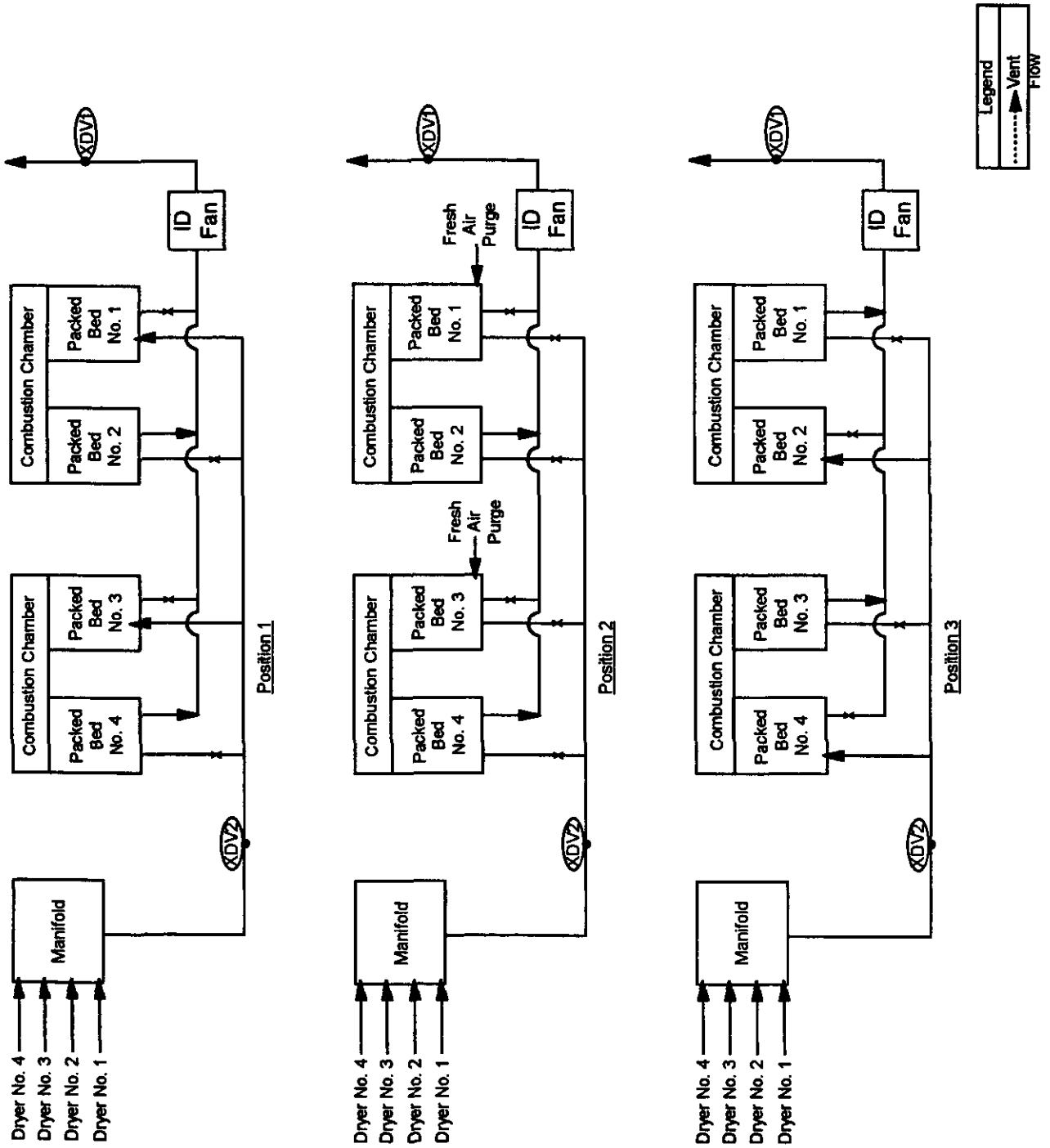

Figure 4.5.3 Regenerative Thermal Oxidizer, Mill 165

Table 4.5.2. Process Operating Conditions During Testing of the Softwood Veneer Dryers, Mill 165

Source ID, Dryer No.	Run No.	Furnish	Production Rate, MSF as 3/8"/hr	Veneer Thickness, inches	Type of Veneer Fed to Dryers	Target Outlet Moisture, % (dry basis)	Average Drying Time, min	Down Time, min	Average Redry,*** %	Average Dryer Temp., °F
XDV1, XDV2, Dryer No. 1	1	SYP*	15.8	1/6	sheet	10-12	10.0	1	25.7	390
	2	SYP	18.5	1/6	sheet	10-12	9.5	4	20.4	390
	3	SYP	16.5	1/6	sheet	10-12	9.4	0	17.6	390
XDV1, XDV2, Dryer No. 2	1	SYP	15.6	1/6	sheet	10-12	8.5	0	15.1	390
	2	SYP	17.1	1/6	sheet	10-12	8.5	0	12.7	400
	3	SYP	19.7	1/8	sheet	10-12	6.4	0	9.8	400
XDV1, XDV2, Dryer No. 3	1	SYP	9.6	1/6	strip	4-6	9.0	NR**	9.3	360
	2	SYP	7.9	1/6	strip, redry sheet	4-12	7.9	NR	2.3	350
	3	SYP	2.9	1/6	redry sheet, sheet	10-12	7.7	NR	0	300
XDV1, XDV2, Dryer No. 4	1	SYP	5.5	1/6	strip	4-6	8.1	NR	4.8	390
	2	SYP	7.4	1/6	strip	4-6	7.9	NR	1.7	390
	3	SYP	5.7	1/6	strip	4-6	7.6	NR	2.5	400
4DV4	1	SYP	5.0	1/6	4' strip	4-6	7.7	0	4	395
	2	SYP	5.0	1/6	4' strip	4-6	7.5	0	3	395
	3	SYP	4.6	1/6	4' strip	4-6	7.6	5	3	395

*SYP = Southern Yellow Pine
**NR = Not Recorded
***Amount of veneer exiting dryer which needed to be redried

Table 4.5.3. Process Operating Conditions of the Regenerative Thermal Oxidizer, Mill 165

Source ID	Run No.	Production Rate, MSF as 3/8"/hr	Metered Air Flow, ACFM	Combustion Chamber 1 Temp., °F	Combustion Chamber 2 Temp., °F	Static Pressure at Fan Inlet, in H_2O	RTO Inlet Temp., °F	RTO Outlet Temp., °F
XDV1, XDV2	1	46.4	106,000	1630	1630	10.8	340	400
	2	50.9	97,800	1630	1630	10.1	345	400
	3	44.7	98,400	1630	1630	10.0	345	398

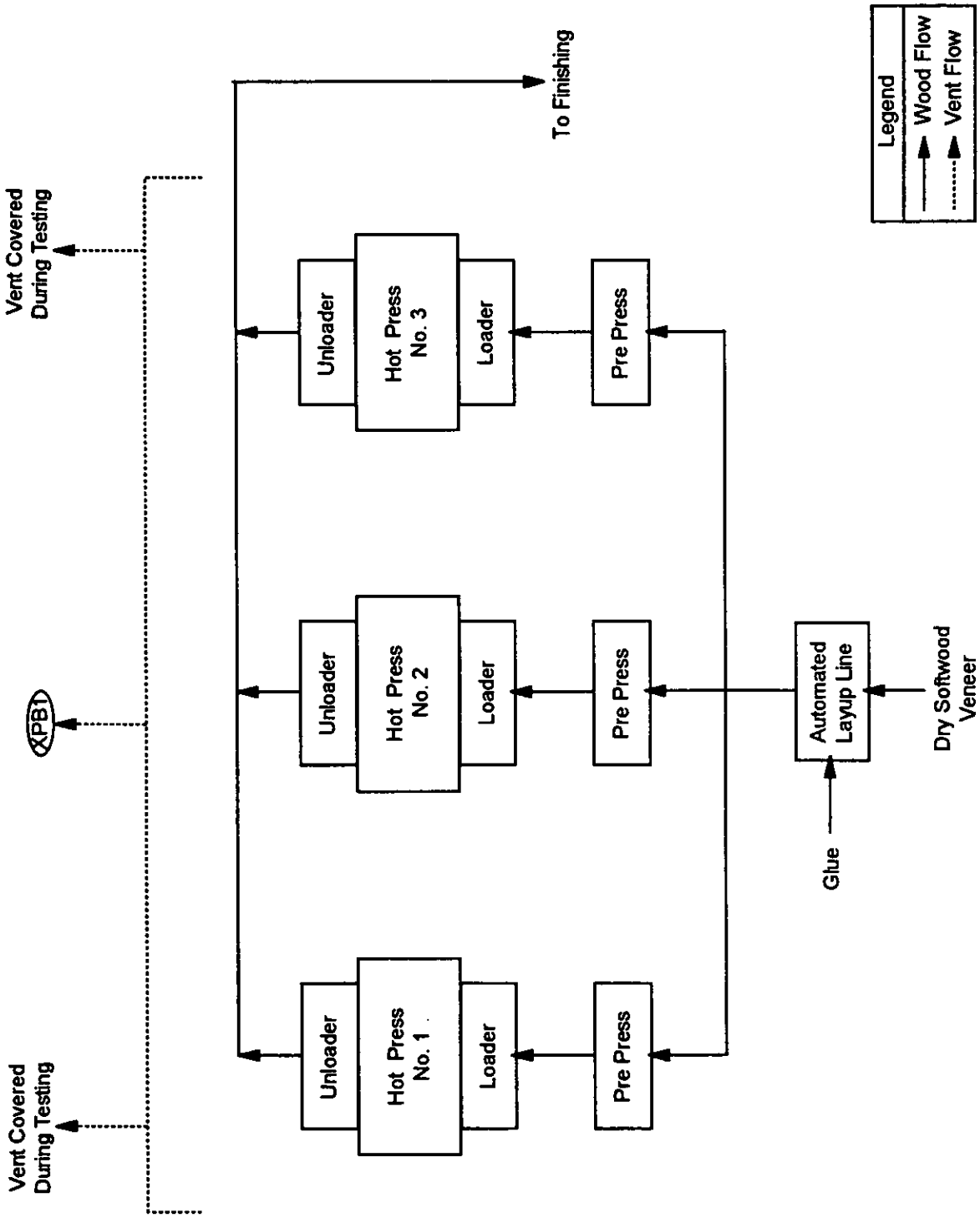

Figure 4.5.4 Hot Board Presses, Mill 165

Table 4.5.4. Process Operating Conditions During Testing of the Softwood Hot Presses, Mill 165

Source ID	Run No.	Production Rate, MSF 3/8"/hr	No. of Plies	Board Thickness, inches	Furnish*	Resin Type**	Resin Solids Content of Glue, %	No. of Glue Lines	Average Press Temperature, °F	Press Time, min
XPB1	1	30.0	5	3/4	SYP	PF	32	4	300	6-8
	2	46.1	5	3/4	SYP	PF	32	4	300	6-8
	3	36.9	4	1/2	SYP	PF	32	3	300	6-8

*SYP = Southern Yellow Pine

**PF = Phenol Formaldehyde, <0.1% Free Formaldehyde

***No catalysts, waxes or scavengers are used.

The vent tested, which was centrally located, is identified as the combined board press exhaust (XPB1). Observation of visible emissions from the presses during testing confirmed that this single vent captured most of the emissions from the three presses.

4.5.3 *Radio Frequency Dryer, Mill 165*

Some green veneer does not dry sufficiently as it passes through the steam heated dryers at this facility. This veneer (termed redry) is stacked and either sent back through the steam heated dryers again (at an elevated speed) or is fed to the radio frequency (RF) dryer. In radio frequency drying, stacks of redry are conveyed into the dryer, the doors are closed and a platen descends onto the wood. Microwave energy is applied, causing the water molecules in the wood to oscillate and the stack to heat. The platen rises at a predetermined point, the doors open, and the stack of veneer emerges. Although little or no moisture is removed, the microwave dryer serves to equilibrate moisture in the wood and renders the veneer usable for plywood production. The radio frequency dryer at this mill had a single outlet vent (1DM1) and was tested while processing stacks of incompletely dried southern yellow pine. The basic arrangement of this dryer is illustrated in Figure 4.5.5. Process operating conditions for the RF dryer are detailed in Table 4.5.5.

Table 4.5.5. Process Operating Conditions During Testing of the Softwood Radio Frequency Dryer, Mill 165

Source ID	Run No.	Furnish*	Production Rate, MSF as 3/8"/hr	Veneer Thickness, inches	Average Dryer Temperature, °F
1DM1	1	SYP	4.2	1/6	195
	2	SYP	3.8	1/6, 25%; 1/8, 75%	199
	3	SYP	4.0	1/6	192

*SYP = Southern Yellow Pine

4.5.4 *Dry Trim Chipper, Mill 165*

The dry trim handling system at this facility is diagrammed in Figure 4.5.6. Trim from the layup line is dropped onto a conveyor which feeds the veneer dry trim chipper. Vent emissions from this chipper and the layup line are fed to a cyclone and baghouse (1WD1). Dry trim from the panel trim saws is fed to the panel dry trim chipper. Exhaust gases from the trim chipper and sanders are sent to a cyclone and baghouse (1WR1) for particulate matter removal. Three one hour samples were collected from each of these sources. Process operating conditions for these sources are listed in Table 4.5.6. Emission rates were calculated using the finished board production rate (estimated by the mill) during the time period when samples were being collected. The trim processed by the chippers was estimated by the mill as 10% of the raw board production. Annual emissions were calculated by multiplying the emission rate by the yearly production rate of the mill.

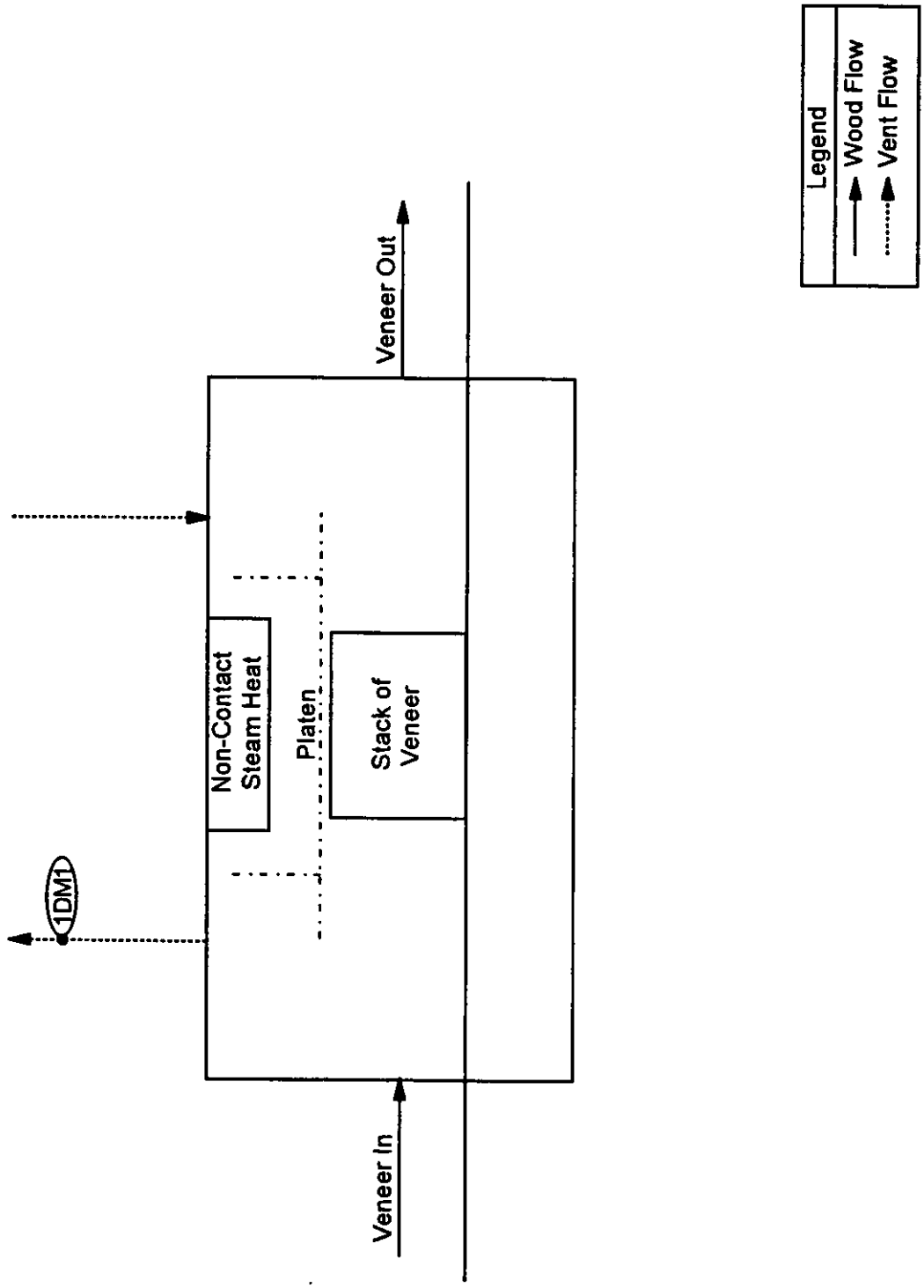

Figure 4.5.5 Radio Frequency Dryer, Mill 165

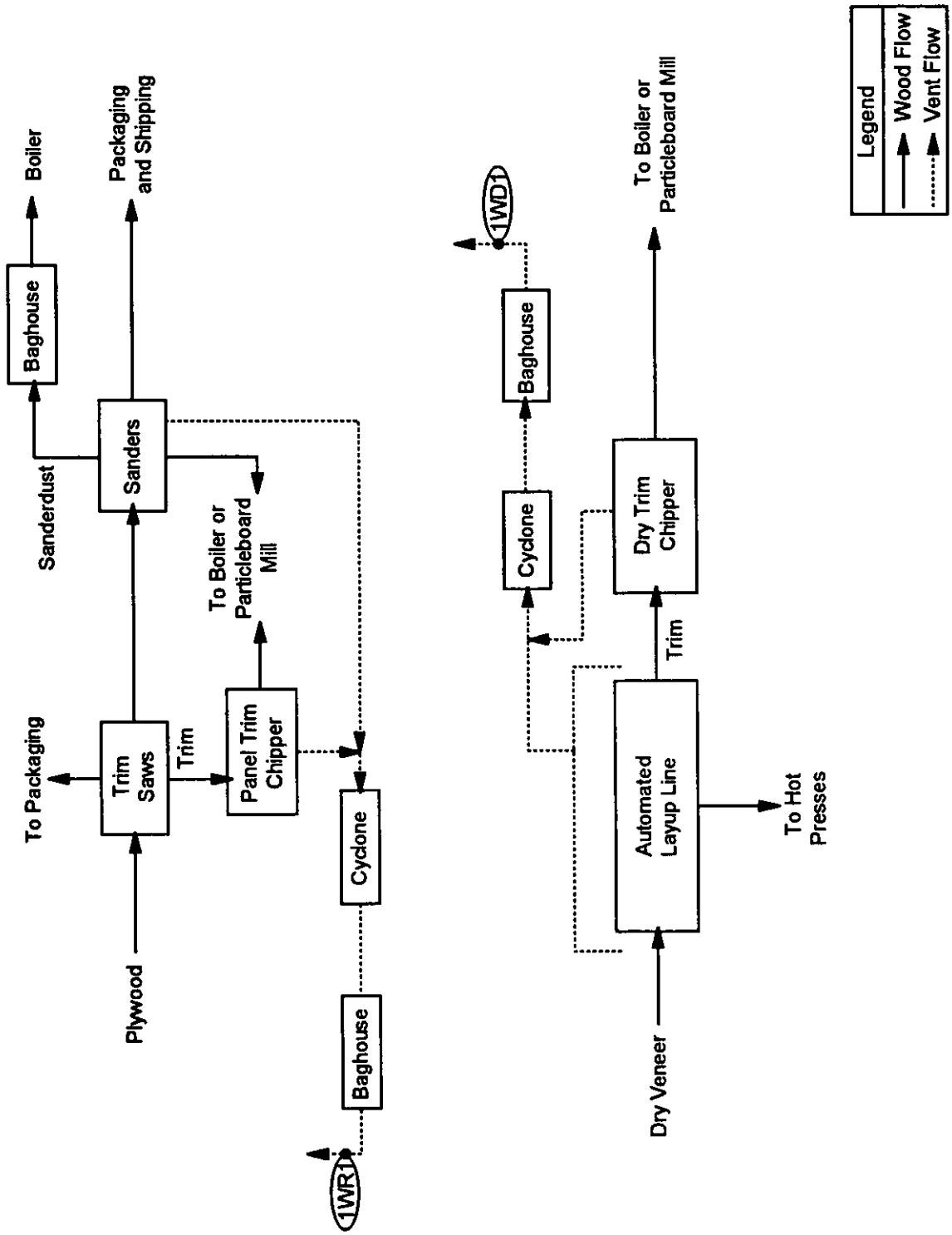

Figure 4.5.6 Trim and Sanderdust Handling, Mill 165

Table 4.5.6. Process Operating Conditions During Testing of the Dry Trim Chippers, Mill 165

Source ID	Run No.	Furnish*	Finished Board Production Rate, MSF as 3/8"/hr**	Estimated Board Trim Processed, MSF as 3/8"/hr***
1WD1	1	SYP	89.9	10.0
	2	SYP	89.9	10.0
	3	SYP	89.9	10.0
1WR1	1	SYP	48.1	5.3
	2	SYP	48.1	5.3
	3	SYP	48.1	5.3

*SYP = Southern Yellow Pine
**based on mill estimates
***based on mill estimates of percentage trimmed

4.6 Process Description and Test Program, Mill 170

Figure 4.6.1 is a schematic representation of the process flow at Mill 170. This mill is located in the southeastern United States and produces approximately 380 million ft^2/year (3/8" basis) of softwood plywood. This plywood is composed of 3, 5 or 7 plies and typically ranges in thickness from 1/4" to 3/4". Southern pine is the primary furnish at this facility. Production is scheduled 24 hours a day, 365 days per year, excluding maintenance downtime.

Logs are stored in the log yard prior to debarking and soaking. After debarking, the logs are cut to length and loaded into one of six log soaking vats. While in the vats, the log blocks slowly heat to a temperature slightly above the desired peeling temperature (approximately 110°F). Once they are removed from the vats, the preheated blocks are placed in bins which feed one of two rotary peelers. The resulting green veneer is clipped, sorted and stacked. Green clippings are chipped and either sold or burned in the boiler, depending on particle size. The green peeled veneer sheets are transported to one of three dryers. These dryers are multiple deck, steam heated, two or three zone jet dryers in which air is circulated perpendicular to the direction of veneer flow.

Individual sheets are loaded into the veneer dryers and subsequently transported into the first heated zone, the "green end," of the dryers. The primary function of the first zone is to heat the sheets to a fixed temperature. These hot sheets then pass into the second or third zone, the "dry end," of the dryers, which functions to reduce the moisture in the veneer sheets to 8-10% (dry basis). The dried sheets are conveyed through a veneer cooling section, which functions to equilibrate the moisture and temperature in the wood. After the sheets exit the veneer cooling section, they are sorted and stacked. Veneer which does not dry sufficiently to be used in plywood construction is marked as it exits the dryer and is set aside as "redry." At this facility, the moisture content of redry is reduced by passing it through one of the veneer dryers (normally no. 3) at an elevated speed. For the purposes of this study, redry production was counted during its first pass through the dryer.

Exhaust gases from the heated zones of the three veneer dryers are sent to a mixing box. The combined dryer vent gases are pulled from the mixing box into a regenerative thermal oxidizer (RTO). Exhaust gases from the dryer cooling sections are vented to the atmosphere.

The dried veneer is transported to an automated lay-up line, where plywood sheets are assembled by alternating layers of veneer and glue. Stacks of glued sheets are conveyed to one of three press lines, where a prepress compresses the stack for a sufficient time period to allow the glued veneer sheets to adhere to one another. Stacks from the prepress are then conveyed to a hot press, where the sheets are individually fed into the loader. These sheets are conveyed into the open press, which closes after the loading is complete. During the press cycle, heat and pressure are applied to the sheets until the individual pieces of veneer within the sheets are permanently bonded. When the hot press opens, the hot plywood sheets are conveyed to the unloader. The stack of unloaded sheets is moved to finishing, where the sheets are individually trimmed to size, patched, sanded, and packaged for transport.

Table 4.6.1 summarizes the emission test program at Mill 170, including process units tested, sources associated with each unit, sampling and analytical procedures used, and the test schedule.

4.6.1 *Softwood Veneer Dryer, Mill 170*

The three Coe veneer dryers are diagrammed in Figure 4.6.2. Each of these dryers is a four deck, steam heated, jet dryer in which air is circulated perpendicular to the direction of veneer flow. A jet dryer is a cross-circulation dryer which circulates air through a heat exchanger in the top of the dryer and forces the heated air down into jet tubes. Flow from these jet tubes exits through openings

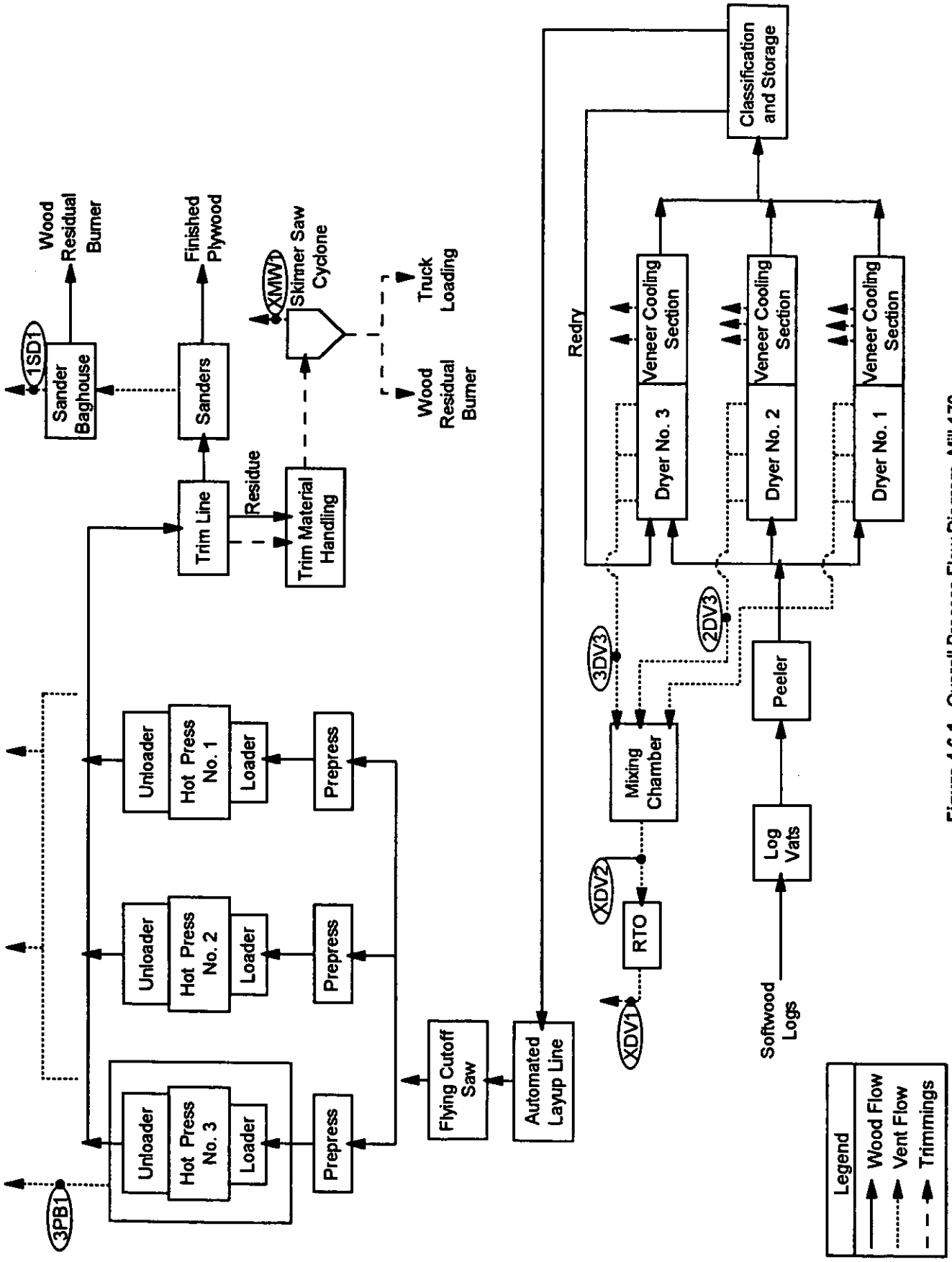

Figure 4.6.1 Overall Process Flow Diagram, Mill 170

Table 4.6.1. Emission Test Program, Mill 170

Unit	Source Code	Source Description	Emission Testing Procedure*			Test Schedule		
			NICM	CO	M25A	Run	Date	Time
Softwood Veneer Dryer	2DV3	No. 2 Veneer Dryer Combined Vent	X			1	12/8/97	1625-1725
			X			2	12/9/97	1021-1121
			X			3	12/9/97	1340-1440
	3DV3	No. 3 Veneer Dryer Combined Vent	X			1	12/8/97	1625-1725
			X			2	12/9/97	1021-1121
			X			3	12/9/97	1340-1440
	XDV2	Veneer Dryer RTO Inlet	X	X	X	1	12/8/97	1625-1725
			X	X	X	2	12/9/97	1021-1121
			X	X	X	3	12/9/97	1340-1440
	XDV1	Veneer Dryer RTO Outlet	X	X	X	1	12/8/97	1625-1725
			X	X	X	2	12/9/97	1021-1121
			X	X	X	3	12/9/97	1340-1440
	2DV4	No. 2 Veneer Dryer Board Cooler Vent No. 1	X		X	1	12/11/97	1840-1933
			X		X	2	12/15/97	1210-1310
			X		X	3	12/15/97	1435-1536
	2DV5	No. 2 Veneer Dryer Board Cooler Vent No. 2	X			1	12/11/97	1840-1933
			X		X	2	12/15/97	1210-1310
			X		X	3	12/15/97	1435-1536
	2DV6	No. 2 Veneer Dryer Board Cooler Vent No. 3	X			2	12/15/97	1210-1310
			X			3	12/15/97	1435-1536
Softwood Plywood Hot Board Press	3PB1	No. 3 Board Press Vent	X		X	1	12/10/97	1520-1620
			X		X	2	12/10/97	1730-1830
			X		X	3	12/11/97	1010-1110
Sander Bag House	1SD1	Vent	X		X	1	12/10/97	1628-1728
			X		X	2	12/10/97	1923-2023
			X		X	3	12/11/97	1923-2023
Skinner Saw Cyclone	XMW1	Vent	X			1	12/10/97	1345-1445
			X			2	12/10/97	1545-1645
			X		X	3	12/11/97	1027-1127

*NICM: NCASI Impinger/Canister Method; CO: Bacharach Combustion Analysis; M25A: Modified Method 25A (Total Hydrocarbon Analyzer)

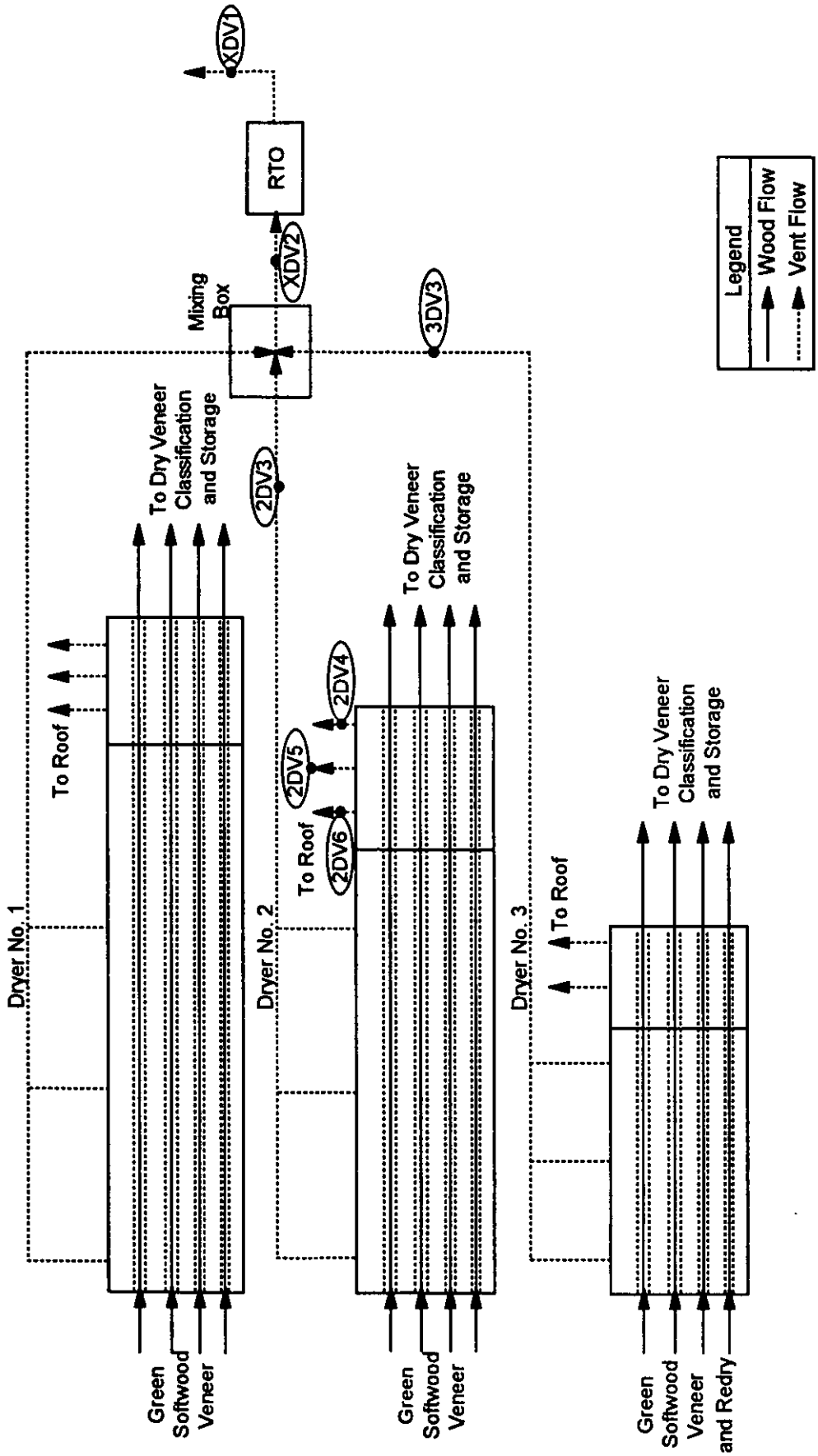

Figure 4.6.2 Softwood Veneer Dryers, Mill 170

perpendicular to the surface of the veneer passing through the dryer. No zone-to-zone air recirculation is practiced in these dryers. Dryer no. 1 has 24 sections (each with a fan), one vent from each of the three heated zones, and three exhaust vents from the veneer cooling section. Dryer no. 2 has 20 sections (each with a fan), one vent from each of the three heated zones, and three exhaust vents from the veneer cooling section. Dryer no. 3 has 12 sections (each with a fan), one vent from each of the three heated zones, and two exhaust vents from the veneer cooling section.

Exhaust gas from the heated zones of these three dryers is collected and introduced to a Smith Environmental Corporation five chamber regenerative thermal oxidizer (RTO). The vents from the dryers feed a common header, which runs to a mixing box. The hot gas stream enters the RTO through two of the five identical chambers, it absorbs heat from the ceramic packing media in the chamber, and passes into the combustion chamber, where the combustible compounds are burned. The oxidized gases then flow out through a third and fourth ceramic packed chamber (releasing heat to the packing media), through the outlet duct and to the stack. A fifth chamber not being used as an inlet or outlet is purged with fresh air. This RTO has five different chamber configurations or cycles each lasting 52 seconds. The flow changes that occur in between each cycle are (1) an outlet chamber becomes an inlet chamber (transferring heat to the inlet gas stream), (2) the purged chamber becomes an outlet chamber (absorbing heat from the outlet gas stream), and (3) an inlet chamber is isolated from the incoming gas and fresh air is used to purge the chamber back to the inlet duct. The flow through the remaining chambers, one inlet and one outlet, is unchanged. The gas exiting the chamber being purged flows into the combustion chamber and through the outlet chambers. Three successive RTO chamber positions are represented in Figure 4.6.3. During testing, the RTO was operated in "burner mode." In that mode, gas is fed directly to the burners in the combustion chamber.

Seven sampling points were selected to characterize emissions from the veneer dryer process. Samples were collected from the combined heated zone exhaust for veneer dryer no. 2 (2DV3), the combined heated zone exhaust for veneer dryer no. 3 (3DV3), the RTO inlet (XDV2), and the RTO outlet (XDV1). All four of these sources were tested simultaneously. The cooling vents for veneer dryer no. 2 (2DV4, 2DV5 and 2DV6) were also tested. Each test consisted of three 1 hour runs. The veneer dryer and the RTO operating conditions recorded during testing are listed in Tables 4.6.2 and 4.6.3, respectively.

4.6.2 *Softwood Plywood Hot Press, Mill 170*

The lay-up line and hot press area are illustrated in Figure 4.6.4. On the lay-up line, plywood sheets are assembled by alternating layers of veneer and glue. These partially bonded sheets are trimmed, stacked, and conveyed to one of three hot press lines. The sheets are compressed in a prepress to facilitate loading into the hot press. In the prepress, the stacks of plywood are compressed at 3200 psi (hydraulic pressure) for 6 minutes to further bond the layers of veneer. The resultant sheets are individually loaded into the hot press loader and subsequently fed into the hot press, which closes and begins to supply heat to the plywood sheets. Press temperatures, pressures and cycle times vary with type of plywood being produced. Table 4.6.4 lists the no. 3 press process operating conditions recorded during testing. Indirect steam is used to provide heat for the presses. When the hot press opens, the individual sheets are removed and stacked by the unloader. This stack of hot plywood sheets is allowed to cool until it is moved to the finishing area.

The majority of the visible emissions from the hot presses occur when the presses open and the hot plywood sheets are unloaded. At this facility, emissions from the 30 opening no. 3 Siempelkamp hot press were measured. During this testing a special enclosure was constructed to capture the majority of the fugitive emissions from the no. 3 press. The enclosure isolated press no. 3 from the nos. 1 and

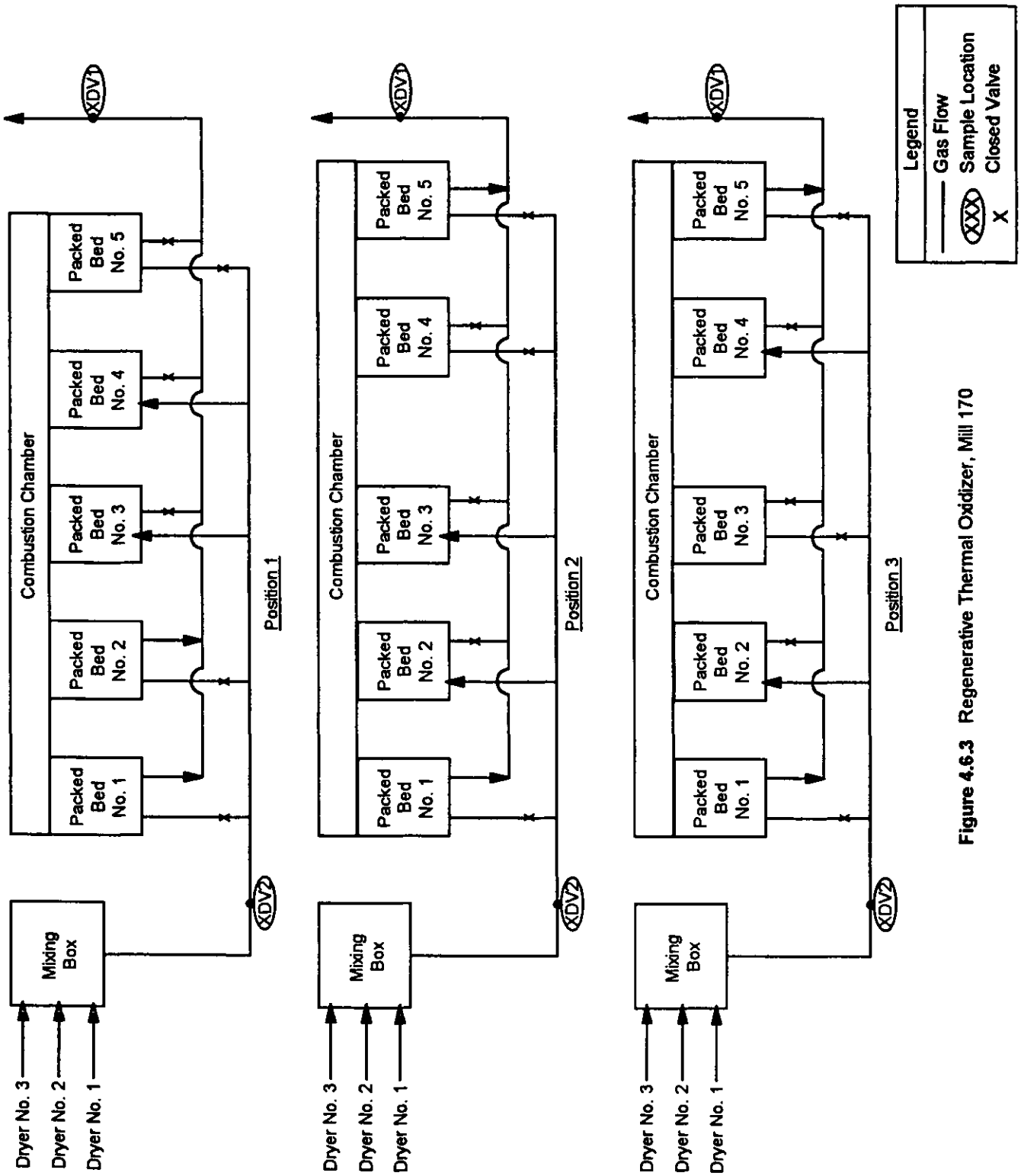

Figure 4.6.3 Regenerative Thermal Oxidizer, Mill 170

Table 4.6.2. Process Operating Conditions During Testing of Softwood Veneer Dryers, Mill 170

Source ID	Run No.	Date	Time	Production Rate, MSF 3/8"/hr	Veneer Thickness	Veneer Type	Average "Green End" Dryer Temperature, °F	Average "Dry End" Dryer Temperature, °F	Average Redry Per Hour,* %	Average Dryer Retention Time, min
Dryer No. 1 (1DV)	1	12/8/97	1625-1725	33.2	1/6 "	sheets	NR	NR	12.4	7.7
	2	12/9/97	1021-1121	32.6	1/6 "	sheets	390	394	13.7	7.2
	3	12/9/97	1340-1440	30.2	1/6 "	sheets	390	370	22	7.6
Dryer No. 2 (2DV3)	1	12/8/97	1625-1725	17	1/8 "	sheets	368	400	8.5	5.7
	2	12/9/97	1021-1121	11.1	1/8 "	sheets	370	398	13.7	5.6
	3	12/9/97	1340-1440	14.5	1/8 "	sheets	370	400	12.5	5.8
Dryer No. 3 (3DV3)	1	12/8/97	1625-1725	9.6	1/6 "	strips	397	400	6.8	7.3
	2	12/9/97	1021-1121	10.4	1/6 "	strips	398	396	13.5	7.1
	3	12/9/97	1340-1440	13.8	1/6 "	strips, redry	403	401	6.3	5.5
Dryer No. 2 (2DV4, 2DV5, 2DV6)	1	12/11/97	1840-1933	16.4	1/6 "	sheets	355	398	19.6	7.3
	2	12/15/97	1210-1310	18.1	1/6 "	sheets	352	396	18.5	5.7
	3	12/15/97	1435-1536	18.5	1/6 "	sheets	350	396	10.1	7.0

*Percentage of veneer exiting the dryer that required redrying

Table 4.6.3. Process Operating Conditions for the Regenerative Thermal Oxidizer, Mill 170

Source ID	Run No.	Production Rate, MSF 3/8"/hr	Dryers Exhaust Inflow, ACFM	Static Pressure at Fan Inlet, in H_2O	Combustion Chamber Temp., °F	RTO Inlet Temp., °F	RTO Outlet Temp., °F	Average Natural Gas Usage,* ft^3/hr
XDV1, XDV2	1	59.8	66,200	32.0	1500	331	404	1667
	2	54.1	66,000	35.4	1500	329	412	1667
	3	58.5	65,800	36.1	1500	331	409	1667

*December monthly average

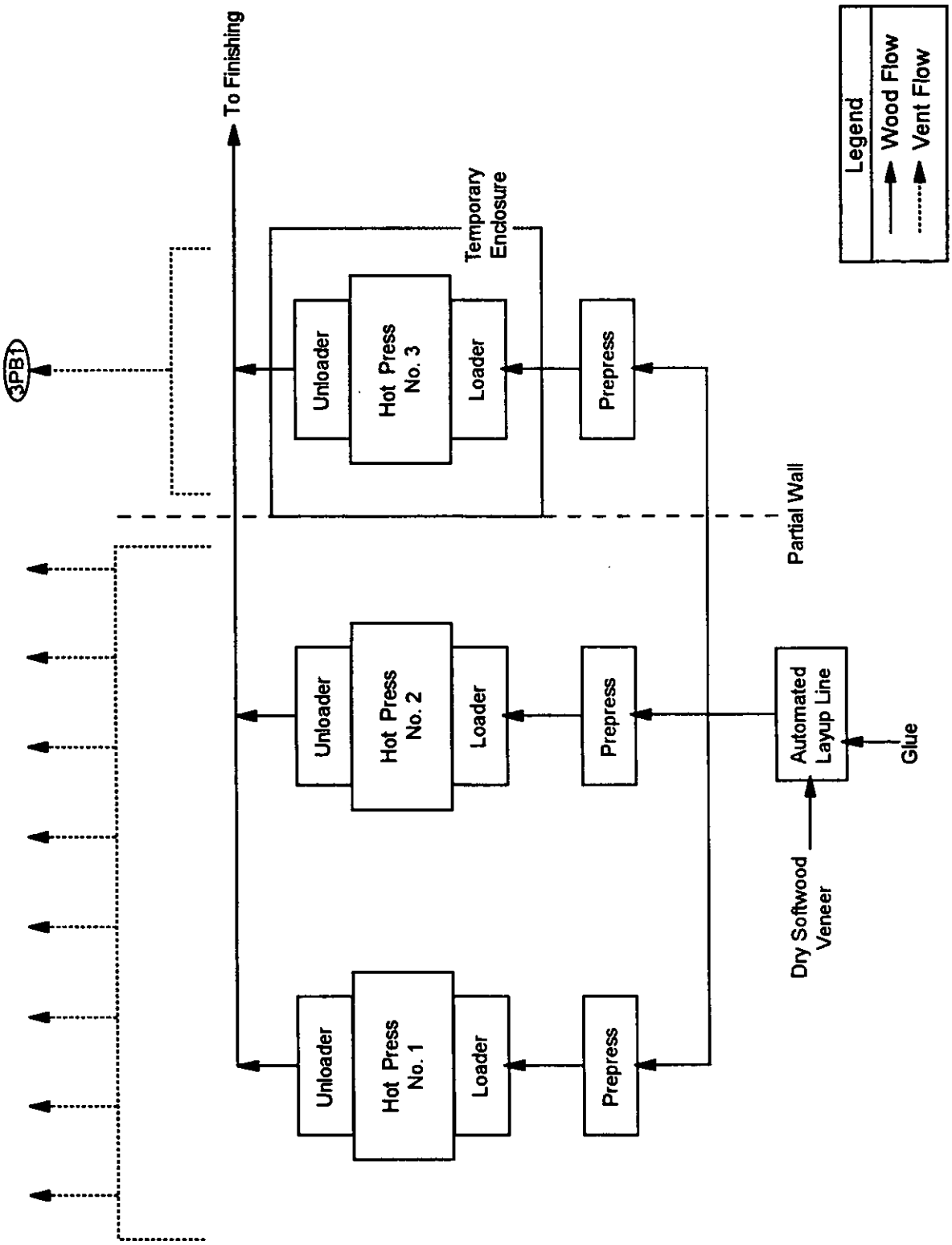

Figure 4.6.4 Hot Board Press, Mill 170

Table 4.6.4. Process Operating Conditions During Testing of the Softwood Hot Presses, Mill 170

Source ID	Run No.	Production Rate, MSF 3/8"/hr	No. of Plies	Board Thickness, inches	Resin Type,* %	No. of Glue Lines	Average Press Temperature, °F	Press Time, min
3PB1	1	13.9	5	3/4	PF	4	300	6-8
	2	11.5	5	3/4	PF	4	300	6-8
	3	12.8	5	5/8	PF	4	300	6-8

*PF = Phenol Formaldehyde

2 presses. The enclosure was exhausted through a fan-driven 20-inch flexible duct and vented to the atmosphere.

The temporary enclosure built for the no. 3 press is illustrated in Figure 4.6.5. Three tarps were draped from the base of the doghouse or cupola vent, providing three sides of the temporary enclosure. The fourth side of the enclosure was an existing wood structure that extended downward from the roof separating the no. 2 press area from the no. 3 press area. Sheet metal and plywood were used to close off the cupola vent and separate the no. 2 and no. 3 press areas. A five-horsepower, 3450 rpm fan was used to move approximately 8400 acfm of exhaust gas through a 20 inch duct during sampling. The sample port was located 2 feet upstream of the fan (3PB1).

4.6.3 *Finishing Area, Mill 170*

In the finishing area, the plywood is trimmed to size, patched, sanded, and packaged for transport as illustrated in Figure 4.6.6. Exhaust gases from these sources are vented to the atmosphere after passing through either the sanderdust baghouse or the skinner saw cyclone. Three 1 hour tests were conducted on each source.

The skinner and equalizer saws trim approximately 10% from the rough edged plywood to make 4' x 8' sheets. The trimmings fall to a conveyor belt which transports them to a hogger. The hogger breaks the larger trimmings into smaller reusable pieces. The hogger exhaust is combined with groover chips from the specialty saw and the time-saver sander, and with wood dust from the skinner and equalizer saws. The combined flow is pneumatically conveyed to the skinner saw cyclone. Three 1 hour HAP tests were conducted on the outlet of the skinner saw cyclone (XMW1) but concurrent VOC sampling was conducted for the third run only. Process operating conditions recorded during testing of the skinner saw cyclone are listed in Table 4.6.5.

Production rates for the skinner and equalizer saws are expressed as MSF (3/8" basis) of whole plywood sheets trimmed during the time testing was in progress. Since these saws can process plywood faster than the presses produce it, they run intermittently. Annual emissions can be calculated by multiplying the emission rates by the yearly production rate of the mill.

The three sources exhausted to the sander dust baghouse are the sander, the specialty saw, and the time-saver sander, as illustrated in Figure 4.6.6. Exhaust passes through a cyclone prior to the baghouse. The eight-drum sander is considered the major source of sanderdust because of the greater number of boards that it sands and its ability, which the other sanders do not have, to simultaneously sand both sides of the board. The one-drum specialty saw and one-drum time-saver sander can only sand one side of the board at a time. Production rates in Table 4.6.5 are expressed both as MSF of surface sanded per hour and MSF 3/8" basis of plywood sheets processed per hour. Annual emissions can be calculated by multiplying the emission rates by the yearly production rate (in MSF 3/8") of the mill. Not all of the sources were running simultaneously during the testing. Operating conditions recorded during testing of the sander baghouse exhaust are listed in Table 4.6.6.

This facility uses a Clarke Pneu-Aire 60 bag baghouse equipped with reverse air cleaning to remove particles from the sander dust air stream. These particles accumulate on fabric filters inside the baghouse. The cylindrical bags are cleaned by isolating dirty bags from the source air stream and blowing clean air through the isolated bags in the direction opposite of normal flow. The sampling point was located approximately 25 feet upstream of the sander dust baghouse (1SD1).

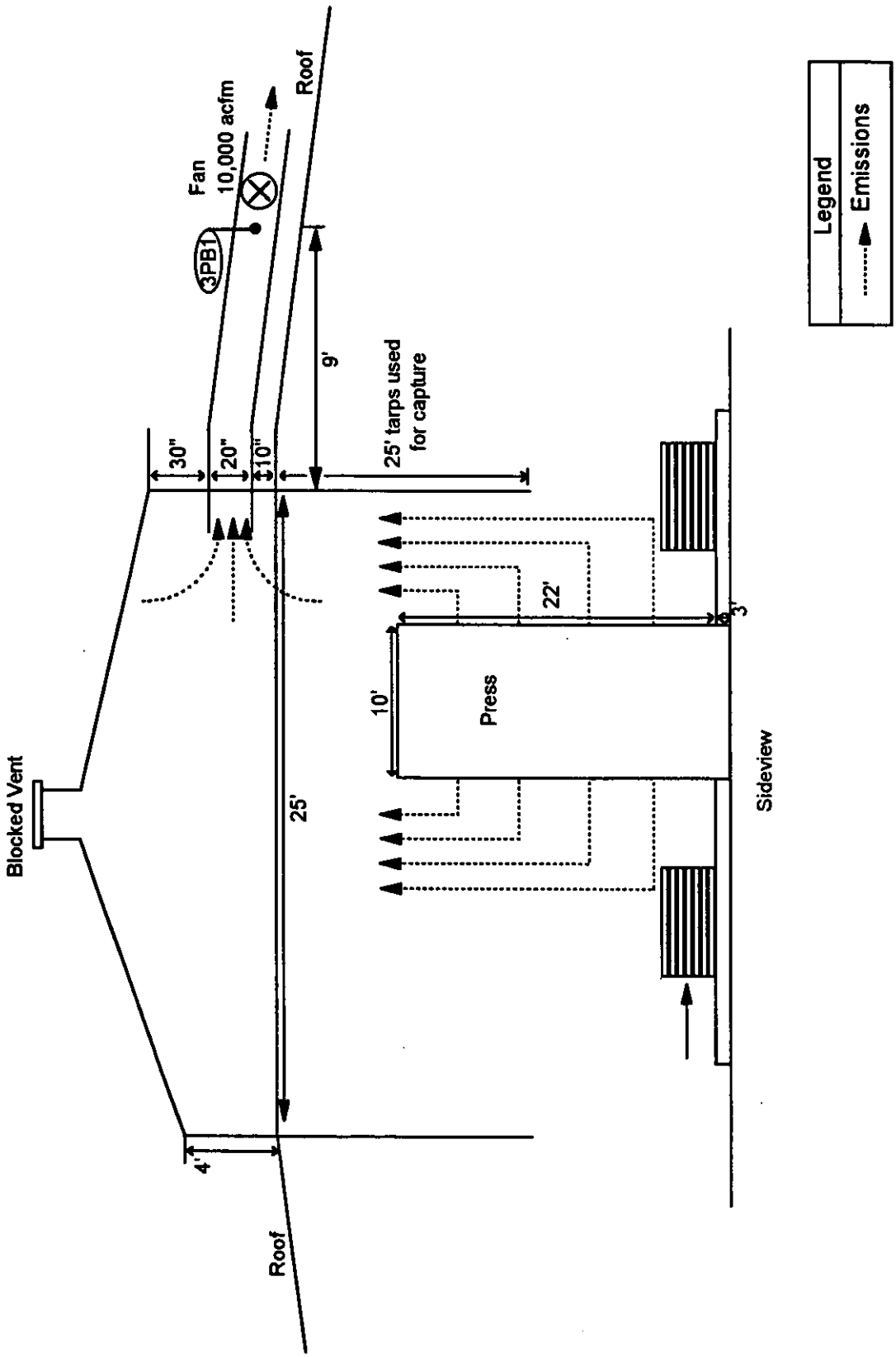

Figure 4.6.5 Temporary Press Enclosure, Mill 170

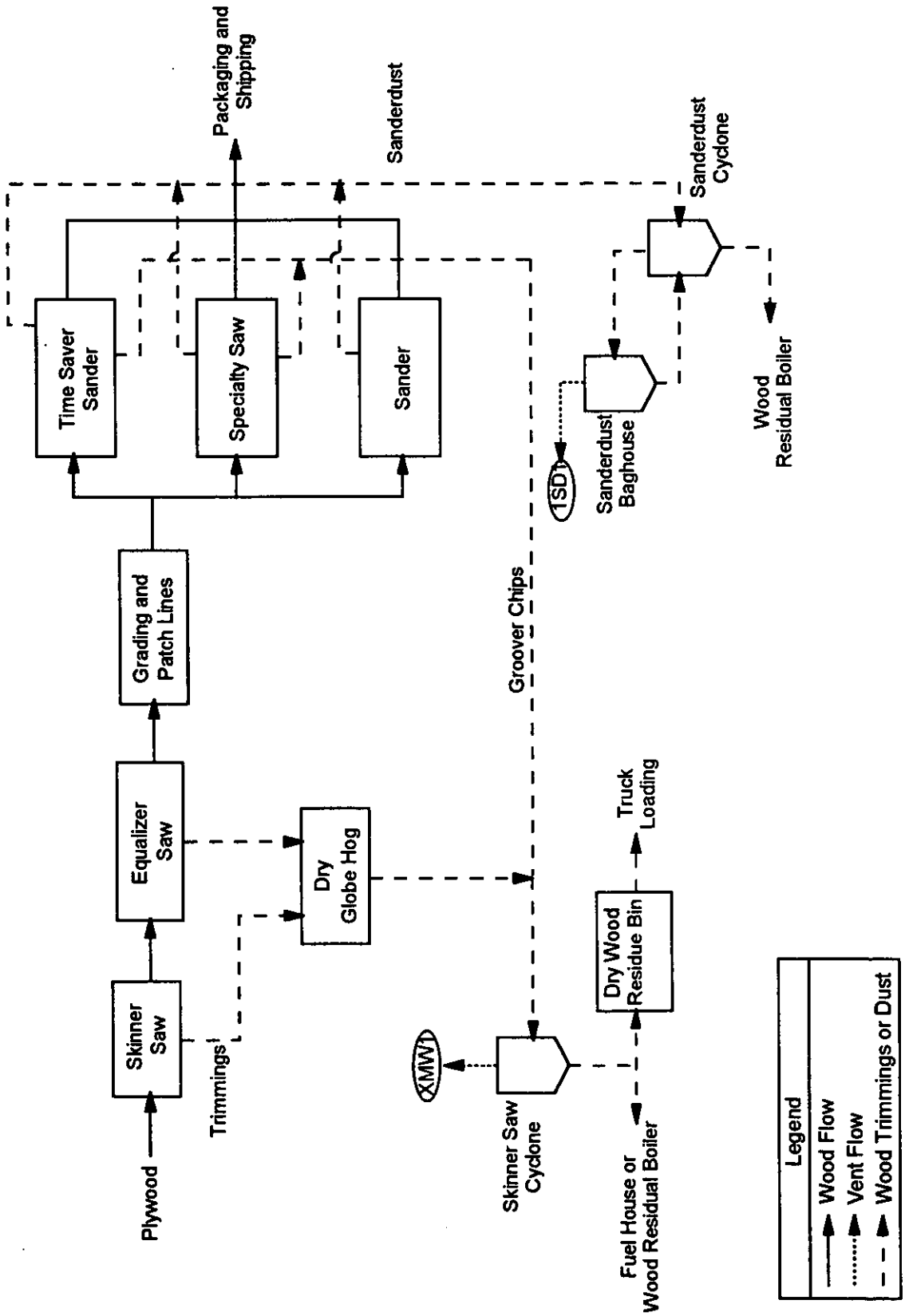

Figure 4.6.6 Wood Residue Handling, Mill 170

Table 4.6.5. Process Operating Conditions During Testing of the Skinner Saw Cyclone, Mill 170

Source	Run No.	Date	Time	Finished Board Production Rate,** (MSF 3/8"/hr)	Estimated Board Trim Processed,*** MSF as 3/8"/hr	Plywood Thickness
Skinner Saw (XMW1)	1	12/10/97	1345-1445	79.4	8.8	3/4"
	2	12/10/97	1545-1645	75.2	8.3	3/4", 11/32"
	3	12/11/97	1027-1127	55.1	6.1	1/2"

NR = grade not recorded
**based on mill estimates
***based on mill estimates of percentage trimmed

Table 4.6.6. Process Operating Conditions During Testing of the Sander Baghouse (1SD1), Mill 170

Source	Run No.	Date	Time	Production Rate, MSF/hr	Production Rate, MSF as 3/8"/hr	Plywood Thickness
Time Saver Sander	1	12/10/97	1628-1728	9.2	18.4	3/4"
	2	12/10/97	1923-2023	3.1	6.2	3/4"
	3	12/11/97	1923-2023	NO	NO	
Specialty Saw	1	12/10/97	1628-1728	9.6	19.2	3/4"
	2	12/10/97	1923-2023	NO	NO	
	3	12/11/97	1923-2023	18.5	37.0	3/4"
Sander	1	12/10/97	1628-1728	27.5*	27.5	3/4"
	2	12/10/97	1923-2023	52.9*	26.5	3/8"
	3	12/11/97	1923-2023	46.5*	31.0	1/2"
Total	1	12/10/97	1628-1728	46.2	65.1	
	2	12/10/97	1923-2023	56.0	32.7	
	3	12/11/97	1923-2023	65.0	68.0	

NO = Source not operating during testing
*These numbers reflect that both surfaces of the sheet were sanded.

4.7 Process Description and Test Program, Mill 188

Figure 4.7.1 is a schematic representation of the process flow at Mill 188. This mill is located in the Northwestern United States and produces approximately 180 million ft^2/year (3/8" basis) of softwood plywood. The sheathing produced ranges in thickness from 3/8" to 3/4". Douglas-fir is the primary furnish at this facility, but small amounts (less than 3%) of white fir and larch are also used.

Logs are stored in the log yard prior to debarking and steaming. In the summertime, water sprays are employed to minimize checking. After debarking, the logs are cut to length and loaded into one of seven drive-in log steaming vats. Each of these vats has a capacity of approximately 220 MSF (3/8" basis). One vat is opened every two hours. As water sprays and live steam are added to the vats, the log blocks slowly heat to the desired peeling temperature (approximately 110°F).

Once they are removed from the vats, the preheated blocks are placed in bins which feed a single rotary peeler or lathe. The resulting green veneer is clipped, sorted and stacked. The resulting stacks of green veneer are then transported to one of four dryers. Dryers 1, 2, and 3 are six deck, single zone, steam heated longitudinal dryers, in which air is circulated in the direction of veneer flow. Dryer number 4 is a four deck, two zone, steam heated jet dryer in which air is circulated perpendicular to the direction of veneer flow. Green material not suitable for plywood manufacture is chipped and sold to either a paper mill or a particleboard mill, depending on particle size.

Individual sheets of veneer are transported into the veneer dryers, which reduce the moisture content of the veneer sheets to a level which will allow successful plywood construction. The dried sheets are then conveyed through the veneer cooling section, which functions to equilibrate the moisture and temperature in the wood. As the sheets emerge from the veneer cooling section, they are sorted and stacked. Sheets which are not adequately dried (redry) are stacked and later redried. For the purposes of this study, redry is considered or "counted" in the dryer production rates during its first pass through a dryer. Vent gases from the heated sections of four veneer dryers at this facility are collected and sent to a Geoenergy wet electrostatic precipitator (WESP).

Stacks of dried veneer are transported to a single automated layup line, where plywood sheets are assembled from alternating layers of veneer and glue, trimmed, and fed to a stacker. The stacks of glued sheets are then conveyed to one of two press lines, where a prepress compresses the stack for a time period sufficient to allow the glued veneer sheets to adhere to one another. The resulting stacks of plywood sheets are conveyed to the hot press loader, where they are individually fed into the loader decks. When the hot press opens, the load of hot plywood sheets is conveyed to the unloader and the new sheets are loaded. The stack of unloaded sheets is moved to finishing, where the sheets are individually trimmed to size, sanded and packaged for transport.

Table 4.7.1 summarizes the emission test plan at Mill 188, including process units tested, sources associated with each unit, sampling and analytical procedures used, and the test schedule.

4.7.1 *Softwood Veneer Dryer Description*

There are four veneer dryers at this facility, all of which were manufactured by Coe. These dryers are illustrated in Figure 4.7.2. Dryer no. 4 is a four deck, two zone, twenty section, steam heated, jet dryer. In this dryer, air is circulated across the top of the dryer, through steam coils and down into jet tubes. The jet tubes have holes which direct the hot air onto the surface of the veneer as it passes through the dryer. Dryers 1, 2, and 3 are all six deck steam heated, single section longitudinal dryers. Each of these dryers have a single vent from its heated section and a single vent

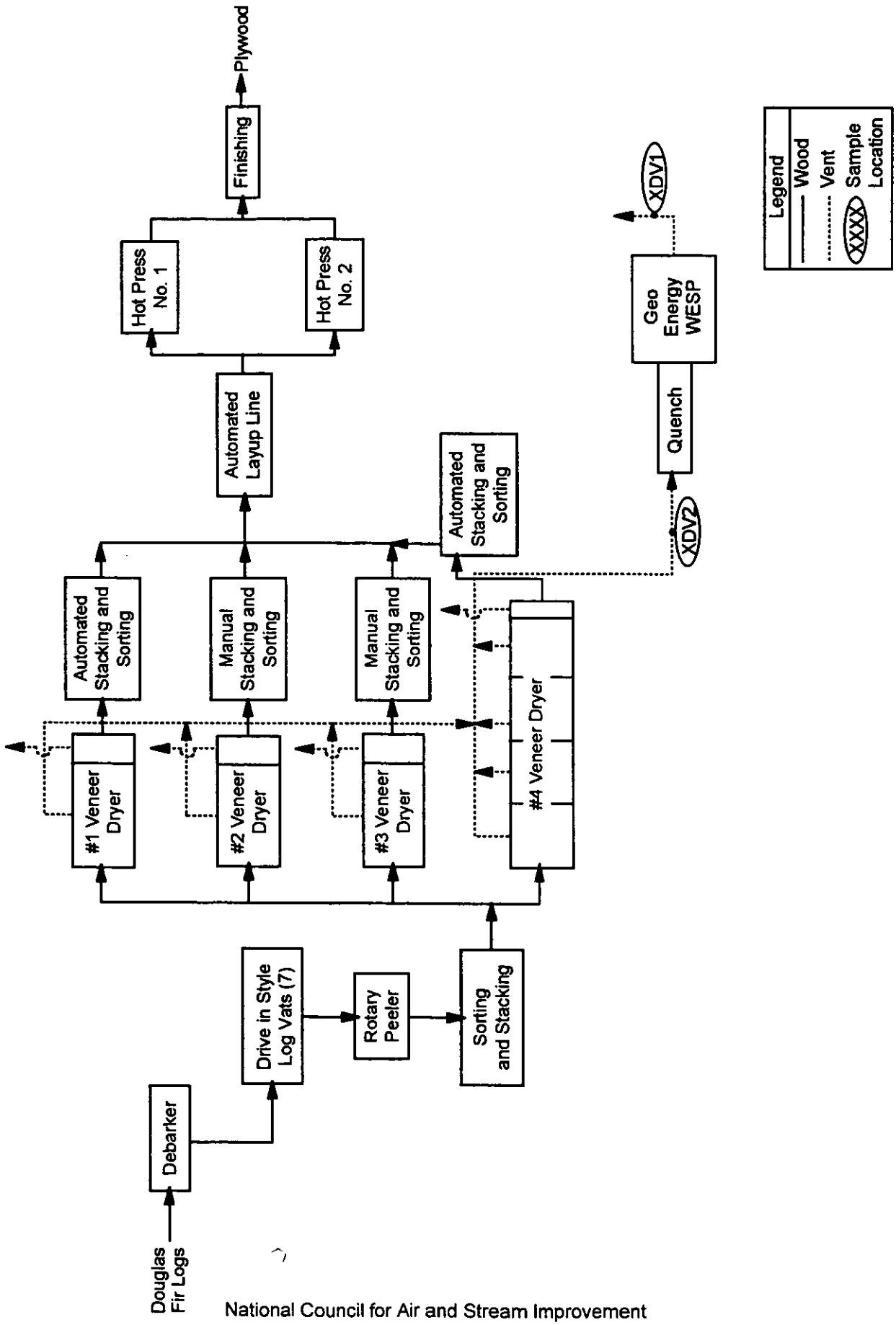

Figure 4.7.1 Overall Process Flow Diagram, Mill 188

Table 4.7.1. Emission Test Program, Mill 188

Unit	Source Code	Source Description	Emission Testing Procedure*			Test Schedule		
			NICM	CO	M25A	Run	Date	Time
Softwood Veneer Dryer	XDV1	WESP Exhaust Fresh Douglas Fir Furnish	X		X	1	5/19/98	1005-1105
			X		X	2	5/19/98	1145-1245
			X		X	3	5/19/98	1350-1450
		WESP Exhaust 7 Day Old Douglas Fir	X		X	4	5/20/98	1115-1215
			X		X	5	5/20/98	1245-1345
			X		X	6	5/20/98	1525-1625
	XDV2	WESP Inlet Fresh Douglas Fir Furnish	X		X	1	5/19/98	1005-1105
			X		X	2	5/19/98	1145-1245
			X		X	3	5/19/98	1350-1450
		WESP Inlet 7 Day Old Douglas Fir	X		X	4	5/20/98	1115-1215
			X		X	5	5/20/98	1245-1345
			X		X	6	5/20/98	1525-1625

*NICM: NCASI Impinger/Canister Method; CO: Bacharach Combustion Analysis; M25A: Modified Method 25A (Total Hydrocarbon Analyzer)

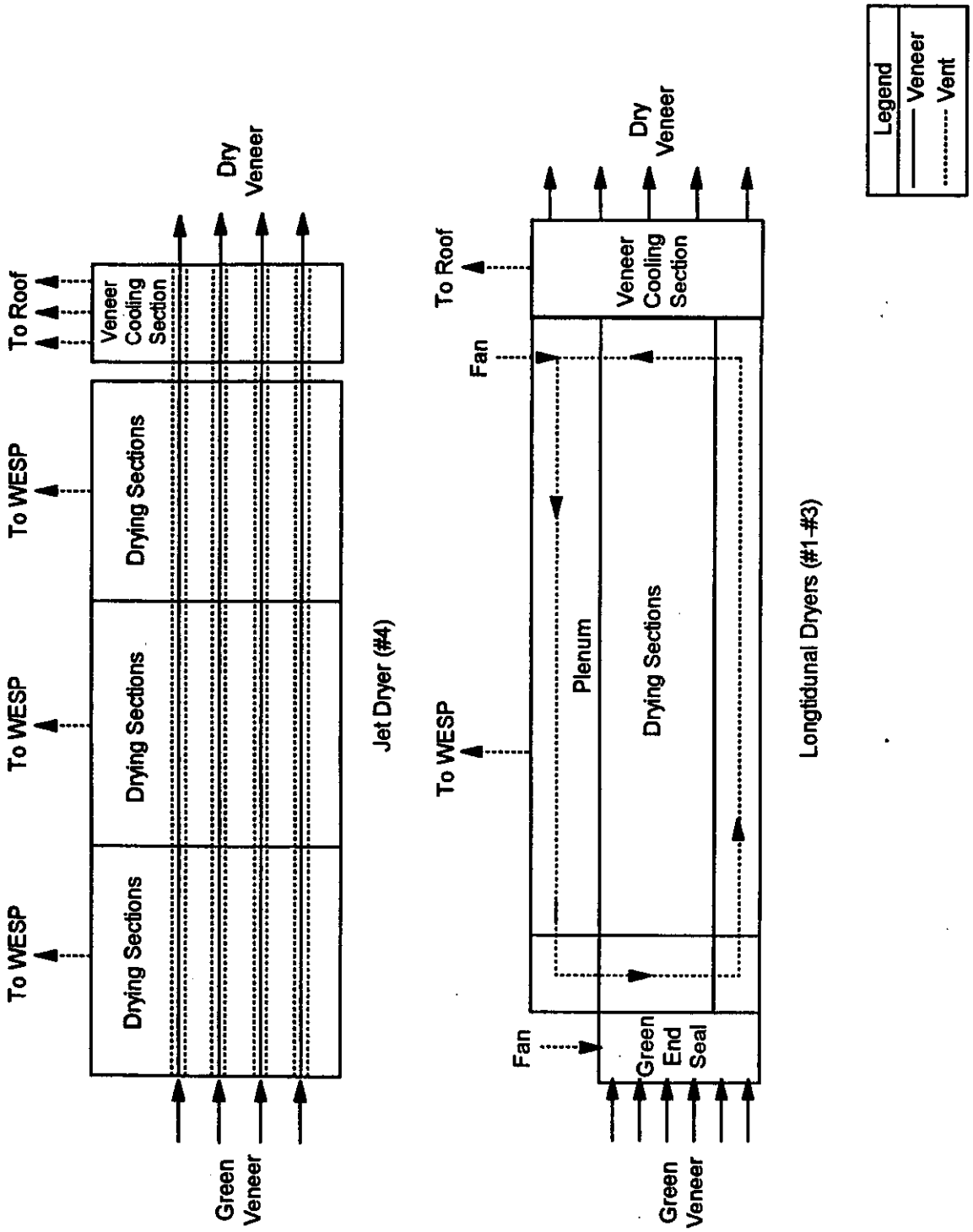

Figure 4.7.2 Softwood Veneer Dryers, Mill 188

from the veneer cooling section. Dryer no. 1 has 15 sections, dryer no. 2 has nine sections, and dryer no. 3 has 12 sections. The exhausts from the cooling section vents are uncontrolled. The heated zone vents from all four dryers are connected to a common header, which serves as an inlet duct for a Geoenergy e-tube-type wet electrostatic precipitator (WESP). The precipitator operating conditions during testing are recorded in Table 4.7.2. Quench sprays are employed to cool the gas stream to adiabatic saturation conditions before it reaches the WESP. The large droplets from the quench sprays and larger particulates are removed in a cyclone, the effluent from which is fed to the skimmer tank. The gas stream exiting the cyclone passes through plates to ensure uniform distribution of airflow to the e-tubes, which contain electrode discs on wires. Entrained fine mist droplets are forced to the tube walls as they flow down past the first disc in the tube, thus creating a continuously wetted tube surface. As the gas stream moves down the tube, past other electrode discs, fine particulates are forced to the tube walls and picked up by the water on the surface, which drains to the ESP sump. Every two hours, approximately 400 gal of fresh water is used to wash down the tube walls. This water drains to the ESP sump. The ESP sump contents are pumped to a skimmer tank, where pitch is removed, and the water is recycled to the quench sprays. Pitch is the term commonly applied to the gummy non-water soluble natural VOC components evaporated from the veneer at dryer temperatures which condense at the lower temperatures in the WESP. Skimmed pitch slides down a chute into a burlap bag. The water recycle system on this precipitator is designed to balance the water evaporated with water added in washing, and does not normally produce an effluent.

Two sampling points were selected to characterize emissions from the veneer drying process. The inlet and outlet of the WESP (XDV2 and XDV1, respectively) were tested simultaneously under two sets of conditions. Three runs were performed while fresh Douglas-fir veneer was dried in all four dryers and three runs were performed while 7 day old Douglas-fir veneer was dried. The 7 day old "aged" veneer stacks, which had been stored outside, had noticeable mold growth on the edges. Because the WESP inlet port was not optimally located for flow measurement, the WESP outlet flows were used to calculate emission rates at the inlet. Table 4.7.3 lists the veneer dryer process operating conditions recorded during the testing.

Table 4.7.2. Process Operating Conditions During Testing of the Electrostatic Precipitator, Mill 188

Source ID	Run No.	Quench Chamber Inlet Temp., °F	Quench Chamber Outlet Temp., °F	Precipitator Voltage, kV		Precipitator Current, mA		DC Peak Voltage, kV		DC Peak Current, mA	
				Side 1	Side2	Side 1	Side 2	Side 1	Side 2	Side 1	Side 2
XDV1, XDV2	1	319	137	46	46	180	246	55	55	172	220
	2	315	142	47	45	240	253	55	58	196	264
	3	313	143	49	47	253	240	57	57	239	260
	4	315	143	46	47	167	185	55	58	167	185
	5	315	143	48	47	207	237	57	59	199	223
	6	314	143	47	46	233	247	57	57	213	232

Table 4.7.3. Process Operating Conditions During Testing of the Softwood Veneer Dryers, Mill 188

Source ID	Run No.	Furnish*	Production Rate, MSF as 3/8"/hr	Veneer Thickness, inches	Target Outlet Moisture, % (wet basis)	Average** Redry, %	Average Dryer Temperature, °F					
										Dryer 4		
							Dryer 1	Dryer 2	Dryer 3	Zone 1	Zone 2	Zone 3
XDV1, XDV2	1	Fresh DF	33.2	1/6	12-14	12	351	328	341	346	371	370
	2	Fresh DF	30.8	1/6	12-14	12	351	331	343	340	360	363
	3	Fresh DF	31.5	1/6	12-14	12	349	329	339	331	356	360
	4	7 Day Old DF	20.2	1/6	12-14	8	350	330	340	341	363	366
	5	7 Day Old DF	20.1	1/6	12-14	8	349	330	342	345	368	364
	6	7 Day Old DF	18.4	1/6	12-14	8	347	331	343	340	363	368

*DF = Douglas Fir

** Percentage of veneer passing through dryer which needed to be redried.

4.8 Process Description and Test Program, Mill 194

Figure 4.8.1 is a schematic representation of the process flow at Mill 194. This mill is located in the southeastern United States and produces approximately 170 million ft^2/year (3/8" basis) of softwood plywood, which has between three and five plies and ranges in thickness from 1/2" to 3/4". Southern pine is the primary furnish at this facility. Production is scheduled 24 hours a day, 7 days a week, 52 weeks per year, excluding maintenance downtime.

Logs are stored in the log yard prior to debarking and steaming. In the summertime, water sprays are employed to minimize checking. After debarking, the logs are cut to length and loaded into one of three drive-in log steaming vats. Each of these vats has a capacity of approximately 200 MSF (3/8" basis), and one vat is opened every 8 hours. As warm water is added to the vats, the log blocks slowly heat to a temperature slightly above the desired peeling temperature (approximately 110°F). Once they are removed from the vats, the preheated blocks are placed in bins which feed a single rotary peeler or lathe. The resulting green veneer is clipped, sorted and stacked. Green trim is chipped and sold. The resulting stacks of green veneer sheets are then transported to one of two dryers. One of these dryers is a four deck, steam heated, two zone jet dryer in which air is circulated perpendicular to the direction of veneer flow. No zone to zone air recirculation is practiced in this dryer. The other dryer is a four deck, gas fired, cross-circulation dryer with four heated sections, each of which contains a burner. In this dryer, air is also circulated perpendicular to the veneer flow.

Individual sheets of veneer are transported into the "green end" of each veneer dryer. In this section of the dryer, the primary purpose is to heat the veneer to effect drying. These hot sheets then pass into the "dry end" of the dryer, which functions to reduce the moisture in the veneer sheets to a target moisture content that depends upon the type of veneer being dried. Face veneer, which is usually dried in the gas dryer, is dried to a target moisture of 10-12% (dry basis). Core veneer, most often dried in the steam dryer, is dried to a target moisture of 4-6% (dry basis). The dried sheets then pass through a veneer cooling section, which functions to reduce the temperature in the wood. As the sheets emerge from the veneer cooling section, they are sorted and stacked. Vent emissions from the two veneer dryers at this facility are collected and fed to a regenerative catalytic oxidizer (RCO).

Stacks of dried veneer are transported to four spreaders, where glue is applied to the veneer sheets. Plywood is assembled on manual composers from alternating layers of veneer and glue and stacked. The stacks of glued sheets are then conveyed to one of two press lines. On the press line, a prepress compresses the stack for a sufficient time period to allow the glued veneer sheets to adhere to one another. The resulting stacks of plywood then move to a hot press, where plywood sheets are individually fed into the loader. These sheets then pass into the open press, which subsequently closes. When the hot press opens, a load of hot plywood passes to the unloader and new sheets are loaded. The stack of unloaded plywood is moved to finishing, where the sheets are individually trimmed to size and packaged for transport.

Table 4.8.1 summarizes the test plan at Mill 194, including process units tested, sources associated with each unit, sampling and analytical procedures used, and the test schedule.

4.8.1 *Softwood Veneer Dryer Description*

The two veneer dryers at this facility are diagrammed in Figure 4.8.2. Each of these dryers has four decks. One of these dryers (referred to as no. 1 by the mill) is a gas fired, cross-circulation dryer with four heated sections, each of which contains a burner. Dryer no. 1 has a single exhaust vent from the preheat section, three exhaust vents from its veneer cooling section and is used primarily

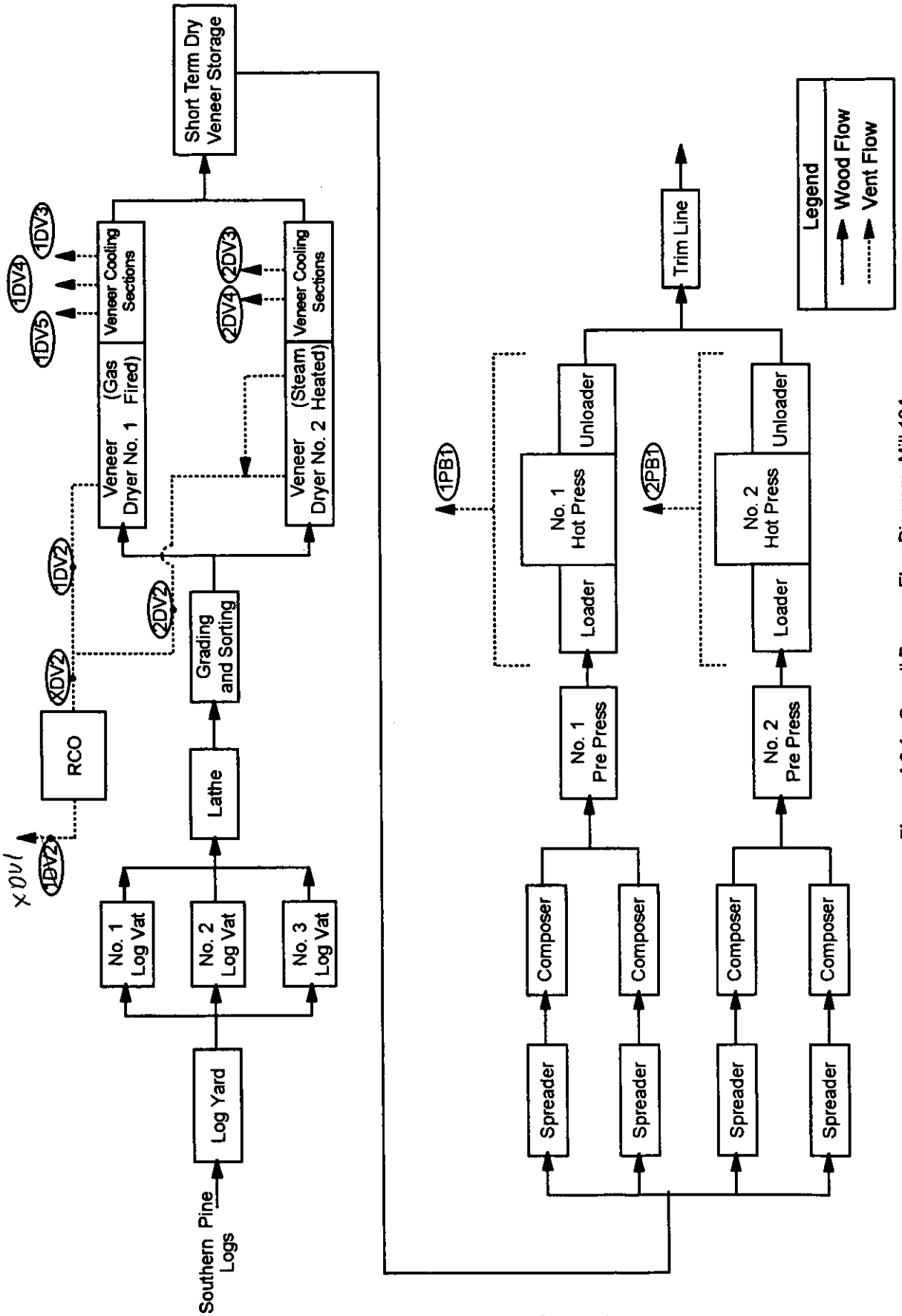

Figure 4.8.1 Overall Process Flow Diagram, Mill 194

Table 4.8.1. Emission Test Program, Mill 194

Unit	Source Code	Source Description	Emission Testing Procedure*			Test Schedule		
			NICM	CO	M25A	Run	Date	Time
Softwood Veneer Dryer	1DV2	No. 1 Dryer Exhaust prior to RCO	X	X	X	1	11/12/97	1153-1253
			X	X	X	2	11/12/97	1400-1500
			X	X	X	3	11/12/97	1550-1650
	1DV3	No. 1 Dryer, Veneer Cooling Section Exhaust No. 3	X	X		1	11/13/97	1053-1153
			X	X		2	11/13/97	1335-1435
			X	X	X	3	11/13/97	1524-1624
	1DV4	No. 1 Dryer, Veneer Cooling Section Exhaust No. 2	X	X	X	1	11/13/97	1053-1153
			X	X	X	2	11/13/97	1335-1435
			X	X		3	11/13/97	1524-1624
	1DV5	No. 1 Dryer, Veneer Cooling Section Exhaust No. 1	X	X	X	1	11/13/97	1053-1153
			X	X	X	2	11/13/97	1335-1435
			X	X	X	3	11/13/97	1524-1624
	2DV2	No. 2 Dryer Exhaust prior to RCO	X		X	1	11/12/97	1153-1253
			X	X	X	2	11/12/97	1400-1500
			X	X	X	3	11/12/97	1550-1650
	2DV3	No. 2 Dryer, Veneer Cooling Section Exhaust No. 2	X	X		1	11/11/97	1322-1422
			X	X		2	11/11/97	1540-1640
			X	X		3	11/11/97	1730-1830
	2DV4	No. 2 Dryer, Veneer Cooling Section Exhaust No. 1	X	X		1	11/11/97	1322-1422
			X	X		2	11/11/97	1540-1640
			X	X		3	11/11/97	1730-1830
	XDV1	RCO Outlet	X	X	X	1	7/15/98	1025-1125
			X	X	X	2	7/15/98	1240-1340
			X	X	X	3	7/15/98	1515-1615
	XDV2	Combined Dryer Exhaust prior to RCO	X	X	X	2	7/15/98	1025-1125
			X	X	X	3	7/15/98	1240-1340
			X	X	X	4	7/15/98	1515-1615
Softwood Plywood Hot Press	1PB1	Unpowered Vent Above No. 1 Press	X		X	1	11/11/97	1205-1305
			X		X	2	11/11/97	1433-1533
			X		X	3	11/11/97	1618-1718
Softwood Plywood Hot Press	2PB1	Powered Vent Above No. 2 Press	X		X	1	11/11/97	1202-1302
			X		X	2	11/11/97	1430-1530
			X		X	3	11/11/97	1615-1715

*NICM: NCASI Impinger/Canister Method; CO: Bacharach Combustion Analysis; M25A: Modified Method 25A (Total Hydrocarbon Analyzer)

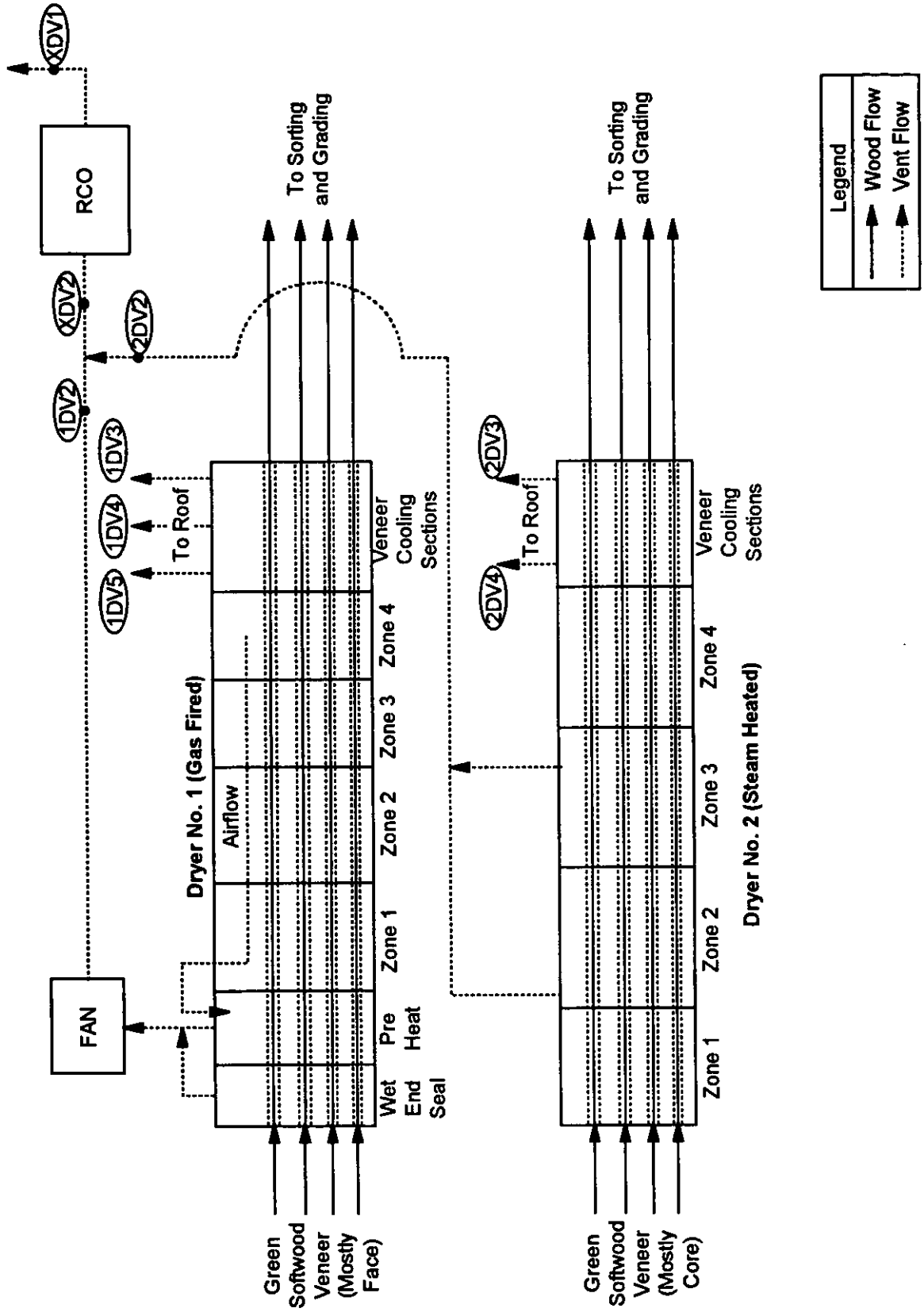

Figure 4.8.2 Veneer Dryers, Mill 194

to dry face veneer. The other dryer (referred to as no. 2 by the mill) is a steam heated jet dryer in which air is circulated perpendicular to the direction of veneer flow. A jet dryer is a cross-circulation dryer which circulates air through a heat exchanger in the top of the dryer and forces that heated air down into jet tubes. Flow from these jet tubes passes out through holes perpendicular to the surface of the veneer passing through the dryer. No zone to zone air recirculation is practiced in this dryer. Dryer no. 2 has one exhaust vent from each of its two heated zones, two exhaust vents from its veneer cooling section and is used primarily to dry core veneer.

Dryers no. 1 and no. 2 each have their own dry veneer handling system. Exhaust gases from the heated zones of these two dryers are collected and fed to a regenerative catalytic oxidizer (RCO), which is designed to efficiently oxidize the organic compounds contained in the gas stream. The two chamber RCO is diagrammed in Figure 4.8.3. The combined hot exhaust gases from the two veneer dryers enter the RCO through an inlet manifold and valving mechanism to one of the two chambers. The chambers are packed with a ceramic heat exchange matrix. A bed of platinum coated bauxite sits on top of this matrix and serves as a catalyst. The veneer dryer exhaust gases are heated as they pass through the heat exchange matrix, and then burn as they pass through the catalyst bed to the combustion chamber, which is maintained at 800°F by a natural gas burner. The gas stream then passes (in reverse direction) through the other packed chamber, giving up approximately 93% of its thermal energy to the heat exchange matrix in that chamber. The gases are then drawn through an exhaust manifold and outlet valve mechanism to the stack. Flow is reversed through the chambers every three minutes. This allows the heat captured in the "outlet" chamber to be used to preheat the veneer dryer exhaust gases.

Seven sampling points were selected to characterize emissions from the veneer drying process. The veneer cooling section exhausts from veneer dryer no. 1 (1DV3, 1DV4 and 1DV5) were simultaneously tested on one day and those from dryer no. 2 (2DV3, 2DV4) were simultaneously tested on another. On a third day, the outlets from the heated zones of the two veneer dryers (1DV2 and 2DV2) were tested simultaneously. Each test consisted of three runs.

Two sampling points were selected to characterize RCO performance. The RCO outlet (XDV1) and the combined dryer exhaust from the two veneer dryers at the inlet to the RCO (XDV2) were tested simultaneously. Four sampling runs were conducted, but because of THC data quality problems, run number 1 was discarded. Table 4.8.2 lists some of the process operating conditions recorded during the testing of the veneer dryer. Table 4.8.3 lists operating conditions during testing of the RCO.

To examine the possibility that natural gas leakage from burners in the gas-fired veneer dryer (1DV2) was contributing to total VOC emissions, selected canisters were analyzed for methane, ethane, propane, butane, and hexane. The results of these analyses are presented in Section 5, Table 5.8.5. RCO destruction efficiencies for VOC, discussed later in this report, are adjusted for methane.

4.8.2 *Softwood Plywood Hot Press Description*

The layup line and hot press area at this mill are illustrated in Figure 4.8.4. On each of the four manual layup lines, dried veneer is passed through a glue spreader and then stacked on a composer. The composed plywood sheets are stacked 36 high, and then conveyed to one of two hot press lines. Hot press no. 1 has 36 openings and was manufactured by Williams-White. Press no. 2 also has 36 openings and was manufactured by SparTek. On each of the hot press lines the stacks are compressed in a prepress to bond the layers of veneer together. Plywood sheets are then individually loaded into the hot press loader and subsequently fed into the hot press, which closes and begins to heat. Press temperatures, pressures and times vary with type of plywood produced. Table 4.8.4 lists some press process operating conditions recorded during testing. Most visible emissions from the

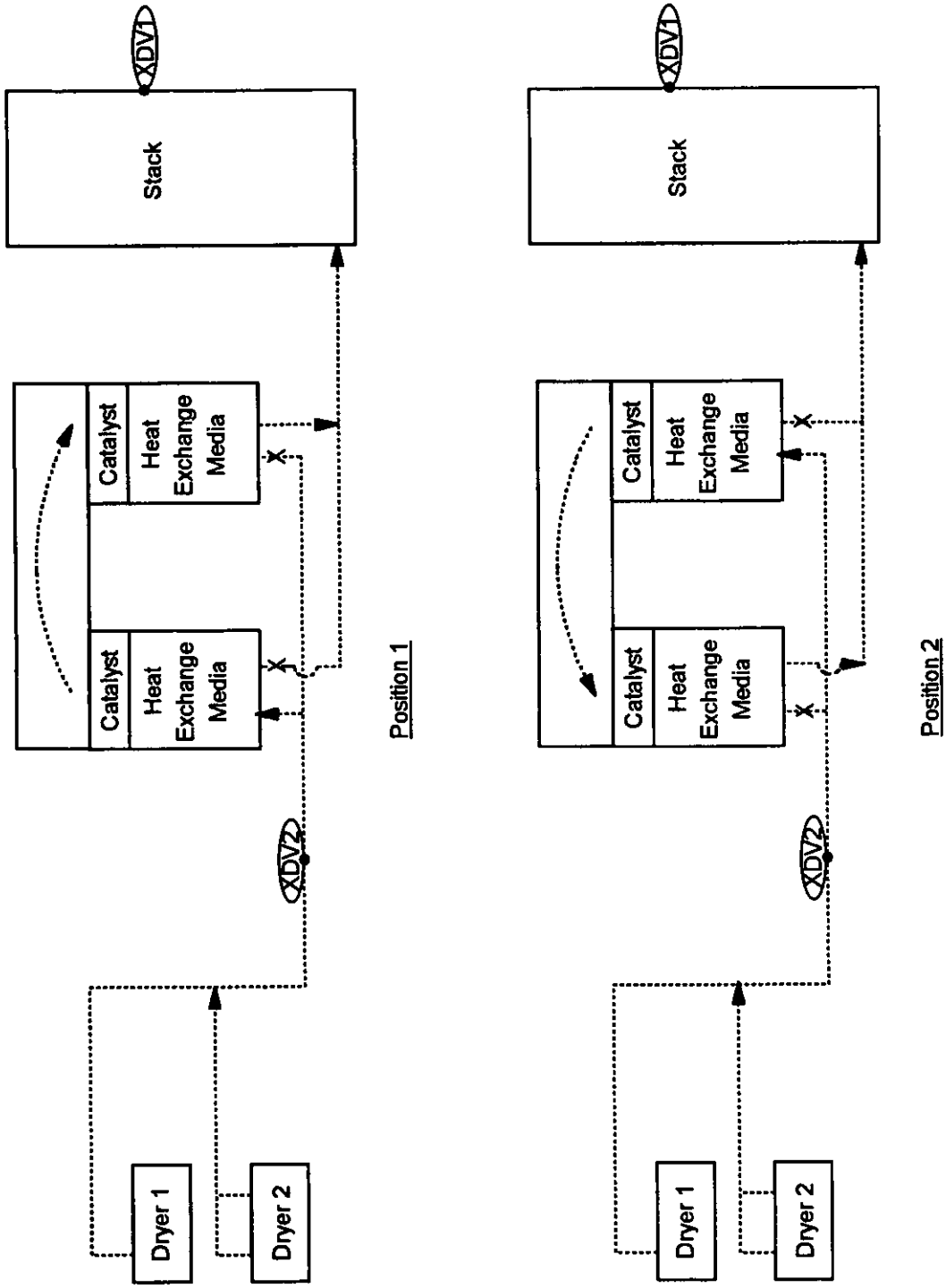

Figure 4.8.3 Regenerative Catalytic Oxidizer Process Flow, Mill 194

Table 4.8.2. Process Operating Conditions During Testing of the Softwood Veneer Dryers, Mill 194

Source ID	Run No.	Furnish*	Production Rate (MSF as 3/8"/hr)	Veneer Thickness (inches)	Veneer Type	Target Outlet Moisture, % (wet basis)	Average Drying Time (min)	Down Time (min)	Average Redry (%)**	Average Dryer Green End Temp. (°F)	Average Dryer Dry End Temp. (°F)
1DV2	1	SYP	18.0	1/7	face	10-12	6.9	3.0	10.1	430	380
	2		19.3	1/7	face	10-12	7.0	0	17.2	430	375
	3		19.1	1/7	face	10-12	7.0	0	10.5	430	375
2DV2	1	SYP	11.6	1/7	core	4-6	9.6	0	6.6	380	380
	2		11.1	1/7	core	4-6	10.0	0	8.5	380	380
	3		11.8	1/7	core	4-6	10.0	0	4.1	380	380
1DV3,	1	SYP	18.7	1/7	face	10-12	7.0	0	5.9	380	385
1DV4,	2		19.9	1/7	face	10-12	7.5	5.0	5.0	380	380
1DV5	3		17.9	1/7	face	10-12	7.1	0	4.3	370	370
2DV3,	1	SYP	12.2	1/7	core	4-6	9.4	0	7.1	430	385
2DV4	2		12.1	1/7	core	4-6	9.4	0	8.8	430	370
	3		7.6	1/7	face	10-12	9.6	35.7	8.9	435	380
XDV1	2	SYP	15.3 (D1)	1/7	face (D1)	10-12 (D1)	6.8 (D1)	0 (D1)	14.3 (D1)	432 (D1)	380 (D1)
			11.4 (D2)	1/7	core (D2)	4-6 (D2)	9.3 (D2)	0.5 (D2)	11.5 (D2)	381 (D2)	385 (D2)
XDV2	3		17.6 (D1)	1/7	face (D1)	10-12 (D1)	7.2 (D1)	0.5 (D1)	7.7 (D1)	430 (D1)	382 (D1)
			9.2 (D2)	1/7	core (D2)	4-6 (D2)	9.2 (D2)	2.0 (D2)	4.2 (D2)	385 (D2)	395 (D2)
	4		16.0 (D1)	1/7	face (D1)	10-12 (D1)	7.1 (D1)	0 (D1)	12.7 (D1)	412 (D1)	375 (D1)
			11.3 (D2)	1/7	face (D2)	10-12 (D2)	9.3 (D2)	0.5 (D2)	6.6 (D2)	383 (D2)	397 (D2)

*SYP = Southern Yellow Pine

**Amount of veneer exiting dryer which needed to be redried

D1 = Dryer No. 1

D2 = Dryer No. 2

Table 4.8.3. Process Operating Conditions of the Regenerative Catalytic Oxidizer, Mill 194

Source ID	Run No.	Production Rate (MSF as 3/8"/hr)		Combustion Chamber Temp. (°F)	Static Pressure at RCO Inlet (in H_2O)	RCO Inlet Temp. (°F)	RCO Outlet Temp. (°F)
		Dryer 1	Dryer 2				
XDV1, XDV2	2	15.3	11.4	904	-4.0	292	353
	3	17.6	9.2	897	-4.1	292	352
	4	16.0	11.3	920	-3.8	291	365

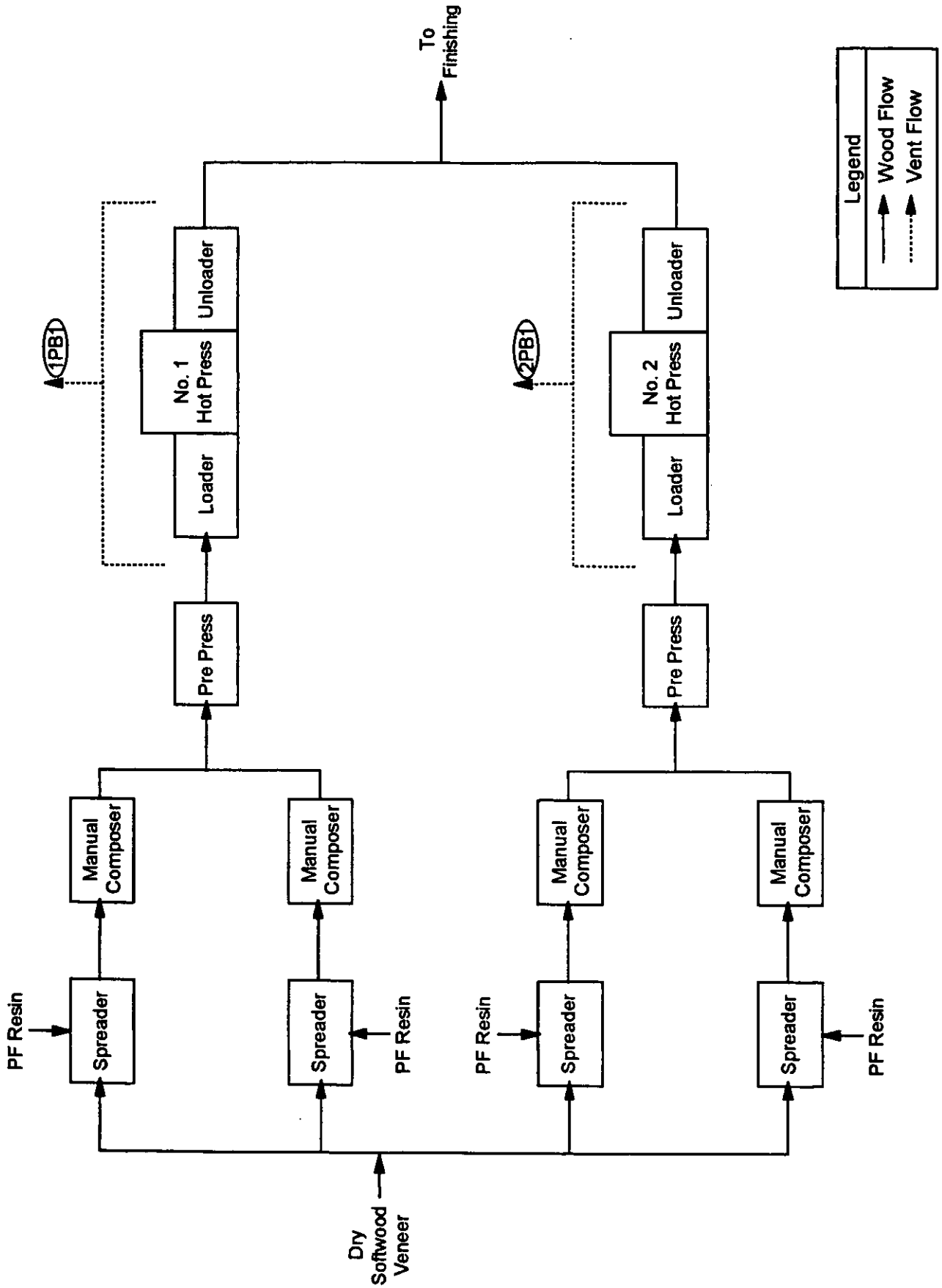

Figure 4.8.4 Hot Presses, Mill 194

Table 4.8.4. Process Operating Conditions During Testing of the Softwood Hot Presses, Mill 194

Source ID	Run No.	Production Rate, MSF 3/8"/hr	No. of Plies	Board Thickness, inches	Furnish (Face/Core)*	Resin Type**	No. of Glue Lines	Press Temperature, °F	Press Time, min
1PB1	1	15.9	5	3/4	SYP	PF	4	305-309	6-10
	2	9.1	5	3/4	SYP	PF	4	305-308	6-10
	3	18.2	5	3/4	SYP	PF	4	303	6-10
2PB1	1	15.9	5	3/4	SYP	PF	4	301-319	6-10
	2	11.3	5	3/4	SYP	PF	4	310-319	6-10
	3	13.8	5	3/4	SYP	PF	4	299-313	6-10

*SYP = Southern Yellow Pine
**PF = Phenol Formaldehyde

hot press area occur when the presses open and unload the hot plywood sheets. Emissions from both hot press areas were measured. The emissions from press no. 1 rise to a single vent, which is normally fan driven. At the beginning of testing, however, it was discovered that this fan was non-functional. Since many plywood mills turn off press area roof fan vents during the winter, a decision was made to test the no. 1 press vent (1PB1) with only convective flow. During testing, the nearest powered roof vent was shut down and covered to help prevent loss of emissions. The emissions from hot press no. 2 are collected by a single powered vent (2PB1).

4.9 Process Description and Test Program, Mill 400

Figure 4.9.1 is a schematic representation of the process flow at Mill 400. This mill is located in the Midwestern United States and slices and dries approximately 2.2 million ft^2/day of hardwood veneer. Normally, veneer sheets produced for domestic use are 1/36 inch thick and veneer sheets produced for export use are 1/46 inch thick. A range of other veneer thicknesses (from 1/100 inch to 1/8 inch) can also be produced at this facility. The only glues used are those applied during hand patching of defects in dried sheets. The primary species used as furnish at this mill are white oak, red oak, cherry, maple and walnut. Approximately 30% of the production is cherry, 25% is white oak, and 15% each are maple, red oak and walnut. Approximately 60% of the product from this facility is exported.

Logs selected for veneer production are stored in the log yard prior to debarking. Water sprays are employed to eliminate stain fungus and to minimize checking. After debarking, the logs are fed to a saw mill, where they are cut into 8 to 12 foot sections which are called flitches. These flitches are stored in the log yard until approximately 24 hours before they are needed. At this time the flitches are immersed in heated log vats for a fixed period of time, which is determined by the species of wood. The soaked logs are placed on one of five slicers for processing. The resulting stacks of green sliced veneer sheets are then transported to one of seven dryers. The individual sheets are hand fed to a vacuum table which transports them into the first section of the veneer dryer, which is intended primarily to bring the sheets to a fixed temperature. These hot sheets then pass into the second section of the dryer which functions to reduce the moisture in the veneer sheets to a target moisture content of 12% (wet basis). The dried sheets then pass through a veneer cooling section, which functions to equilibrate the moisture and temperature in the wood. As the sheets emerge from the veneer cooling section, they are hand stacked, either on pallets or in crates. Domestic market veneer is crated and sent to the domestic warehouse for distribution. Export market veneer is palletized, banded, and stored on the production floor. This veneer is subsequently clipped, measured and sorted by grade prior to packaging and distribution. A packaging press is used to press approximately 3% of the veneer produced at this mill. Pressing flattens buckled veneer and slightly reduces moisture. Veneer is rarely redried, and no redry was processed during this study.

The exhaust gases from the dryers at this facility are uncontrolled. Table 4.9.1 summarizes the test plan at Mill 400, including process units tested, sources associated with each unit, sampling and analytical procedures used, and the test schedule. No process liquid samples were collected in conjunction with this emission testing.

4.9.1 *Hardwood Veneer Dryers, Mill 400*

There are seven veneer dryers at this facility. All of these dryers have two heated zones, utilize indirect steam heat, and are jet dryers. Jet dryers are cross-circulation dryers (that is, air is circulated perpendicular to the direction of veneer transport through the dryer). In these dryers air is heated as it is circulated in the top of the dryer and is subsequently fed into jet tubes which direct air through holes onto the veneer as it moves through the dryer. Six of the dryers are Babcock serpentine style dryers and are functionally identical, except for the common ducting of dryers 5 and 6. Green veneer is held flat between two stainless steel screens as it passes through Zone 1 (the green end) of the dryer. Five sequential fans circulate the air in the dryer through steam fed radiators into jet tubes. Hot air passes through holes onto the face of the passing veneer. As the veneer passes to the second zone of the dryer (the dry end), it passes over and under rolls as four sequential fans circulate air through heaters and jet tubes. Dried veneer from this section is fed to a veneer cooling section, which circulates cool air over the veneer to equilibrate the moisture and temperature in the sheets.

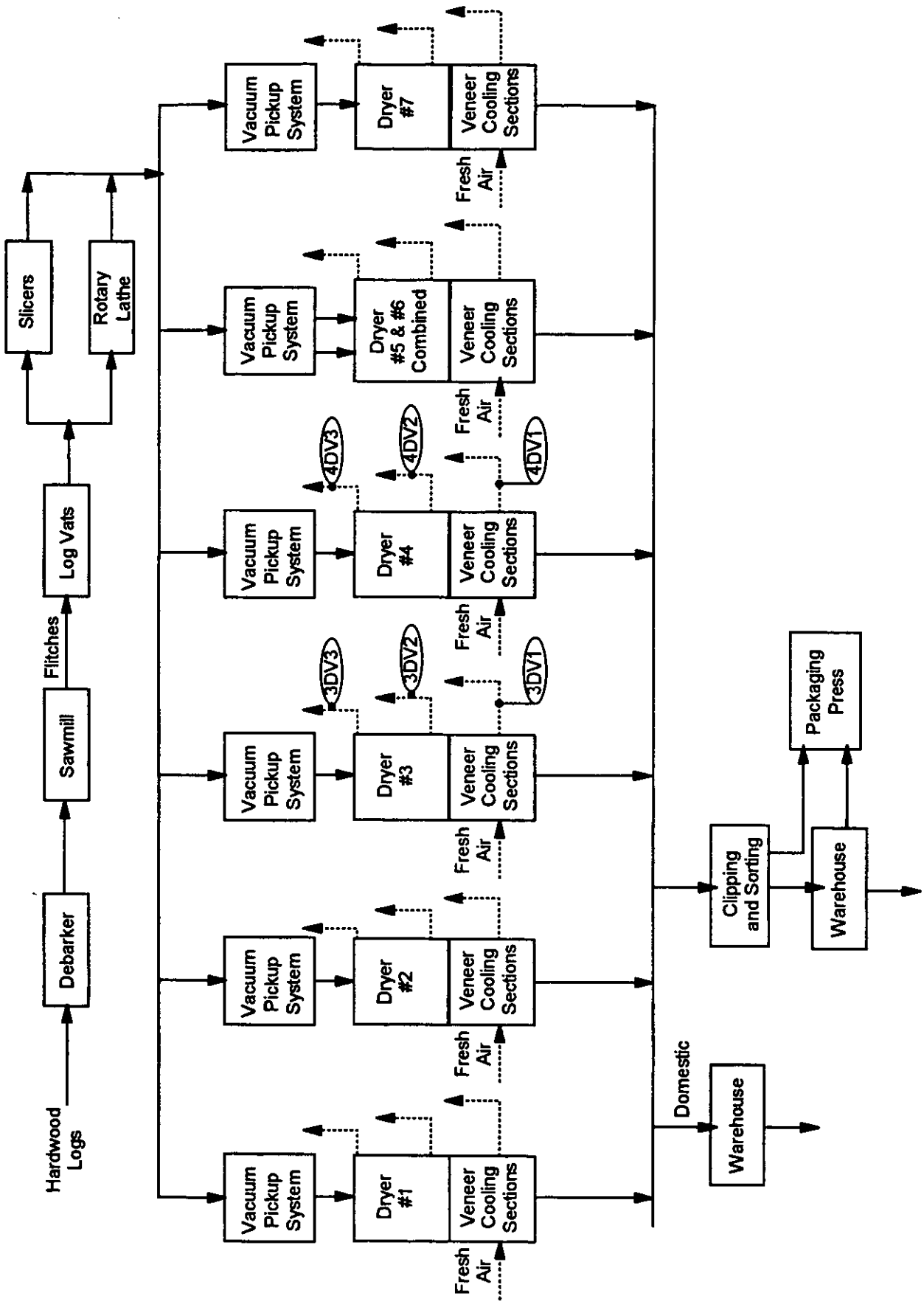

Figure 4.9.1 Overall Process Flow Diagram, Mill 400

Table 4.9.1. Emission Test Program, Mill 400

Unit	Source Code	Source Description	Emission Testing Procedure*		Test Schedule		
			NICM	M25A	Run	Date	Time
Hardwood Veneer Dryer No. 3, White Oak Furnish	3DV1	Dryer No. 3, Veneer Cooling Section Outlet Vent	X		1	5/28/97	1000-1057
			X	X	2	5/28/97	1230-1330
			X		3	5/28/97	1505-1536
	3DV2	Dryer No. 3, Dry End Vent	X	X	1	5/28/97	1001-1057
			X		2	5/28/97	1230-1330
			X	X	3	5/28/97	1505-1533
	3DV3	Dryer No. 3, Green End Vent	X	X	1	5/28/97	1000-1056
			X	X	2	5/28/97	1230-1330
			X	X	3	5/28/97	1505-1534
Hardwood Veneer Dryer No. 3, Cherry Furnish	3DV1	Dryer No. 3, Veneer Cooling Section Outlet Vent	X		4	5/29/97	0920-1020
			X	X	5	5/29/97	1215-1315
			X	X	6	5/29/97	1445-1545
	3DV2	Dryer No. 3, Dry End Vent	X	X	4	5/29/97	0920-1020
			X	X	5	5/29/97	1215-1315
			X	X	6	5/29/97	1445-1545
	3DV3	Dryer No. 3, Green End Vent	X	X	4	5/29/97	0920-1020
			X		5	5/29/97	1215-1315
			X		6	5/29/97	1445-1545
Hardwood Veneer Dryer No. 4, Red Oak Furnish	4DV1	Dryer No. 4, Veneer Cooling Section Outlet Vent	X		1	5/30/97	0935-1035
			X	X	2	5/30/97	1220-1320
			X		3	5/30/97	1435-1535
	4DV2	Dryer No. 4, Dry End Vent	X	X	1	5/30/97	0935-1035
			X	X	2	5/30/97	1220-1320
			X	X	3	5/30/97	1435-1535
	4DV3	Dryer No. 4, Green End Vent	X	X	1	5/30/97	0935-1035
			X	X	2	5/30/97	1220-1320
			X	X	3	5/30/97	1435-1535

*NICM: NCASI Impinger/Canister Method
M25A: Modified Method 25A (Total Hydrocarbon Analyzer)

This cooled veneer is then stacked and packaged. Both dryers tested (nos. 3 and 4) at this facility were of this type. Figure 4.9.2 is an illustration of these dryers.

Dryer no. 7, which was not tested, is a "true press" style jet dryer. The primary functional difference between this dryer and the other six at this mill is the route veneer follows through the two zones. In a "true press" dryer, the veneer passes around rolls in both dryer zones, giving a longer path in a shorter dryer. The air circulation pattern and moisture control strategy in this dryer are similar to those in the other six dryers.

Air is not recirculated from one zone to another in any of the seven dryers at this facility. Dampers control the air flow from the vents of these dryers. Each dryer zone has one vent, and the veneer cooling section has as inlet and outlet.

The sampling strategy followed during this study was to collect simultaneous vent samples from all of the vents on a single dryer while a selected furnish was dried. The three furnishes chosen for testing were white oak, red oak and cherry. Three sampling runs were conducted during sampling on each furnish. Table 4.9.2 summarizes the process operating conditions during testing.

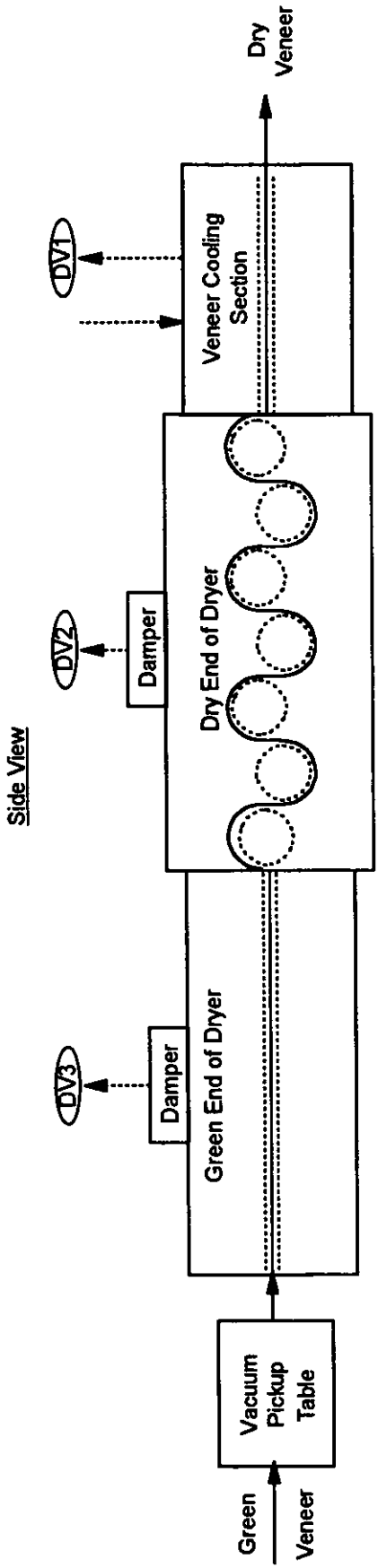

Figure 4.9.2 Hardwood Veneer Dryer, Mill 400

Table 4.9.2. Process Operating Conditions During Testing of Hardwood Veneer Dryers, Mill 400

Source ID	Run No.	Furnish	Production Rate, MSF/hr	Veneer Thickness, inches	Target Outlet Moisture, % (wet basis)	Average Green End Temperature, °F	Average Dry End Temperature, °F
3DV1-3DV3	1	White Oak	18.2	1/46	12	266	284
	2		19.2			267	285
	3		21.2			254	271
3DV1-3DV3	4	Cherry	29.3	1/46	12	268	288
	5		26.7			263	285
	6		27.4			265	287
4DV1-4DV3	1	Red Oak	17.6	1/36	12	320	340
	2		16.4			321	340
	3		19.1			321	340

4.10 Process Description and Test Program, Mill 401

Figure 4.10.1 is a schematic representation of the process flow at Mill 401, which is located in the Midwestern United States and slices and dries approximately 875,000 ft^2/day of hardwood veneer. Normally, veneer sheets produced for domestic use are 1/36 inch thick, and veneer sheets produced for export are 1/42 to 1/50 inch thick. No adhesives are used at this facility. The primary species processed at this mill are white oak, red oak, cherry, maple and walnut. Approximately 25% of the production is cherry, 34% is white oak, 20% is red oak, 14% is maple, and 7% is walnut. Approximately 85% of the product from this facility is exported.

Logs selected for veneer production are stored in the log yard prior to debarking. During the summer, wax is sprayed on the log ends, and water sprays are employed to minimize checking. After debarking, the logs are fed to a saw mill, where they are cut into 8 to 12 foot sections which are called flitches. These flitches are immersed in heated log vats for a fixed period of time, which is determined by the species of wood, and ranges from 24 to 120 hours. The soaked logs are placed on one of three slicers for processing. Two of these slicers are vertical slicers, and the third is a half-round slicer. The resulting veneer sheets are stacked and then transported to one of three dryers. The individual sheets are hand fed to a vacuum table and transported into the first section of the veneer dryer, which is intended primarily to bring the sheets to a fixed temperature. These hot sheets then pass into the second section of the dryer which functions to reduce the moisture in the veneer sheets to a target of 12-14%. The dried sheets then pass through a cooling section, which functions to equilibrate the moisture and temperature in the wood. As the sheets emerge from the cooling section, they are hand stacked, either on pallets or in crates.

Domestic market veneer is crated, and samples are pulled for pricing. Export market veneer is palletized and sent to the defect clipping line, where the edges and ends are trimmed and the veneer is priced. Veneer is rarely redried, and no redry was processed during this study. The exhaust gases from the dryers at this facility are uncontrolled. Table 4.10.1 summarizes the test plan at Mill 401, including process units tested, sources associated with each unit, sampling and analytical procedures used, and the test schedule. No process liquid samples were collected in conjunction with this emission testing.

4.10.1 Hardwood Veneer Dryers, Mill 401

There are three veneer dryers at this facility. All of these dryers have two zones, utilize indirect steam heat, and are jet dryers. Jet dryers are cross-circulation dryers (that is, air is circulated perpendicular to the direction of veneer transport through the dryer). In these dryers, air is heated as it is circulated in the top of the dryer and is subsequently fed into jet tubes which direct air through impingements onto the veneer as it moves through the dryer. Two of these dryers (including no. 1, which was tested in this study) are Cremona-Figilio dryers with an Omega shaped veneer path. Dryer no. 2 at this facility, which was also tested, is a Keller/Cremona with an S-shaped veneer path in the heating section and an Omega shaped path in the cooling section. In all three dryers green veneer is held between two stainless steel screens as it passes through the dryer. Five fans circulate the air in the dryer through steam fed radiators into jet tubes. Hot air passes through impingements onto the face of the passing veneer. Dried veneer is fed to a cooling section, which circulates cool air over the veneer to equilibrate the moisture and temperature in the sheets. This cooled veneer is then stacked and packaged. Figure 4.10.2 is an illustration of these dryers.

Air is not recirculated from one zone to another in any of the three dryers at this facility. Dampers control the airflow from the vents of these dryers. Each dryer zone has one vent, and the board cooling section has an inlet and outlet.

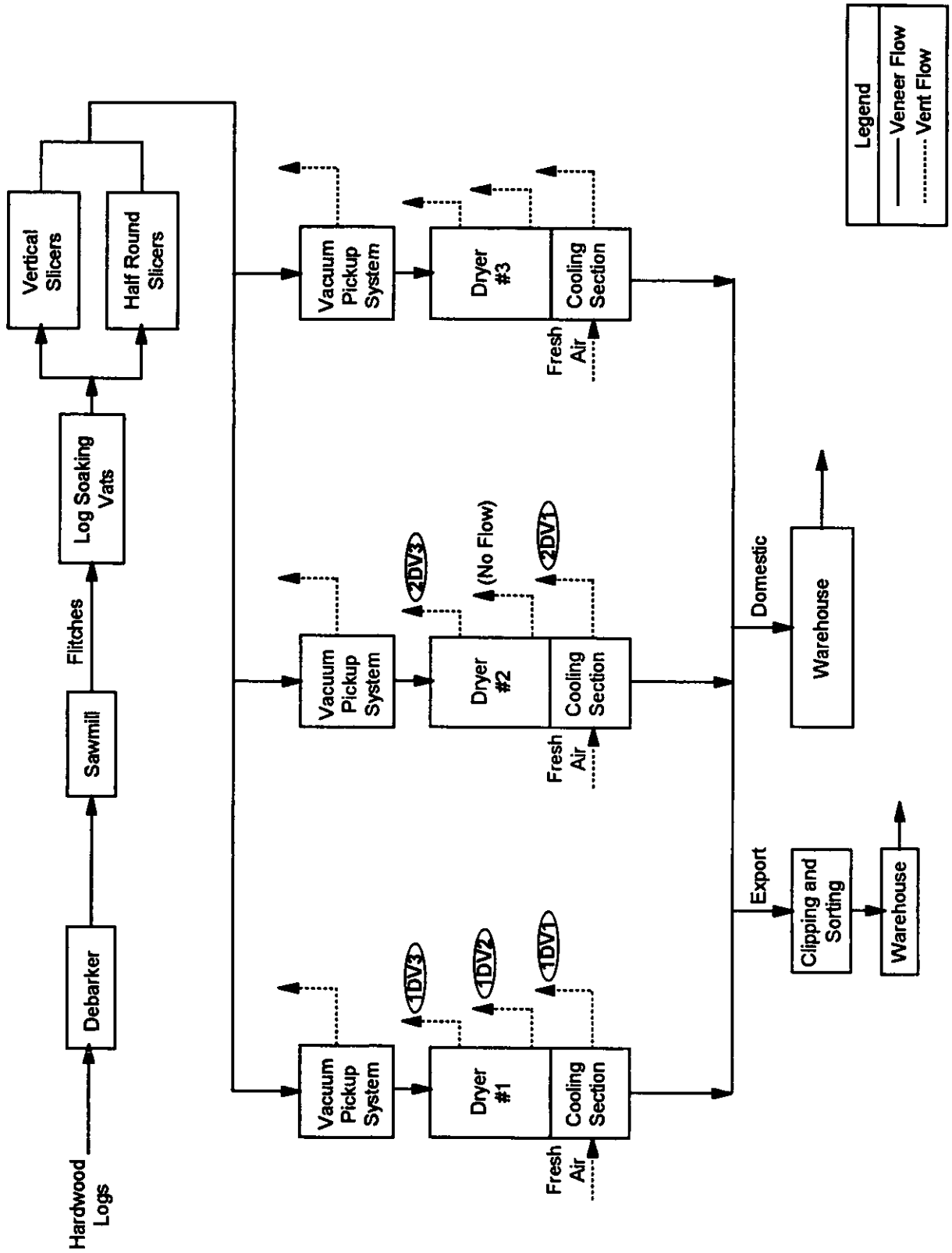

Figure 4.10.1 Overall Process Flow Diagram, Mill 401

Table 4.10.1. Emission Test Program, Mill 401

Unit	Source Code	Source Description	Emission Testing Procedure*			Test Schedule		
			NICM	CO	M25A	Run	Date	Time
Hardwood Veneer Dryer No. 1, Red Oak Furnish	1DV1	Dryer No. 1, Veneer Cooling Section Outlet Vent	X			1	6/2/97	939-1039
			X			2	6/2/97	1250-1335
			X			3	6/2/97	1425-1500
	1DV2	Dryer No. 1, Dry End Vent	X		X	1	6/2/97	938-1038
			X		X	2	6/2/97	1250-1335
			X		X	3	6/2/97	1425-1500
	1DV3	Dryer No. 1, Green End Vent	X		X	1	6/2/97	938-1038
			X		X	2	6/2/97	1250-1335
			X		X	3	6/2/97	1425-1500
Hardwood Veneer Dryer No. 1, White Oak Furnish	1DV1	Dryer No. 1, Veneer Cooling Section Outlet Vent	X			4	6/3/97	732-832
			X			5	6/3/97	935-1035
			X			6	6/3/97	1309-1409
	1DV2	Dryer No. 1, Dry End Vent	X		X	4	6/3/97	732-832
			X		X	5	6/3/97	935-1035
			X		X	6	6/3/97	1309-1409
	1DV3	Dryer No. 1, Green End Vent	X		X	4	6/3/97	732-832
			X		X	5	6/3/97	935-1035
			X		X	6	6/3/97	1309-1409
Hardwood Veneer Dryer No. 2, Maple Furnish	2DV1	Dryer No. 2, Veneer Cooling Section Outlet Vent	X		X	1	6/4/97	800-900
			X		X	2	6/4/97	938-1038
			X		X	3	6/4/97	1100-1200
	2DV3	Dryer No. 2, Green End Vent	X		X	1	6/4/97	801-901
			X		X	2	6/4/97	938-1038
			X		X	3	6/4/97	1100-1200
Hardwood Veneer Dryer No. 2, White Oak Furnish (Run 4) and Red Oak Furnish (Runs 5 and 6)	2DV1	Dryer No. 2 Veneer Cooling Section Outlet Vent	X		X	4	6/4/97	1628-1728
			X		X	5	6/4/97	1807-1907
			X		X	6	6/4/97	1938-2038
	2DV3	Dryer No. 2 Green End Vent	X		X	4	6/4/97	1628-1728
			X		X	5	6/4/97	1807-1907
			X		X	6	6/4/97	1938-2038

*NICM: NCASI Impinger/Canister Method; CO: Bacharach Combustion Analysis; M25A: Modified Method 25A (Total Hydrocarbon Analyzer)

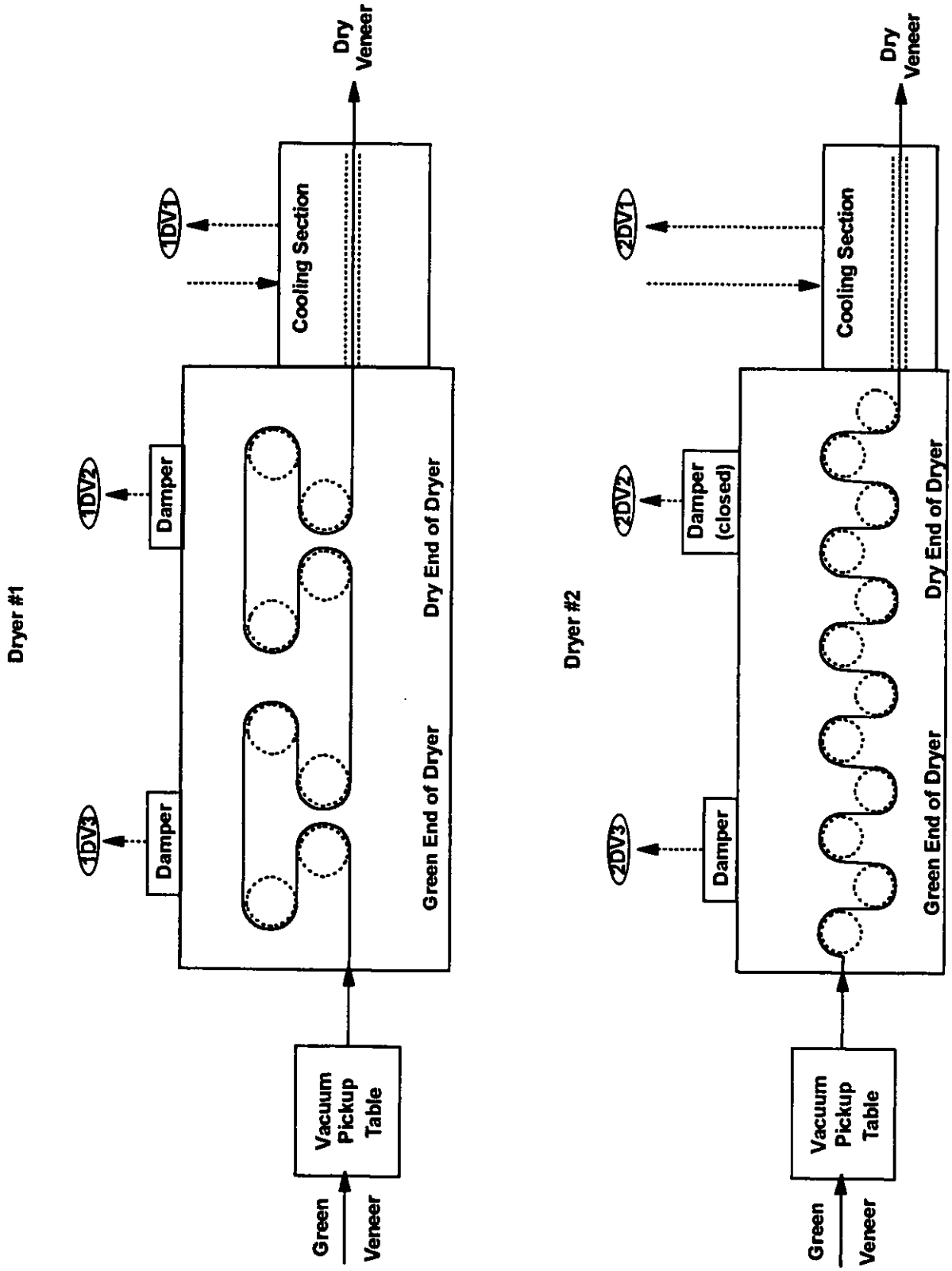

Figure 4.10.2 Hardwood Veneer Dryer, Mill 401

The sampling strategy followed during this study was to collect simultaneous vent samples from all of the vents in a single dryer while a selected species was being dried. The three species chosen were white oak, red oak and maple. Three sampling runs were conducted during drying of maple veneer, four runs during drying of white oak, and five runs during drying of red oak. Table 4.10.2 summarizes the process operating conditions recorded during testing.

Table 4.10.2. Process Operating Conditions During Testing of Hardwood Veneer Dryers, Mill 401

Source ID	Run No.	Furnish	Production Rate, MSF/hr	Veneer Thickness, inches	Target Outlet Moisture, %	Average Green End Temperature, °F	Average Dry End Temperature, °F
1DV1-1DV3	1	Red Oak	20.9	1/42	12	257	297
	2		15.7			252	293
	3		14.9			230	273
1DV1-1DV3	4	White Oak	19.4	1/36	12	235	270
	5		16.6			228	261
	6		17.3			226	261
2DV1, 2DV3	1	Maple	25.9	1/42	12	229	242
	2		22.9			238	239
	3		26.2			230	243
2DV1, 2DV3	4	White Oak	23.9	1/49	12	225	243
	5	Red Oak	18.8			248	258
	6	Red Oak	15.5			260	260

4.11 Process Description and Test Program, Mill 405

Figure 4.11.1 is a schematic representation of the process flow at Mill 405. This mill is located in the southeastern United States and produces approximately 220 million ft^2/year (3/8" basis) of hardwood plywood. This plywood is produced as 4 by 8 ft sheets and ranges in thickness from 1/2" to 1 1/8" after sanding. Yellow poplar veneer is the primary plywood core furnish at this facility and is produced onsite. A decorative sheet of veneer is used for face material. The percentage of face veneer used is 28% oak, 50% birch and 22% other. Face veneer is purchased dry.

Logs are stored in the log yard prior to debarking and soaking. After debarking, the logs are cut to length and loaded into one of six log soaking vats. While in the vats, the log blocks slowly heat to a temperature slightly above the desired peeling temperature (approximately 110°F). The preheated blocks are removed from the vats and are fed to one of two lathes. The resulting green veneer is clipped, sorted and stacked. Green clippings, along with block saw trimmings, are chipped and then sold. The green peeled veneer sheets are transported to the dryer. The dryer is a multiple deck, direct fired, longitudinal dryer.

Individual sheets are loaded into the veneer dryer and subsequently transported into the first heated zone, the "green end" of the dryer. The primary function of the first heated zone is to heat the sheets to a fixed temperature. These hot sheets then pass into the second heated zone, the "dry end" of the dryer, which functions to reduce the moisture in the veneer sheets to 8-10% (dry basis). The dried sheets are conveyed through a veneer cooling section, which functions to equilibrate the moisture and temperature in the wood. After the sheets exit the veneer cooling section, they are sorted and stacked. Sheets that require further drying are removed and returned to the green end of the dryer. For the purposes of this study, redry production is counted during its first pass through the dryer.

The dried veneer is transported to one of three spreaders, where plywood sheets are manually assembled from alternating layers of veneer and glue. Stacks of glued sheets are conveyed to one of three press lines, where a prepress compresses the stack for a sufficient time period to allow the glued veneer sheets to adhere to one another. Stacks from the prepress are then conveyed to one of three hot presses, where the sheets are individually fed into the loader. These sheets are conveyed into an open press, which closes after the loading is completed. During the press cycle, heat and pressure are applied to the sheets until the individual pieces of veneer within the sheets are permanently bonded. When a hot press opens, the hot plywood sheets are conveyed to the unloader. The stack of unloaded sheets is moved to finishing, where the sheets are individually trimmed to size, patched, sanded and packaged for transport.

Table 4.11.1 summarizes the emission test program at Mill 405, including process units tested, sources associated with each unit, sampling and analytical procedures used and the test schedule.

4.11.1 Hardwood Veneer Dryer, Mill 405

The Moore veneer dryer, which is diagrammed in Figure 4.11.2, is an eight-deck, direct fired, longitudinal dryer in which combustion air is circulated perpendicular and parallel to the direction of veneer flow. The combustion air is circulated perpendicular to veneer flow by door fans located on the top of the dryer and parallel to veneer flow by fans located at the green end of the dryer. The dryer is heated with exhaust from an Energex burner which is fueled by sanderdust. The burner has a capacity of 45 million Btu per hour. Dryer exhaust is recirculated, outside of the dryer, from the "dry end" to the "green end." Veneer is fed independently to the four lower and four upper decks. This dryer has 20 sections (each with a fan), two vents from each of the two heated zones and two exhaust vents from the veneer cooling section.

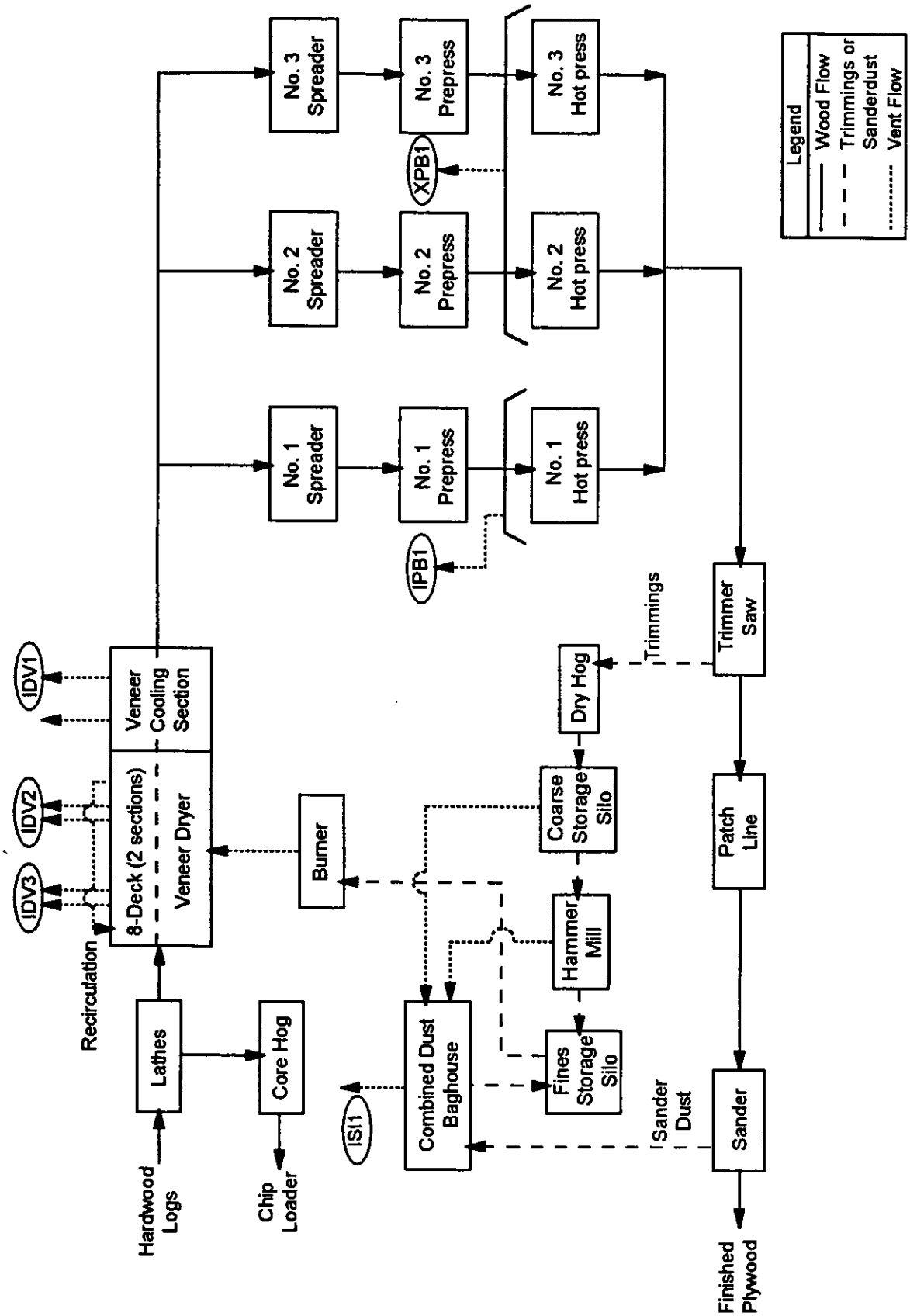

Figure 4.11.1 Overall Process Flow Diagram, Mill 405

Table 4.11.1. Emission Test Program, Mill 405

Unit	Source Code	Source Description	Emission Testing Procedure*			Test Schedule		
			NICM	CO	M25A	Run	Date	Time
Hardwood Veneer Dryer	1DV3	Vent from First Heated Zone	X	X	X	1	3/3/98	1748-1848
			X	X	X	2	3/4/98	1055-1155
			X	X	X	3	3/4/98	1640-1740
	1DV2	Vent from Second Heated Zone	X	X	X	1	3/3/98	1748-1848
			X	X	X	2	3/4/98	1055-1155
			X	X	X	3	3/4/98	1640-1740
	1DV1	Cooling Section Vent	X		X	1	3/3/98	1748-1848
			X		X	2	3/4/98	1055-1155
			X		X	3	3/4/98	1640-1740
Hardwood Plywood Hot Board Press	1PB1	No. 1 Press Vent	X		X	1	3/5/98	1052-1152
			X		X	2	3/5/98	1239-1339
			X		X	3	3/5/98	1430-1530
	XPB1	Nos. 2 and 3 Press Vents	X		X	1	3/5/98	1055-1155
			X		X	2	3/5/98	1256-1356
			X		X	3	3/5/98	1450-1553
Combined Dust Baghouse	1S11	Vent	X		X	1	3/5/98	1030-1130
			X		X	2	3/5/98	1202-1302
			X		X	3	3/5/98	1342-1442

*NICM: NCASI Impinger/Canister Method; CO: Bacharach Combustion Analysis; M25A: Modified Method 25A (Total Hydrocarbon Analyzer)

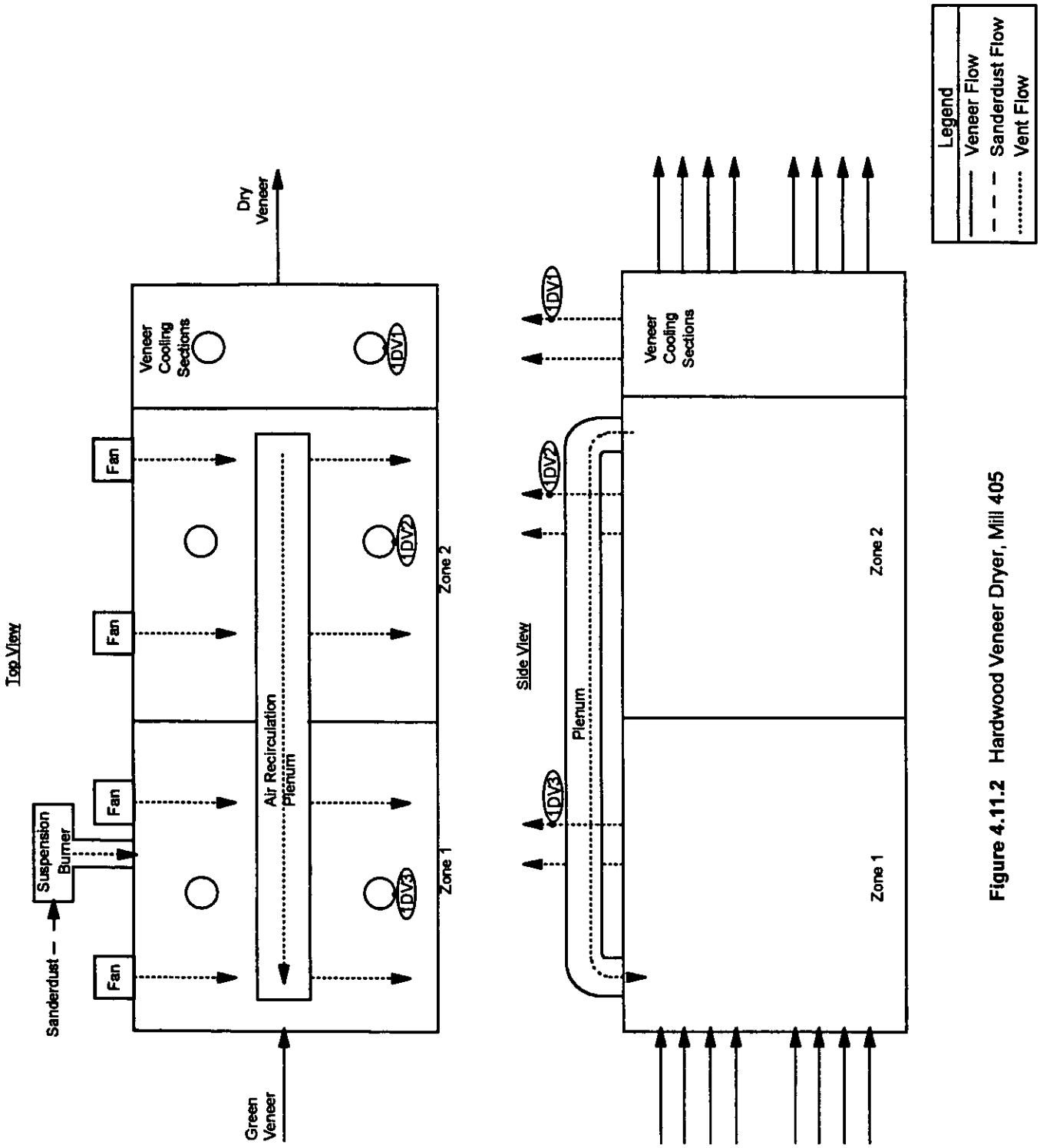

Figure 4.11.2 Hardwood Veneer Dryer, Mill 405

Three sampling points were selected to characterize emissions from the veneer drying process. Exhaust gases were collected from one of two vents from the first heated zone (1DV3), one of two vents from the second heated zone (1DV2) and one of two vents from the cooling zone (1DV1), simultaneously. During testing, one of the two vents on the second heated zone was closed. Stack velocities were recorded for both vents from the first heated zone and the cooling section. The flow rates were totaled and the totals were used to calculate emission rates for the first heated zone and cooling section. Each test consisted of three 1-hour runs. The veneer dryer operating conditions recorded during testing are listed in Table 4.11.2.

4.11.2 Hardwood Plywood Hot press, Mill 405

Three William White hot presses are used to transform the prepressed veneer into plywood sheets. These presses are diagrammed in Figure 4.11.3. Press temperatures, pressures and cycle times vary with type of plywood being produced. Average temperatures and pressures are 260°F and 160 psi, respectively. Press cycle times are five to seven minutes. The platens used to heat the plywood in the press are indirect steam heated. All three presses combined have a production capacity of 36 MSF (3/8" basis) per hour. The average percent moisture and board density of the pressed plywood are 5% (dry basis) and 28 lb/ft^3, respectively.

All three presses are partially enclosed. The no. 1 press is individually enclosed and vented to a single press vent (1PB1). The no. 2 and no. 3 presses share the same enclosure and are vented to a single vent (XPB1). Both press vents were tested and each test consisted of three 1-hour runs. Table 4.11.3 lists the process operating conditions recorded during testing.

4.11.3 Combined Dust Baghouse Source, Mill 405

Three storage silo cyclones receive exhaust gases from all wood residue handling processes at this mill. These three cyclones all vent to a single combined dust baghouse, which was sampled. Process units vented through the three cyclones to the baghouse are: trim saw, composer, core saw, dry hog, hammermill, and sander. Figure 4.11.4 shows the configuration of the system. Table 4.11.4 provides the production rates for the sander and trim saw during testing.

The production rate for the baghouse would best be represented by the amount of wood residue, by weight, sent to the cyclones. Unfortunately, this information is not available. The production rate for the baghouse is provided as an average of the plywood production of the sander and trim saw, normalized to a MSF 3/8"/hour basis. Due to the small amount of material sanded from the board at this mill (generally on 5/1000 of an inch removed from each veneer face) and lack of information on the total amount of wood material processed, the production based emission rates provided in Table 5.11.3 should be used with caution by other hardwood plywood mills.

The combined dust baghouse contains 4,000 ft^2 of filter area. The baghouse is equipped with reverse air cleaning to remove particles from the sanderdust air stream. These particles accumulate on fabric filters inside the baghouse. The cylindrical bags are cleaned by isolating dirty bags from the source air stream and blowing clean air through the isolated bags in the direction opposite of normal flow. The sampling point was located approximately 200 feet downstream of the sander dust baghouse (1SI1). Three 1-hour tests were completed for this source.

Table 4.11.2. Process Operating Conditions During Testing of Hardwood Veneer Dryers, Mill 405

Source ID	Run No.	Production Rate, MSF 3/8"/hr	Veneer Thickness, inches	Veneer Type	Average "Green End" Dryer Temp., °F,	Average "Dry End" Dryer Temp., °F	Average Redry Per Hour, %*	Average Combustion Air Temp., °F
Veneer Dryer	1	18.5	1/7	sheets, strips	470	347	12.4	1063
(1DV1, 1DV2,	2	18.5	1/7, 1/10	4x4, 4x8, sheets	439	329	20.1	1005
1DV3)	3	24.9	1/7	sheets, strips	466	375	5.4	1085

*Percentage of veneer exiting the dryer that required redrying

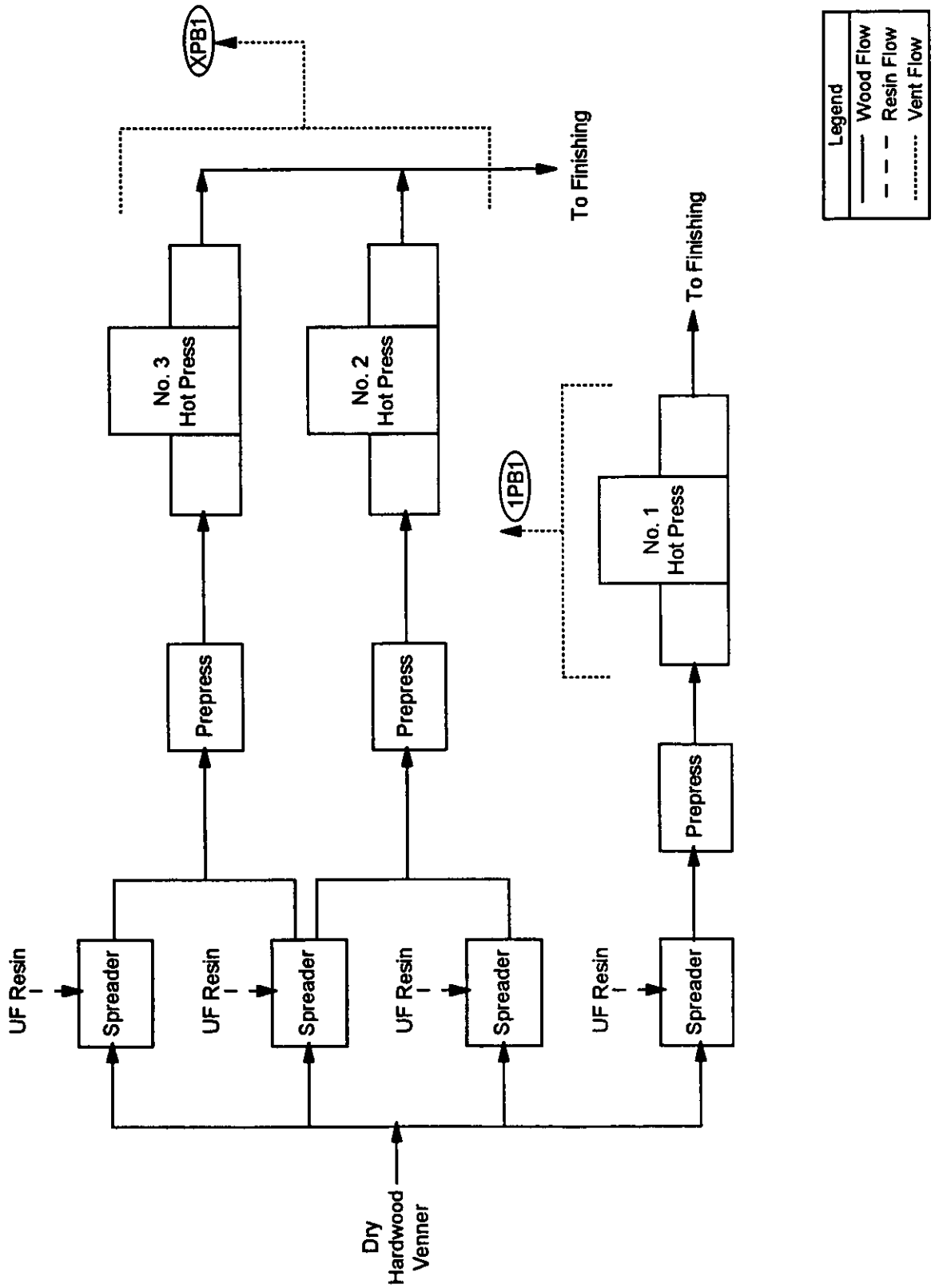

Figure 4.11.3 Hardwood Plywood Hot Presses, Mill 405

Table 4.11.3. Process Operating Conditions During Testing of the Hardwood Hot Presses, Mill 405

Source ID	Run No.	Production Rate, MSF 3/8"/hr	No. of Plies	Board Thickness, inches	Resin Type*	Average Press Temp., °F	Press Time, min	Press Pressure, psi
1PB1	1	6.14	7	3/4	UF	263	5-7	160
Press	2	7.68	7	3/4	UF	262	5-7	160
No. 1	3	9.22	7	3/4	UF	263	5-7	160
XPB1	1	13.1	7	3/4, 5/8	UF	262	5-7	160
Press	2	13.8	7, 9	3/4	UF	263	5-7	160
Nos. 2, 3			(48***)				5-7	
	3	21.5	7	3/4	UF	268	5-7	160

*UF - Urea-Formaldehyde
**No catalysts, waxes or scavengers used
***48 sheets of 9-ply pressed during run

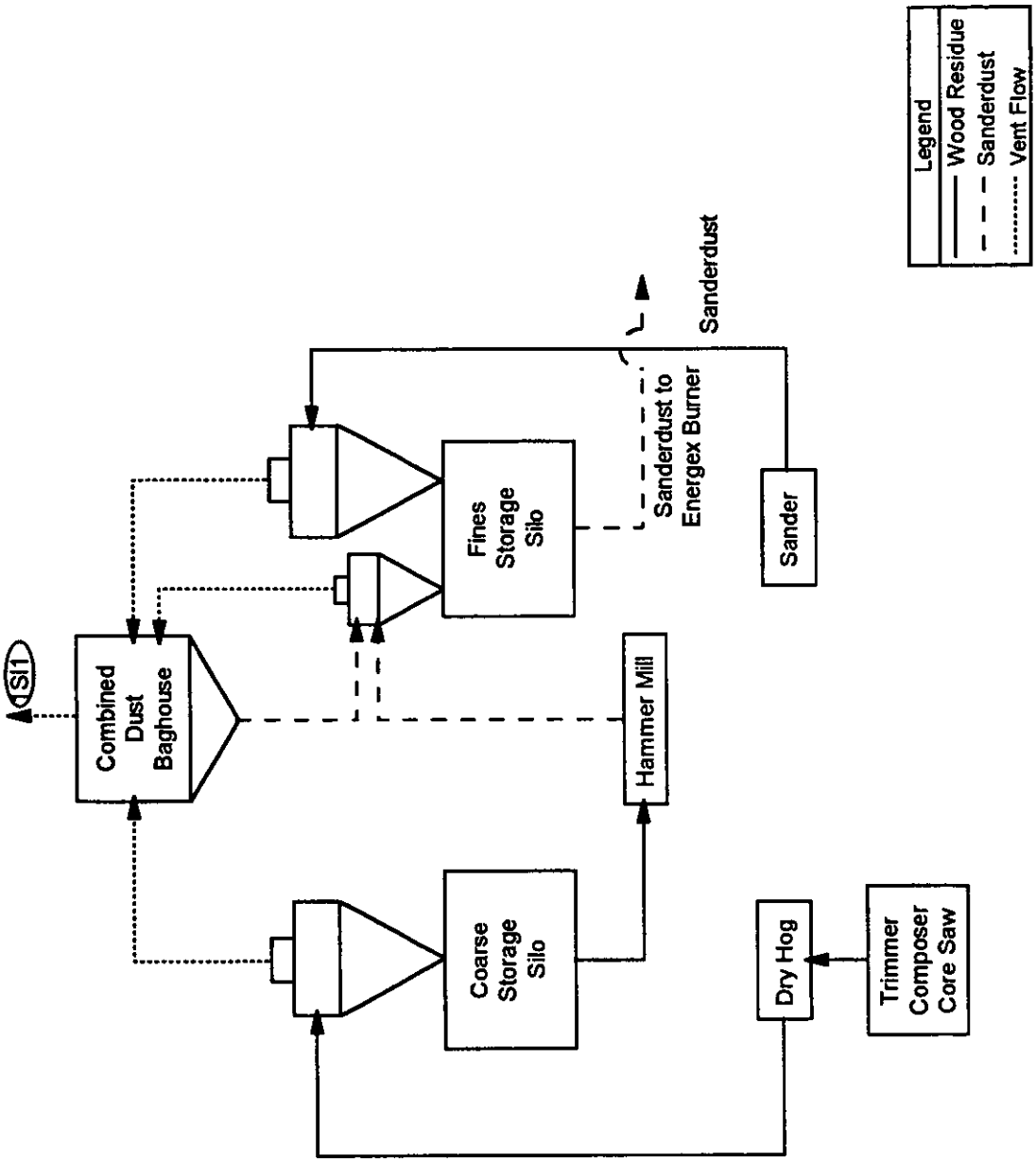

Figure 4.11.4 Wood Residue Collection System, Mill 405

Table 4.11.4. Process Operating Conditions During Testing of the Combined Dust Baghouse (1SI1), Mill 405

Source	Run No.	Date	Time	Production Rate,*	Plywood Type and Face Veneer
Sander	1	3/5/98	1030-1130	36	3/4" Select White Maple
	2	3/5/98	1202-1302	39.2	3/4" Southern Birch
	3	3/5/98	1342-1442	36.3	3/4" Southern Birch
Trim Saw	1	3/5/98	1030-1130	46.8	3/4" Southern Birch
	2	3/5/98	1202-1302	41.6	3/4" Southern Birch
	3	3/5/98	1342-1442	18.2	3/4" Southern Birch
Average				41.4	
				40.3	
				27.4	

*The production rate for the sander is provided as thousand square feet (MSF) of surface sanded (both sides of panel). The production rate for the trim saw, which was cutting 3/4 inch panels, has been normalized to a 3/8 inch basis (MSF 3/8/hour). The average production rate for the system has also been normalized to a MSF 3/8/hour basis. See discussion in Section 4.11.3.

5.0 TEST RESULTS

The test results for the 11 plywood and hardwood veneer mills tested in this study (Mills 065, 112, 115, 155, 165, 170, 188, 194, 400, 401, and 405) are presented in this section.

5.1 Results of Tests at Mill 065

Tests to measure the volatile organic HAP and VOC emissions from a hardwood plywood press were conducted at Mill 065. Selected non-HAPs (including terpenes) were also measured. This section summarizes the test results. Detailed information on process operating conditions during the tests is included in Section 4.1. Table 5.1.1 contains the emission test results for the speciated compounds measured, the total HAPs, the total terpenes and the total VOCs. Source physical parameters (volumetric flow rate, moisture content and dry bulb temperature) and unit production rates are also given for this source.

Table 5.1.1. Press Emissions, Mill 065			
Analyte		Press Vent (065-1PB1) lb/MSF 3/8"	
acetaldehyde	(H)	ND	3.1E-3
acetone	(N)		4.2E-3
acrolein	(H)	ND	2.8E-3
benzene	(H)	ND	1.1E-3
bromomethane	(H)	ND	1.3E-3
camphene		ND	3.8E-2
3-carene		ND	3.8E-2
chloroethane	(H)	ND	9.0E-4
chloroethene	(H)	ND	8.7E-4
cumene	(H)	ND	3.4E-2
p-cymene		ND	3.7E-2
1,2-dichloroethane	(H)	ND	1.4E-3
cis-1,2-dichloroethylene		ND	1.4E-3
formaldehyde	(H)		8.8E-3
limonene		ND	3.8E-2
p-mentha-1,5-diene		ND	3.8E-2
methanol	(H)		6.7E-2
methyl ethyl ketone (MEK)	(H)	ND	3.5E-3
methyl isobutyl ketone	(H)	ND	3.4E-3
methylene chloride	(H)	ND	1.2E-3
phenol	(H)		8.3E-3
alpha-pinene		ND	3.8E-2
beta-pinene		ND	3.8E-2
propionaldehyde	(H)	ND	3.1E-3
styrene	(H)	ND	1.5E-3
toluene	(H)	ND	1.3E-3
1,2,4-trichlorobenzene	(H)	ND	2.5E-3
m,p-xylene	(H)	ND	1.5E-3
o-xylene	(H)	ND	1.5E-3
THC as Carbon			7.1E-2
Total HAPs			8.5E-2
Total Terpenes			0.0E+0
Production Rate (MSF 3/8 /hr)			21.0
Vol. Flow Rate (DSCFM)			22017
Source Moisture (%)			2.1
Source Temp (°C)			40.2

ND x.xEx = Below Detection Limit of x.xEx; H = CAA HAP; AI = Analytical Interference; ODTH = Oven Dried Tons per Hour; N = Not a HAP or VOC as defined by US EPA; MSF = 1000 square feet

5.2 Results of Tests at Mill 112

At Mill 112, tests to measure volatile organic HAP and VOC emissions were conducted on the no. 2 dryer while drying Douglas-fir veneer and then while drying a mixture of fir and pine veneer. The WESP associated with two dryers, the radio frequency dryer, the hot press, and a log steaming vat were also tested. The results of these tests are contained in Tables 5.2.1 through 5.2.6, respectively. In Table 5.2.1, a total uncontrolled emission rate for veneer dryer no. 2 was calculated by summing the emissions measured from the two dryer heated zones, the two veneer cooling section vents, and a closely associated roof vent. These tests were conducted while the dryer was processing Douglas-fir. This table also subtotals the uncontrolled emissions for the dryer heated zones and those from the veneer cooling section. Table 5.2.2 summarizes the uncontrolled emissions from the two dryer heated zones while a mix of Douglas-fir and ponderosa pine was being tested. In addition to the individual compound results, total HAP and total VOC values are presented in Tables 5.2.1 through 5.2.6. Source physical parameters (volumetric flow rate, moisture content and dry bulb temperature) and unit production rates are also given for each source. Detailed information on process operating conditions during the tests is included in Section 4.2. The direct injection GC/FID analysis results for the process liquid samples collected at Mill 112 are summarized in Table 5.2.7. The detailed process liquid samples analysis results are contained in Appendix C.

Table 5.2.1. No. 2 Dryer Emissions, Douglas Fir Furnish, Mill 112

Analyte		Dry End Exhaust (112-2DV5) lb/MSF 3/8"	Green End Exhaust (112-2DV6) lb/MSF 3/8"	Total Heated Zone Emissions lb/MSF 3/8"	Cooling Section Exhaust No. 2 (112-2DV3) lb/MSF 3/8"	Cooling Section Exhaust No. 1 (112-2DV4) lb/MSF 3/8"	Total Veneer Cooling Section Emissions lb/MSF 3/8"	Building Exhaust (112-1MF1) lb/MSF 3/8"	Dryer Total Emissions lb/MSF 3/8"
acetaldehyde	(H)	1.7E-2	4.8E-3	2.2E-2	9.0E-3	ND 2.4E-3	9.0E-3	ND 1.2E-2	3.1E-2
acetone	(N)	5.3E-3	2.5E-3	7.8E-3	1.6E-2	3.1E-3	1.9E-2	1.4E-2	4.1E-2
acrolein	(H)	ND 2.7E-3	ND 9.6E-4	ND 3.6E-3	ND 1.0E-2	ND 2.2E-3	ND 1.2E-2	ND 1.0E-2	ND 2.6E-2
benzene	(H)	ND 1.2E-3	ND 3.5E-4	ND 1.6E-3	ND 4.5E-3	ND 1.0E-3	ND 5.5E-3	ND 4.1E-3	ND 1.1E-2
bromomethane	(H)	ND 1.5E-3	ND 4.3E-4	ND 1.9E-3	ND 5.5E-3	ND 1.2E-3	ND 6.7E-3	ND 5.0E-3	ND 1.4E-2
camphene		ND 4.2E-2	ND 1.2E-2	ND 5.4E-2	ND 1.6E-1	ND 3.5E-2	ND 1.9E-1	ND 1.4E-1	ND 3.9E-1
3-carene		ND 4.2E-2	ND 1.2E-2	ND 5.4E-2	ND 1.6E-1	ND 3.5E-2	ND 1.9E-1	ND 1.4E-1	ND 3.9E-1
chloroethane	(H)	ND 9.9E-4	ND 2.9E-4	ND 1.3E-3	ND 3.7E-3	ND 8.2E-4	ND 4.5E-3	ND 3.4E-3	ND 9.2E-3
chloroethene	(H)	ND 9.6E-4	ND 2.8E-4	ND 1.2E-3	ND 3.6E-3	ND 8.0E-4	ND 4.4E-3	ND 3.3E-3	ND 8.9E-3
cumene	(H)	ND 3.7E-2	ND 1.1E-2	ND 4.8E-2	ND 1.4E-1	ND 3.1E-2	ND 1.7E-1	ND 1.3E-1	ND 3.4E-1
p-cymene		ND 4.1E-2	ND 1.2E-2	ND 5.3E-2	ND 1.5E-1	ND 3.4E-2	ND 1.9E-1	ND 1.4E-1	ND 3.8E-1
1,2-dichloroethane	(H)	ND 1.5E-3	ND 4.5E-4	ND 2.0E-3	ND 5.7E-3	ND 1.3E-3	ND 7.0E-3	ND 5.2E-3	ND 1.4E-2
cis-1,2-dichloroethylene		ND 1.5E-3	ND 4.4E-4	ND 1.9E-3	ND 5.6E-3	ND 1.2E-3	ND 6.8E-3	ND 5.1E-3	ND 1.4E-2
formaldehyde	(H)	5.4E-3	1.1E-3	6.5E-3	ND 2.9E-3	ND 6.0E-4	ND 3.5E-3	ND 3.1E-3	6.5E-3
limonene		ND 4.2E-2	ND 1.2E-2	ND 5.4E-2	ND 1.6E-1	ND 3.5E-2	ND 1.9E-1	ND 1.4E-1	ND 3.9E-1
p-mentha-1,5-diene		ND 4.2E-2	ND 1.2E-2	ND 5.4E-2	ND 1.6E-1	ND 3.5E-2	ND 1.9E-1	ND 1.4E-1	ND 3.9E-1
methanol	(H)	1.7E-2	9.6E-3	2.6E-2	1.1E-2	2.5E-3	1.4E-2	2.4E-2	6.4E-2
methyl ethyl ketone (MEK)	(H)	ND 3.4E-3	ND 1.2E-3	ND 4.6E-3	ND 1.3E-2	ND 2.7E-3	ND 1.6E-2	ND 1.3E-2	ND 3.3E-2
methyl isobutyl ketone	(H)	ND 3.3E-3	ND 1.2E-3	ND 4.5E-3	1.2E-2	3.2E-3	1.6E-2	ND 1.3E-2	1.6E-2
methylene chloride	(H)	ND 1.3E-3	ND 3.8E-4	ND 1.7E-3	ND 4.9E-3	ND 1.1E-3	ND 6.0E-3	ND 4.4E-3	ND 1.2E-2
phenol	(H)	ND 5.3E-3	ND 2.0E-3	ND 7.3E-3	ND 2.0E-2	ND 4.3E-3	ND 2.5E-2	ND 2.1E-2	ND 5.3E-2
alpha-pinene		1.7E-1	1.3E-1	3.0E-1	ND 1.6E-1	ND 3.5E-2	ND 1.9E-1	ND 1.4E-1	3.0E-1
beta-pinene		ND 4.2E-2	1.1E-2	1.1E-2	ND 1.6E-1	ND 3.5E-2	ND 1.9E-1	ND 1.4E-1	1.1E-2
propionaldehyde	(H)	ND 3.0E-3	ND 1.1E-3	ND 4.1E-3	ND 1.1E-2	ND 2.4E-3	ND 1.4E-2	ND 1.2E-2	ND 3.0E-2
styrene	(H)	ND 1.6E-3	ND 4.7E-4	ND 2.1E-3	ND 6.0E-3	ND 1.3E-3	ND 7.3E-3	ND 5.4E-3	ND 1.5E-2
toluene	(H)	ND 1.4E-3	ND 4.2E-4	ND 1.8E-3	ND 5.3E-3	ND 1.2E-3	ND 6.5E-3	ND 4.8E-3	ND 1.3E-2
1,2,4-trichlorobenzene	(H)	ND 2.8E-3	ND 8.2E-4	ND 3.6E-3	ND 1.0E-2	ND 2.3E-3	ND 1.3E-2	ND 9.5E-3	ND 2.6E-2
m,p-xylene	(H)	ND 1.6E-3	ND 4.8E-4	ND 2.1E-3	ND 6.1E-3	ND 1.4E-3	ND 7.5E-3	ND 5.5E-3	ND 1.5E-2
o-xylene	(H)	ND 1.6E-3	ND 4.8E-4	ND 2.1E-3	ND 6.1E-3	ND 1.4E-3	ND 7.5E-3	ND 5.5E-3	ND 1.5E-2
THC as Carbon		5.2E-1	1.9E-1	7.1E-1	1.2E-1	2.7E-3	1.2E-1		8.3E-1
Total HAPs		3.9E-2	1.5E-2	5.4E-2	3.3E-2	5.7E-3	3.8E-2	2.4E-2	1.2E-1
Total Terpenes		1.7E-1	1.4E-1	3.1E-1	0.0E+0	0.0E+0	0.0E+0	0.0E+0	3.1E-1
Production Rate (MSF 3/8 /hr)		8.9	8.9		6.1	6.1		6.1	
Vol. Flow Rate (DSCFM)		10112	2919		12781	2797		11120	
Source Moisture (%)		10.9	19.7		1.5	1.3		2.2	
Source Temp (°C)		142.1	127.1		40.4	50.2		43.4	

ND x.xEx = Below Detection Limit of x.xEx; H = CAA HAP; AI = Analytical Interference; ODTH = Oven Dried Tons per Hour; N = Not a HAP or VOC as defined by US EPA; MSF = 1000 square feet

Table 5.2.2. No. 2 Dryer Emissions, Ponderosa Pine Furnish, Mill 112							
Analyte		Dry End Exhaust (112-2DV5) lb/MSF 3/8"		Green End Exhaust (112-2DV6) lb/MSF 3/8"		Dryer Total Heated Zone Emissions lb/MSF 3/8"	
acetaldehyde	(H)		8.5E-3		1.5E-3		1.0E-2
acetone	(N)		8.9E-3		5.3E-3		1.4E-2
acrolein	(H)	ND	3.5E-3	ND	1.9E-3	ND	5.3E-3
benzene	(H)	ND	1.6E-3	ND	7.2E-4	ND	2.3E-3
bromomethane	(H)	ND	1.9E-3	ND	8.7E-4	ND	2.8E-3
camphene		ND	5.5E-2	ND	2.5E-2	ND	8.0E-2
3-carene			1.9E-1		2.2E-1		4.1E-1
chloroethane	(H)	ND	1.3E-3	ND	5.9E-4	ND	1.9E-3
chloroethene	(H)	ND	1.3E-3	ND	5.7E-4	ND	1.8E-3
cumene	(H)	ND	4.9E-2	ND	2.2E-2	ND	7.1E-2
p-cymene		ND	5.4E-2	ND	2.5E-2	ND	7.9E-2
1,2-dichloroethane	(H)	ND	2.0E-3	ND	9.1E-4	ND	2.9E-3
cis-1,2-dichloroethylene		ND	2.0E-3	ND	8.9E-4	ND	2.9E-3
formaldehyde	(H)		4.8E-3		1.3E-3		6.2E-3
limonene		ND	5.5E-2		1.9E-2		1.9E-2
p-mentha-1,5-diene		ND	5.5E-2	ND	2.5E-2	ND	8.0E-2
methanol	(H)		1.6E-2		2.4E-2		3.9E-2
methyl ethyl ketone (MEK)	(H)	ND	4.4E-3	ND	2.3E-3	ND	6.7E-3
methyl isobutyl ketone	(H)	ND	4.4E-3	ND	2.3E-3	ND	6.6E-3
methylene chloride	(H)	ND	1.7E-3	ND	7.8E-4	ND	2.5E-3
phenol	(H)	ND	6.9E-3	ND	3.8E-3	ND	1.1E-2
alpha-pinene		ND	5.5E-2		3.9E-2		3.9E-2
beta-pinene			1.6E-2		5.5E-2		7.1E-2
propionaldehyde	(H)		4.1E-3	ND	2.1E-3		4.1E-3
styrene	(H)	ND	2.1E-3	ND	9.6E-4	ND	3.1E-3
toluene	(H)	ND	1.9E-3	ND	8.5E-4	ND	2.7E-3
1,2,4-trichlorobenzene	(H)	ND	3.7E-3	ND	1.7E-3	ND	5.3E-3
m,p-xylene	(H)	ND	2.1E-3	ND	9.8E-4	ND	3.1E-3
o-xylene	(H)	ND	2.1E-3	ND	9.8E-4	ND	3.1E-3
THC as Carbon			6.5E-1		7.8E-1		1.4E+0
Total HAPs			3.3E-2		2.7E-2		6.0E-2
Total Terpenes			2.1E-1		3.3E-1		5.4E-1
Production Rate (MSF 3/8 /hr)			8.1		8.1		
Vol. Flow Rate (DSCFM)			10213		4569		
Source Moisture (%)			10.0		21.8		
Source Temp (°C)			138.8		133.7		

ND x.xEx = Below Detection Limit of x.xEx; H = CAA HAP; AI = Analytical Interference; ODTH = Oven Dried Tons per Hour; N = Not a HAP or VOC as defined by US EPA; MSF = 1000 square feet

Table 5.2.3. WESP Emissions, Mill 112					
		Douglas Fir Furnish		Ponderosa Pine/Fir Furnish	
Analyte		WESP Inlet (112-XDV2) lb/MSF 3/8"	WESP Outlet (112-XDV1) lb/MSF 3/8"	WESP Inlet (112-XDV2) lb/MSF 3/8"	WESP Outlet (112-XDV1) lb/MSF 3/8"
acetaldehyde	(H)	1.9E-2	8.0E-3	3.5E-2	6.5E-3
acetone	(N)	2.1E-2	5.0E-3	2.9E-2	7.3E-3
acrolein	(H)	ND 2.2E-3	ND 2.4E-3	9.9E-4	ND 3.5E-3
benzene	(H)	ND 9.2E-4	ND 9.5E-4	4.9E-3	ND 1.5E-3
bromomethane	(H)	ND 1.1E-3	ND 1.2E-3	ND 1.8E-3	ND 1.8E-3
camphene		ND 3.2E-2	ND 3.3E-2	ND 5.0E-2	ND 5.1E-2
3-carene		ND 3.2E-2	ND 3.3E-2	9.1E-2	1.4E-1
chloroethane	(H)	ND 7.6E-4	ND 7.8E-4	ND 1.2E-3	ND 1.2E-3
chloroethene	(H)	ND 7.3E-4	ND 7.6E-4	ND 1.2E-3	ND 1.2E-3
cumene	(H)	ND 2.8E-2	ND 2.9E-2	ND 4.4E-2	ND 4.5E-2
p-cymene		ND 3.1E-2	ND 3.3E-2	ND 5.0E-2	ND 5.1E-2
1,2-dichloroethane	(H)	ND 1.2E-3	ND 1.2E-3	ND 1.8E-3	ND 1.9E-3
cis-1,2-dichloroethylene		ND 1.1E-3	ND 1.2E-3	ND 1.8E-3	ND 1.8E-3
formaldehyde	(H)	1.4E-2	2.6E-3	9.9E-2	4.9E-3
limonene		ND 3.2E-2	ND 3.3E-2	ND 5.0E-2	ND 5.1E-2
p-mentha-1,5-diene		ND 3.2E-2	ND 3.3E-2	ND 5.0E-2	ND 5.1E-2
methanol	(H)	2.3E-2	1.8E-2	2.8E-2	2.9E-2
methyl ethyl ketone (MEK)	(H)	ND 2.8E-3	ND 3.1E-3	ND 4.0E-3	ND 4.4E-3
methyl isobutyl ketone	(H)	ND 2.7E-3	ND 3.0E-3	ND 4.0E-3	ND 4.3E-3
methylene chloride	(H)	ND 1.0E-3	ND 1.0E-3	ND 1.6E-3	ND 1.6E-3
phenol	(H)	ND 4.4E-3	ND 4.9E-3	ND 6.4E-3	ND 7.0E-3
alpha-pinene		1.4E-1	2.0E-1	5.2E-2	1.3E-1
beta-pinene		ND 3.2E-2	ND 3.3E-2	ND 5.0E-2	3.8E-2
propionaldehyde	(H)	9.4E-4	ND 2.7E-3	5.9E-3	ND 3.9E-3
styrene	(H)	ND 1.2E-3	ND 1.3E-3	ND 1.9E-3	ND 2.0E-3
toluene	(H)	ND 1.1E-3	ND 1.1E-3	2.0E-2	ND 1.7E-3
1,2,4-trichlorobenzene	(H)	ND 2.1E-3	ND 2.2E-3	ND 3.3E-3	ND 3.4E-3
m,p-xylene	(H)	ND 1.2E-3	ND 1.3E-3	3.8E-3	ND 2.0E-3
o-xylene	(H)	ND 1.2E-3	ND 1.3E-3	ND 2.0E-3	ND 2.0E-3
THC as Carbon		3.5E-1	4.3E-1	7.2E-1	5.3E-1
Total HAPs		5.6E-2	2.8E-2	2.0E-1	4.0E-2
Total Terpenes		1.4E-1	2.0E-1	1.4E-1	3.0E-1
Production Rate (MSF 3/8 /hr)		26.3	26.3	23.2	23.2
Vol. Flow Rate (DSCFM)		23952	23952	27049	27049
Source Moisture (%)		17.6	17.6	14.6	14.6
Source Temp (°C)		57.9	57.9	55.7	55.7

ND x.xEx = Below Detection Limit of x.xEx; H = CAA HAP; AI = Analytical Interference; ODTH = Oven Dried Tons per Hour; N = Not a HAP or VOC as defined by US EPA; MSF = 1000 square feet

Table 5.2.4. Radio Frequency Re-Dryer Emissions, Mill 112			
Analyte		RF Re-Dryer Exhaust (112-1DM1) lb/MSF 3/8"	
acetaldehyde	(H)	ND	2.7E-4
acetone	(N)		4.0E-4
acrolein	(H)	ND	2.4E-4
benzene	(H)	ND	8.6E-5
bromomethane	(H)	ND	1.0E-4
camphene		ND	3.0E-3
3-carene		ND	3.0E-3
chloroethane	(H)	ND	7.1E-5
chloroethene	(H)	ND	6.9E-5
cumene	(H)	ND	2.6E-3
p-cymene		ND	2.9E-3
1,2-dichloroethane	(H)	ND	1.1E-4
cis-1,2-dichloroethylene		ND	1.1E-4
formaldehyde	(H)	ND	7.5E-5
limonene		ND	3.0E-3
p-mentha-1,5-diene		ND	3.0E-3
methanol	(H)		5.2E-4
methyl ethyl ketone (MEK)	(H)	ND	3.0E-4
methyl isobutyl ketone	(H)	ND	2.9E-4
methylene chloride	(H)	ND	9.3E-5
phenol	(H)	ND	4.9E-4
alpha-pinene			1.1E-2
beta-pinene		ND	3.0E-3
propionaldehyde	(H)	ND	2.7E-4
styrene	(H)	ND	1.1E-4
toluene	(H)	ND	1.0E-4
1,2,4-trichlorobenzene	(H)	ND	2.0E-4
m,p-xylene	(H)	ND	1.2E-4
o-xylene	(H)	ND	1.2E-4
THC as Carbon			2.1E-2
Total HAPs			5.2E-4
Total Terpenes			1.1E-2
Production Rate (MSF 3/8 /hr)			12.6
Vol. Flow Rate (DSCFM)			990
Source Moisture (%)			2.8
Source Temp (°C)			91.6

ND x.xEx = Below Detection Limit of x.xEx; H = CAA HAP; AI = Analytical Interference; ODTH = Oven Dried Tons per Hour; N = Not a HAP or VOC as defined by US EPA; MSF = 1000 square feet

Table 5.2.5. Press Emissions, Mill 112			
Analyte		Powered Vent Above Press (112-1PB1) lb/MSF 3/8"	
acetaldehyde	(H)		7.2E-4
acetone	(N)		3.2E-3
acrolein	(H)	ND	1.6E-3
benzene	(H)	ND	7.2E-4
bromomethane	(H)	ND	8.7E-4
camphene		ND	2.5E-2
3-carene		ND	2.5E-2
chloroethane	(H)	ND	5.9E-4
chloroethene	(H)	ND	5.7E-4
cumene	(H)	ND	2.2E-2
p-cymene		ND	2.5E-2
1,2-dichloroethane	(H)	ND	9.1E-4
cis-1,2-dichloroethylene		ND	8.9E-4
formaldehyde	(H)		2.2E-3
limonene		ND	2.5E-2
p-mentha-1,5-diene		ND	2.5E-2
methanol	(H)		3.3E-2
methyl ethyl ketone (MEK)	(H)		6.6E-4
methyl isobutyl ketone	(H)	ND	2.0E-3
methylene chloride	(H)	ND	7.8E-4
phenol	(H)	ND	3.3E-3
alpha-pinene		ND	2.5E-2
beta-pinene		ND	2.5E-2
propionaldehyde	(H)	ND	1.8E-3
styrene	(H)	ND	9.5E-4
toluene	(H)	ND	8.4E-4
1,2,4-trichlorobenzene	(H)	ND	1.7E-3
m,p-xylene	(H)	ND	9.7E-4
o-xylene	(H)	ND	9.7E-4
THC as Carbon			7.9E-2
Total HAPs			3.6E-2
Total Terpenes			0.0E+0
Production Rate (MSF 3/8 /hr)			26.4
Vol. Flow Rate (DSCFM)			18800
Source Moisture (%)			2.8
Source Temp (°C)			45.2

ND x.xEx = Below Detection Limit of x.xEx; H = CAA HAP; AI = Analytical Interference; ODTH = Oven Dried Tons per Hour; N = Not a HAP or VOC as defined by US EPA; MSF = 1000 square feet

Table 5.2.6. Miscellaneous Source Emissions, Mill 112			
Analyte			Log Steaming Vat Exhaust (112-1ML1) lb/MSF 3/8"
acetaldehyde	(H)		4.7E-3
acetone	(N)		3.0E-3
acrolein	(H)	ND	7.6E-4
benzene	(H)	ND	2.8E-4
bromomethane	(H)	ND	3.4E-4
camphene		ND	9.8E-3
3-carene		ND	9.8E-3
chloroethane	(H)	ND	2.3E-4
chloroethene	(H)	ND	2.3E-4
cumene	(H)	ND	8.7E-3
p-cymene		ND	9.7E-3
1,2-dichloroethane	(H)	ND	3.6E-4
cis-1,2-dichloroethylene		ND	3.5E-4
formaldehyde	(H)	ND	2.3E-4
limonene		ND	9.8E-3
p-mentha-1,5-diene		ND	9.8E-3
methanol	(H)		7.3E-3
methyl ethyl ketone (MEK)	(H)	ND	9.6E-4
methyl isobutyl ketone	(H)	ND	9.2E-4
methylene chloride	(H)	ND	3.1E-4
phenol	(H)	ND	1.5E-3
alpha-pinene			5.6E-2
beta-pinene			3.0E-3
propionaldehyde	(H)	ND	8.6E-4
styrene	(H)	ND	3.8E-4
toluene	(H)	ND	3.3E-4
1,2,4-trichlorobenzene	(H)	ND	6.6E-4
m,p-xylene	(H)	ND	3.8E-4
o-xylene	(H)	ND	3.8E-4
THC as Carbon			
Total HAPs			1.2E-2
Total Terpenes			5.9E-2
Production Rate (MSF 3/8 /hr)			28.3
Vol. Flow Rate (DSCFM)			7116
Source Moisture (%)			12.6
Source Temp (°C)			49.9

ND x.xEx = Below Detection Limit of x.xEx; H = CAA HAP; AI = Analytical Interference; ODTH = Oven Dried Tons per Hour; N = Not a HAP or VOC as defined by US EPA; MSF = 1000 square feet

Table 5.2.7. Summary of GC/FID Process Liquid Sample Analysis Results, Mill 112

	Softwood Veneer Dryer WESP Quench Water Douglas Fir Furnish (XDV1L)	Softwood Veneer Dryer WESP Quench Water Pine/Fir Furnish (XDV1L)	WESP Stack Sump Condensate Douglas Fir Furnish (XDV2L)	WESP Stack Sump Condensate Pine/Fir Furnish Furnish (XDV2L)	Log Steam Vat (1ML1L)
Date	7/29/97	7/31/97	7/29/97	7/31/97	7/28/98
Compound, mg/L					
Acetaldehyde	4.34	5.45	0.49	0.88	1.67
Acetone	9.77	10.47	1.46	3.71	1.46
Acrolein	AI	AI	AI	AI	AI
Methanol	5.72	6.27	3.94	5.77	7.07
Methyl Ethyl Ketone	1.07	1.2	ND 0.15	ND 0.15	0.87
Methyl Isobuty Ketone	0.13	0.3	0.65	0.5	0.06
Phenol	ND 0.26	ND 0.26	ND 0.26	ND 0.26	ND 0.26
Propionaldehyde	ND 0.14	ND 0.14	ND 0.14	ND 0.14	ND 0.14

ND = below detection limit of x.xx
AI = Analytical Interference

5.3 Results of Tests at Mill 115

At Mill 115, tests to measure volatile organic HAP and VOC emissions were conducted on the combined dryer heated zone exhausts, the veneer dryer WESP, one of two hot presses and veneer dryer cooling section vents. The results of these tests are contained in Tables 5.3.1 through 5.3.3, respectively. In Table 5.3.1, the emissions from the three veneer cooling section exhausts have been averaged and then added to the combined dryer heated zone exhaust to yield a total combined dryer emission rate. In addition to the individual compound results, total HAP and total VOC values are presented in Tables 5.3.1 through 5.3.3. Source physical parameters (volumetric flow rate, moisture content and dry bulb temperature) and unit production rates are also given for each source. Detailed information on process operating conditions during the tests is included in Section 4.3. The direct injection GC/FID analysis results for the softwood veneer dryer WESP quench water (XDV1L) are presented in Table 5.3.4.

Table 5.3.1. Combined Dryer Emissions, Mill 115

Analyte		Combined Dryer Heated Zone Exhausts (115-XDV2) lb/MSF 3/8"	Dryer No. 1 Veneer Cooling Section: Exhaust No. 2 (115-1DV4) lb/MSF 3/8"	Dryer No. 1 Veneer Cooling Section: Exhaust No. 1 (115-1DV3) lb/MSF 3/8"	Dryer No. 2 Veneer Cooling Section: Exhaust No. 2 (115-2DV4) lb/MSF 3/8"	Dryer No. 2 Veneer Cooling Section: Exhaust No. 1 (115-2DV3) lb/MSF 3/8"	Dryer No. 3 Veneer Cooling Section: Exhaust No. 2 (115-3DV4) lb/MSF 3/8"	Dryer No. 3 Veneer Cooling Section: Exhaust No. 1 (115-3DV3) lb/MSF 3/8"	Veneer Cooling Section Average lb/MSF 3/8"	* Total Dryer Emissions lb/MSF 3/8"
acetaldehyde	(H)	3.5E-2	1.5E-3	ND 4.3E-3	ND 4.9E-3	ND 5.2E-3	ND 1.3E-3	ND 2.1E-3	4.8E-4	3.6E-2
acetone	(N)	3.2E-2	5.2E-3	5.8E-3	6.8E-3	8.0E-3	1.7E-3	3.9E-3	1.0E-2	4.2E-2
acrolein	(H)	ND 4.6E-3	ND 3.5E-3	ND 3.9E-3	ND 4.4E-3	ND 4.6E-3	ND 1.1E-3	ND 1.9E-3	ND 6.5E-3	ND 1.1E-2
benzene	(H)	ND 1.5E-3	ND 1.6E-3	ND 1.8E-3	ND 1.7E-3	ND 1.8E-3	ND 4.2E-4	ND 7.2E-4	ND 2.6E-3	ND 4.2E-3
bromomethane	(H)	ND 1.8E-3	ND 1.9E-3	ND 2.2E-3	ND 2.1E-3	ND 2.1E-3	ND 5.1E-4	ND 8.7E-4	ND 3.2E-3	ND 5.0E-3
camphene		ND 5.3E-2	ND 5.4E-2	ND 6.3E-2	ND 5.9E-2	ND 6.1E-2	ND 1.5E-2	ND 2.5E-2	ND 9.2E-2	ND 1.4E-1
3-carene		ND 5.3E-2	ND 5.4E-2	ND 6.3E-2	ND 5.9E-2	ND 6.1E-2	ND 1.5E-2	ND 2.5E-2	ND 9.2E-2	ND 1.4E-1
chloroethane	(H)	ND 1.2E-3	ND 1.3E-3	ND 1.5E-3	ND 1.4E-3	ND 1.5E-3	ND 3.5E-4	ND 5.9E-4	ND 2.2E-3	ND 3.4E-3
chloroethene	(H)	ND 1.2E-3	ND 1.2E-3	ND 1.4E-3	ND 1.4E-3	ND 1.4E-3	ND 3.3E-4	ND 5.7E-4	ND 2.1E-3	ND 3.3E-3
cumene	(H)	ND 4.6E-2	ND 4.8E-2	ND 5.5E-2	ND 5.2E-2	ND 5.4E-2	ND 1.3E-2	ND 2.2E-2	ND 8.1E-2	ND 1.3E-1
p-cymene		ND 5.2E-2	ND 5.3E-2	ND 6.2E-2	ND 5.8E-2	ND 6.0E-2	ND 1.4E-2	ND 2.5E-2	ND 9.1E-2	ND 1.4E-1
1,2-dichloroethane	(H)	ND 1.9E-3	ND 2.0E-3	ND 2.3E-3	ND 2.1E-3	ND 2.2E-3	ND 5.3E-4	ND 9.1E-4	ND 3.4E-3	ND 5.3E-3
cis-1,2-dichloroethylene		ND 1.9E-3	ND 1.9E-3	ND 2.2E-3	ND 2.1E-3	ND 2.2E-3	ND 5.2E-4	ND 8.9E-4	ND 3.3E-3	ND 5.2E-3
formaldehyde	(H)	4.0E-2	ND 9.7E-4	ND 1.1E-3	ND 1.3E-3	ND 1.4E-3	ND 3.5E-4	ND 5.8E-4	ND 1.9E-3	4.0E-2
limonene		ND 5.3E-2	ND 5.4E-2	ND 6.3E-2	ND 5.9E-2	ND 6.1E-2	ND 1.5E-2	ND 2.5E-2	ND 9.2E-2	ND 1.4E-1
p-mentha-1,5-diene		ND 5.3E-2	ND 5.4E-2	ND 6.3E-2	ND 5.9E-2	ND 6.1E-2	ND 1.5E-2	ND 2.5E-2	ND 9.2E-2	ND 1.4E-1
methanol	(H)	6.6E-2	2.7E-3	ND 4.0E-3	ND 4.6E-3	ND 5.0E-3	8.2E-4	6.5E-4	1.4E-3	6.8E-2
methyl ethyl ketone (MEK)	(H)	ND 5.8E-3	ND 4.4E-3	ND 5.0E-3	ND 5.5E-3	ND 5.9E-3	ND 1.4E-3	ND 1.9E-3	ND 8.0E-3	ND 1.4E-2
methyl isobutyl ketone	(H)	ND 5.4E-3	ND 4.3E-3	ND 4.9E-3	ND 5.3E-3	ND 5.6E-3	ND 1.4E-3	ND 2.3E-3	ND 8.0E-3	ND 1.3E-2
methylene chloride	(H)	ND 1.6E-3	ND 1.7E-3	ND 2.0E-3	ND 1.8E-3	ND 1.9E-3	ND 4.5E-4	ND 7.8E-4	ND 2.9E-3	ND 4.5E-3
phenol	(H)	4.9E-3	ND 6.9E-3	ND 7.9E-3	3.1E-3	ND 9.5E-3	ND 2.3E-3	ND 3.9E-3	1.0E-3	5.9E-3
alpha-pinene		ND 5.3E-2	ND 5.4E-2	ND 6.3E-2	ND 5.9E-2	ND 6.1E-2	ND 1.5E-2	ND 2.5E-2	ND 9.2E-2	ND 1.4E-1
beta-pinene		ND 5.3E-2	ND 5.4E-2	ND 6.3E-2	ND 5.9E-2	ND 6.1E-2	ND 1.5E-2	ND 2.5E-2	ND 9.2E-2	ND 1.4E-1
propionaldehyde	(H)	1.7E-2	ND 3.9E-3	ND 4.4E-3	ND 4.9E-3	ND 5.3E-3	ND 1.3E-3	ND 2.1E-3	ND 7.3E-3	1.7E-2
styrene	(H)	ND 2.0E-3	ND 2.1E-3	ND 2.4E-3	ND 2.3E-3	ND 2.3E-3	ND 5.6E-4	ND 9.6E-4	ND 3.5E-3	ND 5.5E-3
toluene	(H)	ND 1.8E-3	ND 1.8E-3	ND 2.1E-3	ND 2.0E-3	ND 2.1E-3	ND 4.9E-4	ND 8.5E-4	ND 3.1E-3	ND 4.9E-3
1,2,4-trichlorobenzene	(H)	ND 3.5E-3	ND 3.6E-3	ND 4.2E-3	ND 3.9E-3	ND 4.1E-3	ND 9.7E-4	ND 1.7E-3	ND 6.1E-3	ND 9.6E-3
m,p-xylene	(H)	ND 2.0E-3	ND 2.1E-3	ND 2.4E-3	ND 2.3E-3	ND 2.4E-3	ND 5.7E-4	ND 9.7E-4	ND 3.6E-3	ND 5.6E-3
o-xylene	(H)	ND 2.0E-3	ND 2.1E-3	ND 2.4E-3	ND 2.3E-3	ND 2.4E-3	ND 5.7E-4	ND 9.7E-4	ND 3.6E-3	ND 5.6E-3
THC as Carbon		1.7E-1	8.4E-3			1.0E-2			1.9E-2	1.9E-1
Total HAPs		1.6E-1	4.1E-3	0.0E+0	3.1E-3	0.0E+0	8.2E-4	6.5E-4	2.9E-3	1.7E-1
Total Terpenes		0.0E+0	0.0E+0	0.0E+0	0.0E+0	0.0E+0	0.0E+0	0.0E+0	0.0E+0	0.0E+0
Production Rate (MSF 3/8 /hr)		18.0	7.3	7.5	7.3	7.5	3.7	3.7		
Vol. Flow Rate (DSCFM)		25505	10669	12089	11043	11844	1412	2399		
Source Moisture (%)		27.8	1.5	1.4	1.3	1.7	1.2	1.6		
Source Temp (°C)		67.6	44.0	34.1	44.1	34.6	41.4	40.7		

ND x.xEx = Below Detection Limit of x.xEx; H = CAA HAP; AI = Analytical Interference; ODTH = Oven Dried Tons per Hour; N = Not a HAP or VOC as defined by US EPA; MSF = 1000 square feet; * = Average Cooling Section emissions added to Combined Dryer Heated Zone Exhausts

Table 5.3.2. WESP Emissions, Mill 115			
Analyte		WESP Inlet (115-XDV2) lb/MSF 3/8"	WESP Outlet (115-XDV1) lb/MSF 3/8"
acetaldehyde	(H)	3.5E-2	3.5E-2
acetone	(N)	3.2E-2	1.1E-2
acrolein	(H)	ND 4.6E-3	ND 3.5E-3
benzene	(H)	ND 1.5E-3	ND 1.5E-3
bromomethane	(H)	ND 1.8E-3	ND 1.8E-3
camphene		ND 5.3E-2	ND 5.2E-2
3-carene		ND 5.3E-2	ND 5.2E-2
chloroethane	(H)	ND 1.2E-3	ND 1.2E-3
chloroethene	(H)	ND 1.2E-3	ND 1.2E-3
cumene	(H)	ND 4.6E-2	ND 4.6E-2
p-cymene		ND 5.2E-2	ND 5.1E-2
1,2-dichloroethane	(H)	ND 1.9E-3	ND 1.9E-3
cis-1,2-dichloroethylene		ND 1.9E-3	ND 1.8E-3
formaldehyde	(H)	4.0E-2	2.6E-2
limonene		ND 5.3E-2	ND 5.2E-2
p-mentha-1,5-diene		ND 5.3E-2	ND 5.2E-2
methanol	(H)	6.6E-2	7.9E-2
methyl ethyl ketone (MEK)	(H)	ND 5.8E-3	ND 4.4E-3
methyl isobutyl ketone	(H)	ND 5.4E-3	1.4E-3
methylene chloride	(H)	ND 1.6E-3	ND 1.6E-3
phenol	(H)	4.9E-3	ND 7.1E-3
alpha-pinene		ND 5.3E-2	ND 5.2E-2
beta-pinene		ND 5.3E-2	ND 5.2E-2
propionaldehyde	(H)	1.7E-2	2.7E-3
styrene	(H)	ND 2.0E-3	ND 2.0E-3
toluene	(H)	ND 1.8E-3	ND 1.8E-3
1,2,4-trichlorobenzene	(H)	ND 3.5E-3	ND 3.5E-3
m,p-xylene	(H)	ND 2.0E-3	ND 2.0E-3
o-xylene	(H)	ND 2.0E-3	ND 2.0E-3
THC as Carbon		1.7E-1	1.8E-1
Total HAPs		1.6E-1	1.4E-1
Total Terpenes		0.0E+0	0.0E+0
Production Rate (MSF 3/8 /hr)		18.0	18.0
Vol. Flow Rate (DSCFM)		25505	25505
Source Moisture (%)		27.8	27.8
Source Temp (°C)		67.6	67.6

ND x.xEx = Below Detection Limit of x.xEx; H = CAA HAP; AI = Analytical Interference; ODTH = Oven Dried Tons per Hour; N = Not a HAP or VOC as defined by US EPA; MSF = 1000 square feet

Table 5.3.3. Press Emissions, Mill 115			
Analyte		Powered Vent Above No. 1 Press (115-1PB1) lb/MSF 3/8"	
acetaldehyde	(H)	ND	5.0E-3
acetone	(N)		6.4E-3
acrolein	(H)	ND	4.4E-3
benzene	(H)	ND	1.5E-3
bromomethane	(H)	ND	1.9E-3
camphene		ND	5.3E-2
3-carene		ND	5.3E-2
chloroethane	(H)	ND	1.3E-3
chloroethene	(H)	ND	1.2E-3
cumene	(H)	ND	4.7E-2
p-cymene		ND	5.3E-2
1,2-dichloroethane	(H)	ND	1.9E-3
cis-1,2-dichloroethylene		ND	1.9E-3
formaldehyde	(H)	ND	1.4E-3
limonene		ND	5.3E-2
p-mentha-1,5-diene		ND	5.3E-2
methanol	(H)		5.3E-2
methyl ethyl ketone (MEK)	(H)	ND	5.5E-3
methyl isobutyl ketone	(H)	ND	5.2E-3
methylene chloride	(H)	ND	1.7E-3
phenol	(H)	ND	8.9E-3
alpha-pinene		ND	5.3E-2
beta-pinene		ND	5.3E-2
propionaldehyde	(H)	ND	5.0E-3
styrene	(H)	ND	2.0E-3
toluene	(H)	ND	1.8E-3
1,2,4-trichlorobenzene	(H)	ND	3.5E-3
m,p-xylene	(H)	ND	2.1E-3
o-xylene	(H)	ND	2.1E-3
THC as Carbon			4.2E-2
Total HAPs			5.3E-2
Total Terpenes			0.0E+0
Production Rate (MSF 3/8 /hr)			15.0
Vol. Flow Rate (DSCFM)			21262
Source Moisture (%)			1.6
Source Temp (°C)			40.0

ND x.xEx = Below Detection Limit of x.xEx; H = CAA HAP; AI = Analytical Interference; ODTH = Oven Dried Tons per Hour; N = Not a HAP or VOC as defined by US EPA; MSF = 1000 square feet

Table 5.3.4. Softwood Veneer Dryer WESP Quench Water (XDV1L), Mill 115				
	Run 1	Run 2	Run 3	Average
Date	7/24/97	7/24/97	7/24/97	
Time	1230	1500	1730	
Compound, mg/L				
Acetaldehyde	3.23	3.87	3.56	3.55
Acetone	10.23	8.40	8.85	9.16
Acrolein	AI	AI	AI	AI
Methanol	7.76	8.50	8.62	8.29
Methyl Ethyl Ketone	ND 0.15	1.77	0.59	0.79
Methyl Isobutyl Ketone	ND 0.12	0.81	0.31	0.37
Phenol	ND 0.26	ND 0.26	ND 0.26	ND 0.26
Propionaldehyde	0.46	ND 0.14	0.41	0.29

AI = Analytical Interference
ND - below detection limit of x.xx

5.4 Results of Tests at Mill 155

At Mill 155, tests to measure volatile organic HAP and VOC emissions were conducted on the combined dryer exhaust, the veneer dryer EFB, the no. 3 dryer cooling section exhaust and the hot press. The results of these tests are contained in Tables 5.4.1 through 5.4.3, respectively. In Table 5.4.1, the emissions from the no. 3 dryer veneer cooling section have been added to the combined veneer dryer heated zone emissions to yield a total combined dryer emission rate. Values provided for the total emission rate are based on an assumption that the one measured veneer cooling section is representative of all three cooling sections. In addition to the individual compound results, total HAP and total VOC values are presented in Tables 5.4.1 through 5.4.3. Source physical parameters (volumetric flow rate, moisture content and dry bulb temperature) and unit production rates are also given for each source. Detailed information on process operating conditions during the tests is included in Section 4.4.

Table 5.4.1. Combined Dryer Emissions, Mill 155							
Analyte		Combined Veneer Dryer Exhaust (155-XDV2) lb/MSF 3/8"		Dryer No. 3 Veneer Cooling Section Exhaust (155-3DV3) lb/MSF 3/8"		* Combined Dryers Total Emissions lb/MSF 3/8"	
acetaldehyde	(H)		7.4E-4		1.5E-3		2.3E-3
acetone	(N)		7.8E-3		4.3E-3		1.2E-2
acrolein	(H)	ND	2.1E-3	ND	3.6E-3	ND	5.7E-3
benzene	(H)	ND	6.7E-4	ND	1.5E-3	ND	2.1E-3
bromomethane	(H)	ND	8.2E-4	ND	1.8E-3	ND	2.6E-3
camphene		ND	2.3E-2	ND	5.1E-2	ND	7.5E-2
3-carene		ND	2.3E-2	ND	5.1E-2	ND	7.5E-2
chloroethane	(H)	ND	5.5E-4	ND	1.2E-3	ND	1.8E-3
chloroethene	(H)	ND	5.4E-4	ND	1.2E-3	ND	1.7E-3
cumene	(H)	ND	2.1E-2	ND	4.5E-2	ND	6.6E-2
p-cymene		ND	2.3E-2	ND	5.1E-2	ND	7.4E-2
1,2-dichloroethane	(H)	ND	8.5E-4	ND	1.9E-3	ND	2.7E-3
cis-1,2-dichloroethylene		ND	8.3E-4	ND	1.8E-3	ND	2.7E-3
formaldehyde	(H)		7.3E-3	ND	9.4E-4		7.3E-3
limonene		ND	2.3E-2	ND	5.1E-2	ND	7.5E-2
p-mentha-1,5-diene		ND	2.3E-2	ND	5.1E-2	ND	7.5E-2
methanol	(H)		4.7E-2	ND	3.8E-3		4.7E-2
methyl ethyl ketone (MEK)	(H)	ND	2.6E-3	ND	4.6E-3	ND	7.1E-3
methyl isobutyl ketone	(H)	ND	2.4E-3	ND	4.4E-3	ND	6.9E-3
methylene chloride	(H)	ND	7.3E-4	ND	1.6E-3	ND	2.3E-3
phenol	(H)		1.5E-3	ND	7.3E-3		1.5E-3
alpha-pinene		ND	2.3E-2	ND	5.1E-2	ND	7.5E-2
beta-pinene		ND	2.3E-2	ND	5.1E-2	ND	7.5E-2
propionaldehyde	(H)	ND	2.3E-3	ND	4.1E-3	ND	6.4E-3
styrene	(H)	ND	9.0E-4	ND	2.0E-3	ND	2.9E-3
toluene	(H)	ND	7.9E-4	ND	1.7E-3	ND	2.5E-3
1,2,4-trichlorobenzene	(H)	ND	1.6E-3	ND	3.4E-3	ND	5.0E-3
m,p-xylene	(H)		3.8E-4		2.9E-3		3.3E-3
o-xylene	(H)	ND	9.1E-4		1.8E-3		1.8E-3
THC as Carbon			1.0E-1				
Total HAPs			5.7E-2		6.2E-3		6.4E-2
Total Terpenes			0.0E+0		0.0E+0		0.0E+0
Production Rate (MSF 3/8 /hr)			16.6		6.4		
Vol. Flow Rate (DSCFM)			11516		9748		
Source Moisture (%)			15.6		1.6		
Source Temp (°C)			72.2		32.4		

ND x.xEx = Below Detection Limit of x.xEx; H = CAA HAP; AI = Analytical Interference; ODTH = Oven Dried Tons per Hour; N = Not a HAP or VOC as defined by US EPA; MSF = 1000 square feet; * = Dryer No. 3 Veneer Cooling Section Exhaust assumed to be representative of all three dryers.

Table 5.4.2. EFB Emissions, Mill 155			
Analyte		EFB Inlet (155-XDV2) lb/MSF 3/8"	EFB Outlet (155-XDV1) lb/MSF 3/8"
acetaldehyde	(H)	7.4E-4	7.1E-4
acetone	(N)	7.8E-3	7.6E-3
acrolein	(H)	ND 2.1E-3	ND 1.7E-3
benzene	(H)	ND 6.7E-4	ND 6.7E-4
bromomethane	(H)	ND 8.2E-4	ND 8.1E-4
camphene		ND 2.3E-2	ND 2.3E-2
3-carene		ND 2.3E-2	ND 2.3E-2
chloroethane	(H)	ND 5.5E-4	ND 5.5E-4
chloroethene	(H)	ND 5.4E-4	ND 5.3E-4
cumene	(H)	ND 2.1E-2	ND 2.1E-2
p-cymene		ND 2.3E-2	ND 2.3E-2
1,2-dichloroethane	(H)	ND 8.5E-4	ND 8.5E-4
cis-1,2-dichloroethylene		ND 8.3E-4	ND 8.3E-4
formaldehyde	(H)	7.3E-3	1.1E-2
limonene		ND 2.3E-2	ND 2.3E-2
p-mentha-1,5-diene		ND 2.3E-2	ND 2.3E-2
methanol	(H)	4.7E-2	4.4E-2
methyl ethyl ketone (MEK)	(H)	ND 2.6E-3	ND 2.2E-3
methyl isobutyl ketone	(H)	ND 2.4E-3	ND 2.1E-3
methylene chloride	(H)	ND 7.3E-4	ND 7.3E-4
phenol	(H)	1.5E-3	ND 3.5E-3
alpha-pinene		ND 2.3E-2	ND 2.3E-2
beta-pinene		ND 2.3E-2	ND 2.3E-2
propionaldehyde	(H)	ND 2.3E-3	ND 2.0E-3
styrene	(H)	ND 9.0E-4	ND 8.9E-4
toluene	(H)	ND 7.9E-4	ND 7.9E-4
1,2,4-trichlorobenzene	(H)	ND 1.6E-3	ND 1.5E-3
m,p-xylene	(H)	3.8E-4	3.7E-4
o-xylene	(H)	ND 9.1E-4	ND 9.1E-4
THC as Carbon		1.0E-1	1.1E-1
Total HAPs		5.7E-2	5.6E-2
Total Terpenes		0.0E+0	0.0E+0
Production Rate (MSF 3/8 /hr)		16.6	16.6
Vol. Flow Rate (DSCFM)		11516	11516
Source Moisture (%)		15.6	15.6
Source Temp (°C)		72.2	72.2

ND x.xEx = Below Detection Limit of x.xEx; H = CAA HAP; AI = Analytical Interference; ODTH = Oven Dried Tons per Hour; N = Not a HAP or VOC as defined by US EPA; MSF = 1000 square feet

Table 5.4.3. Press Emissions, Mill 155			
Analyte		Powered Vent Over No. 1 Press (155-1PB1) lb/MSF 3/8"	
acetaldehyde	(H)	ND	8.7E-3
acetone	(N)		3.4E-2
acrolein	(H)	ND	7.8E-3
benzene	(H)	ND	3.1E-3
bromomethane	(H)	ND	3.7E-3
camphene		ND	1.1E-1
3-carene		ND	1.1E-1
chloroethane	(H)	ND	2.5E-3
chloroethene	(H)	ND	2.5E-3
cumene	(H)	ND	9.4E-2
p-cymene		ND	1.1E-1
1,2-dichloroethane	(H)	ND	3.9E-3
cis-1,2-dichloroethylene		ND	3.8E-3
formaldehyde	(H)		3.8E-3
limonene		ND	1.1E-1
p-mentha-1,5-diene		ND	1.1E-1
methanol	(H)		3.0E-2
methyl ethyl ketone (MEK)	(H)	ND	9.8E-3
methyl isobutyl ketone	(H)		7.9E-3
methylene chloride	(H)	ND	3.3E-3
phenol	(H)	ND	1.6E-2
alpha-pinene		ND	1.1E-1
beta-pinene		ND	1.1E-1
propionaldehyde	(H)	ND	8.8E-3
styrene	(H)	ND	4.1E-3
toluene	(H)	ND	3.6E-3
1,2,4-trichlorobenzene	(H)	ND	7.1E-3
m,p-xylene	(H)	ND	4.2E-3
o-xylene	(H)	ND	4.2E-3
THC as Carbon			4.8E-2
Total Non-HAPs			4.2E-2
Total Terpenes			0.0E+0
Production Rate (MSF 3/8 /hr)			12.8
Vol. Flow Rate (DSCFM)			42437
Source Moisture (%)			1.4
Source Temp (°C)			24.2

ND x.xEx = Below Detection Limit of x.xEx; H = CAA HAP; AI = Analytical Interference; ODTH = Oven Dried Tons per Hour; N = Not a HAP or VOC as defined by US EPA; MSF = 1000 square feet

5.5 Results of Tests at Mill 165

At Mill 165, tests to measure volatile organic HAP and VOC emissions were conducted on the combined veneer dryer exhaust, a single cooling section exhaust, the veneer dryer RTO, the hot press, the radio frequency dryer, the veneer dry trim chipper exhaust and the panel dry trim chipper exhaust. The results of these tests are contained in Tables 5.5.1 through 5.5.4, respectively. In Table 5.5.1, the emissions from the no. 4 dryer veneer cooling section were not added to the combined dryer heated zone emissions to yield a total combined dryer emission rate, as was done for other dryers in this study. In this case, only one (of two) cooling section stacks was tested and the dryer furnish type and production rate did not adequately represent the combined dryers. In addition to the individual compound results, total HAP and total VOC values are presented in Tables 5.5.1 through 5.5.4. Source physical parameters (volumetric flow rate, moisture content and dry bulb temperature) and unit production rates are also given for each source. Detailed information on process operating conditions during the tests is included in Section 4.5. The alkane and carbon monoxide analysis results for the canister samples collected from the no. 4 veneer dryer (4DV4), and the inlet (XDV2) and outlet (XDV1) of the veneer dryer RTO are presented in Table 5.5.5.

Table 5.5.1. Combined Dryer Exhaust, Mill 165			
Analyte		Combined Dryer Exhaust at Inlet to RTO (165-XDV2) lb/MSF 3/8"	No. 4 Dryer Cooling Section Exhaust No. 1 (165-4DV4) lb/MSF 3/8"
acetaldehyde	(H)	8.0E-3	ND 6.5E-3
acetone	(N)	8.1E-3	2.5E-3
acrolein	(H)	ND 2.2E-3	ND 5.8E-3
benzene	(H)	ND 8.8E-4	ND 2.3E-3
bromomethane	(H)	ND 1.1E-3	ND 2.7E-3
camphene		ND 3.1E-2	ND 7.9E-2
3-carene		ND 3.1E-2	ND 7.9E-2
chloroethane	(H)	ND 7.3E-4	ND 1.9E-3
chloroethene	(H)	ND 7.1E-4	ND 1.8E-3
cumene	(H)	ND 2.7E-2	ND 7.0E-2
p-cymene		ND 3.0E-2	ND 7.8E-2
1,2-dichloroethane	(H)	ND 1.1E-3	ND 2.9E-3
cis-1,2-dichloroethylene		ND 1.1E-3	ND 2.8E-3
formaldehyde	(H)	1.9E-2	2.5E-3
limonene		4.3E-2	ND 7.9E-2
p-mentha-1,5-diene		ND 3.1E-2	ND 7.9E-2
methanol	(H)	2.6E-2	1.9E-2
methyl ethyl ketone (MEK)	(H)	ND 2.7E-3	ND 7.3E-3
methyl isobutyl ketone	(H)	ND 2.7E-3	ND 7.1E-3
methylene chloride	(H)	ND 9.6E-4	ND 2.5E-3
phenol	(H)	1.6E-3	ND 1.2E-2
alpha-pinene		1.5E+0	8.9E-2
beta-pinene		4.5E-1	ND 7.9E-2
propionaldehyde	(H)	ND 2.4E-3	ND 6.6E-3
styrene	(H)	ND 1.2E-3	ND 3.0E-3
toluene	(H)	ND 1.0E-3	ND 2.7E-3
1,2,4-trichlorobenzene	(H)	ND 2.0E-3	ND 5.2E-3
m,p-xylene	(H)	ND 1.2E-3	ND 3.1E-3
o-xylene	(H)	ND 1.2E-3	ND 3.1E-3
THC as Carbon		3.2E+0	
Total HAPs		5.5E-2	2.1E-2
Total Terpenes		1.9E+0	8.9E-2
Production Rate (MSF 3/8 /hr)		47.3	4.9
Vol. Flow Rate (DSCFM)		44947	11566
Source Moisture (%)		31.0	1.6
Source Temp (°C)		172.7	38.1

ND x.xEx = Below Detection Limit of x.xEx; H = CAA HAP; AI = Analytical Interference; ODTH = Oven

Table 5.5.2. RTO Emissions, Mill 165			
Analyte		RTO Inlet (165-XDV2) lb/MSF 3/8"	RTO Outlet (165-XDV1) lb/MSF 3/8"
acetaldehyde	(H)	8.0E-3	9.0E-4
acetone	(N)	8.1E-3	1.1E-3
acrolein	(H)	ND 2.2E-3	ND 2.5E-3
benzene	(H)	ND 8.8E-4	ND 9.2E-4
bromomethane	(H)	ND 1.1E-3	ND 1.1E-3
camphene		ND 3.1E-2	ND 3.2E-2
3-carene		ND 3.1E-2	ND 3.2E-2
chloroethane	(H)	ND 7.3E-4	ND 7.6E-4
chloroethene	(H)	ND 7.1E-4	ND 7.3E-4
cumene	(H)	ND 2.7E-2	ND 2.8E-2
p-cymene		ND 3.0E-2	ND 3.2E-2
1,2-dichloroethane	(H)	ND 1.1E-3	ND 1.2E-3
cis-1,2-dichloroethylene		ND 1.1E-3	ND 1.1E-3
formaldehyde	(H)	1.9E-2	4.3E-4
limonene		4.3E-2	ND 3.2E-2
p-mentha-1,5-diene		ND 3.1E-2	ND 3.2E-2
methanol	(H)	2.6E-2	1.3E-3
methyl ethyl ketone (MEK)	(H)	ND 2.7E-3	ND 3.1E-3
methyl isobutyl ketone	(H)	ND 2.7E-3	ND 3.0E-3
methylene chloride	(H)	ND 9.6E-4	ND 1.0E-3
phenol	(H)	1.6E-3	2.1E-3
alpha-pinene		1.5E+0	3.8E-2
beta-pinene		4.5E-1	ND 3.2E-2
propionaldehyde	(H)	ND 2.4E-3	ND 2.8E-3
styrene	(H)	ND 1.2E-3	ND 1.2E-3
toluene	(H)	ND 1.0E-3	ND 1.1E-3
1,2,4-trichlorobenzene	(H)	ND 2.0E-3	ND 2.1E-3
m,p-xylene	(H)	ND 1.2E-3	ND 1.2E-3
o-xylene	(H)	ND 1.2E-3	ND 1.2E-3
THC as Carbon		3.2E+0	1.7E-1
Total HAPs		5.5E-2	4.7E-3
Total Terpenes		1.9E+0	3.8E-2
Production Rate (MSF 3/8 /hr)		47.3	47.3
Vol. Flow Rate (DSCFM)		44947	49754
Source Moisture (%)		31.0	28.7
Source Temp (°C)		172.7	194.8

ND x.xEx = Below Detection Limit of x.xEx; H = CAA HAP; AI = Analytical Interference; ODTH = Oven Dried Tons per Hour; N = Not a HAP or VOC as defined by US EPA; MSF = 1000 square feet

Table 5.5.3. Combined Press Emissions, Mill 165			
Analyte		Combined Press Exhaust (165-XPB1) lb/MSF 3/8	
acetaldehyde	(H)		3.6E-3
acetone	(N)		3.3E-3
acrolein	(H)	ND	1.0E-3
benzene	(H)	ND	4.2E-4
bromomethane	(H)	ND	5.1E-4
camphene		ND	1.5E-2
3-carene		ND	1.5E-2
chloroethane	(H)	ND	3.5E-4
chloroethene	(H)	ND	3.3E-4
cumene	(H)	ND	1.3E-2
p-cymene		ND	1.4E-2
1,2-dichloroethane	(H)	ND	5.3E-4
cis-1,2-dichloroethylene		ND	5.2E-4
formaldehyde	(H)		3.5E-4
limonene		ND	1.5E-2
p-mentha-1,5-diene		ND	1.5E-2
methanol	(H)		9.8E-2
methyl ethyl ketone (MEK)	(H)	ND	1.3E-3
methyl isobutyl ketone	(H)	ND	1.3E-3
methylene chloride	(H)	ND	4.5E-4
phenol	(H)	ND	2.1E-3
alpha-pinene			1.6E-1
beta-pinene			5.2E-2
propionaldehyde	(H)	ND	1.2E-3
styrene	(H)	ND	5.6E-4
toluene	(H)	ND	4.9E-4
1,2,4-trichlorobenzene	(H)	ND	9.7E-4
m,p-xylene	(H)	ND	5.7E-4
o-xylene	(H)	ND	5.7E-4
THC as Carbon			3.2E-1
Total HAPs			1.0E-1
Total Terpenes			2.1E-1
Production Rate (MSF 3/8 /hr)			37.6
Vol. Flow Rate (DSCFM)			15944
Source Moisture (%)			3.3
Source Temp (°C)			41.7

ND x.xEx = Below Detection Limit of x.xEx; H = CAA HAP; AI = Analytical Interference; ODTH = Oven Dried Tons per Hour; N = Not a HAP or VOC as defined by US EPA; MSF = 1000 square feet

Table 5.5.4. Miscellaneous Source Emissions, Mill 165

Analyte		RF Re-Dryer Exhaust (165-1DM1) lb/MSF 3/8"	Veneer Dry Trim Chipper Cyclone Exhaust (165-1WD1) lb/MSF 3/8"	Panel Dry Trim Chipper Cyclone Exhaust (165-1WR1) lb/MSF 3/8"
acetaldehyde	(H)	2.9E-3	4.3E-4	ND 1.6E-3
acetone	(N)	1.4E-3	4.3E-4	ND 1.6E-3
acrolein	(H)	ND 6.8E-4	ND 1.0E-3	ND 1.4E-3
benzene	(H)	ND 2.5E-4	ND 4.1E-4	ND 5.5E-4
bromomethane	(H)	ND 3.0E-4	ND 4.9E-4	ND 6.7E-4
camphene		ND 8.7E-3	ND 1.4E-2	ND 1.9E-2
3-carene		ND 8.7E-3	ND 1.4E-2	ND 1.9E-2
chloroethane	(H)	ND 2.1E-4	ND 3.3E-4	ND 4.6E-4
chloroethene	(H)	ND 2.0E-4	ND 3.2E-4	ND 4.4E-4
cumene	(H)	ND 7.7E-3	ND 1.2E-2	ND 1.7E-2
p-cymene		ND 8.6E-3	ND 1.4E-2	ND 1.9E-2
1,2-dichloroethane	(H)	ND 3.2E-4	ND 5.1E-4	ND 7.0E-4
cis-1,2-dichloroethylene		ND 3.1E-4	ND 5.0E-4	ND 6.9E-4
formaldehyde	(H)	6.5E-4	2.4E-4	ND 4.2E-4
limonene		3.6E-3	ND 1.4E-2	ND 1.9E-2
p-mentha-1,5-diene		ND 8.7E-3	ND 1.4E-2	ND 1.9E-2
methanol	(H)	4.8E-3	8.7E-3	7.5E-3
methyl ethyl ketone (MEK)	(H)	ND 8.6E-4	ND 1.3E-3	ND 1.8E-3
methyl isobutyl ketone	(H)	ND 8.2E-4	ND 1.2E-3	ND 1.7E-3
methylene chloride	(H)	ND 2.7E-4	ND 4.4E-4	ND 6.0E-4
phenol	(H)	ND 1.4E-3	1.5E-3	ND 2.9E-3
alpha-pinene		3.3E-1	3.2E-2	3.6E-2
beta-pinene		1.1E-1	ND 1.4E-2	ND 1.9E-2
propionaldehyde	(H)	ND 7.7E-4	ND 1.1E-3	ND 1.6E-3
styrene	(H)	ND 3.3E-4	ND 5.4E-4	ND 7.4E-4
toluene	(H)	ND 2.9E-4	ND 4.8E-4	ND 6.5E-4
1,2,4-trichlorobenzene	(H)	ND 5.8E-4	ND 9.4E-4	ND 1.3E-3
m,p-xylene	(H)	ND 3.4E-4	ND 5.5E-4	ND 7.5E-4
o-xylene	(H)	ND 3.4E-4	ND 5.5E-4	ND 7.5E-4
THC as Carbon		4.9E-1	5.9E-2	5.6E-2
Total HAPs		8.4E-3	1.1E-2	7.5E-3
Total Terpenes		4.5E-1	3.2E-2	3.6E-2
Production Rate (MSF 3/8 /hr)		4.0	89.9	48.1
Vol. Flow Rate (DSCFM)		1039	36216	28129
Source Moisture (%)		12.0	1.2	1.2
Source Temp (°C)		94.5	28.7	33.6

ND x.xEx = Below Detection Limit of x.xEx; H = CAA HAP; AI = Analytical Interference; ODTH = Oven Dried Tons per Hour; N = Not a HAP or VOC as defined by US EPA; MSF = 1000 square feet

Table 5.5.5 Alkane and Carbon Monoxide Emission Test Results, Mill 165					
Source	Run No.	Methane		Carbon Monoxide	
		ppmV*	lb/MSF 3/8"	ppmV*	lb/MSF 3/8"
4DV4	1	NA	NA	1.6	0.02
	2	NA	NA	3.1	0.03
	3	NA	NA	ND (<1.5)	ND (<0.02)
XDV1	1	26	0.05	23	0.11
	2	NA	NA	18	0.07
	3	NA	NA	16	0.08
XDV2	1	3.3	0.01	10	0.04
	2	NA	NA	10	0.04
	3	NA	NA	10	0.04

*as received, ~1% moisture
Ethane, propane, butane, pentane, and hexane were not detected.
The detection limit for alkane analysis is 1.0 ppmV.
NA = not analyzed

5.6 Results of Tests at Mill 170

At Mill 170, tests to measure volatile organic HAP and VOC emissions were conducted on the no. 2 veneer dryer, the no. 3 veneer dryer, the veneer dryer RTO, the hot press, skinner saw and sanders. The results of these tests are contained in Tables 5.6.1 through 5.6.5, respectively. In Table 5.6.1, the emissions from the three cooling section vents on the no. 2 veneer dryer have been added to the combined no. 2 dryer heated zone emissions to yield a total combined dryer emission rate. The board cooling section vents associated with the no. 3 dryer were not tested. In addition to the individual compound results, total HAP and total VOC values are presented in Tables 5.6.1 through 5.6.5. Source physical parameters (volumetric flow rate, moisture content and dry bulb temperature) and unit production rates are also given for each source. Detailed information on process conditions during the tests is included in Section 4.6. The alkane and carbon monoxide analysis results for the canister samples collected from the dryer RTO inlet (XDV2) and outlet (XDV1) are presented in Table 5.6.6.

Table 5.6.1. No. 2 Veneer Dryer Emissions, Mill 170

Analyte		Dryer Heated Section Vent (170-2DV3) lb/MSF 3/8"	Veneer Cooling Section Vents: No. 1 (170-2DV4) lb/MSF 3/8"	Veneer Cooling Section Vents: No. 2 (170-2DV5) lb/MSF 3/8"	Veneer Cooling Section Vents: No. 3 (170-2DV6) lb/MSF 3/8"	Total Veneer Cooling Section Emissions lb/MSF 3/8"	Total Dryer Emissions lb/MSF 3/8"
acetaldehyde	(H)	1.5E-2	ND 1.6E-3	ND 1.6E-3	ND 1.6E-3	ND 4.8E-3	1.5E-2
acetone	(N)	1.7E-2	1.2E-3	ND 1.7E-3	9.4E-4	2.1E-3	1.9E-2
acrolein	(H)	ND 1.1E-3	ND 1.4E-3	ND 1.5E-3	ND 1.4E-3	ND 4.4E-3	ND 5.5E-3
benzene	(H)	ND 4.6E-4	ND 5.8E-4	ND 5.6E-4	ND 6.4E-4	ND 1.8E-3	ND 2.2E-3
bromomethane	(H)	ND 5.6E-4	ND 7.0E-4	ND 6.8E-4	ND 7.8E-4	ND 2.2E-3	ND 2.7E-3
camphene		ND 1.6E-2	ND 2.0E-2	ND 2.0E-2	ND 2.2E-2	ND 6.2E-2	ND 7.8E-2
3-carene		ND 1.6E-2	ND 2.0E-2	ND 2.0E-2	ND 2.2E-2	ND 6.2E-2	ND 7.8E-2
chloroethane	(H)	ND 3.8E-4	ND 4.8E-4	ND 4.6E-4	ND 5.3E-4	ND 1.5E-3	ND 1.9E-3
chloroethene	(H)	ND 3.7E-4	ND 4.6E-4	ND 4.5E-4	ND 5.1E-4	ND 1.4E-3	ND 1.8E-3
cumene	(H)	ND 1.4E-2	ND 1.8E-2	ND 1.7E-2	ND 2.0E-2	ND 5.5E-2	ND 6.9E-2
p-cymene		ND 1.6E-2	ND 2.0E-2	ND 1.9E-2	ND 2.2E-2	ND 6.1E-2	ND 7.7E-2
1,2-dichloroethane	(H)	ND 5.8E-4	ND 7.3E-4	ND 7.1E-4	ND 8.1E-4	ND 2.3E-3	ND 2.8E-3
cis-1,2-dichloroethylene		ND 5.7E-4	ND 7.2E-4	ND 6.9E-4	ND 8.0E-4	ND 2.2E-3	ND 2.8E-3
formaldehyde	(H)	6.6E-3	1.7E-4	1.6E-4	5.8E-4	9.0E-4	7.5E-3
limonene		2.5E-1	ND 2.0E-2	ND 2.0E-2	ND 2.2E-2	ND 6.2E-2	2.5E-1
p-mentha-1,5-diene		2.4E-2	ND 2.0E-2	ND 2.0E-2	ND 2.2E-2	ND 6.2E-2	2.4E-2
methanol	(H)	2.5E-2	1.4E-3	ND 1.6E-3	ND 1.5E-3	1.4E-3	2.6E-2
methyl ethyl ketone (MEK)	(H)	ND 1.4E-3	ND 1.8E-3	ND 1.9E-3	ND 1.8E-3	ND 5.5E-3	ND 6.9E-3
methyl isobutyl ketone	(H)	ND 1.4E-3	ND 1.8E-3	ND 1.8E-3	ND 1.8E-3	ND 5.4E-3	ND 6.7E-3
methylene chloride	(H)	ND 5.0E-4	ND 6.3E-4	ND 6.1E-4	ND 7.0E-4	ND 1.9E-3	ND 2.4E-3
phenol	(H)	ND 2.2E-3	ND 2.9E-3	ND 3.0E-3	ND 2.9E-3	ND 8.8E-3	ND 1.1E-2
alpha-pinene		2.7E+0	1.5E-2	ND 2.0E-2	ND 2.2E-2	1.5E-2	2.7E+0
beta-pinene		7.1E-1	ND 2.0E-2	ND 2.0E-2	ND 2.2E-2	ND 6.2E-2	7.1E-1
propionaldehyde	(H)	ND 1.3E-3	ND 1.6E-3	ND 1.7E-3	ND 1.6E-3	ND 4.9E-3	ND 6.2E-3
styrene	(H)	ND 6.1E-4	ND 7.7E-4	ND 7.5E-4	ND 8.6E-4	ND 2.4E-3	ND 3.0E-3
toluene	(H)	ND 5.4E-4	ND 6.8E-4	ND 6.6E-4	ND 7.6E-4	ND 2.1E-3	ND 2.6E-3
1,2,4-trichlorobenzene	(H)	ND 1.1E-3	ND 1.3E-3	ND 1.3E-3	ND 1.5E-3	ND 4.1E-3	ND 5.2E-3
m,p-xylene	(H)	ND 6.3E-4	ND 7.9E-4	ND 7.6E-4	ND 8.7E-4	ND 2.4E-3	ND 3.0E-3
o-xylene	(H)	ND 6.3E-4	ND 7.9E-4	ND 7.6E-4	ND 8.7E-4	ND 2.4E-3	ND 3.0E-3
THC as Carbon			3.9E-2	2.6E-2			
Total HAPs		4.6E-2	1.6E-3	1.6E-4	5.8E-4	2.3E-3	4.8E-2
Total Terpenes		3.7E+0	1.5E-2	0.0E+0	0.0E+0	1.5E-2	3.7E+0
Production Rate (MSF 3/8 /hr)		14.2	17.7	17.7	18.3		
Vol. Flow Rate (DSCFM)		6062	10299	10578	10928		
Source Moisture (%)		53.1	1.9	1.4	1.1		
Source Temp (°C)		165.6	38.0	37.3	29.5		

ND x.xEx = Below Detection Limit of x.xEx; H = CAA HAP; AI = Analytical Interference; ODTH = Oven Dried Tons per Hour; N = Not a HAP or VOC as defined by US EPA; MSF = 1000 square feet

Table 5.6.2. No. 3 Veneer Dryer Emissions, Mill 170			
Analyte		Combined Dryer Vent (170-3DV3) lb/MSF 3/8"	
acetaldehyde	(H)		2.0E-2
acetone	(N)		2.4E-2
acrolein	(H)	ND	1.5E-3
benzene	(H)	ND	5.8E-4
bromomethane	(H)	ND	7.0E-4
camphene		ND	2.0E-2
3-carene		ND	2.0E-2
chloroethane	(H)	ND	4.8E-4
chloroethene	(H)	ND	4.6E-4
cumene	(H)	ND	1.8E-2
p-cymene		ND	2.0E-2
1,2-dichloroethane	(H)	ND	7.3E-4
cis-1,2-dichloroethylene		ND	7.2E-4
formaldehyde	(H)		6.8E-3
limonene			2.0E-1
p-mentha-1,5-diene			1.7E-2
methanol	(H)		5.4E-2
methyl ethyl ketone (MEK)	(H)	ND	1.9E-3
methyl isobutyl ketone	(H)	ND	1.8E-3
methylene chloride	(H)	ND	6.3E-4
phenol	(H)		1.0E-3
alpha-pinene			1.9E+0
beta-pinene			4.8E-1
propionaldehyde	(H)	ND	1.7E-3
styrene	(H)	ND	7.7E-4
toluene	(H)	ND	6.8E-4
1,2,4-trichlorobenzene	(H)	ND	1.3E-3
m,p-xylene	(H)	ND	7.9E-4
o-xylene	(H)	ND	7.9E-4
THC as Carbon			
Total HAPs			8.1E-2
Total Terpenes			2.6E+0
Production Rate (MSF 3/8 /hr)			11.3
Vol. Flow Rate (DSCFM)			6891
Source Moisture (%)			30.5
Source Temp (°C)			169.5

ND x.xEx = Below Detection Limit of x.xEx; H = CAA HAP; AI = Analytical Interference; ODTH = Oven Dried Tons per Hour; N = Not a HAP or VOC as defined by US EPA; MSF = 1000 square feet

Table 5.6.3. RTO Emissions, Mill 170			
Analyte		RTO Inlet (170-XDV2) lb/MSF 3/8"	RTO Outlet (170-XDV1) lb/MSF 3/8"
acetaldehyde	(H)	1.5E-2	1.8E-3
acetone	(N)	1.5E-2	1.2E-3
acrolein	(H)	ND 9.2E-4	ND 9.4E-4
benzene	(H)	ND 3.5E-4	2.8E-4
bromomethane	(H)	ND 4.3E-4	ND 4.7E-4
camphene		ND 1.2E-2	ND 1.3E-2
3-carene		ND 1.2E-2	ND 1.3E-2
chloroethane	(H)	ND 2.9E-4	ND 3.2E-4
chloroethene	(H)	ND 2.8E-4	ND 3.1E-4
cumene	(H)	ND 1.1E-2	ND 1.2E-2
p-cymene		ND 1.2E-2	ND 1.3E-2
1,2-dichloroethane	(H)	ND 4.5E-4	ND 4.9E-4
cis-1,2-dichloroethylene		ND 4.4E-4	ND 4.8E-4
formaldehyde	(H)	8.2E-3	4.0E-3
limonene		1.5E-1	ND 1.3E-2
p-mentha-1,5-diene		1.7E-2	ND 1.3E-2
methanol	(H)	4.1E-2	2.4E-3
methyl ethyl ketone (MEK)	(H)	ND 1.2E-3	ND 1.2E-3
methyl isobutyl ketone	(H)	ND 1.1E-3	ND 1.2E-3
methylene chloride	(H)	ND 3.8E-4	ND 4.2E-4
phenol	(H)	8.4E-4	5.9E-3
alpha-pinene		2.1E+0	1.2E-2
beta-pinene		5.5E-1	ND 1.3E-2
propionaldehyde	(H)	ND 1.0E-3	ND 1.1E-3
styrene	(H)	ND 4.7E-4	ND 5.1E-4
toluene	(H)	ND 4.2E-4	ND 4.5E-4
1,2,4-trichlorobenzene	(H)	ND 8.2E-4	ND 8.9E-4
m,p-xylene	(H)	ND 4.8E-4	ND 5.2E-4
o-xylene	(H)	ND 4.8E-4	ND 5.2E-4
THC as Carbon		3.7E+0	9.9E-2
Total HAPs		6.5E-2	1.4E-2
Total Terpenes		2.8E+0	1.2E-2
Production Rate (MSF 3/8 /hr)		57.5	57.5
Vol. Flow Rate (DSCFM)		22196	23438
Source Moisture (%)		46.5	41.6
Source Temp (°C)		165.9	208.9

ND x.xEx = Below Detection Limit of x.xEx; H = CAA HAP; AI = Analytical Interference; ODTH = Oven Dried Tons per Hour; N = Not a HAP or VOC as defined by US EPA; MSF = 1000 square feet

Table 5.6.4. No. 3 Press Emissions, Mill 170			
Analyte		No. 3 Press Vent (170-3PB1) lb/MSF 3/8"	
acetaldehyde	(H)		1.2E-2
acetone	(N)		1.6E-2
acrolein	(H)	ND 1.6E-3	
benzene	(H)	ND 5.9E-4	
bromomethane	(H)	ND 7.2E-4	
camphene		ND 2.1E-2	
3-carene		ND 2.1E-2	
chloroethane	(H)	ND 4.9E-4	
chloroethene	(H)	ND 4.7E-4	
cumene	(H)	ND 1.8E-2	
p-cymene		ND 2.0E-2	
1,2-dichloroethane	(H)	ND 7.5E-4	
cis-1,2-dichloroethylene		ND 7.4E-4	
formaldehyde	(H)		3.8E-3
limonene			1.0E-2
p-mentha-1,5-diene		ND 2.1E-2	
methanol	(H)		3.3E-1
methyl ethyl ketone (MEK)	(H)	ND 2.0E-3	
methyl isobutyl ketone	(H)	ND 1.9E-3	
methylene chloride	(H)	ND 6.4E-4	
phenol	(H)		1.1E-3
alpha-pinene			1.6E-1
beta-pinene			5.3E-2
propionaldehyde	(H)	ND 1.8E-3	
styrene	(H)	ND 7.9E-4	
toluene	(H)	ND 7.0E-4	
1,2,4-trichlorobenzene	(H)	ND 1.4E-3	
m,p-xylene	(H)	ND 8.1E-4	
o-xylene	(H)	ND 8.1E-4	
THC as Carbon			3.2E-1
Total HAPs			3.4E-1
Total Terpenes			2.2E-1
Production Rate (MSF 3/8 /hr)			12.7
Vol. Flow Rate (DSCFM)			7554
Source Moisture (%)			4.0
Source Temp (°C)			41.6

ND x.xEx = Below Detection Limit of x.xEx; H = CAA HAP; Al = Analytical Interference; ODTH = Oven Dried Tons per Hour; N = Not a HAP or VOC as defined by US EPA; MSF = 1000 square feet

Table 5.6.5. Miscellaneous Source Emissions, Mill 170

Analyte		Sander Baghouse Vent (170-1SD1) lb/MSF 3/8"	Skinner Saw Outlet (170-XMW1) lb/MSF 3/8"
acetaldehyde	(H)	2.1E-3	4.3E-4
acetone	(N)	4.7E-3	1.9E-3
acrolein	(H)	ND 2.2E-3	ND 1.2E-3
benzene	(H)	ND 8.6E-4	ND 4.9E-4
bromomethane	(H)	ND 1.0E-3	ND 5.9E-4
camphene		ND 3.0E-2	ND 1.7E-2
3-carene		ND 3.0E-2	ND 1.7E-2
chloroethane	(H)	ND 7.1E-4	ND 4.0E-4
chloroethene	(H)	ND 6.8E-4	ND 3.9E-4
cumene	(H)	ND 2.6E-2	ND 1.5E-2
p-cymene		ND 2.9E-2	ND 1.7E-2
1,2-dichloroethane	(H)	ND 1.1E-3	ND 6.2E-4
cis-1,2-dichloroethylene		ND 1.1E-3	ND 6.1E-4
formaldehyde	(H)	1.8E-3	2.7E-4
limonene		ND 3.0E-2	ND 1.7E-2
p-mentha-1,5-diene		ND 3.0E-2	ND 1.7E-2
methanol	(H)	1.2E-2	1.2E-2
methyl ethyl ketone (MEK)	(H)	ND 2.7E-3	ND 1.6E-3
methyl isobutyl ketone	(H)	ND 2.7E-3	ND 1.5E-3
methylene chloride	(H)	ND 9.3E-4	ND 5.3E-4
phenol	(H)	ND 4.4E-3	ND 2.5E-3
alpha-pinene		1.2E-2	2.7E-2
beta-pinene		ND 3.0E-2	ND 1.7E-2
propionaldehyde	(H)	ND 2.5E-3	ND 1.4E-3
styrene	(H)	ND 1.1E-3	ND 6.5E-4
toluene	(H)	ND 1.0E-3	ND 5.8E-4
1,2,4-trichlorobenzene	(H)	ND 2.0E-3	ND 1.1E-3
m,p-xylene	(H)	ND 1.2E-3	ND 6.6E-4
o-xylene	(H)	ND 1.2E-3	ND 6.6E-4
THC as Carbon		1.5E-1	7.2E-2
Total HAPs		1.6E-2	1.3E-2
Total Terpenes		1.2E-2	2.7E-2
Production Rate (MSF 3/8 /hr)		55.3	69.9
Vol. Flow Rate (DSCFM)		40617	36408
Source Moisture (%)		2.3	2.3
Source Temp (°C)		29.1	29.1

ND x.xEx = Below Detection Limit of x.xEx; H = CAA HAP; AI = Analytical Interference; ODTH = Oven Dried Tons per Hour; N = Not a HAP or VOC as defined by US EPA; MSF = 1000 square feet

Table 5.6.6 Alkane and Carbon Monoxide Emission Test Results, Mill 170					
Source	Run No.	Methane		Carbon Monoxide	
		ppmV*	lb/MSF 3/8"	ppmV*	lb/MSF 3/8"
RTO Outlet (XDV1)	N1	10.5	1.04E-02	11.7	2.02E-02
	N2	11.1	1.19E-02	10.2	1.91E-02
	N3	25.9	2.58E-02	37.7	6.53E-02
RTO Inlet (XDV2)	D1**	5.28	5.19E-03	12.3	2.11E-02
	N1	5.26	5.17E-03	11.4	1.95E-02
	N2	4.59	4.71E-03	10.7	1.92E-02
	N3	4.78	4.25E-03	9.24	1.43E-02

*as received, ~1% moisture.
Ethane, propane, butane, pentane and hexane were not detected.
The detection limit for the alkane analysis is 1.0 ppmV.
The detection limit for the carbon monoxide analysis is 1.0 ppmV.
**duplicate

5.7 Results of Tests at Mill 188

At Mill 188, tests to measure volatile organic HAP and VOC emissions were conducted on the combined veneer dryer heated zone exhaust, before and after a wet ESP. Two wood furnishes, fresh Douglas-fir and seven-day-old Douglas-fir were used. The results of these tests are contained in Table 5.7.1. In addition to the individual compound results, total HAP and total VOC values are presented in Table 5.7.1. Source physical parameters (volumetric flow rate, moisture content and dry bulb temperature) and unit production rates are also given. Detailed information on process operating conditions during the tests is included in Section 4.7.

Table 5.7.1. Veneer Dryer WESP Emissions, Mill 188					
		Fresh Furnish		7 Day Old Furnish	
Analyte		WESP Inlet (188-XDV2) lb/MSF 3/8"	WESP Outlet (188-XDV1) lb/MSF 3/8"	WESP Inlet (188-XDV2) lb/MSF 3/8"	WESP Outlet (188-XDV1) lb/MSF 3/8"
acetaldehyde	(H)	6.8E-3	9.6E-3	4.8E-2	5.8E-2
acetone	(N)	4.3E-3	5.4E-3	9.3E-3	7.4E-3
acrolein	(H)	ND 2.7E-3	ND 2.6E-3	ND 4.3E-3	ND 3.8E-3
benzene	(H)	ND 1.1E-3	ND 1.0E-3	ND 1.6E-3	ND 1.5E-3
bromomethane	(H)	ND 1.3E-3	ND 1.2E-3	ND 1.9E-3	ND 1.8E-3
camphene		ND 3.9E-2	ND 3.5E-2	ND 5.6E-2	ND 5.2E-2
3-carene		ND 3.9E-2	ND 3.5E-2	ND 5.6E-2	ND 5.2E-2
chloroethane	(H)	ND 9.1E-4	ND 8.3E-4	ND 1.3E-3	ND 1.2E-3
chloroethene	(H)	ND 8.8E-4	ND 8.1E-4	ND 1.3E-3	ND 1.2E-3
cumene	(H)	ND 3.4E-2	ND 3.1E-2	ND 4.9E-2	ND 4.6E-2
p-cymene		ND 3.8E-2	ND 3.5E-2	ND 5.5E-2	ND 5.1E-2
1,2-dichloroethane	(H)	ND 1.4E-3	ND 1.3E-3	ND 2.0E-3	ND 1.9E-3
cis-1,2-dichloroethylene		ND 1.4E-3	ND 1.3E-3	ND 2.0E-3	ND 1.9E-3
formaldehyde	(H)	6.1E-3	1.2E-2	1.6E-2	1.1E-2
limonene		ND 3.9E-2	ND 3.5E-2	ND 5.6E-2	ND 5.2E-2
p-mentha-1,5-diene		ND 3.9E-2	ND 3.5E-2	ND 5.6E-2	ND 5.2E-2
methanol	(H)	1.2E-2	1.6E-2	4.9E-2	4.6E-2
methyl ethyl ketone (MEK)	(H)	ND 3.4E-3	ND 3.2E-3	ND 5.4E-3	ND 4.8E-3
methyl isobutyl ketone	(H)	ND 3.3E-3	ND 3.1E-3	ND 5.2E-3	ND 4.7E-3
methylene chloride	(H)	ND 1.2E-3	ND 1.1E-3	ND 1.7E-3	ND 1.6E-3
phenol	(H)	5.6E-3	5.3E-3	9.3E-3	7.9E-3
alpha-pinene		2.2E-1	2.4E-1	2.3E-1	2.1E-1
beta-pinene		ND 3.9E-2	ND 3.5E-2	ND 5.6E-2	ND 5.2E-2
propionaldehyde	(H)	ND 3.0E-3	ND 2.9E-3	ND 4.9E-3	ND 4.3E-3
styrene	(H)	ND 1.5E-3	ND 1.3E-3	ND 2.1E-3	ND 2.0E-3
toluene	(H)	ND 1.3E-3	ND 1.2E-3	ND 1.9E-3	ND 1.8E-3
1,2,4-trichlorobenzene	(H)	ND 2.6E-3	ND 2.3E-3	ND 3.7E-3	ND 3.5E-3
m,p-xylene	(H)	ND 1.5E-3	ND 1.4E-3	ND 2.2E-3	ND 2.0E-3
o-xylene	(H)	ND 1.5E-3	ND 1.4E-3	ND 2.2E-3	ND 2.0E-3
THC as Carbon		4.9E-1	5.1E-1	5.3E-1	5.0E-1
Total HAPs		3.0E-2	4.3E-2	1.2E-1	1.2E-1
Total Terpenes		2.2E-1	2.4E-1	2.3E-1	2.1E-1
Production Rate (MSF 3/8 /hr)		31.8	31.8	19.6	19.6
Vol. Flow Rate (DSCFM)		34200	34200	32000	32000
Source Moisture (%)		19.7	19.7	20.5	20.5
Source Temp (°C)		59.3	59.3	60.6	60.6

ND x.xEx = Below Detection Limit of x.xEx; H = CAA HAP; AI = Analytical Interference; ODTH = Oven Dried Tons per Hour; N = Not a HAP or VOC as defined by US EPA; MSF = 1000 square feet

5.8 Results of Tests at Mill 194

At Mill 194, tests to measure volatile organic HAP and VOC emissions were conducted on the no. 1 veneer dryer, the no. 2 veneer dryer, the veneer dryer RCO, the no. 1 hot press, and the no. 2 hot press. The results of these tests are contained in Tables 5.8.1 through 5.8.4, respectively. In Tables 5.8.1 and 5.8.2, the veneer cooling section vent emissions have been added to the dryer heated zone emissions to yield a total dryer emission rate. In addition to the individual compound results, total HAP and total VOC values are presented in Tables 5.8.1 through 5.8.4. Source physical parameters (volumetric flow rate, moisture content and dry bulb temperature) and unit production rates are also given for each source. Detailed information on process operating conditions during the tests is included in Section 4.8. The alkane and carbon monoxide analysis results for the canister samples collected from the veneer dryers and RCO are presented in Tables 5.8.5 and 5.8.6, respectively.

Table 5.8.1. No. 1 Dryer Emissions, Mill 194

Analyte		No. 1 Dryer Heated Zone Exhaust (194-1DV2) lb/MSF 3/8"	Veneer Cooling Section Vents: No. 3 (194-1DV3) lb/MSF 3/8"	Veneer Cooling Section Vents: No. 2 (194-1DV4) lb/MSF 3/8"	Veneer Cooling Section Vents: No. 1 (194-1DV5) lb/MSF 3/8"	Total Veneer Cooling Section Emissions lb/MSF 3/8"	Total Dryer Emissions lb/MSF 3/8"
acetaldehyde	(H)	3.8E-2	8.1E-4	ND 1.9E-3	ND 2.0E-3	8.1E-4	3.8E-2
acetone	(N)	6.0E-2	1.1E-3	ND 1.9E-3	6.2E-4	1.8E-3	6.2E-2
acrolein	(H)	1.2E-2	ND 1.6E-3	ND 1.7E-3	ND 1.7E-3	ND 5.1E-3	1.2E-2
benzene	(H)	7.8E-3	ND 6.6E-4	ND 6.0E-4	ND 6.7E-4	ND 1.9E-3	7.8E-3
bromomethane	(H)	ND 8.8E-4	ND 8.0E-4	ND 7.3E-4	ND 8.2E-4	ND 2.3E-3	ND 3.2E-3
camphene		ND 2.5E-2	ND 2.3E-2	ND 2.1E-2	ND 2.3E-2	ND 6.7E-2	ND 9.3E-2
3-carene		ND 2.5E-2	ND 2.3E-2	ND 2.1E-2	ND 2.3E-2	ND 6.7E-2	ND 9.3E-2
chloroethane	(H)	ND 6.0E-4	ND 5.4E-4	ND 4.9E-4	ND 5.6E-4	ND 1.6E-3	ND 2.2E-3
chloroethene	(H)	ND 5.8E-4	ND 5.3E-4	ND 4.8E-4	ND 5.4E-4	ND 1.5E-3	ND 2.1E-3
cumene	(H)	ND 2.2E-2	ND 2.0E-2	ND 1.8E-2	ND 2.1E-2	ND 5.9E-2	ND 8.2E-2
p-cymene		ND 2.5E-2	ND 2.3E-2	ND 2.1E-2	ND 2.3E-2	ND 6.6E-2	ND 9.1E-2
1,2-dichloroethane	(H)	ND 9.2E-4	ND 8.3E-4	ND 7.6E-4	ND 8.5E-4	ND 2.4E-3	ND 3.4E-3
cis-1,2-dichloroethylene		ND 9.0E-4	ND 8.2E-4	ND 7.4E-4	ND 8.4E-4	ND 2.4E-3	ND 3.3E-3
formaldehyde	(H)	8.7E-2	8.7E-4	ND 4.3E-4	ND 4.5E-4	8.7E-4	8.8E-2
limonene		7.7E-2	ND 2.3E-2	ND 2.1E-2	ND 2.3E-2	ND 6.7E-2	7.7E-2
p-mentha-1,5-diene		ND 2.5E-2	ND 2.3E-2	ND 2.1E-2	ND 2.3E-2	ND 6.7E-2	ND 9.3E-2
methanol	(H)	3.6E-2	2.3E-3	1.4E-3	1.3E-3	5.0E-3	4.1E-2
methyl ethyl ketone (MEK)	(H)	ND 2.2E-3	ND 2.1E-3	ND 2.1E-3	ND 2.2E-3	ND 6.4E-3	ND 8.6E-3
methyl isobutyl ketone	(H)	3.1E-3	ND 2.0E-3	ND 2.0E-3	ND 2.1E-3	ND 6.2E-3	3.1E-3
methylene chloride	(H)	ND 7.9E-4	ND 7.2E-4	ND 6.5E-4	ND 7.3E-4	ND 2.1E-3	ND 2.9E-3
phenol	(H)	2.9E-3	3.8E-3	2.0E-3	2.0E-3	7.8E-3	1.1E-2
alpha-pinene		8.6E-1	ND 2.3E-2	ND 2.1E-2	ND 2.3E-2	ND 6.7E-2	8.6E-1
beta-pinene		3.4E-1	ND 2.3E-2	ND 2.1E-2	ND 2.3E-2	ND 6.7E-2	3.4E-1
propionaldehyde	(H)	ND 2.0E-3	ND 1.9E-3	ND 1.9E-3	ND 2.0E-3	ND 5.7E-3	ND 7.8E-3
styrene	(H)	1.2E-3	ND 8.8E-4	ND 8.0E-4	ND 9.0E-4	ND 2.6E-3	1.2E-3
toluene	(H)	9.2E-3	ND 7.8E-4	ND 7.1E-4	ND 7.9E-4	ND 2.3E-3	9.2E-3
1,2,4-trichlorobenzene	(H)	ND 1.7E-3	ND 1.5E-3	ND 1.4E-3	ND 1.6E-3	ND 4.5E-3	ND 6.2E-3
m,p-xylene	(H)	3.8E-3	ND 8.9E-4	ND 8.1E-4	ND 9.2E-4	ND 2.6E-3	3.8E-3
o-xylene	(H)	ND 9.9E-4	ND 8.9E-4	ND 8.1E-4	ND 9.2E-4	ND 2.6E-3	ND 3.6E-3
THC as Carbon		2.5E+0	1.2E-2	1.2E-2	1.5E-2	3.8E-2	2.5E+0
Total HAPs		2.0E-1	7.7E-3	3.3E-3	3.4E-3	1.4E-2	2.1E-1
Total Terpenes		1.3E+0	0.0E+0	0.0E+0	0.0E+0	0.0E+0	1.3E+0
Production Rate (MSF 3/8 /hr)		18.8	18.8	18.8	18.8		
Vol. Flow Rate (DSCFM)		14292	12533	12328	12126		
Source Moisture (%)		41.2	1.5	1.4	1.4		
Source Temp (°C)		134.5	24.3	29.7	36.9		

ND x.xEx = Below Detection Limit of x.xEx; H = CAA HAP; AI = Analytical Interference; ODTH = Oven Dried Tons

Table 5.8.2. No. 2 Dryer Emissions, Mill 194

Analyte		No. 2 Dryer Heated Zone Exhaust (194-2DV2) lb/MSF 3/8"	Veneer Cooling Section Vents: No. 2 (194-2DV3) lb/MSF 3/8"	Veneer Cooling Section Vents: No. 1 (194-2DV4) lb/MSF 3/8"	Total Veneer Cooling Section Emissions lb/MSF 3/8"	Total Dryer Emissions lb/MSF 3/8"
acetaldehyde	(H)	1.2E-2	ND 4.7E-3	ND 4.8E-3	ND 9.5E-3	1.2E-2
acetone	(N)	8.4E-3	1.1E-3	ND 4.8E-3	1.1E-3	9.5E-3
acrolein	(H)	2.2E-3	ND 4.2E-3	ND 4.2E-3	ND 8.4E-3	2.2E-3
benzene	(H)	ND 6.7E-4	ND 1.7E-3	ND 1.5E-3	ND 3.1E-3	ND 3.8E-3
bromomethane	(H)	ND 8.1E-4	ND 2.0E-3	ND 1.8E-3	ND 3.8E-3	ND 4.6E-3
camphene		ND 2.3E-2	ND 5.8E-2	ND 5.1E-2	ND 1.1E-1	ND 1.3E-1
3-carene		ND 2.3E-2	ND 5.8E-2	ND 5.1E-2	ND 1.1E-1	ND 1.3E-1
chloroethane	(H)	ND 5.5E-4	ND 1.4E-3	ND 1.2E-3	ND 2.6E-3	ND 3.1E-3
chloroethene	(H)	ND 5.3E-4	ND 1.3E-3	ND 1.2E-3	ND 2.5E-3	ND 3.0E-3
cumene	(H)	ND 2.1E-2	ND 5.1E-2	ND 4.5E-2	ND 9.6E-2	ND 1.2E-1
p-cymene		ND 2.3E-2	ND 5.7E-2	ND 5.1E-2	ND 1.1E-1	ND 1.3E-1
1,2-dichloroethane	(H)	ND 8.4E-4	ND 2.1E-3	ND 1.9E-3	ND 4.0E-3	ND 4.8E-3
cis-1,2-dichloroethylene		ND 8.3E-4	ND 2.1E-3	ND 1.8E-3	ND 3.9E-3	ND 4.7E-3
formaldehyde	(H)	8.3E-3	ND 1.0E-3	ND 1.1E-3	ND 2.1E-3	8.3E-3
limonene		3.0E-2	ND 5.8E-2	ND 5.1E-2	ND 1.1E-1	3.0E-2
p-mentha-1,5-diene		ND 2.3E-2	ND 5.8E-2	ND 5.1E-2	ND 1.1E-1	ND 1.3E-1
methanol	(H)	4.1E-2	1.3E-2	1.7E-2	3.1E-2	7.1E-2
methyl ethyl ketone (MEK)	(H)	ND 2.1E-3	ND 5.3E-3	ND 5.3E-3	ND 1.1E-2	ND 1.3E-2
methyl isobutyl ketone	(H)	ND 2.1E-3	ND 5.1E-3	ND 5.1E-3	ND 1.0E-2	ND 1.2E-2
methylene chloride	(H)	ND 7.2E-4	ND 1.8E-3	ND 1.6E-3	ND 3.4E-3	ND 4.1E-3
phenol	(H)	3.5E-3	ND 8.5E-3	ND 8.7E-3	ND 1.7E-2	3.5E-3
alpha-pinene		8.9E-1	ND 5.8E-2	ND 5.1E-2	ND 1.1E-1	8.9E-1
beta-pinene		3.3E-1	ND 5.8E-2	ND 5.1E-2	ND 1.1E-1	3.3E-1
propionaldehyde	(H)	ND 1.9E-3	ND 4.7E-3	ND 4.8E-3	ND 9.5E-3	ND 1.1E-2
styrene	(H)	ND 8.9E-4	ND 2.2E-3	ND 2.0E-3	ND 4.2E-3	ND 5.1E-3
toluene	(H)	ND 7.9E-4	ND 1.9E-3	ND 1.7E-3	ND 3.7E-3	ND 4.5E-3
1,2,4-trichlorobenzene	(H)	ND 1.5E-3	ND 3.8E-3	ND 3.4E-3	ND 7.3E-3	ND 8.8E-3
m,p-xylene	(H)	ND 9.1E-4	ND 2.2E-3	ND 2.0E-3	ND 4.2E-3	ND 5.2E-3
o-xylene	(H)	ND 9.1E-4	ND 2.2E-3	ND 2.0E-3	ND 4.2E-3	ND 5.2E-3
THC as Carbon		1.5E+0				1.5E+0
Total HAPs		6.6E-2	1.3E-2	1.7E-2	3.1E-2	9.7E-2
Total Terpenes		1.2E+0	0.0E+0	0.0E+0	0.0E+0	1.2E+0
Production Rate (MSF 3/8 /hr)		11.5	10.6	10.6		
Vol. Flow Rate (DSCFM)		8043	15661	15048		
Source Moisture (%)		32.5	1.2	1.2		
Source Temp (°C)		163.0	29.3	34.1		

ND x.xEx = Below Detection Limit of x.xEx; H = CAA HAP; AI = Analytical Interference; ODTH = Oven Dried Tons

Table 5.8.3. RCO Emissions, Mill 194			
Analyte		RCO Inlet Combined Dryers (194-XDV2) lb/MSF 3/8"	RCO Outlet (194-XDV1) lb/MSF 3/8"
acetaldehyde	(H)	8.5E-2	6.1E-2
acetone	(N)	5.7E-2	4.8E-2
acrolein	(H)	6.4E-3	ND 2.6E-3
benzene	(H)	3.6E-3	ND 1.1E-3
bromomethane	(H)	ND 1.0E-3	ND 1.3E-3
camphene		ND 2.9E-2	ND 3.7E-2
3-carene		ND 2.9E-2	ND 3.7E-2
chloroethane	(H)	ND 7.0E-4	ND 8.8E-4
chloroethene	(H)	ND 6.7E-4	ND 8.5E-4
cumene	(H)	ND 2.6E-2	ND 3.3E-2
p-cymene		ND 2.9E-2	ND 3.7E-2
1,2-dichloroethane	(H)	ND 1.1E-3	ND 1.3E-3
cis-1,2-dichloroethylene		ND 1.0E-3	ND 1.3E-3
formaldehyde	(H)	7.8E-2	3.8E-2
limonene		8.5E-2	ND 3.7E-2
p-mentha-1,5-diene		ND 2.9E-2	ND 3.7E-2
methanol	(H)	3.6E-2	4.9E-3
methyl ethyl ketone (MEK)	(H)	2.4E-3	ND 3.3E-3
methyl isobutyl ketone	(H)	1.0E-3	ND 3.2E-3
methylene chloride	(H)	ND 9.2E-4	ND 1.2E-3
phenol	(H)	7.8E-3	5.5E-3
alpha-pinene		1.2E+0	ND 3.7E-2
beta-pinene		4.8E-1	ND 3.7E-2
propionaldehyde	(H)	1.8E-3	ND 3.0E-3
styrene	(H)	1.9E-3	ND 1.4E-3
toluene	(H)	5.7E-3	ND 1.3E-3
1,2,4-trichlorobenzene	(H)	ND 2.0E-3	ND 2.5E-3
m,p-xylene	(H)	4.0E-3	ND 1.4E-3
o-xylene	(H)	ND 1.1E-3	ND 1.4E-3
THC as Carbon		2.8E+0	3.0E-1
Total HAPs		2.3E-1	1.1E-1
Total Terpenes		1.8E+0	0.0E+0
Production Rate (MSF 3/8 /hr)		26.9	26.9
Vol. Flow Rate (DSCFM)		21714	28056
Source Moisture (%)		35.3	32.2
Source Temp (°C)		150.8	186.9

ND x.xEx = Below Detection Limit of x.xEx; H = CAA HAP; AI = Analytical Interference; ODTH = Oven Dried Tons per Hour; N = Not a HAP or VOC as defined by US EPA; MSF = 1000 square feet

Table 5.8.4. No. 1 and No. 2 Press Emissions, Mill 194			
Analyte		Unpowered Vent Above No. 1 Press (194-1PB1) lb/MSF 3/8"	Powered Vent Above No. 2 Press (194-2PB1) lb/MSF 3/8"
acetaldehyde	(H)	6.1E-4	4.4E-3
acetone	(N)	2.2E-3	8.3E-3
acrolein	(H)	ND 7.5E-4	ND 3.9E-3
benzene	(H)	ND 3.3E-4	ND 1.6E-3
bromomethane	(H)	ND 4.0E-4	ND 1.9E-3
camphene		ND 1.2E-2	ND 5.4E-2
3-carene		ND 1.2E-2	ND 5.4E-2
chloroethane	(H)	ND 2.7E-4	ND 1.3E-3
chloroethene	(H)	ND 2.7E-4	ND 1.2E-3
cumene	(H)	ND 1.0E-2	ND 4.8E-2
p-cymene		ND 1.1E-2	ND 5.3E-2
1,2-dichloroethane	(H)	ND 4.2E-4	ND 2.0E-3
cis-1,2-dichloroethylene		ND 4.1E-4	ND 1.9E-3
formaldehyde	(H)	ND 1.8E-4	5.4E-3
limonene		ND 1.2E-2	ND 5.4E-2
p-mentha-1,5-diene		ND 1.2E-2	ND 5.4E-2
methanol	(H)	6.0E-2	2.5E-1
methyl ethyl ketone (MEK)	(H)	ND 9.5E-4	ND 4.9E-3
methyl isobutyl ketone	(H)	4.3E-4	ND 4.8E-3
methylene chloride	(H)	ND 3.6E-4	ND 1.7E-3
phenol	(H)	ND 1.5E-3	ND 7.9E-3
alpha-pinene		5.0E-2	1.8E-1
beta-pinene		1.8E-2	6.5E-2
propionaldehyde	(H)	ND 8.5E-4	ND 4.4E-3
styrene	(H)	ND 4.4E-4	ND 2.1E-3
toluene	(H)	ND 3.9E-4	ND 1.8E-3
1,2,4-trichlorobenzene	(H)	ND 7.7E-4	ND 3.6E-3
m,p-xylene	(H)	ND 4.5E-4	ND 2.1E-3
o-xylene	(H)	ND 4.5E-4	ND 2.1E-3
THC as Carbon		1.1E-1	3.7E-1
Total HAPs		6.2E-2	2.5E-1
Total Terpenes		6.8E-2	2.4E-1
Production Rate (MSF 3/8 /hr)		14.4	13.7
Vol. Flow Rate (DSCFM)		3835	22182
Source Moisture (%)		2.7	2.2
Source Temp (°C)		32.6	28.7

ND x.xEx = Below Detection Limit of x.xEx; H = CAA HAP; AI = Analytical Interference; ODTH = Oven Dried Tons per Hour; N = Not a HAP or VOC as defined by US EPA; MSF = 1000 square feet

Table 5.8.5. Alkane Analysis Emission Test Results, Mill 194					
Source	Run No.	Methane		Ethane	
		ppmV*	lb/MSF 3/8"	ppmV*	lb/MSF 3/8"
1DV2	1	122	0.238	4.7	0.009
1DV2	2	127	0.232	5.3	0.010
1DV2	3	137	0.253	4.4	0.008
2DV2	1	3.4	0.005	ND <1.5	ND <0.003
XDV1	2	37.1	0.098	ND <1.7	ND <0.009
XDV1	3	38.4	0.099	ND <1.8	ND <0.009
XDV1	4	36.8	0.095	ND <1.7	ND <0.009
XDV2	2	40.4	0.086	2.0	0.008
XDV2	3	38.9	0.075	1.9	0.008
XDV2	4	38.4	0.076	1.8	0.007

Propane, Butane, Pentane, and Hexane were not detected. The detection limit for this analysis was 1.5 ppmV

*as received, ~1% moisture

Table 5.8.6. Carbon Monoxide Emission Test Results, Mill 194

Source	Run Number 1			Run Number 2			Run Number 3		
	ppm	lb/hr	lb/MSF 3/8"	ppm	lb/hr	lb/MSF 3/8"	ppm	lb/hr	lb/MSF 3/8"
1DV2	258	16.0	0.89	337	20.8	1.08	310	19.5	1.02
1DV3	1.6	0.08	0.005	3.3	0.14	0.01	ND (0.51)	ND (0.03)	ND (0.003)
1DV4	1.4	0.07	0.004	ND (0.51)	ND (0.02)	ND (0.001)	ND (0.51)	ND (0.03)	ND (0.002)
1DV5	ND (0.51)	ND (0.02)	ND (0.001)	ND (0.51)	ND (0.02)	ND (0.001)	ND (0.51)	ND (0.03)	ND (0.002)
2DV2	4.5	0.12	0.011	11	0.39	0.04	7.9	0.29	0.02
2DV3	ND (0.51)	ND (0.03)	ND (0.003)	ND (0.51)	ND (0.03)	ND (0.002)	11	0.86	0.11
2DV4	6.4	0.41	0.03	7.6	0.45	0.04	ND (0.51)	ND (0.04)	ND (0.005)
	Run Number 2			Run Number 3			Run Number 4		
XDV1	1.7	0.20	0.008	1.7	0.20	0.008	3.3	0.41	0.015
XDV2	102	10.1	0.38	93	8.3	0.31	95	9.0	0.33

ND, x.xx = Non-Detect, Detection Limit

5.9 Results of Tests at Mill 400

At Mill 400, tests to measure volatile organic HAP and VOC emissions were conducted on the no. 3 hardwood veneer dryer with white oak and cherry furnishes, and on the no. 4 hardwood veneer dryer with red oak furnish. The results of these tests are contained in Tables 5.9.1 through 5.9.3, respectively. For each set of dryer/furnish conditions a total dryer emission rate was obtained by adding the veneer cooling section emissions to the sum of the emissions from the heated zones of the dryers. In addition to the individual compound results, total HAP and total VOC values are presented in Tables 5.9.1 through 5.9.3. Source physical parameters (volumetric flow rate, moisture content and dry bulb temperature) and unit production rates are also given for each source. Detailed information on process operating conditions during the tests is included in Section 4.9.

Table 5.9.1. No. 3 Dryer Emissions (White Oak Furnish), Mill 400

Analyte		Dry End Vent (400-3DV2) lb/MSF	Green End Vent (400-3DV3) lb/MSF	Total Heated Zone Emissions lb/MSF	Cooling Section Vent (400-3DV1) lb/MSF	Total Dryer Emissions lb/MSF
acetaldehyde	(H)	6.8E-5	1.3E-4	2.0E-4	2.3E-3	2.5E-3
acetone	(N)	4.3E-5	2.5E-5	6.9E-5	2.8E-3	2.8E-3
acrolein	(H)	ND 4.5E-5	ND 6.3E-5	ND 1.1E-4	ND 2.3E-3	ND 2.4E-3
benzene	(H)	ND 2.4E-5	ND 3.3E-5	ND 5.8E-5	ND 1.1E-3	ND 1.2E-3
bromomethane	(H)	ND 3.0E-5	ND 4.1E-5	ND 7.0E-5	ND 1.3E-3	ND 1.4E-3
camphene		ND 8.5E-4	ND 1.2E-3	ND 2.0E-3	ND 3.8E-2	ND 4.0E-2
3-carene		ND 8.5E-4	ND 1.2E-3	ND 2.0E-3	ND 3.8E-2	ND 4.0E-2
chloroethane	(H)	ND 2.0E-5	ND 2.8E-5	ND 4.8E-5	ND 9.1E-4	ND 9.5E-4
chloroethene	(H)	ND 2.0E-5	ND 2.7E-5	ND 4.6E-5	ND 8.8E-4	ND 9.2E-4
cumene	(H)	ND 7.5E-4	ND 1.0E-3	ND 1.8E-3	ND 3.4E-2	ND 3.6E-2
p-cymene		ND 8.4E-4	ND 1.2E-3	ND 2.0E-3	ND 3.8E-2	ND 4.0E-2
1,2-dichloroethane	(H)	ND 3.1E-5	ND 4.2E-5	ND 7.3E-5	ND 1.4E-3	ND 1.5E-3
cis-1,2-dichloroethylene		ND 3.0E-5	ND 4.2E-5	ND 7.2E-5	ND 1.4E-3	ND 1.4E-3
formaldehyde	(H)	3.4E-5	2.9E-5	6.3E-5	ND 6.1E-4	6.3E-5
limonene		ND 8.5E-4	ND 1.2E-3	ND 2.0E-3	ND 3.8E-2	ND 4.0E-2
p-mentha-1,5-diene		ND 8.5E-4	ND 1.2E-3	ND 2.0E-3	ND 3.8E-2	ND 4.0E-2
methanol	(H)	3.0E-4	1.1E-3	1.4E-3	8.0E-4	2.2E-3
methyl ethyl ketone (MEK)	(H)	ND 5.7E-5	ND 8.0E-5	ND 1.4E-4	ND 2.8E-3	ND 3.0E-3
methyl isobutyl ketone	(H)	ND 5.9E-5	ND 8.2E-5	ND 1.4E-4	ND 2.9E-3	ND 3.0E-3
methylene chloride	(H)	ND 2.7E-5	ND 3.6E-5	ND 6.3E-5	ND 1.2E-3	ND 1.3E-3
phenol	(H)	ND 8.8E-5	ND 1.3E-4	ND 2.1E-4	ND 4.5E-3	ND 4.7E-3
alpha-pinene		ND 8.5E-4	ND 1.2E-3	ND 2.0E-3	ND 3.8E-2	ND 4.0E-2
beta-pinene		ND 8.5E-4	ND 1.2E-3	ND 2.0E-3	ND 3.8E-2	ND 4.0E-2
propionaldehyde	(H)	ND 5.0E-5	ND 7.1E-5	ND 1.2E-4	ND 2.5E-3	ND 2.7E-3
styrene	(H)	ND 3.3E-5	ND 4.5E-5	ND 7.7E-5	ND 1.5E-3	ND 1.5E-3
toluene	(H)	ND 2.9E-5	ND 4.0E-5	ND 6.8E-5	ND 1.3E-3	ND 1.4E-3
1,2,4-trichlorobenzene	(H)	ND 5.7E-5	ND 7.8E-5	ND 1.3E-4	ND 2.5E-3	ND 2.7E-3
m,p-xylene	(H)	ND 3.3E-5	ND 4.6E-5	ND 7.9E-5	ND 1.5E-3	ND 1.6E-3
o-xylene	(H)	ND 3.3E-5	ND 4.6E-5	ND 7.9E-5	ND 1.5E-3	ND 1.6E-3
THC as Carbon		2.8E-3	6.3E-3	9.1E-3	8.7E-2	9.6E-2
Total HAPs		4.0E-4	1.3E-3	1.7E-3	3.1E-3	4.7E-3
Total Terpenes		0.0E+0	0.0E+0	0.0E+0	0.0E+0	0.0E+0
Production Rate (MSF/hr)		19.5	19.5		19.5	
Vol. Flow Rate (DSCFM)		365	523		17833	
Source Moisture (%)		8.4	5.8		1.6	
Source Temp (°C)		111.4	122.6		20.9	

ND x.xEx = Below Detection Limit of x.xEx; H = CAA HAP; AI = Analytical Interference; ODTH = Oven Dried Tons per Hour; N = Not a HAP or VOC as defined by US EPA; MSF = 1000 square feet

Table 5.9.2. No. 3 Dryer Emissions (Cherry Furnish), Mill 400

Analyte		Dry End Vent (400-3DV2) lb/MSF	Green End Vent (400-3DV3) lb/MSF	Total Heated Zone Emissions lb/MSF	Cooling Section Vent (400-3DV1) lb/MSF	Total Dryer Emissions lb/MSF
acetaldehyde	(H)	6.0E-5	9.2E-5	1.5E-4	5.5E-4	7.1E-4
acetone	(N)	3.9E-5	3.5E-5	7.4E-5	1.9E-3	1.9E-3
acrolein	(H)	ND 3.2E-5	ND 4.2E-5	ND 7.4E-5	ND 1.4E-3	ND 1.5E-3
benzene	(H)	ND 1.3E-5	ND 1.8E-5	ND 3.2E-5	ND 5.7E-4	ND 6.0E-4
bromomethane	(H)	ND 1.6E-5	ND 2.2E-5	ND 3.8E-5	ND 7.0E-4	ND 7.3E-4
camphene		ND 4.6E-4	ND 6.4E-4	ND 1.1E-3	ND 2.0E-2	ND 2.1E-2
3-carene		ND 4.6E-4	ND 6.4E-4	ND 1.1E-3	ND 2.0E-2	ND 2.1E-2
chloroethane	(H)	ND 1.1E-5	ND 1.5E-5	ND 2.6E-5	ND 4.7E-4	ND 5.0E-4
chloroethene	(H)	ND 1.0E-5	ND 1.5E-5	ND 2.5E-5	ND 4.6E-4	ND 4.8E-4
cumene	(H)	ND 4.0E-4	ND 5.7E-4	ND 9.7E-4	ND 1.8E-2	ND 1.9E-2
p-cymene		ND 4.5E-4	ND 6.4E-4	ND 1.1E-3	ND 2.0E-2	ND 2.1E-2
1,2-dichloroethane	(H)	ND 1.7E-5	ND 2.3E-5	ND 4.0E-5	ND 7.3E-4	ND 7.7E-4
cis-1,2-dichloroethylene		ND 1.6E-5	ND 2.3E-5	ND 3.9E-5	ND 7.1E-4	ND 7.5E-4
formaldehyde	(H)	6.7E-6	1.8E-5	2.5E-5	2.6E-4	2.8E-4
limonene		ND 4.6E-4	ND 6.4E-4	ND 1.1E-3	ND 2.0E-2	ND 2.1E-2
p-mentha-1,5-diene		ND 4.6E-4	ND 6.4E-4	ND 1.1E-3	ND 2.0E-2	ND 2.1E-2
methanol	(H)	1.2E-4	5.3E-4	6.5E-4	ND 1.5E-3	6.5E-4
methyl ethyl ketone (MEK)	(H)	ND 4.0E-5	ND 5.3E-5	ND 9.3E-5	ND 1.8E-3	ND 1.9E-3
methyl isobutyl ketone	(H)	ND 3.9E-5	ND 5.2E-5	ND 9.1E-5	ND 1.8E-3	ND 1.8E-3
methylene chloride	(H)	ND 1.4E-5	ND 2.0E-5	ND 3.4E-5	ND 6.2E-4	ND 6.6E-4
phenol	(H)	ND 6.5E-5	ND 8.4E-5	ND 1.5E-4	ND 2.9E-3	ND 3.0E-3
alpha-pinene		ND 4.6E-4	ND 6.4E-4	ND 1.1E-3	ND 2.0E-2	ND 2.1E-2
beta-pinene		ND 4.6E-4	ND 6.4E-4	ND 1.1E-3	ND 2.0E-2	ND 2.1E-2
propionaldehyde	(H)	ND 3.6E-5	ND 4.7E-5	ND 8.3E-5	ND 1.6E-3	ND 1.7E-3
styrene	(H)	ND 1.7E-5	ND 2.5E-5	ND 4.2E-5	ND 7.6E-4	ND 8.1E-4
toluene	(H)	ND 1.5E-5	ND 2.2E-5	ND 3.7E-5	ND 6.8E-4	ND 7.1E-4
1,2,4-trichlorobenzene	(H)	ND 3.0E-5	ND 4.3E-5	ND 7.3E-5	ND 1.3E-3	ND 1.4E-3
m,p-xylene	(H)	ND 1.8E-5	ND 2.5E-5	ND 4.3E-5	ND 7.8E-4	ND 8.2E-4
o-xylene	(H)	ND 1.8E-5	ND 2.5E-5	ND 4.3E-5	ND 7.8E-4	ND 8.2E-4
THC as Carbon		9.2E-4	2.5E-3	3.4E-3	7.5E-2	7.9E-2
Total HAPs		1.9E-4	6.4E-4	8.3E-4	8.1E-4	1.6E-3
Total Terpenes		0.0E+0	0.0E+0	0.0E+0	0.0E+0	0.0E+0
Production Rate (MSF/hr)		27.8	27.8		27.8	
Vol. Flow Rate (DSCFM)		374	543		16800	
Source Moisture (%)		9.1	8.1		1.7	
Source Temp (°C)		113.3	119.3		24.6	

ND x.xEx = Below Detection Limit of x.xEx; H = CAA HAP; AI = Analytical Interference; ODTH = Oven Dried Tons per Hour; N = Not a HAP or VOC as defined by US EPA; MSF = 1000 square feet

Table 5.9.3. No. 4 Dryer Emissions (Red Oak Furnish), Mill 400

Analyte		Dry End Vent (400-4DV2) lb/MSF	Green End Vent (400-4DV3) lb/MSF	Total Heated Zone Emissions lb/MSF	Cooling Section Vent (400-4DV1) lb/MSF	Total Dryer Emissions lb/MSF
acetaldehyde	(H)	4.2E-6	2.6E-4	2.6E-4	7.1E-4	9.7E-4
acetone	(N)	1.0E-5	2.1E-4	2.2E-4	1.3E-3	1.5E-3
acrolein	(H)	ND 7.3E-6	ND 1.6E-4	ND 1.7E-4	ND 1.4E-3	ND 1.6E-3
benzene	(H)	ND 3.1E-6	ND 6.5E-5	ND 6.8E-5	ND 5.9E-4	ND 6.6E-4
bromomethane	(H)	ND 3.8E-6	ND 7.9E-5	ND 8.3E-5	ND 7.1E-4	ND 8.0E-4
camphene		ND 1.1E-4	ND 2.3E-3	ND 2.4E-3	ND 2.0E-2	ND 2.3E-2
3-carene		ND 1.1E-4	ND 2.3E-3	ND 2.4E-3	ND 2.0E-2	ND 2.3E-2
chloroethane	(H)	ND 2.6E-6	ND 5.4E-5	ND 5.6E-5	ND 4.8E-4	ND 5.4E-4
chloroethene	(H)	ND 2.5E-6	ND 5.2E-5	ND 5.5E-5	ND 4.7E-4	ND 5.2E-4
cumene	(H)	ND 9.6E-5	ND 2.0E-3	ND 2.1E-3	ND 1.8E-2	ND 2.0E-2
p-cymene		ND 1.1E-4	ND 2.2E-3	ND 2.3E-3	ND 2.0E-2	ND 2.3E-2
1,2-dichloroethane	(H)	ND 4.0E-6	ND 8.3E-5	ND 8.7E-5	ND 7.4E-4	ND 8.3E-4
cis-1,2-dichloroethylene		ND 3.9E-6	ND 8.1E-5	ND 8.5E-5	ND 7.3E-4	ND 8.1E-4
formaldehyde	(H)	6.3E-6	7.0E-5	7.7E-5	ND 4.1E-4	7.7E-5
limonene		ND 1.1E-4	ND 2.3E-3	ND 2.4E-3	ND 2.0E-2	ND 2.3E-2
p-mentha-1,5-diene		ND 1.1E-4	ND 2.3E-3	ND 2.4E-3	ND 2.0E-2	ND 2.3E-2
methanol	(H)	8.3E-5	3.0E-3	3.0E-3	ND 1.5E-3	3.0E-3
methyl ethyl ketone (MEK)	(H)	ND 9.2E-6	ND 2.1E-4	ND 2.2E-4	ND 1.8E-3	ND 2.0E-3
methyl isobutyl ketone	(H)	ND 9.1E-6	ND 2.0E-4	ND 2.1E-4	6.6E-4	6.6E-4
methylene chloride	(H)	ND 3.4E-6	ND 7.1E-5	ND 7.4E-5	ND 6.4E-4	ND 7.1E-4
phenol	(H)	ND 1.5E-5	ND 3.3E-4	ND 3.5E-4	ND 2.8E-3	ND 3.2E-3
alpha-pinene		ND 1.1E-4	ND 2.3E-3	ND 2.4E-3	ND 2.0E-2	ND 2.3E-2
beta-pinene		ND 1.1E-4	ND 2.3E-3	ND 2.4E-3	ND 2.0E-2	ND 2.3E-2
propionaldehyde	(H)	ND 8.2E-6	ND 1.9E-4	ND 1.9E-4	ND 1.6E-3	ND 1.8E-3
styrene	(H)	ND 4.2E-6	ND 8.7E-5	ND 9.1E-5	ND 7.8E-4	ND 8.7E-4
toluene	(H)	ND 3.7E-6	ND 7.7E-5	ND 8.1E-5	ND 6.9E-4	ND 7.7E-4
1,2,4-trichlorobenzene	(H)	ND 7.2E-6	ND 1.5E-4	ND 1.6E-4	ND 1.4E-3	ND 1.5E-3
m,p-xylene	(H)	ND 4.2E-6	ND 8.9E-5	ND 9.3E-5	ND 8.0E-4	ND 8.9E-4
o-xylene	(H)	ND 4.2E-6	ND 8.9E-5	ND 9.3E-5	ND 8.0E-4	ND 8.9E-4
THC as Carbon		8.2E-4	1.9E-2	2.0E-2	8.8E-3	2.9E-2
Total HAPs		9.4E-5	3.3E-3	3.4E-3	1.4E-3	4.8E-3
Total Terpenes		0.0E+0	0.0E+0	0.0E+0	0.0E+0	0.0E+0
Production Rate (MSF/hr)		17.7	17.7		17.7	
Vol. Flow Rate (DSCFM)		54	1187		11000	
Source Moisture (%)		11.8	11.5		1.8	
Source Temp (°C)		112.7	141.0		31.6	

ND x.xEx = Below Detection Limit of x.xEx; H = CAA HAP; AI = Analytical Interference; ODTH = Oven Dried Tons per Hour; N = Not a HAP or VOC as defined by US EPA; MSF = 1000 square feet

5.10 Results of Tests at Mill 401

At Mill 401, tests to measure volatile organic HAP and VOC emissions were conducted on the no. 1 hardwood veneer dryer with red oak and white oak furnishes, and on the no. 2 hardwood veneer dryer with maple and oak furnishes. The results of these tests are contained in Tables 5.10.1 through 5.10.4, respectively. For each set of dryer/furnish conditions a total dryer emission rate was obtained by adding the veneer cooling section emissions to the sum of the emissions from the heated zones of the dryers. In addition to the individual compound results, total HAP and total VOC values are presented in Tables 5.10.1 through 5.10.4. Source physical parameters (volumetric flow rate, moisture content and dry bulb temperature) and unit production rates are also given for each source. Detailed information on process operating conditions during the tests is included in Section 4.10.

Table 5.10.1. No. 1 Dryer Emissions (Red Oak Furnish) , Mill 401

Analyte		Dry End Vent (401-1DV2) lb/MSF	Green End Vent (401-1DV3) lb/MSF	Total Heated Zone Emissions lb/MSF	Cooling Section Vent (401-1DV1) lb/MSF	Total Dryer Emissions lb/MSF
acetaldehyde	(H)	3.2E-4	3.0E-4	6.2E-4	3.8E-3	4.4E-3
acetone	(N)	1.9E-4	1.6E-4	3.6E-4	4.3E-3	4.7E-3
acrolein	(H)	ND 1.5E-4	ND 1.3E-4	ND 2.9E-4	ND 3.0E-3	ND 3.3E-3
benzene	(H)	ND 6.6E-5	ND 6.0E-5	ND 1.3E-4	ND 1.2E-3	ND 1.4E-3
bromomethane	(H)	ND 8.0E-5	ND 7.2E-5	ND 1.5E-4	ND 1.5E-3	ND 1.7E-3
camphene		ND 2.3E-3	ND 2.1E-3	ND 4.4E-3	ND 4.3E-2	ND 4.7E-2
3-carene		ND 2.3E-3	ND 2.1E-3	ND 4.4E-3	ND 4.3E-2	ND 4.7E-2
chloroethane	(H)	ND 5.5E-5	ND 4.9E-5	ND 1.0E-4	ND 1.0E-3	ND 1.1E-3
chloroethene	(H)	ND 5.3E-5	ND 4.8E-5	ND 1.0E-4	ND 9.9E-4	ND 1.1E-3
cumene	(H)	ND 2.0E-3	ND 1.8E-3	ND 3.9E-3	ND 3.8E-2	ND 4.2E-2
p-cymene		ND 2.3E-3	ND 2.0E-3	ND 4.3E-3	ND 4.2E-2	ND 4.7E-2
1,2-dichloroethane	(H)	ND 8.4E-5	ND 7.5E-5	ND 1.6E-4	ND 1.6E-3	ND 1.7E-3
cis-1,2-dichloroethylene		ND 8.2E-5	ND 7.4E-5	ND 1.6E-4	ND 1.5E-3	ND 1.7E-3
formaldehyde	(H)	9.3E-6	2.1E-5	3.0E-5	6.2E-4	6.5E-4
limonene		ND 2.3E-3	ND 2.1E-3	ND 4.4E-3	ND 4.3E-2	ND 4.7E-2
p-mentha-1,5-diene		ND 2.3E-3	ND 2.1E-3	ND 4.4E-3	ND 4.3E-2	ND 4.7E-2
methanol	(H)	2.0E-3	2.4E-3	4.4E-3	1.3E-3	5.7E-3
methyl ethyl ketone (MEK)	(H)	ND 2.0E-4	ND 1.7E-4	ND 3.6E-4	ND 3.8E-3	ND 4.1E-3
methyl isobutyl ketone	(H)	ND 1.9E-4	ND 1.7E-4	ND 3.6E-4	2.8E-3	2.8E-3
methylene chloride	(H)	ND 7.2E-5	ND 6.5E-5	ND 1.4E-4	ND 1.3E-3	ND 1.5E-3
phenol	(H)	ND 3.1E-4	8.3E-5	8.3E-5	ND 6.1E-3	8.3E-5
alpha-pinene		ND 2.3E-3	ND 2.1E-3	ND 4.4E-3	ND 4.3E-2	ND 4.7E-2
beta-pinene		ND 2.3E-3	ND 2.1E-3	ND 4.4E-3	ND 4.3E-2	ND 4.7E-2
propionaldehyde	(H)	ND 1.7E-4	ND 1.5E-4	ND 3.3E-4	ND 3.4E-3	ND 3.7E-3
styrene	(H)	ND 8.8E-5	ND 7.9E-5	ND 1.7E-4	ND 1.6E-3	ND 1.8E-3
toluene	(H)	ND 7.8E-5	ND 7.0E-5	ND 1.5E-4	ND 1.5E-3	ND 1.6E-3
1,2,4-trichlorobenzene	(H)	ND 1.5E-4	ND 1.4E-4	ND 2.9E-4	ND 2.9E-3	ND 3.2E-3
m,p-xylene	(H)	ND 9.0E-5	ND 8.1E-5	ND 1.7E-4	ND 1.7E-3	ND 1.9E-3
o-xylene	(H)	ND 9.0E-5	ND 8.1E-5	ND 1.7E-4	ND 1.7E-3	ND 1.9E-3
THC as Carbon		1.8E-2	1.9E-2	3.7E-2		
Total HAPs		2.3E-3	2.8E-3	5.1E-3	8.6E-3	1.4E-2
Total Terpenes		0.0E+0	0.0E+0	0.0E+0	0.0E+0	0.0E+0
Production Rate (MSF/hr)		17.2	17.2		17.2	
Vol. Flow Rate (DSCFM)		923	855		18733	
Source Moisture (%)		8.0	15.9		2.0	
Source Temp (°C)		113.9	96.2		34.5	

ND x.xEx = Below Detection Limit of x.xEx; H = CAA HAP; AI = Analytical Interference; ODTH = Oven Dried Tons per Hour; N = Not a HAP or VOC as defined by US EPA; MSF = 1000 square feet

Table 5.10.2. No. 1 Dryer Emissions (White Oak furnish), Mill 401

Analyte		Green End Vent (401-1DV3) lb/MSF	Dry End Vent (401-1DV2) lb/MSF	Total Heated Zone Emissions lb/MSF	Cooling Section Vent (401-1DV1) lb/MSF	Total Dryer Emissions lb/MSF
acetaldehyde	(H)	1.5E-4	2.8E-4	4.3E-4	1.0E-3	1.5E-3
acetone	(N)	2.5E-4	1.4E-4	3.9E-4	4.2E-3	4.6E-3
acrolein	(H)	ND 1.2E-4	ND 1.1E-4	ND 2.3E-4	ND 2.7E-3	ND 3.0E-3
benzene	(H)	ND 5.1E-5	ND 4.4E-5	ND 9.4E-5	ND 1.1E-3	ND 1.2E-3
bromomethane	(H)	ND 6.1E-5	ND 5.3E-5	ND 1.1E-4	ND 1.4E-3	ND 1.5E-3
camphene		ND 1.8E-3	ND 1.5E-3	ND 3.3E-3	ND 3.9E-2	ND 4.2E-2
3-carene		ND 1.8E-3	ND 1.5E-3	ND 3.3E-3	ND 3.9E-2	ND 4.2E-2
chloroethane	(H)	ND 4.2E-5	ND 3.6E-5	ND 7.8E-5	ND 9.2E-4	ND 1.0E-3
chloroethene	(H)	ND 4.0E-5	ND 3.5E-5	ND 7.5E-5	ND 8.9E-4	ND 9.6E-4
cumene	(H)	ND 1.6E-3	ND 1.3E-3	ND 2.9E-3	ND 3.4E-2	ND 3.7E-2
p-cymene		ND 1.7E-3	ND 1.5E-3	ND 3.2E-3	ND 3.8E-2	ND 4.1E-2
1,2-dichloroethane	(H)	ND 6.4E-5	ND 5.5E-5	ND 1.2E-4	ND 1.4E-3	ND 1.5E-3
cis-1,2-dichloroethylene		ND 6.3E-5	ND 5.4E-5	ND 1.2E-4	ND 1.4E-3	ND 1.5E-3
formaldehyde	(H)	5.9E-5	7.2E-5	1.3E-4	ND 8.0E-4	1.3E-4
limonene		ND 1.8E-3	ND 1.5E-3	ND 3.3E-3	ND 3.9E-2	ND 4.2E-2
p-mentha-1,5-diene		ND 1.8E-3	ND 1.5E-3	ND 3.3E-3	ND 3.9E-2	ND 4.2E-2
methanol	(H)	3.0E-3	2.6E-3	5.6E-3	ND 2.9E-3	5.6E-3
methyl ethyl ketone (MEK)	(H)	ND 1.5E-4	ND 1.4E-4	ND 2.9E-4	ND 3.4E-3	ND 3.7E-3
methyl isobutyl ketone	(H)	ND 1.5E-4	ND 1.4E-4	ND 2.8E-4	1.6E-3	ND 1.9E-3
methylene chloride	(H)	ND 5.5E-5	ND 4.7E-5	ND 1.0E-4	ND 1.2E-3	ND 1.3E-3
phenol	(H)	8.5E-5	ND 2.3E-4	8.5E-5	ND 5.5E-3	8.5E-5
alpha-pinene		ND 1.8E-3	ND 1.5E-3	ND 3.3E-3	ND 3.9E-2	ND 4.2E-2
beta-pinene		ND 1.8E-3	ND 1.5E-3	ND 3.3E-3	ND 3.9E-2	ND 4.2E-2
propionaldehyde	(H)	ND 1.3E-4	ND 1.3E-4	ND 2.6E-4	ND 3.1E-3	ND 3.3E-3
styrene	(H)	ND 6.7E-5	ND 5.8E-5	ND 1.3E-4	ND 1.5E-3	ND 1.6E-3
toluene	(H)	ND 6.0E-5	ND 5.1E-5	ND 1.1E-4	ND 1.3E-3	ND 1.4E-3
1,2,4-trichlorobenzene	(H)	ND 1.2E-4	ND 1.0E-4	ND 2.2E-4	ND 2.6E-3	ND 2.8E-3
m,p-xylene	(H)	ND 6.9E-5	ND 5.9E-5	ND 1.3E-4	ND 1.5E-3	ND 1.6E-3
o-xylene	(H)	ND 6.9E-5	ND 5.9E-5	ND 1.3E-4	ND 1.5E-3	ND 1.6E-3
THC as Carbon		1.2E-2	1.1E-2	2.3E-2		
Total HAPs		3.3E-3	3.0E-3	6.3E-3	2.6E-3	8.9E-3
Total Terpenes		0.0E+0	0.0E+0	0.0E+0	0.0E+0	0.0E+0
Production Rate (MSF/hr)		17.7	17.7		17.7	
Vol. Flow Rate (DSCFM)		846	808		18733	
Source Moisture (%)		13.4	14.6		1.9	
Source Temp (°C)		88.2	103.3		31.6	

ND x.xEx = Below Detection Limit of x.xEx; H = CAA HAP; AI = Analytical Interference; ODTH = Oven Dried Tons per Hour; N = Not a HAP or VOC as defined by US EPA; MSF = 1000 square feet

Table 5.10.3. No. 2 Dryer Emissions (Maple Furnish), Mill 401							
Analyte		Green End Vent (401-2DV3) lb/MSF		Cooling Section Vent (401-2DV1) lb/MSF		Total Dryer Emissions lb/MSF	
acetaldehyde	(H)		1.0E-4		1.1E-3		1.2E-3
acetone	(N)		3.2E-4		3.9E-3		4.2E-3
acrolein	(H)	ND	2.1E-4	ND	2.1E-3	ND	2.3E-3
benzene	(H)	ND	8.8E-5	ND	1.0E-3	ND	1.1E-3
bromomethane	(H)	ND	1.1E-4	ND	1.2E-3	ND	1.3E-3
camphene		ND	3.1E-3	ND	3.5E-2	ND	3.9E-2
3-carene		ND	3.1E-3	ND	3.5E-2	ND	3.9E-2
chloroethane	(H)	ND	7.3E-5	ND	8.4E-4	ND	9.1E-4
chloroethene	(H)	ND	7.0E-5	ND	8.1E-4	ND	8.8E-4
cumene	(H)	ND	2.7E-3	ND	3.1E-2	ND	3.4E-2
p-cymene		ND	3.0E-3	ND	3.5E-2	ND	3.8E-2
1,2-dichloroethane	(H)	ND	1.1E-4	ND	1.3E-3	ND	1.4E-3
cis-1,2-dichloroethylene		ND	1.1E-4	ND	1.3E-3	ND	1.4E-3
formaldehyde	(H)		1.2E-4	ND	5.9E-4		1.2E-4
limonene		ND	3.1E-3	ND	3.5E-2	ND	3.9E-2
p-mentha-1,5-diene		ND	3.1E-3	ND	3.5E-2	ND	3.9E-2
methanol	(H)		3.5E-3	ND	2.2E-3		3.5E-3
methyl ethyl ketone (MEK)	(H)	ND	2.7E-4	ND	2.7E-3	ND	3.0E-3
methyl isobutyl ketone	(H)	ND	2.6E-4	ND	2.7E-3	ND	3.0E-3
methylene chloride	(H)	ND	9.6E-5	ND	1.1E-3	ND	1.2E-3
phenol	(H)	ND	4.3E-4	ND	4.3E-3	ND	4.7E-3
alpha-pinene		ND	3.1E-3	ND	3.5E-2	ND	3.9E-2
beta-pinene		ND	3.1E-3	ND	3.5E-2	ND	3.9E-2
propionaldehyde	(H)	ND	6.5E-5	ND	2.4E-3	ND	2.5E-3
styrene	(H)	ND	1.2E-4	ND	1.4E-3	ND	1.5E-3
toluene	(H)	ND	1.0E-4	ND	1.2E-3	ND	1.3E-3
1,2,4-trichlorobenzene	(H)	ND	2.0E-4	ND	2.4E-3	ND	2.6E-3
m,p-xylene	(H)	ND	1.2E-4	ND	1.4E-3	ND	1.5E-3
o-xylene	(H)	ND	1.2E-4	ND	1.4E-3	ND	1.5E-3
THC as Carbon			2.2E-2		6.7E-3		2.8E-2
Total HAPs			3.8E-3		1.1E-3		4.8E-3
Total Terpenes			0.0E+0		0.0E+0		0.0E+0
Production Rate (MSF/hr)			19.4		25.0		
Vol. Flow Rate (DSCFM)			1503		19733		
Source Moisture (%)			10.6		1.3		
Source Temp (°C)			100.3		26.8		

ND x.xEx = Below Detection Limit of x.xEx; H = CAA HAP; AI = Analytical Interference; ODTH = Oven Dried Tons per Hour; N = Not a HAP or VOC as defined by US EPA; MSF = 1000 square feet

Table 5.10.4. No. 2 Dryer Emissions (Oak Furnish) , Mill 401							
Analyte		Green End Vent (401-2DV3) lb/MSF		Cooling Section Vent (401-2DV1) lb/MSF		Total Dryer Emissions lb/MSF	
acetaldehyde	(H)		7.8E-5	ND	3.3E-3		7.8E-5
acetone	(N)		3.5E-4		1.6E-3		2.0E-3
acrolein	(H)	ND	1.8E-4	ND	3.0E-3	ND	3.2E-3
benzene	(H)	ND	8.0E-5	ND	1.4E-3	ND	1.4E-3
bromomethane	(H)	ND	9.7E-5	ND	1.7E-3	ND	1.7E-3
camphene		ND	2.8E-3	ND	4.7E-2	ND	5.0E-2
3-carene		ND	2.8E-3	ND	4.7E-2	ND	5.0E-2
chloroethane	(H)	ND	6.6E-5	ND	1.1E-3	ND	1.2E-3
chloroethene	(H)	ND	6.4E-5	ND	1.1E-3	ND	1.2E-3
cumene	(H)	ND	2.5E-3	ND	4.2E-2	ND	4.4E-2
p-cymene		ND	2.7E-3	ND	4.7E-2	ND	4.9E-2
1,2-dichloroethane	(H)	ND	1.0E-4	ND	1.7E-3	ND	1.8E-3
cis-1,2-dichloroethylene		ND	9.9E-5	ND	1.7E-3	ND	1.8E-3
formaldehyde	(H)	ND	5.3E-5	ND	8.5E-4	ND	9.1E-4
limonene		ND	2.8E-3	ND	4.7E-2	ND	5.0E-2
p-mentha-1,5-diene		ND	2.8E-3	ND	4.7E-2	ND	5.0E-2
methanol	(H)		1.2E-4	ND	3.1E-3		1.2E-4
methyl ethyl ketone (MEK)	(H)	ND	2.3E-4	ND	3.8E-3	ND	4.0E-3
methyl isobutyl ketone	(H)		2.8E-4	ND	3.8E-3		2.8E-4
methylene chloride	(H)	ND	8.7E-5	ND	1.5E-3	ND	1.6E-3
phenol	(H)	ND	3.7E-4	ND	6.1E-3	ND	6.4E-3
alpha-pinene		ND	2.8E-3	ND	4.7E-2	ND	5.0E-2
beta-pinene		ND	2.8E-3	ND	4.7E-2	ND	5.0E-2
propionaldehyde	(H)	ND	2.1E-4	ND	3.4E-3	ND	3.6E-3
styrene	(H)	ND	1.1E-4	ND	1.8E-3	ND	1.9E-3
toluene	(H)	ND	9.4E-5	ND	1.6E-3	ND	1.7E-3
1,2,4-trichlorobenzene	(H)	ND	1.9E-4	ND	3.2E-3	ND	3.3E-3
m,p-xylene	(H)	ND	1.1E-4	ND	1.8E-3	ND	2.0E-3
o-xylene	(H)	ND	1.1E-4	ND	1.8E-3	ND	2.0E-3
THC as Carbon			4.4E-3		7.3E-3		1.2E-2
Total HAPs			4.7E-4		0.0E+0		4.7E-4
Total Terpenes			0.0E+0		0.0E+0		0.0E+0
Production Rate (MSF/hr)			25.0		19.4		
Vol. Flow Rate (DSCFM)			1737		19900		
Source Moisture (%)			8.3		1.4		
Source Temp (°C)			82.9		30.1		

ND x.xEx = Below Detection Limit of x.xEx; H = CAA HAP; AI = Analytical Interference; ODTH = Oven Dried Tons per Hour; N = Not a HAP or VOC as defined by US EPA; MSF = 1000 square feet

5.11 Results of Tests at Mill 405

At mill 405, tests to measure volatile organic HAP and VOC emissions were conducted on the hardwood veneer dryer, the no. 1 hot press vent, the combined vent for the no. 2 and no. 3 hot presses, and the combined dust baghouse vent. The results of these tests are contained in Tables 5.11.1 through 5.11.3, respectively. In Table 5.11.1, the total dryer emissions were obtained by adding the emissions from the veneer cooling section vent to the sum of the emissions from the heated zones of the dryer. In addition to the individual compound results, total HAP and total VOC values are presented in Tables 5.11.1 through 5.11.3. Source physical parameters (volumetric flow rate, moisture content and dry bulb temperature) and unit production rates are also given for each source. Detailed information on process operating conditions during the tests is included in Section 4.11. The carbon monoxide analysis results for the canister samples collected from the no. 1 dryer second heated zone vent (1DV2) and the cooling section vent (1DV3) are presented in Table 5.11.4.

Table 5.11.1. Dryer Emissions, Mill 405

Analyte		First Heated Zone Vent (405-1DV3) lb/MSF 3/8"	Second Heated Zone Vent (405-1DV2) lb/MSF 3/8"	Total Heated Zone Emissions lb/MSF 3/8"	Cooling Section Vent (405-1DV1) lb/MSF 3/8"	Total Dryer Emissions lb/MSF 3/8"
acetaldehyde	(H)	2.5E-3	2.8E-3	5.2E-3	ND 2.3E-3	5.2E-3
acetone	(N)	3.4E-3	1.1E-3	4.5E-3	ND 2.3E-3	4.5E-3
acrolein	(H)	AI	AI	AI	ND 2.1E-3	ND 2.1E-3
benzene	(H)	ND 3.8E-4	ND 2.1E-4	ND 6.0E-4	ND 7.7E-4	ND 1.4E-3
bromomethane	(H)	ND 4.7E-4	ND 2.6E-4	ND 7.2E-4	ND 9.3E-4	ND 1.7E-3
camphene		ND 1.3E-2	ND 7.4E-3	ND 2.1E-2	ND 2.7E-2	ND 4.7E-2
3-carene		ND 1.3E-2	ND 7.4E-3	ND 2.1E-2	ND 2.7E-2	ND 4.7E-2
chloroethane	(H)	ND 3.2E-4	ND 1.7E-4	ND 4.9E-4	ND 6.3E-4	ND 1.1E-3
chloroethene	(H)	ND 3.1E-4	ND 1.7E-4	ND 4.8E-4	ND 6.1E-4	ND 1.1E-3
cumene	(H)	ND 1.2E-2	ND 6.5E-3	ND 1.8E-2	ND 2.4E-2	ND 4.2E-2
p-cymene		ND 1.3E-2	ND 7.3E-3	ND 2.0E-2	ND 2.6E-2	ND 4.7E-2
1,2-dichloroethane	(H)	ND 4.9E-4	ND 2.7E-4	ND 7.5E-4	ND 9.7E-4	ND 1.7E-3
cis-1,2-dichloroethylene		ND 4.8E-4	ND 2.6E-4	ND 7.4E-4	ND 9.5E-4	ND 1.7E-3
formaldehyde	(H)	1.0E-3	1.4E-3	2.4E-3	ND 6.7E-4	2.4E-3
limonene		ND 1.3E-2	ND 7.4E-3	ND 2.1E-2	ND 2.7E-2	ND 4.7E-2
p-mentha-1,5-diene		ND 1.3E-2	ND 7.4E-3	ND 2.1E-2	ND 2.7E-2	ND 4.7E-2
methanol	(H)	4.6E-3	4.9E-3	9.5E-3	ND 2.2E-3	9.5E-3
methyl ethyl ketone (MEK)	(H)	ND 1.4E-3	ND 7.1E-4	ND 2.1E-3	ND 2.6E-3	ND 4.7E-3
methyl isobutyl ketone	(H)	ND 1.3E-3	ND 6.8E-4	ND 2.0E-3	ND 2.5E-3	ND 4.5E-3
methylene chloride	(H)	ND 4.2E-4	ND 2.3E-4	ND 6.5E-4	ND 8.3E-4	ND 1.5E-3
phenol	(H)	ND 2.2E-3	ND 1.1E-3	ND 3.4E-3	ND 4.2E-3	ND 7.5E-3
alpha-pinene		ND 1.3E-2	ND 7.4E-3	ND 2.1E-2	ND 2.7E-2	ND 4.7E-2
beta-pinene		ND 1.3E-2	ND 7.4E-3	ND 2.1E-2	ND 2.7E-2	ND 4.7E-2
propionaldehyde	(H)	ND 1.2E-3	ND 6.4E-4	ND 1.9E-3	ND 2.3E-3	ND 4.2E-3
styrene	(H)	ND 5.1E-4	ND 2.8E-4	ND 7.9E-4	ND 1.0E-3	ND 1.8E-3
toluene	(H)	ND 4.5E-4	ND 2.5E-4	ND 7.0E-4	ND 9.0E-4	ND 1.6E-3
1,2,4-trichlorobenzene	(H)	ND 8.9E-4	ND 4.9E-4	ND 1.4E-3	ND 1.8E-3	ND 3.2E-3
m,p-xylene	(H)	ND 5.2E-4	ND 2.9E-4	ND 8.1E-4	ND 1.0E-3	ND 1.8E-3
o-xylene	(H)	ND 5.2E-4	ND 2.9E-4	ND 8.1E-4	ND 1.0E-3	ND 1.8E-3
THC as Carbon		3.1E-2	2.2E-2	5.3E-2	3.7E-3	5.7E-2
Total HAPs		8.1E-3	9.0E-3	1.7E-2	0.0E+0	1.7E-2
Total Terpenes		0.0E+0	0.0E+0	0.0E+0	0.0E+0	0.0E+0
Production Rate (MSF 3/8 /hr)		20.6	20.6		20.6	
Vol. Flow Rate (DSCFM)		8067	4702		15087	
Source Moisture (%)		16.8	23.7		0.7	
Source Temp (°C)		138.3	156.5		16.8	

ND x.xEx = Below Detection Limit of x.xEx; H = CAA HAP; AI = Analytical Interference; ODTH = Oven Dried Tons per Hour; N = Not a HAP or VOC as defined by US EPA; MSF = 1000 square feet

Table 5.11.2. Press Emissions, Mill 405					
Analyte		No. 1 Press Vent (405-1PB1) lb/MSF 3/8"		Nos. 2 and 3 Press Vents (405-XPB1) lb/MSF 3/8"	
acetaldehyde	(H)	ND	1.2E-2	ND	6.9E-3
acetone	(N)		4.3E-2		1.8E-2
acrolein	(H)	ND	1.1E-2	ND	6.1E-3
benzene	(H)	ND	4.0E-3	ND	2.3E-3
bromomethane	(H)	ND	4.8E-3	ND	2.7E-3
camphene		ND	1.4E-1	ND	7.9E-2
3-carene		ND	1.4E-1	ND	7.9E-2
chloroethane	(H)	ND	3.3E-3	ND	1.9E-3
chloroethene	(H)	ND	3.2E-3	ND	1.8E-3
cumene	(H)	ND	1.2E-1	ND	6.9E-2
p-cymene		ND	1.4E-1	ND	7.7E-2
1,2-dichloroethane	(H)	ND	5.0E-3	ND	2.9E-3
cis-1,2-dichloroethylene		ND	4.9E-3	ND	2.8E-3
formaldehyde	(H)	ND	2.6E-3		4.8E-3
limonene		ND	1.4E-1	ND	7.9E-2
p-mentha-1,5-diene		ND	1.4E-1	ND	7.9E-2
methanol	(H)		1.6E-2		1.4E-2
methyl ethyl ketone (MEK)	(H)	ND	1.3E-2	ND	7.7E-3
methyl isobutyl ketone	(H)	ND	1.3E-2	ND	7.4E-3
methylene chloride	(H)	ND	4.3E-3	ND	2.5E-3
phenol	(H)	ND	2.2E-2		1.6E-2
alpha-pinene		ND	1.4E-1	ND	7.9E-2
beta-pinene		ND	1.4E-1	ND	7.9E-2
propionaldehyde	(H)	ND	1.2E-2	ND	6.9E-3
styrene	(H)	ND	5.3E-3	ND	3.0E-3
toluene	(H)	ND	4.7E-3	ND	2.7E-3
1,2,4-trichlorobenzene	(H)	ND	9.2E-3	ND	5.2E-3
m,p-xylene	(H)	ND	5.4E-3	ND	3.1E-3
o-xylene	(H)	ND	5.4E-3	ND	3.1E-3
THC as Carbon			8.8E-2		5.7E-2
Total HAPs			1.6E-2		3.5E-2
Total Terpenes			0.0E+0		0.0E+0
Production Rate (MSF 3/8 /hr)			7.7		16.1
Vol. Flow Rate (DSCFM)			32477		35283
Source Moisture (%)			1.5		1.3
Source Temp (°C)			34.2		30.9

ND x.xEx = Below Detection Limit of x.xEx; H = CAA HAP; AI = Analytical Interference; ODTH = Oven Dried Tons per Hour; N = Not a HAP or VOC as defined by US EPA; MSF = 1000 square feet

Table 5.11.3. Miscellaneous Source Emissions, Mill 405			
Analyte		Combined Dust Baghouse Vent Emissions (405-1SI1) lb/MSF 3/8"	
acetaldehyde	(H)	ND	3.4E-3
acetone	(N)		8.9E-3
acrolein	(H)	ND	3.0E-3
benzene	(H)	ND	1.0E-3
bromomethane	(H)	ND	1.3E-3
camphene		ND	3.6E-2
3-carene		ND	3.6E-2
chloroethane	(H)	ND	8.6E-4
chloroethene	(H)	ND	8.3E-4
cumene	(H)	ND	3.2E-2
p-cymene		ND	3.6E-2
1,2-dichloroethane	(H)	ND	1.3E-3
cis-1,2-dichloroethylene		ND	1.3E-3
formaldehyde	(H)	ND	8.7E-4
limonene		ND	3.6E-2
p-mentha-1,5-diene		ND	3.6E-2
methanol	(H)		1.7E-3
methyl ethyl ketone (MEK)	(H)	ND	3.8E-3
methyl isobutyl ketone	(H)	ND	3.6E-3
methylene chloride	(H)	ND	1.1E-3
phenol	(H)	ND	6.2E-3
alpha-pinene		ND	3.6E-2
beta-pinene		ND	3.6E-2
propionaldehyde	(H)	ND	3.4E-3
styrene	(H)	ND	1.4E-3
toluene	(H)	ND	1.2E-3
1,2,4-trichlorobenzene	(H)	ND	2.4E-3
m,p-xylene	(H)	ND	1.4E-3
o-xylene	(H)	ND	1.4E-3
THC as Carbon			1.9E-2
Total HAPs			1.7E-3
Total Terpenes			0.0E+0
Production Rate (MSF 3/8 /hr)			36.4
Vol. Flow Rate (DSCFM)			37593
Source Moisture (%)			1.7
Source Temp (°C)			25.4

ND x.xEx = Below Detection Limit of x.xEx; H = CAA HAP; AI = Analytical Interference; ODTH = Oven Dried Tons per Hour; N = Not a HAP or VOC as defined by US EPA; MSF = 1000 square feet

Table 5.11.4. Carbon Monoxide Emission Test Results, Mill 405			
		CO Emissions	
Source	Run No.	ppmv*	lb/MSF 3/8"
1DV2	N1	79.8	0.089
	N2	56.6	0.050
	N3	73.2	0.072
1DV3	N1	109.0	0.226
	N2	65.2	0.127
	N3	100.8	0.126

*as received, ~1% moisture

6.0 DISCUSSION OF TEST RESULTS

The results of plywood and hardwood veneer mill emissions tests for dryers, presses, miscellaneous sources and control device efficiencies are presented in sections 6.1 through 6.4, respectively.

6.1 Veneer Dryer Emissions

The results of emission tests on the heated zones of western softwood, southern softwood, and hardwood veneer dryers are presented in Tables 6.1.1 through 6.1.3. Emissions test results for the veneer cooler vents associated with the softwood veneer dryers are contained in Table 6.1.4, and those for the hardwood veneer cooler vents are presented in Table 6.1.5. Two radio frequency (RF) dryers were tested, and the results of these tests are listed in Table 6.1.6.

Methanol, formaldehyde and acetaldehyde were the predominant HAPs measured from veneer dryer heated sections. These three compounds accounted for over 90% of the total HAP emissions from the steam heated western and southern dryers, 80% of the emissions from the one gas fired southern softwood dryer, and all of the measured HAP emissions from the hardwood veneer dryers. Figures 6.1.1 through 6.1.3 illustrate the methanol, formaldehyde and acetaldehyde emissions from the heated zones of the veneer dryers tested in this study. Methanol was the largest component of HAPs, generally followed by acetaldehyde and then formaldehyde. It should be noted that the emission rates in Table 6.1.3 and Figure 6.1.3 are presented as lb/MSF (surface area), rather than as lb/MSF (3/8" basis). At hardwood veneer mills, production is normally reported on a surface area basis with no adjustment for veneer thickness.

Figure 6.1.4 is a comparison between western and southern softwood veneer dryer heated zone HAP emissions. The average total HAP emission rate for the southern softwood mills (0.063 lb/MSF 3/8") was lower than that for the western softwood mills (0.093 lb/MSF 3/8"). In Figure 6.1.5, HAP emissions from the hardwood veneer dryer heated sections have been normalized to the production units used at softwood veneer mills and compared to the HAP emissions from softwood veneer dryer heated sections. Average methanol emission rates are similar, but acetaldehyde and formaldehyde are lower. Thus, the average total HAP emissions from hardwood veneer dryers (0.046 lb/MSF 3/8") are approximately 60% of those from the softwood dryer heated zones.

Acetaldehyde, formaldehyde and methanol have been measured as thermal decomposition products of wood at temperatures similar to those found in the veneer dryers tested in this study, and a lowered methoxyl content has been observed in lignin heated to these temperatures. Bacterial and fungal degradation of wood components proceeds by enzymatic pathways which might also result in the formation of HAPs (Fengel, 1989). This last mechanism could explain the difference in dryer 188 total HAP emissions illustrated in Figure 6.1.6. Compared to drying fresh veneer, drying 7-day old Douglas-fir veneer had notably higher total HAP emissions.

Only one direct gas-fired dryer was tested. In Figure 6.1.7, emissions from this gas-fired dryer are compared to a steam heated dryer operating at the same mill. The figure shows methanol, alpha-pinene, beta-pinene, and limonene emissions to be similar from the two dryers. Acetaldehyde, acrolein and formaldehyde emissions are significantly higher in the direct gas-fired dryer. Table 6.1.2 shows that benzene, toluene, styrene, and xylene isomer emissions are also higher in the gas-fired dryer. THC emissions are higher in the gas-fired dryer although methane accounts for part of the difference (methane constitutes about seven percent of the VOC measured from the gas-fired dryer).

Table 6.1.1. Summary of Western Softwood Veneer Dryer Heated Zone Emissions

Analyte		Steam Heated Dryers								
		Mill 112 No.2 Dryer (Douglas Fir Furnish) lb/MSF 3/8"	Mill 112 No.2 Dryer (Pine Furnish) lb/MSF 3/8"	Mill 112 Combined Dryers (Douglas Fir Furnish) lb/MSF 3/8"	Mill 112 Combined Dryers (Pine/Fir Furnish) lb/MSF 3/8"	Mill 115 (Mixed Fir Furnish) lb/MSF 3/8"	Mill 155 (White Fir Furnish) lb/MSF 3/8"	Mill 188 (Fresh Douglas Fir Furnish) lb/MSF 3/8"	Mill 188 (7 Day Old Douglas Fir Furnish) lb/MSF 3/8"	Average Emissions lb/MSF 3/8"
acetaldehyde	(H)	2.2E-2	1.0E-2	1.9E-2	3.5E-2	3.5E-2	7.4E-4	6.8E-3	4.8E-2	2.2E-2
acetone	(N)	7.8E-3	1.4E-2	2.1E-2	2.9E-2	3.2E-2	7.8E-3	4.3E-3	9.3E-3	1.6E-2
acrolein	(H)	ND 3.6E-3	ND 5.3E-3	ND 2.2E-3	9.9E-4	ND 4.6E-3	ND 2.1E-3	ND 2.7E-3	ND 4.3E-3	1.2E-4
benzene	(H)	ND 1.6E-3	ND 2.3E-3	ND 9.2E-4	4.9E-3	ND 1.5E-3	ND 6.7E-4	ND 1.1E-3	ND 1.6E-3	6.2E-4
bromomethane	(H)	ND 1.9E-3	ND 2.8E-3	ND 1.1E-3	ND 1.8E-3	ND 1.8E-3	ND 8.2E-4	ND 1.3E-3	ND 1.9E-3	ND 1.7E-3
camphene		ND 5.4E-2	ND 8.0E-2	ND 3.2E-2	ND 5.0E-2	ND 5.3E-2	ND 2.3E-2	ND 3.9E-2	ND 5.6E-2	ND 4.8E-2
3-carene		ND 5.4E-2	4.1E-1	ND 3.2E-2	9.1E-2	ND 5.3E-2	ND 2.3E-2	ND 3.9E-2	ND 5.6E-2	6.3E-2
chloroethane	(H)	ND 1.3E-3	ND 1.9E-3	ND 7.6E-4	ND 1.2E-3	ND 1.2E-3	ND 5.5E-4	ND 9.1E-4	ND 1.3E-3	ND 1.1E-3
chloroethene	(H)	ND 1.2E-3	ND 1.8E-3	ND 7.3E-4	ND 1.2E-3	ND 1.2E-3	ND 5.4E-4	ND 8.8E-4	ND 1.3E-3	ND 1.1E-3
cumene	(H)	ND 4.8E-2	ND 7.1E-2	ND 2.8E-2	ND 4.4E-2	ND 4.6E-2	ND 2.1E-2	ND 3.4E-2	ND 4.9E-2	ND 4.3E-2
p-cymene		ND 5.3E-2	ND 7.9E-2	ND 3.1E-2	ND 5.0E-2	ND 5.2E-2	ND 2.3E-2	ND 3.8E-2	ND 5.5E-2	ND 4.8E-2
1,2-dichloroethane	(H)	ND 2.0E-3	ND 2.9E-3	ND 1.2E-3	ND 1.8E-3	ND 1.9E-3	ND 8.5E-4	ND 1.4E-3	ND 2.0E-3	ND 1.8E-3
cis-1,2-dichloroethylene		ND 1.9E-3	ND 2.9E-3	ND 1.1E-3	ND 1.8E-3	ND 1.9E-3	ND 8.3E-4	ND 1.4E-3	ND 2.0E-3	ND 1.7E-3
formaldehyde	(H)	6.5E-3	6.2E-3	1.4E-2	9.9E-2	4.0E-2	7.3E-3	6.1E-3	1.6E-2	2.4E-2
limonene		ND 5.4E-2	1.9E-2	ND 3.2E-2	ND 5.0E-2	ND 5.3E-2	ND 2.3E-2	ND 3.9E-2	ND 5.6E-2	2.4E-3
p-mentha-1,5-diene		ND 5.4E-2	ND 8.0E-2	ND 3.2E-2	ND 5.0E-2	ND 5.3E-2	ND 2.3E-2	ND 3.9E-2	ND 5.6E-2	ND 4.8E-2
methanol	(H)	2.6E-2	3.9E-2	2.3E-2	2.8E-2	6.6E-2	4.7E-2	1.2E-2	4.9E-2	3.6E-2
methyl ethyl ketone (MEK)	(H)	ND 4.6E-3	ND 6.7E-3	ND 2.8E-3	ND 4.0E-3	ND 5.8E-3	ND 2.6E-3	ND 3.4E-3	ND 5.4E-3	ND 4.4E-3
methyl isobutyl ketone	(H)	ND 4.5E-3	ND 6.6E-3	ND 2.7E-3	ND 4.0E-3	ND 5.4E-3	ND 2.4E-3	ND 3.3E-3	ND 5.2E-3	ND 4.3E-3
methylene chloride	(H)	ND 1.7E-3	ND 2.5E-3	ND 1.0E-3	ND 1.6E-3	ND 1.6E-3	ND 7.3E-4	ND 1.2E-3	ND 1.7E-3	ND 1.5E-3
phenol	(H)	ND 7.3E-3	ND 1.1E-2	ND 4.4E-3	ND 6.4E-3	4.9E-3	1.5E-3	5.6E-3	9.3E-3	2.7E-3
alpha-pinene		3.0E-1	3.9E-2	1.4E-1	5.2E-2	ND 5.3E-2	ND 2.3E-2	2.2E-1	2.3E-1	1.2E-1
beta-pinene		1.1E-2	7.1E-2	ND 3.2E-2	ND 5.0E-2	ND 5.3E-2	ND 2.3E-2	ND 3.9E-2	ND 5.6E-2	1.0E-2
propionaldehyde	(H)	ND 4.1E-3	4.1E-3	9.4E-4	5.9E-3	1.7E-2	ND 2.3E-3	ND 3.0E-3	ND 4.9E-3	3.5E-3
styrene	(H)	ND 2.1E-3	ND 3.1E-3	ND 1.2E-3	ND 1.9E-3	ND 2.0E-3	ND 9.0E-4	ND 1.5E-3	ND 2.1E-3	ND 1.8E-3
toluene	(H)	ND 1.8E-3	ND 2.7E-3	ND 1.1E-3	2.0E-2	ND 1.8E-3	ND 7.9E-4	ND 1.3E-3	ND 1.9E-3	2.5E-3
1,2,4-trichlorobenzene	(H)	ND 3.6E-3	ND 5.3E-3	ND 2.1E-3	ND 3.3E-3	ND 3.5E-3	ND 1.6E-3	ND 2.6E-3	ND 3.7E-3	ND 3.2E-3
m,p-xylene	(H)	ND 2.1E-3	ND 3.1E-3	ND 1.2E-3	3.8E-3	ND 2.0E-3	3.8E-4	ND 1.5E-3	ND 2.2E-3	5.2E-4
o-xylene	(H)	ND 2.1E-3	ND 3.1E-3	ND 1.2E-3	ND 2.0E-3	ND 2.0E-3	ND 9.1E-4	ND 1.5E-3	ND 2.2E-3	ND 1.9E-3
THC as Carbon		7.1E-1	1.4E+0	3.5E-1	7.2E-1	1.7E-1	1.0E-1	4.9E-1	5.3E-1	5.6E-1
Total HAPs		5.4E-2	6.0E-2	5.6E-2	2.0E-1	1.6E-1	5.7E-2	3.0E-2	1.2E-1	9.3E-2
Total Terpenes		3.1E-1	5.4E-1	1.4E-1	1.4E-1	0.0E+0	0.0E+0	2.2E-1	2.3E-1	2.0E-1

ND x.xEx = Below Detection Limit of x.xEx; H = CAA HAP; AI = Analytical Interference; ODTH = Oven Dried Tons per Hour; N = Not a HAP or VOC as defined by US EPA; MSF = 1000 square feet

Table 6.1.2. Summary of Southern Softwood Veneer Dryer Heated Zone Emissions

Analyte		Steam Heated Dryers						Gas Fired Dryer
			Mill 170					
		Mill 165 Combined Dryers lb/MSF 3/8"	No. 2 Dryer lb/MSF 3/8"	No. 3 Dryer lb/MSF 3/8"	Combined Dryers lb/MSF 3/8"	Mill 194 No. 2 Dryer lb/MSF 3/8"	Average Emissions lb/MSF 3/8"	Mill 194 No. 1 Dryer lb/MSF 3/8"
acetaldehyde	(H)	8.0E-3	1.5E-2	2.0E-2	1.5E-2	1.2E-2	1.4E-2	3.8E-2
acetone	(N)	8.1E-3	1.7E-2	2.4E-2	1.5E-2	8.4E-3	1.4E-2	6.0E-2
acrolein	(H)	ND 2.2E-3	ND 1.1E-3	ND 1.5E-3	ND 9.2E-4	2.2E-3	4.4E-4	1.2E-2
benzene	(H)	ND 8.8E-4	ND 4.6E-4	ND 5.8E-4	ND 3.5E-4	ND 6.7E-4	ND 5.9E-4	7.8E-3
bromomethane	(H)	ND 1.1E-3	ND 5.6E-4	ND 7.0E-4	ND 4.3E-4	ND 8.1E-4	ND 7.1E-4	ND 8.8E-4
camphene		ND 3.1E-2	ND 1.6E-2	ND 2.0E-2	ND 1.2E-2	ND 2.3E-2	ND 2.0E-2	ND 2.5E-2
3-carene		ND 3.1E-2	ND 1.6E-2	ND 2.0E-2	ND 1.2E-2	ND 2.3E-2	ND 2.0E-2	ND 2.5E-2
chloroethane	(H)	ND 7.3E-4	ND 3.8E-4	ND 4.8E-4	ND 2.9E-4	ND 5.5E-4	ND 4.9E-4	ND 6.0E-4
chloroethene	(H)	ND 7.1E-4	ND 3.7E-4	ND 4.6E-4	ND 2.8E-4	ND 5.3E-4	ND 4.7E-4	ND 5.8E-4
cumene	(H)	ND 2.7E-2	ND 1.4E-2	ND 1.8E-2	ND 1.1E-2	ND 2.1E-2	ND 1.8E-2	ND 2.2E-2
p-cymene		ND 3.0E-2	ND 1.6E-2	ND 2.0E-2	ND 1.2E-2	ND 2.3E-2	ND 2.0E-2	ND 2.5E-2
1,2-dichloroethane	(H)	ND 1.1E-3	ND 5.8E-4	ND 7.3E-4	ND 4.5E-4	ND 8.4E-4	ND 7.4E-4	ND 9.2E-4
cis-1,2-dichloroethylene		ND 1.1E-3	ND 5.7E-4	ND 7.2E-4	ND 4.4E-4	ND 8.3E-4	ND 7.3E-4	ND 9.0E-4
formaldehyde	(H)	1.9E-2	6.6E-3	6.8E-3	8.2E-3	8.3E-3	9.9E-3	8.7E-2
limonene		4.3E-2	2.5E-1	2.0E-1	1.5E-1	3.0E-2	1.4E-1	7.7E-2
p-mentha-1,5-diene		ND 3.1E-2	2.4E-2	1.7E-2	1.7E-2	ND 2.3E-2	1.2E-2	ND 2.5E-2
methanol	(H)	2.6E-2	2.5E-2	5.4E-2	4.1E-2	4.1E-2	3.7E-2	3.6E-2
methyl ethyl ketone (MEK)	(H)	ND 2.7E-3	ND 1.4E-3	ND 1.9E-3	ND 1.2E-3	ND 2.1E-3	ND 1.9E-3	ND 2.2E-3
methyl isobutyl ketone	(H)	ND 2.7E-3	ND 1.4E-3	ND 1.8E-3	ND 1.1E-3	ND 2.1E-3	ND 1.8E-3	3.1E-3
methylene chloride	(H)	ND 9.6E-4	ND 5.0E-4	ND 6.3E-4	ND 3.8E-4	ND 7.2E-4	ND 6.4E-4	ND 7.9E-4
phenol	(H)	1.6E-3	ND 2.2E-3	1.0E-3	8.4E-4	3.5E-3	1.4E-3	2.9E-3
alpha-pinene		1.5E+0	2.7E+0	1.9E+0	2.1E+0	8.9E-1	1.8E+0	8.6E-1
beta-pinene		4.5E-1	7.1E-1	4.8E-1	5.5E-1	3.3E-1	5.0E-1	3.4E-1
propionaldehyde	(H)	ND 2.4E-3	ND 1.3E-3	ND 1.7E-3	ND 1.0E-3	ND 1.9E-3	ND 1.7E-3	ND 2.0E-3
styrene	(H)	ND 1.2E-3	ND 6.1E-4	ND 7.7E-4	ND 4.7E-4	ND 8.9E-4	ND 7.8E-4	1.2E-3
toluene	(H)	ND 1.0E-3	ND 5.4E-4	ND 6.8E-4	ND 4.2E-4	ND 7.9E-4	ND 6.9E-4	9.2E-3
1,2,4-trichlorobenzene	(H)	ND 2.0E-3	ND 1.1E-3	ND 1.3E-3	ND 8.2E-4	ND 1.5E-3	ND 1.4E-3	ND 1.7E-3
m,p-xylene	(H)	ND 1.2E-3	ND 6.3E-4	ND 7.9E-4	ND 4.8E-4	ND 9.1E-4	ND 8.0E-4	3.8E-3
o-xylene	(H)	ND 1.2E-3	ND 6.3E-4	ND 7.9E-4	ND 4.8E-4	ND 9.1E-4	ND 8.0E-4	ND 9.9E-4
THC as Carbon		3.2E+0			3.7E+0	1.5E+0	2.8E+0	2.5E+0
Total HAPs		5.5E-2	4.6E-2	8.1E-2	6.5E-2	6.6E-2	6.3E-2	2.0E-1
Total Terpenes		1.9E+0	3.7E+0	2.6E+0	2.8E+0	1.2E+0	2.4E+0	1.3E+0

ND x.xEx = Below Detection Limit of x.xEx; H = CAA HAP; AI = Analytical Interference; ODTH = Oven Dried Tons per Hour; N = Not a HAP or VOC as defined by US EPA; MSF = 1000 square feet

Table 6.1.3. Summary of Hardwood Veneer Dryer Heated Section Emissions

Analyte		Steam Heated Dryers, Mill 400			Steam Heated Dryers, Mill 401				Average Emissions lb/MSF	Direct Wood Fired Dryer Mill 405 Poplar Furnish lb/MSF
		No. 3 Dryer		No. 4 Dryer	No. 1 Dryer		No. 2 Dryer			
		White Oak Furnish lb/MSF	Cherry Furnish lb/MSF	Red Oak Furnish lb/MSF	Red Oak Furnish lb/MSF	White Oak Furnish lb/MSF	Maple Furnish lb/MSF	Oak Furnish lb/MSF		
acetaldehyde	(H)	2.0E-4	1.5E-4	2.6E-4	6.2E-4	4.3E-4	1.0E-4	7.8E-5	2.6E-4	2.0E-3
acetone	(N)	6.9E-5	7.4E-5	2.2E-4	3.6E-4	3.9E-4	3.2E-4	3.5E-4	2.5E-4	1.7E-3
acrolein	(H)	ND 1.1E-4	ND 7.4E-5	ND 1.7E-4	ND 2.9E-4	ND 2.3E-4	ND 2.1E-4	ND 1.8E-4	ND 1.8E-4	AI
benzene	(H)	ND 5.8E-5	ND 3.2E-5	ND 6.8E-5	ND 1.3E-4	ND 9.4E-5	ND 8.8E-5	ND 8.0E-5	ND 7.8E-5	ND 2.3E-4
bromomethane	(H)	ND 7.0E-5	ND 3.8E-5	ND 8.3E-5	ND 1.5E-4	ND 1.1E-4	ND 1.1E-4	ND 9.7E-5	ND 9.5E-5	ND 2.8E-4
camphene		ND 2.0E-3	ND 1.1E-3	ND 2.4E-3	ND 4.4E-3	ND 3.3E-3	ND 3.1E-3	ND 2.8E-3	ND 2.7E-3	ND 7.9E-3
3-carene		ND 2.0E-3	ND 1.1E-3	ND 2.4E-3	ND 4.4E-3	ND 3.3E-3	ND 3.1E-3	ND 2.8E-3	ND 2.7E-3	ND 7.9E-3
chloroethane	(H)	ND 4.8E-5	ND 2.6E-5	ND 5.6E-5	ND 1.0E-4	ND 7.8E-5	ND 7.3E-5	ND 6.6E-5	ND 6.4E-5	ND 1.9E-4
chloroethene	(H)	ND 4.6E-5	ND 2.5E-5	ND 5.5E-5	ND 1.0E-4	ND 7.5E-5	ND 7.0E-5	ND 6.4E-5	ND 6.2E-5	ND 1.8E-4
cumene	(H)	ND 1.8E-3	ND 9.7E-4	ND 2.1E-3	ND 3.9E-3	ND 2.9E-3	ND 2.7E-3	ND 2.5E-3	ND 2.4E-3	ND 7.0E-3
p-cymene		ND 2.0E-3	ND 1.1E-3	ND 2.3E-3	ND 4.3E-3	ND 3.2E-3	ND 3.0E-3	ND 2.7E-3	ND 2.7E-3	ND 7.8E-3
1,2-dichloroethane	(H)	ND 7.3E-5	ND 4.0E-5	ND 8.7E-5	ND 1.6E-4	ND 1.2E-4	ND 1.1E-4	ND 1.0E-4	ND 9.9E-5	ND 2.9E-4
cis-1,2-dichloroethylene		ND 7.2E-5	ND 3.9E-5	ND 8.5E-5	ND 1.6E-4	ND 1.2E-4	ND 1.1E-4	ND 9.9E-5	ND 9.7E-5	ND 2.8E-4
formaldehyde	(H)	6.3E-5	2.5E-5	7.7E-5	3.0E-5	1.3E-4	1.2E-4	ND 5.3E-5	6.3E-5	9.2E-4
limonene		ND 2.0E-3	ND 1.1E-3	ND 2.4E-3	ND 4.4E-3	ND 3.3E-3	ND 3.1E-3	ND 2.8E-3	ND 2.7E-3	ND 7.9E-3
p-mentha-1,5-diene		ND 2.0E-3	ND 1.1E-3	ND 2.4E-3	ND 4.4E-3	ND 3.3E-3	ND 3.1E-3	ND 2.8E-3	ND 2.7E-3	ND 7.9E-3
methanol	(H)	1.4E-3	6.5E-4	3.0E-3	4.4E-3	5.6E-3	3.5E-3	1.2E-4	2.7E-3	3.6E-3
methyl ethyl ketone (MEK)	(H)	ND 1.4E-4	ND 9.3E-5	ND 2.2E-4	ND 3.6E-4	ND 2.9E-4	ND 2.7E-4	ND 2.3E-4	ND 2.3E-4	ND 7.9E-4
methyl isobutyl ketone	(H)	ND 1.4E-4	ND 9.1E-5	ND 2.1E-4	ND 3.6E-4	ND 2.8E-4	ND 2.6E-4	2.8E-4	4.0E-5	ND 7.6E-4
methylene chloride	(H)	ND 6.3E-5	ND 3.4E-5	ND 7.4E-5	ND 1.4E-4	ND 1.0E-4	ND 9.6E-5	ND 8.7E-5	ND 8.5E-5	ND 2.5E-4
phenol	(H)	ND 2.1E-4	ND 1.5E-4	ND 3.5E-4	8.3E-5	8.5E-5	ND 4.3E-4	ND 3.7E-4	2.4E-5	ND 1.3E-3
alpha-pinene		ND 2.0E-3	ND 1.1E-3	ND 2.4E-3	ND 4.4E-3	ND 3.3E-3	ND 3.1E-3	ND 2.8E-3	ND 2.7E-3	ND 7.9E-3
beta-pinene		ND 2.0E-3	ND 1.1E-3	ND 2.4E-3	ND 4.4E-3	ND 3.3E-3	ND 3.1E-3	ND 2.8E-3	ND 2.7E-3	ND 7.9E-3
propionaldehyde	(H)	ND 1.2E-4	ND 8.3E-5	ND 1.9E-4	ND 3.3E-4	ND 2.6E-4	ND 6.5E-5	ND 2.1E-4	ND 1.8E-4	ND 7.1E-4
styrene	(H)	ND 7.7E-5	ND 4.2E-5	ND 9.1E-5	ND 1.7E-4	ND 1.3E-4	ND 1.2E-4	ND 1.1E-4	ND 1.0E-4	ND 3.0E-4
toluene	(H)	ND 6.8E-5	ND 3.7E-5	ND 8.1E-5	ND 1.5E-4	ND 1.1E-4	ND 1.0E-4	ND 9.4E-5	ND 9.2E-5	ND 2.7E-4
1,2,4-trichlorobenzene	(H)	ND 1.3E-4	ND 7.3E-5	ND 1.6E-4	ND 2.9E-4	ND 2.2E-4	ND 2.0E-4	ND 1.9E-4	ND 1.8E-4	ND 5.3E-4
m,p-xylene	(H)	ND 7.9E-5	ND 4.3E-5	ND 9.3E-5	ND 1.7E-4	ND 1.3E-4	ND 1.2E-4	ND 1.1E-4	ND 1.1E-4	ND 3.1E-4
o-xylene	(H)	ND 7.9E-5	ND 4.3E-5	ND 9.3E-5	ND 1.7E-4	ND 1.3E-4	ND 1.2E-4	ND 1.1E-4	ND 1.1E-4	ND 3.1E-4
THC as Carbon		9.1E-3	3.4E-3	2.0E-2	3.7E-2	2.3E-2	2.2E-2	4.4E-3	1.7E-2	2.0E-2
Total HAPs		1.7E-3	8.3E-4	3.4E-3	5.1E-3	6.3E-3	3.8E-3	4.7E-4	3.1E-3	6.5E-3
Total Terpenes		0.0E+0	0.0E+0	0.0E+0	0.0E+0	0.0E+0	0.0E+0	0.0E+0	0.0E+0	0.0E+0

ND x.xEx = Below Detection Limit of x.xEx; H = CAA HAP; AI = Analytical Interference; ODTH = Oven Dried Tons per Hour; N = Not a HAP or VOC as defined by US EPA; MSF = 1000 square feet

Table 6.1.4. Summary of Softwood Veneer Cooling Section Emissions

Analyte		Western Softwood Veneer Cooling Sections				Southern Softwood Veneer Cooling Sections			
		Mill 112 (Douglas Fir Furnish) lb/MSF 3/8"	Mill 115 lb/MSF 3/8"	Mill 155 lb/MSF 3/8"	Average Emissions lb/MSF 3/8"	Mill 165 lb/MSF 3/8"	Mill 170 lb/MSF 3/8"	Mill 194 lb/MSF 3/8"	Average Emissions lb/MSF 3/8"
acetaldehyde	(H)	9.0E-3	4.8E-4	1.5E-3	3.7E-3	ND 6.5E-3	ND 4.8E-3	4.0E-4	1.3E-4
acetone	(N)	1.9E-2	1.0E-2	4.3E-3	1.1E-2	2.5E-3	2.1E-3	1.4E-3	2.0E-3
acrolein	(H)	ND 1.2E-2	ND 6.5E-3	ND 3.6E-3	ND 7.5E-3	ND 5.8E-3	ND 4.4E-3	ND 6.8E-3	ND 5.6E-3
benzene	(H)	ND 5.5E-3	ND 2.6E-3	ND 1.5E-3	ND 3.2E-3	ND 2.3E-3	ND 1.8E-3	ND 2.5E-3	ND 2.2E-3
bromomethane	(H)	ND 6.7E-3	ND 3.2E-3	ND 1.8E-3	ND 3.9E-3	ND 2.7E-3	ND 2.2E-3	ND 3.1E-3	ND 2.7E-3
camphene		ND 1.9E-1	ND 9.2E-2	ND 5.1E-2	ND 1.1E-1	ND 7.9E-2	ND 6.2E-2	ND 8.8E-2	ND 7.6E-2
3-carene		ND 1.9E-1	ND 9.2E-2	ND 5.1E-2	ND 1.1E-1	ND 7.9E-2	ND 6.2E-2	ND 8.8E-2	ND 7.6E-2
chloroethane	(H)	ND 4.5E-3	ND 2.2E-3	ND 1.2E-3	ND 2.6E-3	ND 1.9E-3	ND 1.5E-3	ND 2.1E-3	ND 1.8E-3
chloroethene	(H)	ND 4.4E-3	ND 2.1E-3	ND 1.2E-3	ND 2.6E-3	ND 1.8E-3	ND 1.4E-3	ND 2.0E-3	ND 1.8E-3
cumene	(H)	ND 1.7E-1	ND 8.1E-2	ND 4.5E-2	ND 9.9E-2	ND 7.0E-2	ND 5.5E-2	ND 7.8E-2	ND 6.7E-2
p-cymene		ND 1.9E-1	ND 9.1E-2	ND 5.1E-2	ND 1.1E-1	ND 7.8E-2	ND 6.1E-2	ND 8.7E-2	ND 7.5E-2
1,2-dichloroethane	(H)	ND 7.0E-3	ND 3.4E-3	ND 1.9E-3	ND 4.1E-3	ND 2.9E-3	ND 2.3E-3	ND 3.2E-3	ND 2.8E-3
cis-1,2-dichloroethylene		ND 6.8E-3	ND 3.3E-3	ND 1.8E-3	ND 4.0E-3	ND 2.8E-3	ND 2.2E-3	ND 3.1E-3	ND 2.7E-3
formaldehyde	(H)	ND 3.5E-3	ND 1.9E-3	ND 9.4E-4	ND 2.1E-3	2.5E-3	9.0E-4	4.4E-4	1.3E-3
limonene		ND 1.9E-1	ND 9.2E-2	ND 5.1E-2	ND 1.1E-1	ND 7.9E-2	ND 6.2E-2	ND 8.8E-2	ND 7.6E-2
p-mentha-1,5-diene		ND 1.9E-1	ND 9.2E-2	ND 5.1E-2	ND 1.1E-1	ND 7.9E-2	ND 6.2E-2	ND 8.8E-2	ND 7.6E-2
methanol	(H)	1.4E-2	1.4E-3	ND 3.8E-3	5.0E-3	1.9E-2	1.4E-3	1.8E-2	1.3E-2
methyl ethyl ketone (MEK)	(H)	ND 1.6E-2	ND 8.0E-3	ND 4.6E-3	ND 9.3E-3	ND 7.3E-3	ND 5.5E-3	ND 8.5E-3	ND 7.1E-3
methyl isobutyl ketone	(H)	1.6E-2	ND 8.0E-3	ND 4.4E-3	5.2E-3	ND 7.1E-3	ND 5.4E-3	ND 8.2E-3	ND 6.9E-3
methylene chloride	(H)	ND 6.0E-3	ND 2.9E-3	ND 1.6E-3	ND 3.5E-3	ND 2.5E-3	ND 1.9E-3	ND 2.7E-3	ND 2.4E-3
phenol	(H)	ND 2.5E-2	1.0E-3	ND 7.3E-3	3.4E-4	ND 1.2E-2	ND 8.8E-3	3.9E-3	1.3E-3
alpha-pinene		ND 1.9E-1	ND 9.2E-2	ND 5.1E-2	ND 1.1E-1	8.9E-2	1.5E-2	ND 8.8E-2	3.4E-2
beta-pinene		ND 1.9E-1	ND 9.2E-2	ND 5.1E-2	ND 1.1E-1	ND 7.9E-2	ND 6.2E-2	ND 8.8E-2	ND 7.6E-2
propionaldehyde	(H)	ND 1.4E-2	ND 7.3E-3	ND 4.1E-3	ND 8.4E-3	ND 6.6E-3	ND 4.9E-3	ND 7.6E-3	ND 6.4E-3
styrene	(H)	ND 7.3E-3	ND 3.5E-3	ND 2.0E-3	ND 4.3E-3	ND 3.0E-3	ND 2.4E-3	ND 3.4E-3	ND 2.9E-3
toluene	(H)	ND 6.5E-3	ND 3.1E-3	ND 1.7E-3	ND 3.8E-3	ND 2.7E-3	ND 2.1E-3	ND 3.0E-3	ND 2.6E-3
1,2,4-trichlorobenzene	(H)	ND 1.3E-2	ND 6.1E-3	ND 3.4E-3	ND 7.4E-3	ND 5.2E-3	ND 4.1E-3	ND 5.9E-3	ND 5.1E-3
m,p-xylene	(H)	ND 7.5E-3	ND 3.6E-3	2.9E-3	9.8E-4	ND 3.1E-3	ND 2.4E-3	ND 3.4E-3	ND 3.0E-3
o-xylene	(H)	ND 7.5E-3	ND 3.6E-3	1.8E-3	5.9E-4	ND 3.1E-3	ND 2.4E-3	ND 3.4E-3	ND 3.0E-3
THC as Carbon		1.2E-1	1.9E-2		6.9E-2			3.8E-2	3.8E-2
Total HAPs		3.8E-2	2.9E-3	6.2E-3	1.6E-2	2.1E-2	2.3E-3	2.2E-2	1.5E-2
Total Terpenes		0.0E+0	0.0E+0	0.0E+0	0.0E+0	8.9E-2	1.5E-2	0.0E+0	3.4E-2

ND x.xEx = Below Detection Limit of x.xEx; H = CAA HAP; AI = Analytical Interference; ODTH = Oven Dried Tons per Hour; N = Not a HAP or VOC as defined by US EPA; MSF = 1000 square feet

Table 6.1.5. Summary of Hardwood Veneer Cooling Section Emissions

Analyte		Mill 400			Mill 401				Average Emissions lb/MSF	Mill 405 lb/MSF
		No. 3 Dryer		No. 4 Dryer	No. 1 Dryer		No. 2 Dryer			
		White Oak Furnish lb/MSF	Cherry Furnish lb/MSF	Red Oak Furnish lb/MSF	Red Oak Furnish lb/MSF	White Oak Furnish lb/MSF	Maple Furnish lb/MSF	Oak Furnish lb/MSF		
acetaldehyde	(H)	2.3E-3	5.5E-4	7.1E-4	3.8E-3	1.0E-3	1.1E-3	ND 3.3E-3	1.3E-3	ND 8.8E-4
acetone	(N)	2.8E-3	1.9E-3	1.3E-3	4.3E-3	4.2E-3	3.9E-3	1.6E-3	2.8E-3	ND 8.9E-4
acrolein	(H)	ND 2.3E-3	ND 1.4E-3	ND 1.4E-3	ND 3.0E-3	ND 2.7E-3	ND 2.1E-3	ND 3.0E-3	ND 2.3E-3	ND 7.8E-4
benzene	(H)	ND 1.1E-3	ND 5.7E-4	ND 5.9E-4	ND 1.2E-3	ND 1.1E-3	ND 1.0E-3	ND 1.4E-3	ND 1.0E-3	ND 2.9E-4
bromomethane	(H)	ND 1.3E-3	ND 7.0E-4	ND 7.1E-4	ND 1.5E-3	ND 1.4E-3	ND 1.2E-3	ND 1.7E-3	ND 1.2E-3	ND 3.5E-4
camphene		ND 3.8E-2	ND 2.0E-2	ND 2.0E-2	ND 4.3E-2	ND 3.9E-2	ND 3.5E-2	ND 4.7E-2	ND 3.5E-2	ND 1.0E-2
3-carene		ND 3.8E-2	ND 2.0E-2	ND 2.0E-2	ND 4.3E-2	ND 3.9E-2	ND 3.5E-2	ND 4.7E-2	ND 3.5E-2	ND 1.0E-2
chloroethane	(H)	ND 9.1E-4	ND 4.7E-4	ND 4.8E-4	ND 1.0E-3	ND 9.2E-4	ND 8.4E-4	ND 1.1E-3	ND 8.2E-4	ND 2.4E-4
chloroethene	(H)	ND 8.8E-4	ND 4.6E-4	ND 4.7E-4	ND 9.9E-4	ND 8.9E-4	ND 8.1E-4	ND 1.1E-3	ND 8.0E-4	ND 2.3E-4
cumene	(H)	ND 3.4E-2	ND 1.8E-2	ND 1.8E-2	ND 3.8E-2	ND 3.4E-2	ND 3.1E-2	ND 4.2E-2	ND 3.1E-2	ND 9.0E-3
p-cymene		ND 3.8E-2	ND 2.0E-2	ND 2.0E-2	ND 4.2E-2	ND 3.8E-2	ND 3.5E-2	ND 4.7E-2	ND 3.4E-2	ND 1.0E-2
1,2-dichloroethane	(H)	ND 1.4E-3	ND 7.3E-4	ND 7.4E-4	ND 1.6E-3	ND 1.4E-3	ND 1.3E-3	ND 1.7E-3	ND 1.3E-3	ND 3.7E-4
cis-1,2-dichloroethylene		ND 1.4E-3	ND 7.1E-4	ND 7.3E-4	ND 1.5E-3	ND 1.4E-3	ND 1.3E-3	ND 1.7E-3	ND 1.2E-3	ND 3.6E-4
formaldehyde	(H)	ND 6.1E-4	2.6E-4	ND 4.1E-4	6.2E-4	ND 8.0E-4	ND 5.9E-4	ND 8.5E-4	1.2E-4	ND 2.5E-4
limonene		ND 3.8E-2	ND 2.0E-2	ND 2.0E-2	ND 4.3E-2	ND 3.9E-2	ND 3.5E-2	ND 4.7E-2	ND 3.5E-2	ND 1.0E-2
p-mentha-1,5-diene		ND 3.8E-2	ND 2.0E-2	ND 2.0E-2	ND 4.3E-2	ND 3.9E-2	ND 3.5E-2	ND 4.7E-2	ND 3.5E-2	ND 1.0E-2
methanol	(H)	8.0E-4	ND 1.5E-3	ND 1.5E-3	1.3E-3	ND 2.9E-3	ND 2.2E-3	ND 3.1E-3	3.1E-4	ND 8.4E-4
methyl ethyl ketone (MEK)	(H)	ND 2.8E-3	ND 1.8E-3	ND 1.8E-3	ND 3.8E-3	ND 3.4E-3	ND 2.7E-3	ND 3.8E-3	ND 2.9E-3	ND 9.9E-4
methyl isobutyl ketone	(H)	ND 2.9E-3	ND 1.8E-3	6.6E-4	2.8E-3	1.6E-3	ND 2.7E-3	ND 3.8E-3	7.3E-4	ND 9.5E-4
methylene chloride	(H)	ND 1.2E-3	ND 6.2E-4	ND 6.4E-4	ND 1.3E-3	ND 1.2E-3	ND 1.1E-3	ND 1.5E-3	ND 1.1E-3	ND 3.2E-4
phenol	(H)	ND 4.5E-3	ND 2.9E-3	ND 2.8E-3	ND 6.1E-3	ND 5.5E-3	ND 4.3E-3	ND 6.1E-3	ND 4.6E-3	ND 1.6E-3
alpha-pinene		ND 3.8E-2	ND 2.0E-2	ND 2.0E-2	ND 4.3E-2	ND 3.9E-2	ND 3.5E-2	ND 4.7E-2	ND 3.5E-2	ND 1.0E-2
beta-pinene		ND 3.8E-2	ND 2.0E-2	ND 2.0E-2	ND 4.3E-2	ND 3.9E-2	ND 3.5E-2	ND 4.7E-2	ND 3.5E-2	ND 1.0E-2
propionaldehyde	(H)	ND 2.5E-3	ND 1.6E-3	ND 1.6E-3	ND 3.4E-3	ND 3.1E-3	ND 2.4E-3	ND 3.4E-3	ND 2.6E-3	ND 8.9E-4
styrene	(H)	ND 1.5E-3	ND 7.6E-4	ND 7.8E-4	ND 1.6E-3	ND 1.5E-3	ND 1.4E-3	ND 1.8E-3	ND 1.3E-3	ND 3.9E-4
toluene	(H)	ND 1.3E-3	ND 6.8E-4	ND 6.9E-4	ND 1.5E-3	ND 1.3E-3	ND 1.2E-3	ND 1.6E-3	ND 1.2E-3	ND 3.4E-4
1,2,4-trichlorobenzene	(H)	ND 2.5E-3	ND 1.3E-3	ND 1.4E-3	ND 2.9E-3	ND 2.6E-3	ND 2.4E-3	ND 3.2E-3	ND 2.3E-3	ND 6.8E-4
m,p-xylene	(H)	ND 1.5E-3	ND 7.8E-4	ND 8.0E-4	ND 1.7E-3	ND 1.5E-3	ND 1.4E-3	ND 1.8E-3	ND 1.4E-3	ND 4.0E-4
o-xylene	(H)	ND 1.5E-3	ND 7.8E-4	ND 8.0E-4	ND 1.7E-3	ND 1.5E-3	ND 1.4E-3	ND 1.8E-3	ND 1.4E-3	ND 4.0E-4
THC as Carbon		8.7E-2	7.5E-2	8.8E-3			6.7E-3	7.3E-3	3.7E-2	1.4E-3
Total HAPs		3.1E-3	8.1E-4	1.4E-3	8.6E-3	2.6E-3	1.1E-3	0.0E+0	2.5E-3	0.0E+0
Total Terpenes		0.0E+0	0.0E+0	0.0E+0	0.0E+0	0.0E+0	0.0E+0	0.0E+0	0.0E+0	0.0E+0

ND x.xEx = Below Detection Limit of x.xEx; H = CAA HAP; AI = Analytical Interference; ODTH = Oven Dried Tons per Hour; N = Not a HAP or VOC as defined by US EPA; MSF = 1000 square feet

Table 6.1.6. Summary of Radio Frequency Re-Dryer Emissions					
Analyte		Western Softwood Mill 112 lb/MSF 3/8"		Southern Softwood Mill 165 lb/MSF 3/8"	
acetaldehyde	(H)	ND	2.7E-4		2.9E-3
acetone	(N)		4.0E-4		1.4E-3
acrolein	(H)	ND	2.4E-4	ND	6.8E-4
benzene	(H)	ND	8.6E-5	ND	2.5E-4
bromomethane	(H)	ND	1.0E-4	ND	3.0E-4
camphene		ND	3.0E-3	ND	8.7E-3
3-carene		ND	3.0E-3	ND	8.7E-3
chloroethane	(H)	ND	7.1E-5	ND	2.1E-4
chloroethene	(H)	ND	6.9E-5	ND	2.0E-4
cumene	(H)	ND	2.6E-3	ND	7.7E-3
p-cymene		ND	2.9E-3	ND	8.6E-3
1,2-dichloroethane	(H)	ND	1.1E-4	ND	3.2E-4
cis-1,2-dichloroethylene		ND	1.1E-4	ND	3.1E-4
formaldehyde	(H)	ND	7.5E-5		6.5E-4
limonene		ND	3.0E-3		3.6E-3
p-mentha-1,5-diene		ND	3.0E-3	ND	8.7E-3
methanol	(H)		5.2E-4		4.8E-3
methyl ethyl ketone (MEK)	(H)	ND	3.0E-4	ND	8.6E-4
methyl isobutyl ketone	(H)	ND	2.9E-4	ND	8.2E-4
methylene chloride	(H)	ND	9.3E-5	ND	2.7E-4
phenol	(H)	ND	4.9E-4	ND	1.4E-3
alpha-pinene			1.1E-2		3.3E-1
beta-pinene		ND	3.0E-3		1.1E-1
propionaldehyde	(H)	ND	2.7E-4	ND	7.7E-4
styrene	(H)	ND	1.1E-4	ND	3.3E-4
toluene	(H)	ND	1.0E-4	ND	2.9E-4
1,2,4-trichlorobenzene	(H)	ND	2.0E-4	ND	5.8E-4
m,p-xylene	(H)	ND	1.2E-4	ND	3.4E-4
o-xylene	(H)	ND	1.2E-4	ND	3.4E-4
THC as Carbon			2.1E-2		4.9E-1
Total HAPs			5.2E-4		8.4E-3
Total Terpenes			1.1E-2		4.5E-1

ND x.xEx = Below Detection Limit of x.xEx; H = CAA HAP; AI = Analytical Interference; ODTH = Oven Dried Tons per Hour; N = Not a HAP or VOC as defined by US EPA; MSF = 1000 square feet

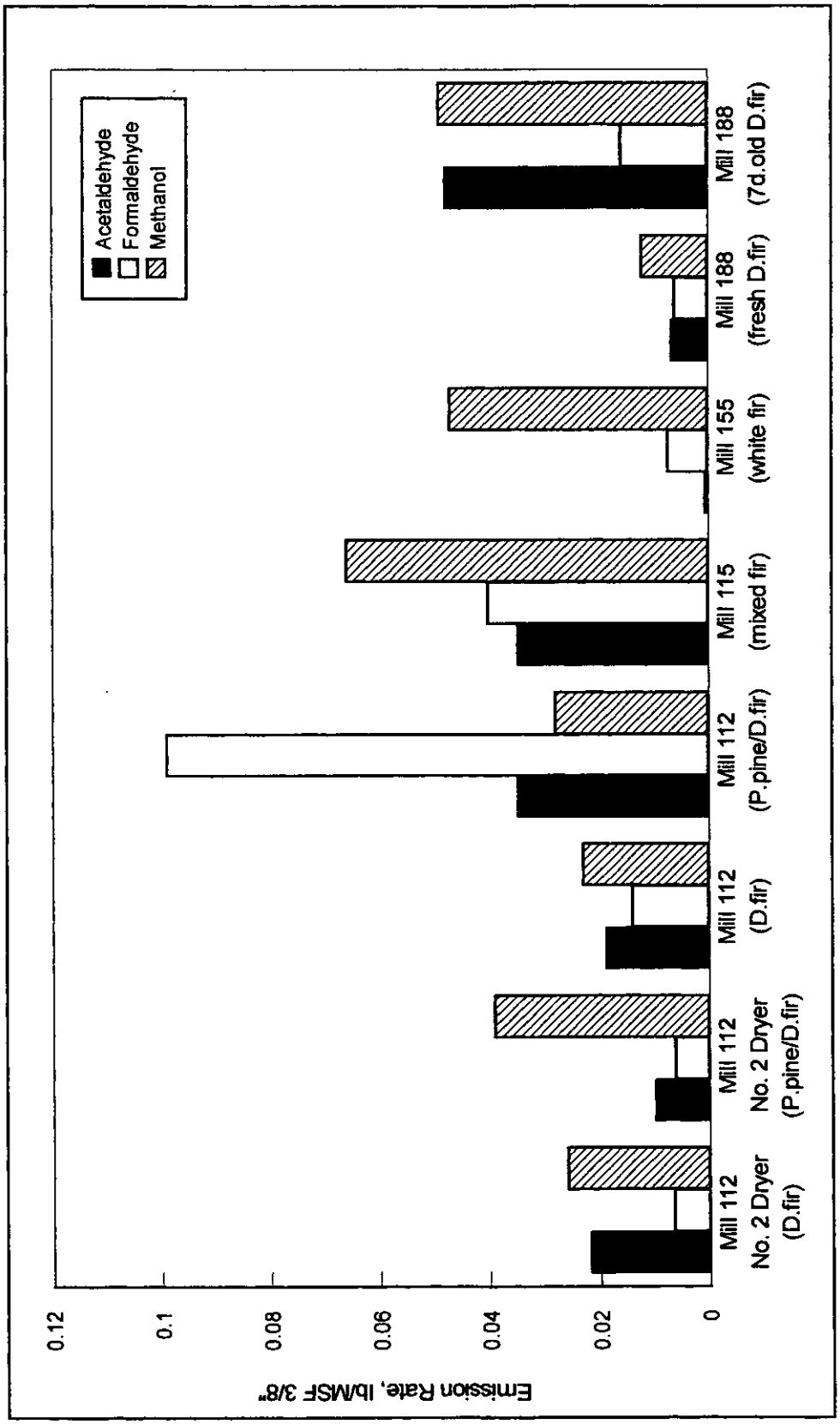

Figure 6.1.1 Acetaldehyde, Formaldehdye and Methanol Emissions from Western Softwood Veneer Dryer Heated Sections

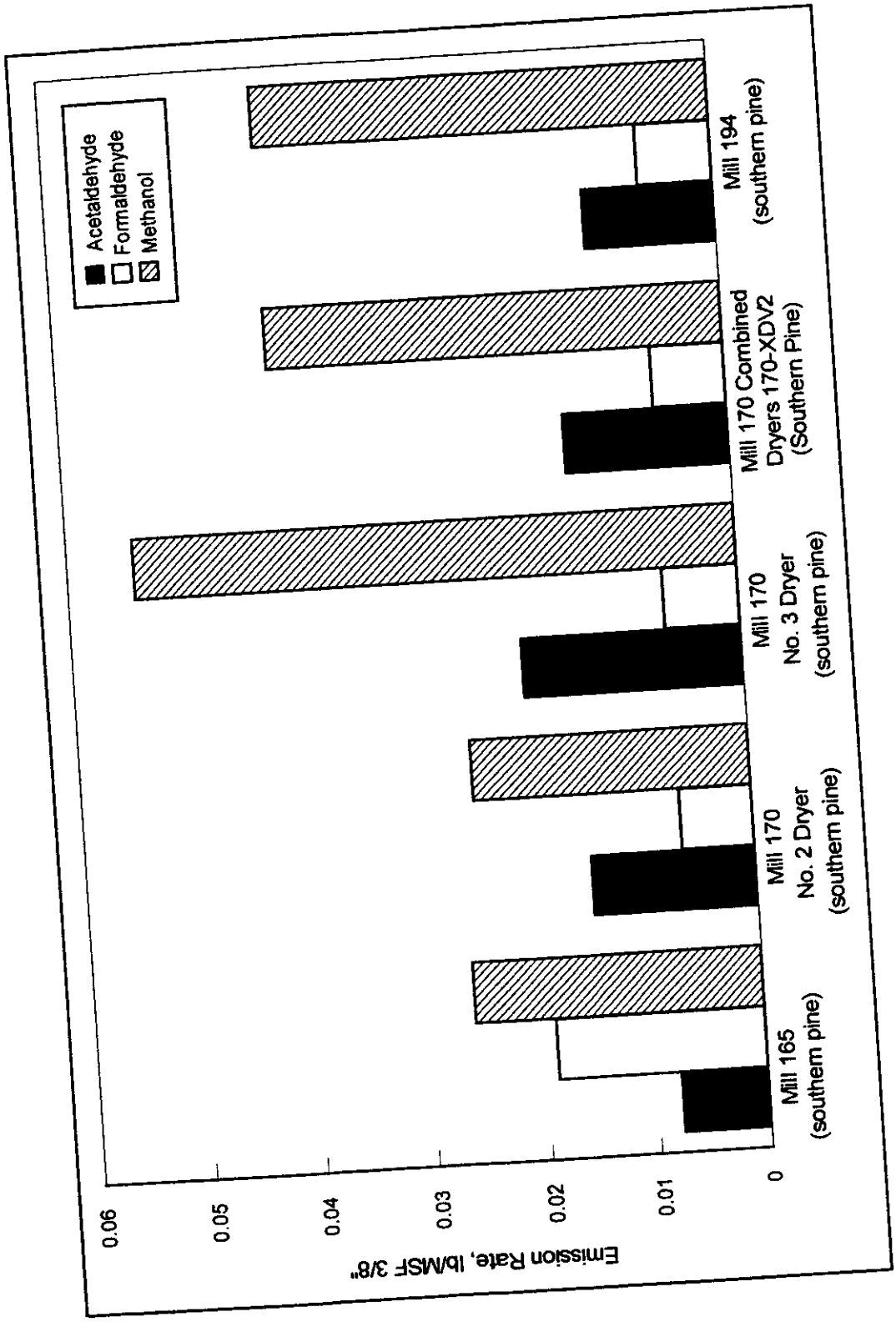

Figure 6.1.2 Acetaldehyde, Formaldehdye and Methanol Emissions from Steam Heated Southern Softwood Veneer Dryer Heated Sections

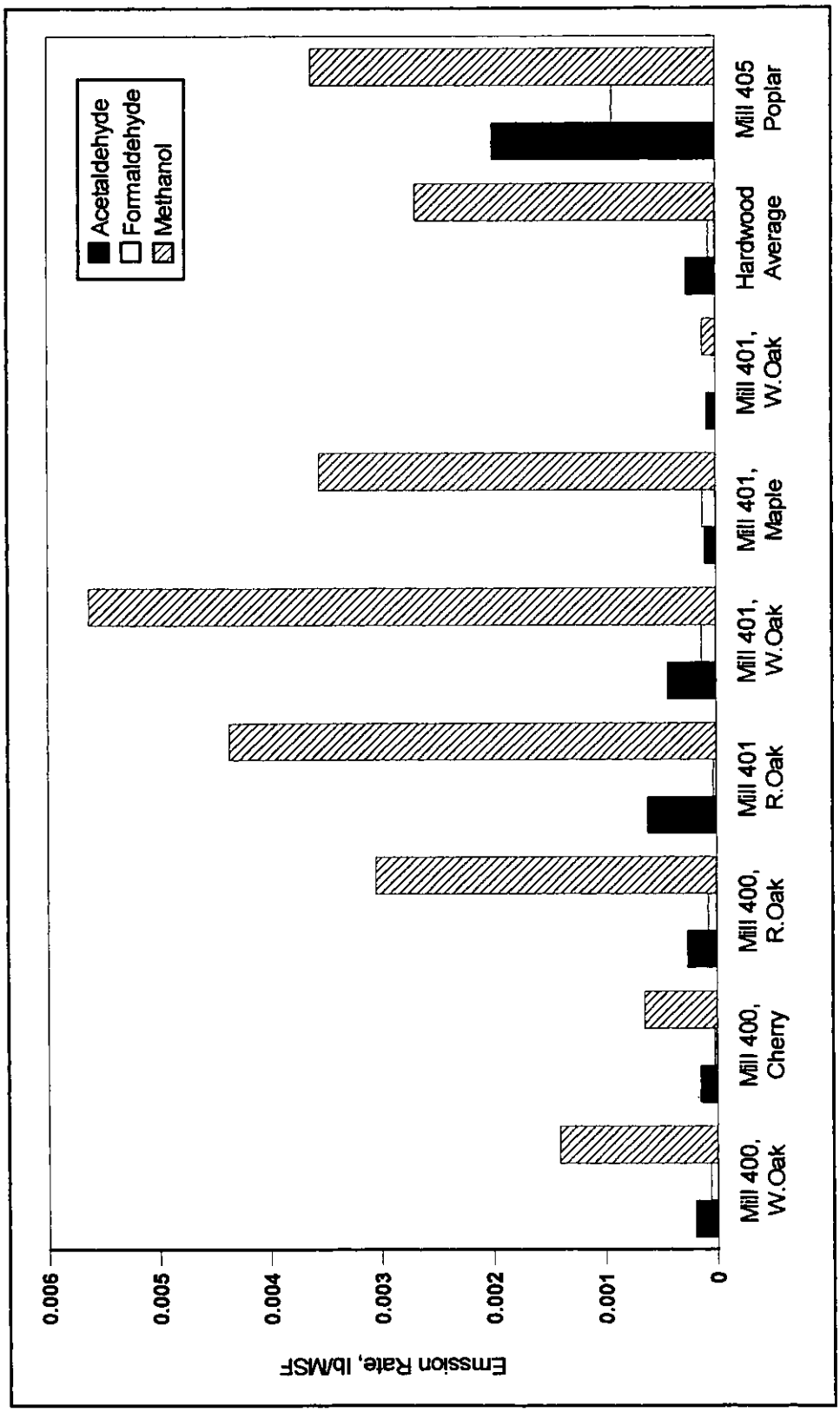

Figure 6.1.3 HAP Emissions from Hardwood Veneer Dryer Heated Sections

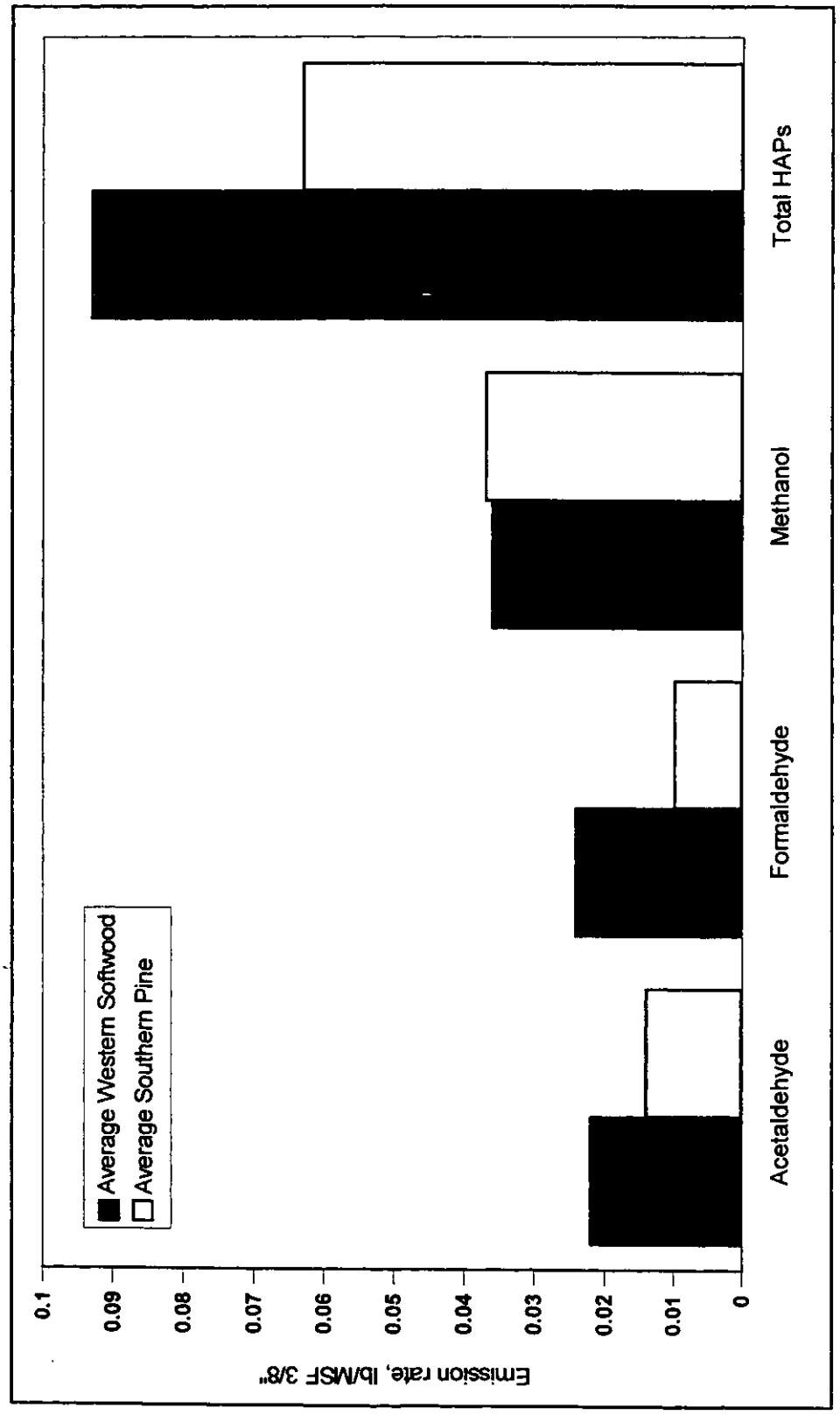

Figure 6.1.4 Comparison of Average HAP Emissions Between Heated Sections of Steam Heated Western and Southern Softwood Veneer Dryers

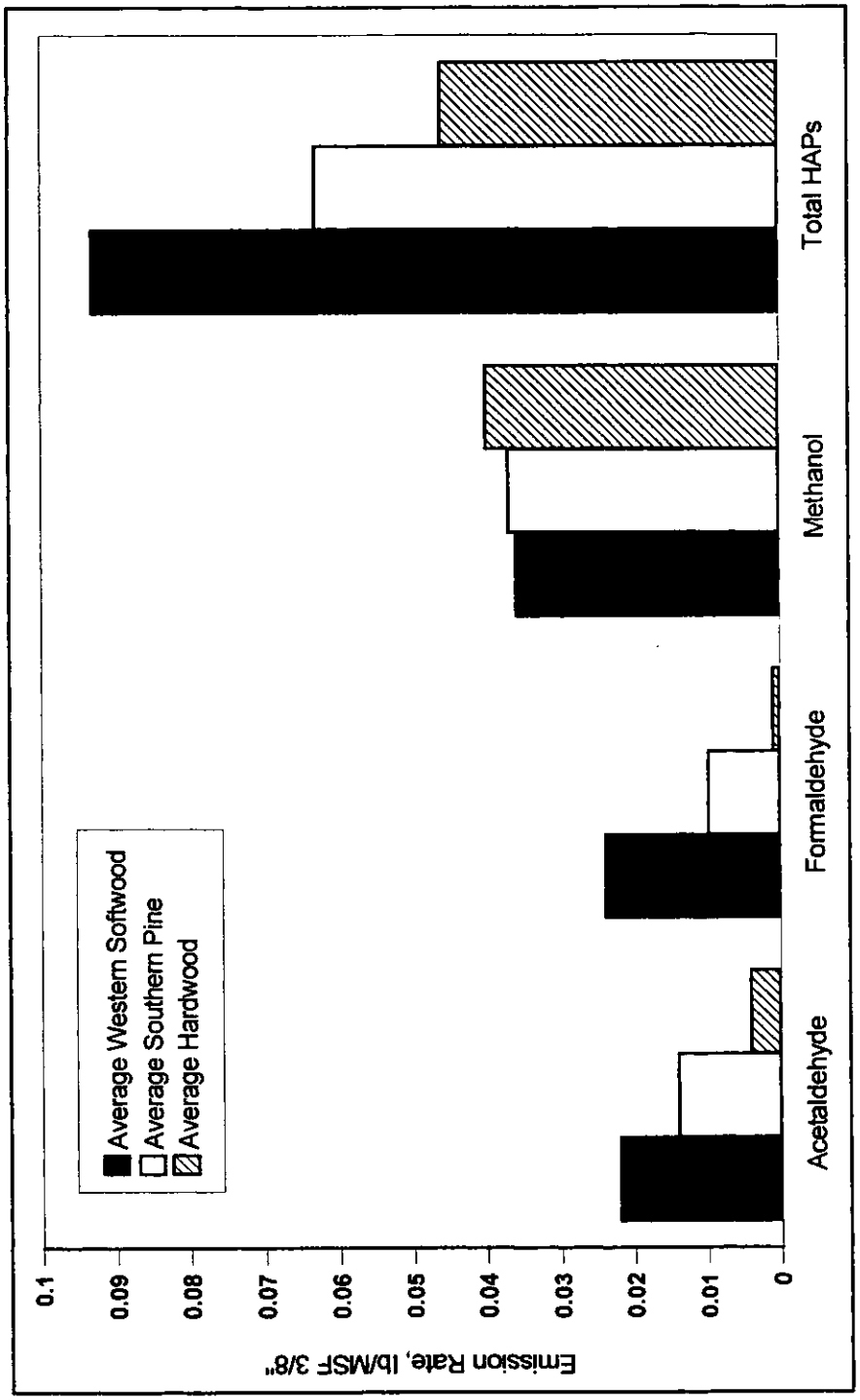

Figure 6.1.5 HAP Emissions, All Veneer Dryer Heated Zones

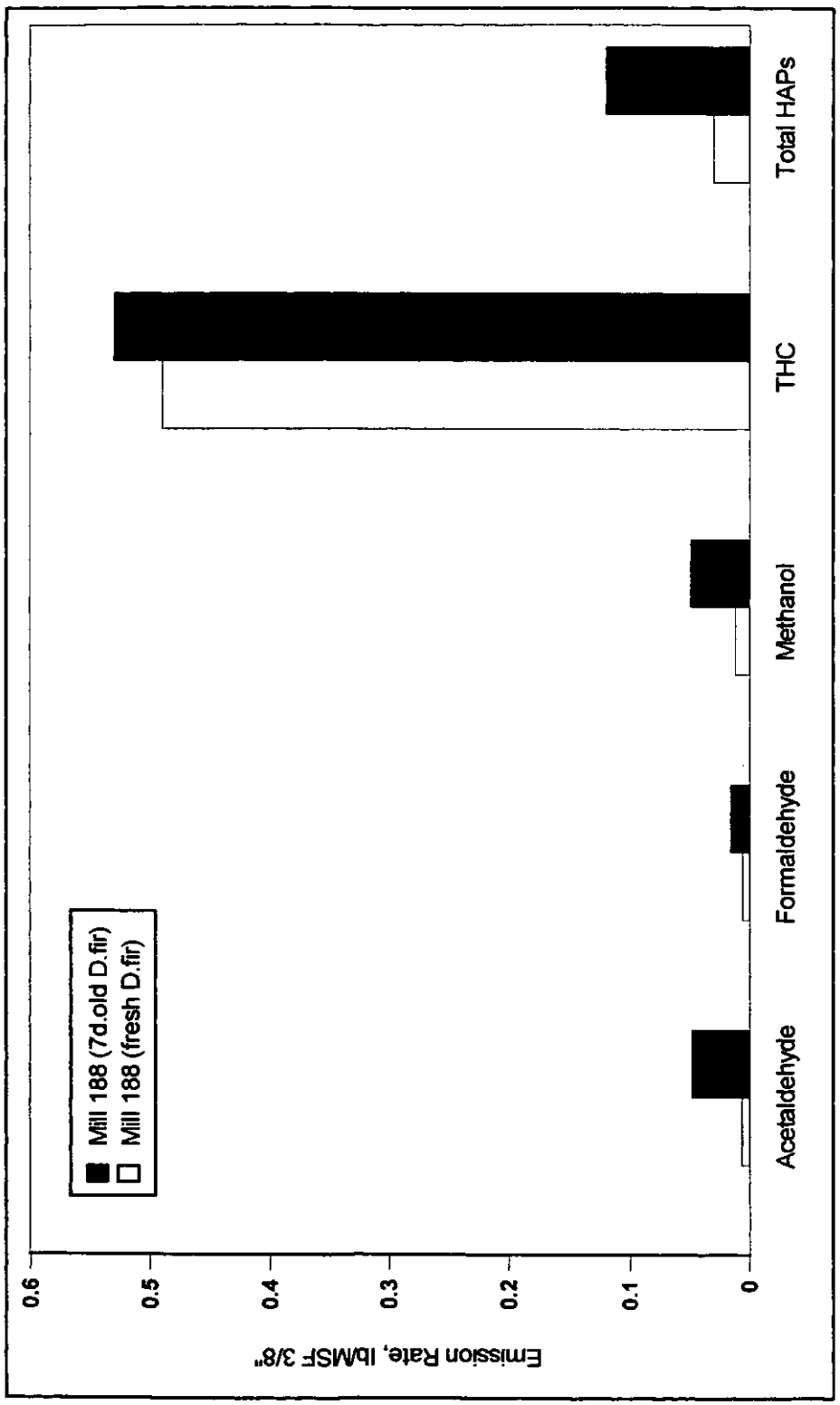

Figure 6.1.6 Effect of Douglas Fir Veneer Age on HAP Emissions from Veneer Dryer Heated Zones

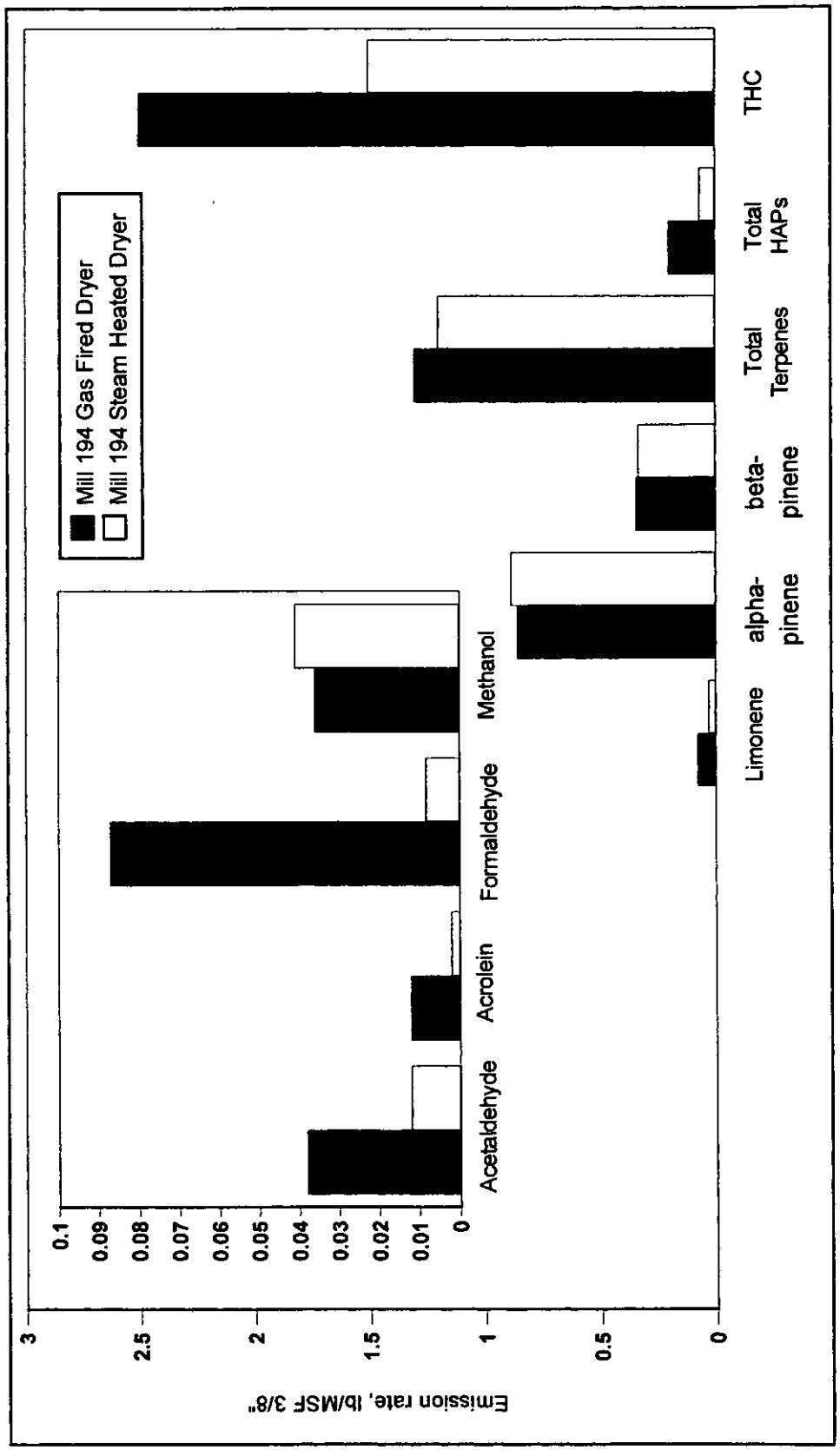

Figure 6.1.7 Steam Heated vs. Gas Fired Southern Pine Veneer Dryers Emissions

Table 4.8.2 provides the operating conditions for the steam-heated (2DV) and gas-fired (1DV) veneer dryers. These data show that the two dryers were not operating identically. The gas-fired and steam-heated dryers' green end temperatures were 430 and 380°F, respectively. Other parameters such as target outlet moisture, percent redry, and drying time also varied. NCASI Technical Bulletin No. 772, in this series, provides information indicating that higher HAP emissions may result from the higher dryer inlet temperatures, although the temperatures observed were generally above the temperatures in these veneer dryers.

Due to the variations in process conditions and general lack of experimental control, one cannot definitively link gas-firing or direct-firing to an increase in emissions of certain HAPs. On the other hand, this possibility is worthy of discussion. As compounds released from the drying veneer circulate within the dryer, they have an opportunity to pass through or near the combustion zone of the burner. Gases have direct contact with the burner flames. Here thermochemical processes could take place, resulting in formation of HAPs. Combustion in the gas-fired dryer's burner was not complete during testing as evidenced by an average methane value of 129 ppm in the dryer exhaust (Table 5.8.5) and an average carbon monoxide level of about 300 ppm. Incomplete combustion of methane can elevate formaldehyde emissions. Certain HAPs, specifically acetaldehyde, acrolein, formaldehyde, and benzene, measured in higher quantities in the direct-fired dryer, are known to be present in wood-fired boiler exhaust. Formaldehyde and benzenes are shown to increase in wood-fired boiler exhausts as carbon monoxide levels increase (Environmental Risk Limited and C.T. Donovan Associates, Inc. 1992). In this MACT study, benzene, styrene, toluene and the xylene isomers were found at levels above their detection limits primarily in the exhaust of direct-wood and direct-gas fired dryers (although there are a few exceptions). Finally, the one direct-wood-fired hardwood veneer dryer tested had higher acetaldehyde and formaldehyde emissions than the steam heated hardwood dryers, although again, the process conditions are considerably different. These items, taken cumulatively, indicate that the potential exits for higher HAP emissions from direct-fired veneer dryers. The extent to which direct-firing affects emissions, however, is likely a function of burner efficiency, dryer configuration, and other variables not considered in this study. For this reason, care must be taken in extrapolating these data to other direct fired units.

VOC emissions from softwood veneer dryer heated sections are illustrated in Figure 6.1.8. Western softwood veneer dryer heated zone emissions averaged 0.56 lb/MSF 3/8", and southern softwood steam heated dryer emissions averaged 2.8 lb/MSF 3/8". White fir had the lowest VOC emission rate, followed by Douglas-fir, ponderosa pine, and southern pine. These rates are consistent with the hypothesis that VOC emission rates are proportional to the terpene content of the wood veneer being dried.

HAP emissions from the veneer cooling section vents on the veneer dryers tested in this study are illustrated in Figures 6.1.9 and 6.1.10. Although there was significant variability in the results, average total HAP emissions were similar for western and southern softwood mills. Hardwood veneer cooling section vents also exhibited high variability, but the average total HAP emissions for these vents were almost double (on a lb/MSF 3/8" basis) those for softwood cooling sections. In Figure 6.1.11, the average HAP emissions for the veneer dryers and associated coolers are compared. Average total HAP emissions for the western and southern softwood veneer dryers are 15% to 25% of the heated zone emissions. Hardwood average veneer cooler HAP emissions, on the other hand, are almost equal to the heated zone emissions. There are a number of possible explanations for this difference in distribution of emissions between heated zones and cooler vents. For the softwood dryers and the Mill 405 hardwood dryer, which operates similar to the softwood dryers, the cooling section vent flow rates ranged from one to three times the flow rates from the associated dryers heated zones. For the hardwood veneer dryers at Mill 400 and 401 cooling section vent flows were 8

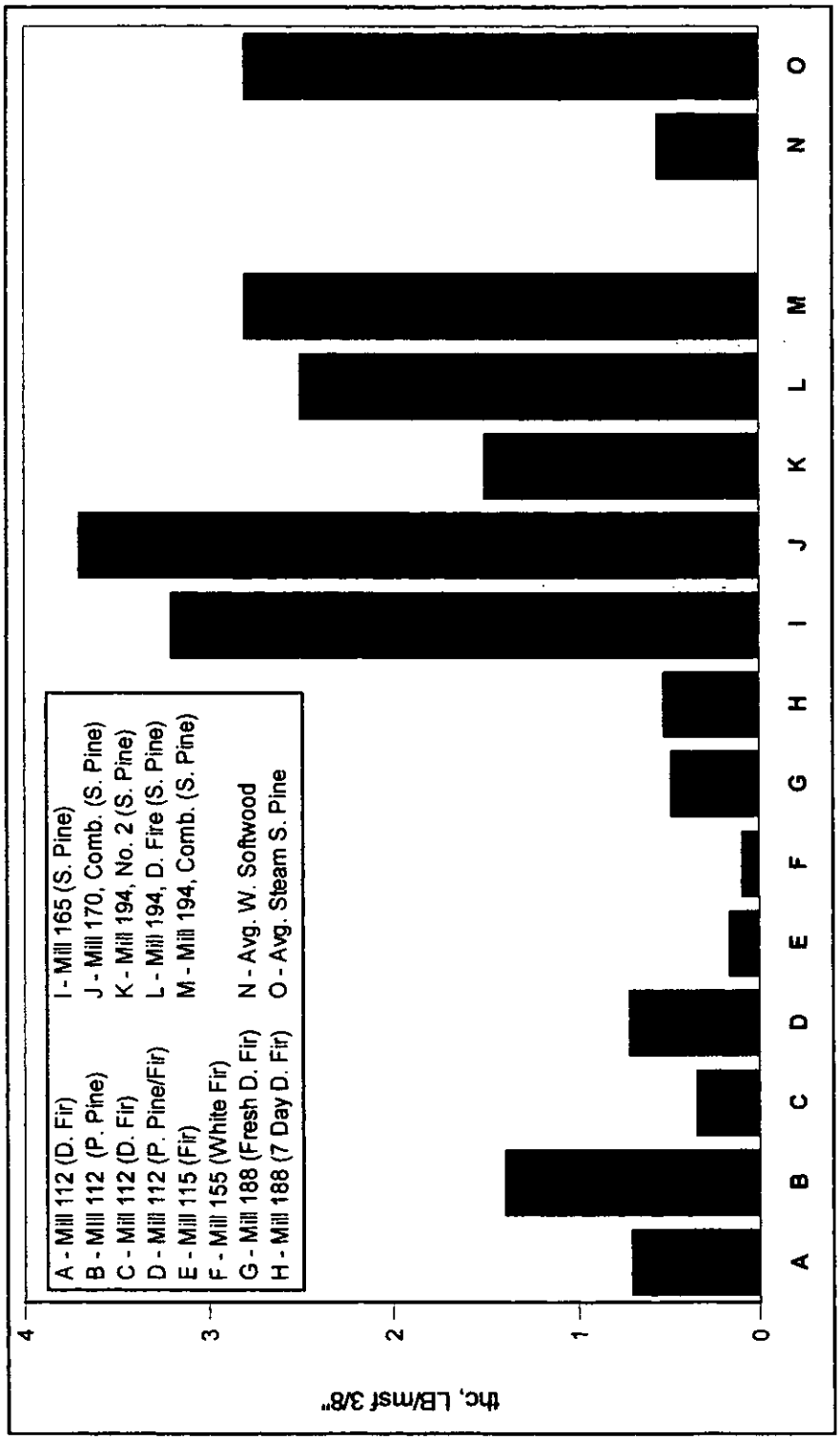

Figure 6.1.8 VOC Emissions from Softwood Veneer Dryer Heated Sections

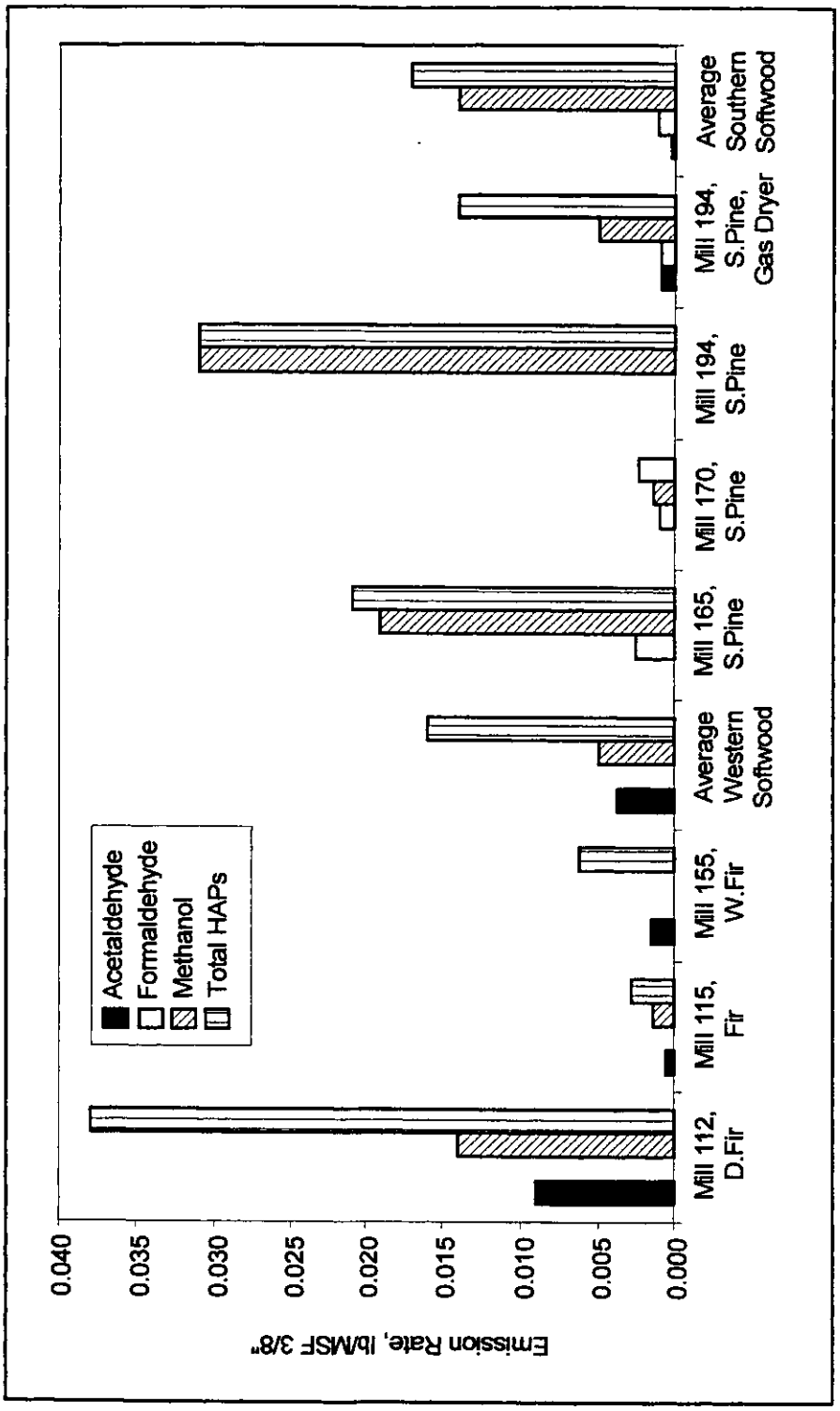

Figure 6.1.9 Softwood Veneer Cooling Section HAP Emissions

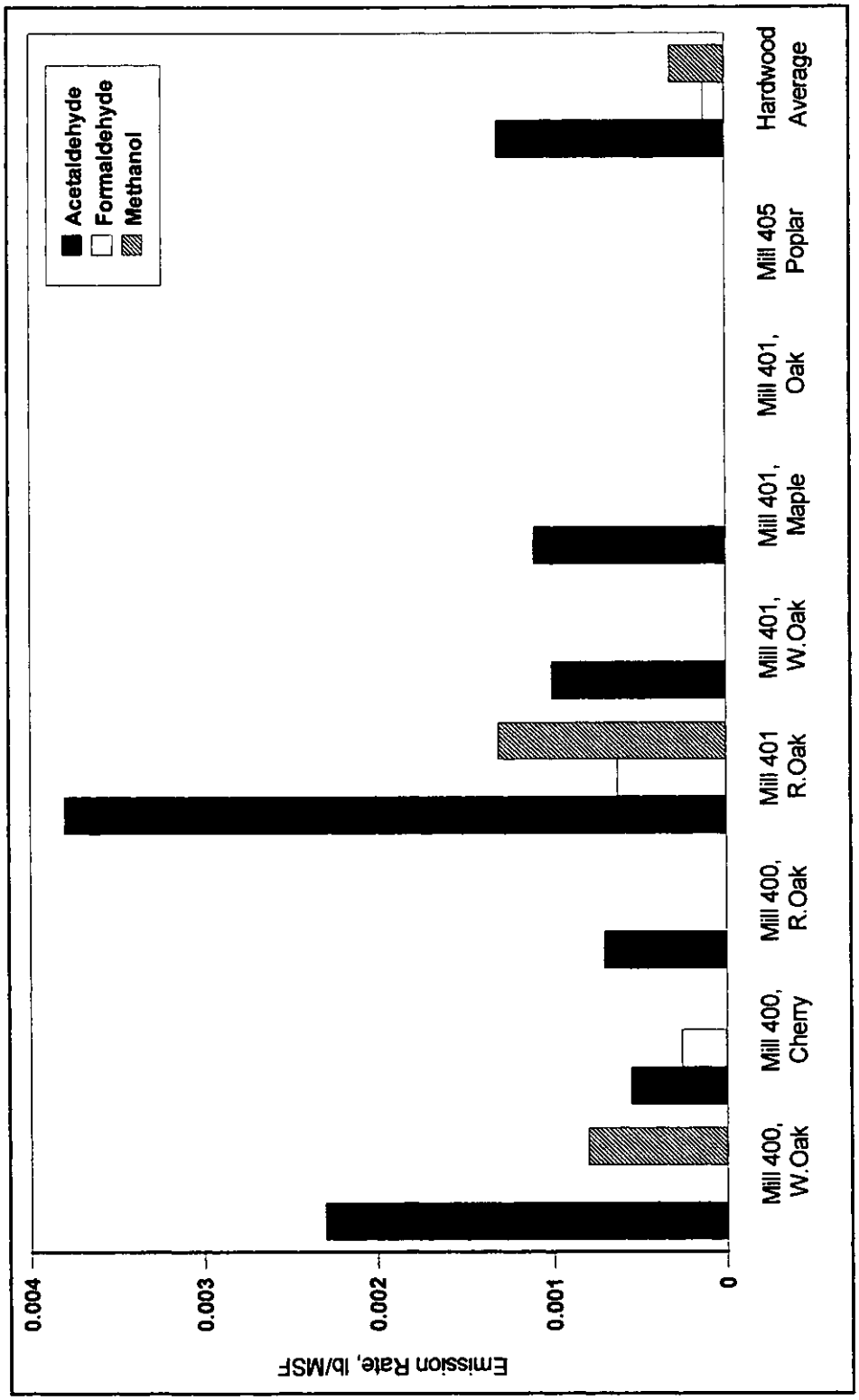

Figure 6.1.10 Hardwood Veneer Cooling Section HAP Emissions

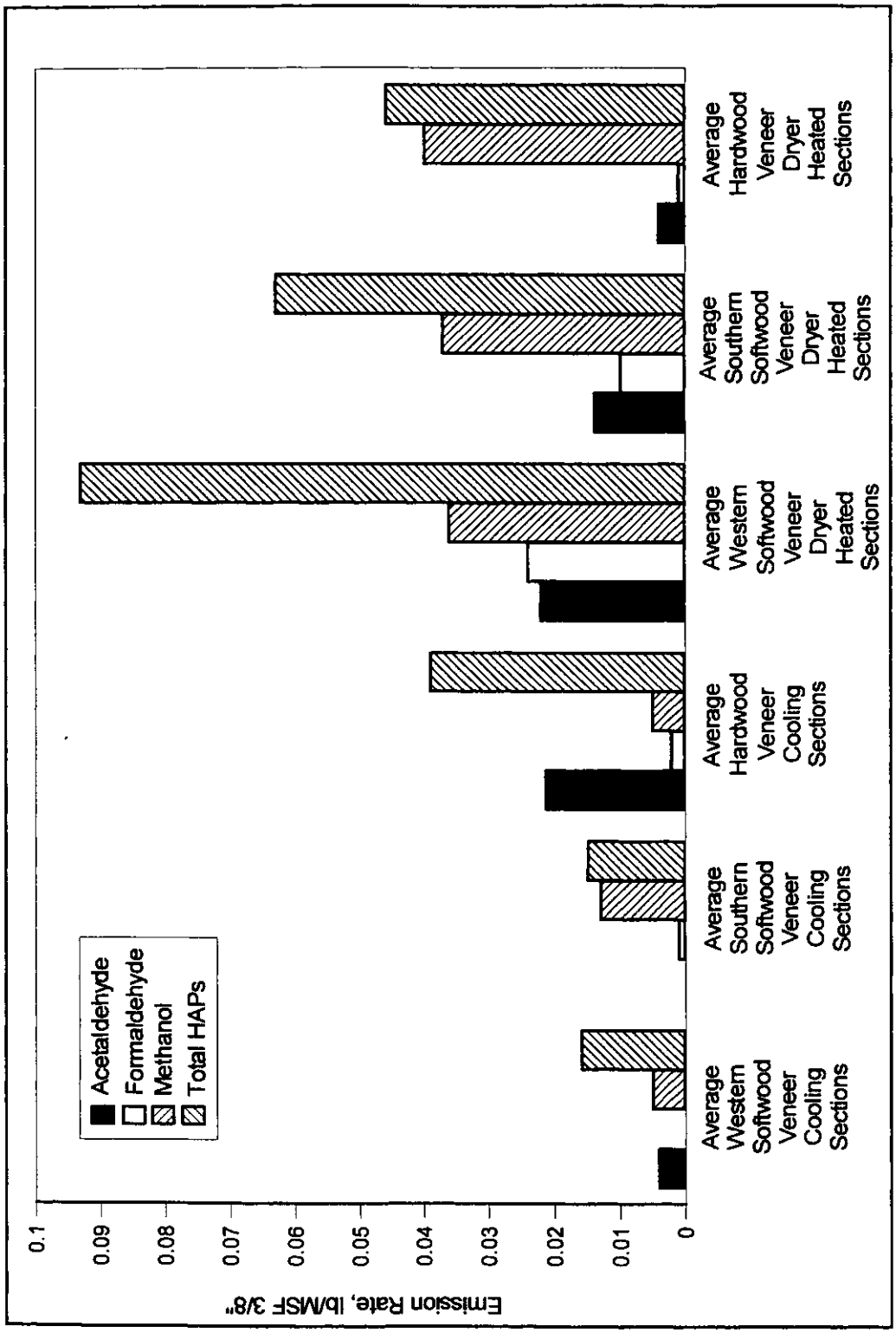

Figure 6.1.11 Average HAP Emissions from Heated and Cooling Sections of Veneer Dryers

to 20 times the heated zone flows. The hardwood veneer dryers at Mills 400 and 401 dried much thinner veneer at cooler temperatures than the softwood veneer dryers. Finally the relative abundance of individual organic compounds, compared to the total, was different for the heated and cooling sections.

Relative THC emissions for veneer dryers and cooling sections are illustrated in Figure 6.1.12. Average THC emissions for the western softwood veneer cooling sections are 12% of the emissions from the associated heated zones and the emission rate for southern softwood cooling sections is 1% of the rate from the associated veneer dryer heated zones. On the other hand, average THC emissions from hardwood veneer cooling sections exceed THC emissions from the heated sections. A more detailed comparison of THC emissions from hardwood veneer dryer heated zones and cooling sections is provided in Figure 6.1.13. This figure shows that the average distribution of THC emissions among heated and cooling sections is heavily influenced by the THC distribution from a single dryer at Mill 400. Thus, caution should be taken in extrapolation of the average data to individual dryers.

HAP and THC emission rates for the two RF dryers are provided in Table 6.1.6. Emission rates of total HAPs were very low as compared to veneer dryers. The THC emission rate was significantly higher for the southern pine redryer as compared to the western softwood unit, but THC emission rates for both redryers were small relative to the veneer dryers at these mills.

A number of different variables could affect the emission of volatile organic compounds from drying wood veneer. These can be grouped broadly into two categories, wood source related variables and process operation variables. Wood source related variables include wood species, veneer age, harvest season and the geographic area of wood harvest. During this investigation emissions from drying different wood species were shown to be different to some extent, particularly with respect to Method 25A VOCs. Only one set of tests was performed to examine the effects of veneer age. Equipment and operating variables that might affect volatile emissions include dryer type, dryer heat source, dryer temperature profile, dryer damper settings, dryer exit airflow, dryer tightness, and target veneer moistures. Process data were collected during sampling to assure normal operation of the sources tested, but given the complex nature of veneer dryer operations, the interdependence of process variables, and the relatively small number of dryers tested in this investigation, it was not possible to identify relationships between the process data and emission rates.

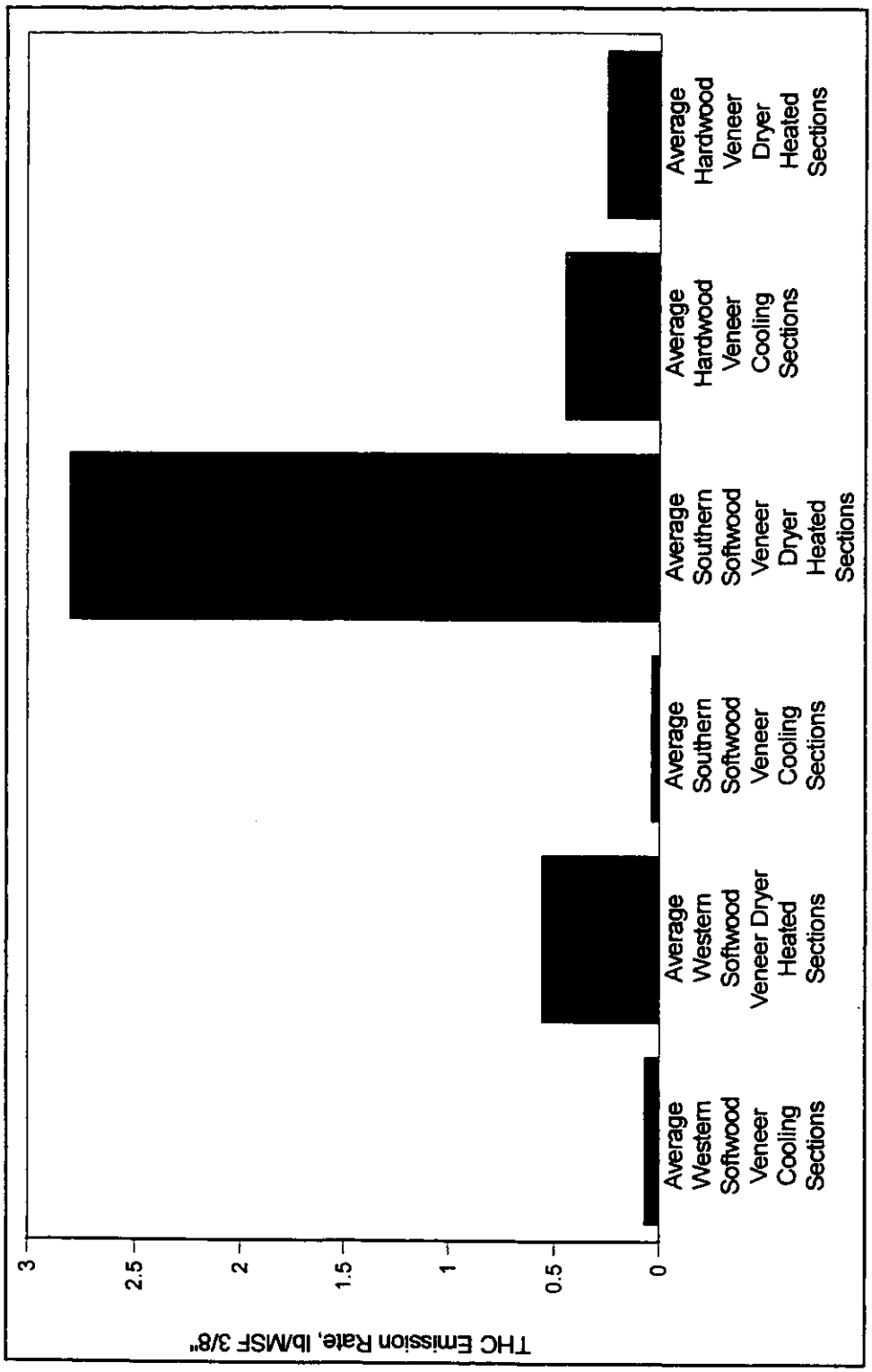

Figure 6.1.12 Average THC Emissions from Heated and Cooling Sections of Veneer Dryers

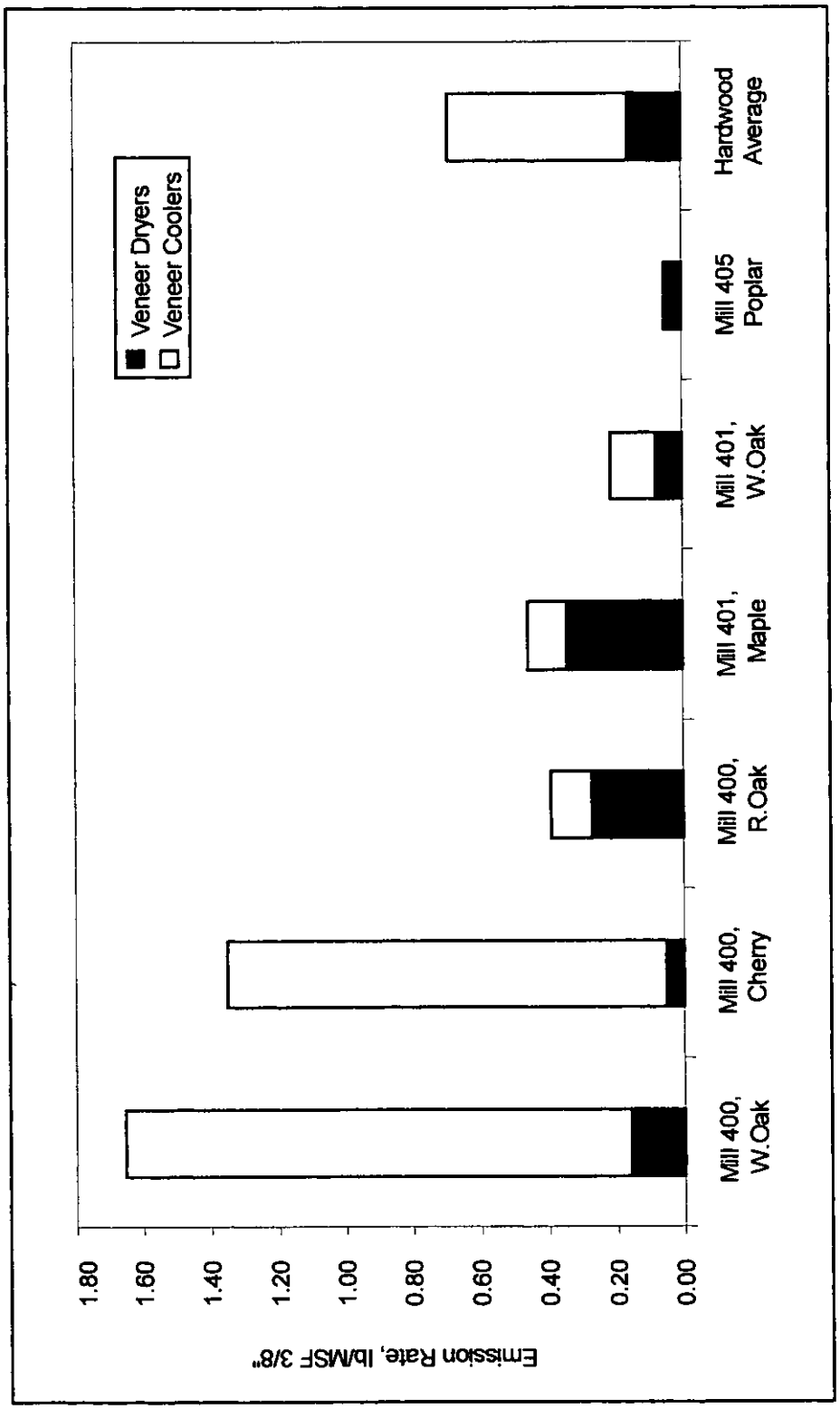

Figure 6.1.13 Comparison of Individual Hardwood Veneer Dryer Total THC Emissions

6.2 Plywood Press Emissions

Emissions tests on plywood hot presses are summarized in this section. Table 6.2.1 presents the results of tests on western softwood presses, Table 6.2.2 presents the results for southern softwood presses, and Table 6.2.3 presents the results for hardwood presses. Southern softwood presses had the highest average HAP emissions, with 0.19 lb/MSF 3/8". Western softwood and hardwood presses had HAP emissions of 0.045 lb/MSF 3/8"and 0.044 lb/MSF 3/8", respectively. Methanol accounted for over 95% of the HAP emissions from the softwood presses and over 70% of average HAP emissions from the hardwood presses. Formaldehyde accounted for 1% of the HAP emissions from southern softwood presses, 3% from western softwood presses and 8% of emissions from hardwood presses. Small amounts of acetaldehyde were found in all the southern softwood press vents, and one of the western softwood vents. Non-detect acetaldehyde values were observed in all the hardwood press vents.

Acetaldehyde, formaldehyde, methanol and total HAP emissions from the plywood presses tested are illustrated in Figure 6.2.1. Phenol-formaldehyde resins were used in the softwood plywood presses and urea-formaldehyde resins in the hardwood plywood presses. Methanol and formaldehyde are known to be present in both types of resins. Methanol and formaldehyde have also been measured in air emissions from hot pressing of wood chips without resin addition. (Carlson, 1995).

Factors that could affect emissions from plywood hot presses can be grouped into three broad categories. These are: (1) veneer related variables such as species, moisture content, veneer age, and season and geographic area of wood harvest; (2) resin-related factors such as resin solids usage rates, phenol and urea-formaldehyde mole ratios, and other resin formulation variations; and (3) process operating variables such as press temperature, pressure, cycle time, exhaust capture efficiency, and the number and thickness of plies in the plywood being manufactured.

Although it is reasonable to expect that all of the above listed variables would have some effect on emissions from hot presses, this study provides insufficient information to independently evaluate these variables. At best a few generalizations can be made. Relative to veneer related variables, the southern pine hot plywood presses had emissions distinct from the other presses in this study. Terpenes were present at detectable levels in the press exhausts of the southern presses as shown in Table 6.2.2 and Figure 6.2.2. VOC emissions from the southern presses were significantly higher than other presses tested; this difference primarily due to the presence of alpha- and beta-pinene. Tables 6.2.1 through 6.2.3 show average methanol emissions from southern pine presses to be significantly higher than average methanol emissions from other presses tested. Figure 6.2.1 shows that two southern presses are primarily responsible for the higher average emission rate. Due to small sample size and lack of information on the methanol content of the resins, one cannot attribute higher methanol to southern pine veneer used in these presses. Furthermore, although these data show southern pine presses to be higher emitters of methanol and total HAPs, that relationship might not hold true for larger data sets.

Although resin variables such as free-formaldehyde content or methanol content should affect press emissions, this study cannot provide relationships between these parameters and emission levels. Carefully controlled studies, not field studies such as this one, must be conducted to determine these relationships. Even then, relationships will be difficult to establish since the primary HAPs emitted from resins are also emitted from wood. Because of the proprietary nature of resin formulations, little resin information was provided for this report. Resin solids application rate was evaluated relative to HAP emissions and the results are shown in Figure 6.2.3. This figure shows considerable scatter in the data and lack of a predictive relationship.

Table 6.2.1. Summary of Western Softwood Plywood Press Emissions							
		Mill				Average Emissions	
		112		115			
Analyte		lb/MSF 3/8"		lb/MSF 3/8"		lb/MSF 3/8"	
acetaldehyde	(H)		7.2E-4	ND	5.0E-3		3.6E-4
acetone	(N)		3.2E-3		6.4E-3		4.8E-3
acrolein	(H)	ND	1.6E-3	ND	4.4E-3	ND	3.0E-3
benzene	(H)	ND	7.2E-4	ND	1.5E-3	ND	1.1E-3
bromomethane	(H)	ND	8.7E-4	ND	1.9E-3	ND	1.4E-3
camphene		ND	2.5E-2	ND	5.3E-2	ND	3.9E-2
3-carene		ND	2.5E-2	ND	5.3E-2	ND	3.9E-2
chloroethane	(H)	ND	5.9E-4	ND	1.3E-3	ND	9.3E-4
chloroethene	(H)	ND	5.7E-4	ND	1.2E-3	ND	9.0E-4
cumene	(H)	ND	2.2E-2	ND	4.7E-2	ND	3.5E-2
p-cymene		ND	2.5E-2	ND	5.3E-2	ND	3.9E-2
1,2-dichloroethane	(H)	ND	9.1E-4	ND	1.9E-3	ND	1.4E-3
cis-1,2-dichloroethylene		ND	8.9E-4	ND	1.9E-3	ND	1.4E-3
formaldehyde	(H)		2.2E-3	ND	1.4E-3		1.1E-3
limonene		ND	2.5E-2	ND	5.3E-2	ND	3.9E-2
p-mentha-1,5-diene		ND	2.5E-2	ND	5.3E-2	ND	3.9E-2
methanol	(H)		3.3E-2		5.3E-2		4.3E-2
methyl ethyl ketone (MEK)	(H)		6.6E-4	ND	5.5E-3		3.3E-4
methyl isobutyl ketone	(H)	ND	2.0E-3	ND	5.2E-3	ND	3.6E-3
methylene chloride	(H)	ND	7.8E-4	ND	1.7E-3	ND	1.2E-3
phenol	(H)	ND	3.3E-3	ND	8.9E-3	ND	6.1E-3
alpha-pinene		ND	2.5E-2	ND	5.3E-2	ND	3.9E-2
beta-pinene		ND	2.5E-2	ND	5.3E-2	ND	3.9E-2
propionaldehyde	(H)	ND	1.8E-3	ND	5.0E-3	ND	3.4E-3
styrene	(H)	ND	9.5E-4	ND	2.0E-3	ND	1.5E-3
toluene	(H)	ND	8.4E-4	ND	1.8E-3	ND	1.3E-3
1,2,4-trichlorobenzene	(H)	ND	1.7E-3	ND	3.5E-3	ND	2.6E-3
m,p-xylene	(H)	ND	9.7E-4	ND	2.1E-3	ND	1.5E-3
o-xylene	(H)	ND	9.7E-4	ND	2.1E-3	ND	1.5E-3
THC as Carbon			7.9E-2		4.2E-2		6.1E-2
Total HAPs			3.6E-2		5.3E-2		4.5E-2
Total Terpenes			0.0E+0		0.0E+0		0.0E+0

ND x.xEx = Below Detection Limit of x.xEx; H = CAA HAP; AI = Analytical Interference; ODTH = Oven Dried Tons per Hour; N = Not a HAP or VOC as defined by US EPA; MSF = 1000 square feet

Table 6.2.2. Summary of Southern Softwood Plywood Press Emissions

Analyte		Mill				Average Emissions lb/MSF 3/8"
		165 lb/MSF 3/8"	170 lb/MSF 3/8"	194 No. 1 Press lb/MSF 3/8"	194 No. 2 Press lb/MSF 3/8"	
acetaldehyde	(H)	3.6E-3	1.2E-2	6.1E-4	4.4E-3	5.1E-3
acetone	(N)	3.3E-3	1.6E-2	2.2E-3	8.3E-3	7.4E-3
acrolein	(H)	ND 1.0E-3	ND 1.6E-3	ND 7.5E-4	ND 3.9E-3	ND 1.8E-3
benzene	(H)	ND 4.2E-4	ND 5.9E-4	ND 3.3E-4	ND 1.6E-3	ND 7.2E-4
bromomethane	(H)	ND 5.1E-4	ND 7.2E-4	ND 4.0E-4	ND 1.9E-3	ND 8.8E-4
camphene		ND 1.5E-2	ND 2.1E-2	ND 1.2E-2	ND 5.4E-2	ND 2.5E-2
3-carene		ND 1.5E-2	ND 2.1E-2	ND 1.2E-2	ND 5.4E-2	ND 2.5E-2
chloroethane	(H)	ND 3.5E-4	ND 4.9E-4	ND 2.7E-4	ND 1.3E-3	ND 6.0E-4
chloroethene	(H)	ND 3.3E-4	ND 4.7E-4	ND 2.7E-4	ND 1.2E-3	ND 5.8E-4
cumene	(H)	ND 1.3E-2	ND 1.8E-2	ND 1.0E-2	ND 4.8E-2	ND 2.2E-2
p-cymene		ND 1.4E-2	ND 2.0E-2	ND 1.1E-2	ND 5.3E-2	ND 2.5E-2
1,2-dichloroethane	(H)	ND 5.3E-4	ND 7.5E-4	ND 4.2E-4	ND 2.0E-3	ND 9.2E-4
cis-1,2-dichloroethylene		ND 5.2E-4	ND 7.4E-4	ND 4.1E-4	ND 1.9E-3	ND 9.0E-4
formaldehyde	(H)	3.5E-4	3.8E-3	ND 1.8E-4	5.4E-3	2.4E-3
limonene		ND 1.5E-2	1.0E-2	ND 1.2E-2	ND 5.4E-2	2.5E-3
p-mentha-1,5-diene		ND 1.5E-2	ND 2.1E-2	ND 1.2E-2	ND 5.4E-2	ND 2.5E-2
methanol	(H)	9.8E-2	3.3E-1	6.0E-2	2.5E-1	1.8E-1
methyl ethyl ketone (MEK)	(H)	ND 1.3E-3	ND 2.0E-3	ND 9.5E-4	ND 4.9E-3	ND 2.3E-3
methyl isobutyl ketone	(H)	ND 1.3E-3	ND 1.9E-3	4.3E-4	ND 4.8E-3	1.1E-4
methylene chloride	(H)	ND 4.5E-4	ND 6.4E-4	ND 3.6E-4	ND 1.7E-3	ND 7.9E-4
phenol	(H)	ND 2.1E-3	1.1E-3	ND 1.5E-3	ND 7.9E-3	2.6E-4
alpha-pinene		1.6E-1	1.6E-1	5.0E-2	1.8E-1	1.4E-1
beta-pinene		5.2E-2	5.3E-2	1.8E-2	6.5E-2	4.7E-2
propionaldehyde	(H)	ND 1.2E-3	ND 1.8E-3	ND 8.5E-4	ND 4.4E-3	ND 2.0E-3
styrene	(H)	ND 5.6E-4	ND 7.9E-4	ND 4.4E-4	ND 2.1E-3	ND 9.7E-4
toluene	(H)	ND 4.9E-4	ND 7.0E-4	ND 3.9E-4	ND 1.8E-3	ND 8.5E-4
1,2,4-trichlorobenzene	(H)	ND 9.7E-4	ND 1.4E-3	ND 7.7E-4	ND 3.6E-3	ND 1.7E-3
m,p-xylene	(H)	ND 5.7E-4	ND 8.1E-4	ND 4.5E-4	ND 2.1E-3	ND 9.8E-4
o-xylene	(H)	ND 5.7E-4	ND 8.1E-4	ND 4.5E-4	ND 2.1E-3	ND 9.8E-4
THC as Carbon		3.2E-1	3.2E-1	1.1E-1	3.7E-1	2.8E-1
Total HAPs		1.0E-1	3.4E-1	6.2E-2	2.5E-1	1.9E-1
Total Terpenes		2.1E-1	2.2E-1	6.8E-2	2.4E-1	1.9E-1

ND x.xEx = Below Detection Limit of x.xEx; H = CAA HAP; AI = Analytical Interference; ODTH = Oven Dried Tons per Hour; N = Not a HAP or VOC as defined by US EPA; MSF = 1000 square feet

Table 6.2.3. Summary of Hardwood Plywood Press Emissions

Analyte		Mill 065 lb/MSF 3/8"	Mill 155 lb/MSF 3/8"	Mill 405 Press No. 1 lb/MSF 3/8"	Mill 405 Presses No. 2 and 3 lb/MSF 3/8"	Average Emissions lb/MSF 3/8"
acetaldehyde	(H)	ND 3.1E-3	ND 8.7E-3	ND 1.2E-2	ND 6.9E-3	ND 7.7E-3
acetone	(N)	4.2E-3	3.4E-2	4.3E-2	1.8E-2	2.5E-2
acrolein	(H)	ND 2.8E-3	ND 7.8E-3	ND 1.1E-2	ND 6.1E-3	ND 6.8E-3
benzene	(H)	ND 1.1E-3	ND 3.1E-3	ND 4.0E-3	ND 2.3E-3	ND 2.6E-3
bromomethane	(H)	ND 1.3E-3	ND 3.7E-3	ND 4.8E-3	ND 2.7E-3	ND 3.1E-3
camphene		ND 3.8E-2	ND 1.1E-1	ND 1.4E-1	ND 7.9E-2	ND 9.0E-2
3-carene		ND 3.8E-2	ND 1.1E-1	ND 1.4E-1	ND 7.9E-2	ND 9.0E-2
chloroethane	(H)	ND 9.0E-4	ND 2.5E-3	ND 3.3E-3	ND 1.9E-3	ND 2.1E-3
chloroethene	(H)	ND 8.7E-4	ND 2.5E-3	ND 3.2E-3	ND 1.8E-3	ND 2.1E-3
cumene	(H)	ND 3.4E-2	ND 9.4E-2	ND 1.2E-1	ND 6.9E-2	ND 8.0E-2
p-cymene		ND 3.7E-2	ND 1.1E-1	ND 1.4E-1	ND 7.7E-2	ND 8.9E-2
1,2-dichloroethane	(H)	ND 1.4E-3	ND 3.9E-3	ND 5.0E-3	ND 2.9E-3	ND 3.3E-3
cis-1,2-dichloroethylene		ND 1.4E-3	ND 3.8E-3	ND 4.9E-3	ND 2.8E-3	ND 3.2E-3
formaldehyde	(H)	8.8E-3	3.8E-3	ND 2.6E-3	4.8E-3	4.4E-3
limonene		ND 3.8E-2	ND 1.1E-1	ND 1.4E-1	ND 7.9E-2	ND 9.0E-2
p-mentha-1,5-diene		ND 3.8E-2	ND 1.1E-1	ND 1.4E-1	ND 7.9E-2	ND 9.0E-2
methanol	(H)	6.7E-2	3.0E-2	1.6E-2	1.4E-2	3.2E-2
methyl ethyl ketone (MEK)	(H)	ND 3.5E-3	ND 9.8E-3	ND 1.3E-2	ND 7.7E-3	ND 8.6E-3
methyl isobutyl ketone	(H)	ND 3.4E-3	7.9E-3	ND 1.3E-2	ND 7.4E-3	2.0E-3
methylene chloride	(H)	ND 1.2E-3	ND 3.3E-3	ND 4.3E-3	ND 2.5E-3	ND 2.8E-3
phenol	(H)	8.3E-3	ND 1.6E-2	ND 2.2E-2	1.6E-2	6.1E-3
alpha-pinene		ND 3.8E-2	ND 1.1E-1	ND 1.4E-1	ND 7.9E-2	ND 9.0E-2
beta-pinene		ND 3.8E-2	ND 1.1E-1	ND 1.4E-1	ND 7.9E-2	ND 9.0E-2
propionaldehyde	(H)	ND 3.1E-3	ND 8.8E-3	ND 1.2E-2	ND 6.9E-3	ND 7.7E-3
styrene	(H)	ND 1.5E-3	ND 4.1E-3	ND 5.3E-3	ND 3.0E-3	ND 3.5E-3
toluene	(H)	ND 1.3E-3	ND 3.6E-3	ND 4.7E-3	ND 2.7E-3	ND 3.1E-3
1,2,4-trichlorobenzene	(H)	ND 2.5E-3	ND 7.1E-3	ND 9.2E-3	ND 5.2E-3	ND 6.0E-3
m,p-xylene	(H)	ND 1.5E-3	ND 4.2E-3	ND 5.4E-3	ND 3.1E-3	ND 3.5E-3
o-xylene	(H)	ND 1.5E-3	ND 4.2E-3	ND 5.4E-3	ND 3.1E-3	ND 3.5E-3
THC as Carbon		7.1E-2	4.8E-2	8.8E-2	5.7E-2	6.6E-2
Total HAPs		8.5E-2	4.2E-2	1.6E-2	3.5E-2	4.4E-2
Total Terpenes		0.0E+0	0.0E+0	0.0E+0	0.0E+0	0.0E+0

ND x.xEx = Below Detection Limit of x.xEx; H = CAA HAP; AI = Analytical Interference; ODTH = Oven Dried Tons per Hour; N = Not a HAP or VOC as defined by US EPA; MSF = 1000 square feet

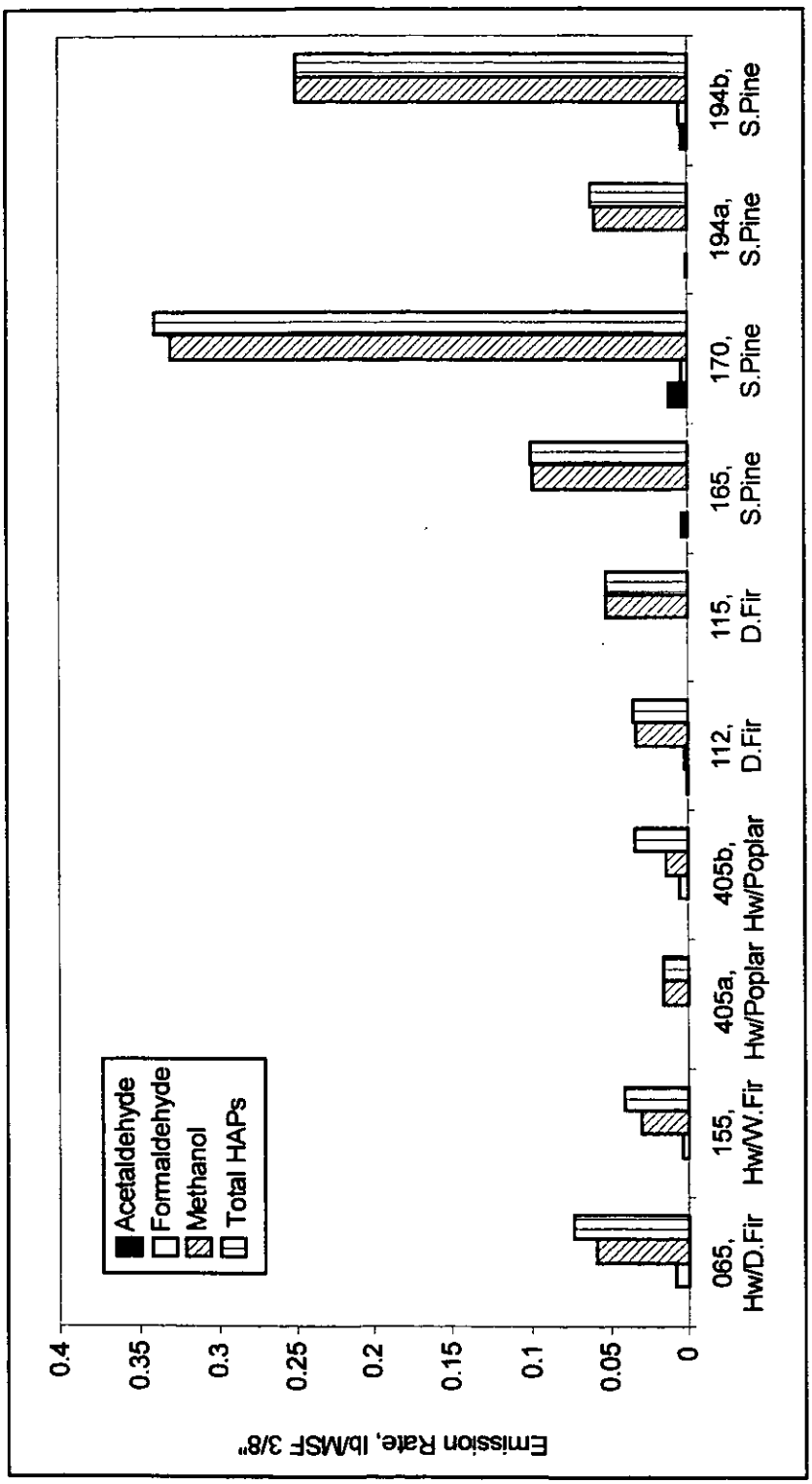

Figure 6.2.1 Press Acetaldehyde, Formaldehyde, Methanol and Total HAP Emissions

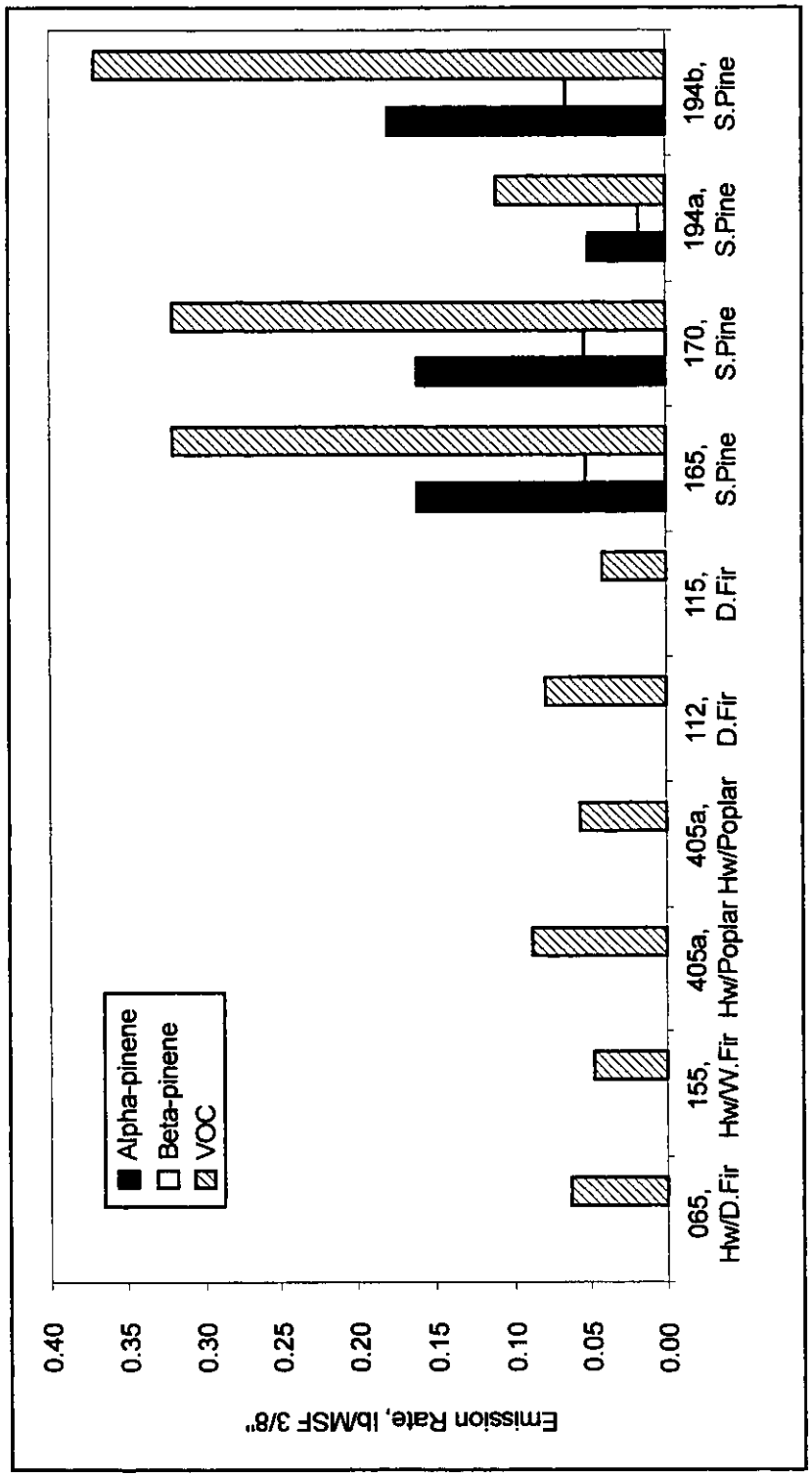

Figure 6.2.2 Press Terpene and THC Emissions

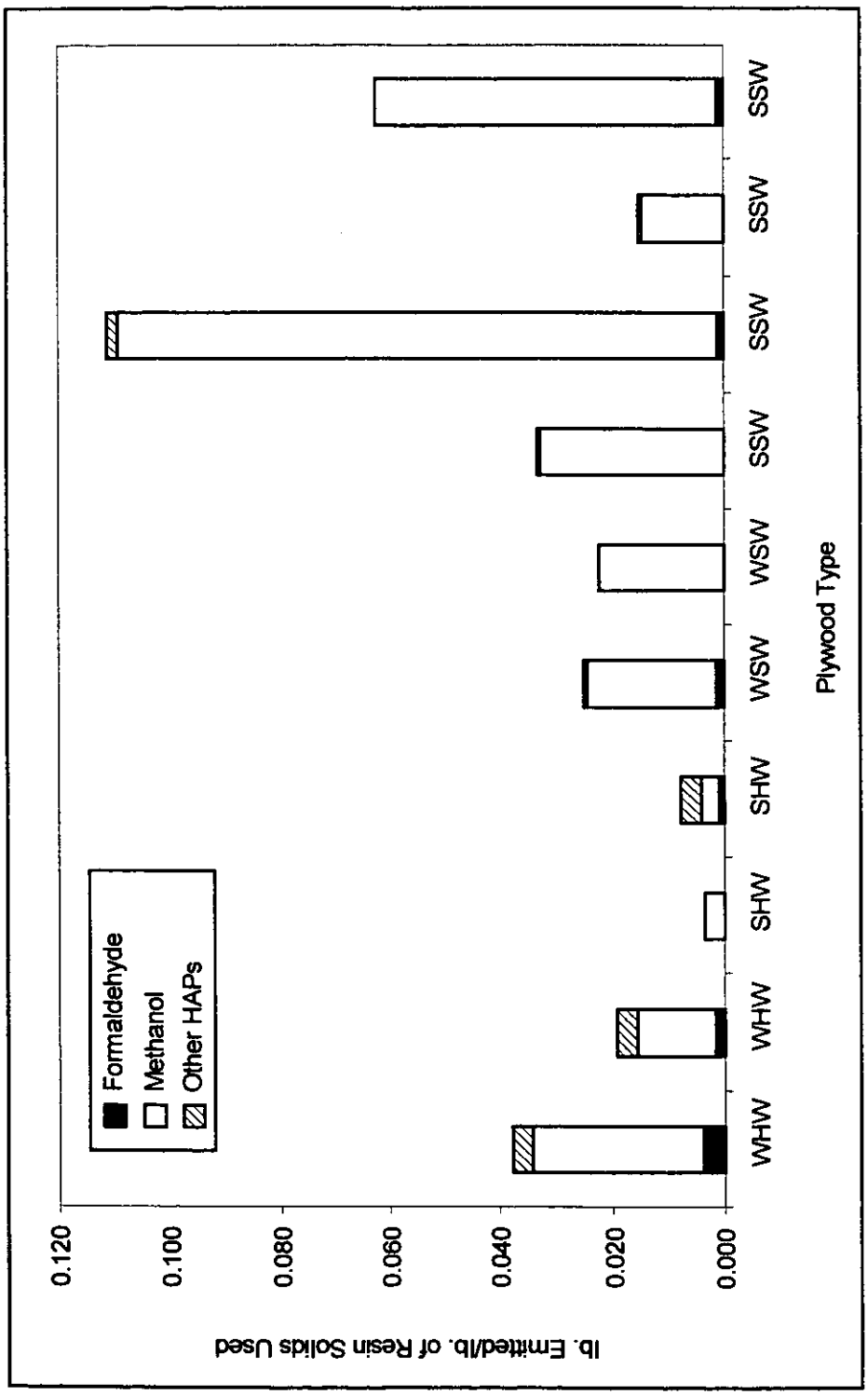

Figure 6.2.3 Press HAP Emissions per lb. of Resin Applied

Reasonably detailed press operational information was gathered. However, press temperatures, pressures, and cycle times did not seem to vary widely within source subcategories and did not explain observed differences in emission rates. Two operational issues surfaced during this testing that deserve some discussion. One issue involves press emission capture by convection vents and the other involves fugitive emissions from veneer dryers and their impact on press testing. Two presses were tested at Mill 194. Both were operating in a similar manner. However the press vent for press no. 1 (labeled 194a in Figure 6.2.2) was convective and the press vent for press no. 2 (labeled 194b) was powered. Flow rates for the two press vents varied considerably as did the total VOC and HAP emissions. It seems that although the no. 1 press emissions appeared visually to be captured by the convective vent, they were only partially captured. Further complications arose from the potential for fugitive dryer emissions to have been captured by press no. 2, which operated in closer proximity to the veneer dryers. This issue also arose at mill 170 where a temporary enclosure was built around one of the presses. At this mill a relatively large fan was installed to pull emissions from the temporary enclosure. Since the press was in the same building as the veneer dryers, it is likely that some fugitive emissions from the veneer dryers were included in the press sample.

6.3 Discussion of Miscellaneous Source Emissions Test Results

The results of emissions tests at six plywood mill miscellaneous sources are summarized in Table 6.3.1. These sources were: a log steaming vat, a veneer dry chipper, a panel dry trim chipper, a sander, a saw, and a combined dust baghouse vent. Since the number, type and configuration of these miscellaneous sources varies from mill to mill, one useful way of viewing emissions from these sources is to compare them with emissions from dryers and presses at the same facilities. This is done in Tables 6.3.2 through 6.3.5. To compare these emissions, however, the production rates of the sources must be in the same terms. In the case of these miscellaneous sources, the emission rates have been converted to pounds of analyte emitted per thousand square feet (3/8" basis) of plywood produced by the mill. In some cases, estimates were made that allowed the miscellaneous source production rates to be converted to the appropriate units.

The log steaming vat tested at Mill 112 was sampled while a mix of Douglas-fir and larch logs was being conditioned. Total HAP emissions from this source were approximately 9% of the sum of the uncontrolled veneer dryer and press HAP emissions at the mill, as indicated in Table 6.3.2. Terpene emissions from the log vats equaled 11 to 43% of the dryer heated zone terpene emissions at this mill.

The veneer and panel dry trim chipper were tested at Mill 165 while processing southern pine. Total HAP emissions from these sources were approximately 10% of the sum of the uncontrolled veneer dryer and press emissions at that mill. VOC emissions from these vents averaged 3% of the sum of the veneer dryer and press VOCs. A comparison of the emissions from these chipper vents to the total uncontrolled veneer dryer and press emissions is included in Table 6.3.3.

The sander baghouse and skinner saw outlet vents tested at Mill 170 were tested while processing southern pine furnish. Total HAP emissions from these two sources were approximately 7% of the sum of the uncontrolled veneer dryer and press emissions at that mill. VOC emissions from these vents averaged 5% of the sum of the uncontrolled veneer dryer and press VOCs. A comparison of the saw and sander emissions to the total uncontrolled veneer dryer and press emissions is included as Table 6.3.4.

The sander and trim saw at Mill 405 were sampled with a mix of white maple and southern birch face stock and yellow poplar core furnish. Total HAP emissions from these two sources were approximately 5% of the sum of the veneer dryer and press emissions. VOC emissions from these vents averaged 13% of the sum of veneer dryer and press VOCs. A comparison of the sander and saw emissions to the total veneer dryer and press emissions is included in Table 6.3.5.

Table 6.3.1. Miscellaneous Source Emissions at Plywood Mills

Analyte		Log Steaming Vat Exhaust (112-1ML1) lb/MSF 3/8"	Veneer Dry Chipper Cyclone Exhuast (165-1WD1) lb/MSF 3/8"	Panel Dry Trim Chipper Cyclone Exhaust (165-1WR1) lb/MSF 3/8"	Sander Baghouse Vent (170-1SD1) lb/MSF 3/8"	Skinner Saw Outlet (170-XMW1) lb/MSF 3/8"	Combined Dust Baghouse Vent (405-1SI1) lb/MSF 3/8"
acetaldehyde	(H)	4.7E-3	4.3E-4	ND 1.6E-3	2.1E-3	4.3E-4	ND 3.4E-3
acetone	(N)	3.0E-3	4.3E-4	ND 1.6E-3	4.7E-3	1.9E-3	8.9E-3
acrolein	(H)	ND 7.6E-4	ND 1.0E-3	ND 1.4E-3	ND 2.2E-3	ND 1.2E-3	ND 3.0E-3
benzene	(H)	ND 2.8E-4	ND 4.1E-4	ND 5.5E-4	ND 8.6E-4	ND 4.9E-4	ND 1.0E-3
bromomethane	(H)	ND 3.4E-4	ND 4.9E-4	ND 6.7E-4	ND 1.0E-3	ND 5.9E-4	ND 1.3E-3
camphene		ND 9.8E-3	ND 1.4E-2	ND 1.9E-2	ND 3.0E-2	ND 1.7E-2	ND 3.6E-2
3-carene		ND 9.8E-3	ND 1.4E-2	ND 1.9E-2	ND 3.0E-2	ND 1.7E-2	ND 3.6E-2
chloroethane	(H)	ND 2.3E-4	ND 3.3E-4	ND 4.6E-4	ND 7.1E-4	ND 4.0E-4	ND 8.6E-4
chloroethene	(H)	ND 2.3E-4	ND 3.2E-4	ND 4.4E-4	ND 6.8E-4	ND 3.9E-4	ND 8.3E-4
cumene	(H)	ND 8.7E-3	ND 1.2E-2	ND 1.7E-2	ND 2.6E-2	ND 1.5E-2	ND 3.2E-2
p-cymene		ND 9.7E-3	ND 1.4E-2	ND 1.9E-2	ND 2.9E-2	ND 1.7E-2	ND 3.6E-2
1,2-dichloroethane	(H)	ND 3.6E-4	ND 5.1E-4	ND 7.0E-4	ND 1.1E-3	ND 6.2E-4	ND 1.3E-3
cis-1,2-dichloroethylene		ND 3.5E-4	ND 5.0E-4	ND 6.9E-4	ND 1.1E-3	ND 6.1E-4	ND 1.3E-3
formaldehyde	(H)	ND 2.3E-4	2.4E-4	ND 4.2E-4	1.8E-3	2.7E-4	ND 8.7E-4
limonene		ND 9.8E-3	ND 1.4E-2	ND 1.9E-2	ND 3.0E-2	ND 1.7E-2	ND 3.6E-2
p-mentha-1,5-diene		ND 9.8E-3	ND 1.4E-2	ND 1.9E-2	ND 3.0E-2	ND 1.7E-2	ND 3.6E-2
methanol	(H)	7.3E-3	8.7E-3	7.5E-3	1.2E-2	1.2E-2	1.7E-3
methyl ethyl ketone (MEK)	(H)	ND 9.6E-4	ND 1.3E-3	ND 1.8E-3	ND 2.7E-3	ND 1.6E-3	ND 3.8E-3
methyl isobutyl ketone	(H)	ND 9.2E-4	ND 1.2E-3	ND 1.7E-3	ND 2.7E-3	ND 1.5E-3	ND 3.6E-3
methylene chloride	(H)	ND 3.1E-4	ND 4.4E-4	ND 6.0E-4	ND 9.3E-4	ND 5.3E-4	ND 1.1E-3
phenol	(H)	ND 1.5E-3	1.5E-3	ND 2.9E-3	ND 4.4E-3	ND 2.5E-3	ND 6.2E-3
alpha-pinene		5.6E-2	3.2E-2	3.6E-2	1.2E-2	2.7E-2	ND 3.6E-2
beta-pinene		3.0E-3	ND 1.4E-2	ND 1.9E-2	ND 3.0E-2	ND 1.7E-2	ND 3.6E-2
propionaldehyde	(H)	ND 8.6E-4	ND 1.1E-3	ND 1.6E-3	ND 2.5E-3	ND 1.4E-3	ND 3.4E-3
styrene	(H)	ND 3.8E-4	ND 5.4E-4	ND 7.4E-4	ND 1.1E-3	ND 6.5E-4	ND 1.4E-3
toluene	(H)	ND 3.3E-4	ND 4.8E-4	ND 6.5E-4	ND 1.0E-3	ND 5.8E-4	ND 1.2E-3
1,2,4-trichlorobenzene	(H)	ND 6.6E-4	ND 9.4E-4	ND 1.3E-3	ND 2.0E-3	ND 1.1E-3	ND 2.4E-3
m,p-xylene	(H)	ND 3.8E-4	ND 5.5E-4	ND 7.5E-4	ND 1.2E-3	ND 6.6E-4	ND 1.4E-3
o-xylene	(H)	ND 3.8E-4	ND 5.5E-4	ND 7.5E-4	ND 1.2E-3	ND 6.6E-4	ND 1.4E-3
THC as Carbon			5.9E-2	5.6E-2	1.5E-1	7.2E-2	1.9E-2
Total HAPs		1.2E-2	1.1E-2	7.5E-3	1.6E-2	1.3E-2	1.7E-3
Total Terpenes		5.9E-2	3.2E-2	3.6E-2	1.2E-2	2.7E-2	0.0E+0

ND x.xEx = Below Detection Limit of x.xEx; H = CAA HAP; AI = Analytical Interference; ODTH = Oven Dried Tons per Hour; N = Not a HAP or VOC as defined by US EPA; MSF = 1000 square feet

Table 6.3.2. Comparison of Log Vat Emissions to Dryer and Press Emissions, Mill 112

Analyte		WESP Inlet (112-XDV2) lb/MSF 3/8"	Cooling Section Emissions lb/MSF 3/8"	Above Press (112-1PB1) lb/MSF 3/8"	Total Veneer and Press Emissions lb/MSF 3/8"	Log Steaming Vat Exhaust (112-1ML1) lb/MSF 3/8"	Log Steaming Vat as Percentage of Total Dryer and Press Emissions
acetaldehyde	(H)	1.9E-2	9.0E-3	7.2E-4	2.9E-2	4.7E-3	16%
acetone	(N)	2.1E-2	1.9E-2	3.2E-3	4.3E-2	3.0E-3	7%
acrolein	(H)	ND 2.2E-3	ND 1.2E-2	ND 1.6E-3	ND 1.6E-2	ND 7.6E-4	ND
benzene	(H)	ND 9.2E-4	ND 5.5E-3	ND 7.2E-4	ND 7.1E-3	ND 2.8E-4	ND
bromomethane	(H)	ND 1.1E-3	ND 6.7E-3	ND 8.7E-4	ND 8.7E-3	ND 3.4E-4	ND
camphene		ND 3.2E-2	ND 1.9E-1	ND 2.5E-2	ND 2.5E-1	ND 9.8E-3	ND
3-carene		ND 3.2E-2	ND 1.9E-1	ND 2.5E-2	ND 2.5E-1	ND 9.8E-3	ND
chloroethane	(H)	ND 7.6E-4	ND 4.5E-3	ND 5.9E-4	ND 5.9E-3	ND 2.3E-4	ND
chloroethene	(H)	ND 7.3E-4	ND 4.4E-3	ND 5.7E-4	ND 5.7E-3	ND 2.3E-4	ND
cumene	(H)	ND 2.8E-2	ND 1.7E-1	ND 2.2E-2	ND 2.2E-1	ND 8.7E-3	ND
p-cymene		ND 3.1E-2	ND 1.9E-1	ND 2.5E-2	ND 2.4E-1	ND 9.7E-3	ND
1,2-dichloroethane	(H)	ND 1.2E-3	ND 7.0E-3	ND 9.1E-4	ND 9.0E-3	ND 3.6E-4	ND
cis-1,2-dichloroethylene		ND 1.1E-3	ND 6.8E-3	ND 8.9E-4	ND 8.8E-3	ND 3.5E-4	ND
formaldehyde	(H)	1.4E-2	ND 3.5E-3	2.2E-3	1.6E-2	ND 2.3E-4	
limonene		ND 3.2E-2	ND 1.9E-1	ND 2.5E-2	ND 2.5E-1	ND 9.8E-3	ND
p-mentha-1,5-diene		ND 3.2E-2	ND 1.9E-1	ND 2.5E-2	ND 2.5E-1	ND 9.8E-3	ND
methanol	(H)	2.3E-2	1.4E-2	3.3E-2	6.9E-2	7.3E-3	11%
methyl ethyl ketone (MEK)	(H)	ND 2.8E-3	ND 1.6E-2	6.6E-4	6.6E-4	ND 9.6E-4	
methyl isobutyl ketone	(H)	ND 2.7E-3	1.6E-2	ND 2.0E-3	1.6E-2	ND 9.2E-4	
methylene chloride	(H)	ND 1.0E-3	ND 6.0E-3	ND 7.8E-4	ND 7.8E-3	ND 3.1E-4	ND
phenol	(H)	ND 4.4E-3	ND 2.5E-2	ND 3.3E-3	ND 3.2E-2	ND 1.5E-3	ND
alpha-pinene		1.4E-1	ND 1.9E-1	ND 2.5E-2	1.4E-1	5.6E-2	41%
beta-pinene		ND 3.2E-2	ND 1.9E-1	ND 2.5E-2	ND 2.5E-1	3.0E-3	
propionaldehyde	(H)	9.4E-4	ND 1.4E-2	ND 1.8E-3	9.4E-4	ND 8.6E-4	
styrene	(H)	ND 1.2E-3	ND 7.3E-3	ND 9.5E-4	ND 9.5E-3	ND 3.8E-4	ND
toluene	(H)	ND 1.1E-3	ND 6.5E-3	ND 8.4E-4	ND 8.4E-3	ND 3.3E-4	ND
1,2,4-trichlorobenzene	(H)	ND 2.1E-3	ND 1.3E-2	ND 1.7E-3	ND 1.7E-2	ND 6.6E-4	ND
m,p-xylene	(H)	ND 1.2E-3	ND 7.5E-3	ND 9.7E-4	ND 9.7E-3	ND 3.8E-4	ND
o-xylene	(H)	ND 1.2E-3	ND 7.5E-3	ND 9.7E-4	ND 9.7E-3	ND 3.8E-4	ND
THC as Carbon		3.5E-1	1.2E-1	7.9E-2	5.5E-1		
Total HAPs		5.6E-2	3.8E-2	3.6E-2	1.3E-1	1.2E-2	9%
Total Terpenes		1.4E-1	0.0E+0	0.0E+0	1.4E-1	5.9E-2	43%

ND x.xEx = Below Detection Limit of x.xEx; H = CAA HAP; AI = Analytical Interference; ODTH = Oven Dried Tons per Hour; N = Not a HAP or VOC as defined by US EPA; MSF = 1000 square feet

Table 6.3.3. Comparison of Chipper Vent Emissions to Dryer and Press Emissions, Mill 165

Analyte		RTO Inlet (165-XDV2) lb/MSF 3/8"	No. 4 Dryer Cooling Section (165-4DV4) lb/MSF 3/8"	Combined Press Exhaust (165-XPB1) lb/MSF 3/8	Total Veneer Dryer and Press Emissions lb/MSF 3/8"	Veneer Dry Chipper Cyclone Exhaust (165-1WD1) lb/MSF 3/8"	Panel Dry Trim Chipper Cyclone Exhaust (165-1WR1) lb/MSF 3/8"	Total Chippers Cyclone Exhaust lb/MSF 3/8"	Chippers Cyclone Exhaust as Percentage of Total Dryer and Press Emissions
acetaldehyde	(H)	8.0E-3	ND 6.5E-3	3.6E-3	1.2E-2	4.3E-4	ND 1.6E-3	4.3E-4	4%
acetone	(N)	8.1E-3	2.5E-3	3.3E-3	1.4E-2	4.3E-4	ND 1.6E-3	4.3E-4	3%
acrolein	(H)	ND 2.2E-3	ND 5.8E-3	ND 1.0E-3	ND 9.1E-3	ND 1.0E-3	ND 1.4E-3	ND 2.4E-3	ND
benzene	(H)	ND 8.8E-4	ND 2.3E-3	ND 4.2E-4	ND 3.6E-3	ND 4.1E-4	ND 5.5E-4	ND 9.6E-4	ND
bromomethane	(H)	ND 1.1E-3	ND 2.7E-3	ND 5.1E-4	ND 4.3E-3	ND 4.9E-4	ND 6.7E-4	ND 1.2E-3	ND
camphene		ND 3.1E-2	ND 7.9E-2	ND 1.5E-2	ND 1.2E-1	ND 1.4E-2	ND 1.9E-2	ND 3.3E-2	ND
3-carene		ND 3.1E-2	ND 7.9E-2	ND 1.5E-2	ND 1.2E-1	ND 1.4E-2	ND 1.9E-2	ND 3.3E-2	ND
chloroethane	(H)	ND 7.3E-4	ND 1.9E-3	ND 3.5E-4	ND 2.9E-3	ND 3.3E-4	ND 4.6E-4	ND 7.9E-4	ND
chloroethene	(H)	ND 7.1E-4	ND 1.8E-3	ND 3.3E-4	ND 2.8E-3	ND 3.2E-4	ND 4.4E-4	ND 7.7E-4	ND
cumene	(H)	ND 2.7E-2	ND 7.0E-2	ND 1.3E-2	ND 1.1E-1	ND 1.2E-2	ND 1.7E-2	ND 2.9E-2	ND
p-cymene		ND 3.0E-2	ND 7.8E-2	ND 1.4E-2	ND 1.2E-1	ND 1.4E-2	ND 1.9E-2	ND 3.3E-2	ND
1,2-dichloroethane	(H)	ND 1.1E-3	ND 2.9E-3	ND 5.3E-4	ND 4.5E-3	ND 5.1E-4	ND 7.0E-4	ND 1.2E-3	ND
cis-1,2-dichloroethylene		ND 1.1E-3	ND 2.8E-3	ND 5.2E-4	ND 4.4E-3	ND 5.0E-4	ND 6.9E-4	ND 1.2E-3	ND
formaldehyde	(H)	1.9E-2	2.5E-3	3.5E-4	2.2E-2	2.4E-4	ND 4.2E-4	2.4E-4	1%
limonene		4.3E-2	ND 7.9E-2	ND 1.5E-2	4.3E-2	ND 1.4E-2	ND 1.9E-2	ND 3.3E-2	
p-mentha-1,5-diene		ND 3.1E-2	ND 7.9E-2	ND 1.5E-2	ND 1.2E-1	ND 1.4E-2	ND 1.9E-2	ND 3.3E-2	ND
methanol	(H)	2.6E-2	1.9E-2	9.8E-2	1.4E-1	8.7E-3	7.5E-3	1.6E-2	11%
methyl ethyl ketone (MEK)	(H)	ND 2.7E-3	ND 7.3E-3	ND 1.3E-3	ND 1.1E-2	ND 1.3E-3	ND 1.8E-3	ND 3.1E-3	ND
methyl isobutyl ketone	(H)	ND 2.7E-3	ND 7.1E-3	ND 1.3E-3	ND 1.1E-2	ND 1.2E-3	ND 1.7E-3	ND 3.0E-3	ND
methylene chloride	(H)	ND 9.6E-4	ND 2.5E-3	ND 4.5E-4	ND 3.9E-3	ND 4.4E-4	ND 6.0E-4	ND 1.0E-3	ND
phenol	(H)	1.6E-3	ND 1.2E-2	ND 2.1E-3	1.6E-3	1.5E-3	ND 2.9E-3	1.5E-3	99%
alpha-pinene		1.5E+0	8.9E-2	1.6E-1	1.7E+0	3.2E-2	3.6E-2	6.8E-2	4%
beta-pinene		4.5E-1	ND 7.9E-2	5.2E-2	5.1E-1	ND 1.4E-2	ND 1.9E-2	ND 3.3E-2	
propionaldehyde	(H)	ND 2.4E-3	ND 6.6E-3	ND 1.2E-3	ND 1.0E-2	ND 1.1E-3	ND 1.6E-3	ND 2.8E-3	ND
styrene	(H)	ND 1.2E-3	ND 3.0E-3	ND 5.6E-4	ND 4.7E-3	ND 5.4E-4	ND 7.4E-4	ND 1.3E-3	ND
toluene	(H)	ND 1.0E-3	ND 2.7E-3	ND 4.9E-4	ND 4.2E-3	ND 4.8E-4	ND 6.5E-4	ND 1.1E-3	ND
1,2,4-trichlorobenzene	(H)	ND 2.0E-3	ND 5.2E-3	ND 9.7E-4	ND 8.3E-3	ND 9.4E-4	ND 1.3E-3	ND 2.2E-3	ND
m,p-xylene	(H)	ND 1.2E-3	ND 3.1E-3	ND 5.7E-4	ND 4.8E-3	ND 5.5E-4	ND 7.5E-4	ND 1.3E-3	ND
o-xylene	(H)	ND 1.2E-3	ND 3.1E-3	ND 5.7E-4	ND 4.8E-3	ND 5.5E-4	ND 7.5E-4	ND 1.3E-3	ND
THC as Carbon		3.2E+0		3.2E-1	3.6E+0	5.9E-2	5.6E-2	1.1E-1	3%
Total HAPs		5.5E-2	2.1E-2	1.0E-1	1.8E-1	1.1E-2	7.5E-3	1.8E-2	10%
Total Terpenes		1.9E+0	8.9E-2	2.1E-1	2.2E+0	3.2E-2	3.6E-2	6.8E-2	3%

ND x.xEx = Below Detection Limit of x.xEx; H = CAA HAP; AI = Analytical Interference; ODTH = Oven Dried Tons per Hour; N = Not a HAP or VOC as defined by US EPA; MSF = 1000 square feet

Table 6.3.4. Comparison of Sander and Skinner Saw Emissions to Dryer and Press Emissions, Mill 170

Analyte		RTO Inlet (170-XDV2) lb/MSF 3/8"	Total Veneer Cooling Section Emissions lb/MSF 3/8"	No. 3 Press Vent (170-3PB1) lb/MSF 3/8"	Total Veneer Dryer and Press Emissions lb/MSF 3/8"	Sander Baghouse Vent (170-1SD1) lb/MSF 3/8"	Skinner Saw Outlet (170-XMW1) lb/MSF 3/8"	Total Sander and Saw Emissions lb/MSF 3/8"	Sander and Saw as Percentage of Total Veneer Dryer and Press Emissions
acetaldehyde	(H)	1.5E-2	ND 4.8E-3	1.2E-2	2.7E-2	2.1E-3	4.3E-4	2.6E-3	9%
acetone	(N)	1.5E-2	2.1E-3	1.6E-2	3.3E-2	4.7E-3	1.9E-3	6.6E-3	20%
acrolein	(H)	ND 9.2E-4	ND 4.4E-3	ND 1.6E-3	ND 6.8E-3	ND 2.2E-3	ND 1.2E-3	ND 3.4E-3	ND
benzene	(H)	ND 3.5E-4	ND 1.8E-3	ND 5.9E-4	ND 2.7E-3	ND 8.6E-4	ND 4.9E-4	ND 1.3E-3	ND
bromomethane	(H)	ND 4.3E-4	ND 2.2E-3	ND 7.2E-4	ND 3.3E-3	ND 1.0E-3	ND 5.9E-4	ND 1.6E-3	ND
camphene		ND 1.2E-2	ND 6.2E-2	ND 2.1E-2	ND 9.5E-2	ND 3.0E-2	ND 1.7E-2	ND 4.7E-2	ND
3-carene		ND 1.2E-2	ND 6.2E-2	ND 2.1E-2	ND 9.5E-2	ND 3.0E-2	ND 1.7E-2	ND 4.7E-2	ND
chloroethane	(H)	ND 2.9E-4	ND 1.5E-3	ND 4.9E-4	ND 2.3E-3	ND 7.1E-4	ND 4.0E-4	ND 1.1E-3	ND
chloroethene	(H)	ND 2.8E-4	ND 1.4E-3	ND 4.7E-4	ND 2.2E-3	ND 6.8E-4	ND 3.9E-4	ND 1.1E-3	ND
cumene	(H)	ND 1.1E-2	ND 5.5E-2	ND 1.8E-2	ND 8.4E-2	ND 2.6E-2	ND 1.5E-2	ND 4.1E-2	ND
p-cymene		ND 1.2E-2	ND 6.1E-2	ND 2.0E-2	ND 9.4E-2	ND 2.9E-2	ND 1.7E-2	ND 4.6E-2	ND
1,2-dichloroethane	(H)	ND 4.5E-4	ND 2.3E-3	ND 7.5E-4	ND 3.5E-3	ND 1.1E-3	ND 6.2E-4	ND 1.7E-3	ND
cis-1,2-dichloroethylene		ND 4.4E-4	ND 2.2E-3	ND 7.4E-4	ND 3.4E-3	ND 1.1E-3	ND 6.1E-4	ND 1.7E-3	ND
formaldehyde	(H)	8.2E-3	9.0E-4	3.8E-3	1.3E-2	1.8E-3	2.7E-4	2.0E-3	16%
limonene		1.5E-1	ND 6.2E-2	1.0E-2	1.6E-1	ND 3.0E-2	ND 1.7E-2	ND 4.7E-2	
p-mentha-1,5-diene		1.7E-2	ND 6.2E-2	ND 2.1E-2	1.7E-2	ND 3.0E-2	ND 1.7E-2	ND 4.7E-2	
methanol	(H)	4.1E-2	1.4E-3	3.3E-1	3.7E-1	1.2E-2	1.2E-2	2.4E-2	7%
methyl ethyl ketone (MEK)	(H)	ND 1.2E-3	ND 5.5E-3	ND 2.0E-3	ND 8.6E-3	ND 2.7E-3	ND 1.6E-3	ND 4.3E-3	ND
methyl isobutyl ketone	(H)	ND 1.1E-3	ND 5.4E-3	ND 1.9E-3	ND 8.4E-3	ND 2.7E-3	ND 1.5E-3	ND 4.2E-3	ND
methylene chloride	(H)	ND 3.8E-4	ND 1.9E-3	ND 6.4E-4	ND 3.0E-3	ND 9.3E-4	ND 5.3E-4	ND 1.5E-3	ND
phenol	(H)	8.4E-4	ND 8.8E-3	1.1E-3	1.9E-3	ND 4.4E-3	ND 2.5E-3	ND 7.0E-3	
alpha-pinene		2.1E+0	1.5E-2	1.6E-1	2.2E+0	1.2E-2	2.7E-2	3.9E-2	2%
beta-pinene		5.5E-1	ND 6.2E-2	5.3E-2	6.0E-1	ND 3.0E-2	ND 1.7E-2	ND 4.7E-2	
propionaldehyde	(H)	ND 1.0E-3	ND 4.9E-3	ND 1.8E-3	ND 7.7E-3	ND 2.5E-3	ND 1.4E-3	ND 3.9E-3	ND
styrene	(H)	ND 4.7E-4	ND 2.4E-3	ND 7.9E-4	ND 3.6E-3	ND 1.1E-3	ND 6.5E-4	ND 1.8E-3	ND
toluene	(H)	ND 4.2E-4	ND 2.1E-3	ND 7.0E-4	ND 3.2E-3	ND 1.0E-3	ND 5.8E-4	ND 1.6E-3	ND
1,2,4-trichlorobenzene	(H)	ND 8.2E-4	ND 4.1E-3	ND 1.4E-3	ND 6.3E-3	ND 2.0E-3	ND 1.1E-3	ND 3.1E-3	ND
m,p-xylene	(H)	ND 4.8E-4	ND 2.4E-3	ND 8.1E-4	ND 3.7E-3	ND 1.2E-3	ND 6.6E-4	ND 1.8E-3	ND
o-xylene	(H)	ND 4.8E-4	ND 2.4E-3	ND 8.1E-4	ND 3.7E-3	ND 1.2E-3	ND 6.6E-4	ND 1.8E-3	ND
THC as Carbon		3.7E+0		3.2E-1	4.0E+0	1.5E-1	7.2E-2	2.2E-1	5%
Total HAPs		6.5E-2	2.3E-3	3.4E-1	4.1E-1	1.6E-2	1.3E-2	2.9E-2	7%
Total Terpenes		2.8E+0	1.5E-2	2.2E-1	3.0E+0	1.2E-2	2.7E-2	3.9E-2	1%

ND x.xEx = Below Detection Limit of x.xEx; H = CAA HAP; AI = Analytical Interference; ODTH = Oven Dried Tons per Hour; N = Not a HAP or VOC as defined by US EPA; MSF = 1000 square feet

Table 6.3.5. Comparison of Combined Dust Baghouse Emissions to Dryer and Press Emissions, Mill 405

Analyte		Total Heated Zone Emissions lb/MSF 3/8"	Cooling Section Vent (405-1DV1) lb/MSF 3/8"	No. 1 Press Vent (405-1PB1) lb/MSF 3/8"	Total Dryer and Press Emissions lb/MSF 3/8"	Combined Dust Baghouse Vent (405-1SI1) lb/MSF 3/8"	Baghouse Vent as Percentage of Total Dryer and Press Emissions
acetaldehyde	(H)	5.2E-3	ND 2.3E-3	ND 1.2E-2	5.2E-3	ND 3.4E-3	
acetone	(N)	4.5E-3	ND 2.3E-3	4.3E-2	4.7E-2	8.9E-3	19%
acrolein	(H)	AI	ND 2.1E-3	ND 1.1E-2	ND 1.3E-2	ND 3.0E-3	ND
benzene	(H)	ND 6.0E-4	ND 7.7E-4	ND 4.0E-3	ND 5.3E-3	ND 1.0E-3	ND
bromomethane	(H)	ND 7.2E-4	ND 9.3E-4	ND 4.8E-3	ND 6.5E-3	ND 1.3E-3	ND
camphene		ND 2.1E-2	ND 2.7E-2	ND 1.4E-1	ND 1.9E-1	ND 3.6E-2	ND
3-carene		ND 2.1E-2	ND 2.7E-2	ND 1.4E-1	ND 1.9E-1	ND 3.6E-2	ND
chloroethane	(H)	ND 4.9E-4	ND 6.3E-4	ND 3.3E-3	ND 4.4E-3	ND 8.6E-4	ND
chloroethene	(H)	ND 4.8E-4	ND 6.1E-4	ND 3.2E-3	ND 4.2E-3	ND 8.3E-4	ND
cumene	(H)	ND 1.8E-2	ND 2.4E-2	ND 1.2E-1	ND 1.6E-1	ND 3.2E-2	ND
p-cymene		ND 2.0E-2	ND 2.6E-2	ND 1.4E-1	ND 1.8E-1	ND 3.6E-2	ND
1,2-dichloroethane	(H)	ND 7.5E-4	ND 9.7E-4	ND 5.0E-3	ND 6.7E-3	ND 1.3E-3	ND
cis-1,2-dichloroethylene		ND 7.4E-4	ND 9.5E-4	ND 4.9E-3	ND 6.6E-3	ND 1.3E-3	ND
formaldehyde	(H)	2.4E-3	ND 6.7E-4	ND 2.6E-3	2.4E-3	ND 8.7E-4	
limonene		ND 2.1E-2	ND 2.7E-2	ND 1.4E-1	ND 1.9E-1	ND 3.6E-2	ND
p-mentha-1,5-diene		ND 2.1E-2	ND 2.7E-2	ND 1.4E-1	ND 1.9E-1	ND 3.6E-2	ND
methanol	(H)	9.5E-3	ND 2.2E-3	1.6E-2	2.6E-2	1.7E-3	7%
methyl ethyl ketone (MEK)	(H)	ND 2.1E-3	ND 2.6E-3	ND 1.3E-2	ND 1.8E-2	ND 3.8E-3	ND
methyl isobutyl ketone	(H)	ND 2.0E-3	ND 2.5E-3	ND 1.3E-2	ND 1.7E-2	ND 3.6E-3	ND
methylene chloride	(H)	ND 6.5E-4	ND 8.3E-4	ND 4.3E-3	ND 5.8E-3	ND 1.1E-3	ND
phenol	(H)	ND 3.4E-3	ND 4.2E-3	ND 2.2E-2	ND 2.9E-2	ND 6.2E-3	ND
alpha-pinene		ND 2.1E-2	ND 2.7E-2	ND 1.4E-1	ND 1.9E-1	ND 3.6E-2	ND
beta-pinene		ND 2.1E-2	ND 2.7E-2	ND 1.4E-1	ND 1.9E-1	ND 3.6E-2	ND
propionaldehyde	(H)	ND 1.9E-3	ND 2.3E-3	ND 1.2E-2	ND 1.6E-2	ND 3.4E-3	ND
styrene	(H)	ND 7.9E-4	ND 1.0E-3	ND 5.3E-3	ND 7.1E-3	ND 1.4E-3	ND
toluene	(H)	ND 7.0E-4	ND 9.0E-4	ND 4.7E-3	ND 6.3E-3	ND 1.2E-3	ND
1,2,4-trichlorobenzene	(H)	ND 1.4E-3	ND 1.8E-3	ND 9.2E-3	ND 1.2E-2	ND 2.4E-3	ND
m,p-xylene	(H)	ND 8.1E-4	ND 1.0E-3	ND 5.4E-3	ND 7.2E-3	ND 1.4E-3	ND
o-xylene	(H)	ND 8.1E-4	ND 1.0E-3	ND 5.4E-3	ND 7.2E-3	ND 1.4E-3	ND
THC as Carbon		5.3E-2	3.7E-3	8.8E-2	1.4E-1	1.9E-2	13%
Total HAPs		1.7E-2	0.0E+0	1.6E-2	3.3E-2	1.7E-3	5%
Total Terpenes		0.0E+0	0.0E+0	0.0E+0	0.0E+0	0.0E+0	

ND x.xEx = Below Detection Limit of x.xEx; H = CAA HAP; AI = Analytical Interference; ODTH = Oven Dried Tons per Hour; N = Not a HAP or VOC as defined by US EPA; MSF = 1000 square feet

6.4 Impact of Control Devices on HAP and VOC Removal

Emission control devices typically found on softwood plywood veneer dryers include particulate matter and VOC control devices. Devices intended to control particulate emissions include wet electrostatic precipitators (WESPs), electrified filter beds (EFBs), wet scrubbers and dry filters. Devices installed for volatile organic compound (VOC) control include regenerative thermal oxidizers (RTOs) and regenerative catalytic oxidizers (RCOs). Three WESPs, one EFB, two RTOs and one RCO were tested during the course of this study.

The effectiveness of these control devices for controlling HAP and VOC emissions is discussed below. Control device efficiencies were calculated when the control device inlet and outlet emissions met either of the following criteria:

(1) Both the inlet and outlet gas streams had measured mass emissions above the method detection limit.

(2) The outlet gas stream had measured mass emissions below the method detection limit, and the inlet gas stream had measured mass emissions at least ten times as large as the outlet detection limit. Results calculated using these criteria were reported as greater than or equal to the calculated value, since the outlet emissions were only known as less than or equal to the detection limit.

6.4.1 *Wet Electrostatic Precipitators*

Table 6.4.1 summarizes the effect of the WESPs tested on HAP and VOC emissions. At Mill 115 the WESP was tested while a mixed fir furnish was dried, and at Mill 112 tests were conducted while two different veneer types were dried, Douglas-fir and a Douglas-fir/ponderosa pine mix. Samples were also collected with two different furnishes at Mill 188, first with fresh Douglas-fir and then with 7 day old Douglas-fir veneer. The effect of the WESPs on HAP emissions at these facilities was highly variable and followed no clear pattern. There was considerable run-to-run and source-to-source variability. The WESPs also had little effect on VOC emissions. Individual sample runs indicated small removal efficiencies as well as negative efficiencies. Overall the removal efficiency for Method 25A measured VOCs was essentially zero.

Although some data exists which suggests VOC removal by wet particulate control devices is possible (EPA 1983, EPA 1989), little detailed information is available about the operation of the devices described in those documents. During this study, the three WESPs tested were all GeoEnergy e-tube precipitators of similar design. Quench sprays are used in the inlet ducts for these precipitators to reduce vent gas temperatures and to promote aerosol formation. The water used for these sprays is recirculated, with makeup water added to balance evaporative losses and periodic caustic addition for pitch control. No purge is designed into the liquid recirculation systems for these precipitators, though some liquid associated with the pitch is lost, and at one mill, a low flow of condensate from the stack sump was pumped to the log vats. Because these systems do not purge liquid from the WESP, the "scrubbing" effect of the precipitator should be limited to the condensable organic matter removed by the cooling effect of the quench sprays, which might otherwise be measured as VOC. It is assumed that water soluble compounds, such as formaldehyde, will build up to a saturation point in the liquid, which at that point loses its absorption capacity. Because fresh makeup water is periodically added (along with caustic), it is possible that some short term reductions of HAP emissions might be observed. Conversion of HAPs from one compound to another (such as oxidation of methanol to formaldehyde) might also possible, but given the way the quench water is recirculated, neither absorption nor reaction would be expected to significantly alter overall HAP emission rates. Considering that these devices were designed for particulate emission

Table 6.4.1. Summary of WESP Emission Control Efficiencies at Plywood Mills

Compound Detected at Inlet	Mill 112, Douglas Fir		Mill 112, Fir/Pine		Mill 115, Mixed Fir		Mill 188, Fresh Douglas Fir		Mill 188, Aged Douglas Fir	
	Average Inlet Concentration, ppmvd	Average Removal Efficiency, %	Average Inlet Concentration, ppmvd	Average Removal Efficiency, %	Average Inlet Concentration, ppmvd	Average Removal Efficiency, %	Average Inlet Concentration, ppmvd	Average Removal Efficiency, %	Average Inlet Concentration, ppmvd	Average Removal Efficiency, %
acetaldehyde	3	60	4.6	74	3.7	0	0.9	<0	5.2	<0
acetone	2.5	45	2.8	65	2.5	65	0.5	18	2.9	20
formaldehyde	3.2	80	20.2	74	6	36	1.2	<0	3.2	<0
methanol	5.1	16	4.4	4	9.7	<0	2.2	9	4.3	<0
alpha-pinene	7.2	<0	1.5	<0	ND	ND	9.8	<0	3.8	7
THC	214	<0	228	<0	64.3	<0	246	<0	215	3

control, it is not unexpected that their effect on gaseous emissions is so variable. Liquid sampling of the quench streams was conducted concurrent with vent testing. The results of these analyses are listed with the individual mill test results in Section 5.

In general the water soluble HAPs sampled at detectable levels in the WESP inlets and exhausts were detected in the liquid samples. MEK and MIBK, which were below detection levels in the WESP inlet and outlet gas streams (with one exception for MIBK) were detected in a majority of the liquid samples. Propionaldehyde occurred at levels near the detection limits in both the liquid and gas samples. These results indicate that liquid samples could be used to qualitatively screen for common water soluble HAPs. The results from Mill 112 (Table 5.2.7) show higher HAP concentrations in recirculated streams (XDV1L) as opposed to stack condensate and WESP liquid carry-over (XDV2L).

6.4.2 *Electrified Filter Bed*

At Mill 155 emissions testing was conducted on the inlet and outlet of an electrified filter bed (EFB) while the veneer dryers were processing white fir veneer. Table 6.4.2 shows the effects of this device on HAP and VOC emissions from the dryers. This EFB, like the WESPs discussed above, was designed as a particulate control device. EFBs are more commonly used on oriented strandboard dryers, and are normally considered to be dry particulate control devices (EPA 1989). In this application, however, just before the hot dryer gases reach the ionizer they pass through an evaporative gas cooler, where atomized fresh water is sprayed into the gas stream. This is similar to the way gases are cooled in WESPs. In this study, HAP measurements made before and after the EFB indicated near zero or negative removal efficiencies, although inlet concentrations were low. VOC measurements made before and after the EFB differed by less than 10% for each of the three runs, and the average inlet and outlet concentrations (81ppm) were essentially identical.

The results show that gaseous emissions were not significantly affected by EFBs.

6.4.3 *Regenerative Thermal Oxidizers*

The emissions control efficiencies of the veneer dryer RTOs at Mills 165 and 170 are shown in Table 6.4.3. At both of these mills, southern pine veneer was the furnish dried during testing.

Methanol, formaldehyde and acetaldehyde were the predominant HAPs measured in the RTO inlet gases, contributing over 95% of the total HAP emissions. For the two RTOs tested, the average methanol destruction efficiency was over 90%. At Mill 165, the average formaldehyde and acetaldehyde destruction efficiencies were 95% and 63%, respectively, and at Mill 170 the respective efficiencies were 51% and 86%. For runs 1 and 2 at Mill 170, the formaldehyde destruction efficiency averaged 87%, but for run 3, slightly more formaldehyde was found in the outlet than in the inlet. The other major compounds found in this run were destroyed at a rate greater than 90%. It is possible that the Mill 170 RTO outlet formaldehyde measurement made for run three was in error. A second possibility is that formaldehyde was generated within the RTO. RTO outlet methane and carbon monoxide levels for run no. 3 were, respectively, 2.4 and 3.4 times the average levels of the first two runs (Table 5.6.6). Carbon monoxide control efficiency, essentially zero for the first two runs, was -350% for run no. 3.

The average VOC destruction efficiency for the RTOs tested at Mills 165 and 170 was 97%. Methane was measured in the RTO inlet and outlet streams, and the VOC results were adjusted accordingly.

Table 6.4.2. Summary of Electrified Filter Bed Emission Control Efficiencies at Plywood Mills		
	Mill 155, White Fir	
Compounds Detected at Inlet	Average Inlet Concentration, ppmvd	Average Removal Efficiency, %
acetone	1.2	<0
formaldehyde	2.3	<0
methanol	13.7	6
THC	80.6	<0

Table 6.4.3. Summary of Regenerative Thermal Oxidizers Emission Control Efficiencies at Plywood Mills

Compounds Detected at Inlet	Mill 165, Southern Pine		Mill 170, Southern Pine	
	Average Inlet Concentration, ppmvd	Average Removal Efficiency, %	Average Inlet Concentration, ppmvd	Average Removal Efficiency, %
acetaldehyde	1.2	63	5.8	86
acetone	0.9	59	4.3	87
formaldehyde	4.4	95	4.5	51
limonene	2.1	ND	18.4	92
methanol	5.5	88	21.7	94
alpha-pinene	71.9	97	249.0	99
beta-pinene	22.5	93	66.6	98
THC	1814	95	5090	97
Average Methane Concentration	3		5	
THC, Adjusted for Methane*	1811	95	5085	98

*Methane at the RTO outlets averaged 3 ppm at Mill 165 and 6 ppm at Mill 170, and was subtracted from the outlet VOC emissions. All calculations are based on emissions rates as lb/MSF (3/8" basis)

Although RTOs by design are intended for control of VOCs (THC as measured by EPA Method 25 or 25A), it is to be expected that, given the high temperatures and relatively long residence times, the individual organic HAP compounds found in veneer drying sources should be efficiently destroyed. With a few exceptions, which could be related to measurement error or to the fact that many of the outlet measurements were near the method detection limit, destruction of organic HAPs in veneer dryer vent gases by RTOs was found to be adequate. The exceptions from this study, when considered with results from other studies in this series, indicate a need for further testing and better understanding of specific compound removed efficiencies and HAP generation within these units.

6.4.4 *Regenerative Catalytic Oxidizer*

The emission control efficiencies of the veneer dryer regenerative catalytic oxidizer (RCO) tested at Mill 194 are shown in Table 6.4.4. Southern pine veneer was the furnish dried during testing.

Acetaldehyde was the predominant HAP measured in the RCO inlet gases, contributing 37% of the total HAP emissions. Formaldehyde was the next most common compound comprising 34% of the dryer emissions, and methanol was third, with 15% of dryer emissions. The remainder of the HAPs in the RCO inlet detected in all 3 runs included benzene, styrene, toluene, and xylenes and phenol. The presence of the benzene-related compounds is discussed in Section 6.1. The only HAPs present in the RCO outlet were acetaldehyde, formaldehyde, and methanol, with respective average removal efficiencies of 28%, 51%, and 61%. Average VOC reduction (as measured by method 25A), however, was over 90%. Methane was measured in the RCO inlet and outlet streams, and the VOC results were adjusted accordingly.

The relatively low HAP reduction efficiencies may be due to compound specific interactions with the catalyst. The catalyst beds in the RCO are operated at a temperature around 900°F, as compared to RTOs which normally have chamber temperature around 1500°F. Catalysts are also susceptible to degradation by particulates or by catalyst poisons such as phosphorus, tin, iron or silicon (Jennings 1985).

Table 6.4.4. Summary of Regenerative Catalytic Oxidizers Emission Control Efficiencies at Plywood Mills

Compounds Detected at Inlet	Mill 194, Southern Pine	
	Average Inlet Concentration, ppmvd	Average Removal Efficiency, %
acetaldehyde	15.5	28
acetone	7.8	15
formaldehyde	20.8	51
methanol	9.3	61
alpha-pinene	71.9	98
beta-pinene	28.0	92
THC	1831	89
Average Methane Concentration	39	
THC, Adjusted for Methane*	1792	92

*Methane at the RCO outlet averaged 38 ppm and was subtracted from the outlet VOC emissions. All calculations are based on emission rates as lb/MSF (3/8" basis)

7.0 SUMMARY

Studies to measure volatile organic HAP and VOC emissions were conducted on softwood veneer dryers at seven mills, hardwood veneer dryers at three mills, radio frequency veneer dryers at two mills, softwood hot presses at five mills, and hardwood hot presses at three mills. At some mills, multiple dryers and/or presses were sampled. Similar sources using a variety of wood species were tested and multiple sets of tests with different furnish types were conducted on a few sources. A number of sources considered as miscellaneous sources were also tested. These included a log-steaming vat, a plywood sander and saw, a combined dust baghouse vent, and two trim chippers. Results are summarized in Table 7.1.1 and discussed below.

(1) The heated zones of steam heated western softwood veneer dryers were tested at four mills. At two of these facilities, the dryers were tested with two different furnishes. Methanol was the predominant HAP, followed by acetaldehyde and then formaldehyde. Drying of a Douglas-fir/ponderosa pine mix at one facility resulted in increased THC emissions over the drying of Douglas-fir alone, but did not significantly affect total HAP emissions. At another mill, the drying of one week-old Douglas-fir veneer resulted in increased HAP emissions over the drying of fresh veneer, but did not significantly affect THC emissions.

(2) The heated zones of southern softwood veneer dryers were tested at three mills. Four of the dryer sets tested were steam heated, and one was gas-fired. As was the case with western softwood dryers, methanol was the predominant HAP, followed by acetaldehyde and formaldehyde. HAP emissions from the gas-fired dryer were significantly different than the steam-heated dryers.

(3) The heated zones of hardwood veneer dryers were tested at three mills. At one mill yellow poplar furnish was tested, and at the other two facilities a variety of furnishes, including white oak, red oak, maple and cherry were tested. Methanol was the predominate HAP measured. The average total HAP emission rate for the hardwood dryers was 0.0031 lb/MSF and the average THC emission rate was 0.017 lb/MSF. These and other emission values are presented on a lb/MSF 3/8" basis in Table 7.1.1 for comparative purposes.

(4) Some veneer cooling section vents associated with the softwood and hardwood veneer dryers were sampled. For hardwood veneer cooling sections, the average HAP emission rate was 0.0025 lb/MSF, and the average THC emissions were 0.037 lb/MSF. Again, this emission rate basis differs from that provided in Table 7.1.1. Although cooling section vent HAP emissions for all three types of sources were similar, the associated cooling section vents accounted for a large percentage of the emissions from hardwood veneer dryers, but were less significant for western and southern softwood dryers. Average THC emission rates were much higher for the hardwood veneer cooling section than for the associated dryer heated zone vents, but this may be related to the operations of one dryer at mill 400 rather than to the category as a whole.

(5) Only two radio frequency dryers were tested, one processing western softwood, the other southern softwood. Emissions of both HAPs and VOCs were higher from the southern dryer.

(6) Plywood press vents were tested at two western softwood mills, three southern softwood mills and three hardwood plywood mills. HAP and VOC emissions were similar for the western softwood and hardwood plywood presses. Southern pine plywood presses had higher emissions of total HAPs and VOCs.

(7) A number of "miscellaneous" sources were tested. A log steaming vat was tested at a western softwood mill. A cyclone, receiving exhaust from saws and a hogger, and a baghouse

Table 7.1.1. Summary of Plywood Results - Average Values

Type	Conditions	Uncontrolled Emissions, lb/MSF 3/8"					
		No. Tests Averaged	Acetaldehyde	Formaldehyde	Methanol	M25A THC as C	Total HAP
Western Softwood							
Veneer Dryer	Steam	8	0.02	0.02	0.04	0.56	0.09
Veneer Dryer Cooler		3	0.004	ND	0.005	0.07	0.02
RF Dryer		1	ND	ND	0.0005	0.02	0.0005
Presses		2	0.0004	0.001	0.04	0.06	0.04
Log Vat		1	0.005	ND	0.007	--	0.01
Southern Softwood							
Veneer Dryer	Steam	5	0.01	0.01	0.04	2.8	0.06
Veneer Dryer	Gas-Fired	1	0.04	0.09	0.04	2.5	0.20
Veneer Dryer Cooler		3	0.0001	0.001	0.01	0.04	0.02
RF Dryer		1	0.003	0.0007	0.005	0.5	0.01
Presses		4	0.005	0.002	0.2	0.3	0.2
Sander		1	0.002	0.002	0.01	0.1	0.02
Saw Trim Chipper		2	0.0004	0.0002	0.01	0.1	0.01
Saw		1	0.0004	0.0003	0.01	0.07	0.01
Hardwood *							
Veneer Dryer	Steam	7	0.004	0.001	0.04	0.3	0.05
Veneer Dryer	Wood-Fired	1	0.005	0.002	0.01	0.05	0.02
Veneer Dryer Cooler		7	0.02	0.002	0.005	0.45	0.04
Presses		4	ND	0.004	0.03	0.07	0.04
Wood Material Baghouse		1	ND	ND	0.002	0.02	0.002

* Emissions provided on lb/MSF 3/8" basis for comparative purposes, Section 5 provides results on lb/MSF basis.

receiving sander exhausts were tested at a southern pine mill. A baghouse, receiving exhausts from a trim saw, composer, core saw, dry hogger, hammermill and sander was tested at a hardwood plywood mill. Emission factors from these sources are somewhat mill specific and will not accurately predict emissions from other facilities. These sources were tested primarily to determine their significance relative to mill-wide emissions.

(8) Three wet electrostatic precipitators (WESPs), one electrified filter bed (EFB), two regenerative thermal oxidizers (RTOs) and one regenerative catalytic oxidizer (RCO) were tested. All of these were installed as control devices on softwood veneer dryers. The WESPs and EFB had no consistent effect on HAP and THC emissions. The two RTOs and RCO removed THC levels in the dryer gas streams by 90 percent or better. Since THC removal is the design target for these devices, they appeared to function as intended. HAPs removal efficiencies were less consistent than those for THC. This lack of consistency may be due to low inlet concentrations and measurement accuracy near detection limits. Some inconsistency may also be due to HAPs formation within the control devices or differences in the organic compounds.

(9) Based on the data in this report, many plywood mills will be close to the MACT major source thresholds of 10 tons per year (TPY) for a single HAP or 25 TPY for aggregate HAPs. Excluding boiler emissions, mills near the thresholds will likely reach the 10 TPY threshold for methanol prior to the 25 TPY aggregate threshold. This may not be the case, however, when boiler emissions are considered. It appears that careful evaluation, and perhaps mill specific testing, will be needed at many mills before a major source determination can be made.

8.0 INFORMATION NEEDS

(1) Methanol and formaldehyde emissions are generated from both the wood and resin in a press. Presumably such parameters as press temperature, press cycle time, panel thickness, resin application rate, wood moisture content, and perhaps press pressure affect emission rates. Specific resin parameters such as free formaldehyde content, and methanol content are also likely to affect emissions. Closed caul and other laboratory scale pressing experiments could yield valuable information at a reasonable cost. Full scale results from this Wood Products MACT testing program should be compared to closed caul results to assess the applicability of closed caul testing to full scale operations.

(2) This plywood study, and the Wood Products MACT study as a whole, does not provide sufficient information to evaluate potential relationships between dryer emissions and process parameters such as temperature or wood species. Controlled laboratory studies need to be conducted to determine the relationship between dryer temperature and HAP formation. Similarly, controlled studies with wood species, wood moisture content, and veneer thickness as variables could yield valuable information.

(3) Information from one direct-gas fired and one direct-wood fired dryer presented a number of questions concerning the potential for HAPs formation both at the burner and in blend or mixing chambers. Test results from non-recirculating direct-fired dryer inlets and outlets and blend chamber inlets and outlets could help answer some of the questions generated.

(4) Evaluating HAP and VOC emission levels from sources other than dryers and presses (miscellaneous sources) is reasonably difficult. These sources, having been tested to a very limited degree, do not often have good sampling access. It is often difficult to obtain accurate production rates. Finally, since many use pneumatic conveying systems, multiple sources are often vented to a common location, making segregation of emissions from a single source difficult or impossible. Searches need to be conducted for miscellaneous sources with good sampling access and the capability for determination of definite production rates. Once found, sampling and data compilation would be straightforward. Such data would benefit mills currently employing emission factors to estimate emissions from miscellaneous sources.

(5) In this report a single trial was conducted to determine the effect of green veneer age on emissions. The results indicated that HAPs are either generated from the drying of microbial organisms or that microbial activity affects the veneer resulting in higher HAP emissions. Additional work is needed to support or refute the information provided in this report.

(6) Roundwood received at plywood mills is highly variable. Fourty and 80-year old logs may arrive on the same truck. Two trucks arriving simultaneously may bring wood from areas 100 miles apart and from very different local ecosystems. Considering that dryer emissions are related to wood furnish characteristics, a study to determine variability in wood furnish could yield information concerning expected emission variability.

(7) Test methods used in this program were designed to capture HAPs, terpenes, and total VOCs. For cases in which monoterpenes were present at detectable levels, the methods appeared to adequately capture the majority of speciated compounds. This was not the case for hardwood dryers. Additional work needs to be conducted to develop a set of test methods that will more fully characterize emissions.

REFERENCES

Carlson, F. E., Phillips, E. K., Tenhaeff, S. C., and Detlefsen, W. D. 1995. A study of formaldehyde and other organic emissions from pressing of laboratory oriented strandboard. *Forest Products Journal* 45(3):71.

Environmental Protection Agency (EPA). 1983. Control techniques for organic emissions from plywood veneer dryers. EPA-450/3-83-012. Research Triangle Park, N.C.:U.S. Environmental Protection Agency.

_____. 1989. Evaluation of emission control devices at waferboard plants. EPA-450/3-90-002. Research Triangle Park, N.C.:U.S. Environmental Protection Agency.

Environmental Risk Limited and C.T. Donovan Associates, Inc. 1992. Wood products in the waste stream: characterization and combustion emissions. The New York State Energy Research and Development Authority. Energy Authority Report 92-8, Vol. 1.

Fengel. D. and Wegener, G. 1989. *Wood - chemistry, ultrastructure, reactions*. New York:Walter de Gruyter.

Jennings, M. S., Krohn, N. E., Berry, R. S., Palazzolo, M. A. Parks, R. M., and Fidler, K. K. 1985. Catalytic incineration for control of volatile organic compound emissions. *Pollution Technology Review No. 121. New Jersey:Noyes Publications*

National Council of the Paper Industry for Air and Stream Improvement, Inc. (NCASI). 1999. *Volatile organic emissions from wood products manufacturing facilities, part VII - test methods, quality assurance/quality control procedures, and data analysis protocols.* Technical Bulletin No. 774. Research Triangle Park, N.C.:National Council of the Paper Industry for Air and Stream Improvement, Inc.

APPENDIX A

DATA CALCULATION PROCEDURES

1.0 DATA HANDLING PROCEDURES

To maintain uniform handling of data, a detailed data analysis protocol was developed. The data analysis protocol addressed issues such as (1) treatment of suspect data, (2) merging of impinger and canister results, (3) calculation of quantitation limits, (4) calculations from duplicate analyses, (5) calculations from duplicate samples, (6) merging of data from multiple samples when some of the samples gave non-detect concentrations, (7) method bias correction, (8) calculation of source emission rates, (9) calculation of total HAPs, and (10) data review for completeness and accuracy. These procedures are described in the following sections.

1.1 Merging of Impinger and Canister Results

For the water-soluble compounds, the largest fraction of the impinger/canister split is generally found in the impinger contents. But, because the canister analysis is more sensitive, situations arise where the canister analysis produces a detect value and the impinger analysis produces an impinger non-detect value (which is defined as the method detection limit). In this case, the impinger non-detect value is added to the canister value to yield the total mass of analyte collected in the sample. These results were flagged with "IM," but were treated the same as the unflagged results in all calculation procedures. This situation can also happen in reverse, with the impinger producing a detect value and the canister producing a canister non-detect value (which is defined as the method minimum level), although this is the less common situation. In this case, the non-detected canister value is treated as zero, so the total mass of analyte collected in the sample is equal to the impinger result. If both the canister and impinger results are non-detect, then the two non-detect values are added to yield the non-detect level for the analyte.

If the impinger result for any of the analytes was below the practical quantitation limit, but above the method detection limit, then the results from that run were flagged with "BP." Results flagged with BP were treated the same as unflagged results in all calculation procedures.

1.2 Treatment of Suspect Data

Data which were suspect because of known or suspected sampling or analytical problems were not used in the calculation of source emission rates and were not included in the data summary tables in Appendix B of these reports.

1.3 Quantitation Limits

The impinger/canister method detection limits used in this study for the HAP analytes are given in Table A1. These are the same as the detection limits given in the data tables.

Table A1. Detection Limits for the Impinger/Canister Method	
HAP Analyte	Method Detection Limit, ppmv
acetaldehyde	0.26*
acrolein	0.16*
benzene	0.10**
bromomethane	0.10**
chloroethane	0.10**
cumene	0.10**
1,2-dichloroethane	0.10**
formaldehyde	0.13**
methanol	0.35*
methyl ethyl ketone	0.16*
methyl isobutyl ketone	0.09*
methylene chloride	0.10**
phenol	0.21*
propionaldehyde	0.18*
styrene	0.10*
toluene	0.10**
1,2,4-trichlorobenzene	0.10**
m,p-xylene	0.10**
o-xylene	0.10**

*based on a total impinger catch volume of 75 mL
**based on a 2:1 dilution of the canister sample

The impinger/canister method detection limits (MDL) or minimum levels (ML) for the non-HAP analytes are listed in Table A2.

Table A2. Method Detection Limits for Non-HAP Analytes		
Non-HAP Analyte	Limit Type	Limit, ppmv
acetone	MDL	0.18
camphene	ML	1.0
3-carene	ML	1.0
p-cymene	ML	1.0
cis-1,2-dichloroethylene	ML	1.0
limonene	ML	1.0
p-mentha-1,5-diene	ML	1.0
alpha-pinene	ML	1.0
beta-pinene	ML	1.0

The method detection limits used in this study for the NCASI GC/FID process liquid analysis method are given in Table A3.

The practical quantitation limit for the NCASI WCRC liquid analyses for volatiles, semi-volatile and glycol ethers are given in Table A4.

Table A3. Method Detection Limits for Process Liquid Analysis by GC/FID	
Compound	MDL, mg/L
acetaldehyde	0.15
acetone	0.14
acrolein	0.12
methanol	0.15
methyl ethyl ketone	0.15
methyl isobutyl ketone	0.12
phenol	0.26
propionaldehyde	0.14

Table A4. Practical Quantitation Limits for Liquid Analyses by GC/MS			
Compound	Practical Quantitation Limit (mg/L)	Compound	Practical Quantitation Limit (mg/L)
VOLATILES		2,24-trimethylepentane	26
acetonitrile	40	vinyl acetate	29
acrolein	123	vinyl chloride	20
allyl chloride	26.8	m-xylene / p-xylene*	20
benzene	20	o-xylene	20
1,3-butadiene	27.6	SEMI-VOLATILES/CHLOROPHENOLS	
2-butanone	20	acetophenone	10
carbon disulfide	24.7	2-acetylaminofluorene	10
carbon tetrachloride	20	biphenyl	10
chlorobenzene	20	bis(2-chloroisopropyl)ether	10
chloroethane	20	bis(2-ethylhexyl)phthalate	10
chloroform	20	2-chloroacetophenone	10
chloromethane	20	m-cresol	10
1,2-dibromo-3-chloropropane	20	o-cresol	10
1,2-dibromoethane	20	p-cresol	10
dibromomethane	20	di-n-butylphthalate	10
1,1-dichloroethane	20	dibenzofuran	10
1,2-dichloroethane	20	1,4-dichlorobenzene	10
1,1-dichloroethene	20	p-dimethylaminoazobenzene	10
1,2-dichloropropane	20	dimethylphthalate	10
cis-1,3-dichloropropene	20	hexachlorobenzene	10
trans-1,3-dichloropropene	20	hexachlorobutadiene	10
1,4-dioxane	20	hexachloroethane	10
ethyl acrylate	23.4	isophorone	10
ethylbenzene	20	naphthalene	10
n-hexane	25.4	nitrobenzene	10
iodomethane	26.7	pentachlorophenol	10
isopropyl benzene	20	phenol	10
methyl methacrylate	20	1,2,4-trichlorobenzene	10
4-methyl-2-pentanone	20	2,4,5-trichlorophenol	10
methyl-t-butyl-ether	28.4	2,4,6-trichlorophenol	10
methylene chloride	20	GLYCOL ETHERS	
naphthalene	20	2-butoxyethanol	0.1
propionaldehyde	121.8	2-(2-butoxyethoxy)ethanol	0.1
styrene	20	1,2-dimethoxyethane/2-ethoxyethanol*	0.1
1,1,2,2-tetrachloroethane	20	diphenoxyethane	0.1
tetrachloroethane	20	2-ethoxyethanol	0.1
toluene	20	2-(2-ethoxyethoxy)ethanol	0.1
1,2,4-trichlorobenzene	20	2-[2-(2-ethoxyethoxy)ethoxy]ethanol	0.3
1,1,1-trichloroethane	20	methoxy-2-propanol	0.1
1,1,2-trichloroethane	20	2-(methoxyethoxy)ethanol	0.1
trichloroethane	20	2-phenoxyethanol	0.1

*These compounds were not chromatographically separated.

1.4 Duplicate Analyses

When duplicate analyses using the same analytical procedure were performed on a sample, the duplicate results were averaged to obtain a single value for use in the source emission summary table.

1.5 Duplicate Samples

When duplicate samples were collected (e.g., two canisters collected simultaneously with separate sample trains), the results of the duplicate samples were averaged to create a single value for use in the summary table. Duplicate analysis results were averaged before the duplicate sample results were averaged.

1.6 Data Sets Containing Values Less Than the Quantitation Limit

The following rules were used for the averaging of multiple test runs when one or more of the test runs contained values less than the method detection limit (MDL). When the concentration of an analyte was below the method detection limit for all the runs on a given source, the average analyte concentration from that source was reported as non-detect (ND) at the average ND value.

When at least one run produced an amount of a compound above the MDL, the average for those runs was calculated by averaging the measured amount with any non-detects, using the value of zero for non-detects. For example, if the practical quantitation limit was 5.0 ppbv, and the three run data were 6.0 ppbv, 5.5 ppbv, and ND, the values 6.0, 5.5, and 0 would be averaged to give an average concentration of 3.8 ppbv.

1.7 Correction Factors

Analysis of the run spike recovery data for the Wood Products MACT Study yielded the results contained in Table A-5. Run spike recoveries for methanol and formaldehyde, the predominant HAPs measured in vents from the sources tested in this study, were close to 100 percent, and recoveries for the other spiked compounds (except toluene, which averaged 75%) ranged between 83 and 107%. Because of this, it was determined that use of correction factors on the data obtained from the study would not significantly affect the total HAP emission rates.

Table A5. Run Spike Recovery Data			
Compound	No. of Valid Run Spikes*	Recovery, %	Standard Deviation, %
Acetaldehyde	195	88.8	36.0
Acrolein	153	106.6	59.9
1,2-Dichloromethane	217	87.4	32.0
Formaldehyde	186	99.3	21.3
Methanol	164	102.8	25.2
Methyl Ethyl Ketone	208	100.3	15.3
Methylene Chloride	217	90.8	28.1
Methyl Isobutyl Ketone	207	100.4	24.4
Phenol	208	92.5	24.9
Propionaldehyde	205	83.3	32.4
Toluene	217	74.9	33.8

*Run recoveries were not used if the concentration in the unspiked paired sample was equal to or greater than the spike concentration.

1.8 Calculation of Source Emission Rates

The vent gas concentrations were multiplied by the measured vent gas flow rates to determine the source emission rates (lb/hr). The calculated emission rates were normalized by dividing the emission rate by the unit production/throughput rate in MSF (basis thickness) or ODT to obtain the final results lb/MSF (basis thickness) or lb/ODT. The mass emission rates for individual compounds were calculated by using the molecular weights of the specific compound. For calculating the mass emission rates of VOCs via the total hydrocarbon analysis, the molecular weight of carbon (12 g/mole) was used and the emissions were reported as lb C/hr and either lb C/MSF (basis thickness) or lb C/ODT.

1.9 Calculation of Total HAPs and Total Terpenes

The average emission rates for each HAP compound from a source were added together as follows to determine total HAP emission rates. When the average emission rate for an individual compound was reported as above the method detection limit (i.e. at least one run had a concentration level above the detection limit), the compound was added at the reported average emission rate. When the average emission rate for the HAP compound was reported as non-detect (ND) that compound was not included in the HAP calculation to determine total HAPs or total terpenes. If all of the HAPs or terpenes were non-detected, then the total HAPs or total terpenes were reported as zero.

1.10 Data Flow/Validation

The validation of emission measurement data was an interactive process involving a review of quality control data, chromatography data, calculations, and data transfer and entry operations. Certain validation operations were performed in the field, while other validation operations were performed after the initial data set was compiled. The following subsections describe some of the procedures associated with the various data validation and review operations.

1.10.1 *Review of Field Data for Completeness and Accuracy*

Individual sample train operators were responsible for the accuracy and completeness of the data sheets they completed during testing operations. Sample train operators were required to obtain authorization to deviate from established procedures and to document the nature of deviations and the reasons why such deviations were necessary. Sample train operators were also responsible for reviewing preliminary field data such as vent gas temperatures, velocities, static pressures, and to note any reasons for inter- or intra-run variability for these parameters. At the completion of each run, sample train operators completed the data sheets and performed some initial calculations. The reduction of measurement data involved the transfer of data from data sheets to spreadsheet applications. It was the responsibility of the individual performing data entry operations to verify the accuracy of data transfers.

1.10.2 *Review of Quality Control Data*

The quality control program associated with the impinger/canister method involved the analysis of calibration check standards, run (canister) spikes, train spikes, certified reference materials, train blanks, and duplicate samples. Additionally, duplicate analyses of aliquots of the same sample were performed. Given the complexity of the sampling and the analytical protocol and the number or target analytes, it was not possible to establish an objective set of acceptance criteria for quality control results. Acceptance of data when targeted acceptance criteria were exceeded was left to the discretion of the analyst, provided the rationale for accepting such data was documented by the analyst.

1.10.3 *Review of Chromatography Data*

After each sample was analyzed, the analyst reviewed the chromatogram and made decisions about the treatment of the chromatographic data. Typically, this review involved an analysis of peak shape, retention times, and mass spectral data. The analyst examined questionable portions of the chromatogram by retrieving the electronic file and enlarging the area of concern. If the peak shape was not consistent with that of the standards, the analyst may have reprocessed the chromatogram to effect a more appropriate reporting of chromatographic data. The rationale for reprocessing chromatographic data was documented by the analyst. In some of the GC/FID analyses of impinger contents, another compound which turned out to be ethanol was found to elute at almost the same time as acrolein. In some of these situations, the peaks couldn't be separated, and "IN" was given as the acrolein result to indicate that there was interference with the acrolein analysis.

An important component of the chromatogram review process involved the evaluation of retention times and mass spectral data. Based on the analysis of check standards, the analyst established acceptable relative retention time windows for target analytes. The mass spectral data were reviewed by the analyst to confirm the compound identities, especially if the retention times changed out of the established windows. If the GC/MSD analysis produced a peak with a calibrated compound's retention time and concentration sufficient for identification, but the calibrated compound's spectra did not match the compound's library spectra, then that peak was not considered the analyte of interest.

If large unknown peaks were encountered while reviewing the chromatograms, a library search was performed to tentatively identify them. This procedure was not performed on a regular basis. No estimates of the concentrations of these compounds were attempted.

1.10.4 *Final Data Review*

All data for each mill were reviewed by the NCASI project manager in charge of sampling at that mill. The data were checked for consistency and reasonableness.

APPENDIX B

DETAILED EMISSION TEST RESULTS

Table B1. Summary of Emission Test Results
Hot Presses, Press Vent (065-1PB1)

Analyte		065-1PB1N1			065-1PB1N2			065-1PB1N3			Average Emission		
			ppmVd	lb/MSF		ppmVd	lb/MSF		ppmVd	lb/MSF		ppmVd	lb/MSF
acetaldehyde	(H)	ND	4.2E-01	3.1E-03	ND	4.5E-01	3.1E-03	ND	4.2E-01	3.0E-03	ND	4.3E-01	3.1E-03
acetone	(N)	IM	4.6E-01	4.5E-03	IM	5.0E-01	4.6E-03	IM	3.6E-01	3.4E-03		4.4E-01	4.2E-03
acrolein	(H)	ND	3.0E-01	2.8E-03	ND	3.1E-01	2.8E-03	ND	3.0E-01	2.7E-03	ND	3.0E-01	2.8E-03
benzene	(H)	ND	8.7E-02	1.1E-03	ND	8.3E-02	1.0E-03	ND	8.7E-02	1.1E-03	ND	8.5E-02	1.1E-03
bromomethane	(H)	ND	8.7E-02	1.4E-03	ND	8.3E-02	1.2E-03	ND	8.7E-02	1.3E-03	ND	8.5E-02	1.3E-03
camphene		ND	1.7E+00	4.0E-02	ND	1.7E+00	3.6E-02	ND	1.7E+00	3.8E-02	ND	1.7E+00	3.8E-02
3-carene		ND	1.7E+00	4.0E-02	ND	1.7E+00	3.6E-02	ND	1.7E+00	3.8E-02	ND	1.7E+00	3.8E-02
chloroethane	(H)	ND	8.7E-02	9.4E-04	ND	8.3E-02	8.4E-04	ND	8.7E-02	9.1E-04	ND	8.5E-02	9.0E-04
chloroethene	(H)	ND	8.7E-02	9.1E-04	ND	8.3E-02	8.2E-04	ND	8.7E-02	8.8E-04	ND	8.5E-02	8.7E-04
cumene	(H)	ND	1.7E+00	3.5E-02	ND	1.7E+00	3.1E-02	ND	1.7E+00	3.4E-02	ND	1.7E+00	3.4E-02
p-cymene		ND	1.7E+00	3.9E-02	ND	1.7E+00	3.5E-02	ND	1.7E+00	3.8E-02	ND	1.7E+00	3.7E-02
1,2-dichloroethane	(H)	ND	8.7E-02	1.4E-03	ND	8.3E-02	1.3E-03	ND	8.7E-02	1.4E-03	ND	8.5E-02	1.4E-03
cis-1,2-dichloroethylene		ND	8.7E-02	1.4E-03	ND	8.3E-02	1.3E-03	ND	8.7E-02	1.4E-03	ND	8.5E-02	1.4E-03
formaldehyde	(H)		1.8E+00	8.9E-03		2.4E+00	1.1E-02		1.3E+00	6.4E-03		1.8E+00	8.8E-03
limonene		ND	1.7E+00	4.0E-02	ND	1.7E+00	3.6E-02	ND	1.7E+00	3.8E-02	ND	1.7E+00	3.8E-02
p-mentha-1,5-diene		ND	1.7E+00	4.0E-02	ND	1.7E+00	3.6E-02	ND	1.7E+00	3.8E-02	ND	1.7E+00	3.8E-02
methanol	(H)		8.7E+00	4.7E-02		1.7E+01	8.6E-02		1.3E+01	6.9E-02		1.3E+01	6.7E-02
methyl ethyl ketone (MEK)	(H)	ND	2.9E-01	3.6E-03	ND	3.1E-01	3.5E-03	ND	2.9E-01	3.4E-03	ND	3.0E-01	3.5E-03
methyl isobutyl ketone	(H)	ND	2.1E-01	3.5E-03	ND	2.1E-01	3.4E-03	ND	2.0E-01	3.3E-03	ND	2.1E-01	3.4E-03
methylene chloride	(H)	ND	8.7E-02	1.2E-03	ND	8.3E-02	1.1E-03	ND	8.7E-02	1.2E-03	ND	8.5E-02	1.2E-03
phenol	(H)	BP	5.7E-01	9.0E-03	BP	6.0E-01	8.9E-03	BP	4.7E-01	7.1E-03		5.4E-01	8.3E-03
alpha-pinene		ND	1.7E+00	4.0E-02	ND	1.7E+00	3.6E-02	ND	1.7E+00	3.8E-02	ND	1.7E+00	3.8E-02
beta-pinene		ND	1.7E+00	4.0E-02	ND	1.7E+00	3.6E-02	ND	1.7E+00	3.8E-02	ND	1.7E+00	3.8E-02
propionaldehyde	(H)	ND	3.2E-01	3.2E-03	ND	3.4E-01	3.2E-03	ND	3.2E-01	3.1E-03	ND	3.3E-01	3.1E-03
styrene	(H)	ND	8.7E-02	1.5E-03	ND	8.3E-02	1.4E-03	ND	8.7E-02	1.5E-03	ND	8.5E-02	1.5E-03
toluene	(H)	ND	8.7E-02	1.3E-03	ND	8.3E-02	1.2E-03	ND	8.7E-02	1.3E-03	ND	8.5E-02	1.3E-03
1,2,4-trichlorobenzene	(H)	ND	8.7E-02	2.7E-03	ND	8.3E-02	2.4E-03	ND	8.7E-02	2.6E-03	ND	8.5E-02	2.5E-03
m,p-xylene	(H)	ND	8.7E-02	1.6E-03	ND	8.3E-02	1.4E-03	ND	8.7E-02	1.5E-03	ND	8.5E-02	1.5E-03
o-xylene	(H)	ND	8.7E-02	1.6E-03	ND	8.3E-02	1.4E-03	ND	8.7E-02	1.5E-03	ND	8.5E-02	1.5E-03
THC as Carbon			3.4E+01	6.9E-02		3.8E+01	7.3E-02		3.7E+01	7.2E-02		3.6E+01	7.1E-02
Total HAPs				6.5E-02			1.1E-01			8.2E-02			8.5E-02
Total Terpenes				0.0E+00			0.0E+00			0.0E+00			0.0E+00
Production Rate (MSF 3/8 /hr)				19.8			22.6			20.7			21.0
Vol. Flow Rate (DSCFM)				2.1E+04			2.3E+04			2.2E+04			2.2E+04
Source Moisture (%)				2.1			2.2			2.1			2.1
Source Temp (°C)				38.2			41.1			41.3			40.2

ND x.xxEx = Below detection limit of x.xxEx; BP = Below practical quantitation limit; IM = Below detection limit in impinger sample; NA = Not analyzed by this method; H = CAA HAP; N = Not a HAP or VOC as defined by US EPA; TM = Start and end times for THC and speciated compounds differ; QA = Failed quality assurance; MSF = 1000 square feet; ODTH = Oven Dried Tons per Hour; AI = Analytical Interference; MLF = 1000 Linear Feet; MCF = 1000 Cubic Feet

12/9/99
9:08 AM

Table B2. Summary of Emission Test Results
Softwood Veneer Dryer, Dryer No. 2, Dry End Vent, Douglas Fir Furnish (112-2DV5)

Analyte		112-2DV5N1			112-2DV5N2			112-2DV5N3			Average Emission		
			ppmVd	lb/MSF		ppmVd	lb/MSF		ppmVd	lb/MSF		ppmVd	lb/MSF
acetaldehyde	(H)		1.3E+00	1.0E-02		3.3E+00	2.5E-02		1.9E+00	1.5E-02		2.2E+00	1.7E-02
acetone	(N)	BP	4.2E-01	4.3E-03	BP	6.8E-01	7.0E-03	BP	4.3E-01	4.5E-03		5.1E-01	5.3E-03
acrolein	(H)	ND	2.6E-01	2.6E-03	ND	2.7E-01	2.7E-03	ND	2.7E-01	2.7E-03	ND	2.7E-01	2.7E-03
benzene	(H)	ND	8.6E-02	1.2E-03	ND	8.7E-02	1.2E-03	ND	8.7E-02	1.2E-03	ND	8.7E-02	1.2E-03
bromomethane	(H)	ND	8.6E-02	1.4E-03	ND	8.7E-02	1.4E-03	ND	8.7E-02	1.5E-03	ND	8.7E-02	1.5E-03
camphene		ND	1.7E+00	4.1E-02	ND	1.7E+00	4.2E-02	ND	1.7E+00	4.3E-02	ND	1.7E+00	4.2E-02
3-carene		ND	1.7E+00	4.1E-02	ND	1.7E+00	4.2E-02	ND	1.7E+00	4.3E-02	ND	1.7E+00	4.2E-02
chloroethane	(H)	ND	8.6E-02	9.7E-04	ND	8.7E-02	9.8E-04	ND	8.7E-02	1.0E-03	ND	8.7E-02	9.9E-04
chloroethene	(H)	ND	8.6E-02	9.4E-04	ND	8.7E-02	9.5E-04	ND	8.7E-02	9.8E-04	ND	8.7E-02	9.6E-04
cumene	(H)	ND	1.7E+00	3.6E-02	ND	1.7E+00	3.7E-02	ND	1.7E+00	3.8E-02	ND	1.7E+00	3.7E-02
p-cymene		ND	1.7E+00	4.1E-02	ND	1.7E+00	4.1E-02	ND	1.7E+00	4.2E-02	ND	1.7E+00	4.1E-02
1,2-dichloroethane	(H)	ND	8.6E-02	1.5E-03	ND	8.7E-02	1.5E-03	ND	8.7E-02	1.6E-03	ND	8.7E-02	1.5E-03
cis-1,2-dichloroethylene		ND	8.6E-02	1.5E-03	ND	8.7E-02	1.5E-03	ND	8.7E-02	1.5E-03	ND	8.7E-02	1.5E-03
formaldehyde	(H)		9.0E-01	4.8E-03		7.8E-01	4.1E-03		1.3E+00	7.3E-03		1.0E+00	5.4E-03
limonene		ND	1.7E+00	4.1E-02	ND	1.7E+00	4.2E-02	ND	1.7E+00	4.3E-02	ND	1.7E+00	4.2E-02
p-mentha-1,5-diene		ND	1.7E+00	4.1E-02	ND	1.7E+00	4.2E-02	ND	1.7E+00	4.3E-02	ND	1.7E+00	4.2E-02
methanol	(H)		2.6E+00	1.4E-02		3.4E+00	1.9E-02		2.8E+00	1.6E-02		2.9E+00	1.7E-02
methyl ethyl ketone (MEK)	(H)	ND	2.6E-01	3.3E-03	ND	2.6E-01	3.4E-03	ND	2.7E-01	3.5E-03	ND	2.6E-01	3.4E-03
methyl isobutyl ketone	(H)	ND	1.8E-01	3.2E-03	ND	1.9E-01	3.3E-03	ND	1.9E-01	3.4E-03	ND	1.9E-01	3.3E-03
methylene chloride	(H)	ND	8.6E-02	1.3E-03	ND	8.7E-02	1.3E-03	ND	8.7E-02	1.3E-03	ND	8.7E-02	1.3E-03
phenol	(H)	ND	3.1E-01	5.2E-03	ND	3.2E-01	5.3E-03	ND	3.3E-01	5.5E-03	ND	3.2E-01	5.3E-03
alpha-pinene			8.8E+00	2.1E-01		7.4E+00	1.8E-01		5.5E+00	1.3E-01		7.2E+00	1.7E-01
beta-pinene		ND	1.7E+00	4.1E-02	ND	1.7E+00	4.2E-02	ND	1.7E+00	4.3E-02	ND	1.7E+00	4.2E-02
propionaldehyde	(H)	ND	2.8E-01	2.9E-03	ND	2.9E-01	3.0E-03	ND	3.0E-01	3.1E-03	ND	2.9E-01	3.0E-03
styrene	(H)	ND	8.6E-02	1.6E-03	ND	8.7E-02	1.6E-03	ND	8.7E-02	1.6E-03	ND	8.7E-02	1.6E-03
toluene	(H)	ND	8.6E-02	1.4E-03	ND	8.7E-02	1.4E-03	ND	8.7E-02	1.4E-03	ND	8.7E-02	1.4E-03
1,2,4-trichlorobenzene	(H)	ND	8.6E-02	2.7E-03	ND	8.7E-02	2.8E-03	ND	8.7E-02	2.8E-03	ND	8.7E-02	2.8E-03
m,p-xylene	(H)	ND	8.6E-02	1.6E-03	ND	8.7E-02	1.6E-03	ND	8.7E-02	1.7E-03	ND	8.7E-02	1.6E-03
o-xylene	(H)	ND	8.6E-02	1.6E-03	ND	8.7E-02	1.6E-03	ND	8.7E-02	1.7E-03	ND	8.7E-02	1.6E-03
THC as Carbon			2.2E+02	4.7E-01	NA				2.7E+02	5.7E-01		2.4E+02	5.2E-01
Total HAPs				2.9E-02			4.8E-02			3.8E-02			3.9E-02
Total Terpenes				2.1E-01			1.8E-01			1.3E-01			1.7E-01
Production Rate (MSF 3/8 /hr)				9.0			9.0			8.7			8.9
Vol. Flow Rate (DSCFM)				1.0E+04			1.0E+04			1.0E+04			1.0E+04
Source Moisture (%)				9.4			11.5			11.8			10.9
Source Temp (°C)				141.3			142.2			142.8			142.1

ND x.xxEx = Below detection limit of x.xxEx; BP = Below practical quantitation limit; IM = Below detection limit in impinger sample; NA = Not analyzed by this method; H = CAA HAP; N = Not a HAP or VOC as defined by US EPA; TM = Start and end times for THC and speciated compounds differ; QA = Failed quality assurance; MSF = 1000 square feet; ODTH = Oven Dried Tons per Hour; AI = Analytical Interference; MLF = 1000 Linear Feet; MCF = 1000 Cubic Feet

Table B3. Summary of Emission Test Results
Softwood Veneer Dryer, Dryer No. 2, Green End Vent, Douglas Fir Furnish (112-2DV6)

Analyte		112-2DV6N1			112-2DV6N2			112-2DV6N3			Average Emission		
			ppmVd	lb/MSF		ppmVd	lb/MSF		ppmVd	lb/MSF		ppmVd	lb/MSF
acetaldehyde	(H)		1.9E+00	4.9E-03	BP	6.2E-01	1.2E-03		3.7E+00	8.3E-03		2.1E+00	4.8E-03
acetone	(N)		1.2E+00	4.0E-03	BP	6.5E-01	1.7E-03	BP	6.2E-01	1.8E-03		8.2E-01	2.5E-03
acrolein	(H)	ND	3.3E-01	1.1E-03	ND	3.4E-01	8.6E-04	ND	3.4E-01	9.5E-04	ND	3.4E-01	9.6E-04
benzene	(H)	ND	8.7E-02	3.9E-04	ND	9.1E-02	3.2E-04	ND	8.8E-02	3.4E-04	ND	8.9E-02	3.5E-04
bromomethane	(H)	ND	8.7E-02	4.8E-04	ND	9.1E-02	3.9E-04	ND	8.8E-02	4.2E-04	ND	8.9E-02	4.3E-04
camphene		ND	1.7E+00	1.4E-02	ND	1.8E+00	1.1E-02	ND	1.8E+00	1.2E-02	ND	1.8E+00	1.2E-02
3-carene		ND	1.7E+00	1.4E-02	ND	1.8E+00	1.1E-02	ND	1.8E+00	1.2E-02	ND	1.8E+00	1.2E-02
chloroethane	(H)	ND	8.7E-02	3.3E-04	ND	9.1E-02	2.6E-04	ND	8.8E-02	2.8E-04	ND	8.9E-02	2.9E-04
chloroethene	(H)	ND	8.7E-02	3.2E-04	ND	9.1E-02	2.6E-04	ND	8.8E-02	2.8E-04	ND	8.9E-02	2.8E-04
cumene	(H)	ND	1.7E+00	1.2E-02	ND	1.8E+00	9.8E-03	ND	1.8E+00	1.1E-02	ND	1.8E+00	1.1E-02
p-cymene		ND	1.7E+00	1.4E-02	ND	1.8E+00	1.1E-02	ND	1.8E+00	1.2E-02	ND	1.8E+00	1.2E-02
1,2-dichloroethane	(H)	ND	8.7E-02	5.0E-04	ND	9.1E-02	4.1E-04	ND	8.8E-02	4.4E-04	ND	8.9E-02	4.5E-04
cis-1,2-dichloroethylene		ND	8.7E-02	4.9E-04	ND	9.1E-02	4.0E-04	ND	8.8E-02	4.3E-04	ND	8.9E-02	4.4E-04
formaldehyde	(H)		7.7E-01	1.3E-03	BP	4.4E-01	5.9E-04		8.3E-01	1.3E-03		6.8E-01	1.1E-03
limonene		ND	1.7E+00	1.4E-02	ND	1.8E+00	1.1E-02	ND	1.8E+00	1.2E-02	ND	1.8E+00	1.2E-02
p-mentha-1,5-diene		ND	1.7E+00	1.4E-02	ND	1.8E+00	1.1E-02	ND	1.8E+00	1.2E-02	ND	1.8E+00	1.2E-02
methanol	(H)		5.9E+00	1.1E-02		5.8E+00	8.4E-03		5.8E+00	9.4E-03		5.8E+00	9.6E-03
methyl ethyl ketone (MEK)	(H)	ND	3.2E-01	1.4E-03	ND	3.3E-01	1.1E-03	ND	3.3E-01	1.2E-03	ND	3.3E-01	1.2E-03
methyl isobutyl ketone	(H)	ND	2.2E-01	1.3E-03	ND	2.3E-01	1.0E-03	ND	2.3E-01	1.1E-03	ND	2.3E-01	1.2E-03
methylene chloride	(H)	ND	8.7E-02	4.3E-04	ND	9.1E-02	3.5E-04	ND	8.8E-02	3.7E-04	ND	8.9E-02	3.8E-04
phenol	(H)	ND	4.0E-01	2.2E-03	ND	4.1E-01	1.8E-03	ND	4.1E-01	1.9E-03	ND	4.1E-01	2.0E-03
alpha-pinene			2.3E+01	1.8E-01		1.8E+01	1.1E-01		1.4E+01	9.3E-02		1.8E+01	1.3E-01
beta-pinene			2.6E+00	2.0E-02		2.3E+00	1.4E-02	ND	1.8E+00	1.2E-02		1.6E+00	1.1E-02
propionaldehyde	(H)	ND	3.6E-01	1.2E-03	ND	3.7E-01	9.8E-04	ND	3.7E-01	1.1E-03	ND	3.7E-01	1.1E-03
styrene	(H)	ND	8.7E-02	5.2E-04	ND	9.1E-02	4.3E-04	ND	8.8E-02	4.6E-04	ND	8.9E-02	4.7E-04
toluene	(H)	ND	8.7E-02	4.6E-04	ND	9.1E-02	3.8E-04	ND	8.8E-02	4.1E-04	ND	8.9E-02	4.2E-04
1,2,4-trichlorobenzene	(H)	ND	8.7E-02	9.1E-04	ND	9.1E-02	7.4E-04	ND	8.8E-02	8.0E-04	ND	8.9E-02	8.2E-04
m,p-xylene	(H)	ND	8.7E-02	5.4E-04	ND	9.1E-02	4.3E-04	ND	8.8E-02	4.7E-04	ND	8.9E-02	4.8E-04
o-xylene	(H)	ND	8.7E-02	5.4E-04	ND	9.1E-02	4.3E-04	ND	8.8E-02	4.7E-04	ND	8.9E-02	4.8E-04
THC as Carbon		NA				3.8E+02	2.1E-01		3.0E+02	1.8E-01		3.4E+02	1.9E-01
Total HAPs				1.7E-02			1.0E-02			1.9E-02			1.5E-02
Total Terpenes				2.0E-01			1.2E-01			9.3E-02			1.4E-01
Production Rate (MSF 3/8 /hr)				9.0			9.0			8.7			8.9
Vol. Flow Rate (DSCFM)				3.3E+03			2.6E+03			2.8E+03			2.9E+03
Source Moisture (%)				18.4			19.8			20.9			19.7
Source Temp (°C)				131.9			125.3			124.2			127.1

ND x.xxEx = Below detection limit of x.xxEx; BP = Below practical quantitation limit; IM = Below detection limit in impinger sample; NA = Not analyzed by this method; H = CAA HAP; N = Not a HAP or VOC as defined by US EPA; TM = Start and end times for THC and speciated compounds differ; QA = Failed quality assurance; MSF = 1000 square feet; ODTH = Oven Dried Tons per Hour; AI = Analytical Interference; MLF = 1000 Linear Feet; MCF = 1000 Cubic Feet

12/9/99
9:08 AM

Table B4. Summary of Emission Test Results
Softwood Veneer Dryer, Dryer No. 2, Veneer Cooling Section Exhaust No. 2 (112-2DV3)

Analyte		112-2DV3N1			112-2DV3N2			112-2DV3N3			Average Emission		
			ppmVd	lb/MSF		ppmVd	lb/MSF		ppmVd	lb/MSF		ppmVd	lb/MSF
acetaldehyde	(H)	ND	4.1E-01	4.4E-03	BP	4.5E-01	2.7E-02	ND	4.7E-01	4.6E-03		1.5E-01	9.0E-03
acetone	(N)	IM	4.6E-01	6.5E-03	IM	4.4E-01	3.5E-02	IM	4.1E-01	5.3E-03		4.4E-01	1.6E-02
acrolein	(H)	ND	2.9E-01	4.0E-03	ND	2.9E-01	2.2E-02	ND	3.3E-01	4.1E-03	ND	3.0E-01	1.0E-02
benzene	(H)	ND	8.9E-02	1.7E-03	ND	9.6E-02	1.0E-02	ND	8.5E-02	1.5E-03	ND	9.0E-02	4.5E-03
bromomethane	(H)	ND	8.9E-02	2.1E-03	ND	9.6E-02	1.3E-02	ND	8.5E-02	1.8E-03	ND	9.0E-02	5.5E-03
camphene		ND	1.8E+00	5.9E-02	ND	1.9E+00	3.6E-01	ND	1.7E+00	5.1E-02	ND	1.8E+00	1.6E-01
3-carene		ND	1.8E+00	5.9E-02	ND	1.9E+00	3.6E-01	ND	1.7E+00	5.1E-02	ND	1.8E+00	1.6E-01
chloroethane	(H)	ND	8.9E-02	1.4E-03	ND	9.6E-02	8.5E-03	ND	8.5E-02	1.2E-03	ND	9.0E-02	3.7E-03
chloroethene	(H)	ND	8.9E-02	1.4E-03	ND	9.6E-02	8.3E-03	ND	8.5E-02	1.2E-03	ND	9.0E-02	3.6E-03
cumene	(H)	ND	1.8E+00	5.2E-02	ND	1.9E+00	3.2E-01	ND	1.7E+00	4.5E-02	ND	1.8E+00	1.4E-01
p-cymene		ND	1.8E+00	5.9E-02	ND	1.9E+00	3.5E-01	ND	1.7E+00	5.1E-02	ND	1.8E+00	1.5E-01
1,2-dichloroethane	(H)	ND	8.9E-02	2.2E-03	ND	9.6E-02	1.3E-02	ND	8.5E-02	1.9E-03	ND	9.0E-02	5.7E-03
cis-1,2-dichloroethylene		ND	8.9E-02	2.1E-03	ND	9.6E-02	1.3E-02	ND	8.5E-02	1.8E-03	ND	9.0E-02	5.6E-03
formaldehyde	(H)	ND	1.6E-01	1.2E-03	ND	1.5E-01	6.2E-03	ND	1.9E-01	1.3E-03	ND	1.6E-01	2.9E-03
limonene		ND	1.8E+00	5.9E-02	ND	1.9E+00	3.6E-01	ND	1.7E+00	5.1E-02	ND	1.8E+00	1.6E-01
p-mentha-1,5-diene		ND	1.8E+00	5.9E-02	ND	1.9E+00	3.6E-01	ND	1.7E+00	5.1E-02	ND	1.8E+00	1.6E-01
methanol	(H)	ND	5.3E-01	4.2E-03	BP	7.5E-01	3.3E-02	ND	6.1E-01	4.4E-03		2.5E-01	1.1E-02
methyl ethyl ketone (MEK)	(H)	ND	2.8E-01	5.0E-03	ND	2.8E-01	2.8E-02	ND	3.2E-01	5.1E-03	ND	3.0E-01	1.3E-02
methyl isobutyl ketone	(H)	ND	2.0E-01	5.0E-03	BP	2.7E-01	3.7E-02	ND	2.2E-01	4.9E-03		9.1E-02	1.2E-02
methylene chloride	(H)	ND	8.9E-02	1.9E-03	ND	9.6E-02	1.1E-02	ND	8.5E-02	1.6E-03	ND	9.0E-02	4.9E-03
phenol	(H)	ND	3.5E-01	8.0E-03	ND	3.5E-01	4.5E-02	ND	3.9E-01	8.3E-03	ND	3.6E-01	2.0E-02
alpha-pinene		ND	1.8E+00	5.9E-02	ND	1.9E+00	3.6E-01	ND	1.7E+00	5.1E-02	ND	1.8E+00	1.6E-01
beta-pinene		ND	1.8E+00	5.9E-02	ND	1.9E+00	3.6E-01	ND	1.7E+00	5.1E-02	ND	1.8E+00	1.6E-01
propionaldehyde	(H)	ND	3.2E-01	4.5E-03	ND	3.1E-01	2.5E-02	ND	3.6E-01	4.6E-03	ND	3.3E-01	1.1E-02
styrene	(H)	ND	8.9E-02	2.3E-03	ND	9.6E-02	1.4E-02	ND	8.5E-02	2.0E-03	ND	9.0E-02	6.0E-03
toluene	(H)	ND	8.9E-02	2.0E-03	ND	9.6E-02	1.2E-02	ND	8.5E-02	1.7E-03	ND	9.0E-02	5.3E-03
1,2,4-trichlorobenzene	(H)	ND	8.9E-02	4.0E-03	ND	9.6E-02	2.4E-02	ND	8.5E-02	3.4E-03	ND	9.0E-02	1.0E-02
m,p-xylene	(H)	ND	8.9E-02	2.3E-03	ND	9.6E-02	1.4E-02	ND	8.5E-02	2.0E-03	ND	9.0E-02	6.1E-03
o-xylene	(H)	ND	8.9E-02	2.3E-03	ND	9.6E-02	1.4E-02	ND	8.5E-02	2.0E-03	ND	9.0E-02	6.1E-03
THC as Carbon		NA			TM	1.4E+01	2.2E-01		3.4E+00	9.0E-03		8.5E+00	1.2E-01
Total HAPs				0.0E+00			9.8E-02			0.0E+00			3.3E-02
Total Terpenes				0.0E+00			0.0E+00			0.0E+00			0.0E+00
Production Rate (MSF 3/8 /hr)				8.0			1.5			8.8			6.1
Vol. Flow Rate (DSCFM)				1.3E+04			1.3E+04			1.3E+04			1.3E+04
Source Moisture (%)				1.5			1.4			1.7			1.5
Source Temp (°C)				38.7			41.2			41.4			40.4

ND x.xxEx = Below detection limit of x.xxEx; BP = Below practical quantitation limit; IM = Below detection limit in impinger sample; NA = Not analyzed by this method; H = CAA HAP; N = Not a HAP or VOC as defined by US EPA; TM = Start and end times for THC and speciated compounds differ; QA = Failed quality assurance; MSF = 1000 square feet; ODTH = Oven Dried Tons per Hour; AI = Analytical Interference; MLF = 1000 Linear Feet; MCF = 1000 Cubic Feet

Table B5. Summary of Emission Test Results
Softwood Veneer Dryer, Dryer No. 2, Veneer Cooling Section Exhaust No. 1 (112-2DV4)

Analyte		112-2DV4N1			112-2DV4N2			112-2DV4N3			Average Emission		
			ppmVd	lb/MSF		ppmVd	lb/MSF		ppmVd	lb/MSF		ppmVd	lb/MSF
acetaldehyde	(H)	ND	4.3E-01	1.1E-03	ND	4.0E-01	5.2E-03	ND	4.0E-01	8.6E-04	ND	4.1E-01	2.4E-03
acetone	(N)	IM	4.3E-01	1.4E-03	IM	4.2E-01	7.1E-03	IM	3.3E-01	9.3E-04		3.9E-01	3.1E-03
acrolein	(H)	ND	3.0E-01	9.5E-04	ND	2.9E-01	4.7E-03	ND	2.9E-01	7.8E-04	ND	2.9E-01	2.2E-03
benzene	(H)	ND	9.2E-02	4.0E-04	ND	9.9E-02	2.2E-03	ND	9.2E-02	3.5E-04	ND	9.4E-02	1.0E-03
bromomethane	(H)	ND	9.2E-02	4.9E-04	ND	9.9E-02	2.7E-03	ND	9.2E-02	4.2E-04	ND	9.4E-02	1.2E-03
camphene		ND	1.8E+00	1.4E-02	ND	2.0E+00	7.8E-02	ND	1.8E+00	1.2E-02	ND	1.9E+00	3.5E-02
3-carene		ND	1.8E+00	1.4E-02	ND	2.0E+00	7.8E-02	ND	1.8E+00	1.2E-02	ND	1.9E+00	3.5E-02
chloroethane	(H)	ND	9.2E-02	3.3E-04	ND	9.9E-02	1.9E-03	ND	9.2E-02	2.9E-04	ND	9.4E-02	8.2E-04
chloroethene	(H)	ND	9.2E-02	3.2E-04	ND	9.9E-02	1.8E-03	ND	9.2E-02	2.8E-04	ND	9.4E-02	8.0E-04
cumene	(H)	ND	1.8E+00	1.2E-02	ND	2.0E+00	6.9E-02	ND	1.8E+00	1.1E-02	ND	1.9E+00	3.1E-02
p-cymene		ND	1.8E+00	1.4E-02	ND	2.0E+00	7.7E-02	ND	1.8E+00	1.2E-02	ND	1.9E+00	3.4E-02
1,2-dichloroethane	(H)	ND	9.2E-02	5.1E-04	ND	9.9E-02	2.8E-03	ND	9.2E-02	4.4E-04	ND	9.4E-02	1.3E-03
cis-1,2-dichloroethylene		ND	9.2E-02	5.0E-04	ND	9.9E-02	2.8E-03	ND	9.2E-02	4.3E-04	ND	9.4E-02	1.2E-03
formaldehyde	(H)	ND	1.6E-01	2.7E-04	ND	1.5E-01	1.3E-03	ND	1.5E-01	2.2E-04	ND	1.6E-01	6.0E-04
limonene		ND	1.8E+00	1.4E-02	ND	2.0E+00	7.8E-02	ND	1.8E+00	1.2E-02	ND	1.9E+00	3.5E-02
p-mentha-1,5-diene		ND	1.8E+00	1.4E-02	ND	2.0E+00	7.8E-02	ND	1.8E+00	1.2E-02	ND	1.9E+00	3.5E-02
methanol	(H)	ND	5.5E-01	9.9E-04	BP	8.2E-01	7.6E-03	ND	5.2E-01	8.1E-04		2.7E-01	2.5E-03
methyl ethyl ketone (MEK)	(H)	ND	3.0E-01	1.2E-03	ND	2.9E-01	6.0E-03	ND	2.8E-01	9.8E-04	ND	2.9E-01	2.7E-03
methyl isobutyl ketone	(H)	ND	2.1E-01	1.2E-03	BP	3.3E-01	9.6E-03	ND	2.0E-01	9.8E-04		1.1E-01	3.2E-03
methylene chloride	(H)	ND	9.2E-02	4.4E-04	ND	9.9E-02	2.4E-03	ND	9.2E-02	3.8E-04	ND	9.4E-02	1.1E-03
phenol	(H)	ND	3.6E-01	1.9E-03	ND	3.5E-01	9.5E-03	ND	3.4E-01	1.6E-03	ND	3.5E-01	4.3E-03
alpha-pinene		ND	1.8E+00	1.4E-02	ND	2.0E+00	7.8E-02	ND	1.8E+00	1.2E-02	ND	1.9E+00	3.5E-02
beta-pinene		ND	1.8E+00	1.4E-02	ND	2.0E+00	7.8E-02	ND	1.8E+00	1.2E-02	ND	1.9E+00	3.5E-02
propionaldehyde	(H)	ND	3.3E-01	1.1E-03	ND	3.2E-01	5.3E-03	ND	3.1E-01	8.8E-04	ND	3.2E-01	2.4E-03
styrene	(H)	ND	9.2E-02	5.4E-04	ND	9.9E-02	3.0E-03	ND	9.2E-02	4.6E-04	ND	9.4E-02	1.3E-03
toluene	(H)	ND	9.2E-02	4.8E-04	ND	9.9E-02	2.6E-03	ND	9.2E-02	4.1E-04	ND	9.4E-02	1.2E-03
1,2,4-trichlorobenzene	(H)	ND	9.2E-02	9.4E-04	ND	9.9E-02	5.2E-03	ND	9.2E-02	8.1E-04	ND	9.4E-02	2.3E-03
m,p-xylene	(H)	ND	9.2E-02	5.5E-04	ND	9.9E-02	3.0E-03	ND	9.2E-02	4.7E-04	ND	9.4E-02	1.4E-03
o-xylene	(H)	ND	9.2E-02	5.5E-04	ND	9.9E-02	3.0E-03	ND	9.2E-02	4.7E-04	ND	9.4E-02	1.4E-03
THC as Carbon		NA			NA				4.6E+00	2.7E-03		4.6E+00	2.7E-03
Total HAPs				0.0E+00			1.7E-02			0.0E+00			5.7E-03
Total Terpenes				0.0E+00			0.0E+00			0.0E+00			0.0E+00
Production Rate (MSF 3/8 /hr)				8.0			1.5			8.8			6.1
Vol. Flow Rate (DSCFM)				2.9E+03			2.8E+03			2.7E+03			2.8E+03
Source Moisture (%)				1.3			1.1			1.5			1.3
Source Temp (°C)				49.4			51.0			50.2			50.2

ND x.xxEx = Below detection limit of x.xxEx; BP = Below practical quantitation limit; IM = Below detection limit in impinger sample; NA = Not analyzed by this method; H = CAA HAP; N = Not a HAP or VOC as defined by US EPA; TM = Start and end times for THC and speciated compounds differ; QA = Failed quality assurance; MSF = 1000 square feet; ODTH = Oven Dried Tons per Hour; AI = Analytical Interference; MLF = 1000 Linear Feet; MCF = 1000 Cubic Feet

12/9/99
9:08 AM

Table B6. Summary of Emission Test Results
Softwood Veneer Dryer, Veneer Dryer No. 2, Building Vent (112-1MF1)

Analyte		112-1MF1N1			112-1MF1N2			112-1MF1N3			Average Emission		
			ppmVd	lb/MSF		ppmVd	lb/MSF		ppmVd	lb/MSF		ppmVd	lb/MSF
acetaldehyde	(H)	ND	5.0E-01	4.9E-03	ND	5.1E-01	2.6E-02	ND	4.9E-01	4.1E-03	ND	5.0E-01	1.2E-02
acetone	(N)	IM	4.4E-01	5.7E-03	IM	4.7E-01	3.2E-02	IM	4.5E-01	4.9E-03		4.5E-01	1.4E-02
acrolein	(H)	ND	3.5E-01	4.3E-03	ND	3.6E-01	2.3E-02	ND	3.4E-01	3.6E-03	ND	3.5E-01	1.0E-02
benzene	(H)	ND	9.1E-02	1.6E-03	ND	1.0E-01	9.3E-03	ND	9.2E-02	1.4E-03	ND	9.5E-02	4.1E-03
bromomethane	(H)	ND	9.1E-02	1.9E-03	ND	1.0E-01	1.1E-02	ND	9.2E-02	1.6E-03	ND	9.5E-02	5.0E-03
camphene		ND	1.8E+00	5.5E-02	ND	2.0E+00	3.2E-01	ND	1.8E+00	4.7E-02	ND	1.9E+00	1.4E-01
3-carene		ND	1.8E+00	5.5E-02	ND	2.0E+00	3.2E-01	ND	1.8E+00	4.7E-02	ND	1.9E+00	1.4E-01
chloroethane	(H)	ND	9.1E-02	1.3E-03	ND	1.0E-01	7.7E-03	ND	9.2E-02	1.1E-03	ND	9.5E-02	3.4E-03
chloroethene	(H)	ND	9.1E-02	1.3E-03	ND	1.0E-01	7.4E-03	ND	9.2E-02	1.1E-03	ND	9.5E-02	3.3E-03
cumene	(H)	ND	1.8E+00	4.9E-02	ND	2.0E+00	2.9E-01	ND	1.8E+00	4.2E-02	ND	1.9E+00	1.3E-01
p-cymene		ND	1.8E+00	5.5E-02	ND	2.0E+00	3.2E-01	ND	1.8E+00	4.7E-02	ND	1.9E+00	1.4E-01
1,2-dichloroethane	(H)	ND	9.1E-02	2.0E-03	ND	1.0E-01	1.2E-02	ND	9.2E-02	1.7E-03	ND	9.5E-02	5.2E-03
cis-1,2-dichloroethylene		ND	9.1E-02	2.0E-03	ND	1.0E-01	1.2E-02	ND	9.2E-02	1.7E-03	ND	9.5E-02	5.1E-03
formaldehyde	(H)	ND	2.0E-01	1.3E-03	ND	2.0E-01	7.0E-03	ND	1.9E-01	1.1E-03	ND	2.0E-01	3.1E-03
limonene		ND	1.8E+00	5.5E-02	ND	2.0E+00	3.2E-01	ND	1.8E+00	4.7E-02	ND	1.9E+00	1.4E-01
p-mentha-1,5-diene		ND	1.8E+00	5.5E-02	ND	2.0E+00	3.2E-01	ND	1.8E+00	4.7E-02	ND	1.9E+00	1.4E-01
methanol	(H)	BP	1.2E+00	8.8E-03	BP	1.5E+00	5.5E-02	BP	1.5E+00	8.9E-03		1.4E+00	2.4E-02
methyl ethyl ketone (MEK)	(H)	ND	3.4E-01	5.5E-03	ND	3.5E-01	3.0E-02	ND	3.4E-01	4.6E-03	ND	3.4E-01	1.3E-02
methyl isobutyl ketone	(H)	ND	2.3E-01	5.2E-03	ND	2.4E-01	2.9E-02	ND	2.3E-01	4.4E-03	ND	2.4E-01	1.3E-02
methylene chloride	(H)	ND	9.1E-02	1.7E-03	ND	1.0E-01	1.0E-02	ND	9.2E-02	1.5E-03	ND	9.5E-02	4.4E-03
phenol	(H)	ND	4.2E-01	8.8E-03	ND	4.3E-01	4.8E-02	ND	4.2E-01	7.4E-03	ND	4.2E-01	2.1E-02
alpha-pinene		ND	1.8E+00	5.5E-02	ND	2.0E+00	3.2E-01	ND	1.8E+00	4.7E-02	ND	1.9E+00	1.4E-01
beta-pinene		ND	1.8E+00	5.5E-02	ND	2.0E+00	3.2E-01	ND	1.8E+00	4.7E-02	ND	1.9E+00	1.4E-01
propionaldehyde	(H)	ND	3.8E-01	4.9E-03	ND	3.9E-01	2.6E-02	ND	3.7E-01	4.1E-03	ND	3.8E-01	1.2E-02
styrene	(H)	ND	9.1E-02	2.1E-03	ND	1.0E-01	1.2E-02	ND	9.2E-02	1.8E-03	ND	9.5E-02	5.4E-03
toluene	(H)	ND	9.1E-02	1.9E-03	ND	1.0E-01	1.1E-02	ND	9.2E-02	1.6E-03	ND	9.5E-02	4.8E-03
1,2,4-trichlorobenzene	(H)	ND	9.1E-02	3.7E-03	ND	1.0E-01	2.2E-02	ND	9.2E-02	3.2E-03	ND	9.5E-02	9.5E-03
m,p-xylene	(H)	ND	9.1E-02	2.2E-03	ND	1.0E-01	1.3E-02	ND	9.2E-02	1.8E-03	ND	9.5E-02	5.5E-03
o-xylene	(H)	ND	9.1E-02	2.2E-03	ND	1.0E-01	1.3E-02	ND	9.2E-02	1.8E-03	ND	9.5E-02	5.5E-03
THC as Carbon		NA			NA			NA					
Total HAPs				8.8E-03			5.5E-02			8.9E-03			2.4E-02
Total Terpenes				0.0E+00			0.0E+00			0.0E+00			0.0E+00
Production Rate (MSF 3/8 /hr)				8.0			1.5			8.8			6.1
Vol. Flow Rate (DSCFM)				1.1E+04			1.1E+04			1.1E+04			1.1E+04
Source Moisture (%)				2.3			2.0			2.3			2.2
Source Temp (°C)				43.3			43.8			43.2			43.4

ND x.xxEx = Below detection limit of x.xxEx; BP = Below practical quantitation limit; IM = Below detection limit in impinger sample; NA = Not analyzed by this method; H = CAA HAP; N = Not a HAP or VOC as defined by US EPA; TM = Start and end times for THC and speciated compounds differ; QA = Failed quality assurance; MSF = 1000 square feet; ODTH = Oven Dried Tons per Hour; AI = Analytical Interference; MLF = 1000 Linear Feet; MCF = 1000 Cubic Feet

Table B7. Summary of Emission Test Results
Softwood Veneer Dryer, Dryer No. 2, Dry End Vent Pine/Fir Furnish (112-2DV5)

Analyte		112-2DV5N4			112-2DV5N5			112-2DV5N6			Average Emission		
			ppmVd	lb/MSF		ppmVd	lb/MSF		ppmVd	lb/MSF		ppmVd	lb/MSF
acetaldehyde	(H)	BP	1.1E+00	1.0E-02	BP	5.1E-01	4.6E-03		1.3E+00	1.1E-02		9.9E-01	8.5E-03
acetone	(N)	BP	7.2E-01	8.6E-03	BP	6.5E-01	7.7E-03		9.9E-01	1.0E-02		7.9E-01	8.9E-03
acrolein	(H)	ND	3.1E-01	3.5E-03	ND	3.4E-01	3.9E-03	ND	2.9E-01	3.0E-03	ND	3.1E-01	3.5E-03
benzene	(H)	ND	9.3E-02	1.5E-03	ND	1.2E-01	2.0E-03	ND	8.9E-02	1.3E-03	ND	1.0E-01	1.6E-03
bromomethane	(H)	ND	9.3E-02	1.8E-03	ND	1.2E-01	2.4E-03	ND	8.9E-02	1.5E-03	ND	1.0E-01	1.9E-03
camphene		ND	1.9E+00	5.2E-02	ND	2.5E+00	6.9E-02	ND	1.8E+00	4.4E-02	ND	2.0E+00	5.5E-02
3-carene			6.5E+00	1.8E-01		7.0E+00	1.9E-01		8.1E+00	2.0E-01		7.2E+00	1.9E-01
chloroethane	(H)	ND	9.3E-02	1.2E-03	ND	1.2E-01	1.6E-03	ND	8.9E-02	1.0E-03	ND	1.0E-01	1.3E-03
chloroethene	(H)	ND	9.3E-02	1.2E-03	ND	1.2E-01	1.6E-03	ND	8.9E-02	1.0E-03	ND	1.0E-01	1.3E-03
cumene	(H)	ND	1.9E+00	4.6E-02	ND	2.5E+00	6.1E-02	ND	1.8E+00	3.9E-02	ND	2.0E+00	4.9E-02
p-cymene		ND	1.9E+00	5.2E-02	ND	2.5E+00	6.8E-02	ND	1.8E+00	4.3E-02	ND	2.0E+00	5.4E-02
1,2-dichloroethane	(H)	ND	9.3E-02	1.9E-03	ND	1.2E-01	2.5E-03	ND	8.9E-02	1.6E-03	ND	1.0E-01	2.0E-03
cis-1,2-dichloroethylene		ND	9.3E-02	1.9E-03	ND	1.2E-01	2.5E-03	ND	8.9E-02	1.6E-03	ND	1.0E-01	2.0E-03
formaldehyde	(H)		7.8E-01	4.8E-03	BP	5.2E-01	3.2E-03		1.2E+00	6.6E-03		8.3E-01	4.8E-03
limonene		ND	1.9E+00	5.2E-02	ND	2.5E+00	6.9E-02	ND	1.8E+00	4.4E-02	ND	2.0E+00	5.5E-02
p-mentha-1,5-diene		ND	1.9E+00	5.2E-02	ND	2.5E+00	6.9E-02	ND	1.8E+00	4.4E-02	ND	2.0E+00	5.5E-02
methanol	(H)		2.8E+00	1.8E-02		1.7E+00	1.1E-02		3.0E+00	1.8E-02		2.5E+00	1.6E-02
methyl ethyl ketone (MEK)	(H)	ND	3.0E-01	4.4E-03	ND	3.3E-01	4.9E-03	ND	2.9E-01	3.8E-03	ND	3.1E-01	4.4E-03
methyl isobutyl ketone	(H)	ND	2.1E-01	4.4E-03	ND	2.5E-01	5.0E-03	ND	2.0E-01	3.7E-03	ND	2.2E-01	4.4E-03
methylene chloride	(H)	ND	9.3E-02	1.6E-03	ND	1.2E-01	2.2E-03	ND	8.9E-02	1.4E-03	ND	1.0E-01	1.7E-03
phenol	(H)	ND	3.7E-01	7.1E-03	ND	4.0E-01	7.7E-03	ND	3.5E-01	6.0E-03	ND	3.7E-01	6.9E-03
alpha-pinene		ND	1.9E+00	5.2E-02	ND	2.5E+00	6.9E-02	ND	1.8E+00	4.4E-02	ND	2.0E+00	5.5E-02
beta-pinene		ND	1.9E+00	5.2E-02	ND	2.5E+00	6.9E-02		2.0E+00	4.9E-02		6.6E-01	1.6E-02
propionaldehyde	(H)	BP	5.5E-01	6.6E-03	ND	3.7E-01	4.3E-03	BP	5.4E-01	5.7E-03		3.6E-01	4.1E-03
styrene	(H)	ND	9.3E-02	2.0E-03	ND	1.2E-01	2.6E-03	ND	8.9E-02	1.7E-03	ND	1.0E-01	2.1E-03
toluene	(H)	ND	9.3E-02	1.8E-03	ND	1.2E-01	2.3E-03	ND	8.9E-02	1.5E-03	ND	1.0E-01	1.9E-03
1,2,4-trichlorobenzene	(H)	ND	9.3E-02	3.5E-03	ND	1.2E-01	4.6E-03	ND	8.9E-02	2.9E-03	ND	1.0E-01	3.7E-03
m,p-xylene	(H)	ND	9.3E-02	2.0E-03	ND	1.2E-01	2.7E-03	ND	8.9E-02	1.7E-03	ND	1.0E-01	2.1E-03
o-xylene	(H)	ND	9.3E-02	2.0E-03	ND	1.2E-01	2.7E-03	ND	8.9E-02	1.7E-03	ND	1.0E-01	2.1E-03
THC as Carbon		NA			TM	2.4E+02	5.7E-01	TM	3.3E+02	7.2E-01		2.8E+02	6.5E-01
Total HAPs				4.0E-02			1.9E-02			4.0E-02			3.3E-02
Total Terpenes				1.8E-01			1.9E-01			2.5E-01			2.1E-01
Production Rate (MSF 3/8 /hr)				7.9			7.9			8.5			8.1
Vol. Flow Rate (DSCFM)				1.0E+04			1.0E+04			9.9E+03			1.0E+04
Source Moisture (%)				7.5			9.6			12.8			10.0
Source Temp (°C)				140.4			138.3			137.6			138.8

ND x.xxEx = Below detection limit of x.xxEx; BP = Below practical quantitation limit; IM = Below detection limit in impinger sample; NA = Not analyzed by this method; H = CAA HAP; N = Not a HAP or VOC as defined by US EPA; TM = Start and end times for THC and speciated compounds differ; QA = Failed quality assurance; MSF = 1000 square feet; ODTH = Oven Dried Tons per Hour; AI = Analytical Interference; MLF = 1000 Linear Feet; MCF = 1000 Cubic Feet

12/9/99
9:09 AM

Table B8. Summary of Emission Test Results
Softwood Veneer Dryer, Dryer No. 2, Green End Vent, Pine/Fir Furnish (112-2DV6)

Analyte		112-2DV6N4			112-2DV6N5			112-2DV6N6			Average Emission		
			ppmVd	lb/MSF		ppmVd	lb/MSF		ppmVd	lb/MSF		ppmVd	lb/MSF
acetaldehyde	(H)	BP	1.0E+00	4.5E-03	ND	5.7E-01	2.3E-03	ND	5.4E-01	1.7E-03		3.4E-01	1.5E-03
acetone	(N)		1.0E+00	5.9E-03	BP	7.9E-01	4.2E-03		1.4E+00	5.8E-03		1.1E+00	5.3E-03
acrolein	(H)	ND	3.5E-01	2.0E-03	ND	4.1E-01	2.1E-03	ND	3.7E-01	1.5E-03	ND	3.8E-01	1.9E-03
benzene	(H)	ND	9.0E-02	7.0E-04	ND	1.3E-01	9.5E-04	ND	9.0E-02	5.1E-04	ND	1.0E-01	7.2E-04
bromomethane	(H)	ND	9.0E-02	8.5E-04	ND	1.3E-01	1.2E-03	ND	9.0E-02	6.1E-04	ND	1.0E-01	8.7E-04
camphene		ND	1.8E+00	2.5E-02	ND	2.6E+00	3.3E-02	ND	1.8E+00	1.8E-02	ND	2.1E+00	2.5E-02
3-carene			2.1E+01	2.9E-01		1.6E+01	2.1E-01		1.7E+01	1.7E-01		1.8E+01	2.2E-01
chloroethane	(H)	ND	9.0E-02	5.8E-04	ND	1.3E-01	7.8E-04	ND	9.0E-02	4.2E-04	ND	1.0E-01	5.9E-04
chloroethene	(H)	ND	9.0E-02	5.6E-04	ND	1.3E-01	7.6E-04	ND	9.0E-02	4.0E-04	ND	1.0E-01	5.7E-04
cumene	(H)	ND	1.8E+00	2.2E-02	ND	2.6E+00	2.9E-02	ND	1.8E+00	1.6E-02	ND	2.1E+00	2.2E-02
p-cymene		ND	1.8E+00	2.4E-02	ND	2.6E+00	3.3E-02	ND	1.8E+00	1.7E-02	ND	2.1E+00	2.5E-02
1,2-dichloroethane	(H)	ND	9.0E-02	8.9E-04	ND	1.3E-01	1.2E-03	ND	9.0E-02	6.4E-04	ND	1.0E-01	9.1E-04
cis-1,2-dichloroethylene		ND	9.0E-02	8.7E-04	ND	1.3E-01	1.2E-03	ND	9.0E-02	6.3E-04	ND	1.0E-01	8.9E-04
formaldehyde	(H)	BP	6.7E-01	2.0E-03	BP	3.7E-01	1.0E-03	BP	4.6E-01	9.9E-04		5.0E-01	1.3E-03
limonene			2.5E+00	3.3E-02	ND	2.6E+00	3.3E-02		2.4E+00	2.3E-02		1.6E+00	1.9E-02
p-mentha-1,5-diene		ND	1.8E+00	2.5E-02	ND	2.6E+00	3.3E-02	ND	1.8E+00	1.8E-02	ND	2.1E+00	2.5E-02
methanol	(H)		9.0E+00	2.9E-02		6.2E+00	1.8E-02		1.0E+01	2.4E-02		8.5E+00	2.4E-02
methyl ethyl ketone (MEK)	(H)	ND	3.4E-01	2.5E-03	ND	4.0E-01	2.7E-03	ND	3.6E-01	1.9E-03	ND	3.7E-01	2.3E-03
methyl isobutyl ketone	(H)	ND	2.3E-01	2.3E-03	ND	2.9E-01	2.7E-03	ND	2.5E-01	1.8E-03	ND	2.6E-01	2.3E-03
methylene chloride	(H)	ND	9.0E-02	7.6E-04	ND	1.3E-01	1.0E-03	ND	9.0E-02	5.5E-04	ND	1.0E-01	7.8E-04
phenol	(H)	ND	4.2E-01	4.0E-03	ND	4.9E-01	4.3E-03	ND	4.5E-01	3.0E-03	ND	4.5E-01	3.8E-03
alpha-pinene			3.1E+00	4.3E-02		3.4E+00	4.3E-02		3.1E+00	3.0E-02		3.2E+00	3.9E-02
beta-pinene			4.9E+00	6.6E-02		4.3E+00	5.4E-02		4.4E+00	4.3E-02		4.5E+00	5.5E-02
propionaldehyde	(H)	ND	3.8E-01	2.2E-03	ND	4.4E-01	2.4E-03	ND	4.1E-01	1.7E-03	ND	4.1E-01	2.1E-03
styrene	(H)	ND	9.0E-02	9.4E-04	ND	1.3E-01	1.3E-03	ND	9.0E-02	6.7E-04	ND	1.0E-01	9.6E-04
toluene	(H)	ND	9.0E-02	8.3E-04	ND	1.3E-01	1.1E-03	ND	9.0E-02	6.0E-04	ND	1.0E-01	8.5E-04
1,2,4-trichlorobenzene	(H)	ND	9.0E-02	1.6E-03	ND	1.3E-01	2.2E-03	ND	9.0E-02	1.2E-03	ND	1.0E-01	1.7E-03
m,p-xylene	(H)	ND	9.0E-02	9.6E-04	ND	1.3E-01	1.3E-03	ND	9.0E-02	6.9E-04	ND	1.0E-01	9.8E-04
o-xylene	(H)	ND	9.0E-02	9.6E-04	ND	1.3E-01	1.3E-03	ND	9.0E-02	6.9E-04	ND	1.0E-01	9.8E-04
THC as Carbon			6.5E+02	7.8E-01	NA			NA				6.5E+02	7.8E-01
Total HAPs				3.6E-02			2.0E-02			2.5E-02			2.7E-02
Total Terpenes				4.3E-01			3.1E-01			2.7E-01			3.3E-01
Production Rate (MSF 3/8 /hr)				7.9			7.9			8.5			8.1
Vol. Flow Rate (DSCFM)				5.1E+03			4.7E+03			3.9E+03			4.6E+03
Source Moisture (%)				22.3			21.8			21.3			21.8
Source Temp (°C)				140.6			131.9			128.6			133.7

ND x.xxEx = Below detection limit of x.xxEx; BP = Below practical quantitation limit; IM = Below detection limit in impinger sample; NA = Not analyzed by this method; H = CAA HAP; N = Not a HAP or VOC as defined by US EPA; TM = Start and end times for THC and speciated compounds differ; QA = Failed quality assurance; MSF = 1000 square feet; ODTH = Oven Dried Tons per Hour; AI = Analytical Interference; MLF = 1000 Linear Feet; MCF = 1000 Cubic Feet

Table B9. Summary of Emission Test Results
Radio Frequency Dryer, RF Dryer Vent (112-1DM1)

Analyte		112-1DM1N1			112-1DM1N2			112-1DM1N3			Average Emission		
			ppmVd	lb/MSF		ppmVd	lb/MSF		ppmVd	lb/MSF		ppmVd	lb/MSF
acetaldehyde	(H)	ND	5.2E-01	2.3E-04	ND	4.6E-01	2.3E-04	ND	5.1E-01	3.7E-04	ND	5.0E-01	2.7E-04
acetone	(N)	BP	8.1E-01	4.6E-04	IM	4.2E-01	2.7E-04	BP	4.9E-01	4.7E-04		5.7E-01	4.0E-04
acrolein	(H)	ND	3.6E-01	2.0E-04	ND	3.2E-01	2.0E-04	ND	3.5E-01	3.3E-04	ND	3.4E-01	2.4E-04
benzene	(H)	ND	8.6E-02	6.6E-05	ND	8.6E-02	7.4E-05	ND	9.0E-02	1.2E-04	ND	8.7E-02	8.6E-05
bromomethane	(H)	ND	8.6E-02	8.1E-05	ND	8.6E-02	9.0E-05	ND	9.0E-02	1.4E-04	ND	8.7E-02	1.0E-04
camphene		ND	1.7E+00	2.3E-03	ND	1.7E+00	2.6E-03	ND	1.8E+00	4.1E-03	ND	1.7E+00	3.0E-03
3-carene		ND	1.7E+00	2.3E-03	ND	1.7E+00	2.6E-03	ND	1.8E+00	4.1E-03	ND	1.7E+00	3.0E-03
chloroethane	(H)	ND	8.6E-02	5.5E-05	ND	8.6E-02	6.1E-05	ND	9.0E-02	9.6E-05	ND	8.7E-02	7.1E-05
chloroethene	(H)	ND	8.6E-02	5.3E-05	ND	8.6E-02	5.9E-05	ND	9.0E-02	9.3E-05	ND	8.7E-02	6.9E-05
cumene	(H)	ND	1.7E+00	2.0E-03	ND	1.7E+00	2.3E-03	ND	1.8E+00	3.6E-03	ND	1.7E+00	2.6E-03
p-cymene		ND	1.7E+00	2.3E-03	ND	1.7E+00	2.5E-03	ND	1.8E+00	4.0E-03	ND	1.7E+00	2.9E-03
1,2-dichloroethane	(H)	ND	8.6E-02	8.4E-05	ND	8.6E-02	9.4E-05	ND	9.0E-02	1.5E-04	ND	8.7E-02	1.1E-04
cis-1,2-dichloroethylene		ND	8.6E-02	8.2E-05	ND	8.6E-02	9.2E-05	ND	9.0E-02	1.4E-04	ND	8.7E-02	1.1E-04
formaldehyde	(H)	ND	2.1E-01	6.3E-05	ND	1.8E-01	6.1E-05	ND	2.0E-01	1.0E-04	ND	2.0E-01	7.5E-05
limonene		ND	1.7E+00	2.3E-03	ND	1.7E+00	2.6E-03	ND	1.8E+00	4.1E-03	ND	1.7E+00	3.0E-03
p-mentha-1,5-diene		ND	1.7E+00	2.3E-03	ND	1.7E+00	2.6E-03	ND	1.8E+00	4.1E-03	ND	1.7E+00	3.0E-03
methanol	(H)		2.7E+00	8.6E-04	ND	6.0E-01	2.1E-04	BP	1.3E+00	7.1E-04		1.4E+00	5.2E-04
methyl ethyl ketone (MEK)	(H)	ND	3.5E-01	2.5E-04	ND	3.2E-01	2.5E-04	ND	3.5E-01	4.1E-04	ND	3.4E-01	3.0E-04
methyl isobutyl ketone	(H)	ND	2.4E-01	2.4E-04	ND	2.2E-01	2.4E-04	ND	2.4E-01	3.9E-04	ND	2.3E-01	2.9E-04
methylene chloride	(H)	ND	8.6E-02	7.2E-05	ND	8.6E-02	8.1E-05	ND	9.0E-02	1.3E-04	ND	8.7E-02	9.3E-05
phenol	(H)	ND	4.4E-01	4.1E-04	ND	3.9E-01	4.1E-04	ND	4.3E-01	6.7E-04	ND	4.2E-01	4.9E-04
alpha-pinene			7.6E+00	1.0E-02		2.0E+00	3.0E-03		9.4E+00	2.1E-02		6.3E+00	1.1E-02
beta-pinene		ND	1.7E+00	2.3E-03	ND	1.7E+00	2.6E-03	ND	1.8E+00	4.1E-03	ND	1.7E+00	3.0E-03
propionaldehyde	(H)	ND	3.9E-01	2.3E-04	ND	3.5E-01	2.3E-04	ND	3.9E-01	3.7E-04	ND	3.8E-01	2.7E-04
styrene	(H)	ND	8.6E-02	8.8E-05	ND	8.6E-02	9.9E-05	ND	9.0E-02	1.6E-04	ND	8.7E-02	1.1E-04
toluene	(H)	ND	8.6E-02	7.8E-05	ND	8.6E-02	8.7E-05	ND	9.0E-02	1.4E-04	ND	8.7E-02	1.0E-04
1,2,4-trichlorobenzene	(H)	ND	8.6E-02	1.5E-04	ND	8.6E-02	1.7E-04	ND	9.0E-02	2.7E-04	ND	8.7E-02	2.0E-04
m,p-xylene	(H)	ND	8.6E-02	9.0E-05	ND	8.6E-02	1.0E-04	ND	9.0E-02	1.6E-04	ND	8.7E-02	1.2E-04
o-xylene	(H)	ND	8.6E-02	9.0E-05	ND	8.6E-02	1.0E-04	ND	9.0E-02	1.6E-04	ND	8.7E-02	1.2E-04
THC as Carbon			1.6E+02	1.8E-02		5.1E+01	6.8E-03		1.9E+02	3.8E-02		1.3E+02	2.1E-02
Total HAPs				8.6E-04			0.0E+00			7.1E-04			5.2E-04
Total Terpenes				1.0E-02			3.0E-03			2.1E-02			1.1E-02
Production Rate (MSF 3/8 /hr)				13.3			13.3			11.1			12.6
Vol. Flow Rate (DSCFM)				8.4E+02			9.5E+02			1.2E+03			9.9E+02
Source Moisture (%)				3.2			3.5			1.7			2.8
Source Temp (°C)				88.7			90.7			95.4			91.6

ND x.xxEx = Below detection limit of x.xxEx; BP = Below practical quantitation limit; IM = Below detection limit in impinger sample; NA = Not analyzed by this method; H = CAA HAP; N = Not a HAP or VOC as defined by US EPA; TM = Start and end times for THC and speciated compounds differ; QA = Failed quality assurance; MSF = 1000 square feet; ODTH = Oven Dried Tons per Hour; AI = Analytical Interference; MLF = 1000 Linear Feet; MCF = 1000 Cubic Feet

12/9/99
9:09 AM

Table B10. Summary of Emission Test Results
Softwood Plywood Hot Press, Powered Vent Above Press (112-1PB1)

Analyte		112-1PB1N1			112-1PB1N2			112-1PB1N3			Average Emission		
			ppmVd	lb/MSF		ppmVd	lb/MSF		ppmVd	lb/MSF		ppmVd	lb/MSF
acetaldehyde	(H)	ND	3.6E-01	1.6E-03	BP	4.4E-01	2.1E-03	ND	3.8E-01	2.0E-03		1.5E-01	7.2E-04
acetone	(N)	BP	5.0E-01	3.0E-03	BP	5.5E-01	3.6E-03	BP	4.5E-01	3.1E-03		5.0E-01	3.2E-03
acrolein	(H)	ND	2.6E-01	1.5E-03	ND	2.7E-01	1.7E-03	ND	2.7E-01	1.8E-03	ND	2.6E-01	1.6E-03
benzene	(H)	ND	8.3E-02	6.7E-04	ND	8.3E-02	7.2E-04	ND	8.2E-02	7.6E-04	ND	8.3E-02	7.2E-04
bromomethane	(H)	ND	8.3E-02	8.1E-04	ND	8.3E-02	8.7E-04	ND	8.2E-02	9.3E-04	ND	8.3E-02	8.7E-04
camphene		ND	1.7E+00	2.3E-02	ND	1.7E+00	2.5E-02	ND	1.6E+00	2.7E-02	ND	1.7E+00	2.5E-02
3-carene		ND	1.7E+00	2.3E-02	ND	1.7E+00	2.5E-02	ND	1.6E+00	2.7E-02	ND	1.7E+00	2.5E-02
chloroethane	(H)	ND	8.3E-02	5.5E-04	ND	8.3E-02	5.9E-04	ND	8.2E-02	6.3E-04	ND	8.3E-02	5.9E-04
chloroethene	(H)	ND	8.3E-02	5.3E-04	ND	8.3E-02	5.8E-04	ND	8.2E-02	6.1E-04	ND	8.3E-02	5.7E-04
cumene	(H)	ND	1.7E+00	2.0E-02	ND	1.7E+00	2.2E-02	ND	1.6E+00	2.3E-02	ND	1.7E+00	2.2E-02
p-cymene		ND	1.7E+00	2.3E-02	ND	1.7E+00	2.5E-02	ND	1.6E+00	2.6E-02	ND	1.7E+00	2.5E-02
1,2-dichloroethane	(H)	ND	8.3E-02	8.4E-04	ND	8.3E-02	9.1E-04	ND	8.2E-02	9.7E-04	ND	8.3E-02	9.1E-04
cis-1,2-dichloroethylene		ND	8.3E-02	8.3E-04	ND	8.3E-02	8.9E-04	ND	8.2E-02	9.5E-04	ND	8.3E-02	8.9E-04
formaldehyde	(H)	BP	3.7E-01	1.1E-03		9.4E-01	3.1E-03		6.8E-01	2.4E-03		6.6E-01	2.2E-03
limonene		ND	1.7E+00	2.3E-02	ND	1.7E+00	2.5E-02	ND	1.6E+00	2.7E-02	ND	1.7E+00	2.5E-02
p-mentha-1,5-diene		ND	1.7E+00	2.3E-02	ND	1.7E+00	2.5E-02	ND	1.6E+00	2.7E-02	ND	1.7E+00	2.5E-02
methanol	(H)		8.1E+00	2.7E-02		8.6E+00	3.1E-02		1.1E+01	4.1E-02		9.2E+00	3.3E-02
methyl ethyl ketone (MEK)	(H)	IM	2.7E-01	2.0E-03	ND	2.6E-01	2.1E-03	ND	2.6E-01	2.2E-03		9.0E-02	6.6E-04
methyl isobutyl ketone	(H)	ND	1.8E-01	1.8E-03	ND	1.9E-01	2.1E-03	ND	1.9E-01	2.2E-03	ND	1.8E-01	2.0E-03
methylene chloride	(H)	ND	8.3E-02	7.2E-04	ND	8.3E-02	7.8E-04	ND	8.2E-02	8.3E-04	ND	8.3E-02	7.8E-04
phenol	(H)	ND	3.1E-01	3.0E-03	ND	3.2E-01	3.4E-03	ND	3.2E-01	3.6E-03	ND	3.2E-01	3.3E-03
alpha-pinene		ND	1.7E+00	2.3E-02	ND	1.7E+00	2.5E-02	ND	1.6E+00	2.7E-02	ND	1.7E+00	2.5E-02
beta-pinene		ND	1.7E+00	2.3E-02	ND	1.7E+00	2.5E-02	ND	1.6E+00	2.7E-02	ND	1.7E+00	2.5E-02
propionaldehyde	(H)	ND	2.8E-01	1.7E-03	ND	2.9E-01	1.9E-03	ND	2.9E-01	2.0E-03	ND	2.9E-01	1.8E-03
styrene	(H)	ND	8.3E-02	8.9E-04	ND	8.3E-02	9.6E-04	ND	8.2E-02	1.0E-03	ND	8.3E-02	9.5E-04
toluene	(H)	ND	8.3E-02	7.9E-04	ND	8.3E-02	8.5E-04	ND	8.2E-02	9.0E-04	ND	8.3E-02	8.4E-04
1,2,4-trichlorobenzene	(H)	ND	8.3E-02	1.5E-03	ND	8.3E-02	1.7E-03	ND	8.2E-02	1.8E-03	ND	8.3E-02	1.7E-03
m,p-xylene	(H)	ND	8.3E-02	9.1E-04	ND	8.3E-02	9.8E-04	ND	8.2E-02	1.0E-03	ND	8.3E-02	9.7E-04
o-xylene	(H)	ND	8.3E-02	9.1E-04	ND	8.3E-02	9.8E-04	ND	8.2E-02	1.0E-03	ND	8.3E-02	9.7E-04
THC as Carbon			7.0E+01	8.6E-02		5.2E+01	7.0E-02		5.6E+01	8.0E-02		6.0E+01	7.9E-02
Total HAPs				3.0E-02			3.6E-02			4.4E-02			3.6E-02
Total Terpenes				0.0E+00			0.0E+00			0.0E+00			0.0E+00
Production Rate (MSF 3/8 /hr)				26.4			26.4			26.4			26.4
Vol. Flow Rate (DSCFM)				1.7E+04			1.9E+04			2.0E+04			1.9E+04
Source Moisture (%)				2.8			2.8			2.7			2.8
Source Temp (°C)				43.8			45.1			46.8			45.2

ND x.xxEx = Below detection limit of x.xxEx; BP = Below practical quantitation limit; IM = Below detection limit in impinger sample; NA = Not analyzed by this method; H = CAA HAP; N = Not a HAP or VOC as defined by US EPA; TM = Start and end times for THC and speciated compounds differ; QA = Failed quality assurance; MSF = 1000 square feet; ODTH = Oven Dried Tons per Hour; AI = Analytical Interference; MLF = 1000 Linear Feet; MCF = 1000 Cubic Feet

Table B11. Summary of Emission Test Results
Log Steaming Vat, Vat Vent (112-1ML1)

Analyte		112-1ML1N1			112-1ML1N2			112-1ML1N3			Average Emission		
			ppmVd	lb/MSF		ppmVd	lb/MSF		ppmVd	lb/MSF		ppmVd	lb/MSF
acetaldehyde	(H)		2.3E+00	4.1E-03		2.1E+00	3.7E-03		3.9E+00	6.2E-03		2.8E+00	4.7E-03
acetone	(N)		1.4E+00	3.3E-03		1.1E+00	2.6E-03		1.5E+00	3.1E-03		1.3E+00	3.0E-03
acrolein	(H)	ND	3.5E-01	8.1E-04	ND	3.5E-01	8.0E-04	ND	3.4E-01	6.7E-04	ND	3.5E-01	7.6E-04
benzene	(H)	ND	9.3E-02	3.0E-04	ND	9.1E-02	2.9E-04	ND	9.2E-02	2.6E-04	ND	9.2E-02	2.8E-04
bromomethane	(H)	ND	9.3E-02	3.7E-04	ND	9.1E-02	3.5E-04	ND	9.2E-02	3.1E-04	ND	9.2E-02	3.4E-04
camphene		ND	1.9E+00	1.0E-02	ND	1.8E+00	1.0E-02	ND	1.8E+00	9.0E-03	ND	1.8E+00	9.8E-03
3-carene		ND	1.9E+00	1.0E-02	ND	1.8E+00	1.0E-02	ND	1.8E+00	9.0E-03	ND	1.8E+00	9.8E-03
chloroethane	(H)	ND	9.3E-02	2.5E-04	ND	9.1E-02	2.4E-04	ND	9.2E-02	2.1E-04	ND	9.2E-02	2.3E-04
chloroethene	(H)	ND	9.3E-02	2.4E-04	ND	9.1E-02	2.3E-04	ND	9.2E-02	2.1E-04	ND	9.2E-02	2.3E-04
cumene	(H)	ND	1.9E+00	9.3E-03	ND	1.8E+00	8.9E-03	ND	1.8E+00	7.9E-03	ND	1.8E+00	8.7E-03
p-cymene		ND	1.9E+00	1.0E-02	ND	1.8E+00	9.9E-03	ND	1.8E+00	8.8E-03	ND	1.8E+00	9.7E-03
1,2-dichloroethane	(H)	ND	9.3E-02	3.8E-04	ND	9.1E-02	3.7E-04	ND	9.2E-02	3.3E-04	ND	9.2E-02	3.6E-04
cis-1,2-dichloroethylene		ND	9.3E-02	3.7E-04	ND	9.1E-02	3.6E-04	ND	9.2E-02	3.2E-04	ND	9.2E-02	3.5E-04
formaldehyde	(H)	ND	2.0E-01	2.5E-04	ND	2.0E-01	2.5E-04	ND	1.9E-01	2.0E-04	ND	2.0E-01	2.3E-04
limonene		ND	1.9E+00	1.0E-02	ND	1.8E+00	1.0E-02	ND	1.8E+00	9.0E-03	ND	1.8E+00	9.8E-03
p-mentha-1,5-diene		ND	1.9E+00	1.0E-02	ND	1.8E+00	1.0E-02	ND	1.8E+00	9.0E-03	ND	1.8E+00	9.8E-03
methanol	(H)		5.9E+00	7.7E-03		4.6E+00	6.0E-03		7.3E+00	8.3E-03		5.9E+00	7.3E-03
methyl ethyl ketone (MEK)	(H)	ND	3.4E-01	1.0E-03	ND	3.4E-01	1.0E-03	ND	3.3E-01	8.4E-04	ND	3.4E-01	9.6E-04
methyl isobutyl ketone	(H)	ND	2.4E-01	9.8E-04	ND	2.4E-01	9.6E-04	ND	2.3E-01	8.2E-04	ND	2.3E-01	9.2E-04
methylene chloride	(H)	ND	9.3E-02	3.3E-04	ND	9.1E-02	3.1E-04	ND	9.2E-02	2.8E-04	ND	9.2E-02	3.1E-04
phenol	(H)	ND	4.3E-01	1.6E-03	ND	4.3E-01	1.6E-03	ND	4.1E-01	1.4E-03	ND	4.2E-01	1.5E-03
alpha-pinene			7.8E+00	4.4E-02		1.0E+01	5.7E-02		1.4E+01	6.7E-02		1.1E+01	5.6E-02
beta-pinene		ND	1.9E+00	1.0E-02	ND	1.8E+00	1.0E-02		1.9E+00	9.0E-03		6.2E-01	3.0E-03
propionaldehyde	(H)	ND	3.8E-01	9.2E-04	ND	3.8E-01	9.1E-04	ND	3.7E-01	7.6E-04	ND	3.8E-01	8.6E-04
styrene	(H)	ND	9.3E-02	4.0E-04	ND	9.1E-02	3.8E-04	ND	9.2E-02	3.4E-04	ND	9.2E-02	3.8E-04
toluene	(H)	ND	9.3E-02	3.5E-04	ND	9.1E-02	3.4E-04	ND	9.2E-02	3.0E-04	ND	9.2E-02	3.3E-04
1,2,4-trichlorobenzene	(H)	ND	9.3E-02	7.0E-04	ND	9.1E-02	6.7E-04	ND	9.2E-02	6.0E-04	ND	9.2E-02	6.6E-04
m,p-xylene	(H)	ND	9.3E-02	4.1E-04	ND	9.1E-02	3.9E-04	ND	9.2E-02	3.5E-04	ND	9.2E-02	3.8E-04
o-xylene	(H)	ND	9.3E-02	4.1E-04	ND	9.1E-02	3.9E-04	ND	9.2E-02	3.5E-04	ND	9.2E-02	3.8E-04
THC as Carbon		NA			NA			NA					
Total HAPs				1.2E-02			9.7E-03			1.4E-02			1.2E-02
Total Terpenes				4.4E-02			5.7E-02			7.6E-02			5.9E-02
Production Rate (MSF 3/8 /hr)				28.3			28.3			28.3			28.3
Vol. Flow Rate (DSCFM)				7.5E+03			7.4E+03			6.5E+03			7.1E+03
Source Moisture (%)				9.0			11.5			17.4			12.6
Source Temp (°C)				44.1			48.8			56.8			49.9

ND x.xxEx = Below detection limit of x.xxEx; BP = Below practical quantitation limit; IM = Below detection limit in impinger sample; NA = Not analyzed by this method; H = CAA HAP; N = Not a HAP or VOC as defined by US EPA; TM = Start and end times for THC and speciated compounds differ; QA = Failed quality assurance; MSF = 1000 square feet; ODTH = Oven Dried Tons per Hour; AI = Analytical Interference; MLF = 1000 Linear Feet; MCF = 1000 Cubic Feet

12/9/99
9:09 AM

Table B12. Summary of Emission Test Results
Softwood Veneer Dryer, WESP Inlet, Douglas Fir Furnish (112-XDV2)

Analyte		112-XDV2N1			112-XDV2N2			112-XDV2N3			Average Emission		
			ppmVd	lb/MSF		ppmVd	lb/MSF		ppmVd	lb/MSF		ppmVd	lb/MSF
acetaldehyde	(H)		2.1E+00	1.2E-02		4.1E+00	2.6E-02		2.9E+00	1.8E-02		3.0E+00	1.9E-02
acetone	(N)	BP	6.2E-01	4.9E-03		4.4E+00	3.7E-02		2.5E+00	2.1E-02		2.5E+00	2.1E-02
acrolein	(H)	ND	2.7E-01	2.0E-03	ND	2.9E-01	2.3E-03	ND	2.7E-01	2.2E-03	ND	2.8E-01	2.2E-03
benzene	(H)	ND	8.2E-02	8.6E-04	ND	8.3E-02	9.4E-04	ND	8.3E-02	9.4E-04	ND	8.3E-02	9.2E-04
bromomethane	(H)	ND	8.2E-02	1.0E-03	ND	8.3E-02	1.1E-03	ND	8.3E-02	1.1E-03	ND	8.3E-02	1.1E-03
camphene		ND	1.6E+00	3.0E-02	ND	1.7E+00	3.3E-02	ND	1.7E+00	3.3E-02	ND	1.7E+00	3.2E-02
3-carene		ND	1.6E+00	3.0E-02	ND	1.7E+00	3.3E-02	ND	1.7E+00	3.3E-02	ND	1.7E+00	3.2E-02
chloroethane	(H)	ND	8.2E-02	7.1E-04	ND	8.3E-02	7.7E-04	ND	8.3E-02	7.8E-04	ND	8.3E-02	7.6E-04
chloroethene	(H)	ND	8.2E-02	6.9E-04	ND	8.3E-02	7.5E-04	ND	8.3E-02	7.6E-04	ND	8.3E-02	7.3E-04
cumene	(H)	ND	1.6E+00	2.7E-02	ND	1.7E+00	2.9E-02	ND	1.7E+00	2.9E-02	ND	1.7E+00	2.8E-02
p-cymene		ND	1.6E+00	3.0E-02	ND	1.7E+00	3.2E-02	ND	1.7E+00	3.2E-02	ND	1.7E+00	3.1E-02
1,2-dichloroethane	(H)	ND	8.2E-02	1.1E-03	ND	8.3E-02	1.2E-03	ND	8.3E-02	1.2E-03	ND	8.3E-02	1.2E-03
cis-1,2-dichloroethylene		ND	8.2E-02	1.1E-03	ND	8.3E-02	1.2E-03	ND	8.3E-02	1.2E-03	ND	8.3E-02	1.1E-03
formaldehyde	(H)		1.3E+00	5.3E-03		4.2E+00	1.8E-02		4.0E+00	1.7E-02		3.2E+00	1.4E-02
limonene		ND	1.6E+00	3.0E-02	ND	1.7E+00	3.3E-02	ND	1.7E+00	3.3E-02	ND	1.7E+00	3.2E-02
p-mentha-1,5-diene		ND	1.6E+00	3.0E-02	ND	1.7E+00	3.3E-02	ND	1.7E+00	3.3E-02	ND	1.7E+00	3.2E-02
methanol	(H)		3.5E+00	1.5E-02		7.0E+00	3.2E-02		4.6E+00	2.1E-02		5.1E+00	2.3E-02
methyl ethyl ketone (MEK)	(H)	ND	2.6E-01	2.6E-03	ND	2.8E-01	3.0E-03	ND	2.6E-01	2.8E-03	ND	2.7E-01	2.8E-03
methyl isobutyl ketone	(H)	ND	1.9E-01	2.5E-03	ND	2.0E-01	2.9E-03	ND	1.9E-01	2.7E-03	ND	1.9E-01	2.7E-03
methylene chloride	(H)	ND	8.2E-02	9.4E-04	ND	8.3E-02	1.0E-03	ND	8.3E-02	1.0E-03	ND	8.3E-02	1.0E-03
phenol	(H)	ND	3.2E-01	4.1E-03	ND	3.5E-01	4.7E-03	ND	3.2E-01	4.4E-03	ND	3.3E-01	4.4E-03
alpha-pinene			8.4E+00	1.6E-01		6.6E+00	1.3E-01		6.5E+00	1.3E-01		7.2E+00	1.4E-01
beta-pinene		ND	1.6E+00	3.0E-02	ND	1.7E+00	3.3E-02	ND	1.7E+00	3.3E-02	ND	1.7E+00	3.2E-02
propionaldehyde	(H)	ND	2.9E-01	2.3E-03	ND	3.2E-01	2.6E-03	BP	3.3E-01	2.8E-03		1.1E-01	9.4E-04
styrene	(H)	ND	8.2E-02	1.2E-03	ND	8.3E-02	1.2E-03	ND	8.3E-02	1.3E-03	ND	8.3E-02	1.2E-03
toluene	(H)	ND	8.2E-02	1.0E-03	ND	8.3E-02	1.1E-03	ND	8.3E-02	1.1E-03	ND	8.3E-02	1.1E-03
1,2,4-trichlorobenzene	(H)	ND	8.2E-02	2.0E-03	ND	8.3E-02	2.2E-03	ND	8.3E-02	2.2E-03	ND	8.3E-02	2.1E-03
m,p-xylene	(H)	ND	8.2E-02	1.2E-03	ND	8.3E-02	1.3E-03	ND	8.3E-02	1.3E-03	ND	8.3E-02	1.2E-03
o-xylene	(H)	ND	8.2E-02	1.2E-03	ND	8.3E-02	1.3E-03	ND	8.3E-02	1.3E-03	ND	8.3E-02	1.2E-03
THC as Carbon			2.1E+02	3.5E-01	NA			NA				2.1E+02	3.5E-01
Total HAPs				3.3E-02			7.6E-02			6.0E-02			5.6E-02
Total Terpenes				1.6E-01			1.3E-01			1.3E-01			1.4E-01
Production Rate (MSF 3/8 /hr)				26.3			26.5			26.2			26.3
Vol. Flow Rate (DSCFM)				2.3E+04			2.5E+04			2.4E+04			2.4E+04
Source Moisture (%)				17.4			18.0			17.5			17.6
Source Temp (°C)				57.6			58.3			57.8			57.9

ND x.xxEx = Below detection limit of x.xxEx; BP = Below practical quantitation limit; IM = Below detection limit in impinger sample; NA = Not analyzed by this method; H = CAA HAP; N = Not a HAP or VOC as defined by US EPA; TM = Start and end times for THC and speciated compounds differ; QA = Failed quality assurance; MSF = 1000 square feet; ODTH = Oven Dried Tons per Hour; AI = Analytical Interference; MLF = 1000 Linear Feet; MCF = 1000 Cubic Feet

Table B13. Summary of Emission Test Results
Softwood Veneer Dryer, WESP Vent, Douglas Fir Furnish (112-XDV1)

Analyte		112-XDV1N1			112-XDV1N2			112-XDV1N3			Average Emission		
			ppmVd	lb/MSF		ppmVd	lb/MSF		ppmVd	lb/MSF		ppmVd	lb/MSF
acetaldehyde	(H)	BP	7.5E-01	4.5E-03		2.2E+00	1.4E-02	BP	8.3E-01	5.3E-03		1.3E+00	8.0E-03
acetone	(N)	BP	8.3E-01	6.6E-03	BP	5.1E-01	4.2E-03	BP	4.9E-01	4.1E-03		6.1E-01	5.0E-03
acrolein	(H)	ND	3.3E-01	2.5E-03	ND	3.0E-01	2.4E-03	ND	2.9E-01	2.4E-03	ND	3.1E-01	2.4E-03
benzene	(H)	ND	8.6E-02	9.1E-04	ND	8.8E-02	9.9E-04	ND	8.4E-02	9.5E-04	ND	8.6E-02	9.5E-04
bromomethane	(H)	ND	8.6E-02	1.1E-03	ND	8.8E-02	1.2E-03	ND	8.4E-02	1.2E-03	ND	8.6E-02	1.2E-03
camphene		ND	1.7E+00	3.2E-02	ND	1.8E+00	3.4E-02	ND	1.7E+00	3.3E-02	ND	1.7E+00	3.3E-02
3-carene		ND	1.7E+00	3.2E-02	ND	1.8E+00	3.4E-02	ND	1.7E+00	3.3E-02	ND	1.7E+00	3.3E-02
chloroethane	(H)	ND	8.6E-02	7.5E-04	ND	8.8E-02	8.1E-04	ND	8.4E-02	7.8E-04	ND	8.6E-02	7.8E-04
chloroethene	(H)	ND	8.6E-02	7.3E-04	ND	8.8E-02	7.9E-04	ND	8.4E-02	7.6E-04	ND	8.6E-02	7.6E-04
cumene	(H)	ND	1.7E+00	2.8E-02	ND	1.8E+00	3.0E-02	ND	1.7E+00	2.9E-02	ND	1.7E+00	2.9E-02
p-cymene		ND	1.7E+00	3.1E-02	ND	1.8E+00	3.4E-02	ND	1.7E+00	3.3E-02	ND	1.7E+00	3.3E-02
1,2-dichloroethane	(H)	ND	8.6E-02	1.2E-03	ND	8.8E-02	1.2E-03	ND	8.4E-02	1.2E-03	ND	8.6E-02	1.2E-03
cis-1,2-dichloroethylene		ND	8.6E-02	1.1E-03	ND	8.8E-02	1.2E-03	ND	8.4E-02	1.2E-03	ND	8.6E-02	1.2E-03
formaldehyde	(H)	BP	3.0E-01	1.2E-03		7.2E-01	3.1E-03		8.0E-01	3.5E-03		6.0E-01	2.6E-03
limonene		ND	1.7E+00	3.2E-02	ND	1.8E+00	3.4E-02	ND	1.7E+00	3.3E-02	ND	1.7E+00	3.3E-02
p-mentha-1,5-diene		ND	1.7E+00	3.2E-02	ND	1.8E+00	3.4E-02	ND	1.7E+00	3.3E-02	ND	1.7E+00	3.3E-02
methanol	(H)		3.9E+00	1.7E-02		3.9E+00	1.8E-02		3.9E+00	1.8E-02		3.9E+00	1.8E-02
methyl ethyl ketone (MEK)	(H)	ND	3.2E-01	3.1E-03	ND	2.9E-01	3.0E-03	ND	2.8E-01	3.0E-03	ND	3.0E-01	3.1E-03
methyl isobutyl ketone	(H)	ND	2.2E-01	3.0E-03	ND	2.1E-01	3.0E-03	ND	2.0E-01	2.9E-03	ND	2.1E-01	3.0E-03
methylene chloride	(H)	ND	8.6E-02	9.9E-04	ND	8.8E-02	1.1E-03	ND	8.4E-02	1.0E-03	ND	8.6E-02	1.0E-03
phenol	(H)	ND	4.0E-01	5.1E-03	ND	3.6E-01	4.9E-03	ND	3.5E-01	4.8E-03	ND	3.7E-01	4.9E-03
alpha-pinene			1.2E+01	2.3E-01		9.1E+00	1.8E-01		1.0E+01	2.0E-01		1.1E+01	2.0E-01
beta-pinene		ND	1.7E+00	3.2E-02	ND	1.8E+00	3.4E-02	ND	1.7E+00	3.3E-02	ND	1.7E+00	3.3E-02
propionaldehyde	(H)	ND	3.6E-01	2.8E-03	ND	3.3E-01	2.7E-03	ND	3.2E-01	2.7E-03	ND	3.3E-01	2.7E-03
styrene	(H)	ND	8.6E-02	1.2E-03	ND	8.8E-02	1.3E-03	ND	8.4E-02	1.3E-03	ND	8.6E-02	1.3E-03
toluene	(H)	ND	8.6E-02	1.1E-03	ND	8.8E-02	1.2E-03	ND	8.4E-02	1.1E-03	ND	8.6E-02	1.1E-03
1,2,4-trichlorobenzene	(H)	ND	8.6E-02	2.1E-03	ND	8.8E-02	2.3E-03	ND	8.4E-02	2.2E-03	ND	8.6E-02	2.2E-03
m,p-xylene	(H)	ND	8.6E-02	1.2E-03	ND	8.8E-02	1.3E-03	ND	8.4E-02	1.3E-03	ND	8.6E-02	1.3E-03
o-xylene	(H)	ND	8.6E-02	1.2E-03	ND	8.8E-02	1.3E-03	ND	8.4E-02	1.3E-03	ND	8.6E-02	1.3E-03
THC as Carbon		NA				2.7E+02	4.8E-01		2.2E+02	3.8E-01		2.5E+02	4.3E-01
Total HAPs				2.3E-02			3.5E-02			2.7E-02			2.8E-02
Total Terpenes				2.3E-01			1.8E-01			2.0E-01			2.0E-01
Production Rate (MSF 3/8 /hr)				26.3			26.5			26.2			26.3
Vol. Flow Rate (DSCFM)				2.3E+04			2.5E+04			2.4E+04			2.4E+04
Source Moisture (%)				17.4			18.0			17.5			17.6
Source Temp (°C)				57.6			58.3			57.8			57.9

ND x.xxEx = Below detection limit of x.xxEx; BP = Below practical quantitation limit; IM = Below detection limit in impinger sample; NA = Not analyzed by this method; H = CAA HAP; N = Not a HAP or VOC as defined by US EPA; TM = Start and end times for THC and speciated compounds differ; QA = Failed quality assurance; MSF = 1000 square feet; ODTH = Oven Dried Tons per Hour; AI = Analytical Interference; MLF = 1000 Linear Feet; MCF = 1000 Cubic Feet

12/9/99
9:09 AM

Table B14. Summary of Emission Test Results
Softwood Veneer Dryer, WESP Inlet, Pine/Fir Furnish (112-XDV2)

Analyte		112-XDV2N4			112-XDV2N5			112-XDV2N6			Average Emission		
			ppmVd	lb/MSF		ppmVd	lb/MSF		ppmVd	lb/MSF		ppmVd	lb/MSF
acetaldehyde	(H)		1.9E+00	2.2E-02		5.8E+00	3.5E-02		6.1E+00	4.9E-02		4.6E+00	3.5E-02
acetone	(N)		1.0E+00	1.6E-02		3.5E+00	2.8E-02		4.0E+00	4.2E-02		2.8E+00	2.9E-02
acrolein	(H)	ND	2.8E-01	4.2E-03	ND	3.1E-01	2.4E-03	IM	2.9E-01	3.0E-03		9.7E-02	9.9E-04
benzene	(H)	ND	9.0E-02	1.8E-03		6.0E-01	6.5E-03		5.8E-01	8.3E-03		3.9E-01	4.9E-03
bromomethane	(H)	ND	9.0E-02	2.2E-03	ND	1.1E-01	1.5E-03	ND	8.8E-02	1.5E-03	ND	9.7E-02	1.8E-03
camphene		ND	1.8E+00	6.4E-02	ND	2.3E+00	4.3E-02	ND	1.8E+00	4.4E-02	ND	1.9E+00	5.0E-02
3-carene			5.0E+00	1.8E-01		2.7E+00	5.1E-02		1.8E+00	4.5E-02		3.2E+00	9.1E-02
chloroethane	(H)	ND	9.0E-02	1.5E-03	ND	1.1E-01	1.0E-03	ND	8.8E-02	1.0E-03	ND	9.7E-02	1.2E-03
chloroethene	(H)	ND	9.0E-02	1.5E-03	ND	1.1E-01	9.9E-04	ND	8.8E-02	1.0E-03	ND	9.7E-02	1.2E-03
cumene	(H)	ND	1.8E+00	5.7E-02	ND	2.3E+00	3.8E-02	ND	1.8E+00	3.9E-02	ND	1.9E+00	4.4E-02
p-cymene		ND	1.8E+00	6.3E-02	ND	2.3E+00	4.2E-02	ND	1.8E+00	4.3E-02	ND	1.9E+00	5.0E-02
1,2-dichloroethane	(H)	ND	9.0E-02	2.3E-03	ND	1.1E-01	1.6E-03	ND	8.8E-02	1.6E-03	ND	9.7E-02	1.8E-03
cis-1,2-dichloroethylene		ND	9.0E-02	2.3E-03	ND	1.1E-01	1.5E-03	ND	8.8E-02	1.6E-03	ND	9.7E-02	1.8E-03
formaldehyde	(H)		1.6E+00	1.2E-02		2.8E+01	1.2E-01		3.1E+01	1.7E-01		2.0E+01	9.9E-02
limonene		ND	1.8E+00	6.4E-02	ND	2.3E+00	4.3E-02	ND	1.8E+00	4.4E-02	ND	1.9E+00	5.0E-02
p-mentha-1,5-diene		ND	1.8E+00	6.4E-02	ND	2.3E+00	4.3E-02	ND	1.8E+00	4.4E-02	ND	1.9E+00	5.0E-02
methanol	(H)		4.5E+00	3.8E-02		4.7E+00	2.1E-02		4.1E+00	2.4E-02		4.4E+00	2.8E-02
methyl ethyl ketone (MEK)	(H)	ND	2.8E-01	5.3E-03	ND	3.0E-01	3.0E-03	ND	2.8E-01	3.7E-03	ND	2.9E-01	4.0E-03
methyl isobutyl ketone	(H)	ND	2.0E-01	5.2E-03	ND	2.2E-01	3.1E-03	ND	2.0E-01	3.6E-03	ND	2.1E-01	4.0E-03
methylene chloride	(H)	ND	9.0E-02	2.0E-03	ND	1.1E-01	1.3E-03	ND	8.8E-02	1.4E-03	ND	9.7E-02	1.6E-03
phenol	(H)	ND	3.4E-01	8.4E-03	ND	3.6E-01	4.7E-03	ND	3.5E-01	5.9E-03	ND	3.5E-01	6.4E-03
alpha-pinene			4.4E+00	1.6E-01	ND	2.3E+00	4.3E-02	ND	1.8E+00	4.4E-02		1.5E+00	5.2E-02
beta-pinene		ND	1.8E+00	6.4E-02	ND	2.3E+00	4.3E-02	ND	1.8E+00	4.4E-02	ND	1.9E+00	5.0E-02
propionaldehyde	(H)	BP	5.1E-01	7.8E-03	BP	4.7E-01	3.8E-03	BP	5.8E-01	6.1E-03		5.2E-01	5.9E-03
styrene	(H)	ND	9.0E-02	2.4E-03	ND	1.1E-01	1.6E-03	ND	8.8E-02	1.7E-03	ND	9.7E-02	1.9E-03
toluene	(H)	ND	9.0E-02	2.2E-03		7.9E-01	1.0E-02		3.0E+00	5.0E-02		1.3E+00	2.0E-02
1,2,4-trichlorobenzene	(H)	ND	9.0E-02	4.3E-03	ND	1.1E-01	2.9E-03	ND	8.8E-02	2.9E-03	ND	9.7E-02	3.3E-03
m,p-xylene	(H)	ND	9.0E-02	2.5E-03		2.3E-01	3.4E-03		4.2E-01	8.0E-03		2.2E-01	3.8E-03
o-xylene	(H)	ND	9.0E-02	2.5E-03	ND	1.1E-01	1.7E-03	ND	8.8E-02	1.7E-03	ND	9.7E-02	2.0E-03
THC as Carbon			2.3E+02	7.2E-01	NA			NA				2.3E+02	7.2E-01
Total HAPs				8.0E-02			2.0E-01			3.2E-01			2.0E-01
Total Terpenes				3.3E-01			5.1E-02			4.5E-02			1.4E-01
Production Rate (MSF 3/8 /hr)				15.9			29.7			23.9			23.2
Vol. Flow Rate (DSCFM)				2.7E+04			2.6E+04			2.8E+04			2.7E+04
Source Moisture (%)				15.0			14.6			14.3			14.6
Source Temp (°C)				56.3			56.3			54.4			55.7

ND x.xxEx = Below detection limit of x.xxEx; BP = Below practical quantitation limit; IM = Below detection limit in impinger sample; NA = Not analyzed by this method; H = CAA HAP; N = Not a HAP or VOC as defined by US EPA; TM = Start and end times for THC and speciated compounds differ; QA = Failed quality assurance; MSF = 1000 square feet; ODTH = Oven Dried Tons per Hour; AI = Analytical Interference; MLF = 1000 Linear Feet; MCF = 1000 Cubic Feet

12/9/99
9:09 AM

Table B15. Summary of Emission Test Results
Softwood Veneer Dryer, WESP Vent, Pine/Fir Furnish (112-XDV1)

Analyte		112-XDV1N4			112-XDV1N5			112-XDV1N6			Average Emission		
			ppmVd	lb/MSF		ppmVd	lb/MSF		ppmVd	lb/MSF		ppmVd	lb/MSF
acetaldehyde	(H)	BP	9.8E-01	1.1E-02	ND	5.1E-01	3.1E-03	BP	1.0E+00	8.0E-03		6.6E-01	6.5E-03
acetone	(N)		8.0E-01	1.2E-02	BP	5.4E-01	4.3E-03	BP	5.0E-01	5.3E-03		6.1E-01	7.3E-03
acrolein	(H)	ND	3.1E-01	4.6E-03	ND	3.7E-01	2.9E-03	ND	2.9E-01	3.0E-03	ND	3.2E-01	3.5E-03
benzene	(H)	ND	9.0E-02	1.8E-03	ND	1.3E-01	1.4E-03	ND	8.6E-02	1.2E-03	ND	1.0E-01	1.5E-03
bromomethane	(H)	ND	9.0E-02	2.2E-03	ND	1.3E-01	1.7E-03	ND	8.6E-02	1.5E-03	ND	1.0E-01	1.8E-03
camphene		ND	1.8E+00	6.4E-02	ND	2.5E+00	4.8E-02	ND	1.7E+00	4.3E-02	ND	2.0E+00	5.1E-02
3-carene			5.7E+00	2.0E-01		4.5E+00	8.6E-02		5.3E+00	1.3E-01		5.2E+00	1.4E-01
chloroethane	(H)	ND	9.0E-02	1.5E-03	ND	1.3E-01	1.1E-03	ND	8.6E-02	1.0E-03	ND	1.0E-01	1.2E-03
chloroethene	(H)	ND	9.0E-02	1.5E-03	ND	1.3E-01	1.1E-03	ND	8.6E-02	9.8E-04	ND	1.0E-01	1.2E-03
cumene	(H)	ND	1.8E+00	5.6E-02	ND	2.5E+00	4.2E-02	ND	1.7E+00	3.8E-02	ND	2.0E+00	4.5E-02
p-cymene		ND	1.8E+00	6.3E-02	ND	2.5E+00	4.7E-02	ND	1.7E+00	4.2E-02	ND	2.0E+00	5.1E-02
1,2-dichloroethane	(H)	ND	9.0E-02	2.3E-03	ND	1.3E-01	1.7E-03	ND	8.6E-02	1.6E-03	ND	1.0E-01	1.9E-03
cis-1,2-dichloroethylene		ND	9.0E-02	2.3E-03	ND	1.3E-01	1.7E-03	ND	8.6E-02	1.5E-03	ND	1.0E-01	1.8E-03
formaldehyde	(H)		1.1E+00	9.0E-03	BP	4.7E-01	1.9E-03		6.9E-01	3.8E-03		7.7E-01	4.9E-03
limonene		ND	1.8E+00	6.4E-02	ND	2.5E+00	4.8E-02	ND	1.7E+00	4.3E-02	ND	2.0E+00	5.1E-02
p-mentha-1,5-diene		ND	1.8E+00	6.4E-02	ND	2.5E+00	4.8E-02	ND	1.7E+00	4.3E-02	ND	2.0E+00	5.1E-02
methanol	(H)		6.0E+00	5.0E-02		2.8E+00	1.2E-02		3.9E+00	2.3E-02		4.2E+00	2.9E-02
methyl ethyl ketone (MEK)	(H)	ND	3.1E-01	5.8E-03	ND	3.6E-01	3.6E-03	ND	2.9E-01	3.8E-03	ND	3.2E-01	4.4E-03
methyl isobutyl ketone	(H)	ND	2.1E-01	5.6E-03	ND	2.6E-01	3.6E-03	ND	2.0E-01	3.7E-03	ND	2.3E-01	4.3E-03
methylene chloride	(H)	ND	9.0E-02	2.0E-03	ND	1.3E-01	1.5E-03	ND	8.6E-02	1.3E-03	ND	1.0E-01	1.6E-03
phenol	(H)	ND	3.8E-01	9.3E-03	ND	4.4E-01	5.7E-03	ND	3.5E-01	6.1E-03	ND	3.9E-01	7.0E-03
alpha-pinene			4.4E+00	1.6E-01		4.3E+00	8.1E-02		5.8E+00	1.4E-01		4.8E+00	1.3E-01
beta-pinene			1.8E+00	6.5E-02	ND	2.5E+00	4.8E-02		1.9E+00	4.8E-02		1.3E+00	3.8E-02
propionaldehyde	(H)	ND	3.4E-01	5.2E-03	ND	4.0E-01	3.2E-03	ND	3.2E-01	3.4E-03	ND	3.5E-01	3.9E-03
styrene	(H)	ND	9.0E-02	2.4E-03	ND	1.3E-01	1.8E-03	ND	8.6E-02	1.6E-03	ND	1.0E-01	2.0E-03
toluene	(H)	ND	9.0E-02	2.2E-03	ND	1.3E-01	1.6E-03	ND	8.6E-02	1.4E-03	ND	1.0E-01	1.7E-03
1,2,4-trichlorobenzene	(H)	ND	9.0E-02	4.3E-03	ND	1.3E-01	3.2E-03	ND	8.6E-02	2.9E-03	ND	1.0E-01	3.4E-03
m,p-xylene	(H)	ND	9.0E-02	2.5E-03	ND	1.3E-01	1.9E-03	ND	8.6E-02	1.7E-03	ND	1.0E-01	2.0E-03
o-xylene	(H)	ND	9.0E-02	2.5E-03	ND	1.3E-01	1.9E-03	ND	8.6E-02	1.7E-03	ND	1.0E-01	2.0E-03
THC as Carbon		NA			TM	2.4E+02	4.0E-01		3.0E+02	6.6E-01		2.7E+02	5.3E-01
Total HAPs				7.1E-02			1.4E-02			3.5E-02			4.0E-02
Total Terpenes				4.2E-01			1.7E-01			3.2E-01			3.0E-01
Production Rate (MSF 3/8 /hr)				15.9			29.7			23.9			23.2
Vol. Flow Rate (DSCFM)				2.7E+04			2.6E+04			2.8E+04			2.7E+04
Source Moisture (%)				15.0			14.6			14.3			14.6
Source Temp (°C)				56.3			56.3			54.4			55.7

ND x.xxEx = Below detection limit of x.xxEx; BP = Below practical quantitation limit; IM = Below detection limit in impinger sample; NA = Not analyzed by this method; H = CAA HAP; N = Not a HAP or VOC as defined by US EPA; TM = Start and end times for THC and speciated compounds differ; QA = Failed quality assurance; MSF = 1000 square feet; ODTH = Oven Dried Tons per Hour; AI = Analytical Interference; MLF = 1000 Linear Feet; MCF = 1000 Cubic Feet

12/9/99
9:09 AM

Table B16. Summary of Emission Test Results
Softwood Veneer Dryer, Combined Dryer Exhaust at Inlet to ESP (115-XDV2)

Analyte		115-XDV2N1			115-XDV2N2			115-XDV2N3			Average Emission		
			ppmVd	lb/MSF		ppmVd	lb/MSF		ppmVd	lb/MSF		ppmVd	lb/MSF
acetaldehyde	(H)		2.6E+00	2.7E-02		4.4E+00	4.0E-02		4.1E+00	3.8E-02		3.7E+00	3.5E-02
acetone	(N)		3.0E+00	4.2E-02		2.5E+00	3.1E-02		1.9E+00	2.3E-02		2.5E+00	3.2E-02
acrolein	(H)	ND	3.4E-01	4.5E-03	ND	3.8E-01	4.4E-03	ND	4.1E-01	4.8E-03	ND	3.7E-01	4.6E-03
benzene	(H)	ND	8.8E-02	1.6E-03	ND	9.0E-02	1.5E-03	ND	8.5E-02	1.4E-03	ND	8.8E-02	1.5E-03
bromomethane	(H)	ND	8.8E-02	2.0E-03	ND	9.0E-02	1.8E-03	ND	8.5E-02	1.7E-03	ND	8.8E-02	1.8E-03
camphene		ND	1.8E+00	5.7E-02	ND	1.8E+00	5.1E-02	ND	1.7E+00	4.9E-02	ND	1.8E+00	5.3E-02
3-carene		ND	1.8E+00	5.7E-02	ND	1.8E+00	5.1E-02	ND	1.7E+00	4.9E-02	ND	1.8E+00	5.3E-02
chloroethane	(H)	ND	8.8E-02	1.4E-03	ND	9.0E-02	1.2E-03	ND	8.5E-02	1.2E-03	ND	8.8E-02	1.2E-03
chloroethene	(H)	ND	8.8E-02	1.3E-03	ND	9.0E-02	1.2E-03	ND	8.5E-02	1.1E-03	ND	8.8E-02	1.2E-03
cumene	(H)	ND	1.8E+00	5.0E-02	ND	1.8E+00	4.5E-02	ND	1.7E+00	4.3E-02	ND	1.8E+00	4.6E-02
p-cymene		ND	1.8E+00	5.6E-02	ND	1.8E+00	5.0E-02	ND	1.7E+00	4.8E-02	ND	1.8E+00	5.2E-02
1,2-dichloroethane	(H)	ND	8.8E-02	2.1E-03	ND	9.0E-02	1.9E-03	ND	8.5E-02	1.8E-03	ND	8.8E-02	1.9E-03
cis-1,2-dichloroethylene		ND	8.8E-02	2.0E-03	ND	9.0E-02	1.8E-03	ND	8.5E-02	1.7E-03	ND	8.8E-02	1.9E-03
formaldehyde	(H)		6.7E+00	4.8E-02		6.4E+00	4.0E-02		4.8E+00	3.1E-02		6.0E+00	4.0E-02
limonene		ND	1.8E+00	5.7E-02	ND	1.8E+00	5.1E-02	ND	1.7E+00	4.9E-02	ND	1.8E+00	5.3E-02
p-mentha-1,5-diene		ND	1.8E+00	5.7E-02	ND	1.8E+00	5.1E-02	ND	1.7E+00	4.9E-02	ND	1.8E+00	5.3E-02
methanol	(H)		4.7E+00	3.6E-02		1.1E+01	7.3E-02		1.3E+01	9.0E-02		9.7E+00	6.6E-02
methyl ethyl ketone (MEK)	(H)	ND	3.3E-01	5.7E-03	ND	3.7E-01	5.6E-03	ND	4.0E-01	6.1E-03	ND	3.7E-01	5.8E-03
methyl isobutyl ketone	(H)	ND	2.3E-01	5.4E-03	ND	2.5E-01	5.3E-03	ND	2.6E-01	5.6E-03	ND	2.5E-01	5.4E-03
methylene chloride	(H)	ND	8.8E-02	1.8E-03	ND	9.0E-02	1.6E-03	ND	8.5E-02	1.5E-03	ND	8.8E-02	1.6E-03
phenol	(H)	BP	6.5E-01	1.5E-02	ND	4.6E-01	9.1E-03	ND	5.0E-01	9.9E-03		2.2E-01	4.9E-03
alpha-pinene		ND	1.8E+00	5.7E-02	ND	1.8E+00	5.1E-02	ND	1.7E+00	4.9E-02	ND	1.8E+00	5.3E-02
beta-pinene		ND	1.8E+00	5.7E-02	ND	1.8E+00	5.1E-02	ND	1.7E+00	4.9E-02	ND	1.8E+00	5.3E-02
propionaldehyde	(H)		2.5E+00	3.5E-02	BP	5.4E-01	6.6E-03	BP	7.1E-01	8.8E-03		1.3E+00	1.7E-02
styrene	(H)	ND	8.8E-02	2.2E-03	ND	9.0E-02	2.0E-03	ND	8.5E-02	1.9E-03	ND	8.8E-02	2.0E-03
toluene	(H)	ND	8.8E-02	1.9E-03	ND	9.0E-02	1.7E-03	ND	8.5E-02	1.7E-03	ND	8.8E-02	1.8E-03
1,2,4-trichlorobenzene	(H)	ND	8.8E-02	3.8E-03	ND	9.0E-02	3.4E-03	ND	8.5E-02	3.3E-03	ND	8.8E-02	3.5E-03
m,p-xylene	(H)	ND	8.8E-02	2.2E-03	ND	9.0E-02	2.0E-03	ND	8.5E-02	1.9E-03	ND	8.8E-02	2.0E-03
o-xylene	(H)	ND	8.8E-02	2.2E-03	ND	9.0E-02	2.0E-03	ND	8.5E-02	1.9E-03	ND	8.8E-02	2.0E-03
THC as Carbon			6.6E+01	1.9E-01		6.8E+01	1.7E-01		5.9E+01	1.5E-01		6.4E+01	1.7E-01
Total HAPs				1.6E-01			1.6E-01			1.7E-01			1.6E-01
Total Terpenes				0.0E+00			0.0E+00			0.0E+00			0.0E+00
Production Rate (MSF 3/8 /hr)				18.6			18.6			16.9			18.0
Vol. Flow Rate (DSCFM)				2.9E+04			2.5E+04			2.3E+04			2.6E+04
Source Moisture (%)				27.0			28.1			28.4			27.8
Source Temp (°C)				66.9			67.9			68.1			67.6

ND x.xxEx = Below detection limit of x.xxEx; BP = Below practical quantitation limit; IM = Below detection limit in impinger sample; NA = Not analyzed by this method; H = CAA HAP; N = Not a HAP or VOC as defined by US EPA; TM = Start and end times for THC and speciated compounds differ; QA = Failed quality assurance; MSF = 1000 square feet; ODTH = Oven Dried Tons per Hour; AI = Analytical Interference; MLF = 1000 Linear Feet; MCF = 1000 Cubic Feet

Table B17. Summary of Emission Test Results
Softwood Veneer Dryer, Dryer No. 1, Veneer Cooling Section Exhaust No. 2 (115-1DV4)

Analyte		115-1DV4N1			115-1DV4N2			115-1DV4N3			Average Emission		
			ppmVd	lb/MSF		ppmVd	lb/MSF		ppmVd	lb/MSF		ppmVd	lb/MSF
acetaldehyde	(H)	ND	3.7E-01	3.6E-03	BP	4.3E-01	4.4E-03	ND	3.8E-01	3.8E-03		1.4E-01	1.5E-03
acetone	(N)	IM	4.5E-01	5.8E-03	IM	3.8E-01	5.1E-03	IM	3.4E-01	4.6E-03		3.9E-01	5.2E-03
acrolein	(H)	ND	2.7E-01	3.3E-03	ND	2.8E-01	3.6E-03	ND	2.7E-01	3.5E-03	ND	2.7E-01	3.5E-03
benzene	(H)	ND	8.8E-02	1.5E-03	ND	8.6E-02	1.5E-03	ND	8.9E-02	1.6E-03	ND	8.8E-02	1.6E-03
bromomethane	(H)	ND	8.8E-02	1.9E-03	ND	8.6E-02	1.9E-03	ND	8.9E-02	1.9E-03	ND	8.8E-02	1.9E-03
camphene		ND	1.8E+00	5.3E-02	ND	1.7E+00	5.4E-02	ND	1.8E+00	5.6E-02	ND	1.8E+00	5.4E-02
3-carene		ND	1.8E+00	5.3E-02	ND	1.7E+00	5.4E-02	ND	1.8E+00	5.6E-02	ND	1.8E+00	5.4E-02
chloroethane	(H)	ND	8.8E-02	1.3E-03	ND	8.6E-02	1.3E-03	ND	8.9E-02	1.3E-03	ND	8.8E-02	1.3E-03
chloroethene	(H)	ND	8.8E-02	1.2E-03	ND	8.6E-02	1.2E-03	ND	8.9E-02	1.3E-03	ND	8.8E-02	1.2E-03
cumene	(H)	ND	1.8E+00	4.7E-02	ND	1.7E+00	4.8E-02	ND	1.8E+00	4.9E-02	ND	1.8E+00	4.8E-02
p-cymene		ND	1.8E+00	5.3E-02	ND	1.7E+00	5.3E-02	ND	1.8E+00	5.5E-02	ND	1.8E+00	5.3E-02
1,2-dichloroethane	(H)	ND	8.8E-02	1.9E-03	ND	8.6E-02	2.0E-03	ND	8.9E-02	2.0E-03	ND	8.8E-02	2.0E-03
cis-1,2-dichloroethylene		ND	8.8E-02	1.9E-03	ND	8.6E-02	1.9E-03	ND	8.9E-02	2.0E-03	ND	8.8E-02	1.9E-03
formaldehyde	(H)	ND	1.4E-01	9.2E-04	ND	1.5E-01	1.0E-03	ND	1.4E-01	9.7E-04	ND	1.4E-01	9.7E-04
limonene		ND	1.8E+00	5.3E-02	ND	1.7E+00	5.4E-02	ND	1.8E+00	5.6E-02	ND	1.8E+00	5.4E-02
p-mentha-1,5-diene		ND	1.8E+00	5.3E-02	ND	1.7E+00	5.4E-02	ND	1.8E+00	5.6E-02	ND	1.8E+00	5.4E-02
methanol	(H)	BP	5.5E-01	3.9E-03	ND	5.0E-01	3.7E-03	BP	5.5E-01	4.0E-03		3.7E-01	2.7E-03
methyl ethyl ketone (MEK)	(H)	ND	2.6E-01	4.2E-03	ND	2.7E-01	4.5E-03	ND	2.6E-01	4.4E-03	ND	2.7E-01	4.4E-03
methyl isobutyl ketone	(H)	ND	1.9E-01	4.2E-03	ND	1.9E-01	4.5E-03	ND	1.9E-01	4.4E-03	ND	1.9E-01	4.3E-03
methylene chloride	(H)	ND	8.8E-02	1.7E-03	ND	8.6E-02	1.7E-03	ND	8.9E-02	1.7E-03	ND	8.8E-02	1.7E-03
phenol	(H)	ND	3.2E-01	6.6E-03	ND	3.3E-01	7.2E-03	ND	3.2E-01	7.0E-03	ND	3.2E-01	6.9E-03
alpha-pinene		ND	1.8E+00	5.3E-02	ND	1.7E+00	5.4E-02	ND	1.8E+00	5.6E-02	ND	1.8E+00	5.4E-02
beta-pinene		ND	1.8E+00	5.3E-02	ND	1.7E+00	5.4E-02	ND	1.8E+00	5.6E-02	ND	1.8E+00	5.4E-02
propionaldehyde	(H)	ND	2.9E-01	3.7E-03	ND	3.0E-01	4.0E-03	ND	2.9E-01	3.9E-03	ND	2.9E-01	3.9E-03
styrene	(H)	ND	8.8E-02	2.0E-03	ND	8.6E-02	2.1E-03	ND	8.9E-02	2.1E-03	ND	8.8E-02	2.1E-03
toluene	(H)	ND	8.8E-02	1.8E-03	ND	8.6E-02	1.8E-03	ND	8.9E-02	1.9E-03	ND	8.8E-02	1.8E-03
1,2,4-trichlorobenzene	(H)	ND	8.8E-02	3.6E-03	ND	8.6E-02	3.6E-03	ND	8.9E-02	3.7E-03	ND	8.8E-02	3.6E-03
m,p-xylene	(H)	ND	8.8E-02	2.1E-03	ND	8.6E-02	2.1E-03	ND	8.9E-02	2.2E-03	ND	8.8E-02	2.1E-03
o-xylene	(H)	ND	8.8E-02	2.1E-03	ND	8.6E-02	2.1E-03	ND	8.9E-02	2.2E-03	ND	8.8E-02	2.1E-03
THC as Carbon			4.6E+00	1.2E-02		3.0E+00	8.4E-03		1.6E+00	4.6E-03		3.1E+00	8.4E-03
Total HAPs				3.9E-03			4.4E-03			4.0E-03			4.1E-03
Total Terpenes				0.0E+00			0.0E+00			0.0E+00			0.0E+00
Production Rate (MSF 3/8 /hr)				7.5			7.2			7.2			7.3
Vol. Flow Rate (DSCFM)				1.1E+04			1.1E+04			1.1E+04			1.1E+04
Source Moisture (%)				1.2			1.5			1.8			1.5
Source Temp (°C)				45.8			43.9			42.2			44.0

ND x.xxEx = Below detection limit of x.xxEx; BP = Below practical quantitation limit; IM = Below detection limit in impinger sample; NA = Not analyzed by this method; H = CAA HAP; N = Not a HAP or VOC as defined by US EPA; TM = Start and end times for THC and speciated compounds differ; QA = Failed quality assurance; MSF = 1000 square feet; ODTH = Oven Dried Tons per Hour; AI = Analytical Interference; MLF = 1000 Linear Feet; MCF = 1000 Cubic Feet

12/9/99
9:09 AM

Table B18. Summary of Emission Test Results
Softwood Veneer Dryer, Dryer No. 1, Veneer Cooling Section Exhaust No. 1 (115-1DV3)

Analyte		115-1DV3N1			115-1DV3N2			115-1DV3N3			Average Emission		
			ppmVd	lb/MSF		ppmVd	lb/MSF		ppmVd	lb/MSF		ppmVd	lb/MSF
acetaldehyde	(H)	ND	3.8E-01	4.5E-03	ND	4.0E-01	4.6E-03	ND	3.9E-01	3.9E-03	ND	3.9E-01	4.3E-03
acetone	(N)	IM	3.2E-01	5.1E-03	IM	4.5E-01	6.9E-03	IM	4.1E-01	5.3E-03		3.9E-01	5.8E-03
acrolein	(H)	ND	2.7E-01	4.1E-03	ND	2.8E-01	4.2E-03	ND	2.8E-01	3.6E-03	ND	2.8E-01	3.9E-03
benzene	(H)	ND	8.5E-02	1.8E-03	ND	8.9E-02	1.8E-03	ND	1.0E-01	1.8E-03	ND	9.1E-02	1.8E-03
bromomethane	(H)	ND	8.5E-02	2.2E-03	ND	8.9E-02	2.2E-03	ND	1.0E-01	2.2E-03	ND	9.1E-02	2.2E-03
camphene		ND	1.7E+00	6.2E-02	ND	1.8E+00	6.4E-02	ND	2.0E+00	6.2E-02	ND	1.8E+00	6.3E-02
3-carene		ND	1.7E+00	6.2E-02	ND	1.8E+00	6.4E-02	ND	2.0E+00	6.2E-02	ND	1.8E+00	6.3E-02
chloroethane	(H)	ND	8.5E-02	1.5E-03	ND	8.9E-02	1.5E-03	ND	1.0E-01	1.5E-03	ND	9.1E-02	1.5E-03
chloroethene	(H)	ND	8.5E-02	1.4E-03	ND	8.9E-02	1.5E-03	ND	1.0E-01	1.4E-03	ND	9.1E-02	1.4E-03
cumene	(H)	ND	1.7E+00	5.5E-02	ND	1.8E+00	5.6E-02	ND	2.0E+00	5.5E-02	ND	1.8E+00	5.5E-02
p-cymene		ND	1.7E+00	6.1E-02	ND	1.8E+00	6.3E-02	ND	2.0E+00	6.1E-02	ND	1.8E+00	6.2E-02
1,2-dichloroethane	(H)	ND	8.5E-02	2.3E-03	ND	8.9E-02	2.3E-03	ND	1.0E-01	2.2E-03	ND	9.1E-02	2.3E-03
cis-1,2-dichloroethylene		ND	8.5E-02	2.2E-03	ND	8.9E-02	2.3E-03	ND	1.0E-01	2.2E-03	ND	9.1E-02	2.2E-03
formaldehyde	(H)	ND	1.4E-01	1.2E-03	ND	1.5E-01	1.2E-03	ND	1.4E-01	9.5E-04	ND	1.4E-01	1.1E-03
limonene		ND	1.7E+00	6.2E-02	ND	1.8E+00	6.4E-02	ND	2.0E+00	6.2E-02	ND	1.8E+00	6.3E-02
p-mentha-1,5-diene		ND	1.7E+00	6.2E-02	ND	1.8E+00	6.4E-02	ND	2.0E+00	6.2E-02	ND	1.8E+00	6.3E-02
methanol	(H)	ND	4.9E-01	4.2E-03	ND	5.1E-01	4.3E-03	ND	5.0E-01	3.6E-03	ND	5.0E-01	4.0E-03
methyl ethyl ketone (MEK)	(H)	ND	2.6E-01	5.1E-03	ND	2.8E-01	5.3E-03	ND	2.8E-01	4.5E-03	ND	2.7E-01	5.0E-03
methyl isobutyl ketone	(H)	ND	1.9E-01	5.1E-03	ND	2.0E-01	5.2E-03	ND	2.0E-01	4.6E-03	ND	2.0E-01	4.9E-03
methylene chloride	(H)	ND	8.5E-02	1.9E-03	ND	8.9E-02	2.0E-03	ND	1.0E-01	1.9E-03	ND	9.1E-02	2.0E-03
phenol	(H)	ND	3.2E-01	8.2E-03	ND	3.4E-01	8.4E-03	ND	3.3E-01	7.1E-03	ND	3.3E-01	7.9E-03
alpha-pinene		ND	1.7E+00	6.2E-02	ND	1.8E+00	6.4E-02	ND	2.0E+00	6.2E-02	ND	1.8E+00	6.3E-02
beta-pinene		ND	1.7E+00	6.2E-02	ND	1.8E+00	6.4E-02	ND	2.0E+00	6.2E-02	ND	1.8E+00	6.3E-02
propionaldehyde	(H)	ND	2.9E-01	4.6E-03	ND	3.1E-01	4.7E-03	ND	3.0E-01	4.0E-03	ND	3.0E-01	4.4E-03
styrene	(H)	ND	8.5E-02	2.4E-03	ND	8.9E-02	2.4E-03	ND	1.0E-01	2.4E-03	ND	9.1E-02	2.4E-03
toluene	(H)	ND	8.5E-02	2.1E-03	ND	8.9E-02	2.2E-03	ND	1.0E-01	2.1E-03	ND	9.1E-02	2.1E-03
1,2,4-trichlorobenzene	(H)	ND	8.5E-02	4.1E-03	ND	8.9E-02	4.2E-03	ND	1.0E-01	4.1E-03	ND	9.1E-02	4.2E-03
m,p-xylene	(H)	ND	8.5E-02	2.4E-03	ND	8.9E-02	2.5E-03	ND	1.0E-01	2.4E-03	ND	9.1E-02	2.4E-03
o-xylene	(H)	ND	8.5E-02	2.4E-03	ND	8.9E-02	2.5E-03	ND	1.0E-01	2.4E-03	ND	9.1E-02	2.4E-03
THC as Carbon		NA			NA			NA					
Total HAPs				0.0E+00			0.0E+00			0.0E+00			0.0E+00
Total Terpenes				0.0E+00			0.0E+00			0.0E+00			0.0E+00
Production Rate (MSF 3/8 /hr)				7.1			7.1			8.2			7.5
Vol. Flow Rate (DSCFM)				1.2E+04			1.2E+04			1.2E+04			1.2E+04
Source Moisture (%)				1.5			1.3			1.4			1.4
Source Temp (°C)				34.8			33.6			34.1			34.1

ND x.xxEx = Below detection limit of x.xxEx; BP = Below practical quantitation limit; IM = Below detection limit in impinger sample; NA = Not analyzed by this method; H = CAA HAP; N = Not a HAP or VOC as defined by US EPA; TM = Start and end times for THC and speciated compounds differ; QA = Failed quality assurance; MSF = 1000 square feet; ODTH = Oven Dried Tons per Hour; AI = Analytical Interference; MLF = 1000 Linear Feet; MCF = 1000 Cubic Feet

Table B19. Summary of Emission Test Results
Softwood Veneer Dryer, Dryer No. 2, Veneer Cooling Section Exhaust No. 2 (115-2DV4)

Analyte		115-2DV4N1			115-2DV4N2			115-2DV4N3			Average Emission		
			ppmVd	lb/MSF		ppmVd	lb/MSF		ppmVd	lb/MSF		ppmVd	lb/MSF
acetaldehyde	(H)	ND	4.5E-01	4.6E-03	ND	4.8E-01	5.1E-03	ND	4.8E-01	4.9E-03	ND	4.7E-01	4.9E-03
acetone	(N)	IM	4.5E-01	6.0E-03	IM	4.6E-01	6.4E-03	IM	5.8E-01	7.9E-03		4.9E-01	6.8E-03
acrolein	(H)	ND	3.2E-01	4.1E-03	ND	3.4E-01	4.6E-03	ND	3.3E-01	4.4E-03	ND	3.3E-01	4.4E-03
benzene	(H)	ND	9.2E-02	1.7E-03	ND	9.4E-02	1.8E-03	ND	9.0E-02	1.7E-03	ND	9.2E-02	1.7E-03
bromomethane	(H)	ND	9.2E-02	2.0E-03	ND	9.4E-02	2.1E-03	ND	9.0E-02	2.0E-03	ND	9.2E-02	2.1E-03
camphene		ND	1.8E+00	5.8E-02	ND	1.9E+00	6.2E-02	ND	1.8E+00	5.8E-02	ND	1.8E+00	5.9E-02
3-carene		ND	1.8E+00	5.8E-02	ND	1.9E+00	6.2E-02	ND	1.8E+00	5.8E-02	ND	1.8E+00	5.9E-02
chloroethane	(H)	ND	9.2E-02	1.4E-03	ND	9.4E-02	1.5E-03	ND	9.0E-02	1.4E-03	ND	9.2E-02	1.4E-03
chloroethene	(H)	ND	9.2E-02	1.3E-03	ND	9.4E-02	1.4E-03	ND	9.0E-02	1.3E-03	ND	9.2E-02	1.4E-03
cumene	(H)	ND	1.8E+00	5.1E-02	ND	1.9E+00	5.4E-02	ND	1.8E+00	5.1E-02	ND	1.8E+00	5.2E-02
p-cymene		ND	1.8E+00	5.7E-02	ND	1.9E+00	6.1E-02	ND	1.8E+00	5.7E-02	ND	1.8E+00	5.8E-02
1,2-dichloroethane	(H)	ND	9.2E-02	2.1E-03	ND	9.4E-02	2.2E-03	ND	9.0E-02	2.1E-03	ND	9.2E-02	2.1E-03
cis-1,2-dichloroethylene		ND	9.2E-02	2.1E-03	ND	9.4E-02	2.2E-03	ND	9.0E-02	2.1E-03	ND	9.2E-02	2.1E-03
formaldehyde	(H)	ND	1.8E-01	1.2E-03	ND	1.9E-01	1.4E-03	ND	1.9E-01	1.3E-03	ND	1.8E-01	1.3E-03
limonene		ND	1.8E+00	5.8E-02	ND	1.9E+00	6.2E-02	ND	1.8E+00	5.8E-02	ND	1.8E+00	5.9E-02
p-mentha-1,5-diene		ND	1.8E+00	5.8E-02	ND	1.9E+00	6.2E-02	ND	1.8E+00	5.8E-02	ND	1.8E+00	5.9E-02
methanol	(H)	ND	5.9E-01	4.3E-03	ND	6.3E-01	4.8E-03	ND	6.2E-01	4.7E-03	ND	6.1E-01	4.6E-03
methyl ethyl ketone (MEK)	(H)	ND	3.1E-01	5.2E-03	ND	3.3E-01	5.7E-03	ND	3.3E-01	5.5E-03	ND	3.2E-01	5.5E-03
methyl isobutyl ketone	(H)	ND	2.2E-01	5.1E-03	ND	2.3E-01	5.5E-03	ND	2.3E-01	5.3E-03	ND	2.2E-01	5.3E-03
methylene chloride	(H)	ND	9.2E-02	1.8E-03	ND	9.4E-02	1.9E-03	ND	9.0E-02	1.8E-03	ND	9.2E-02	1.8E-03
phenol	(H)	ND	3.8E-01	8.3E-03	BP	4.1E-01	9.2E-03	ND	4.0E-01	8.9E-03		1.4E-01	3.1E-03
alpha-pinene		ND	1.8E+00	5.8E-02	ND	1.9E+00	6.2E-02	ND	1.8E+00	5.8E-02	ND	1.8E+00	5.9E-02
beta-pinene		ND	1.8E+00	5.8E-02	ND	1.9E+00	6.2E-02	ND	1.8E+00	5.8E-02	ND	1.8E+00	5.9E-02
propionaldehyde	(H)	ND	3.5E-01	4.7E-03	ND	3.7E-01	5.1E-03	ND	3.6E-01	5.0E-03	ND	3.6E-01	4.9E-03
styrene	(H)	ND	9.2E-02	2.2E-03	ND	9.4E-02	2.4E-03	ND	9.0E-02	2.2E-03	ND	9.2E-02	2.3E-03
toluene	(H)	ND	9.2E-02	2.0E-03	ND	9.4E-02	2.1E-03	ND	9.0E-02	2.0E-03	ND	9.2E-02	2.0E-03
1,2,4-trichlorobenzene	(H)	ND	9.2E-02	3.8E-03	ND	9.4E-02	4.1E-03	ND	9.0E-02	3.9E-03	ND	9.2E-02	3.9E-03
m,p-xylene	(H)	ND	9.2E-02	2.3E-03	ND	9.4E-02	2.4E-03	ND	9.0E-02	2.3E-03	ND	9.2E-02	2.3E-03
o-xylene	(H)	ND	9.2E-02	2.3E-03	ND	9.4E-02	2.4E-03	ND	9.0E-02	2.3E-03	ND	9.2E-02	2.3E-03
THC as Carbon		NA			NA			NA					
Total HAPs				0.0E+00			9.2E-03			0.0E+00			3.1E-03
Total Terpenes				0.0E+00			0.0E+00			0.0E+00			0.0E+00
Production Rate (MSF 3/8 /hr)				7.5			7.2			7.2			7.3
Vol. Flow Rate (DSCFM)				1.1E+04			1.1E+04			1.1E+04			1.1E+04
Source Moisture (%)				1.3			1.2			1.3			1.3
Source Temp (°C)				45.6			45.4			41.2			44.1

ND x.xxEx = Below detection limit of x.xxEx; BP = Below practical quantitation limit; IM = Below detection limit in impinger sample; NA = Not analyzed by this method; H = CAA HAP; N = Not a HAP or VOC as defined by US EPA; TM = Start and end times for THC and speciated compounds differ; QA = Failed quality assurance; MSF = 1000 square feet; ODTH = Oven Dried Tons per Hour; AI = Analytical Interference; MLF = 1000 Linear Feet; MCF = 1000 Cubic Feet

12/9/99
9:09 AM

Table B20. Summary of Emission Test Results
Softwood Veneer Dryer, Dryer No. 2, Veneer Cooling Section Exhaust No. 1 (115-2DV3)

Analyte		115-2DV3N1			115-2DV3N2			115-2DV3N3			Average Emission		
			ppmVd	lb/MSF		ppmVd	lb/MSF		ppmVd	lb/MSF		ppmVd	lb/MSF
acetaldehyde	(H)	ND	4.4E-01	5.0E-03	ND	5.0E-01	5.7E-03	ND	5.0E-01	5.0E-03	ND	4.8E-01	5.2E-03
acetone	(N)	IM	7.8E-01	1.2E-02	IM	4.5E-01	6.7E-03	IM	4.2E-01	5.6E-03		5.5E-01	8.0E-03
acrolein	(H)	ND	3.1E-01	4.5E-03	ND	3.5E-01	5.0E-03	ND	3.5E-01	4.4E-03	ND	3.3E-01	4.6E-03
benzene	(H)	ND	9.2E-02	1.9E-03	ND	8.7E-02	1.7E-03	ND	9.3E-02	1.7E-03	ND	9.1E-02	1.8E-03
bromomethane	(H)	ND	9.2E-02	2.3E-03	ND	8.7E-02	2.1E-03	ND	9.3E-02	2.0E-03	ND	9.1E-02	2.1E-03
camphene		ND	1.8E+00	6.5E-02	ND	1.7E+00	6.1E-02	ND	1.9E+00	5.8E-02	ND	1.8E+00	6.1E-02
3-carene		ND	1.8E+00	6.5E-02	ND	1.7E+00	6.1E-02	ND	1.9E+00	5.8E-02	ND	1.8E+00	6.1E-02
chloroethane	(H)	ND	9.2E-02	1.5E-03	ND	8.7E-02	1.4E-03	ND	9.3E-02	1.4E-03	ND	9.1E-02	1.5E-03
chloroethene	(H)	ND	9.2E-02	1.5E-03	ND	8.7E-02	1.4E-03	ND	9.3E-02	1.3E-03	ND	9.1E-02	1.4E-03
cumene	(H)	ND	1.8E+00	5.7E-02	ND	1.7E+00	5.4E-02	ND	1.9E+00	5.1E-02	ND	1.8E+00	5.4E-02
p-cymene		ND	1.8E+00	6.4E-02	ND	1.7E+00	6.0E-02	ND	1.9E+00	5.7E-02	ND	1.8E+00	6.0E-02
1,2-dichloroethane	(H)	ND	9.2E-02	2.4E-03	ND	8.7E-02	2.2E-03	ND	9.3E-02	2.1E-03	ND	9.1E-02	2.2E-03
cis-1,2-dichloroethylene		ND	9.2E-02	2.3E-03	ND	8.7E-02	2.2E-03	ND	9.3E-02	2.1E-03	ND	9.1E-02	2.2E-03
formaldehyde	(H)	ND	1.7E-01	1.3E-03	ND	2.0E-01	1.6E-03	ND	2.0E-01	1.4E-03	ND	1.9E-01	1.4E-03
limonene		ND	1.8E+00	6.5E-02	ND	1.7E+00	6.1E-02	ND	1.9E+00	5.8E-02	ND	1.8E+00	6.1E-02
p-mentha-1,5-diene		ND	1.8E+00	6.5E-02	ND	1.7E+00	6.1E-02	ND	1.9E+00	5.8E-02	ND	1.8E+00	6.1E-02
methanol	(H)	ND	5.7E-01	4.7E-03	ND	6.6E-01	5.4E-03	ND	6.5E-01	4.7E-03	ND	6.3E-01	5.0E-03
methyl ethyl ketone (MEK)	(H)	ND	3.0E-01	5.7E-03	ND	3.4E-01	6.3E-03	ND	3.4E-01	5.6E-03	ND	3.3E-01	5.9E-03
methyl isobutyl ketone	(H)	ND	2.1E-01	5.6E-03	ND	2.3E-01	6.0E-03	ND	2.4E-01	5.4E-03	ND	2.3E-01	5.6E-03
methylene chloride	(H)	ND	9.2E-02	2.0E-03	ND	8.7E-02	1.9E-03	ND	9.3E-02	1.8E-03	ND	9.1E-02	1.9E-03
phenol	(H)	ND	3.7E-01	9.1E-03	ND	4.2E-01	1.0E-02	ND	4.2E-01	9.0E-03	ND	4.1E-01	9.5E-03
alpha-pinene		ND	1.8E+00	6.5E-02	ND	1.7E+00	6.1E-02	ND	1.9E+00	5.8E-02	ND	1.8E+00	6.1E-02
beta-pinene		ND	1.8E+00	6.5E-02	ND	1.7E+00	6.1E-02	ND	1.9E+00	5.8E-02	ND	1.8E+00	6.1E-02
propionaldehyde	(H)	ND	3.4E-01	5.1E-03	ND	3.8E-01	5.7E-03	ND	3.8E-01	5.0E-03	ND	3.7E-01	5.3E-03
styrene	(H)	ND	9.2E-02	2.5E-03	ND	8.7E-02	2.3E-03	ND	9.3E-02	2.2E-03	ND	9.1E-02	2.3E-03
toluene	(H)	ND	9.2E-02	2.2E-03	ND	8.7E-02	2.1E-03	ND	9.3E-02	2.0E-03	ND	9.1E-02	2.1E-03
1,2,4-trichlorobenzene	(H)	ND	9.2E-02	4.3E-03	ND	8.7E-02	4.0E-03	ND	9.3E-02	3.9E-03	ND	9.1E-02	4.1E-03
m,p-xylene	(H)	ND	9.2E-02	2.5E-03	ND	8.7E-02	2.4E-03	ND	9.3E-02	2.3E-03	ND	9.1E-02	2.4E-03
o-xylene	(H)	ND	9.2E-02	2.5E-03	ND	8.7E-02	2.4E-03	ND	9.3E-02	2.3E-03	ND	9.1E-02	2.4E-03
THC as Carbon			6.1E+00	1.9E-02		2.8E+00	8.4E-03		1.2E+00	3.3E-03		3.4E+00	1.0E-02
Total HAPs				0.0E+00			0.0E+00			0.0E+00			0.0E+00
Total Terpenes				0.0E+00			0.0E+00			0.0E+00			0.0E+00
Production Rate (MSF 3/8 /hr)				7.1			7.1			8.2			7.5
Vol. Flow Rate (DSCFM)				1.2E+04			1.2E+04			1.2E+04			1.2E+04
Source Moisture (%)				1.6			1.9			1.6			1.7
Source Temp (°C)				34.4			35.3			33.9			34.6

ND x.xxEx = Below detection limit of x.xxEx; BP = Below practical quantitation limit; IM = Below detection limit in impinger sample; NA = Not analyzed by this method; H = CAA HAP; N = Not a HAP or VOC as defined by US EPA; TM = Start and end times for THC and speciated compounds differ; QA = Failed quality assurance; MSF = 1000 square feet; ODTH = Oven Dried Tons per Hour; AI = Analytical Interference; MLF = 1000 Linear Feet; MCF = 1000 Cubic Feet

Table B21. Summary of Emission Test Results
Softwood Veneer Dryer, Dryer No. 3, Veneer Cooling SectionExhaust No. 2 (115-3DV4)

Analyte		115-3DV4N1			115-3DV4N2			115-3DV4N3			Average Emission		
			ppmVd	lb/MSF		ppmVd	lb/MSF		ppmVd	lb/MSF		ppmVd	lb/MSF
acetaldehyde	(H)	ND	4.7E-01	1.1E-03	ND	4.9E-01	1.3E-03	ND	4.8E-01	1.4E-03	ND	4.8E-01	1.3E-03
acetone	(N)	IM	4.9E-01	1.5E-03	IM	5.5E-01	2.0E-03	IM	4.4E-01	1.7E-03		4.9E-01	1.7E-03
acrolein	(H)	ND	3.2E-01	9.8E-04	ND	3.4E-01	1.2E-03	ND	3.4E-01	1.2E-03	ND	3.3E-01	1.1E-03
benzene	(H)	ND	8.5E-02	3.6E-04	ND	9.3E-02	4.4E-04	ND	8.9E-02	4.6E-04	ND	8.9E-02	4.2E-04
bromomethane	(H)	ND	8.5E-02	4.3E-04	ND	9.3E-02	5.3E-04	ND	8.9E-02	5.6E-04	ND	8.9E-02	5.1E-04
camphene		ND	1.7E+00	1.2E-02	ND	1.9E+00	1.5E-02	ND	1.8E+00	1.6E-02	ND	1.8E+00	1.5E-02
3-carene		ND	1.7E+00	1.2E-02	ND	1.9E+00	1.5E-02	ND	1.8E+00	1.6E-02	ND	1.8E+00	1.5E-02
chloroethane	(H)	ND	8.5E-02	2.9E-04	ND	9.3E-02	3.6E-04	ND	8.9E-02	3.8E-04	ND	8.9E-02	3.5E-04
chloroethene	(H)	ND	8.5E-02	2.9E-04	ND	9.3E-02	3.5E-04	ND	8.9E-02	3.7E-04	ND	8.9E-02	3.3E-04
cumene	(H)	ND	1.7E+00	1.1E-02	ND	1.9E+00	1.4E-02	ND	1.8E+00	1.4E-02	ND	1.8E+00	1.3E-02
p-cymene		ND	1.7E+00	1.2E-02	ND	1.9E+00	1.5E-02	ND	1.8E+00	1.6E-02	ND	1.8E+00	1.4E-02
1,2-dichloroethane	(H)	ND	8.5E-02	4.5E-04	ND	9.3E-02	5.6E-04	ND	8.9E-02	5.8E-04	ND	8.9E-02	5.3E-04
cis-1,2-dichloroethylene		ND	8.5E-02	4.4E-04	ND	9.3E-02	5.5E-04	ND	8.9E-02	5.7E-04	ND	8.9E-02	5.2E-04
formaldehyde	(H)	ND	1.9E-01	3.0E-04	ND	1.9E-01	3.6E-04	ND	1.9E-01	3.8E-04	ND	1.9E-01	3.5E-04
limonene		ND	1.7E+00	1.2E-02	ND	1.9E+00	1.5E-02	ND	1.8E+00	1.6E-02	ND	1.8E+00	1.5E-02
p-mentha-1,5-diene		ND	1.7E+00	1.2E-02	ND	1.9E+00	1.5E-02	ND	1.8E+00	1.6E-02	ND	1.8E+00	1.5E-02
methanol	(H)	IM	6.3E-01	1.1E-03	ND	6.4E-01	1.2E-03	BP	6.5E-01	1.4E-03		4.3E-01	8.2E-04
methyl ethyl ketone (MEK)	(H)	ND	3.2E-01	1.2E-03	ND	3.4E-01	1.5E-03	ND	3.3E-01	1.6E-03	ND	3.3E-01	1.4E-03
methyl isobutyl ketone	(H)	ND	2.2E-01	1.2E-03	ND	2.3E-01	1.4E-03	ND	2.3E-01	1.5E-03	ND	2.3E-01	1.4E-03
methylene chloride	(H)	ND	8.5E-02	3.9E-04	ND	9.3E-02	4.8E-04	ND	8.9E-02	5.0E-04	ND	8.9E-02	4.5E-04
phenol	(H)	ND	3.9E-01	2.0E-03	ND	4.2E-01	2.4E-03	ND	4.1E-01	2.5E-03	ND	4.1E-01	2.3E-03
alpha-pinene		ND	1.7E+00	1.2E-02	ND	1.9E+00	1.5E-02	ND	1.8E+00	1.6E-02	ND	1.8E+00	1.5E-02
beta-pinene		ND	1.7E+00	1.2E-02	ND	1.9E+00	1.5E-02	ND	1.8E+00	1.6E-02	ND	1.8E+00	1.5E-02
propionaldehyde	(H)	ND	3.6E-01	1.1E-03	ND	3.7E-01	1.3E-03	ND	3.7E-01	1.4E-03	ND	3.7E-01	1.3E-03
styrene	(H)	ND	8.5E-02	4.8E-04	ND	9.3E-02	5.9E-04	ND	8.9E-02	6.1E-04	ND	8.9E-02	5.6E-04
toluene	(H)	ND	8.5E-02	4.2E-04	ND	9.3E-02	5.2E-04	ND	8.9E-02	5.4E-04	ND	8.9E-02	4.9E-04
1,2,4-trichlorobenzene	(H)	ND	8.5E-02	8.3E-04	ND	9.3E-02	1.0E-03	ND	8.9E-02	1.1E-03	ND	8.9E-02	9.7E-04
m,p-xylene	(H)	ND	8.5E-02	4.9E-04	ND	9.3E-02	6.0E-04	ND	8.9E-02	6.2E-04	ND	8.9E-02	5.7E-04
o-xylene	(H)	ND	8.5E-02	4.9E-04	ND	9.3E-02	6.0E-04	ND	8.9E-02	6.2E-04	ND	8.9E-02	5.7E-04
THC as Carbon		NA			NA			NA					
Total HAPs				1.1E-03			0.0E+00			1.4E-03			8.2E-04
Total Terpenes				0.0E+00			0.0E+00			0.0E+00			0.0E+00
Production Rate (MSF 3/8 /hr)				3.8			3.6			3.6			3.7
Vol. Flow Rate (DSCFM)				1.3E+03			1.4E+03			1.5E+03			1.4E+03
Source Moisture (%)				1.2			1.2			1.2			1.2
Source Temp (°C)				40.6			41.7			42.1			41.4

ND x.xxEx = Below detection limit of x.xxEx; BP = Below practical quantitation limit; IM = Below detection limit in impinger sample; NA = Not analyzed by this method; H = CAA HAP; N = Not a HAP or VOC as defined by US EPA; TM = Start and end times for THC and speciated compounds differ; QA = Failed quality assurance; MSF = 1000 square feet; ODTH = Oven Dried Tons per Hour; AI = Analytical Interference; MLF = 1000 Linear Feet; MCF = 1000 Cubic Feet

12/9/99
9:10 AM

Table B22. Summary of Emission Test Results
Softwood Veneer Dryer, Dryer No. 3, Veneer Cooling Section Exhaust No. 1 (115-3DV3)

Analyte		115-3DV3N1			115-3DV3N2			115-3DV3N3			Average Emission		
			ppmVd	lb/MSF		ppmVd	lb/MSF		ppmVd	lb/MSF		ppmVd	lb/MSF
acetaldehyde	(H)	ND	4.4E-01	1.9E-03	ND	4.9E-01	2.2E-03	ND	5.0E-01	2.3E-03	ND	4.8E-01	2.1E-03
acetone	(N)	IM	9.6E-01	5.4E-03	IM	4.6E-01	2.7E-03	IM	5.8E-01	3.5E-03		6.7E-01	3.9E-03
acrolein	(H)	ND	3.1E-01	1.7E-03	ND	3.4E-01	1.9E-03	ND	3.5E-01	2.1E-03	ND	3.3E-01	1.9E-03
benzene	(H)	ND	8.3E-02	6.3E-04	ND	8.9E-02	7.0E-04	ND	1.0E-01	8.2E-04	ND	9.1E-02	7.2E-04
bromomethane	(H)	ND	8.3E-02	7.6E-04	ND	8.9E-02	8.6E-04	ND	1.0E-01	1.0E-03	ND	9.1E-02	8.7E-04
camphene		ND	1.7E+00	2.2E-02	ND	1.8E+00	2.5E-02	ND	2.0E+00	2.9E-02	ND	1.8E+00	2.5E-02
3-carene		ND	1.7E+00	2.2E-02	ND	1.8E+00	2.5E-02	ND	2.0E+00	2.9E-02	ND	1.8E+00	2.5E-02
chloroethane	(H)	ND	8.3E-02	5.2E-04	ND	8.9E-02	5.8E-04	ND	1.0E-01	6.8E-04	ND	9.1E-02	5.9E-04
chloroethene	(H)	ND	8.3E-02	5.0E-04	ND	8.9E-02	5.6E-04	ND	1.0E-01	6.6E-04	ND	9.1E-02	5.7E-04
cumene	(H)	ND	1.7E+00	1.9E-02	ND	1.8E+00	2.2E-02	ND	2.0E+00	2.5E-02	ND	1.8E+00	2.2E-02
p-cymene		ND	1.7E+00	2.2E-02	ND	1.8E+00	2.4E-02	ND	2.0E+00	2.8E-02	ND	1.8E+00	2.5E-02
1,2-dichloroethane	(H)	ND	8.3E-02	8.0E-04	ND	8.9E-02	8.9E-04	ND	1.0E-01	1.0E-03	ND	9.1E-02	9.1E-04
cis-1,2-dichloroethylene		ND	8.3E-02	7.8E-04	ND	8.9E-02	8.7E-04	ND	1.0E-01	1.0E-03	ND	9.1E-02	8.9E-04
formaldehyde	(H)	ND	1.8E-01	5.1E-04	ND	2.0E-01	6.0E-04	ND	1.9E-01	6.2E-04	ND	1.9E-01	5.8E-04
limonene		ND	1.7E+00	2.2E-02	ND	1.8E+00	2.5E-02	ND	2.0E+00	2.9E-02	ND	1.8E+00	2.5E-02
p-mentha-1,5-diene		ND	1.7E+00	2.2E-02	ND	1.8E+00	2.5E-02	ND	2.0E+00	2.9E-02	ND	1.8E+00	2.5E-02
methanol	(H)	BP	6.3E-01	1.9E-03	ND	6.5E-01	2.1E-03	ND	6.5E-01	2.2E-03		2.1E-01	6.5E-04
methyl ethyl ketone (MEK)	(H)	ND	8.3E-02	5.8E-04	ND	3.4E-01	2.4E-03	ND	3.4E-01	2.6E-03	ND	2.5E-01	1.9E-03
methyl isobutyl ketone	(H)	ND	2.1E-01	2.0E-03	ND	2.3E-01	2.3E-03	ND	2.4E-01	2.5E-03	ND	2.3E-01	2.3E-03
methylene chloride	(H)	ND	8.3E-02	6.8E-04	ND	8.9E-02	7.6E-04	ND	1.0E-01	8.9E-04	ND	9.1E-02	7.8E-04
phenol	(H)	ND	3.8E-01	3.4E-03	ND	4.2E-01	4.0E-03	ND	4.2E-01	4.2E-03	ND	4.1E-01	3.9E-03
alpha-pinene		ND	1.7E+00	2.2E-02	ND	1.8E+00	2.5E-02	ND	2.0E+00	2.9E-02	ND	1.8E+00	2.5E-02
beta-pinene		ND	1.7E+00	2.2E-02	ND	1.8E+00	2.5E-02	ND	2.0E+00	2.9E-02	ND	1.8E+00	2.5E-02
propionaldehyde	(H)	ND	3.4E-01	1.9E-03	ND	3.8E-01	2.2E-03	ND	3.8E-01	2.3E-03	ND	3.7E-01	2.1E-03
styrene	(H)	ND	8.3E-02	8.4E-04	ND	8.9E-02	9.4E-04	ND	1.0E-01	1.1E-03	ND	9.1E-02	9.6E-04
toluene	(H)	ND	8.3E-02	7.4E-04	ND	8.9E-02	8.3E-04	ND	1.0E-01	9.7E-04	ND	9.1E-02	8.5E-04
1,2,4-trichlorobenzene	(H)	ND	8.3E-02	1.5E-03	ND	8.9E-02	1.6E-03	ND	1.0E-01	1.9E-03	ND	9.1E-02	1.7E-03
m,p-xylene	(H)	ND	8.3E-02	8.5E-04	ND	8.9E-02	9.6E-04	ND	1.0E-01	1.1E-03	ND	9.1E-02	9.7E-04
o-xylene	(H)	ND	8.3E-02	8.5E-04	ND	8.9E-02	9.6E-04	ND	1.0E-01	1.1E-03	ND	9.1E-02	9.7E-04
THC as Carbon		NA			NA			NA					
Total HAPs				1.9E-03			0.0E+00			0.0E+00			6.5E-04
Total Terpenes				0.0E+00			0.0E+00			0.0E+00			0.0E+00
Production Rate (MSF 3/8 /hr)				3.7			3.7			3.7			3.7
Vol. Flow Rate (DSCFM)				2.3E+03			2.4E+03			2.5E+03			2.4E+03
Source Moisture (%)				1.9			1.6			1.3			1.6
Source Temp (°C)				41.9			40.7			39.6			40.7

ND x.xxEx = Below detection limit of x.xxEx; BP = Below practical quantitation limit; IM = Below detection limit in impinger sample; NA = Not analyzed by this method; H = CAA HAP; N = Not a HAP or VOC as defined by US EPA; TM = Start and end times for THC and speciated compounds differ; QA = Failed quality assurance; MSF = 1000 square feet; ODTH = Oven Dried Tons per Hour; AI = Analytical Interference; MLF = 1000 Linear Feet; MCF = 1000 Cubic Feet

Table B23. Summary of Emission Test Results
Softwood Plywood Hot Presses, Powered Vent Above No. 1 Press (115-1PB1)

Analyte		115-1PB1N1			115-1PB1N2			115-1PB1N3			Average Emission		
			ppmVd	lb/MSF		ppmVd	lb/MSF		ppmVd	lb/MSF		ppmVd	lb/MSF
acetaldehyde	(H)	ND	4.9E-01	4.3E-03	ND	5.1E-01	5.3E-03	ND	5.2E-01	5.3E-03	ND	5.1E-01	5.0E-03
acetone	(N)	IM	4.4E-01	5.2E-03	IM	4.7E-01	6.3E-03	IM	5.8E-01	7.9E-03		5.0E-01	6.4E-03
acrolein	(H)	ND	3.4E-01	3.8E-03	ND	3.6E-01	4.6E-03	ND	3.6E-01	4.7E-03	ND	3.5E-01	4.4E-03
benzene	(H)	ND	8.9E-02	1.4E-03	ND	8.8E-02	1.6E-03	ND	8.8E-02	1.6E-03	ND	8.8E-02	1.5E-03
bromomethane	(H)	ND	8.9E-02	1.7E-03	ND	8.8E-02	1.9E-03	ND	8.8E-02	1.9E-03	ND	8.8E-02	1.9E-03
camphene		ND	1.8E+00	4.8E-02	ND	1.8E+00	5.6E-02	ND	1.8E+00	5.6E-02	ND	1.8E+00	5.3E-02
3-carene		ND	1.8E+00	4.8E-02	ND	1.8E+00	5.6E-02	ND	1.8E+00	5.6E-02	ND	1.8E+00	5.3E-02
chloroethane	(H)	ND	8.9E-02	1.1E-03	ND	8.8E-02	1.3E-03	ND	8.8E-02	1.3E-03	ND	8.8E-02	1.3E-03
chloroethene	(H)	ND	8.9E-02	1.1E-03	ND	8.8E-02	1.3E-03	ND	8.8E-02	1.3E-03	ND	8.8E-02	1.2E-03
cumene	(H)	ND	1.8E+00	4.3E-02	ND	1.8E+00	4.9E-02	ND	1.8E+00	4.9E-02	ND	1.8E+00	4.7E-02
p-cymene		ND	1.8E+00	4.8E-02	ND	1.8E+00	5.5E-02	ND	1.8E+00	5.5E-02	ND	1.8E+00	5.3E-02
1,2-dichloroethane	(H)	ND	8.9E-02	1.8E-03	ND	8.8E-02	2.0E-03	ND	8.8E-02	2.0E-03	ND	8.8E-02	1.9E-03
cis-1,2-dichloroethylene		ND	8.9E-02	1.7E-03	ND	8.8E-02	2.0E-03	ND	8.8E-02	2.0E-03	ND	8.8E-02	1.9E-03
formaldehyde	(H)	ND	1.9E-01	1.2E-03	ND	2.1E-01	1.5E-03	ND	2.1E-01	1.5E-03	ND	2.0E-01	1.4E-03
limonene		ND	1.8E+00	4.8E-02	ND	1.8E+00	5.6E-02	ND	1.8E+00	5.6E-02	ND	1.8E+00	5.3E-02
p-mentha-1,5-diene		ND	1.8E+00	4.8E-02	ND	1.8E+00	5.6E-02	ND	1.8E+00	5.6E-02	ND	1.8E+00	5.3E-02
methanol	(H)		7.0E+00	4.5E-02		7.1E+00	5.3E-02		8.2E+00	6.1E-02		7.5E+00	5.3E-02
methyl ethyl ketone (MEK)	(H)	ND	3.3E-01	4.8E-03	ND	3.5E-01	5.8E-03	ND	3.5E-01	5.9E-03	ND	3.4E-01	5.5E-03
methyl isobutyl ketone	(H)	ND	2.3E-01	4.6E-03	ND	2.4E-01	5.5E-03	ND	2.4E-01	5.6E-03	ND	2.4E-01	5.2E-03
methylene chloride	(H)	ND	8.9E-02	1.5E-03	ND	8.8E-02	1.7E-03	ND	8.8E-02	1.7E-03	ND	8.8E-02	1.7E-03
phenol	(H)	ND	4.1E-01	7.7E-03	ND	4.3E-01	9.5E-03	ND	4.4E-01	9.6E-03	ND	4.3E-01	8.9E-03
alpha-pinene		ND	1.8E+00	4.8E-02	ND	1.8E+00	5.6E-02	ND	1.8E+00	5.6E-02	ND	1.8E+00	5.3E-02
beta-pinene		ND	1.8E+00	4.8E-02	ND	1.8E+00	5.6E-02	ND	1.8E+00	5.6E-02	ND	1.8E+00	5.3E-02
propionaldehyde	(H)	ND	3.7E-01	4.3E-03	ND	3.9E-01	5.3E-03	ND	3.9E-01	5.3E-03	ND	3.8E-01	5.0E-03
styrene	(H)	ND	8.9E-02	1.9E-03	ND	8.8E-02	2.1E-03	ND	8.8E-02	2.1E-03	ND	8.8E-02	2.0E-03
toluene	(H)	ND	8.9E-02	1.6E-03	ND	8.8E-02	1.9E-03	ND	8.8E-02	1.9E-03	ND	8.8E-02	1.8E-03
1,2,4-trichlorobenzene	(H)	ND	8.9E-02	3.2E-03	ND	8.8E-02	3.7E-03	ND	8.8E-02	3.7E-03	ND	8.8E-02	3.5E-03
m,p-xylene	(H)	ND	8.9E-02	1.9E-03	ND	8.8E-02	2.2E-03	ND	8.8E-02	2.2E-03	ND	8.8E-02	2.1E-03
o-xylene	(H)	ND	8.9E-02	1.9E-03	ND	8.8E-02	2.2E-03	ND	8.8E-02	2.2E-03	ND	8.8E-02	2.1E-03
THC as Carbon		NA			NA				1.5E+01	4.2E-02		1.5E+01	4.2E-02
Total HAPs				4.5E-02			5.3E-02			6.1E-02			5.3E-02
Total Terpenes				0.0E+00			0.0E+00			0.0E+00			0.0E+00
Production Rate (MSF 3/8 /hr)				15.7			14.5			14.7			15.0
Vol. Flow Rate (DSCFM)				2.0E+04			2.2E+04			2.2E+04			2.1E+04
Source Moisture (%)				1.8			1.6			1.6			1.6
Source Temp (°C)				38.4			40.3			41.3			40.0

ND x.xxEx = Below detection limit of x.xxEx; BP = Below practical quantitation limit; IM = Below detection limit in impinger sample; NA = Not analyzed by this method; H = CAA HAP; N = Not a HAP or VOC as defined by US EPA; TM = Start and end times for THC and speciated compounds differ; QA = Failed quality assurance; MSF = 1000 square feet; ODTH = Oven Dried Tons per Hour; AI = Analytical Interference; MLF = 1000 Linear Feet; MCF = 1000 Cubic Feet

12/9/99
9:10 AM

Table B24. Summary of Emission Test Results
Softwood Veneer Dryer, WESP Exhaust (115-XDV1)

Analyte		115-XDV1N1			115-XDV1N2			115-XDV1N3			Average Emission		
			ppmVd	lb/MSF		ppmVd	lb/MSF		ppmVd	lb/MSF		ppmVd	lb/MSF
acetaldehyde	(H)		2.5E+00	2.6E-02		4.6E+00	4.2E-02		4.0E+00	3.7E-02		3.7E+00	3.5E-02
acetone	(N)		9.3E-01	1.3E-02		8.6E-01	1.0E-02	BP	7.2E-01	8.9E-03		8.4E-01	1.1E-02
acrolein	(H)	ND	2.8E-01	3.8E-03	ND	2.8E-01	3.3E-03	ND	2.9E-01	3.4E-03	ND	2.8E-01	3.5E-03
benzene	(H)	ND	8.6E-02	1.6E-03	ND	8.7E-02	1.4E-03	ND	8.7E-02	1.4E-03	ND	8.7E-02	1.5E-03
bromomethane	(H)	ND	8.6E-02	1.9E-03	ND	8.7E-02	1.7E-03	ND	8.7E-02	1.8E-03	ND	8.7E-02	1.8E-03
camphene		ND	1.7E+00	5.6E-02	ND	1.7E+00	5.0E-02	ND	1.7E+00	5.0E-02	ND	1.7E+00	5.2E-02
3-carene		ND	1.7E+00	5.6E-02	ND	1.7E+00	5.0E-02	ND	1.7E+00	5.0E-02	ND	1.7E+00	5.2E-02
chloroethane	(H)	ND	8.6E-02	1.3E-03	ND	8.7E-02	1.2E-03	ND	8.7E-02	1.2E-03	ND	8.7E-02	1.2E-03
chloroethene	(H)	ND	8.6E-02	1.3E-03	ND	8.7E-02	1.1E-03	ND	8.7E-02	1.2E-03	ND	8.7E-02	1.2E-03
cumene	(H)	ND	1.7E+00	4.9E-02	ND	1.7E+00	4.4E-02	ND	1.7E+00	4.4E-02	ND	1.7E+00	4.6E-02
p-cymene		ND	1.7E+00	5.5E-02	ND	1.7E+00	4.9E-02	ND	1.7E+00	5.0E-02	ND	1.7E+00	5.1E-02
1,2-dichloroethane	(H)	ND	8.6E-02	2.0E-03	ND	8.7E-02	1.8E-03	ND	8.7E-02	1.8E-03	ND	8.7E-02	1.9E-03
cis-1,2-dichloroethylene		ND	8.6E-02	2.0E-03	ND	8.7E-02	1.8E-03	ND	8.7E-02	1.8E-03	ND	8.7E-02	1.8E-03
formaldehyde	(H)		5.2E+00	3.7E-02		3.3E+00	2.1E-02		3.1E+00	2.0E-02		3.9E+00	2.6E-02
limonene		ND	1.7E+00	5.6E-02	ND	1.7E+00	5.0E-02	ND	1.7E+00	5.0E-02	ND	1.7E+00	5.2E-02
p-mentha-1,5-diene		ND	1.7E+00	5.6E-02	ND	1.7E+00	5.0E-02	ND	1.7E+00	5.0E-02	ND	1.7E+00	5.2E-02
methanol	(H)		1.1E+01	8.4E-02		1.0E+01	6.7E-02		1.3E+01	8.6E-02		1.1E+01	7.9E-02
methyl ethyl ketone (MEK)	(H)	ND	2.8E-01	4.8E-03	ND	2.8E-01	4.2E-03	ND	2.8E-01	4.3E-03	ND	2.8E-01	4.4E-03
methyl isobutyl ketone	(H)	ND	2.0E-01	4.7E-03	BP	2.1E-01	4.3E-03	ND	2.0E-01	4.2E-03		6.9E-02	1.4E-03
methylene chloride	(H)	ND	8.6E-02	1.7E-03	ND	8.7E-02	1.5E-03	ND	8.7E-02	1.6E-03	ND	8.7E-02	1.6E-03
phenol	(H)	ND	3.4E-01	7.7E-03	ND	3.4E-01	6.7E-03	ND	3.4E-01	6.8E-03	ND	3.4E-01	7.1E-03
alpha-pinene		ND	1.7E+00	5.6E-02	ND	1.7E+00	5.0E-02	ND	1.7E+00	5.0E-02	ND	1.7E+00	5.2E-02
beta-pinene		ND	1.7E+00	5.6E-02	ND	1.7E+00	5.0E-02	ND	1.7E+00	5.0E-02	ND	1.7E+00	5.2E-02
propionaldehyde	(H)	ND	3.1E-01	4.3E-03	BP	3.4E-01	4.1E-03	BP	3.4E-01	4.1E-03		2.2E-01	2.7E-03
styrene	(H)	ND	8.6E-02	2.1E-03	ND	8.7E-02	1.9E-03	ND	8.7E-02	1.9E-03	ND	8.7E-02	2.0E-03
toluene	(H)	ND	8.6E-02	1.9E-03	ND	8.7E-02	1.7E-03	ND	8.7E-02	1.7E-03	ND	8.7E-02	1.8E-03
1,2,4-trichlorobenzene	(H)	ND	8.6E-02	3.7E-03	ND	8.7E-02	3.3E-03	ND	8.7E-02	3.3E-03	ND	8.7E-02	3.5E-03
m,p-xylene	(H)	ND	8.6E-02	2.2E-03	ND	8.7E-02	1.9E-03	ND	8.7E-02	2.0E-03	ND	8.7E-02	2.0E-03
o-xylene	(H)	ND	8.6E-02	2.2E-03	ND	8.7E-02	1.9E-03	ND	8.7E-02	2.0E-03	ND	8.7E-02	2.0E-03
THC as Carbon			6.9E+01	2.0E-01		6.8E+01	1.7E-01		6.9E+01	1.8E-01		6.9E+01	1.8E-01
Total HAPs				1.5E-01			1.4E-01			1.5E-01			1.4E-01
Total Terpenes				0.0E+00			0.0E+00			0.0E+00			0.0E+00
Production Rate (MSF 3/8 /hr)				18.6			18.6			16.9			18.0
Vol. Flow Rate (DSCFM)				2.9E+04			2.5E+04			2.3E+04			2.6E+04
Source Moisture (%)				27.0			28.1			28.4			27.8
Source Temp (°C)				66.9			67.9			68.1			67.6

ND x.xxEx = Below detection limit of x.xxEx; BP = Below practical quantitation limit; IM = Below detection limit in impinger sample; NA = Not analyzed by this method; H = CAA HAP; N = Not a HAP or VOC as defined by US EPA; TM = Start and end times for THC and speciated compounds differ; QA = Failed quality assurance; MSF = 1000 square feet; ODTH = Oven Dried Tons per Hour; AI = Analytical Interference; MLF = 1000 Linear Feet; MCF = 1000 Cubic Feet

Table B25. Summary of Emission Test Results
Softwood Veneer Dryer, Combined Veneer Dryer Exhaust at Inlet to EFB (155-XDV2)

Analyte		155-XDV2N1			155-XDV2N2			155-XDV2N3			Average Emission		
			ppmVd	lb/MSF		ppmVd	lb/MSF		ppmVd	lb/MSF		ppmVd	lb/MSF
acetaldehyde	(H)	IM	5.3E-01	2.2E-03	ND	4.7E-01	2.4E-03	ND	4.8E-01	2.4E-03		1.8E-01	7.4E-04
acetone	(N)	BP	9.0E-01	5.0E-03		1.2E+00	8.3E-03		1.5E+00	1.0E-02		1.2E+00	7.8E-03
acrolein	(H)	ND	3.6E-01	1.9E-03	ND	3.2E-01	2.1E-03	ND	3.3E-01	2.1E-03	ND	3.4E-01	2.1E-03
benzene	(H)	ND	8.0E-02	6.0E-04	ND	7.6E-02	6.9E-04	ND	8.1E-02	7.3E-04	ND	7.9E-02	6.7E-04
bromomethane	(H)	ND	8.0E-02	7.2E-04	ND	7.6E-02	8.4E-04	ND	8.1E-02	8.8E-04	ND	7.9E-02	8.2E-04
camphene		ND	1.6E+00	2.1E-02	ND	1.5E+00	2.4E-02	ND	1.6E+00	2.5E-02	ND	1.6E+00	2.3E-02
3-carene		ND	1.6E+00	2.1E-02	ND	1.5E+00	2.4E-02	ND	1.6E+00	2.5E-02	ND	1.6E+00	2.3E-02
chloroethane	(H)	ND	8.0E-02	4.9E-04	ND	7.6E-02	5.7E-04	ND	8.1E-02	6.0E-04	ND	7.9E-02	5.5E-04
chloroethene	(H)	ND	8.0E-02	4.8E-04	ND	7.6E-02	5.5E-04	ND	8.1E-02	5.8E-04	ND	7.9E-02	5.4E-04
cumene	(H)	ND	1.6E+00	1.8E-02	ND	1.5E+00	2.1E-02	ND	1.6E+00	2.2E-02	ND	1.6E+00	2.1E-02
p-cymene		ND	1.6E+00	2.0E-02	ND	1.5E+00	2.4E-02	ND	1.6E+00	2.5E-02	ND	1.6E+00	2.3E-02
1,2-dichloroethane	(H)	ND	8.0E-02	7.6E-04	ND	7.6E-02	8.8E-04	ND	8.1E-02	9.2E-04	ND	7.9E-02	8.5E-04
cis-1,2-dichloroethylene		ND	8.0E-02	7.4E-04	ND	7.6E-02	8.6E-04	ND	8.1E-02	9.0E-04	ND	7.9E-02	8.3E-04
formaldehyde	(H)		2.3E+00	6.4E-03		6.5E-01	2.3E-03		3.9E+00	1.3E-02		2.3E+00	7.3E-03
limonene		ND	1.6E+00	2.1E-02	ND	1.5E+00	2.4E-02	ND	1.6E+00	2.5E-02	ND	1.6E+00	2.3E-02
p-mentha-1,5-diene		ND	1.6E+00	2.1E-02	ND	1.5E+00	2.4E-02	ND	1.6E+00	2.5E-02	ND	1.6E+00	2.3E-02
methanol	(H)		1.5E+01	4.4E-02		1.2E+01	4.4E-02		1.5E+01	5.4E-02		1.4E+01	4.7E-02
methyl ethyl ketone (MEK)	(H)	ND	3.5E-01	2.4E-03	ND	3.2E-01	2.7E-03	ND	3.3E-01	2.7E-03	ND	3.3E-01	2.6E-03
methyl isobutyl ketone	(H)	ND	2.4E-01	2.3E-03	ND	2.1E-01	2.5E-03	ND	2.2E-01	2.5E-03	ND	2.2E-01	2.4E-03
methylene chloride	(H)	ND	8.0E-02	6.5E-04	ND	7.6E-02	7.5E-04	ND	8.1E-02	7.9E-04	ND	7.9E-02	7.3E-04
phenol	(H)	IM	5.0E-01	4.5E-03	ND	3.9E-01	4.4E-03	ND	4.1E-01	4.4E-03		1.7E-01	1.5E-03
alpha-pinene		ND	1.6E+00	2.1E-02	ND	1.5E+00	2.4E-02	ND	1.6E+00	2.5E-02	ND	1.6E+00	2.3E-02
beta-pinene		ND	1.6E+00	2.1E-02	ND	1.5E+00	2.4E-02	ND	1.6E+00	2.5E-02	ND	1.6E+00	2.3E-02
propionaldehyde	(H)	ND	4.0E-01	2.2E-03	ND	3.5E-01	2.4E-03	ND	3.6E-01	2.4E-03	ND	3.7E-01	2.3E-03
styrene	(H)	ND	8.0E-02	7.9E-04	ND	7.6E-02	9.2E-04	ND	8.1E-02	9.7E-04	ND	7.9E-02	9.0E-04
toluene	(H)	ND	8.0E-02	7.0E-04	ND	7.6E-02	8.2E-04	ND	8.1E-02	8.6E-04	ND	7.9E-02	7.9E-04
1,2,4-trichlorobenzene	(H)	ND	8.0E-02	1.4E-03	ND	7.6E-02	1.6E-03	ND	8.1E-02	1.7E-03	ND	7.9E-02	1.6E-03
m,p-xylene	(H)	ND	8.0E-02	8.1E-04	ND	7.6E-02	9.4E-04		9.3E-02	1.1E-03		3.1E-02	3.8E-04
o-xylene	(H)	ND	8.0E-02	8.1E-04	ND	7.6E-02	9.4E-04	ND	8.1E-02	9.9E-04	ND	7.9E-02	9.1E-04
THC as Carbon			8.5E+01	9.7E-02		8.2E+01	1.1E-01		7.5E+01	1.0E-01		8.1E+01	1.0E-01
Total HAPs				5.7E-02			4.6E-02			6.8E-02			5.7E-02
Total Terpenes				0.0E+00			0.0E+00			0.0E+00			0.0E+00
Production Rate (MSF 3/8 /hr)				18.9			15.3			15.7			16.6
Vol. Flow Rate (DSCFM)				1.2E+04			1.2E+04			1.2E+04			1.2E+04
Source Moisture (%)				15.6			15.6			15.6			15.6
Source Temp (°C)				72.2			72.2			72.2			72.2

ND x.xxEx = Below detection limit of x.xxEx; BP = Below practical quantitation limit; IM = Below detection limit in impinger sample; NA = Not analyzed by this method; H = CAA HAP; N = Not a HAP or VOC as defined by US EPA; TM = Start and end times for THC and speciated compounds differ; QA = Failed quality assurance; MSF = 1000 square feet; ODTH = Oven Dried Tons per Hour; AI = Analytical Interference; MLF = 1000 Linear Feet; MCF = 1000 Cubic Feet

12/9/99
9:10 AM

Table B26. Summary of Emission Test Results
Softwood Veneer Dryer, Dryer No. 3 Veneer Cooling Section Vent (155-3DV3)

Analyte		155-3DV3N1			155-3DV3N2			155-3DV3N3			Average Emission		
			ppmVd	lb/MSF		ppmVd	lb/MSF		ppmVd	lb/MSF		ppmVd	lb/MSF
acetaldehyde	(H)	ND	3.7E-01	3.7E-03	ND	3.9E-01	3.9E-03	IM	4.0E-01	4.6E-03		1.3E-01	1.5E-03
acetone	(N)	IM	3.0E-01	3.9E-03	IM	3.4E-01	4.4E-03	IM	3.0E-01	4.6E-03		3.1E-01	4.3E-03
acrolein	(H)	ND	2.6E-01	3.3E-03	ND	2.7E-01	3.5E-03	ND	2.8E-01	4.0E-03	ND	2.7E-01	3.6E-03
benzene	(H)	ND	7.7E-02	1.4E-03	ND	8.0E-02	1.4E-03	ND	8.0E-02	1.6E-03	ND	7.9E-02	1.5E-03
bromomethane	(H)	ND	7.7E-02	1.7E-03	ND	8.0E-02	1.7E-03	ND	8.0E-02	2.0E-03	ND	7.9E-02	1.8E-03
camphene		ND	1.5E+00	4.8E-02	ND	1.6E+00	4.9E-02	ND	1.6E+00	5.7E-02	ND	1.6E+00	5.1E-02
3-carene		ND	1.5E+00	4.8E-02	ND	1.6E+00	4.9E-02	ND	1.6E+00	5.7E-02	ND	1.6E+00	5.1E-02
chloroethane	(H)	ND	7.7E-02	1.1E-03	ND	8.0E-02	1.2E-03	ND	8.0E-02	1.4E-03	ND	7.9E-02	1.2E-03
chloroethene	(H)	ND	7.7E-02	1.1E-03	ND	8.0E-02	1.1E-03	ND	8.0E-02	1.3E-03	ND	7.9E-02	1.2E-03
cumene	(H)	ND	1.5E+00	4.2E-02	ND	1.6E+00	4.3E-02	ND	1.6E+00	5.1E-02	ND	1.6E+00	4.5E-02
p-cymene		ND	1.5E+00	4.7E-02	ND	1.6E+00	4.8E-02	ND	1.6E+00	5.7E-02	ND	1.6E+00	5.1E-02
1,2-dichloroethane	(H)	ND	7.7E-02	1.7E-03	ND	8.0E-02	1.8E-03	ND	8.0E-02	2.1E-03	ND	7.9E-02	1.9E-03
cis-1,2-dichloroethylene		ND	7.7E-02	1.7E-03	ND	8.0E-02	1.7E-03	ND	8.0E-02	2.0E-03	ND	7.9E-02	1.8E-03
formaldehyde	(H)	ND	1.3E-01	8.6E-04	ND	1.3E-01	9.0E-04	ND	1.3E-01	1.0E-03	ND	1.3E-01	9.4E-04
limonene		ND	1.5E+00	4.8E-02	ND	1.6E+00	4.9E-02	ND	1.6E+00	5.7E-02	ND	1.6E+00	5.1E-02
p-mentha-1,5-diene		ND	1.5E+00	4.8E-02	ND	1.6E+00	4.9E-02	ND	1.6E+00	5.7E-02	ND	1.6E+00	5.1E-02
methanol	(H)	ND	4.8E-01	3.5E-03	ND	5.1E-01	3.6E-03	ND	5.1E-01	4.3E-03	ND	5.0E-01	3.8E-03
methyl ethyl ketone (MEK)	(H)	ND	2.6E-01	4.2E-03	ND	2.7E-01	4.4E-03	ND	2.7E-01	5.1E-03	ND	2.7E-01	4.6E-03
methyl isobutyl ketone	(H)	ND	1.8E-01	4.1E-03	ND	1.9E-01	4.3E-03	ND	1.9E-01	5.0E-03	ND	1.9E-01	4.4E-03
methylene chloride	(H)	ND	7.7E-02	1.5E-03	ND	8.0E-02	1.5E-03	ND	8.0E-02	1.8E-03	ND	7.9E-02	1.6E-03
phenol	(H)	ND	3.1E-01	6.8E-03	ND	3.3E-01	7.0E-03	ND	3.3E-01	8.2E-03	ND	3.3E-01	7.3E-03
alpha-pinene		ND	1.5E+00	4.8E-02	ND	1.6E+00	4.9E-02	ND	1.6E+00	5.7E-02	ND	1.6E+00	5.1E-02
beta-pinene		ND	1.5E+00	4.8E-02	ND	1.6E+00	4.9E-02	ND	1.6E+00	5.7E-02	ND	1.6E+00	5.1E-02
propionaldehyde	(H)	ND	2.8E-01	3.8E-03	ND	3.0E-01	3.9E-03	ND	3.0E-01	4.6E-03	ND	2.9E-01	4.1E-03
styrene	(H)	ND	7.7E-02	1.8E-03	ND	8.0E-02	1.9E-03	ND	8.0E-02	2.2E-03	ND	7.9E-02	2.0E-03
toluene	(H)	ND	7.7E-02	1.6E-03	ND	8.0E-02	1.7E-03	ND	8.0E-02	1.9E-03	ND	7.9E-02	1.7E-03
1,2,4-trichlorobenzene	(H)	ND	7.7E-02	3.2E-03	ND	8.0E-02	3.3E-03	ND	8.0E-02	3.8E-03	ND	7.9E-02	3.4E-03
m,p-xylene	(H)	ND	7.7E-02	1.9E-03		1.6E-01	3.9E-03		1.7E-01	4.9E-03		1.1E-01	2.9E-03
o-xylene	(H)	ND	7.7E-02	1.9E-03		1.0E-01	2.4E-03		1.0E-01	2.9E-03		6.8E-02	1.8E-03
THC as Carbon		NA			NA			NA					
Total HAPs				0.0E+00			6.3E-03			1.2E-02			6.2E-03
Total Terpenes				0.0E+00			0.0E+00			0.0E+00			0.0E+00
Production Rate (MSF 3/8 /hr)				6.7			6.7			5.8			6.4
Vol. Flow Rate (DSCFM)				9.8E+03			9.7E+03			9.8E+03			9.7E+03
Source Moisture (%)				1.6			1.6			1.5			1.6
Source Temp (°C)				36.8			30.2			30.2			32.4

ND x.xxEx = Below detection limit of x.xxEx; BP = Below practical quantitation limit; IM = Below detection limit in impinger sample; NA = Not analyzed by this method; H = CAA HAP; N = Not a HAP or VOC as defined by US EPA; TM = Start and end times for THC and speciated compounds differ; QA = Failed quality assurance; MSF = 1000 square feet; ODTH = Oven Dried Tons per Hour; AI = Analytical Interference; MLF = 1000 Linear Feet; MCF = 1000 Cubic Feet

Table B27. Summary of Emission Test Results
Hardwood Plywood Hot Press, Powered Vent Over No. 1 Press (155-1PB1)

Analyte		155-1PB1N1			155-1PB1N2			155-1PB1N3			Average Emission		
			ppmVd	lb/MSF		ppmVd	lb/MSF		ppmVd	lb/MSF		ppmVd	lb/MSF
acetaldehyde	(H)	ND	3.9E-01	1.0E-02	ND	3.8E-01	8.2E-03	ND	3.7E-01	8.0E-03	ND	3.8E-01	8.7E-03
acetone	(N)	BP	5.3E-01	1.8E-02		9.6E-01	2.7E-02		2.0E+00	5.6E-02		1.2E+00	3.4E-02
acrolein	(H)	ND	2.7E-01	8.9E-03	ND	2.7E-01	7.3E-03	ND	2.6E-01	7.2E-03	ND	2.7E-01	7.8E-03
benzene	(H)	ND	7.4E-02	3.4E-03	ND	7.4E-02	2.8E-03	ND	7.8E-02	3.0E-03	ND	7.6E-02	3.1E-03
bromomethane	(H)	ND	7.4E-02	4.2E-03	ND	7.4E-02	3.4E-03	ND	7.8E-02	3.6E-03	ND	7.6E-02	3.7E-03
camphene		ND	1.5E+00	1.2E-01	ND	1.5E+00	9.8E-02	ND	1.6E+00	1.0E-01	ND	1.5E+00	1.1E-01
3-carene		ND	1.5E+00	1.2E-01	ND	1.5E+00	9.8E-02	ND	1.6E+00	1.0E-01	ND	1.5E+00	1.1E-01
chloroethane	(H)	ND	7.4E-02	2.8E-03	ND	7.4E-02	2.3E-03	ND	7.8E-02	2.5E-03	ND	7.6E-02	2.5E-03
chloroethene	(H)	ND	7.4E-02	2.7E-03	ND	7.4E-02	2.2E-03	ND	7.8E-02	2.4E-03	ND	7.6E-02	2.5E-03
cumene	(H)	ND	1.5E+00	1.1E-01	ND	1.5E+00	8.6E-02	ND	1.6E+00	9.2E-02	ND	1.5E+00	9.4E-02
p-cymene		ND	1.5E+00	1.2E-01	ND	1.5E+00	9.6E-02	ND	1.6E+00	1.0E-01	ND	1.5E+00	1.1E-01
1,2-dichloroethane	(H)	ND	7.4E-02	4.3E-03	ND	7.4E-02	3.5E-03	ND	7.8E-02	3.8E-03	ND	7.6E-02	3.9E-03
cis-1,2-dichloroethylene		ND	7.4E-02	4.2E-03	ND	7.4E-02	3.5E-03	ND	7.8E-02	3.7E-03	ND	7.6E-02	3.8E-03
formaldehyde	(H)	BP	1.7E-01	3.0E-03	BP	2.4E-01	3.5E-03	BP	3.4E-01	5.0E-03		2.5E-01	3.8E-03
limonene		ND	1.5E+00	1.2E-01	ND	1.5E+00	9.8E-02	ND	1.6E+00	1.0E-01	ND	1.5E+00	1.1E-01
p-mentha-1,5-diene		ND	1.5E+00	1.2E-01	ND	1.5E+00	9.8E-02	ND	1.6E+00	1.0E-01	ND	1.5E+00	1.1E-01
methanol	(H)	IM	5.4E-01	1.0E-02		2.6E+00	4.1E-02		2.5E+00	3.8E-02		1.9E+00	3.0E-02
methyl ethyl ketone (MEK)	(H)	ND	2.7E-01	1.1E-02	ND	2.6E-01	9.2E-03	ND	2.6E-01	9.1E-03	ND	2.6E-01	9.8E-03
methyl isobutyl ketone	(H)		4.0E-01	2.4E-02	ND	1.8E-01	8.8E-03	ND	1.8E-01	8.9E-03		1.3E-01	7.9E-03
methylene chloride	(H)	ND	7.4E-02	3.7E-03	ND	7.4E-02	3.0E-03	ND	7.8E-02	3.2E-03	ND	7.6E-02	3.3E-03
phenol	(H)	ND	3.3E-01	1.8E-02	ND	3.2E-01	1.5E-02	ND	3.2E-01	1.5E-02	ND	3.2E-01	1.6E-02
alpha-pinene		ND	1.5E+00	1.2E-01	ND	1.5E+00	9.8E-02	ND	1.6E+00	1.0E-01	ND	1.5E+00	1.1E-01
beta-pinene		ND	1.5E+00	1.2E-01	ND	1.5E+00	9.8E-02	ND	1.6E+00	1.0E-01	ND	1.5E+00	1.1E-01
propionaldehyde	(H)	ND	3.0E-01	1.0E-02	ND	2.9E-01	8.2E-03	ND	2.9E-01	8.2E-03	ND	2.9E-01	8.8E-03
styrene	(H)	ND	7.4E-02	4.6E-03	ND	7.4E-02	3.7E-03	ND	7.8E-02	4.0E-03	ND	7.6E-02	4.1E-03
toluene	(H)	ND	7.4E-02	4.0E-03	ND	7.4E-02	3.3E-03	ND	7.8E-02	3.5E-03	ND	7.6E-02	3.6E-03
1,2,4-trichlorobenzene	(H)	ND	7.4E-02	7.9E-03	ND	7.4E-02	6.5E-03	ND	7.8E-02	6.9E-03	ND	7.6E-02	7.1E-03
m,p-xylene	(H)	ND	7.4E-02	4.6E-03	ND	7.4E-02	3.8E-03	ND	7.8E-02	4.1E-03	ND	7.6E-02	4.2E-03
o-xylene	(H)	ND	7.4E-02	4.6E-03	ND	7.4E-02	3.8E-03	ND	7.8E-02	4.1E-03	ND	7.6E-02	4.2E-03
THC as Carbon			4.9E+00	3.4E-02		7.3E+00	4.2E-02		1.2E+01	6.8E-02		7.9E+00	4.8E-02
Total HAPs				3.7E-02			4.4E-02			4.3E-02			4.2E-02
Total Terpenes				0.0E+00			0.0E+00			0.0E+00			0.0E+00
Production Rate (MSF 3/8 /hr)				11.5			13.4			13.4			12.8
Vol. Flow Rate (DSCFM)				4.4E+04			4.2E+04			4.2E+04			4.2E+04
Source Moisture (%)				1.4			1.4			1.4			1.4
Source Temp (°C)				21.6			24.9			26.2			24.2

ND x.xxEx = Below detection limit of x.xxEx; BP = Below practical quantitation limit; IM = Below detection limit in impinger sample; NA = Not analyzed by this method; H = CAA HAP; N = Not a HAP or VOC as defined by US EPA; TM = Start and end times for THC and speciated compounds differ; QA = Failed quality assurance; MSF = 1000 square feet; ODTH = Oven Dried Tons per Hour; AI = Analytical Interference; MLF = 1000 Linear Feet; MCF = 1000 Cubic Feet

12/9/99
9:10 AM

Table B28. Summary of Emission Test Results
Softwood Veneer Dryer, EFB Exhaust (155-XDV1)

Analyte		155-XDV1N1			155-XDV1N2			155-XDV1N3			Average Emission		
			ppmVd	lb/MSF		ppmVd	lb/MSF		ppmVd	lb/MSF		ppmVd	lb/MSF
acetaldehyde	(H)	ND	4.1E-01	1.7E-03	IM	4.1E-01	2.1E-03	ND	4.1E-01	2.1E-03		1.4E-01	7.1E-04
acetone	(N)		9.9E-01	5.5E-03		1.6E+00	1.1E-02		9.8E-01	6.5E-03		1.2E+00	7.6E-03
acrolein	(H)	ND	2.9E-01	1.5E-03	ND	2.8E-01	1.9E-03	ND	2.8E-01	1.8E-03	ND	2.9E-01	1.7E-03
benzene	(H)	ND	8.3E-02	6.2E-04	ND	7.6E-02	7.0E-04	ND	7.7E-02	6.9E-04	ND	7.9E-02	6.7E-04
bromomethane	(H)	ND	8.3E-02	7.5E-04	ND	7.6E-02	8.5E-04	ND	7.7E-02	8.3E-04	ND	7.9E-02	8.1E-04
camphene		ND	1.7E+00	2.1E-02	ND	1.5E+00	2.4E-02	ND	1.5E+00	2.4E-02	ND	1.6E+00	2.3E-02
3-carene		ND	1.7E+00	2.1E-02	ND	1.5E+00	2.4E-02	ND	1.5E+00	2.4E-02	ND	1.6E+00	2.3E-02
chloroethane	(H)	ND	8.3E-02	5.1E-04	ND	7.6E-02	5.8E-04	ND	7.7E-02	5.7E-04	ND	7.9E-02	5.5E-04
chloroethene	(H)	ND	8.3E-02	4.9E-04	ND	7.6E-02	5.6E-04	ND	7.7E-02	5.5E-04	ND	7.9E-02	5.3E-04
cumene	(H)	ND	1.7E+00	1.9E-02	ND	1.5E+00	2.2E-02	ND	1.5E+00	2.1E-02	ND	1.6E+00	2.1E-02
p-cymene		ND	1.7E+00	2.1E-02	ND	1.5E+00	2.4E-02	ND	1.5E+00	2.4E-02	ND	1.6E+00	2.3E-02
1,2-dichloroethane	(H)	ND	8.3E-02	7.8E-04	ND	7.6E-02	8.9E-04	ND	7.7E-02	8.7E-04	ND	7.9E-02	8.5E-04
cis-1,2-dichloroethylene		ND	8.3E-02	7.6E-04	ND	7.6E-02	8.7E-04	ND	7.7E-02	8.5E-04	ND	7.9E-02	8.3E-04
formaldehyde	(H)		2.8E+00	8.0E-03		4.5E+00	1.6E-02		2.6E+00	8.9E-03		3.3E+00	1.1E-02
limonene		ND	1.7E+00	2.1E-02	ND	1.5E+00	2.4E-02	ND	1.5E+00	2.4E-02	ND	1.6E+00	2.3E-02
p-mentha-1,5-diene		ND	1.7E+00	2.1E-02	ND	1.5E+00	2.4E-02	ND	1.5E+00	2.4E-02	ND	1.6E+00	2.3E-02
methanol	(H)		1.3E+01	4.0E-02		1.4E+01	5.4E-02		1.0E+01	3.7E-02		1.3E+01	4.4E-02
methyl ethyl ketone (MEK)	(H)	ND	2.8E-01	1.9E-03	ND	2.8E-01	2.3E-03	ND	2.8E-01	2.3E-03	ND	2.8E-01	2.2E-03
methyl isobutyl ketone	(H)	ND	2.0E-01	1.9E-03	ND	1.9E-01	2.3E-03	ND	1.9E-01	2.2E-03	ND	1.9E-01	2.1E-03
methylene chloride	(H)	ND	8.3E-02	6.7E-04	ND	7.6E-02	7.6E-04	ND	7.7E-02	7.5E-04	ND	7.9E-02	7.3E-04
phenol	(H)	ND	3.5E-01	3.1E-03	ND	3.4E-01	3.8E-03	ND	3.5E-01	3.7E-03	ND	3.5E-01	3.5E-03
alpha-pinene		ND	1.7E+00	2.1E-02	ND	1.5E+00	2.4E-02	ND	1.5E+00	2.4E-02	ND	1.6E+00	2.3E-02
beta-pinene		ND	1.7E+00	2.1E-02	ND	1.5E+00	2.4E-02	ND	1.5E+00	2.4E-02	ND	1.6E+00	2.3E-02
propionaldehyde	(H)	ND	3.2E-01	1.7E-03	ND	3.1E-01	2.1E-03	ND	3.1E-01	2.1E-03	ND	3.1E-01	2.0E-03
styrene	(H)	ND	8.3E-02	8.2E-04	ND	7.6E-02	9.3E-04	ND	7.7E-02	9.2E-04	ND	7.9E-02	8.9E-04
toluene	(H)	ND	8.3E-02	7.3E-04	ND	7.6E-02	8.3E-04	ND	7.7E-02	8.1E-04	ND	7.9E-02	7.9E-04
1,2,4-trichlorobenzene	(H)	ND	8.3E-02	1.4E-03	ND	7.6E-02	1.6E-03	ND	7.7E-02	1.6E-03	ND	7.9E-02	1.5E-03
m,p-xylene	(H)	ND	8.3E-02	8.4E-04		9.0E-02	1.1E-03	ND	7.7E-02	9.3E-04		3.0E-02	3.7E-04
o-xylene	(H)	ND	8.3E-02	8.4E-04	ND	7.6E-02	9.5E-04	ND	7.7E-02	9.3E-04	ND	7.9E-02	9.1E-04
THC as Carbon		TM	7.8E+01	8.9E-02	TM	8.6E+01	1.2E-01		8.0E+01	1.1E-01		8.1E+01	1.1E-01
Total HAPs				4.8E-02			7.2E-02			4.6E-02			5.6E-02
Total Terpenes				0.0E+00			0.0E+00			0.0E+00			0.0E+00
Production Rate (MSF 3/8 /hr)				18.9			15.3			15.7			16.6
Vol. Flow Rate (DSCFM)				1.2E+04			1.2E+04			1.2E+04			1.2E+04
Source Moisture (%)				15.6			15.6			15.6			15.6
Source Temp (°C)				72.2			72.2			72.2			72.2

ND x.xxEx = Below detection limit of x.xxEx; BP = Below practical quantitation limit; IM = Below detection limit in impinger sample; NA = Not analyzed by this method; H = CAA HAP; N = Not a HAP or VOC as defined by US EPA; TM = Start and end times for THC and speciated compounds differ; QA = Failed quality assurance; MSF = 1000 square feet; ODTH = Oven Dried Tons per Hour; AI = Analytical Interference; MLF = 1000 Linear Feet; MCF = 1000 Cubic Feet

Table B29. Summary of Emission Test Results
Softwood Veneer Dryer, Combined Dryer Exhaust at Inlet to RTO (165-XDV2)

Analyte		165-XDV2N1			165-XDV2N2			165-XDV2N3			Average Emission		
			ppmVd	lb/MSF		ppmVd	lb/MSF		ppmVd	lb/MSF		ppmVd	lb/MSF
acetaldehyde	(H)		1.2E+00	8.2E-03		1.2E+00	7.3E-03		1.3E+00	8.4E-03		1.2E+00	8.0E-03
acetone	(N)		8.6E-01	7.8E-03		8.8E-01	7.2E-03		1.1E+00	9.4E-03		9.4E-01	8.1E-03
acrolein	(H)	ND	2.7E-01	2.3E-03	ND	2.7E-01	2.1E-03	AI			ND	2.7E-01	2.2E-03
benzene	(H)	ND	8.0E-02	9.8E-04	ND	7.4E-02	8.0E-04	ND	7.4E-02	8.7E-04	ND	7.6E-02	8.8E-04
bromomethane	(H)	ND	8.0E-02	1.2E-03	ND	7.4E-02	9.8E-04	ND	7.4E-02	1.1E-03	ND	7.6E-02	1.1E-03
camphene		ND	1.6E+00	3.4E-02	ND	1.5E+00	2.8E-02	ND	1.5E+00	3.0E-02	ND	1.5E+00	3.1E-02
3-carene		ND	1.6E+00	3.4E-02	ND	1.5E+00	2.8E-02	ND	1.5E+00	3.0E-02	ND	1.5E+00	3.1E-02
chloroethane	(H)	ND	8.0E-02	8.1E-04	ND	7.4E-02	6.6E-04	ND	7.4E-02	7.2E-04	ND	7.6E-02	7.3E-04
chloroethene	(H)	ND	8.0E-02	7.8E-04	ND	7.4E-02	6.4E-04	ND	7.4E-02	6.9E-04	ND	7.6E-02	7.1E-04
cumene	(H)	ND	1.6E+00	3.0E-02	ND	1.5E+00	2.5E-02	ND	1.5E+00	2.7E-02	ND	1.5E+00	2.7E-02
p-cymene		ND	1.6E+00	3.4E-02	ND	1.5E+00	2.8E-02	ND	1.5E+00	3.0E-02	ND	1.5E+00	3.0E-02
1,2-dichloroethane	(H)	ND	8.0E-02	1.2E-03	ND	7.4E-02	1.0E-03	ND	7.4E-02	1.1E-03	ND	7.6E-02	1.1E-03
cis-1,2-dichloroethylene		ND	8.0E-02	1.2E-03	ND	7.4E-02	1.0E-03	ND	7.4E-02	1.1E-03	ND	7.6E-02	1.1E-03
formaldehyde	(H)		2.8E+00	1.3E-02		3.9E+00	1.7E-02		6.4E+00	2.9E-02		4.4E+00	1.9E-02
limonene			2.8E+00	5.9E-02		2.1E+00	4.0E-02		1.5E+00	3.1E-02		2.1E+00	4.3E-02
p-mentha-1,5-diene		ND	1.6E+00	3.4E-02	ND	1.5E+00	2.8E-02	ND	1.5E+00	3.0E-02	ND	1.5E+00	3.1E-02
methanol	(H)		5.2E+00	2.6E-02		5.9E+00	2.6E-02		5.4E+00	2.6E-02		5.5E+00	2.6E-02
methyl ethyl ketone (MEK)	(H)	ND	2.6E-01	2.9E-03	ND	2.7E-01	2.7E-03	ND	2.4E-01	2.6E-03	ND	2.6E-01	2.7E-03
methyl isobutyl ketone	(H)	ND	1.8E-01	2.9E-03	ND	1.8E-01	2.6E-03	ND	1.7E-01	2.6E-03	ND	1.8E-01	2.7E-03
methylene chloride	(H)	ND	8.0E-02	1.1E-03	ND	7.4E-02	8.7E-04	ND	7.4E-02	9.4E-04	ND	7.6E-02	9.6E-04
phenol	(H)	ND	3.2E-01	4.7E-03	ND	3.3E-01	4.3E-03	IM	3.3E-01	4.7E-03		1.1E-01	1.6E-03
alpha-pinene			8.1E+01	1.7E+00		7.5E+01	1.4E+00		6.0E+01	1.2E+00		7.2E+01	1.5E+00
beta-pinene			2.3E+01	5.0E-01		2.2E+01	4.3E-01		2.2E+01	4.4E-01		2.2E+01	4.5E-01
propionaldehyde	(H)	ND	2.9E-01	2.6E-03	ND	3.0E-01	2.4E-03	ND	2.7E-01	2.3E-03	ND	2.8E-01	2.4E-03
styrene	(H)	ND	8.0E-02	1.3E-03	ND	7.4E-02	1.1E-03	ND	7.4E-02	1.2E-03	ND	7.6E-02	1.2E-03
toluene	(H)	ND	8.0E-02	1.2E-03	ND	7.4E-02	9.5E-04	ND	7.4E-02	1.0E-03	ND	7.6E-02	1.0E-03
1,2,4-trichlorobenzene	(H)	ND	8.0E-02	2.3E-03	ND	7.4E-02	1.9E-03	ND	7.4E-02	2.0E-03	ND	7.6E-02	2.0E-03
m,p-xylene	(H)	ND	8.0E-02	1.3E-03	ND	7.4E-02	1.1E-03	ND	7.4E-02	1.2E-03	ND	7.6E-02	1.2E-03
o-xylene	(H)	ND	8.0E-02	1.3E-03	ND	7.4E-02	1.1E-03	ND	7.4E-02	1.2E-03	ND	7.6E-02	1.2E-03
THC as Carbon			1.6E+03	3.0E+00		1.4E+03	2.4E+00		2.4E+03	4.3E+00		1.8E+03	3.2E+00
Total HAPs				4.8E-02			5.0E-02			6.7E-02			5.5E-02
Total Terpenes				2.3E+00			1.9E+00			1.7E+00			1.9E+00
Production Rate (MSF 3/8 /hr)				46.4			50.9			44.7			47.3
Vol. Flow Rate (DSCFM)				4.6E+04			4.6E+04			4.3E+04			4.5E+04
Source Moisture (%)				28.9			30.3			33.8			31.0
Source Temp (°C)				172.5			172.5			173.1			172.7

ND x.xxEx = Below detection limit of x.xxEx; BP = Below practical quantitation limit; IM = Below detection limit in impinger sample; NA = Not analyzed by this method; H = CAA HAP; N = Not a HAP or VOC as defined by US EPA; TM = Start and end times for THC and speciated compounds differ; QA = Failed quality assurance; MSF = 1000 square feet; ODTH = Oven Dried Tons per Hour; AI = Analytical Interference; MLF = 1000 Linear Feet; MCF = 1000 Cubic Feet

12/9/99
9:10 AM

Table B30. Summary of Emission Test Results
Softwood Veneer Dryer, No. 4 Dryer, Veneer Cooling Section Exhaust No. 1 (165-4DV4)

Analyte		165-4DV4N1			165-4DV4N2			165-4DV4N3			Average Emission		
			ppmVd	lb/MSF		ppmVd	lb/MSF		ppmVd	lb/MSF		ppmVd	lb/MSF
acetaldehyde	(H)	ND	3.9E-01	6.0E-03	ND	4.1E-01	6.6E-03	ND	4.0E-01	7.0E-03	ND	4.0E-01	6.5E-03
acetone	(N)	ND	3.0E-01	6.0E-03	BP	3.4E-01	7.4E-03	ND	3.1E-01	7.1E-03		1.1E-01	2.5E-03
acrolein	(H)	ND	2.8E-01	5.3E-03	ND	2.8E-01	5.9E-03	ND	2.8E-01	6.3E-03	ND	2.8E-01	5.8E-03
benzene	(H)	ND	7.8E-02	2.1E-03	ND	7.9E-02	2.3E-03	ND	7.8E-02	2.4E-03	ND	7.8E-02	2.3E-03
bromomethane	(H)	ND	7.8E-02	2.6E-03	ND	7.9E-02	2.7E-03	ND	7.8E-02	2.9E-03	ND	7.8E-02	2.7E-03
camphene		ND	1.6E+00	7.3E-02	ND	1.6E+00	7.9E-02	ND	1.6E+00	8.4E-02	ND	1.6E+00	7.9E-02
3-carene		ND	1.6E+00	7.3E-02	ND	1.6E+00	7.9E-02	ND	1.6E+00	8.4E-02	ND	1.6E+00	7.9E-02
chloroethane	(H)	ND	7.8E-02	1.7E-03	ND	7.9E-02	1.9E-03	ND	7.8E-02	2.0E-03	ND	7.8E-02	1.9E-03
chloroethene	(H)	ND	7.8E-02	1.7E-03	ND	7.9E-02	1.8E-03	ND	7.8E-02	1.9E-03	ND	7.8E-02	1.8E-03
cumene	(H)	ND	1.6E+00	6.5E-02	ND	1.6E+00	6.9E-02	ND	1.6E+00	7.4E-02	ND	1.6E+00	7.0E-02
p-cymene		ND	1.6E+00	7.2E-02	ND	1.6E+00	7.8E-02	ND	1.6E+00	8.3E-02	ND	1.6E+00	7.8E-02
1,2-dichloroethane	(H)	ND	7.8E-02	2.7E-03	ND	7.9E-02	2.9E-03	ND	7.8E-02	3.1E-03	ND	7.8E-02	2.9E-03
cis-1,2-dichloroethylene		ND	7.8E-02	2.6E-03	ND	7.9E-02	2.8E-03	ND	7.8E-02	3.0E-03	ND	7.8E-02	2.8E-03
formaldehyde	(H)	BP	2.8E-01	2.9E-03	BP	4.2E-01	4.6E-03	ND	1.4E-01	1.7E-03		2.3E-01	2.5E-03
limonene		ND	1.6E+00	7.3E-02	ND	1.6E+00	7.9E-02	ND	1.6E+00	8.4E-02	ND	1.6E+00	7.9E-02
p-mentha-1,5-diene		ND	1.6E+00	7.3E-02	ND	1.6E+00	7.9E-02	ND	1.6E+00	8.4E-02	ND	1.6E+00	7.9E-02
methanol	(H)		1.6E+00	1.8E-02		1.9E+00	2.2E-02	BP	1.3E+00	1.6E-02		1.6E+00	1.9E-02
methyl ethyl ketone (MEK)	(H)	ND	2.7E-01	6.7E-03	ND	2.8E-01	7.4E-03	ND	2.7E-01	7.9E-03	ND	2.7E-01	7.3E-03
methyl isobutyl ketone	(H)	ND	1.9E-01	6.5E-03	ND	1.9E-01	7.1E-03	ND	1.9E-01	7.6E-03	ND	1.9E-01	7.1E-03
methylene chloride	(H)	ND	7.8E-02	2.3E-03	ND	7.9E-02	2.5E-03	ND	7.8E-02	2.6E-03	ND	7.8E-02	2.5E-03
phenol	(H)	ND	3.3E-01	1.1E-02	ND	3.4E-01	1.2E-02	ND	3.4E-01	1.3E-02	ND	3.4E-01	1.2E-02
alpha-pinene			1.7E+00	8.1E-02		1.7E+00	8.6E-02		1.8E+00	9.9E-02		1.8E+00	8.9E-02
beta-pinene		ND	1.6E+00	7.3E-02	ND	1.6E+00	7.9E-02	ND	1.6E+00	8.4E-02	ND	1.6E+00	7.9E-02
propionaldehyde	(H)	ND	3.0E-01	6.0E-03	ND	3.1E-01	6.6E-03	ND	3.1E-01	7.1E-03	ND	3.1E-01	6.6E-03
styrene	(H)	ND	7.8E-02	2.8E-03	ND	7.9E-02	3.0E-03	ND	7.8E-02	3.2E-03	ND	7.8E-02	3.0E-03
toluene	(H)	ND	7.8E-02	2.5E-03	ND	7.9E-02	2.7E-03	ND	7.8E-02	2.8E-03	ND	7.8E-02	2.7E-03
1,2,4-trichlorobenzene	(H)	ND	7.8E-02	4.9E-03	ND	7.9E-02	5.2E-03	ND	7.8E-02	5.6E-03	ND	7.8E-02	5.2E-03
m,p-xylene	(H)	ND	7.8E-02	2.9E-03	ND	7.9E-02	3.1E-03	ND	7.8E-02	3.3E-03	ND	7.8E-02	3.1E-03
o-xylene	(H)	ND	7.8E-02	2.9E-03	ND	7.9E-02	3.1E-03	ND	7.8E-02	3.3E-03	ND	7.8E-02	3.1E-03
THC as Carbon		NA			NA			NA					
Total HAPs				2.1E-02			2.7E-02			1.6E-02			2.1E-02
Total Terpenes				8.1E-02			8.6E-02			9.9E-02			8.9E-02
Production Rate (MSF 3/8 /hr)				5.0			5.0			4.6			4.9
Vol. Flow Rate (DSCFM)				1.1E+04			1.2E+04			1.2E+04			1.2E+04
Source Moisture (%)				2.1			1.7			1.0			1.6
Source Temp (°C)				38.1			37.6			38.5			38.1

ND x.xxEx = Below detection limit of x.xxEx; BP = Below practical quantitation limit; IM = Below detection limit in impinger sample; NA = Not analyzed by this method; H = CAA HAP; N = Not a HAP or VOC as defined by US EPA; TM = Start and end times for THC and speciated compounds differ; QA = Failed quality assurance; MSF = 1000 square feet; ODTH = Oven Dried Tons per Hour; AI = Analytical Interference; MLF = 1000 Linear Feet; MCF = 1000 Cubic Feet

Table B31. Summary of Emission Test Results
Softwood Plywood Hot Press, Combined Press Exhaust (165-XPB1)

Analyte		165-XPB1N1			165-XPB1N2			165-XPB1N3			Average Emission		
			ppmVd	lb/MSF		ppmVd	lb/MSF		ppmVd	lb/MSF		ppmVd	lb/MSF
acetaldehyde	(H)	BP	1.0E+00	3.4E-03		1.3E+00	3.4E-03		1.3E+00	4.0E-03		1.2E+00	3.6E-03
acetone	(N)	BP	7.4E-01	3.2E-03		1.0E+00	3.5E-03		8.1E-01	3.2E-03		8.6E-01	3.3E-03
acrolein	(H)	ND	2.8E-01	1.2E-03	ND	2.5E-01	8.2E-04	ND	2.8E-01	1.1E-03	ND	2.7E-01	1.0E-03
benzene	(H)	ND	8.4E-02	5.0E-04	ND	7.1E-02	3.2E-04	ND	8.2E-02	4.3E-04	ND	7.9E-02	4.2E-04
bromomethane	(H)	ND	8.4E-02	6.1E-04	ND	7.1E-02	3.9E-04	ND	8.2E-02	5.3E-04	ND	7.9E-02	5.1E-04
camphene		ND	1.7E+00	1.7E-02	ND	1.4E+00	1.1E-02	ND	1.6E+00	1.5E-02	ND	1.6E+00	1.5E-02
3-carene		ND	1.7E+00	1.7E-02	ND	1.4E+00	1.1E-02	ND	1.6E+00	1.5E-02	ND	1.6E+00	1.5E-02
chloroethane	(H)	ND	8.4E-02	4.1E-04	ND	7.1E-02	2.7E-04	ND	8.2E-02	3.6E-04	ND	7.9E-02	3.5E-04
chloroethene	(H)	ND	8.4E-02	4.0E-04	ND	7.1E-02	2.6E-04	ND	8.2E-02	3.5E-04	ND	7.9E-02	3.3E-04
cumene	(H)	ND	1.7E+00	1.5E-02	ND	1.4E+00	9.9E-03	ND	1.6E+00	1.3E-02	ND	1.6E+00	1.3E-02
p-cymene		ND	1.7E+00	1.7E-02	ND	1.4E+00	1.1E-02	ND	1.6E+00	1.5E-02	ND	1.6E+00	1.4E-02
1,2-dichloroethane	(H)	ND	8.4E-02	6.3E-04	ND	7.1E-02	4.1E-04	ND	8.2E-02	5.5E-04	ND	7.9E-02	5.3E-04
cis-1,2-dichloroethylene		ND	8.4E-02	6.2E-04	ND	7.1E-02	4.0E-04	ND	8.2E-02	5.4E-04	ND	7.9E-02	5.2E-04
formaldehyde	(H)	ND	1.2E-01	2.8E-04		6.0E-01	1.0E-03	ND	1.2E-01	2.5E-04		2.0E-01	3.5E-04
limonene		ND	1.7E+00	1.7E-02	ND	1.4E+00	1.1E-02	ND	1.6E+00	1.5E-02	ND	1.6E+00	1.5E-02
p-mentha-1,5-diene		ND	1.7E+00	1.7E-02	ND	1.4E+00	1.1E-02	ND	1.6E+00	1.5E-02	ND	1.6E+00	1.5E-02
methanol	(H)		3.4E+01	8.3E-02		5.0E+01	9.2E-02		5.5E+01	1.2E-01		4.6E+01	9.8E-02
methyl ethyl ketone (MEK)	(H)	ND	2.7E-01	1.5E-03	ND	2.5E-01	1.0E-03	ND	2.7E-01	1.3E-03	ND	2.6E-01	1.3E-03
methyl isobutyl ketone	(H)	ND	1.9E-01	1.5E-03	ND	1.7E-01	1.0E-03	ND	1.9E-01	1.3E-03	ND	1.9E-01	1.3E-03
methylene chloride	(H)	ND	8.4E-02	5.4E-04	ND	7.1E-02	3.5E-04	ND	8.2E-02	4.7E-04	ND	7.9E-02	4.5E-04
phenol	(H)	ND	3.4E-01	2.4E-03	ND	3.0E-01	1.7E-03	ND	3.3E-01	2.1E-03	ND	3.2E-01	2.1E-03
alpha-pinene			1.6E+01	1.6E-01		1.6E+01	1.3E-01		2.0E+01	1.8E-01		1.7E+01	1.6E-01
beta-pinene			5.3E+00	5.5E-02		4.9E+00	3.9E-02		6.6E+00	6.1E-02		5.6E+00	5.2E-02
propionaldehyde	(H)	ND	3.0E-01	1.3E-03	ND	2.7E-01	9.3E-04	ND	3.0E-01	1.2E-03	ND	2.9E-01	1.2E-03
styrene	(H)	ND	8.4E-02	6.6E-04	ND	7.1E-02	4.3E-04	ND	8.2E-02	5.8E-04	ND	7.9E-02	5.6E-04
toluene	(H)	ND	8.4E-02	5.9E-04	ND	7.1E-02	3.8E-04	ND	8.2E-02	5.1E-04	ND	7.9E-02	4.9E-04
1,2,4-trichlorobenzene	(H)	ND	8.4E-02	1.2E-03	ND	7.1E-02	7.5E-04	ND	8.2E-02	1.0E-03	ND	7.9E-02	9.7E-04
m,p-xylene	(H)	ND	8.4E-02	6.8E-04	ND	7.1E-02	4.4E-04	ND	8.2E-02	5.9E-04	ND	7.9E-02	5.7E-04
o-xylene	(H)	ND	8.4E-02	6.8E-04	ND	7.1E-02	4.4E-04	ND	8.2E-02	5.9E-04	ND	7.9E-02	5.7E-04
THC as Carbon			3.2E+02	2.9E-01		4.2E+02	2.9E-01		4.7E+02	3.9E-01		4.0E+02	3.2E-01
Total HAPs				8.7E-02			9.6E-02			1.2E-01			1.0E-01
Total Terpenes				2.2E-01			1.7E-01			2.5E-01			2.1E-01
Production Rate (MSF 3/8 /hr)				30.0			46.1			36.9			37.6
Vol. Flow Rate (DSCFM)				1.5E+04			1.7E+04			1.6E+04			1.6E+04
Source Moisture (%)				3.0			3.3			3.6			3.3
Source Temp (°C)				40.8			42.2			42.1			41.7

ND x.xxEx = Below detection limit of x.xxEx; BP = Below practical quantitation limit; IM = Below detection limit in impinger sample; NA = Not analyzed by this method; H = CAA HAP; N = Not a HAP or VOC as defined by US EPA; TM = Start and end times for THC and speciated compounds differ; QA = Failed quality assurance; MSF = 1000 square feet; ODTH = Oven Dried Tons per Hour; AI = Analytical Interference; MLF = 1000 Linear Feet; MCF = 1000 Cubic Feet

12/9/99
9:10 AM

Table B32. Summary of Emission Test Results
Radio Frequency Dryer, RF Dryer Exhaust (165-1DM1)

Analyte		165-1DM1N1			165-1DM1N2			165-1DM1N3			Average Emission		
			ppmVd	lb/MSF		ppmVd	lb/MSF		ppmVd	lb/MSF		ppmVd	lb/MSF
acetaldehyde	(H)		1.6E+00	3.0E-03		1.6E+00	2.8E-03		1.7E+00	3.0E-03		1.6E+00	2.9E-03
acetone	(N)	BP	5.2E-01	1.3E-03	BP	5.4E-01	1.3E-03		7.0E-01	1.6E-03		5.9E-01	1.4E-03
acrolein	(H)	ND	3.5E-01	8.3E-04	ND	2.8E-01	6.3E-04	ND	2.6E-01	5.7E-04	ND	3.0E-01	6.8E-04
benzene	(H)	ND	8.0E-02	2.6E-04	ND	7.6E-02	2.4E-04	ND	8.0E-02	2.4E-04	ND	7.9E-02	2.5E-04
bromomethane	(H)	ND	8.0E-02	3.2E-04	ND	7.6E-02	2.9E-04	ND	8.0E-02	3.0E-04	ND	7.9E-02	3.0E-04
camphene		ND	1.6E+00	9.1E-03	ND	1.5E+00	8.4E-03	ND	1.6E+00	8.5E-03	ND	1.6E+00	8.7E-03
3-carene		ND	1.6E+00	9.1E-03	ND	1.5E+00	8.4E-03	ND	1.6E+00	8.5E-03	ND	1.6E+00	8.7E-03
chloroethane	(H)	ND	8.0E-02	2.2E-04	ND	7.6E-02	2.0E-04	ND	8.0E-02	2.0E-04	ND	7.9E-02	2.1E-04
chloroethene	(H)	ND	8.0E-02	2.1E-04	ND	7.6E-02	1.9E-04	ND	8.0E-02	1.9E-04	ND	7.9E-02	2.0E-04
cumene	(H)	ND	1.6E+00	8.1E-03	ND	1.5E+00	7.5E-03	ND	1.6E+00	7.5E-03	ND	1.6E+00	7.7E-03
p-cymene		ND	1.6E+00	9.0E-03	ND	1.5E+00	8.3E-03	ND	1.6E+00	8.4E-03	ND	1.6E+00	8.6E-03
1,2-dichloroethane	(H)	ND	8.0E-02	3.3E-04	ND	7.6E-02	3.1E-04	ND	8.0E-02	3.1E-04	ND	7.9E-02	3.2E-04
cis-1,2-dichloroethylene		ND	8.0E-02	3.2E-04	ND	7.6E-02	3.0E-04	ND	8.0E-02	3.0E-04	ND	7.9E-02	3.1E-04
formaldehyde	(H)	BP	4.4E-01	5.5E-04		6.9E-01	8.5E-04		4.8E-01	5.6E-04		5.4E-01	6.5E-04
limonene		ND	1.6E+00	9.1E-03		2.0E+00	1.1E-02	ND	1.6E+00	8.5E-03		6.5E-01	3.6E-03
p-mentha-1,5-diene		ND	1.6E+00	9.1E-03	ND	1.5E+00	8.4E-03	ND	1.6E+00	8.5E-03	ND	1.6E+00	8.7E-03
methanol	(H)		3.5E+00	4.7E-03		4.1E+00	5.4E-03		3.5E+00	4.4E-03		3.7E+00	4.8E-03
methyl ethyl ketone (MEK)	(H)	ND	3.5E-01	1.0E-03	ND	2.7E-01	8.0E-04	ND	2.6E-01	7.2E-04	ND	2.9E-01	8.6E-04
methyl isobutyl ketone	(H)	ND	2.3E-01	9.8E-04	ND	1.9E-01	7.7E-04	ND	1.8E-01	7.1E-04	ND	2.0E-01	8.2E-04
methylene chloride	(H)	ND	8.0E-02	2.8E-04	ND	7.6E-02	2.6E-04	ND	8.0E-02	2.6E-04	ND	7.9E-02	2.7E-04
phenol	(H)	ND	4.3E-01	1.7E-03	ND	3.3E-01	1.3E-03	ND	3.2E-01	1.2E-03	ND	3.6E-01	1.4E-03
alpha-pinene			6.2E+01	3.6E-01		6.1E+01	3.4E-01		5.6E+01	3.0E-01		6.0E+01	3.3E-01
beta-pinene			1.9E+01	1.1E-01		2.0E+01	1.1E-01		2.1E+01	1.1E-01		2.0E+01	1.1E-01
propionaldehyde	(H)	ND	3.9E-01	9.5E-04	ND	3.0E-01	7.1E-04	ND	2.9E-01	6.5E-04	ND	3.3E-01	7.7E-04
styrene	(H)	ND	8.0E-02	3.5E-04	ND	7.6E-02	3.2E-04	ND	8.0E-02	3.2E-04	ND	7.9E-02	3.3E-04
toluene	(H)	ND	8.0E-02	3.1E-04	ND	7.6E-02	2.9E-04	ND	8.0E-02	2.9E-04	ND	7.9E-02	2.9E-04
1,2,4-trichlorobenzene	(H)	ND	8.0E-02	6.1E-04	ND	7.6E-02	5.6E-04	ND	8.0E-02	5.7E-04	ND	7.9E-02	5.8E-04
m,p-xylene	(H)	ND	8.0E-02	3.6E-04	ND	7.6E-02	3.3E-04	ND	8.0E-02	3.3E-04	ND	7.9E-02	3.4E-04
o-xylene	(H)	ND	8.0E-02	3.6E-04	ND	7.6E-02	3.3E-04	ND	8.0E-02	3.3E-04	ND	7.9E-02	3.4E-04
THC as Carbon		TM	1.0E+03	5.0E-01		9.6E+02	4.7E-01		1.0E+03	4.8E-01		1.0E+03	4.9E-01
Total HAPs				8.2E-03			9.1E-03			8.0E-03			8.4E-03
Total Terpenes				4.6E-01			4.6E-01			4.1E-01			4.5E-01
Production Rate (MSF 3/8 /hr)				4.2			3.8			4.0			4.0
Vol. Flow Rate (DSCFM)				1.1E+03			1.0E+03			1.0E+03			1.0E+03
Source Moisture (%)				7.6			10.9			17.4			12.0
Source Temp (°C)				95.6			95.3			92.6			94.5

ND x.xxEx = Below detection limit of x.xxEx; BP = Below practical quantitation limit; IM = Below detection limit in impinger sample; NA = Not analyzed by this method; H = CAA HAP; N = Not a HAP or VOC as defined by US EPA; TM = Start and end times for THC and speciated compounds differ; QA = Failed quality assurance; MSF = 1000 square feet; ODTH = Oven Dried Tons per Hour; AI = Analytical Interference; MLF = 1000 Linear Feet; MCF = 1000 Cubic Feet

Table B33. Summary of Emission Test Results
Dry Trim Chipper Vents, Veneer Dry Trim Chipper Cyclone Exhaust (165-1WD1)

Analyte		165-1WD1N1			165-1WD1N2			165-1WD1N3			Average Emission		
			ppmVd	lb/MSF		ppmVd	lb/MSF		ppmVd	lb/MSF		ppmVd	lb/MSF
acetaldehyde	(H)	BP	4.7E-01	1.3E-03	ND	4.2E-01	1.2E-03	ND	4.0E-01	1.1E-03		1.6E-01	4.3E-04
acetone	(N)	BP	3.6E-01	1.3E-03	ND	3.2E-01	1.2E-03	ND	3.0E-01	1.1E-03		1.2E-01	4.3E-04
acrolein	(H)	ND	2.9E-01	1.0E-03	ND	2.9E-01	1.0E-03	ND	2.8E-01	9.8E-04	ND	2.9E-01	1.0E-03
benzene	(H)	ND	8.7E-02	4.2E-04	ND	8.6E-02	4.3E-04	ND	7.5E-02	3.7E-04	ND	8.3E-02	4.1E-04
bromomethane	(H)	ND	8.7E-02	5.1E-04	ND	8.6E-02	5.2E-04	ND	7.5E-02	4.5E-04	ND	8.3E-02	4.9E-04
camphene		ND	1.7E+00	1.5E-02	ND	1.7E+00	1.5E-02	ND	1.5E+00	1.3E-02	ND	1.7E+00	1.4E-02
3-carene		ND	1.7E+00	1.5E-02	ND	1.7E+00	1.5E-02	ND	1.5E+00	1.3E-02	ND	1.7E+00	1.4E-02
chloroethane	(H)	ND	8.7E-02	3.5E-04	ND	8.6E-02	3.5E-04	ND	7.5E-02	3.0E-04	ND	8.3E-02	3.3E-04
chloroethene	(H)	ND	8.7E-02	3.4E-04	ND	8.6E-02	3.4E-04	ND	7.5E-02	2.9E-04	ND	8.3E-02	3.2E-04
cumene	(H)	ND	1.7E+00	1.3E-02	ND	1.7E+00	1.3E-02	ND	1.5E+00	1.1E-02	ND	1.7E+00	1.2E-02
p-cymene		ND	1.7E+00	1.4E-02	ND	1.7E+00	1.5E-02	ND	1.5E+00	1.3E-02	ND	1.7E+00	1.4E-02
1,2-dichloroethane	(H)	ND	8.7E-02	5.3E-04	ND	8.6E-02	5.4E-04	ND	7.5E-02	4.7E-04	ND	8.3E-02	5.1E-04
cis-1,2-dichloroethylene		ND	8.7E-02	5.2E-04	ND	8.6E-02	5.3E-04	ND	7.5E-02	4.6E-04	ND	8.3E-02	5.0E-04
formaldehyde	(H)	BP	3.8E-01	7.1E-04	ND	1.6E-01	2.9E-04	ND	1.6E-01	3.0E-04		1.3E-01	2.4E-04
limonene		ND	1.7E+00	1.5E-02	ND	1.7E+00	1.5E-02	ND	1.5E+00	1.3E-02	ND	1.7E+00	1.4E-02
p-mentha-1,5-diene		ND	1.7E+00	1.5E-02	ND	1.7E+00	1.5E-02	ND	1.5E+00	1.3E-02	ND	1.7E+00	1.4E-02
methanol	(H)		4.4E+00	8.7E-03		4.6E+00	9.3E-03		4.0E+00	8.0E-03		4.3E+00	8.7E-03
methyl ethyl ketone (MEK)	(H)	ND	2.9E-01	1.3E-03	ND	2.9E-01	1.3E-03	ND	2.7E-01	1.2E-03	ND	2.8E-01	1.3E-03
methyl isobutyl ketone	(H)	ND	2.0E-01	1.3E-03	ND	2.0E-01	1.3E-03	ND	1.9E-01	1.2E-03	ND	2.0E-01	1.2E-03
methylene chloride	(H)	ND	8.7E-02	4.6E-04	ND	8.6E-02	4.6E-04	ND	7.5E-02	4.0E-04	ND	8.3E-02	4.4E-04
phenol	(H)	IM	3.7E-01	2.2E-03	IM	4.1E-01	2.4E-03	ND	3.4E-01	2.0E-03		2.6E-01	1.5E-03
alpha-pinene			3.8E+00	3.2E-02		3.8E+00	3.2E-02		3.7E+00	3.2E-02		3.8E+00	3.2E-02
beta-pinene		ND	1.7E+00	1.5E-02	ND	1.7E+00	1.5E-02	ND	1.5E+00	1.3E-02	ND	1.7E+00	1.4E-02
propionaldehyde	(H)	ND	3.2E-01	1.2E-03	ND	3.2E-01	1.2E-03	ND	3.0E-01	1.1E-03	ND	3.2E-01	1.1E-03
styrene	(H)	ND	8.7E-02	5.6E-04	ND	8.6E-02	5.7E-04	ND	7.5E-02	4.9E-04	ND	8.3E-02	5.4E-04
toluene	(H)	ND	8.7E-02	5.0E-04	ND	8.6E-02	5.0E-04	ND	7.5E-02	4.3E-04	ND	8.3E-02	4.8E-04
1,2,4-trichlorobenzene	(H)	ND	8.7E-02	9.8E-04	ND	8.6E-02	9.9E-04	ND	7.5E-02	8.6E-04	ND	8.3E-02	9.4E-04
m,p-xylene	(H)	ND	8.7E-02	5.7E-04	ND	8.6E-02	5.8E-04	ND	7.5E-02	5.0E-04	ND	8.3E-02	5.5E-04
o-xylene	(H)	ND	8.7E-02	5.7E-04	ND	8.6E-02	5.8E-04	ND	7.5E-02	5.0E-04	ND	8.3E-02	5.5E-04
THC as Carbon			7.6E+01	5.7E-02		7.6E+01	5.7E-02		8.2E+01	6.2E-02		7.8E+01	5.9E-02
Total HAPs				1.3E-02			1.2E-02			8.0E-03			1.1E-02
Total Terpenes				3.2E-02			3.2E-02			3.2E-02			3.2E-02
Production Rate (MSF 3/8 /hr)				89.9			89.9			89.9			89.9
Vol. Flow Rate (DSCFM)				3.6E+04			3.6E+04			3.6E+04			3.6E+04
Source Moisture (%)				1.1			1.2			1.1			1.2
Source Temp (°C)				28.7			29.3			28.2			28.7

ND x.xxEx = Below detection limit of x.xxEx; BP = Below practical quantitation limit; IM = Below detection limit in impinger sample; NA = Not analyzed by this method; H = CAA HAP; N = Not a HAP or VOC as defined by US EPA; TM = Start and end times for THC and speciated compounds differ; QA = Failed quality assurance; MSF = 1000 square feet; ODTH = Oven Dried Tons per Hour; AI = Analytical Interference; MLF = 1000 Linear Feet; MCF = 1000 Cubic Feet

12/9/99
9:11 AM

Table B34. Summary of Emission Test Results
Dry Trim Chipper Vents, Panel Dry Trim Chipper Cyclone Exhaust (165-1WR1)

Analyte		165-1WR1N1			165-1WR1N2			165-1WR1N3			Average Emission		
			ppmVd	lb/MSF		ppmVd	lb/MSF		ppmVd	lb/MSF		ppmVd	lb/MSF
acetaldehyde	(H)	ND	4.1E-01	1.6E-03	ND	4.0E-01	1.6E-03	ND	3.9E-01	1.6E-03	ND	4.0E-01	1.6E-03
acetone	(N)	ND	3.1E-01	1.7E-03	ND	3.1E-01	1.6E-03	ND	3.0E-01	1.6E-03	ND	3.1E-01	1.6E-03
acrolein	(H)	ND	2.9E-01	1.5E-03	ND	2.8E-01	1.4E-03	ND	2.7E-01	1.4E-03	ND	2.8E-01	1.4E-03
benzene	(H)	ND	8.4E-02	6.1E-04	ND	7.7E-02	5.4E-04	ND	7.2E-02	5.1E-04	ND	7.8E-02	5.5E-04
bromomethane	(H)	ND	8.4E-02	7.4E-04	ND	7.7E-02	6.6E-04	ND	7.2E-02	6.2E-04	ND	7.8E-02	6.7E-04
camphene		ND	1.7E+00	2.1E-02	ND	1.5E+00	1.9E-02	ND	1.4E+00	1.8E-02	ND	1.6E+00	1.9E-02
3-carene		ND	1.7E+00	2.1E-02	ND	1.5E+00	1.9E-02	ND	1.4E+00	1.8E-02	ND	1.6E+00	1.9E-02
chloroethane	(H)	ND	8.4E-02	5.0E-04	ND	7.7E-02	4.5E-04	ND	7.2E-02	4.2E-04	ND	7.8E-02	4.6E-04
chloroethene	(H)	ND	8.4E-02	4.8E-04	ND	7.7E-02	4.3E-04	ND	7.2E-02	4.1E-04	ND	7.8E-02	4.4E-04
cumene	(H)	ND	1.7E+00	1.9E-02	ND	1.5E+00	1.7E-02	ND	1.4E+00	1.6E-02	ND	1.6E+00	1.7E-02
p-cymene		ND	1.7E+00	2.1E-02	ND	1.5E+00	1.9E-02	ND	1.4E+00	1.7E-02	ND	1.6E+00	1.9E-02
1,2-dichloroethane	(H)	ND	8.4E-02	7.7E-04	ND	7.7E-02	6.9E-04	ND	7.2E-02	6.4E-04	ND	7.8E-02	7.0E-04
cis-1,2-dichloroethylene		ND	8.4E-02	7.5E-04	ND	7.7E-02	6.7E-04	ND	7.2E-02	6.3E-04	ND	7.8E-02	6.9E-04
formaldehyde	(H)	ND	1.5E-01	4.3E-04	ND	1.7E-01	4.6E-04	ND	1.4E-01	3.8E-04	ND	1.5E-01	4.2E-04
limonene		ND	1.7E+00	2.1E-02	ND	1.5E+00	1.9E-02	ND	1.4E+00	1.8E-02	ND	1.6E+00	1.9E-02
p-mentha-1,5-diene		ND	1.7E+00	2.1E-02	ND	1.5E+00	1.9E-02	ND	1.4E+00	1.8E-02	ND	1.6E+00	1.9E-02
methanol	(H)		2.5E+00	7.3E-03	ND	5.2E-01	1.5E-03		5.3E+00	1.5E-02		2.6E+00	7.5E-03
methyl ethyl ketone (MEK)	(H)	ND	2.8E-01	1.9E-03	ND	2.7E-01	1.8E-03	ND	2.7E-01	1.8E-03	ND	2.7E-01	1.8E-03
methyl isobutyl ketone	(H)	ND	2.0E-01	1.8E-03	ND	1.9E-01	1.7E-03	ND	1.9E-01	1.7E-03	ND	1.9E-01	1.7E-03
methylene chloride	(H)	ND	8.4E-02	6.6E-04	ND	7.7E-02	5.9E-04	ND	7.2E-02	5.5E-04	ND	7.8E-02	6.0E-04
phenol	(H)	ND	3.4E-01	3.0E-03	ND	3.4E-01	2.9E-03	ND	3.3E-01	2.9E-03	ND	3.4E-01	2.9E-03
alpha-pinene			3.2E+00	4.1E-02		3.4E+00	4.2E-02		2.0E+00	2.5E-02		2.9E+00	3.6E-02
beta-pinene		ND	1.7E+00	2.1E-02	ND	1.5E+00	1.9E-02	ND	1.4E+00	1.8E-02	ND	1.6E+00	1.9E-02
propionaldehyde	(H)	ND	3.1E-01	1.7E-03	ND	3.1E-01	1.6E-03	ND	3.0E-01	1.6E-03	ND	3.1E-01	1.6E-03
styrene	(H)	ND	8.4E-02	8.1E-04	ND	7.7E-02	7.2E-04	ND	7.2E-02	6.8E-04	ND	7.8E-02	7.4E-04
toluene	(H)	ND	8.4E-02	7.1E-04	ND	7.7E-02	6.4E-04	ND	7.2E-02	6.0E-04	ND	7.8E-02	6.5E-04
1,2,4-trichlorobenzene	(H)	ND	8.4E-02	1.4E-03	ND	7.7E-02	1.3E-03	ND	7.2E-02	1.2E-03	ND	7.8E-02	1.3E-03
m,p-xylene	(H)	ND	8.4E-02	8.2E-04	ND	7.7E-02	7.4E-04	ND	7.2E-02	6.9E-04	ND	7.8E-02	7.5E-04
o-xylene	(H)	ND	8.4E-02	8.2E-04	ND	7.7E-02	7.4E-04	ND	7.2E-02	6.9E-04	ND	7.8E-02	7.5E-04
THC as Carbon		NA				5.2E+01	5.6E-02	NA				5.2E+01	5.6E-02
Total HAPs				7.3E-03			0.0E+00			1.5E-02			7.5E-03
Total Terpenes				4.1E-02			4.2E-02			2.5E-02			3.6E-02
Production Rate (MSF 3/8 /hr)				48.1			48.1			48.1			48.1
Vol. Flow Rate (DSCFM)				2.9E+04			2.8E+04			2.8E+04			2.8E+04
Source Moisture (%)				1.3			1.2			1.1			1.2
Source Temp (°C)				33.4			35.7			31.6			33.6

ND x.xxEx = Below detection limit of x.xxEx; BP = Below practical quantitation limit; IM = Below detection limit in impinger sample; NA = Not analyzed by this method; H = CAA HAP; N = Not a HAP or VOC as defined by US EPA; TM = Start and end times for THC and speciated compounds differ; QA = Failed quality assurance; MSF = 1000 square feet; ODTH = Oven Dried Tons per Hour; AI = Analytical Interference; MLF = 1000 Linear Feet; MCF = 1000 Cubic Feet

Table B35. Summary of Emission Test Results
Softwood Veneer Dryer, RTO Exhaust (165-XDV1)

Analyte		165-XDV1N1			165-XDV1N2			165-XDV1N3			Average Emission		
			ppmVd	lb/MSF		ppmVd	lb/MSF		ppmVd	lb/MSF		ppmVd	lb/MSF
acetaldehyde	(H)	ND	3.9E-01	2.9E-03	BP	4.2E-01	2.7E-03	ND	3.7E-01	2.9E-03		1.4E-01	9.0E-04
acetone	(N)	BP	3.2E-01	3.2E-03	ND	2.9E-01	2.5E-03	ND	2.8E-01	2.9E-03		1.1E-01	1.1E-03
acrolein	(H)	ND	2.7E-01	2.6E-03	ND	2.7E-01	2.2E-03	ND	2.6E-01	2.5E-03	ND	2.7E-01	2.5E-03
benzene	(H)	ND	7.8E-02	1.0E-03	ND	7.0E-02	8.0E-04	ND	6.6E-02	9.1E-04	ND	7.2E-02	9.2E-04
bromomethane	(H)	ND	7.8E-02	1.3E-03	ND	7.0E-02	9.7E-04	ND	6.6E-02	1.1E-03	ND	7.2E-02	1.1E-03
camphene		ND	1.6E+00	3.6E-02	ND	1.4E+00	2.8E-02	ND	1.3E+00	3.2E-02	ND	1.4E+00	3.2E-02
3-carene		ND	1.6E+00	3.6E-02	ND	1.4E+00	2.8E-02	ND	1.3E+00	3.2E-02	ND	1.4E+00	3.2E-02
chloroethane	(H)	ND	7.8E-02	8.6E-04	ND	7.0E-02	6.6E-04	ND	6.6E-02	7.5E-04	ND	7.2E-02	7.6E-04
chloroethene	(H)	ND	7.8E-02	8.3E-04	ND	7.0E-02	6.4E-04	ND	6.6E-02	7.3E-04	ND	7.2E-02	7.3E-04
cumene	(H)	ND	1.6E+00	3.2E-02	ND	1.4E+00	2.5E-02	ND	1.3E+00	2.8E-02	ND	1.4E+00	2.8E-02
p-cymene		ND	1.6E+00	3.6E-02	ND	1.4E+00	2.7E-02	ND	1.3E+00	3.1E-02	ND	1.4E+00	3.2E-02
1,2-dichloroethane	(H)	ND	7.8E-02	1.3E-03	ND	7.0E-02	1.0E-03	ND	6.6E-02	1.2E-03	ND	7.2E-02	1.2E-03
cis-1,2-dichloroethylene		ND	7.8E-02	1.3E-03	ND	7.0E-02	9.9E-04	ND	6.6E-02	1.1E-03	ND	7.2E-02	1.1E-03
formaldehyde	(H)	BP	2.5E-01	1.3E-03	ND	1.2E-01	5.2E-04	ND	1.3E-01	6.7E-04		8.4E-02	4.3E-04
limonene		ND	1.6E+00	3.6E-02	ND	1.4E+00	2.8E-02	ND	1.3E+00	3.2E-02	ND	1.4E+00	3.2E-02
p-mentha-1,5-diene		ND	1.6E+00	3.6E-02	ND	1.4E+00	2.8E-02	ND	1.3E+00	3.2E-02	ND	1.4E+00	3.2E-02
methanol	(H)	BP	7.2E-01	3.9E-03	ND	5.0E-01	2.3E-03	ND	4.8E-01	2.7E-03		2.4E-01	1.3E-03
methyl ethyl ketone (MEK)	(H)	ND	2.7E-01	3.3E-03	ND	2.6E-01	2.7E-03	ND	2.5E-01	3.2E-03	ND	2.6E-01	3.1E-03
methyl isobutyl ketone	(H)	ND	1.9E-01	3.2E-03	ND	1.8E-01	2.6E-03	ND	1.7E-01	3.1E-03	ND	1.8E-01	3.0E-03
methylene chloride	(H)	ND	7.8E-02	1.1E-03	ND	7.0E-02	8.7E-04	ND	6.6E-02	9.9E-04	ND	7.2E-02	1.0E-03
phenol	(H)	ND	3.3E-01	5.3E-03	ND	3.2E-01	4.4E-03	IM	3.8E-01	6.3E-03		1.3E-01	2.1E-03
alpha-pinene			1.8E+00	4.1E-02		1.7E+00	3.4E-02		1.6E+00	3.9E-02		1.7E+00	3.8E-02
beta-pinene		ND	1.6E+00	3.6E-02	ND	1.4E+00	2.8E-02	ND	1.3E+00	3.2E-02	ND	1.4E+00	3.2E-02
propionaldehyde	(H)	ND	3.0E-01	3.0E-03	ND	2.9E-01	2.5E-03	ND	2.8E-01	2.9E-03	ND	2.9E-01	2.8E-03
styrene	(H)	ND	7.8E-02	1.4E-03	ND	7.0E-02	1.1E-03	ND	6.6E-02	1.2E-03	ND	7.2E-02	1.2E-03
toluene	(H)	ND	7.8E-02	1.2E-03	ND	7.0E-02	9.4E-04	ND	6.6E-02	1.1E-03	ND	7.2E-02	1.1E-03
1,2,4-trichlorobenzene	(H)	ND	7.8E-02	2.4E-03	ND	7.0E-02	1.9E-03	ND	6.6E-02	2.1E-03	ND	7.2E-02	2.1E-03
m,p-xylene	(H)	ND	7.8E-02	1.4E-03	ND	7.0E-02	1.1E-03	ND	6.6E-02	1.2E-03	ND	7.2E-02	1.2E-03
o-xylene	(H)	ND	7.8E-02	1.4E-03	ND	7.0E-02	1.1E-03	ND	6.6E-02	1.2E-03	ND	7.2E-02	1.2E-03
THC as Carbon		TM	8.2E+01	1.7E-01		8.6E+01	1.5E-01		9.3E+01	2.0E-01		8.7E+01	1.7E-01
Total HAPs				5.2E-03			2.7E-03			6.3E-03			4.7E-03
Total Terpenes				4.1E-02			3.4E-02			3.9E-02			3.8E-02
Production Rate (MSF 3/8 /hr)				46.4			50.9			44.7			47.3
Vol. Flow Rate (DSCFM)				5.1E+04			4.8E+04			5.1E+04			5.0E+04
Source Moisture (%)				26.8			27.0			32.3			28.7
Source Temp (°C)				196.4			193.6			194.4			194.8

ND x.xxEx = Below detection limit of x.xxEx; BP = Below practical quantitation limit; IM = Below detection limit in impinger sample; NA = Not analyzed by this method; H = CAA HAP; N = Not a HAP or VOC as defined by US EPA; TM = Start and end times for THC and speciated compounds differ; QA = Failed quality assurance; MSF = 1000 square feet; ODTH = Oven Dried Tons per Hour; AI = Analytical Interference; MLF = 1000 Linear Feet; MCF = 1000 Cubic Feet

12/9/99
9:11 AM

Table B36. Summary of Emission Test Results
Softwood Veneer Dryer, No. 2 Combined Vent (170-2DV3)

Analyte		170-2DV3N1			170-2DV3N2			170-2DV3N3			Average Emission		
			ppmVd	lb/MSF		ppmVd	lb/MSF		ppmVd	lb/MSF		ppmVd	lb/MSF
acetaldehyde	(H)		6.9E+00	1.8E-02		5.6E+00	1.9E-02		2.4E+00	7.2E-03		5.0E+00	1.5E-02
acetone	(N)		3.6E+00	1.2E-02		3.4E+00	1.5E-02		5.8E+00	2.3E-02		4.3E+00	1.7E-02
acrolein	(H)	ND	2.8E-01	9.3E-04	ND	2.8E-01	1.2E-03	ND	3.1E-01	1.1E-03	ND	2.9E-01	1.1E-03
benzene	(H)	ND	9.2E-02	4.2E-04	ND	8.0E-02	4.9E-04	ND	9.0E-02	4.7E-04	ND	8.7E-02	4.6E-04
bromomethane	(H)	ND	9.2E-02	5.1E-04	ND	8.0E-02	6.0E-04	ND	9.0E-02	5.7E-04	ND	8.7E-02	5.6E-04
camphene		ND	1.8E+00	1.5E-02	ND	1.6E+00	1.7E-02	ND	1.8E+00	1.6E-02	ND	1.7E+00	1.6E-02
3-carene		ND	1.8E+00	1.5E-02	ND	1.6E+00	1.7E-02	ND	1.8E+00	1.6E-02	ND	1.7E+00	1.6E-02
chloroethane	(H)	ND	9.2E-02	3.5E-04	ND	8.0E-02	4.1E-04	ND	9.0E-02	3.9E-04	ND	8.7E-02	3.8E-04
chloroethene	(H)	ND	9.2E-02	3.4E-04	ND	8.0E-02	3.9E-04	ND	9.0E-02	3.8E-04	ND	8.7E-02	3.7E-04
cumene	(H)	ND	1.8E+00	1.3E-02	ND	1.6E+00	1.5E-02	ND	1.8E+00	1.4E-02	ND	1.7E+00	1.4E-02
p-cymene		ND	1.8E+00	1.4E-02	ND	1.6E+00	1.7E-02	ND	1.8E+00	1.6E-02	ND	1.7E+00	1.6E-02
1,2-dichloroethane	(H)	ND	9.2E-02	5.3E-04	ND	8.0E-02	6.2E-04	ND	9.0E-02	6.0E-04	ND	8.7E-02	5.8E-04
cis-1,2-dichloroethylene		ND	9.2E-02	5.2E-04	ND	8.0E-02	6.1E-04	ND	9.0E-02	5.8E-04	ND	8.7E-02	5.7E-04
formaldehyde	(H)		3.2E+00	5.7E-03		2.2E+00	5.1E-03		4.5E+00	9.1E-03		3.3E+00	6.6E-03
limonene			3.8E+01	3.0E-01		1.6E+01	1.7E-01		3.2E+01	2.9E-01		2.9E+01	2.5E-01
p-mentha-1,5-diene			3.8E+00	3.1E-02		2.3E+00	2.4E-02		2.0E+00	1.8E-02		2.7E+00	2.4E-02
methanol	(H)		1.7E+01	3.2E-02		1.0E+01	2.6E-02		7.7E+00	1.6E-02		1.2E+01	2.5E-02
methyl ethyl ketone (MEK)	(H)	ND	2.8E-01	1.2E-03	ND	2.8E-01	1.6E-03	ND	3.0E-01	1.4E-03	ND	2.9E-01	1.4E-03
methyl isobutyl ketone	(H)	ND	2.0E-01	1.2E-03	ND	1.9E-01	1.5E-03	ND	2.1E-01	1.4E-03	ND	2.0E-01	1.4E-03
methylene chloride	(H)	ND	9.2E-02	4.6E-04	ND	8.0E-02	5.3E-04	ND	9.0E-02	5.1E-04	ND	8.7E-02	5.0E-04
phenol	(H)	ND	3.4E-01	1.9E-03	ND	3.4E-01	2.5E-03	ND	3.7E-01	2.3E-03	ND	3.5E-01	2.2E-03
alpha-pinene			4.0E+02	3.2E+00		2.3E+02	2.4E+00		2.7E+02	2.4E+00		3.0E+02	2.7E+00
beta-pinene			1.0E+02	8.1E-01		5.6E+01	6.0E-01		8.0E+01	7.3E-01		7.9E+01	7.1E-01
propionaldehyde	(H)	ND	3.1E-01	1.0E-03	ND	3.1E-01	1.4E-03	ND	3.3E-01	1.3E-03	ND	3.2E-01	1.3E-03
styrene	(H)	ND	9.2E-02	5.6E-04	ND	8.0E-02	6.6E-04	ND	9.0E-02	6.3E-04	ND	8.7E-02	6.1E-04
toluene	(H)	ND	9.2E-02	5.0E-04	ND	8.0E-02	5.8E-04	ND	9.0E-02	5.5E-04	ND	8.7E-02	5.4E-04
1,2,4-trichlorobenzene	(H)	ND	9.2E-02	9.8E-04	ND	8.0E-02	1.1E-03	ND	9.0E-02	1.1E-03	ND	8.7E-02	1.1E-03
m,p-xylene	(H)	ND	9.2E-02	5.7E-04	ND	8.0E-02	6.7E-04	ND	9.0E-02	6.4E-04	ND	8.7E-02	6.3E-04
o-xylene	(H)	ND	9.2E-02	5.7E-04	ND	8.0E-02	6.7E-04	ND	9.0E-02	6.4E-04	ND	8.7E-02	6.3E-04
THC as Carbon													
Total HAPs				5.6E-02			5.0E-02			3.3E-02			4.6E-02
Total Terpenes				4.3E+00			3.2E+00			3.5E+00			3.7E+00
Production Rate (MSF 3/8 /hr)				17.0			11.1			14.5			14.2
Vol. Flow Rate (DSCFM)				6.4E+03			5.6E+03			6.2E+03			6.1E+03
Source Moisture (%)				52.5			53.5			53.3			53.1
Source Temp (°C)				165.6			165.7			165.6			165.6

ND x.xxEx = Below detection limit of x.xxEx; BP = Below practical quantitation limit; IM = Below detection limit in impinger sample; NA = Not analyzed by this method; H = CAA HAP; N = Not a HAP or VOC as defined by US EPA; TM = Start and end times for THC and speciated compounds differ; QA = Failed quality assurance; MSF = 1000 square feet; ODTH = Oven Dried Tons per Hour; AI = Analytical Interference; MLF = 1000 Linear Feet; MCF = 1000 Cubic Feet

Table B37. Summary of Emission Test Results
Softwood Veneer Dryer, No. 2 Dryer, Veneer Cooling Section Exhaust No. 1 (170-2DV4)

Analyte		170-2DV4N1			170-2DV4N2			170-2DV4N3			Average Emission		
			ppmVd	lb/MSF		ppmVd	lb/MSF		ppmVd	lb/MSF		ppmVd	lb/MSF
acetaldehyde	(H)	ND	4.3E-01	1.8E-03	ND	3.8E-01	1.6E-03	ND	3.9E-01	1.5E-03	ND	4.0E-01	1.6E-03
acetone	(N)	BP	3.4E-01	1.8E-03	BP	3.2E-01	1.8E-03	ND	3.0E-01	1.5E-03		2.2E-01	1.2E-03
acrolein	(H)	ND	3.0E-01	1.6E-03	ND	2.7E-01	1.4E-03	ND	2.8E-01	1.3E-03	ND	2.8E-01	1.4E-03
benzene	(H)	ND	9.0E-02	6.6E-04	ND	7.4E-02	5.4E-04	ND	8.0E-02	5.3E-04	ND	8.2E-02	5.8E-04
bromomethane	(H)	ND	9.0E-02	8.1E-04	ND	7.4E-02	6.6E-04	ND	8.0E-02	6.5E-04	ND	8.2E-02	7.0E-04
camphene		ND	1.8E+00	2.3E-02	ND	1.5E+00	1.9E-02	ND	1.6E+00	1.9E-02	ND	1.6E+00	2.0E-02
3-carene		ND	1.8E+00	2.3E-02	ND	1.5E+00	1.9E-02	ND	1.6E+00	1.9E-02	ND	1.6E+00	2.0E-02
chloroethane	(H)	ND	9.0E-02	5.5E-04	ND	7.4E-02	4.5E-04	ND	8.0E-02	4.4E-04	ND	8.2E-02	4.8E-04
chloroethene	(H)	ND	9.0E-02	5.3E-04	ND	7.4E-02	4.3E-04	ND	8.0E-02	4.3E-04	ND	8.2E-02	4.6E-04
cumene	(H)	ND	1.8E+00	2.0E-02	ND	1.5E+00	1.7E-02	ND	1.6E+00	1.6E-02	ND	1.6E+00	1.8E-02
p-cymene		ND	1.8E+00	2.3E-02	ND	1.5E+00	1.9E-02	ND	1.6E+00	1.8E-02	ND	1.6E+00	2.0E-02
1,2-dichloroethane	(H)	ND	9.0E-02	8.4E-04	ND	7.4E-02	6.9E-04	ND	8.0E-02	6.8E-04	ND	8.2E-02	7.3E-04
cis-1,2-dichloroethylene		ND	9.0E-02	8.2E-04	ND	7.4E-02	6.7E-04	ND	8.0E-02	6.6E-04	ND	8.2E-02	7.2E-04
formaldehyde	(H)	ND	1.5E-01	4.3E-04	BP	1.8E-01	5.0E-04	ND	9.9E-02	2.5E-04		5.9E-02	1.7E-04
limonene		ND	1.8E+00	2.3E-02	ND	1.5E+00	1.9E-02	ND	1.6E+00	1.9E-02	ND	1.6E+00	2.0E-02
p-mentha-1,5-diene		ND	1.8E+00	2.3E-02	ND	1.5E+00	1.9E-02	ND	1.6E+00	1.9E-02	ND	1.6E+00	2.0E-02
methanol	(H)	BP	6.0E-01	1.8E-03	BP	7.8E-01	2.3E-03	ND	5.1E-01	1.4E-03		4.6E-01	1.4E-03
methyl ethyl ketone (MEK)	(H)	ND	3.0E-01	2.0E-03	ND	2.6E-01	1.8E-03	ND	2.7E-01	1.7E-03	ND	2.8E-01	1.8E-03
methyl isobutyl ketone	(H)	ND	2.1E-01	2.0E-03	ND	1.8E-01	1.7E-03	ND	1.9E-01	1.6E-03	ND	1.9E-01	1.8E-03
methylene chloride	(H)	ND	9.0E-02	7.2E-04	ND	7.4E-02	5.9E-04	ND	8.0E-02	5.8E-04	ND	8.2E-02	6.3E-04
phenol	(H)	ND	3.6E-01	3.2E-03	ND	3.3E-01	2.9E-03	ND	3.3E-01	2.7E-03	ND	3.4E-01	2.9E-03
alpha-pinene			1.9E+00	2.4E-02		1.6E+00	2.0E-02	ND	1.6E+00	1.9E-02		1.1E+00	1.5E-02
beta-pinene		ND	1.8E+00	2.3E-02	ND	1.5E+00	1.9E-02	ND	1.6E+00	1.9E-02	ND	1.6E+00	2.0E-02
propionaldehyde	(H)	ND	3.3E-01	1.8E-03	ND	2.9E-01	1.6E-03	ND	3.0E-01	1.5E-03	ND	3.1E-01	1.6E-03
styrene	(H)	ND	9.0E-02	8.8E-04	ND	7.4E-02	7.2E-04	ND	8.0E-02	7.1E-04	ND	8.2E-02	7.7E-04
toluene	(H)	ND	9.0E-02	7.8E-04	ND	7.4E-02	6.4E-04	ND	8.0E-02	6.3E-04	ND	8.2E-02	6.8E-04
1,2,4-trichlorobenzene	(H)	ND	9.0E-02	1.5E-03	ND	7.4E-02	1.3E-03	ND	8.0E-02	1.2E-03	ND	8.2E-02	1.3E-03
m,p-xylene	(H)	ND	9.0E-02	9.0E-04	ND	7.4E-02	7.4E-04	ND	8.0E-02	7.3E-04	ND	8.2E-02	7.9E-04
o-xylene	(H)	ND	9.0E-02	9.0E-04	ND	7.4E-02	7.4E-04	ND	8.0E-02	7.3E-04	ND	8.2E-02	7.9E-04
THC as Carbon		TM	3.9E+01	4.3E-02		3.7E+01	4.2E-02		3.0E+01	3.0E-02		3.5E+01	3.9E-02
Total HAPs				1.8E-03			2.8E-03			0.0E+00			1.6E-03
Total Terpenes				2.4E-02			2.0E-02			0.0E+00			1.5E-02
Production Rate (MSF 3/8 /hr)				16.4			18.1			18.5			17.7
Vol. Flow Rate (DSCFM)				9.9E+03			1.1E+04			1.0E+04			1.0E+04
Source Moisture (%)				2.0			1.9			1.8			1.9
Source Temp (°C)				44.3			34.7			35.0			38.0

ND x.xxEx = Below detection limit of x.xxEx; BP = Below practical quantitation limit; IM = Below detection limit in impinger sample; NA = Not analyzed by this method; H = CAA HAP; N = Not a HAP or VOC as defined by US EPA; TM = Start and end times for THC and speciated compounds differ; QA = Failed quality assurance; MSF = 1000 square feet; ODTH = Oven Dried Tons per Hour; AI = Analytical Interference; MLF = 1000 Linear Feet; MCF = 1000 Cubic Feet

12/9/99
9:11 AM

Table B38. Summary of Emission Test Results
Softwood Veneer Dryer, No. 2 Dryer, Veneer Cooling Section Exhaust No. 2 (170-2DV5)

Analyte		170-2DV5N1			170-2DV5N2			170-2DV5N3			Average Emission		
			ppmVd	lb/MSF		ppmVd	lb/MSF		ppmVd	lb/MSF		ppmVd	lb/MSF
acetaldehyde	(H)	ND	4.2E-01	1.8E-03	ND	4.0E-01	1.7E-03	ND	3.8E-01	1.5E-03	ND	4.0E-01	1.6E-03
acetone	(N)	ND	3.2E-01	1.8E-03	ND	3.1E-01	1.7E-03	ND	2.9E-01	1.5E-03	ND	3.1E-01	1.7E-03
acrolein	(H)	ND	3.0E-01	1.6E-03	ND	2.8E-01	1.5E-03	ND	2.6E-01	1.3E-03	ND	2.8E-01	1.5E-03
benzene	(H)	ND	8.4E-02	6.2E-04	ND	7.4E-02	5.6E-04	ND	7.2E-02	5.0E-04	ND	7.7E-02	5.6E-04
bromomethane	(H)	ND	8.4E-02	7.5E-04	ND	7.4E-02	6.8E-04	ND	7.2E-02	6.1E-04	ND	7.7E-02	6.8E-04
camphene		ND	1.7E+00	2.2E-02	ND	1.5E+00	1.9E-02	ND	1.4E+00	1.7E-02	ND	1.5E+00	2.0E-02
3-carene		ND	1.7E+00	2.2E-02	ND	1.5E+00	1.9E-02	ND	1.4E+00	1.7E-02	ND	1.5E+00	2.0E-02
chloroethane	(H)	ND	8.4E-02	5.1E-04	ND	7.4E-02	4.6E-04	ND	7.2E-02	4.1E-04	ND	7.7E-02	4.6E-04
chloroethene	(H)	ND	8.4E-02	5.0E-04	ND	7.4E-02	4.5E-04	ND	7.2E-02	4.0E-04	ND	7.7E-02	4.5E-04
cumene	(H)	ND	1.7E+00	1.9E-02	ND	1.5E+00	1.7E-02	ND	1.4E+00	1.5E-02	ND	1.5E+00	1.7E-02
p-cymene		ND	1.7E+00	2.1E-02	ND	1.5E+00	1.9E-02	ND	1.4E+00	1.7E-02	ND	1.5E+00	1.9E-02
1,2-dichloroethane	(H)	ND	8.4E-02	7.8E-04	ND	7.4E-02	7.1E-04	ND	7.2E-02	6.4E-04	ND	7.7E-02	7.1E-04
cis-1,2-dichloroethylene		ND	8.4E-02	7.7E-04	ND	7.4E-02	6.9E-04	ND	7.2E-02	6.2E-04	ND	7.7E-02	6.9E-04
formaldehyde	(H)	ND	1.4E-01	3.9E-04	ND	1.3E-01	3.7E-04	BP	1.8E-01	4.8E-04		5.9E-02	1.6E-04
limonene		ND	1.7E+00	2.2E-02	ND	1.5E+00	1.9E-02	ND	1.4E+00	1.7E-02	ND	1.5E+00	2.0E-02
p-mentha-1,5-diene		ND	1.7E+00	2.2E-02	ND	1.5E+00	1.9E-02	ND	1.4E+00	1.7E-02	ND	1.5E+00	2.0E-02
methanol	(H)	ND	5.5E-01	1.7E-03	ND	5.3E-01	1.6E-03	ND	4.9E-01	1.4E-03	ND	5.2E-01	1.6E-03
methyl ethyl ketone (MEK)	(H)	ND	2.9E-01	2.0E-03	ND	2.8E-01	1.9E-03	ND	2.6E-01	1.7E-03	ND	2.7E-01	1.9E-03
methyl isobutyl ketone	(H)	ND	2.0E-01	1.9E-03	ND	1.9E-01	1.8E-03	ND	1.8E-01	1.6E-03	ND	1.9E-01	1.8E-03
methylene chloride	(H)	ND	8.4E-02	6.7E-04	ND	7.4E-02	6.1E-04	ND	7.2E-02	5.5E-04	ND	7.7E-02	6.1E-04
phenol	(H)	ND	3.6E-01	3.2E-03	ND	3.4E-01	3.1E-03	ND	3.2E-01	2.7E-03	ND	3.4E-01	3.0E-03
alpha-pinene		ND	1.7E+00	2.2E-02	ND	1.5E+00	1.9E-02	ND	1.4E+00	1.7E-02	ND	1.5E+00	2.0E-02
beta-pinene		ND	1.7E+00	2.2E-02	ND	1.5E+00	1.9E-02	ND	1.4E+00	1.7E-02	ND	1.5E+00	2.0E-02
propionaldehyde	(H)	ND	3.2E-01	1.8E-03	ND	3.1E-01	1.7E-03	ND	2.9E-01	1.5E-03	ND	3.1E-01	1.7E-03
styrene	(H)	ND	8.4E-02	8.3E-04	ND	7.4E-02	7.4E-04	ND	7.2E-02	6.7E-04	ND	7.7E-02	7.5E-04
toluene	(H)	ND	8.4E-02	7.3E-04	ND	7.4E-02	6.6E-04	ND	7.2E-02	5.9E-04	ND	7.7E-02	6.6E-04
1,2,4-trichlorobenzene	(H)	ND	8.4E-02	1.4E-03	ND	7.4E-02	1.3E-03	ND	7.2E-02	1.2E-03	ND	7.7E-02	1.3E-03
m,p-xylene	(H)	ND	8.4E-02	8.4E-04	ND	7.4E-02	7.6E-04	ND	7.2E-02	6.8E-04	ND	7.7E-02	7.6E-04
o-xylene	(H)	ND	8.4E-02	8.4E-04	ND	7.4E-02	7.6E-04	ND	7.2E-02	6.8E-04	ND	7.7E-02	7.6E-04
THC as Carbon						2.7E+01	3.1E-02		1.8E+01	2.0E-02		2.3E+01	2.6E-02
Total HAPs				0.0E+00			0.0E+00			4.8E-04			1.6E-04
Total Terpenes				0.0E+00			0.0E+00			0.0E+00			0.0E+00
Production Rate (MSF 3/8 /hr)				16.4			18.1			18.5			17.7
Vol. Flow Rate (DSCFM)				9.9E+03			1.1E+04			1.1E+04			1.1E+04
Source Moisture (%)				1.6			1.4			1.3			1.4
Source Temp (°C)				36.7			37.2			38.0			37.3

ND x.xxEx = Below detection limit of x.xxEx; BP = Below practical quantitation limit; IM = Below detection limit in impinger sample; NA = Not analyzed by this method; H = CAA HAP; N = Not a HAP or VOC as defined by US EPA; TM = Start and end times for THC and speciated compounds differ; QA = Failed quality assurance; MSF = 1000 square feet; ODTH = Oven Dried Tons per Hour; AI = Analytical Interference; MLF = 1000 Linear Feet; MCF = 1000 Cubic Feet

Table B39. Summary of Emission Test Results
Softwood Veneer Dryer, No. 2 Dryer, Veneer Cooling Section Exhaust No. 3 (170-2DV6)

Analyte		170-2DV6N2			170-2DV6N3						Average Emission		
			ppmVd	lb/MSF		ppmVd	lb/MSF		ppmVd	lb/MSF		ppmVd	lb/MSF
acetaldehyde	(H)	ND	3.9E-01	1.7E-03	ND	3.8E-01	1.4E-03				ND	3.9E-01	1.6E-03
acetone	(N)	IM	3.2E-01	1.9E-03	ND	3.0E-01	1.5E-03					1.6E-01	9.4E-04
acrolein	(H)	ND	2.8E-01	1.6E-03	ND	2.8E-01	1.3E-03				ND	2.8E-01	1.4E-03
benzene	(H)	ND	7.5E-02	5.9E-04	ND	1.0E-01	6.9E-04				ND	8.9E-02	6.4E-04
bromomethane	(H)	ND	7.5E-02	7.2E-04	ND	1.0E-01	8.4E-04				ND	8.9E-02	7.8E-04
camphene		ND	1.5E+00	2.1E-02	ND	2.1E+00	2.4E-02				ND	1.8E+00	2.2E-02
3-carene		ND	1.5E+00	2.1E-02	ND	2.1E+00	2.4E-02				ND	1.8E+00	2.2E-02
chloroethane	(H)	ND	7.5E-02	4.9E-04	ND	1.0E-01	5.7E-04				ND	8.9E-02	5.3E-04
chloroethene	(H)	ND	7.5E-02	4.7E-04	ND	1.0E-01	5.5E-04				ND	8.9E-02	5.1E-04
cumene	(H)	ND	1.5E+00	1.8E-02	ND	2.1E+00	2.1E-02				ND	1.8E+00	2.0E-02
p-cymene		ND	1.5E+00	2.0E-02	ND	2.1E+00	2.4E-02				ND	1.8E+00	2.2E-02
1,2-dichloroethane	(H)	ND	7.5E-02	7.5E-04	ND	1.0E-01	8.7E-04				ND	8.9E-02	8.1E-04
cis-1,2-dichloroethylene		ND	7.5E-02	7.4E-04	ND	1.0E-01	8.6E-04				ND	8.9E-02	8.0E-04
formaldehyde	(H)	ND	1.3E-01	4.0E-04		4.5E-01	1.2E-03					2.3E-01	5.8E-04
limonene		ND	1.5E+00	2.1E-02	ND	2.1E+00	2.4E-02				ND	1.8E+00	2.2E-02
p-mentha-1,5-diene		ND	1.5E+00	2.1E-02	ND	2.1E+00	2.4E-02				ND	1.8E+00	2.2E-02
methanol	(H)	ND	5.1E-01	1.7E-03	ND	4.9E-01	1.3E-03				ND	5.0E-01	1.5E-03
methyl ethyl ketone (MEK)	(H)	ND	2.7E-01	2.0E-03	ND	2.7E-01	1.7E-03				ND	2.7E-01	1.8E-03
methyl isobutyl ketone	(H)	ND	1.9E-01	1.9E-03	ND	2.0E-01	1.7E-03				ND	1.9E-01	1.8E-03
methylene chloride	(H)	ND	7.5E-02	6.5E-04	ND	1.0E-01	7.5E-04				ND	8.9E-02	7.0E-04
phenol	(H)	ND	3.3E-01	3.2E-03	ND	3.3E-01	2.6E-03				ND	3.3E-01	2.9E-03
alpha-pinene		ND	1.5E+00	2.1E-02	ND	2.1E+00	2.4E-02				ND	1.8E+00	2.2E-02
beta-pinene		ND	1.5E+00	2.1E-02	ND	2.1E+00	2.4E-02				ND	1.8E+00	2.2E-02
propionaldehyde	(H)	ND	3.0E-01	1.8E-03	ND	3.0E-01	1.5E-03				ND	3.0E-01	1.6E-03
styrene	(H)	ND	7.5E-02	7.9E-04	ND	1.0E-01	9.2E-04				ND	8.9E-02	8.6E-04
toluene	(H)	ND	7.5E-02	7.0E-04	ND	1.0E-01	8.1E-04				ND	8.9E-02	7.6E-04
1,2,4-trichlorobenzene	(H)	ND	7.5E-02	1.4E-03	ND	1.0E-01	1.6E-03				ND	8.9E-02	1.5E-03
m,p-xylene	(H)	ND	7.5E-02	8.1E-04	ND	1.0E-01	9.4E-04				ND	8.9E-02	8.7E-04
o-xylene	(H)	ND	7.5E-02	8.1E-04	ND	1.0E-01	9.4E-04				ND	8.9E-02	8.7E-04
THC as Carbon													
Total HAPs				0.0E+00			1.2E-03						5.8E-04
Total Terpenes				0.0E+00			0.0E+00						0.0E+00
Production Rate (MSF 3/8 /hr)				18.1			18.5						18.3
Vol. Flow Rate (DSCFM)				1.2E+04			1.0E+04						1.1E+04
Source Moisture (%)				1.1			1.0						1.1
Source Temp (°C)				29.1			29.9						29.5

ND x.xxEx = Below detection limit of x.xxEx; BP = Below practical quantitation limit; IM = Below detection limit in impinger sample; NA = Not analyzed by this method; H = CAA HAP; N = Not a HAP or VOC as defined by US EPA; TM = Start and end times for THC and speciated compounds differ; QA = Failed quality assurance; MSF = 1000 square feet; ODTH = Oven Dried Tons per Hour; AI = Analytical Interference; MLF = 1000 Linear Feet; MCF = 1000 Cubic Feet

12/9/99
9:11 AM

Table B40. Summary of Emission Test Results
Softwood Veneer Dryer, No. 3 Combined Vent (170-3DV3)

Analyte		170-3DV3N1			170-3DV3N2			170-3DV3N3			Average Emission		
			ppmVd	lb/MSF		ppmVd	lb/MSF		ppmVd	lb/MSF		ppmVd	lb/MSF
acetaldehyde	(H)		5.0E+00	2.4E-02		5.0E+00	2.3E-02		3.8E+00	1.3E-02		4.6E+00	2.0E-02
acetone	(N)		4.3E+00	2.7E-02		4.4E+00	2.6E-02		3.9E+00	1.8E-02		4.2E+00	2.4E-02
acrolein	(H)	ND	2.7E-01	1.6E-03	ND	2.7E-01	1.6E-03	ND	2.8E-01	1.2E-03	ND	2.7E-01	1.5E-03
benzene	(H)	ND	7.1E-02	6.1E-04	ND	7.7E-02	6.3E-04	ND	8.1E-02	5.0E-04	ND	7.6E-02	5.8E-04
bromomethane	(H)	ND	7.1E-02	7.4E-04	ND	7.7E-02	7.6E-04	ND	8.1E-02	6.0E-04	ND	7.6E-02	7.0E-04
camphene		ND	1.4E+00	2.1E-02	ND	1.5E+00	2.2E-02	ND	1.6E+00	1.7E-02	ND	1.5E+00	2.0E-02
3-carene		ND	1.4E+00	2.1E-02	ND	1.5E+00	2.2E-02	ND	1.6E+00	1.7E-02	ND	1.5E+00	2.0E-02
chloroethane	(H)	ND	7.1E-02	5.0E-04	ND	7.7E-02	5.2E-04	ND	8.1E-02	4.1E-04	ND	7.6E-02	4.8E-04
chloroethene	(H)	ND	7.1E-02	4.9E-04	ND	7.7E-02	5.0E-04	ND	8.1E-02	4.0E-04	ND	7.6E-02	4.6E-04
cumene	(H)	ND	1.4E+00	1.9E-02	ND	1.5E+00	1.9E-02	ND	1.6E+00	1.5E-02	ND	1.5E+00	1.8E-02
p-cymene		ND	1.4E+00	2.1E-02	ND	1.5E+00	2.2E-02	ND	1.6E+00	1.7E-02	ND	1.5E+00	2.0E-02
1,2-dichloroethane	(H)	ND	7.1E-02	7.7E-04	ND	7.7E-02	8.0E-04	ND	8.1E-02	6.3E-04	ND	7.6E-02	7.3E-04
cis-1,2-dichloroethylene		ND	7.1E-02	7.6E-04	ND	7.7E-02	7.8E-04	ND	8.1E-02	6.2E-04	ND	7.6E-02	7.2E-04
formaldehyde	(H)		3.9E+00	1.3E-02		2.1E+00	6.7E-03	BP	3.8E-01	9.1E-04		2.1E+00	6.8E-03
limonene			1.6E+01	2.4E-01		1.5E+01	2.2E-01		1.2E+01	1.3E-01		1.5E+01	2.0E-01
p-mentha-1,5-diene			1.7E+00	2.6E-02		1.7E+00	2.5E-02	ND	1.6E+00	1.7E-02		1.2E+00	1.7E-02
methanol	(H)		2.5E+01	8.8E-02		1.4E+01	4.6E-02		1.1E+01	2.7E-02		1.7E+01	5.4E-02
methyl ethyl ketone (MEK)	(H)	ND	2.6E-01	2.1E-03	ND	2.7E-01	2.0E-03	ND	2.8E-01	1.6E-03	ND	2.7E-01	1.9E-03
methyl isobutyl ketone	(H)	ND	1.8E-01	2.0E-03	ND	1.9E-01	2.0E-03	ND	1.9E-01	1.5E-03	ND	1.9E-01	1.8E-03
methylene chloride	(H)	ND	7.1E-02	6.6E-04	ND	7.7E-02	6.8E-04	ND	8.1E-02	5.4E-04	ND	7.6E-02	6.3E-04
phenol	(H)	ND	3.2E-01	3.3E-03	ND	3.3E-01	3.2E-03	IM	4.1E-01	3.0E-03		1.4E-01	1.0E-03
alpha-pinene			1.5E+02	2.3E+00		1.7E+02	2.5E+00		9.0E+01	9.6E-01		1.4E+02	1.9E+00
beta-pinene			3.5E+01	5.2E-01		4.5E+01	6.4E-01		2.6E+01	2.8E-01		3.5E+01	4.8E-01
propionaldehyde	(H)	ND	2.9E-01	1.9E-03	ND	3.0E-01	1.8E-03	ND	3.1E-01	1.4E-03	ND	3.0E-01	1.7E-03
styrene	(H)	ND	7.1E-02	8.1E-04	ND	7.7E-02	8.4E-04	ND	8.1E-02	6.6E-04	ND	7.6E-02	7.7E-04
toluene	(H)	ND	7.1E-02	7.2E-04	ND	7.7E-02	7.4E-04	ND	8.1E-02	5.8E-04	ND	7.6E-02	6.8E-04
1,2,4-trichlorobenzene	(H)	ND	7.1E-02	1.4E-03	ND	7.7E-02	1.5E-03	ND	8.1E-02	1.2E-03	ND	7.6E-02	1.3E-03
m,p-xylene	(H)	ND	7.1E-02	8.3E-04	ND	7.7E-02	8.5E-04	ND	8.1E-02	6.7E-04	ND	7.6E-02	7.9E-04
o-xylene	(H)	ND	7.1E-02	8.3E-04	ND	7.7E-02	8.5E-04	ND	8.1E-02	6.7E-04	ND	7.6E-02	7.9E-04
THC as Carbon													
Total HAPs				1.3E-01			7.5E-02			4.4E-02			8.1E-02
Total Terpenes				3.1E+00			3.4E+00			1.4E+00			2.6E+00
Production Rate (MSF 3/8 /hr)				9.6			10.4			13.8			11.3
Vol. Flow Rate (DSCFM)				6.8E+03			7.0E+03			6.9E+03			6.9E+03
Source Moisture (%)				30.6			30.7			30.3			30.5
Source Temp (°C)				169.3			169.7			169.5			169.5

ND x.xxEx = Below detection limit of x.xxEx; BP = Below practical quantitation limit; IM = Below detection limit in impinger sample; NA = Not analyzed by this method; H = CAA HAP; N = Not a HAP or VOC as defined by US EPA; TM = Start and end times for THC and speciated compounds differ; QA = Failed quality assurance; MSF = 1000 square feet; ODTH = Oven Dried Tons per Hour; AI = Analytical Interference; MLF = 1000 Linear Feet; MCF = 1000 Cubic Feet

Table B41. Summary of Emission Test Results
Softwood Plywood Hot Press, No. 3 Press Vent (170-3PB1)

Analyte		170-3PB1N1			170-3PB1N2			170-3PB1N3			Average Emission		
			ppmVd	lb/MSF		ppmVd	lb/MSF		ppmVd	lb/MSF		ppmVd	lb/MSF
acetaldehyde	(H)		2.8E+00	1.1E-02		3.6E+00	1.6E-02		2.3E+00	9.2E-03		2.9E+00	1.2E-02
acetone	(N)		3.4E+00	1.7E-02		2.6E+00	1.6E-02		2.8E+00	1.5E-02		3.0E+00	1.6E-02
acrolein	(H)	ND	3.1E-01	1.5E-03	ND	3.2E-01	1.8E-03	ND	2.7E-01	1.4E-03	ND	3.0E-01	1.6E-03
benzene	(H)	ND	8.2E-02	5.5E-04	ND	8.4E-02	6.7E-04	ND	7.9E-02	5.6E-04	ND	8.2E-02	5.9E-04
bromomethane	(H)	ND	8.2E-02	6.7E-04	ND	8.4E-02	8.1E-04	ND	7.9E-02	6.8E-04	ND	8.2E-02	7.2E-04
camphene		ND	1.6E+00	1.9E-02	ND	1.7E+00	2.3E-02	ND	1.6E+00	2.0E-02	ND	1.6E+00	2.1E-02
3-carene		ND	1.6E+00	1.9E-02	ND	1.7E+00	2.3E-02	ND	1.6E+00	2.0E-02	ND	1.6E+00	2.1E-02
chloroethane	(H)	ND	8.2E-02	4.5E-04	ND	8.4E-02	5.5E-04	ND	7.9E-02	4.6E-04	ND	8.2E-02	4.9E-04
chloroethene	(H)	ND	8.2E-02	4.4E-04	ND	8.4E-02	5.3E-04	ND	7.9E-02	4.5E-04	ND	8.2E-02	4.7E-04
cumene	(H)	ND	1.6E+00	1.7E-02	ND	1.7E+00	2.1E-02	ND	1.6E+00	1.7E-02	ND	1.6E+00	1.8E-02
p-cymene		ND	1.6E+00	1.9E-02	ND	1.7E+00	2.3E-02	ND	1.6E+00	1.9E-02	ND	1.6E+00	2.0E-02
1,2-dichloroethane	(H)	ND	8.2E-02	6.9E-04	ND	8.4E-02	8.5E-04	ND	7.9E-02	7.1E-04	ND	8.2E-02	7.5E-04
cis-1,2-dichloroethylene		ND	8.2E-02	6.8E-04	ND	8.4E-02	8.3E-04	ND	7.9E-02	7.0E-04	ND	8.2E-02	7.4E-04
formaldehyde	(H)		2.2E+00	5.6E-03		6.9E-01	2.1E-03		1.3E+00	3.6E-03		1.4E+00	3.8E-03
limonene			2.6E+00	3.1E-02	ND	1.7E+00	2.3E-02	ND	1.6E+00	2.0E-02		8.7E-01	1.0E-02
p-mentha-1,5-diene		ND	1.6E+00	1.9E-02	ND	1.7E+00	2.3E-02	ND	1.6E+00	2.0E-02	ND	1.6E+00	2.1E-02
methanol	(H)		9.7E+01	2.7E-01		1.2E+02	4.1E-01		1.0E+02	3.0E-01		1.1E+02	3.3E-01
methyl ethyl ketone (MEK)	(H)	ND	3.1E-01	1.9E-03	ND	3.1E-01	2.3E-03	ND	2.6E-01	1.7E-03	ND	2.9E-01	2.0E-03
methyl isobutyl ketone	(H)	ND	2.1E-01	1.8E-03	ND	2.1E-01	2.2E-03	ND	1.8E-01	1.7E-03	ND	2.0E-01	1.9E-03
methylene chloride	(H)	ND	8.2E-02	6.0E-04	ND	8.4E-02	7.3E-04	ND	7.9E-02	6.1E-04	ND	8.2E-02	6.4E-04
phenol	(H)	ND	3.8E-01	3.1E-03	ND	3.8E-01	3.7E-03	IM	3.7E-01	3.2E-03		1.2E-01	1.1E-03
alpha-pinene			1.4E+01	1.7E-01		1.3E+01	1.9E-01		1.1E+01	1.3E-01		1.3E+01	1.6E-01
beta-pinene			5.2E+00	6.1E-02		4.1E+00	5.7E-02		3.4E+00	4.2E-02		4.2E+00	5.3E-02
propionaldehyde	(H)	ND	3.4E-01	1.7E-03	ND	3.4E-01	2.0E-03	ND	2.9E-01	1.5E-03	ND	3.3E-01	1.8E-03
styrene	(H)	ND	8.2E-02	7.3E-04	ND	8.4E-02	8.9E-04	ND	7.9E-02	7.5E-04	ND	8.2E-02	7.9E-04
toluene	(H)	ND	8.2E-02	6.5E-04	ND	8.4E-02	7.9E-04	ND	7.9E-02	6.6E-04	ND	8.2E-02	7.0E-04
1,2,4-trichlorobenzene	(H)	ND	8.2E-02	1.3E-03	ND	8.4E-02	1.6E-03	ND	7.9E-02	1.3E-03	ND	8.2E-02	1.4E-03
m,p-xylene	(H)	ND	8.2E-02	7.5E-04	ND	8.4E-02	9.1E-04	ND	7.9E-02	7.6E-04	ND	8.2E-02	8.1E-04
o-xylene	(H)	ND	8.2E-02	7.5E-04	ND	8.4E-02	9.1E-04	ND	7.9E-02	7.6E-04	ND	8.2E-02	8.1E-04
THC as Carbon			2.6E+02	2.7E-01		3.1E+02	3.8E-01		2.8E+02	3.0E-01		2.8E+02	3.2E-01
Total HAPs				2.8E-01			4.2E-01			3.2E-01			3.4E-01
Total Terpenes				2.6E-01			2.4E-01			1.7E-01			2.2E-01
Production Rate (MSF 3/8 /hr)				13.9			11.5			12.8			12.7
Vol. Flow Rate (DSCFM)				7.7E+03			7.5E+03			7.5E+03			7.6E+03
Source Moisture (%)				3.9			4.0			4.2			4.0
Source Temp (°C)				42.6			41.5			40.8			41.6

ND x.xxEx = Below detection limit of x.xxEx; BP = Below practical quantitation limit; IM = Below detection limit in impinger sample; NA = Not analyzed by this method; H = CAA HAP; N = Not a HAP or VOC as defined by US EPA; TM = Start and end times for THC and speciated compounds differ; QA = Failed quality assurance; MSF = 1000 square feet; ODTH = Oven Dried Tons per Hour; AI = Analytical Interference; MLF = 1000 Linear Feet; MCF = 1000 Cubic Feet

12/9/99
9:11 AM

Table B42. Summary of Emission Test Results
Sander Baghouse, Vent (170-1SD1)

Analyte		170-1SD1N1			170-1SD1N2			170-1SD1N3			Average Emission		
			ppmVd	lb/MSF		ppmVd	lb/MSF		ppmVd	lb/MSF		ppmVd	lb/MSF
acetaldehyde	(H)	BP	8.9E-01	3.8E-03	ND	4.5E-01	3.7E-03	BP	6.1E-01	2.6E-03		5.0E-01	2.1E-03
acetone	(N)		1.1E+00	6.4E-03	BP	4.3E-01	4.6E-03	BP	5.6E-01	3.1E-03		7.1E-01	4.7E-03
acrolein	(H)	ND	3.1E-01	1.7E-03	ND	3.2E-01	3.3E-03	ND	2.8E-01	1.5E-03	ND	3.0E-01	2.2E-03
benzene	(H)	ND	8.8E-02	6.7E-04	ND	8.8E-02	1.3E-03	ND	8.2E-02	6.2E-04	ND	8.6E-02	8.6E-04
bromomethane	(H)	ND	8.8E-02	8.1E-04	ND	8.8E-02	1.6E-03	ND	8.2E-02	7.5E-04	ND	8.6E-02	1.0E-03
camphene		ND	1.8E+00	2.3E-02	ND	1.8E+00	4.5E-02	ND	1.6E+00	2.2E-02	ND	1.7E+00	3.0E-02
3-carene		ND	1.8E+00	2.3E-02	ND	1.8E+00	4.5E-02	ND	1.6E+00	2.2E-02	ND	1.7E+00	3.0E-02
chloroethane	(H)	ND	8.8E-02	5.5E-04	ND	8.8E-02	1.1E-03	ND	8.2E-02	5.1E-04	ND	8.6E-02	7.1E-04
chloroethene	(H)	ND	8.8E-02	5.3E-04	ND	8.8E-02	1.0E-03	ND	8.2E-02	4.9E-04	ND	8.6E-02	6.8E-04
cumene	(H)	ND	1.8E+00	2.0E-02	ND	1.8E+00	3.9E-02	ND	1.6E+00	1.9E-02	ND	1.7E+00	2.6E-02
p-cymene		ND	1.8E+00	2.3E-02	ND	1.8E+00	4.4E-02	ND	1.6E+00	2.1E-02	ND	1.7E+00	2.9E-02
1,2-dichloroethane	(H)	ND	8.8E-02	8.4E-04	ND	8.8E-02	1.6E-03	ND	8.2E-02	7.8E-04	ND	8.6E-02	1.1E-03
cis-1,2-dichloroethylene		ND	8.8E-02	8.3E-04	ND	8.8E-02	1.6E-03	ND	8.2E-02	7.7E-04	ND	8.6E-02	1.1E-03
formaldehyde	(H)		6.2E-01	1.8E-03	BP	4.9E-01	2.8E-03	BP	2.5E-01	7.2E-04		4.6E-01	1.8E-03
limonene		ND	1.8E+00	2.3E-02	ND	1.8E+00	4.5E-02	ND	1.6E+00	2.2E-02	ND	1.7E+00	3.0E-02
p-mentha-1,5-diene		ND	1.8E+00	2.3E-02	ND	1.8E+00	4.5E-02	ND	1.6E+00	2.2E-02	ND	1.7E+00	3.0E-02
methanol	(H)		4.4E+00	1.4E-02		2.6E+00	1.6E-02		2.7E+00	8.2E-03		3.2E+00	1.2E-02
methyl ethyl ketone (MEK)	(H)	ND	3.0E-01	2.1E-03	ND	3.1E-01	4.2E-03	ND	2.8E-01	1.9E-03	ND	3.0E-01	2.7E-03
methyl isobutyl ketone	(H)	ND	2.1E-01	2.0E-03	ND	2.2E-01	4.1E-03	ND	1.9E-01	1.9E-03	ND	2.1E-01	2.7E-03
methylene chloride	(H)	ND	8.8E-02	7.2E-04	ND	8.8E-02	1.4E-03	ND	8.2E-02	6.7E-04	ND	8.6E-02	9.3E-04
phenol	(H)	ND	3.7E-01	3.4E-03	ND	3.9E-01	6.8E-03	ND	3.4E-01	3.1E-03	ND	3.7E-01	4.4E-03
alpha-pinene			2.6E+00	3.5E-02	ND	1.8E+00	4.5E-02	ND	1.6E+00	2.2E-02		8.8E-01	1.2E-02
beta-pinene		ND	1.8E+00	2.3E-02	ND	1.8E+00	4.5E-02	ND	1.6E+00	2.2E-02	ND	1.7E+00	3.0E-02
propionaldehyde	(H)	ND	3.3E-01	1.9E-03	ND	3.5E-01	3.8E-03	ND	3.1E-01	1.7E-03	ND	3.3E-01	2.5E-03
styrene	(H)	ND	8.8E-02	8.9E-04	ND	8.8E-02	1.7E-03	ND	8.2E-02	8.2E-04	ND	8.6E-02	1.1E-03
toluene	(H)	ND	8.8E-02	7.9E-04	ND	8.8E-02	1.5E-03	ND	8.2E-02	7.3E-04	ND	8.6E-02	1.0E-03
1,2,4-trichlorobenzene	(H)	ND	8.8E-02	1.5E-03	ND	8.8E-02	3.0E-03	ND	8.2E-02	1.4E-03	ND	8.6E-02	2.0E-03
m,p-xylene	(H)	ND	8.8E-02	9.0E-04	ND	8.8E-02	1.7E-03	ND	8.2E-02	8.4E-04	ND	8.6E-02	1.2E-03
o-xylene	(H)	ND	8.8E-02	9.0E-04	ND	8.8E-02	1.7E-03	ND	8.2E-02	8.4E-04	ND	8.6E-02	1.2E-03
THC as Carbon			1.2E+02	1.4E-01		9.7E+01	2.2E-01		7.0E+01	8.1E-02		9.6E+01	1.5E-01
Total HAPs				1.9E-02			1.8E-02			1.1E-02			1.6E-02
Total Terpenes				3.5E-02			0.0E+00			0.0E+00			1.2E-02
Production Rate (MSF 3/8 /hr)				65.1			32.7			68.0			55.3
Vol. Flow Rate (DSCFM)				4.1E+04			3.9E+04			4.2E+04			4.1E+04
Source Moisture (%)				2.9			2.4			1.5			2.3
Source Temp (°C)				37.2			29.4			20.6			29.1

ND x.xxEx = Below detection limit of x.xxEx; BP = Below practical quantitation limit; IM = Below detection limit in impinger sample; NA = Not analyzed by this method; H = CAA HAP; N = Not a HAP or VOC as defined by US EPA; TM = Start and end times for THC and speciated compounds differ; QA = Failed quality assurance; MSF = 1000 square feet; ODTH = Oven Dried Tons per Hour; AI = Analytical Interference; MLF = 1000 Linear Feet; MCF = 1000 Cubic Feet

Table B43. Summary of Emission Test Results
Skinner Saw Cylone, Vent (170-XMW1)

Analyte		170-XMW1N1			170-XMW1N2			170-XMW1N3			Average Emission		
			ppmVd	lb/MSF		ppmVd	lb/MSF		ppmVd	lb/MSF		ppmVd	lb/MSF
acetaldehyde	(H)	ND	3.8E-01	1.3E-03	BP	4.0E-01	1.3E-03	ND	3.8E-01	1.6E-03		1.3E-01	4.3E-04
acetone	(N)	BP	4.5E-01	2.0E-03	BP	4.4E-01	1.9E-03	BP	3.1E-01	1.8E-03		4.0E-01	1.9E-03
acrolein	(H)	ND	2.7E-01	1.1E-03	ND	2.7E-01	1.1E-03	ND	2.7E-01	1.5E-03	ND	2.7E-01	1.2E-03
benzene	(H)	ND	7.7E-02	4.5E-04	ND	7.5E-02	4.4E-04	ND	7.5E-02	5.7E-04	ND	7.6E-02	4.9E-04
bromomethane	(H)	ND	7.7E-02	5.5E-04	ND	7.5E-02	5.3E-04	ND	7.5E-02	7.0E-04	ND	7.6E-02	5.9E-04
camphene		ND	1.5E+00	1.6E-02	ND	1.5E+00	1.5E-02	ND	1.5E+00	2.0E-02	ND	1.5E+00	1.7E-02
3-carene		ND	1.5E+00	1.6E-02	ND	1.5E+00	1.5E-02	ND	1.5E+00	2.0E-02	ND	1.5E+00	1.7E-02
chloroethane	(H)	ND	7.7E-02	3.7E-04	ND	7.5E-02	3.6E-04	ND	7.5E-02	4.7E-04	ND	7.6E-02	4.0E-04
chloroethene	(H)	ND	7.7E-02	3.6E-04	ND	7.5E-02	3.5E-04	ND	7.5E-02	4.6E-04	ND	7.6E-02	3.9E-04
cumene	(H)	ND	1.5E+00	1.4E-02	ND	1.5E+00	1.3E-02	ND	1.5E+00	1.8E-02	ND	1.5E+00	1.5E-02
p-cymene		ND	1.5E+00	1.6E-02	ND	1.5E+00	1.5E-02	ND	1.5E+00	2.0E-02	ND	1.5E+00	1.7E-02
1,2-dichloroethane	(H)	ND	7.7E-02	5.7E-04	ND	7.5E-02	5.5E-04	ND	7.5E-02	7.3E-04	ND	7.6E-02	6.2E-04
cis-1,2-dichloroethylene		ND	7.7E-02	5.6E-04	ND	7.5E-02	5.4E-04	ND	7.5E-02	7.1E-04	ND	7.6E-02	6.1E-04
formaldehyde	(H)	BP	1.5E-01	3.5E-04	BP	2.1E-01	4.6E-04	ND	1.3E-01	3.8E-04		1.2E-01	2.7E-04
limonene		ND	1.5E+00	1.6E-02	ND	1.5E+00	1.5E-02	ND	1.5E+00	2.0E-02	ND	1.5E+00	1.7E-02
p-mentha-1,5-diene		ND	1.5E+00	1.6E-02	ND	1.5E+00	1.5E-02	ND	1.5E+00	2.0E-02	ND	1.5E+00	1.7E-02
methanol	(H)		6.7E+00	1.6E-02		6.9E+00	1.7E-02	BP	1.1E+00	3.4E-03		4.9E+00	1.2E-02
methyl ethyl ketone (MEK)	(H)	ND	2.6E-01	1.4E-03	ND	2.7E-01	1.4E-03	ND	2.6E-01	1.9E-03	ND	2.6E-01	1.6E-03
methyl isobutyl ketone	(H)	ND	1.8E-01	1.4E-03	ND	1.9E-01	1.4E-03	ND	1.8E-01	1.8E-03	ND	1.8E-01	1.5E-03
methylene chloride	(H)	ND	7.7E-02	4.9E-04	ND	7.5E-02	4.8E-04	ND	7.5E-02	6.2E-04	ND	7.6E-02	5.3E-04
phenol	(H)	ND	3.2E-01	2.3E-03	ND	3.3E-01	2.3E-03	ND	3.2E-01	3.0E-03	ND	3.3E-01	2.5E-03
alpha-pinene			2.3E+00	2.4E-02		2.4E+00	2.4E-02		2.6E+00	3.5E-02		2.4E+00	2.7E-02
beta-pinene		ND	1.5E+00	1.6E-02	ND	1.5E+00	1.5E-02	ND	1.5E+00	2.0E-02	ND	1.5E+00	1.7E-02
propionaldehyde	(H)	ND	2.9E-01	1.3E-03	ND	3.0E-01	1.3E-03	ND	2.9E-01	1.7E-03	ND	2.9E-01	1.4E-03
styrene	(H)	ND	7.7E-02	6.0E-04	ND	7.5E-02	5.8E-04	ND	7.5E-02	7.7E-04	ND	7.6E-02	6.5E-04
toluene	(H)	ND	7.7E-02	5.3E-04	ND	7.5E-02	5.2E-04	ND	7.5E-02	6.8E-04	ND	7.6E-02	5.8E-04
1,2,4-trichlorobenzene	(H)	ND	7.7E-02	1.1E-03	ND	7.5E-02	1.0E-03	ND	7.5E-02	1.3E-03	ND	7.6E-02	1.1E-03
m,p-xylene	(H)	ND	7.7E-02	6.2E-04	ND	7.5E-02	6.0E-04	ND	7.5E-02	7.8E-04	ND	7.6E-02	6.6E-04
o-xylene	(H)	ND	7.7E-02	6.2E-04	ND	7.5E-02	6.0E-04	ND	7.5E-02	7.8E-04	ND	7.6E-02	6.6E-04
THC as Carbon									6.1E+01	7.2E-02		6.1E+01	7.2E-02
Total HAPs				1.6E-02			1.8E-02			3.4E-03			1.3E-02
Total Terpenes				2.4E-02			2.4E-02			3.5E-02			2.7E-02
Production Rate (MSF 3/8 /hr)				79.4			75.2			55.1			69.9
Vol. Flow Rate (DSCFM)				3.8E+04			3.6E+04			3.5E+04			3.6E+04
Source Moisture (%)				2.5			2.5			1.9			2.3
Source Temp (°C)				29.6			31.4			26.3			29.1

ND x.xxEx = Below detection limit of x.xxEx; BP = Below practical quantitation limit; IM = Below detection limit in impinger sample; NA = Not analyzed by this method; H = CAA HAP; N = Not a HAP or VOC as defined by US EPA; TM = Start and end times for THC and speciated compounds differ; QA = Failed quality assurance; MSF = 1000 square feet; ODTH = Oven Dried Tons per Hour; AI = Analytical Interference; MLF = 1000 Linear Feet; MCF = 1000 Cubic Feet

12/9/99
9:11 AM

Table B44. Summary of Emission Test Results
Softwood Veneer Dryer, RTO Inlet (170-XDV2)

Analyte		170-XDV2N1			170-XDV2N2			170-XDV2N3			Average Emission		
			ppmVd	lb/MSF		ppmVd	lb/MSF		ppmVd	lb/MSF		ppmVd	lb/MSF
acetaldehyde	(H)		3.9E+00	1.1E-02		5.9E+00	1.7E-02		7.5E+00	1.8E-02		5.8E+00	1.5E-02
acetone	(N)		2.3E+00	8.0E-03		5.0E+00	1.8E-02		5.8E+00	1.9E-02		4.3E+00	1.5E-02
acrolein	(H)	ND	2.7E-01	9.3E-04	ND	2.7E-01	9.7E-04	ND	2.8E-01	8.6E-04	ND	2.7E-01	9.2E-04
benzene	(H)	ND	7.1E-02	3.4E-04	ND	7.6E-02	3.8E-04	ND	7.7E-02	3.3E-04	ND	7.5E-02	3.5E-04
bromomethane	(H)	ND	7.1E-02	4.1E-04	ND	7.6E-02	4.6E-04	ND	7.7E-02	4.1E-04	ND	7.5E-02	4.3E-04
camphene		ND	1.4E+00	1.2E-02	ND	1.5E+00	1.3E-02	ND	1.5E+00	1.2E-02	ND	1.5E+00	1.2E-02
3-carene		ND	1.4E+00	1.2E-02	ND	1.5E+00	1.3E-02	ND	1.5E+00	1.2E-02	ND	1.5E+00	1.2E-02
chloroethane	(H)	ND	7.1E-02	2.8E-04	ND	7.6E-02	3.2E-04	ND	7.7E-02	2.8E-04	ND	7.5E-02	2.9E-04
chloroethene	(H)	ND	7.1E-02	2.7E-04	ND	7.6E-02	3.1E-04	ND	7.7E-02	2.7E-04	ND	7.5E-02	2.8E-04
cumene	(H)	ND	1.4E+00	1.0E-02	ND	1.5E+00	1.2E-02	ND	1.5E+00	1.0E-02	ND	1.5E+00	1.1E-02
p-cymene		ND	1.4E+00	1.2E-02	ND	1.5E+00	1.3E-02	ND	1.5E+00	1.1E-02	ND	1.5E+00	1.2E-02
1,2-dichloroethane	(H)	ND	7.1E-02	4.3E-04	ND	7.6E-02	4.8E-04	ND	7.7E-02	4.2E-04	ND	7.5E-02	4.5E-04
cis-1,2-dichloroethylene		ND	7.1E-02	4.2E-04	ND	7.6E-02	4.7E-04	ND	7.7E-02	4.1E-04	ND	7.5E-02	4.4E-04
formaldehyde	(H)		4.7E+00	8.6E-03		4.1E+00	7.8E-03		4.8E+00	8.1E-03		4.5E+00	8.2E-03
limonene			1.3E+01	1.1E-01		2.1E+01	1.8E-01		2.1E+01	1.6E-01		1.8E+01	1.5E-01
p-mentha-1,5-diene			2.5E+00	2.1E-02		1.8E+00	1.6E-02		1.9E+00	1.4E-02		2.1E+00	1.7E-02
methanol	(H)		1.5E+01	2.9E-02		2.0E+01	4.2E-02		3.0E+01	5.4E-02		2.2E+01	4.1E-02
methyl ethyl ketone (MEK)	(H)	ND	2.7E-01	1.2E-03	ND	2.7E-01	1.2E-03	ND	2.7E-01	1.1E-03	ND	2.7E-01	1.2E-03
methyl isobutyl ketone	(H)	ND	1.8E-01	1.1E-03	ND	1.9E-01	1.2E-03	ND	1.9E-01	1.0E-03	ND	1.9E-01	1.1E-03
methylene chloride	(H)	ND	7.1E-02	3.7E-04	ND	7.6E-02	4.2E-04	ND	7.7E-02	3.6E-04	ND	7.5E-02	3.8E-04
phenol	(H)	ND	3.3E-01	1.9E-03	ND	3.3E-01	2.0E-03	BP	4.8E-01	2.5E-03		1.6E-01	8.4E-04
alpha-pinene			3.1E+02	2.6E+00		2.6E+02	2.3E+00		1.7E+02	1.3E+00		2.5E+02	2.1E+00
beta-pinene			7.8E+01	6.5E-01		7.0E+01	6.1E-01		5.1E+01	3.9E-01		6.7E+01	5.5E-01
propionaldehyde	(H)	ND	3.0E-01	1.1E-03	ND	2.9E-01	1.1E-03	ND	3.0E-01	9.7E-04	ND	3.0E-01	1.0E-03
styrene	(H)	ND	7.1E-02	4.5E-04	ND	7.6E-02	5.1E-04	ND	7.7E-02	4.4E-04	ND	7.5E-02	4.7E-04
toluene	(H)	ND	7.1E-02	4.0E-04	ND	7.6E-02	4.5E-04	ND	7.7E-02	3.9E-04	ND	7.5E-02	4.2E-04
1,2,4-trichlorobenzene	(H)	ND	7.1E-02	7.9E-04	ND	7.6E-02	8.9E-04	ND	7.7E-02	7.7E-04	ND	7.5E-02	8.2E-04
m,p-xylene	(H)	ND	7.1E-02	4.6E-04	ND	7.6E-02	5.2E-04	ND	7.7E-02	4.5E-04	ND	7.5E-02	4.8E-04
o-xylene	(H)	ND	7.1E-02	4.6E-04	ND	7.6E-02	5.2E-04	ND	7.7E-02	4.5E-04	ND	7.5E-02	4.8E-04
THC as Carbon			6.0E+03	4.4E+00		5.6E+03	4.3E+00		3.7E+03	2.5E+00		5.1E+03	3.7E+00
Total HAPs				4.8E-02			6.6E-02			8.3E-02			6.5E-02
Total Terpenes				3.4E+00			3.1E+00			1.8E+00			2.8E+00
Production Rate (MSF 3/8 /hr)				59.8			54.1			58.5			57.5
Vol. Flow Rate (DSCFM)				2.4E+04			2.2E+04			2.1E+04			2.2E+04
Source Moisture (%)				45.0			46.5			47.9			46.5
Source Temp (°C)				166.3			165.2			166.2			165.9

ND x.xxEx = Below detection limit of x.xxEx; BP = Below practical quantitation limit; IM = Below detection limit in impinger sample; NA = Not analyzed by this method; H = CAA HAP; N = Not a HAP or VOC as defined by US EPA; TM = Start and end times for THC and speciated compounds differ; QA = Failed quality assurance; MSF = 1000 square feet; ODTH = Oven Dried Tons per Hour; AI = Analytical Interference; MLF = 1000 Linear Feet; MCF = 1000 Cubic Feet

Table B45. Summary of Emission Test Results
Softwood Veneer Dryer, RTO Outlet (170-XDV1)

Analyte		170-XDV1N1			170-XDV1N2			170-XDV1N3			Average Emission		
			ppmVd	lb/MSF		ppmVd	lb/MSF		ppmVd	lb/MSF		ppmVd	lb/MSF
acetaldehyde	(H)		1.1E+00	3.1E-03	BP	3.9E-01	1.1E-03	BP	4.6E-01	1.3E-03		6.6E-01	1.8E-03
acetone	(N)	BP	6.1E-01	2.2E-03	ND	2.8E-01	1.1E-03	BP	3.8E-01	1.4E-03		3.3E-01	1.2E-03
acrolein	(H)	ND	2.7E-01	9.3E-04	ND	2.6E-01	9.7E-04	ND	2.7E-01	9.2E-04	ND	2.6E-01	9.4E-04
benzene	(H)		1.7E-01	8.3E-04	ND	7.3E-02	3.8E-04	ND	7.5E-02	3.6E-04		5.8E-02	2.8E-04
bromomethane	(H)	ND	8.3E-02	4.9E-04	ND	7.3E-02	4.6E-04	ND	7.5E-02	4.4E-04	ND	7.7E-02	4.7E-04
camphene		ND	1.7E+00	1.4E-02	ND	1.5E+00	1.3E-02	ND	1.5E+00	1.3E-02	ND	1.5E+00	1.3E-02
3-carene		ND	1.7E+00	1.4E-02	ND	1.5E+00	1.3E-02	ND	1.5E+00	1.3E-02	ND	1.5E+00	1.3E-02
chloroethane	(H)	ND	8.3E-02	3.3E-04	ND	7.3E-02	3.2E-04	ND	7.5E-02	3.0E-04	ND	7.7E-02	3.2E-04
chloroethene	(H)	ND	8.3E-02	3.2E-04	ND	7.3E-02	3.1E-04	ND	7.5E-02	2.9E-04	ND	7.7E-02	3.1E-04
cumene	(H)	ND	1.7E+00	1.2E-02	ND	1.5E+00	1.2E-02	ND	1.5E+00	1.1E-02	ND	1.5E+00	1.2E-02
p-cymene		ND	1.7E+00	1.4E-02	ND	1.5E+00	1.3E-02	ND	1.5E+00	1.3E-02	ND	1.5E+00	1.3E-02
1,2-dichloroethane	(H)	ND	8.3E-02	5.1E-04	ND	7.3E-02	4.8E-04	ND	7.5E-02	4.6E-04	ND	7.7E-02	4.9E-04
cis-1,2-dichloroethylene		ND	8.3E-02	5.0E-04	ND	7.3E-02	4.7E-04	ND	7.5E-02	4.5E-04	ND	7.7E-02	4.8E-04
formaldehyde	(H)		7.4E-01	1.4E-03	BP	4.0E-01	8.1E-04		5.2E+00	9.7E-03		2.1E+00	4.0E-03
limonene		ND	1.7E+00	1.4E-02	ND	1.5E+00	1.3E-02	ND	1.5E+00	1.3E-02	ND	1.5E+00	1.3E-02
p-mentha-1,5-diene		ND	1.7E+00	1.4E-02	ND	1.5E+00	1.3E-02	ND	1.5E+00	1.3E-02	ND	1.5E+00	1.3E-02
methanol	(H)	BP	1.6E+00	3.2E-03	BP	7.5E-01	1.6E-03	BP	1.1E+00	2.3E-03		1.2E+00	2.4E-03
methyl ethyl ketone (MEK)	(H)	ND	2.6E-01	1.2E-03	ND	2.5E-01	1.2E-03	ND	2.6E-01	1.2E-03	ND	2.6E-01	1.2E-03
methyl isobutyl ketone	(H)	ND	1.9E-01	1.2E-03	ND	1.8E-01	1.2E-03	ND	1.8E-01	1.1E-03	ND	1.8E-01	1.2E-03
methylene chloride	(H)	ND	8.3E-02	4.4E-04	ND	7.3E-02	4.1E-04	ND	7.5E-02	4.0E-04	ND	7.7E-02	4.2E-04
phenol	(H)	ND	3.2E-01	1.9E-03	IM	3.2E-01	2.0E-03		2.7E+00	1.6E-02		1.0E+00	5.9E-03
alpha-pinene			2.6E+00	2.2E-02	ND	1.5E+00	1.3E-02		1.7E+00	1.5E-02		1.5E+00	1.2E-02
beta-pinene		ND	1.7E+00	1.4E-02	ND	1.5E+00	1.3E-02	ND	1.5E+00	1.3E-02	ND	1.5E+00	1.3E-02
propionaldehyde	(H)	ND	2.9E-01	1.0E-03	ND	2.8E-01	1.1E-03	ND	2.9E-01	1.0E-03	ND	2.9E-01	1.1E-03
styrene	(H)	ND	8.3E-02	5.4E-04	ND	7.3E-02	5.1E-04	ND	7.5E-02	4.9E-04	ND	7.7E-02	5.1E-04
toluene	(H)	ND	8.3E-02	4.8E-04	ND	7.3E-02	4.5E-04	ND	7.5E-02	4.3E-04	ND	7.7E-02	4.5E-04
1,2,4-trichlorobenzene	(H)	ND	8.3E-02	9.4E-04	ND	7.3E-02	8.9E-04	ND	7.5E-02	8.5E-04	ND	7.7E-02	8.9E-04
m,p-xylene	(H)	ND	8.3E-02	5.5E-04	ND	7.3E-02	5.2E-04	ND	7.5E-02	5.0E-04	ND	7.7E-02	5.2E-04
o-xylene	(H)	ND	8.3E-02	5.5E-04	ND	7.3E-02	5.2E-04	ND	7.5E-02	5.0E-04	ND	7.7E-02	5.2E-04
THC as Carbon			1.2E+02	8.9E-02		1.3E+02	1.0E-01		1.4E+02	1.0E-01		1.3E+02	9.9E-02
Total HAPs				8.6E-03			5.6E-03			2.9E-02			1.4E-02
Total Terpenes				2.2E-02			0.0E+00			1.5E-02			1.2E-02
Production Rate (MSF 3/8 /hr)				59.8			54.1			58.5			57.5
Vol. Flow Rate (DSCFM)				2.4E+04			2.3E+04			2.3E+04			2.3E+04
Source Moisture (%)				41.2			41.8			41.9			41.6
Source Temp (°C)				206.6			210.8			209.4			208.9

ND x.xxEx = Below detection limit of x.xxEx; BP = Below practical quantitation limit; IM = Below detection limit in impinger sample; NA = Not analyzed by this method; H = CAA HAP; N = Not a HAP or VOC as defined by US EPA; TM = Start and end times for THC and speciated compounds differ; QA = Failed quality assurance; MSF = 1000 square feet; ODTH = Oven Dried Tons per Hour; AI = Analytical Interference; MLF = 1000 Linear Feet; MCF = 1000 Cubic Feet

Table B46. Summary of Emission Test Results
Softwood Veneer Dryer, WESP Inlet, Fresh Douglas Fir Furnish (188-XDV2)

Analyte		188-XDV2N1			188-XDV2N2			188-XDV2N3			Average Emission		
			ppmVd	lb/MSF		ppmVd	lb/MSF		ppmVd	lb/MSF		ppmVd	lb/MSF
acetaldehyde	(H)		1.4E+00	9.9E-03	BP	8.9E-01	6.8E-03	BP	4.9E-01	3.7E-03		9.3E-01	6.8E-03
acetone	(N)	BP	7.2E-01	6.7E-03	BP	6.3E-01	6.3E-03	ND	3.1E-01	3.0E-03		4.5E-01	4.3E-03
acrolein	(H)	ND	2.9E-01	2.6E-03	ND	2.8E-01	2.7E-03	ND	2.8E-01	2.7E-03	ND	2.9E-01	2.7E-03
benzene	(H)	ND	8.1E-02	1.0E-03	ND	9.2E-02	1.2E-03	ND	8.1E-02	1.1E-03	ND	8.4E-02	1.1E-03
bromomethane	(H)	ND	8.1E-02	1.2E-03	ND	9.2E-02	1.5E-03	ND	8.1E-02	1.3E-03	ND	8.4E-02	1.3E-03
camphene		ND	1.6E+00	3.5E-02	ND	1.8E+00	4.3E-02	ND	1.6E+00	3.7E-02	ND	1.7E+00	3.9E-02
3-carene		ND	1.6E+00	3.5E-02	ND	1.8E+00	4.3E-02	ND	1.6E+00	3.7E-02	ND	1.7E+00	3.9E-02
chloroethane	(H)	ND	8.1E-02	8.3E-04	ND	9.2E-02	1.0E-03	ND	8.1E-02	8.8E-04	ND	8.4E-02	9.1E-04
chloroethene	(H)	ND	8.1E-02	8.1E-04	ND	9.2E-02	9.9E-04	ND	8.1E-02	8.6E-04	ND	8.4E-02	8.8E-04
cumene	(H)	ND	1.6E+00	3.1E-02	ND	1.8E+00	3.8E-02	ND	1.6E+00	3.3E-02	ND	1.7E+00	3.4E-02
p-cymene		ND	1.6E+00	3.5E-02	ND	1.8E+00	4.2E-02	ND	1.6E+00	3.7E-02	ND	1.7E+00	3.8E-02
1,2-dichloroethane	(H)	ND	8.1E-02	1.3E-03	ND	9.2E-02	1.6E-03	ND	8.1E-02	1.4E-03	ND	8.4E-02	1.4E-03
cis-1,2-dichloroethylene		ND	8.1E-02	1.3E-03	ND	9.2E-02	1.5E-03	ND	8.1E-02	1.3E-03	ND	8.4E-02	1.4E-03
formaldehyde	(H)		1.5E+00	7.3E-03		2.1E+00	1.1E-02	ND	3.7E-02	1.9E-04		1.2E+00	6.1E-03
limonene		ND	1.6E+00	3.5E-02	ND	1.8E+00	4.3E-02	ND	1.6E+00	3.7E-02	ND	1.7E+00	3.9E-02
p-mentha-1,5-diene		ND	1.6E+00	3.5E-02	ND	1.8E+00	4.3E-02	ND	1.6E+00	3.7E-02	ND	1.7E+00	3.9E-02
methanol	(H)		3.4E+00	1.7E-02		3.1E+00	1.7E-02	ND	5.2E-01	2.8E-03		2.2E+00	1.2E-02
methyl ethyl ketone (MEK)	(H)	ND	2.9E-01	3.3E-03	ND	2.8E-01	3.5E-03	ND	2.8E-01	3.4E-03	ND	2.8E-01	3.4E-03
methyl isobutyl ketone	(H)	ND	2.0E-01	3.2E-03	ND	2.0E-01	3.4E-03	ND	1.9E-01	3.3E-03	ND	2.0E-01	3.3E-03
methylene chloride	(H)	ND	8.1E-02	1.1E-03	ND	9.2E-02	1.3E-03	ND	8.1E-02	1.2E-03	ND	8.4E-02	1.2E-03
phenol	(H)	IM	3.6E-01	5.5E-03	IM	3.5E-01	5.6E-03	IM	3.5E-01	5.6E-03		3.5E-01	5.6E-03
alpha-pinene			1.0E+01	2.3E-01		9.3E+00	2.2E-01		9.6E+00	2.2E-01		9.8E+00	2.2E-01
beta-pinene		ND	1.6E+00	3.5E-02	ND	1.8E+00	4.3E-02	ND	1.6E+00	3.7E-02	ND	1.7E+00	3.9E-02
propionaldehyde	(H)	ND	3.2E-01	3.0E-03	ND	3.1E-01	3.1E-03	ND	3.1E-01	3.0E-03	ND	3.1E-01	3.0E-03
styrene	(H)	ND	8.1E-02	1.3E-03	ND	9.2E-02	1.6E-03	ND	8.1E-02	1.4E-03	ND	8.4E-02	1.5E-03
toluene	(H)	ND	8.1E-02	1.2E-03	ND	9.2E-02	1.5E-03	ND	8.1E-02	1.3E-03	ND	8.4E-02	1.3E-03
1,2,4-trichlorobenzene	(H)	ND	8.1E-02	2.3E-03	ND	9.2E-02	2.9E-03	ND	8.1E-02	2.5E-03	ND	8.4E-02	2.6E-03
m,p-xylene	(H)	ND	8.1E-02	1.4E-03	ND	9.2E-02	1.7E-03	ND	8.1E-02	1.5E-03	ND	8.4E-02	1.5E-03
o-xylene	(H)	ND	8.1E-02	1.4E-03	ND	9.2E-02	1.7E-03	ND	8.1E-02	1.5E-03	ND	8.4E-02	1.5E-03
THC as Carbon			2.6E+02	5.0E-01		2.3E+02	4.7E-01		2.5E+02	5.1E-01		2.5E+02	4.9E-01
Total HAPs				4.0E-02			4.1E-02			9.2E-03			3.0E-02
Total Terpenes				2.3E-01			2.2E-01			2.2E-01			2.2E-01
Production Rate (MSF 3/8 /hr)				33.2			30.8			31.5			31.8
Vol. Flow Rate (DSCFM)				3.4E+04			3.4E+04			3.4E+04			3.4E+04
Source Moisture (%)				19.4			19.9			19.7			19.7
Source Temp (°C)				58.9			59.4			59.4			59.3

ND x.xxEx = Below detection limit of x.xxEx; BP = Below practical quantitation limit; IM = Below detection limit in impinger sample; NA = Not analyzed by this method; H = CAA HAP; N = Not a HAP or VOC as defined by US EPA; TM = Start and end times for THC and speciated compounds differ; QA = Failed quality assurance; MSF = 1000 square feet; ODTH = Oven Dried Tons per Hour; AI = Analytical Interference; MLF = 1000 Linear Feet; MCF = 1000 Cubic Feet

Table B47. Summary of Emission Test Results
Softwood Veneer Dryer, WESP Exhaust, Fresh Douglas Fir Furnish (188-XDV1)

Analyte		188-XDV1N1			188-XDV1N2			188-XDV1N3			Average Emission		
			ppmVd	lb/MSF		ppmVd	lb/MSF		ppmVd	lb/MSF		ppmVd	lb/MSF
acetaldehyde	(H)		1.5E+00	1.1E-02		1.2E+00	9.2E-03		1.2E+00	8.8E-03		1.3E+00	9.6E-03
acetone	(N)	BP	5.4E-01	5.0E-03	BP	5.7E-01	5.7E-03	BP	5.5E-01	5.5E-03		5.5E-01	5.4E-03
acrolein	(H)	ND	2.6E-01	2.3E-03	ND	2.8E-01	2.7E-03	ND	2.7E-01	2.6E-03	ND	2.7E-01	2.6E-03
benzene	(H)	ND	7.7E-02	9.6E-04	ND	7.6E-02	1.0E-03	ND	7.9E-02	1.0E-03	ND	7.7E-02	1.0E-03
bromomethane	(H)	ND	7.7E-02	1.2E-03	ND	7.6E-02	1.2E-03	ND	7.9E-02	1.3E-03	ND	7.7E-02	1.2E-03
camphene		ND	1.5E+00	3.4E-02	ND	1.5E+00	3.6E-02	ND	1.6E+00	3.6E-02	ND	1.5E+00	3.5E-02
3-carene		ND	1.5E+00	3.4E-02	ND	1.5E+00	3.6E-02	ND	1.6E+00	3.6E-02	ND	1.5E+00	3.5E-02
chloroethane	(H)	ND	7.7E-02	7.9E-04	ND	7.6E-02	8.4E-04	ND	7.9E-02	8.6E-04	ND	7.7E-02	8.3E-04
chloroethene	(H)	ND	7.7E-02	7.7E-04	ND	7.6E-02	8.2E-04	ND	7.9E-02	8.4E-04	ND	7.7E-02	8.1E-04
cumene	(H)	ND	1.5E+00	3.0E-02	ND	1.5E+00	3.1E-02	ND	1.6E+00	3.2E-02	ND	1.5E+00	3.1E-02
p-cymene		ND	1.5E+00	3.3E-02	ND	1.5E+00	3.5E-02	ND	1.6E+00	3.6E-02	ND	1.5E+00	3.5E-02
1,2-dichloroethane	(H)	ND	7.7E-02	1.2E-03	ND	7.6E-02	1.3E-03	ND	7.9E-02	1.3E-03	ND	7.7E-02	1.3E-03
cis-1,2-dichloroethylene		ND	7.7E-02	1.2E-03	ND	7.6E-02	1.3E-03	ND	7.9E-02	1.3E-03	ND	7.7E-02	1.3E-03
formaldehyde	(H)		3.3E+00	1.6E-02		2.1E+00	1.1E-02		2.0E+00	1.0E-02		2.5E+00	1.2E-02
limonene		ND	1.5E+00	3.4E-02	ND	1.5E+00	3.6E-02	ND	1.6E+00	3.6E-02	ND	1.5E+00	3.5E-02
p-mentha-1,5-diene		ND	1.5E+00	3.4E-02	ND	1.5E+00	3.6E-02	ND	1.6E+00	3.6E-02	ND	1.5E+00	3.5E-02
methanol	(H)		2.9E+00	1.5E-02		2.9E+00	1.6E-02		3.2E+00	1.7E-02		3.0E+00	1.6E-02
methyl ethyl ketone (MEK)	(H)	ND	2.6E-01	3.0E-03	ND	2.8E-01	3.4E-03	ND	2.7E-01	3.3E-03	ND	2.7E-01	3.2E-03
methyl isobutyl ketone	(H)	ND	1.8E-01	2.9E-03	ND	1.9E-01	3.3E-03	ND	1.9E-01	3.2E-03	ND	1.9E-01	3.1E-03
methylene chloride	(H)	ND	7.7E-02	1.0E-03	ND	7.6E-02	1.1E-03	ND	7.9E-02	1.1E-03	ND	7.7E-02	1.1E-03
phenol	(H)	IM	3.2E-01	4.8E-03	IM	3.5E-01	5.7E-03	IM	3.4E-01	5.4E-03		3.4E-01	5.3E-03
alpha-pinene			1.1E+01	2.3E-01		1.1E+01	2.7E-01		1.0E+01	2.3E-01		1.1E+01	2.4E-01
beta-pinene		ND	1.5E+00	3.4E-02	ND	1.5E+00	3.6E-02	ND	1.6E+00	3.6E-02	ND	1.5E+00	3.5E-02
propionaldehyde	(H)	ND	2.8E-01	2.6E-03	ND	3.1E-01	3.1E-03	ND	3.0E-01	2.9E-03	ND	3.0E-01	2.9E-03
styrene	(H)	ND	7.7E-02	1.3E-03	ND	7.6E-02	1.4E-03	ND	7.9E-02	1.4E-03	ND	7.7E-02	1.3E-03
toluene	(H)	ND	7.7E-02	1.1E-03	ND	7.6E-02	1.2E-03	ND	7.9E-02	1.2E-03	ND	7.7E-02	1.2E-03
1,2,4-trichlorobenzene	(H)	ND	7.7E-02	2.2E-03	ND	7.6E-02	2.4E-03	ND	7.9E-02	2.4E-03	ND	7.7E-02	2.3E-03
m,p-xylene	(H)	ND	7.7E-02	1.3E-03	ND	7.6E-02	1.4E-03	ND	7.9E-02	1.4E-03	ND	7.7E-02	1.4E-03
o-xylene	(H)	ND	7.7E-02	1.3E-03	ND	7.6E-02	1.4E-03	ND	7.9E-02	1.4E-03	ND	7.7E-02	1.4E-03
THC as Carbon			2.7E+02	5.1E-01		2.4E+02	5.0E-01		2.6E+02	5.3E-01		2.6E+02	5.1E-01
Total HAPs				4.6E-02			4.2E-02			4.2E-02			4.3E-02
Total Terpenes				2.3E-01			2.7E-01			2.3E-01			2.4E-01
Production Rate (MSF 3/8 /hr)				33.2			30.8			31.5			31.8
Vol. Flow Rate (DSCFM)				3.4E+04			3.4E+04			3.4E+04			3.4E+04
Source Moisture (%)				19.4			19.9			19.7			19.7
Source Temp (°C)				58.9			59.4			59.4			59.3

ND x.xxEx = Below detection limit of x.xxEx; BP = Below practical quantitation limit; IM = Below detection limit in impinger sample; NA = Not analyzed by this method; H = CAA HAP; N = Not a HAP or VOC as defined by US EPA; TM = Start and end times for THC and speciated compounds differ; QA = Failed quality assurance; MSF = 1000 square feet; ODTH = Oven Dried Tons per Hour; AI = Analytical Interference; MLF = 1000 Linear Feet; MCF = 1000 Cubic Feet

12/9/99
9:12 AM

Table B48. Summary of Emission Test Results
Softwood Veneer Dryer, WESP Inlet, 7 Day Old Douglas Fir Furnish (188-XDV2)

Analyte		188-XDV2N4			188-XDV2N5			188-XDV2N6			Average Emission		
			ppmVd	lb/MSF		ppmVd	lb/MSF		ppmVd	lb/MSF		ppmVd	lb/MSF
acetaldehyde	(H)		2.7E+00	3.0E-02		5.1E+00	5.5E-02		5.2E+00	6.0E-02		4.3E+00	4.8E-02
acetone	(N)	BP	6.5E-01	9.6E-03	BP	6.0E-01	8.6E-03	BP	6.5E-01	9.9E-03		6.3E-01	9.3E-03
acrolein	(H)	ND	3.0E-01	4.3E-03	ND	2.9E-01	4.0E-03	ND	3.1E-01	4.5E-03	ND	3.0E-01	4.3E-03
benzene	(H)	ND	8.7E-02	1.7E-03	ND	7.4E-02	1.4E-03	ND	8.0E-02	1.6E-03	ND	8.0E-02	1.6E-03
bromomethane	(H)	ND	8.7E-02	2.1E-03	ND	7.4E-02	1.7E-03	ND	8.0E-02	2.0E-03	ND	8.0E-02	1.9E-03
camphene		ND	1.7E+00	6.0E-02	ND	1.5E+00	5.0E-02	ND	1.6E+00	5.7E-02	ND	1.6E+00	5.6E-02
3-carene		ND	1.7E+00	6.0E-02	ND	1.5E+00	5.0E-02	ND	1.6E+00	5.7E-02	ND	1.6E+00	5.6E-02
chloroethane	(H)	ND	8.7E-02	1.4E-03	ND	7.4E-02	1.2E-03	ND	8.0E-02	1.4E-03	ND	8.0E-02	1.3E-03
chloroethene	(H)	ND	8.7E-02	1.4E-03	ND	7.4E-02	1.1E-03	ND	8.0E-02	1.3E-03	ND	8.0E-02	1.3E-03
cumene	(H)	ND	1.7E+00	5.3E-02	ND	1.5E+00	4.4E-02	ND	1.6E+00	5.1E-02	ND	1.6E+00	4.9E-02
p-cymene		ND	1.7E+00	5.9E-02	ND	1.5E+00	4.9E-02	ND	1.6E+00	5.7E-02	ND	1.6E+00	5.5E-02
1,2-dichloroethane	(H)	ND	8.7E-02	2.2E-03	ND	7.4E-02	1.8E-03	ND	8.0E-02	2.1E-03	ND	8.0E-02	2.0E-03
cis-1,2-dichloroethylene		ND	8.7E-02	2.1E-03	ND	7.4E-02	1.8E-03	ND	8.0E-02	2.0E-03	ND	8.0E-02	2.0E-03
formaldehyde	(H)		2.6E+00	2.0E-02		5.9E-01	4.4E-03		3.1E+00	2.5E-02		2.1E+00	1.6E-02
limonene		ND	1.7E+00	6.0E-02	ND	1.5E+00	5.0E-02	ND	1.6E+00	5.7E-02	ND	1.6E+00	5.6E-02
p-mentha-1,5-diene		ND	1.7E+00	6.0E-02	ND	1.5E+00	5.0E-02	ND	1.6E+00	5.7E-02	ND	1.6E+00	5.6E-02
methanol	(H)		7.1E+00	5.8E-02		4.0E+00	3.1E-02		7.0E+00	5.9E-02		6.0E+00	4.9E-02
methyl ethyl ketone (MEK)	(H)	ND	3.0E-01	5.5E-03	ND	2.9E-01	5.1E-03	ND	3.0E-01	5.7E-03	ND	2.9E-01	5.4E-03
methyl isobutyl ketone	(H)	ND	2.1E-01	5.3E-03	ND	2.0E-01	4.8E-03	ND	2.1E-01	5.4E-03	ND	2.0E-01	5.2E-03
methylene chloride	(H)	ND	8.7E-02	1.9E-03	ND	7.4E-02	1.6E-03	ND	8.0E-02	1.8E-03	ND	8.0E-02	1.7E-03
phenol	(H)	IM	4.3E-01	1.0E-02	IM	3.6E-01	8.4E-03	IM	3.8E-01	9.4E-03		3.9E-01	9.3E-03
alpha-pinene			5.4E+00	1.9E-01		5.9E+00	2.0E-01		8.2E+00	2.9E-01		6.5E+00	2.3E-01
beta-pinene		ND	1.7E+00	6.0E-02	ND	1.5E+00	5.0E-02	ND	1.6E+00	5.7E-02	ND	1.6E+00	5.6E-02
propionaldehyde	(H)	ND	3.3E-01	4.9E-03	ND	3.2E-01	4.6E-03	ND	3.3E-01	5.1E-03	ND	3.3E-01	4.9E-03
styrene	(H)	ND	8.7E-02	2.3E-03	ND	7.4E-02	1.9E-03	ND	8.0E-02	2.2E-03	ND	8.0E-02	2.1E-03
toluene	(H)	ND	8.7E-02	2.0E-03	ND	7.4E-02	1.7E-03	ND	8.0E-02	1.9E-03	ND	8.0E-02	1.9E-03
1,2,4-trichlorobenzene	(H)	ND	8.7E-02	4.0E-03	ND	7.4E-02	3.3E-03	ND	8.0E-02	3.8E-03	ND	8.0E-02	3.7E-03
m,p-xylene	(H)	ND	8.7E-02	2.4E-03	ND	7.4E-02	1.9E-03	ND	8.0E-02	2.2E-03	ND	8.0E-02	2.2E-03
o-xylene	(H)	ND	8.7E-02	2.4E-03	ND	7.4E-02	1.9E-03	ND	8.0E-02	2.2E-03	ND	8.0E-02	2.2E-03
THC as Carbon			1.4E+02	4.3E-01		1.6E+02	4.7E-01		2.2E+02	6.8E-01		1.7E+02	5.3E-01
Total HAPs				1.2E-01			9.9E-02			1.5E-01			1.2E-01
Total Terpenes				1.9E-01			2.0E-01			2.9E-01			2.3E-01
Production Rate (MSF 3/8 /hr)				20.2			20.1			18.4			19.6
Vol. Flow Rate (DSCFM)				3.3E+04			3.2E+04			3.1E+04			3.2E+04
Source Moisture (%)				19.6			20.9			21.1			20.5
Source Temp (°C)				58.9			62.2			60.6			60.6

ND x.xxEx = Below detection limit of x.xxEx; BP = Below practical quantitation limit; IM = Below detection limit in impinger sample; NA = Not analyzed by this method; H = CAA HAP; N = Not a HAP or VOC as defined by US EPA; TM = Start and end times for THC and speciated compounds differ; QA = Failed quality assurance; MSF = 1000 square feet; ODTH = Oven Dried Tons per Hour; AI = Analytical Interference; MLF = 1000 Linear Feet; MCF = 1000 Cubic Feet

Table B49. Summary of Emission Test Results
Softwood Veneer Dryer, WESP Exhaust, 7 Day Old Douglas Fir Furnish (188-XDV1)

Analyte		188-XDV1N4			188-XDV1N5			188-XDV1N6			Average Emission		
			ppmVd	lb/MSF		ppmVd	lb/MSF		ppmVd	lb/MSF		ppmVd	lb/MSF
acetaldehyde	(H)		3.2E+00	3.6E-02		6.6E+00	7.1E-02		5.6E+00	6.5E-02		5.2E+00	5.8E-02
acetone	(N)	BP	5.2E-01	7.7E-03	BP	5.2E-01	7.4E-03	BP	4.6E-01	7.1E-03		5.0E-01	7.4E-03
acrolein	(H)	ND	2.6E-01	3.8E-03	ND	2.8E-01	3.8E-03	ND	2.6E-01	3.8E-03	ND	2.7E-01	3.8E-03
benzene	(H)	ND	7.7E-02	1.5E-03	ND	7.7E-02	1.5E-03	ND	7.2E-02	1.5E-03	ND	7.5E-02	1.5E-03
bromomethane	(H)	ND	7.7E-02	1.9E-03	ND	7.7E-02	1.8E-03	ND	7.2E-02	1.8E-03	ND	7.5E-02	1.8E-03
camphene		ND	1.5E+00	5.4E-02	ND	1.5E+00	5.1E-02	ND	1.4E+00	5.1E-02	ND	1.5E+00	5.2E-02
3-carene		ND	1.5E+00	5.4E-02	ND	1.5E+00	5.1E-02	ND	1.4E+00	5.1E-02	ND	1.5E+00	5.2E-02
chloroethane	(H)	ND	7.7E-02	1.3E-03	ND	7.7E-02	1.2E-03	ND	7.2E-02	1.2E-03	ND	7.5E-02	1.2E-03
chloroethene	(H)	ND	7.7E-02	1.2E-03	ND	7.7E-02	1.2E-03	ND	7.2E-02	1.2E-03	ND	7.5E-02	1.2E-03
cumene	(H)	ND	1.5E+00	4.7E-02	ND	1.5E+00	4.5E-02	ND	1.4E+00	4.5E-02	ND	1.5E+00	4.6E-02
p-cymene		ND	1.5E+00	5.3E-02	ND	1.5E+00	5.1E-02	ND	1.4E+00	5.1E-02	ND	1.5E+00	5.1E-02
1,2-dichloroethane	(H)	ND	7.7E-02	1.9E-03	ND	7.7E-02	1.9E-03	ND	7.2E-02	1.9E-03	ND	7.5E-02	1.9E-03
cis-1,2-dichloroethylene		ND	7.7E-02	1.9E-03	ND	7.7E-02	1.8E-03	ND	7.2E-02	1.8E-03	ND	7.5E-02	1.9E-03
formaldehyde	(H)		1.5E+00	1.1E-02		1.4E+00	1.0E-02		1.4E+00	1.1E-02		1.4E+00	1.1E-02
limonene		ND	1.5E+00	5.4E-02	ND	1.5E+00	5.1E-02	ND	1.4E+00	5.1E-02	ND	1.5E+00	5.2E-02
p-mentha-1,5-diene		ND	1.5E+00	5.4E-02	ND	1.5E+00	5.1E-02	ND	1.4E+00	5.1E-02	ND	1.5E+00	5.2E-02
methanol	(H)		5.8E+00	4.8E-02		6.0E+00	4.7E-02		5.0E+00	4.2E-02		5.6E+00	4.6E-02
methyl ethyl ketone (MEK)	(H)	ND	2.6E-01	4.8E-03	ND	2.7E-01	4.8E-03	ND	2.5E-01	4.8E-03	ND	2.6E-01	4.8E-03
methyl isobutyl ketone	(H)	ND	1.8E-01	4.7E-03	ND	1.9E-01	4.7E-03	ND	1.8E-01	4.6E-03	ND	1.8E-01	4.7E-03
methylene chloride	(H)	ND	7.7E-02	1.7E-03	ND	7.7E-02	1.6E-03	ND	7.2E-02	1.6E-03	ND	7.5E-02	1.6E-03
phenol	(H)	IM	3.3E-01	7.8E-03	IM	3.4E-01	7.9E-03	IM	3.2E-01	7.9E-03		3.3E-01	7.9E-03
alpha-pinene			5.0E+00	1.8E-01		5.9E+00	2.0E-01		7.0E+00	2.5E-01		6.0E+00	2.1E-01
beta-pinene		ND	1.5E+00	5.4E-02	ND	1.5E+00	5.1E-02	ND	1.4E+00	5.1E-02	ND	1.5E+00	5.2E-02
propionaldehyde	(H)	ND	2.9E-01	4.3E-03	ND	3.0E-01	4.3E-03	ND	2.8E-01	4.3E-03	ND	2.9E-01	4.3E-03
styrene	(H)	ND	7.7E-02	2.0E-03	ND	7.7E-02	2.0E-03	ND	7.2E-02	2.0E-03	ND	7.5E-02	2.0E-03
toluene	(H)	ND	7.7E-02	1.8E-03	ND	7.7E-02	1.7E-03	ND	7.2E-02	1.7E-03	ND	7.5E-02	1.8E-03
1,2,4-trichlorobenzene	(H)	ND	7.7E-02	3.6E-03	ND	7.7E-02	3.4E-03	ND	7.2E-02	3.4E-03	ND	7.5E-02	3.5E-03
m,p-xylene	(H)	ND	7.7E-02	2.1E-03	ND	7.7E-02	2.0E-03	ND	7.2E-02	2.0E-03	ND	7.5E-02	2.0E-03
o-xylene	(H)	ND	7.7E-02	2.1E-03	ND	7.7E-02	2.0E-03	ND	7.2E-02	2.0E-03	ND	7.5E-02	2.0E-03
THC as Carbon			1.5E+02	4.7E-01		1.5E+02	4.4E-01		1.9E+02	6.0E-01		1.6E+02	5.0E-01
Total HAPs				1.0E-01			1.4E-01			1.3E-01			1.2E-01
Total Terpenes				1.8E-01			2.0E-01			2.5E-01			2.1E-01
Production Rate (MSF 3/8 /hr)				20.2			20.1			18.4			19.6
Vol. Flow Rate (DSCFM)				3.3E+04			3.2E+04			3.1E+04			3.2E+04
Source Moisture (%)				19.6			20.9			21.1			20.5
Source Temp (°C)				58.9			62.2			60.6			60.6

ND x.xxEx = Below detection limit of x.xxEx; BP = Below practical quantitation limit; IM = Below detection limit in impinger sample; NA = Not analyzed by this method; H = CAA HAP; N = Not a HAP or VOC as defined by US EPA; TM = Start and end times for THC and speciated compounds differ; QA = Failed quality assurance; MSF = 1000 square feet; ODTH = Oven Dried Tons per Hour; AI = Analytical Interference; MLF = 1000 Linear Feet; MCF = 1000 Cubic Feet

12/9/99
9:12 AM

Table B50. Summary of Emission Test Results
Softwood Veneer Dryer, No. 1 Dryer Combined Exhaust at Inlet to RCO (194-1DV2)

Analyte		194-1DV2N1			194-1DV2N2			194-1DV2N3			Average Emission		
			ppmVd	lb/MSF		ppmVd	lb/MSF		ppmVd	lb/MSF		ppmVd	lb/MSF
acetaldehyde	(H)		6.7E+00	3.6E-02		7.6E+00	3.8E-02		7.3E+00	3.8E-02		7.2E+00	3.8E-02
acetone	(N)		7.2E+00	5.1E-02		9.5E+00	6.3E-02		9.8E+00	6.7E-02		8.8E+00	6.0E-02
acrolein	(H)		1.6E+00	1.1E-02		2.0E+00	1.3E-02		1.6E+00	1.1E-02		1.7E+00	1.2E-02
benzene	(H)		8.2E-01	7.9E-03		9.6E-01	8.5E-03		7.6E-01	7.0E-03		8.4E-01	7.8E-03
bromomethane	(H)	ND	7.7E-02	9.0E-04	ND	7.9E-02	8.5E-04	ND	7.9E-02	8.9E-04	ND	7.8E-02	8.8E-04
camphene		ND	1.5E+00	2.6E-02	ND	1.6E+00	2.5E-02	ND	1.6E+00	2.6E-02	ND	1.6E+00	2.5E-02
3-carene		ND	1.5E+00	2.6E-02	ND	1.6E+00	2.5E-02	ND	1.6E+00	2.6E-02	ND	1.6E+00	2.5E-02
chloroethane	(H)	ND	7.7E-02	6.1E-04	ND	7.9E-02	5.8E-04	ND	7.9E-02	6.0E-04	ND	7.8E-02	6.0E-04
chloroethene	(H)	ND	7.7E-02	5.9E-04	ND	7.9E-02	5.6E-04	ND	7.9E-02	5.9E-04	ND	7.8E-02	5.8E-04
cumene	(H)	ND	1.5E+00	2.3E-02	ND	1.6E+00	2.2E-02	ND	1.6E+00	2.3E-02	ND	1.6E+00	2.2E-02
p-cymene		ND	1.5E+00	2.6E-02	ND	1.6E+00	2.4E-02	ND	1.6E+00	2.5E-02	ND	1.6E+00	2.5E-02
1,2-dichloroethane	(H)	ND	7.7E-02	9.4E-04	ND	7.9E-02	8.9E-04	ND	7.9E-02	9.3E-04	ND	7.8E-02	9.2E-04
cis-1,2-dichloroethylene		ND	7.7E-02	9.2E-04	ND	7.9E-02	8.7E-04	ND	7.9E-02	9.1E-04	ND	7.8E-02	9.0E-04
formaldehyde	(H)		3.8E+00	1.4E-02		3.1E+01	1.1E-01		4.0E+01	1.4E-01		2.5E+01	8.7E-02
limonene			5.2E+00	8.8E-02		4.9E+00	7.6E-02		4.3E+00	6.8E-02		4.8E+00	7.7E-02
p-mentha-1,5-diene		ND	1.5E+00	2.6E-02	ND	1.6E+00	2.5E-02	ND	1.6E+00	2.6E-02	ND	1.6E+00	2.5E-02
methanol	(H)		5.1E+00	2.0E-02		9.2E+00	3.4E-02		1.4E+01	5.3E-02		9.5E+00	3.6E-02
methyl ethyl ketone (MEK)	(H)	ND	2.6E-01	2.3E-03	ND	2.7E-01	2.2E-03	ND	2.6E-01	2.2E-03	ND	2.6E-01	2.2E-03
methyl isobutyl ketone	(H)	BP	3.8E-01	4.7E-03	ND	1.9E-01	2.1E-03		3.9E-01	4.6E-03		2.6E-01	3.1E-03
methylene chloride	(H)	ND	7.7E-02	8.1E-04	ND	7.9E-02	7.6E-04	ND	7.9E-02	8.0E-04	ND	7.8E-02	7.9E-04
phenol	(H)	ND	3.2E-01	3.7E-03	ND	3.3E-01	3.5E-03		7.9E-01	8.8E-03		2.6E-01	2.9E-03
alpha-pinene			5.8E+01	9.8E-01		5.8E+01	9.0E-01		4.5E+01	7.2E-01		5.4E+01	8.6E-01
beta-pinene			2.2E+01	3.7E-01		2.4E+01	3.7E-01		1.6E+01	2.6E-01		2.1E+01	3.4E-01
propionaldehyde	(H)	ND	2.9E-01	2.1E-03	ND	3.0E-01	2.0E-03	ND	2.9E-01	2.0E-03	ND	2.9E-01	2.0E-03
styrene	(H)		9.5E-02	1.2E-03		1.1E-01	1.3E-03		8.4E-02	1.0E-03		9.6E-02	1.2E-03
toluene	(H)		7.7E-01	8.8E-03		9.1E-01	9.5E-03		8.5E-01	9.3E-03		8.4E-01	9.2E-03
1,2,4-trichlorobenzene	(H)	ND	7.7E-02	1.7E-03	ND	7.9E-02	1.6E-03	ND	7.9E-02	1.7E-03	ND	7.8E-02	1.7E-03
m,p-xylene	(H)		2.5E-01	3.3E-03		2.9E-01	3.5E-03		3.7E-01	4.7E-03		3.0E-01	3.8E-03
o-xylene	(H)	ND	7.7E-02	1.0E-03	ND	7.9E-02	9.6E-04	ND	7.9E-02	9.9E-04	ND	7.8E-02	9.9E-04
THC as Carbon			2.0E+03	3.0E+00		1.8E+03	2.5E+00		1.5E+03	2.1E+00		1.8E+03	2.5E+00
Total HAPs				1.1E-01			2.1E-01			2.8E-01			2.0E-01
Total Terpenes				1.4E+00			1.3E+00			1.1E+00			1.3E+00
Production Rate (MSF 3/8 /hr)				18.0			19.3			19.1			18.8
Vol. Flow Rate (DSCFM)				1.4E+04			1.4E+04			1.4E+04			1.4E+04
Source Moisture (%)				39.7			42.0			42.0			41.2
Source Temp (°C)				136.4			133.9			133.2			134.5

ND x.xxEx = Below detection limit of x.xxEx; BP = Below practical quantitation limit; IM = Below detection limit in impinger sample; NA = Not analyzed by this method; H = CAA HAP; N = Not a HAP or VOC as defined by US EPA; TM = Start and end times for THC and speciated compounds differ; QA = Failed quality assurance; MSF = 1000 square feet; ODTH = Oven Dried Tons per Hour; AI = Analytical Interference; MLF = 1000 Linear Feet; MCF = 1000 Cubic Feet

Table B51. Summary of Emission Test Results
Softwood Veneer Dryer, No. 1 Dryer, Veneer Cooling Section Exhaust No. 3 (194-1DV3)

Analyte		194-1DV3N1			194-1DV3N2			194-1DV3N3			Average Emission		
			ppmVd	lb/MSF		ppmVd	lb/MSF		ppmVd	lb/MSF		ppmVd	lb/MSF
acetaldehyde	(H)	BP	5.6E-01	2.4E-03	ND	4.1E-01	1.4E-03	ND	4.0E-01	2.4E-03		1.9E-01	8.1E-04
acetone	(N)	BP	6.0E-01	3.4E-03	ND	3.1E-01	1.4E-03	ND	3.1E-01	2.5E-03		2.0E-01	1.1E-03
acrolein	(H)	ND	2.7E-01	1.5E-03	ND	2.9E-01	1.3E-03	ND	2.8E-01	2.2E-03	ND	2.8E-01	1.6E-03
benzene	(H)	ND	8.2E-02	6.3E-04	ND	8.2E-02	5.0E-04	ND	7.9E-02	8.4E-04	ND	8.1E-02	6.6E-04
bromomethane	(H)	ND	8.2E-02	7.6E-04	ND	8.2E-02	6.1E-04	ND	7.9E-02	1.0E-03	ND	8.1E-02	8.0E-04
camphene		ND	1.6E+00	2.2E-02	ND	1.6E+00	1.8E-02	ND	1.6E+00	2.9E-02	ND	1.6E+00	2.3E-02
3-carene		ND	1.6E+00	2.2E-02	ND	1.6E+00	1.8E-02	ND	1.6E+00	2.9E-02	ND	1.6E+00	2.3E-02
chloroethane	(H)	ND	8.2E-02	5.2E-04	ND	8.2E-02	4.2E-04	ND	7.9E-02	7.0E-04	ND	8.1E-02	5.4E-04
chloroethene	(H)	ND	8.2E-02	5.0E-04	ND	8.2E-02	4.0E-04	ND	7.9E-02	6.7E-04	ND	8.1E-02	5.3E-04
cumene	(H)	ND	1.6E+00	1.9E-02	ND	1.6E+00	1.6E-02	ND	1.6E+00	2.6E-02	ND	1.6E+00	2.0E-02
p-cymene		ND	1.6E+00	2.2E-02	ND	1.6E+00	1.7E-02	ND	1.6E+00	2.9E-02	ND	1.6E+00	2.3E-02
1,2-dichloroethane	(H)	ND	8.2E-02	8.0E-04	ND	8.2E-02	6.4E-04	ND	7.9E-02	1.1E-03	ND	8.1E-02	8.3E-04
cis-1,2-dichloroethylene		ND	8.2E-02	7.8E-04	ND	8.2E-02	6.3E-04	ND	7.9E-02	1.0E-03	ND	8.1E-02	8.2E-04
formaldehyde	(H)		8.9E-01	2.6E-03	ND	1.4E-01	3.3E-04	ND	1.6E-01	6.6E-04		3.0E-01	8.7E-04
limonene		ND	1.6E+00	2.2E-02	ND	1.6E+00	1.8E-02	ND	1.6E+00	2.9E-02	ND	1.6E+00	2.3E-02
p-mentha-1,5-diene		ND	1.6E+00	2.2E-02	ND	1.6E+00	1.8E-02	ND	1.6E+00	2.9E-02	ND	1.6E+00	2.3E-02
methanol	(H)	BP	7.0E-01	2.2E-03	BP	6.6E-01	1.7E-03	BP	6.8E-01	3.0E-03		6.8E-01	2.3E-03
methyl ethyl ketone (MEK)	(H)	ND	2.7E-01	1.9E-03	ND	2.8E-01	1.6E-03	ND	2.8E-01	2.7E-03	ND	2.7E-01	2.1E-03
methyl isobutyl ketone	(H)	ND	1.9E-01	1.8E-03	ND	2.0E-01	1.6E-03	ND	1.9E-01	2.6E-03	ND	1.9E-01	2.0E-03
methylene chloride	(H)	ND	8.2E-02	6.8E-04	ND	8.2E-02	5.5E-04	ND	7.9E-02	9.2E-04	ND	8.1E-02	7.2E-04
phenol	(H)	BP	6.9E-01	6.3E-03	ND	3.5E-01	2.6E-03	BP	3.8E-01	5.0E-03		3.6E-01	3.8E-03
alpha-pinene		ND	1.6E+00	2.2E-02	ND	1.6E+00	1.8E-02	ND	1.6E+00	2.9E-02	ND	1.6E+00	2.3E-02
beta-pinene		ND	1.6E+00	2.2E-02	ND	1.6E+00	1.8E-02	ND	1.6E+00	2.9E-02	ND	1.6E+00	2.3E-02
propionaldehyde	(H)	ND	3.0E-01	1.7E-03	ND	3.1E-01	1.4E-03	ND	3.1E-01	2.5E-03	ND	3.1E-01	1.9E-03
styrene	(H)	ND	8.2E-02	8.4E-04	ND	8.2E-02	6.7E-04	ND	7.9E-02	1.1E-03	ND	8.1E-02	8.8E-04
toluene	(H)	ND	8.2E-02	7.4E-04	ND	8.2E-02	5.9E-04	ND	7.9E-02	9.9E-04	ND	8.1E-02	7.8E-04
1,2,4-trichlorobenzene	(H)	ND	8.2E-02	1.5E-03	ND	8.2E-02	1.2E-03	ND	7.9E-02	2.0E-03	ND	8.1E-02	1.5E-03
m,p-xylene	(H)	ND	8.2E-02	8.5E-04	ND	8.2E-02	6.9E-04	ND	7.9E-02	1.1E-03	ND	8.1E-02	8.9E-04
o-xylene	(H)	ND	8.2E-02	8.5E-04	ND	8.2E-02	6.9E-04	ND	7.9E-02	1.1E-03	ND	8.1E-02	8.9E-04
THC as Carbon		NA			NA				7.0E+00	1.2E-02		7.0E+00	1.2E-02
Total HAPs				1.4E-02			1.7E-03			7.9E-03			7.7E-03
Total Terpenes				0.0E+00			0.0E+00			0.0E+00			0.0E+00
Production Rate (MSF 3/8 /hr)				18.7			19.9			17.9			18.8
Vol. Flow Rate (DSCFM)				1.2E+04			1.0E+04			1.6E+04			1.3E+04
Source Moisture (%)				1.3			1.5			1.5			1.5
Source Temp (°C)				21.4			23.9			27.7			24.3

ND x.xxEx = Below detection limit of x.xxEx; BP = Below practical quantitation limit; IM = Below detection limit in impinger sample; NA = Not analyzed by this method; H = CAA HAP; N = Not a HAP or VOC as defined by US EPA; TM = Start and end times for THC and speciated compounds differ; QA = Failed quality assurance; MSF = 1000 square feet; ODTH = Oven Dried Tons per Hour; AI = Analytical Interference; MLF = 1000 Linear Feet; MCF = 1000 Cubic Feet

12/9/99
9:12 AM

Table B52. Summary of Emission Test Results
Softwood Veneer Dryer, No. 1 Dryer, Veneer Cooling Section Exhaust No. 2 (194-1DV4)

Analyte		194-1DV4N1			194-1DV4N2			194-1DV4N3			Average Emission		
			ppmVd	lb/MSF		ppmVd	lb/MSF		ppmVd	lb/MSF		ppmVd	lb/MSF
acetaldehyde	(H)	ND	4.3E-01	1.8E-03	ND	3.8E-01	1.4E-03	ND	4.5E-01	2.5E-03	ND	4.2E-01	1.9E-03
acetone	(N)	ND	3.3E-01	1.8E-03	ND	2.9E-01	1.4E-03	ND	3.4E-01	2.5E-03	ND	3.2E-01	1.9E-03
acrolein	(H)	ND	3.0E-01	1.6E-03	ND	2.7E-01	1.3E-03	ND	3.1E-01	2.2E-03	ND	2.9E-01	1.7E-03
benzene	(H)	ND	7.1E-02	5.3E-04	ND	7.8E-02	5.1E-04	ND	7.5E-02	7.5E-04	ND	7.5E-02	6.0E-04
bromomethane	(H)	ND	7.1E-02	6.5E-04	ND	7.8E-02	6.2E-04	ND	7.5E-02	9.2E-04	ND	7.5E-02	7.3E-04
camphene		ND	1.4E+00	1.9E-02	ND	1.6E+00	1.8E-02	ND	1.5E+00	2.6E-02	ND	1.5E+00	2.1E-02
3-carene		ND	1.4E+00	1.9E-02	ND	1.6E+00	1.8E-02	ND	1.5E+00	2.6E-02	ND	1.5E+00	2.1E-02
chloroethane	(H)	ND	7.1E-02	4.4E-04	ND	7.8E-02	4.2E-04	ND	7.5E-02	6.2E-04	ND	7.5E-02	4.9E-04
chloroethene	(H)	ND	7.1E-02	4.3E-04	ND	7.8E-02	4.1E-04	ND	7.5E-02	6.0E-04	ND	7.5E-02	4.8E-04
cumene	(H)	ND	1.4E+00	1.6E-02	ND	1.6E+00	1.6E-02	ND	1.5E+00	2.3E-02	ND	1.5E+00	1.8E-02
p-cymene		ND	1.4E+00	1.8E-02	ND	1.6E+00	1.8E-02	ND	1.5E+00	2.6E-02	ND	1.5E+00	2.1E-02
1,2-dichloroethane	(H)	ND	7.1E-02	6.7E-04	ND	7.8E-02	6.5E-04	ND	7.5E-02	9.5E-04	ND	7.5E-02	7.6E-04
cis-1,2-dichloroethylene		ND	7.1E-02	6.6E-04	ND	7.8E-02	6.3E-04	ND	7.5E-02	9.4E-04	ND	7.5E-02	7.4E-04
formaldehyde	(H)	ND	1.4E-01	4.1E-04	ND	1.2E-01	3.1E-04	ND	1.5E-01	5.7E-04	ND	1.4E-01	4.3E-04
limonene		ND	1.4E+00	1.9E-02	ND	1.6E+00	1.8E-02	ND	1.5E+00	2.6E-02	ND	1.5E+00	2.1E-02
p-mentha-1,5-diene		ND	1.4E+00	1.9E-02	ND	1.6E+00	1.8E-02	ND	1.5E+00	2.6E-02	ND	1.5E+00	2.1E-02
methanol	(H)	ND	5.7E-01	1.7E-03	BP	6.0E-01	1.6E-03	BP	6.1E-01	2.5E-03		4.0E-01	1.4E-03
methyl ethyl ketone (MEK)	(H)	ND	2.9E-01	2.0E-03	ND	2.6E-01	1.6E-03	ND	3.0E-01	2.8E-03	ND	2.9E-01	2.1E-03
methyl isobutyl ketone	(H)	ND	2.0E-01	1.9E-03	ND	1.8E-01	1.6E-03	ND	2.1E-01	2.7E-03	ND	2.0E-01	2.0E-03
methylene chloride	(H)	ND	7.1E-02	5.8E-04	ND	7.8E-02	5.5E-04	ND	7.5E-02	8.2E-04	ND	7.5E-02	6.5E-04
phenol	(H)	ND	3.6E-01	3.3E-03	ND	3.2E-01	2.6E-03	IM	4.9E-01	5.9E-03		1.6E-01	2.0E-03
alpha-pinene		ND	1.4E+00	1.9E-02	ND	1.6E+00	1.8E-02	ND	1.5E+00	2.6E-02	ND	1.5E+00	2.1E-02
beta-pinene		ND	1.4E+00	1.9E-02	ND	1.6E+00	1.8E-02	ND	1.5E+00	2.6E-02	ND	1.5E+00	2.1E-02
propionaldehyde	(H)	ND	3.3E-01	1.8E-03	ND	2.9E-01	1.4E-03	ND	3.4E-01	2.5E-03	ND	3.2E-01	1.9E-03
styrene	(H)	ND	7.1E-02	7.1E-04	ND	7.8E-02	6.8E-04	ND	7.5E-02	1.0E-03	ND	7.5E-02	8.0E-04
toluene	(H)	ND	7.1E-02	6.3E-04	ND	7.8E-02	6.0E-04	ND	7.5E-02	8.9E-04	ND	7.5E-02	7.1E-04
1,2,4-trichlorobenzene	(H)	ND	7.1E-02	1.2E-03	ND	7.8E-02	1.2E-03	ND	7.5E-02	1.8E-03	ND	7.5E-02	1.4E-03
m,p-xylene	(H)	ND	7.1E-02	7.2E-04	ND	7.8E-02	6.9E-04	ND	7.5E-02	1.0E-03	ND	7.5E-02	8.1E-04
o-xylene	(H)	ND	7.1E-02	7.2E-04	ND	7.8E-02	6.9E-04	ND	7.5E-02	1.0E-03	ND	7.5E-02	8.1E-04
THC as Carbon			1.4E+01	1.6E-02		7.3E+00	7.4E-03	NA				1.1E+01	1.2E-02
Total HAPs				0.0E+00			1.6E-03			8.4E-03			3.3E-03
Total Terpenes				0.0E+00			0.0E+00			0.0E+00			0.0E+00
Production Rate (MSF 3/8 /hr)				18.7			19.9			17.9			18.8
Vol. Flow Rate (DSCFM)				1.2E+04			1.1E+04			1.5E+04			1.2E+04
Source Moisture (%)				1.3			1.4			1.6			1.4
Source Temp (°C)				29.4			30.5			29.2			29.7

ND x.xxEx = Below detection limit of x.xxEx; BP = Below practical quantitation limit; IM = Below detection limit in impinger sample; NA = Not analyzed by this method; H = CAA HAP; N = Not a HAP or VOC as defined by US EPA; TM = Start and end times for THC and speciated compounds differ; QA = Failed quality assurance; MSF = 1000 square feet; ODTH = Oven Dried Tons per Hour; AI = Analytical Interference; MLF = 1000 Linear Feet; MCF = 1000 Cubic Feet

Table B53. Summary of Emission Test Results
Softwood Veneer Dryer, No. 1 Dryer, Veneer Cooling Section Exhaust No. 1 (194-1DV5)

Analyte		194-1DV5N1			194-1DV5N2			194-1DV5N3			Average Emission		
			ppmVd	lb/MSF		ppmVd	lb/MSF		ppmVd	lb/MSF		ppmVd	lb/MSF
acetaldehyde	(H)	ND	4.2E-01	1.7E-03	ND	4.4E-01	1.5E-03	ND	4.5E-01	2.6E-03	ND	4.4E-01	2.0E-03
acetone	(N)	BP	3.5E-01	1.9E-03	ND	3.4E-01	1.5E-03	ND	3.4E-01	2.7E-03		1.2E-01	6.2E-04
acrolein	(H)	ND	2.9E-01	1.5E-03	ND	3.1E-01	1.4E-03	ND	3.2E-01	2.3E-03	ND	3.1E-01	1.7E-03
benzene	(H)	ND	7.6E-02	5.5E-04	ND	8.4E-02	5.2E-04	ND	9.2E-02	9.5E-04	ND	8.4E-02	6.7E-04
bromomethane	(H)	ND	7.6E-02	6.7E-04	ND	8.4E-02	6.3E-04	ND	9.2E-02	1.2E-03	ND	8.4E-02	8.2E-04
camphene		ND	1.5E+00	1.9E-02	ND	1.7E+00	1.8E-02	ND	1.8E+00	3.3E-02	ND	1.7E+00	2.3E-02
3-carene		ND	1.5E+00	1.9E-02	ND	1.7E+00	1.8E-02	ND	1.8E+00	3.3E-02	ND	1.7E+00	2.3E-02
chloroethane	(H)	ND	7.6E-02	4.5E-04	ND	8.4E-02	4.3E-04	ND	9.2E-02	7.9E-04	ND	8.4E-02	5.6E-04
chloroethene	(H)	ND	7.6E-02	4.4E-04	ND	8.4E-02	4.2E-04	ND	9.2E-02	7.6E-04	ND	8.4E-02	5.4E-04
cumene	(H)	ND	1.5E+00	1.7E-02	ND	1.7E+00	1.6E-02	ND	1.8E+00	2.9E-02	ND	1.7E+00	2.1E-02
p-cymene		ND	1.5E+00	1.9E-02	ND	1.7E+00	1.8E-02	ND	1.8E+00	3.3E-02	ND	1.7E+00	2.3E-02
1,2-dichloroethane	(H)	ND	7.6E-02	6.9E-04	ND	8.4E-02	6.6E-04	ND	9.2E-02	1.2E-03	ND	8.4E-02	8.5E-04
cis-1,2-dichloroethylene		ND	7.6E-02	6.8E-04	ND	8.4E-02	6.5E-04	ND	9.2E-02	1.2E-03	ND	8.4E-02	8.4E-04
formaldehyde	(H)	ND	1.5E-01	4.2E-04	ND	1.4E-01	3.4E-04	ND	1.5E-01	6.1E-04	ND	1.5E-01	4.5E-04
limonene		ND	1.5E+00	1.9E-02	ND	1.7E+00	1.8E-02	ND	1.8E+00	3.3E-02	ND	1.7E+00	2.3E-02
p-mentha-1,5-diene		ND	1.5E+00	1.9E-02	ND	1.7E+00	1.8E-02	ND	1.8E+00	3.3E-02	ND	1.7E+00	2.3E-02
methanol	(H)	BP	8.7E-01	2.5E-03	BP	5.8E-01	1.5E-03	ND	5.8E-01	2.5E-03		4.8E-01	1.3E-03
methyl ethyl ketone (MEK)	(H)	ND	2.9E-01	1.9E-03	ND	3.0E-01	1.7E-03	ND	3.1E-01	3.0E-03	ND	3.0E-01	2.2E-03
methyl isobutyl ketone	(H)	ND	2.0E-01	1.8E-03	ND	2.1E-01	1.7E-03	ND	2.2E-01	2.9E-03	ND	2.1E-01	2.1E-03
methylene chloride	(H)	ND	7.6E-02	6.0E-04	ND	8.4E-02	5.7E-04	ND	9.2E-02	1.0E-03	ND	8.4E-02	7.3E-04
phenol	(H)	ND	3.5E-01	3.1E-03	ND	3.7E-01	2.8E-03	BP	4.9E-01	6.1E-03		1.6E-01	2.0E-03
alpha-pinene		ND	1.5E+00	1.9E-02	ND	1.7E+00	1.8E-02	ND	1.8E+00	3.3E-02	ND	1.7E+00	2.3E-02
beta-pinene		ND	1.5E+00	1.9E-02	ND	1.7E+00	1.8E-02	ND	1.8E+00	3.3E-02	ND	1.7E+00	2.3E-02
propionaldehyde	(H)	ND	3.2E-01	1.7E-03	ND	3.4E-01	1.5E-03	ND	3.4E-01	2.7E-03	ND	3.3E-01	2.0E-03
styrene	(H)	ND	7.6E-02	7.3E-04	ND	8.4E-02	6.9E-04	ND	9.2E-02	1.3E-03	ND	8.4E-02	9.0E-04
toluene	(H)	ND	7.6E-02	6.5E-04	ND	8.4E-02	6.1E-04	ND	9.2E-02	1.1E-03	ND	8.4E-02	7.9E-04
1,2,4-trichlorobenzene	(H)	ND	7.6E-02	1.3E-03	ND	8.4E-02	1.2E-03	ND	9.2E-02	2.2E-03	ND	8.4E-02	1.6E-03
m,p-xylene	(H)	ND	7.6E-02	7.4E-04	ND	8.4E-02	7.1E-04	ND	9.2E-02	1.3E-03	ND	8.4E-02	9.2E-04
o-xylene	(H)	ND	7.6E-02	7.4E-04	ND	8.4E-02	7.1E-04	ND	9.2E-02	1.3E-03	ND	8.4E-02	9.2E-04
THC as Carbon			1.8E+01	2.0E-02		8.8E+00	8.4E-03		1.0E+01	1.6E-02		1.2E+01	1.5E-02
Total HAPs				2.5E-03			1.5E-03			6.1E-03			3.4E-03
Total Terpenes				0.0E+00			0.0E+00			0.0E+00			0.0E+00
Production Rate (MSF 3/8 /hr)				18.7			19.9			17.9			18.8
Vol. Flow Rate (DSCFM)				1.1E+04			1.0E+04			1.5E+04			1.2E+04
Source Moisture (%)				1.4			1.4			1.5			1.4
Source Temp (°C)				35.5			36.4			38.7			36.9

ND x.xxEx = Below detection limit of x.xxEx; BP = Below practical quantitation limit; IM = Below detection limit in impinger sample; NA = Not analyzed by this method; H = CAA HAP; N = Not a HAP or VOC as defined by US EPA; TM = Start and end times for THC and speciated compounds differ; QA = Failed quality assurance; MSF = 1000 square feet; ODTH = Oven Dried Tons per Hour; AI = Analytical Interference; MLF = 1000 Linear Feet; MCF = 1000 Cubic Feet

12/9/99
9:12 AM

Table B54. Summary of Emission Test Results
Softwood Veneer Dryer, No. 2 Dryer, Combined Exhaust at Inlet to RCO (194-2DV2)

Analyte		194-2DV2N1			194-2DV2N2			194-2DV2N3			Average Emission		
			ppmVd	lb/MSF		ppmVd	lb/MSF		ppmVd	lb/MSF		ppmVd	lb/MSF
acetaldehyde	(H)		2.2E+00	1.0E-02		2.1E+00	1.1E-02		2.9E+00	1.4E-02		2.4E+00	1.2E-02
acetone	(N)		1.9E+00	1.2E-02	ND	3.1E-01	2.0E-03		2.1E+00	1.3E-02		1.3E+00	8.4E-03
acrolein	(H)	BP	2.7E-01	1.6E-03	AI			BP	4.7E-01	2.9E-03		3.7E-01	2.2E-03
benzene	(H)	ND	7.5E-02	6.2E-04	ND	8.0E-02	7.1E-04	ND	7.9E-02	6.8E-04	ND	7.8E-02	6.7E-04
bromomethane	(H)	ND	7.5E-02	7.5E-04	ND	8.0E-02	8.6E-04	ND	7.9E-02	8.2E-04	ND	7.8E-02	8.1E-04
camphene		ND	1.5E+00	2.1E-02	ND	1.6E+00	2.5E-02	ND	1.6E+00	2.4E-02	ND	1.6E+00	2.3E-02
3-carene		ND	1.5E+00	2.1E-02	ND	1.6E+00	2.5E-02	ND	1.6E+00	2.4E-02	ND	1.6E+00	2.3E-02
chloroethane	(H)	ND	7.5E-02	5.1E-04	ND	8.0E-02	5.8E-04	ND	7.9E-02	5.6E-04	ND	7.8E-02	5.5E-04
chloroethene	(H)	ND	7.5E-02	4.9E-04	ND	8.0E-02	5.7E-04	ND	7.9E-02	5.4E-04	ND	7.8E-02	5.3E-04
cumene	(H)	ND	1.5E+00	1.9E-02	ND	1.6E+00	2.2E-02	ND	1.6E+00	2.1E-02	ND	1.6E+00	2.1E-02
p-cymene		ND	1.5E+00	2.1E-02	ND	1.6E+00	2.4E-02	ND	1.6E+00	2.3E-02	ND	1.6E+00	2.3E-02
1,2-dichloroethane	(H)	ND	7.5E-02	7.8E-04	ND	8.0E-02	9.0E-04	ND	7.9E-02	8.6E-04	ND	7.8E-02	8.4E-04
cis-1,2-dichloroethylene		ND	7.5E-02	7.6E-04	ND	8.0E-02	8.8E-04	ND	7.9E-02	8.4E-04	ND	7.8E-02	8.3E-04
formaldehyde	(H)		2.9E+00	9.0E-03		2.7E+00	9.3E-03		2.0E+00	6.5E-03		2.5E+00	8.3E-03
limonene			2.2E+00	3.2E-02		2.1E+00	3.2E-02		1.8E+00	2.7E-02		2.0E+00	3.0E-02
p-mentha-1,5-diene		ND	1.5E+00	2.1E-02	ND	1.6E+00	2.5E-02	ND	1.6E+00	2.4E-02	ND	1.6E+00	2.3E-02
methanol	(H)		1.0E+01	3.4E-02		1.5E+01	5.4E-02		9.6E+00	3.4E-02		1.2E+01	4.1E-02
methyl ethyl ketone (MEK)	(H)	ND	2.6E-01	2.0E-03	ND	2.8E-01	2.3E-03	ND	2.7E-01	2.1E-03	ND	2.7E-01	2.1E-03
methyl isobutyl ketone	(H)	ND	1.8E-01	1.9E-03	ND	1.9E-01	2.2E-03	ND	1.9E-01	2.0E-03	ND	1.9E-01	2.1E-03
methylene chloride	(H)	ND	7.5E-02	6.7E-04	ND	8.0E-02	7.7E-04	ND	7.9E-02	7.3E-04	ND	7.8E-02	7.2E-04
phenol	(H)	BP	6.4E-01	6.3E-03	IM	3.9E-01	4.2E-03	ND	3.3E-01	3.4E-03		3.4E-01	3.5E-03
alpha-pinene			7.0E+01	1.0E+00		6.1E+01	9.3E-01		5.0E+01	7.4E-01		6.0E+01	8.9E-01
beta-pinene			2.5E+01	3.5E-01		2.4E+01	3.6E-01		1.8E+01	2.7E-01		2.2E+01	3.3E-01
propionaldehyde	(H)	ND	2.9E-01	1.8E-03	ND	3.1E-01	2.0E-03	ND	2.9E-01	1.9E-03	ND	3.0E-01	1.9E-03
styrene	(H)	ND	7.5E-02	8.2E-04	ND	8.0E-02	9.4E-04	ND	7.9E-02	9.0E-04	ND	7.8E-02	8.9E-04
toluene	(H)	ND	7.5E-02	7.3E-04	ND	8.0E-02	8.3E-04	ND	7.9E-02	8.0E-04	ND	7.8E-02	7.9E-04
1,2,4-trichlorobenzene	(H)	ND	7.5E-02	1.4E-03	ND	8.0E-02	1.6E-03	ND	7.9E-02	1.6E-03	ND	7.8E-02	1.5E-03
m,p-xylene	(H)	ND	7.5E-02	8.4E-04	ND	8.0E-02	9.6E-04	ND	7.9E-02	9.2E-04	ND	7.8E-02	9.1E-04
o-xylene	(H)	ND	7.5E-02	8.4E-04	ND	8.0E-02	9.6E-04	ND	7.9E-02	9.2E-04	ND	7.8E-02	9.1E-04
THC as Carbon			1.4E+03	1.7E+00		1.4E+03	1.9E+00		6.8E+02	8.9E-01		1.2E+03	1.5E+00
Total HAPs				6.2E-02			7.8E-02			5.7E-02			6.6E-02
Total Terpenes				1.4E+00			1.3E+00			1.0E+00			1.2E+00
Production Rate (MSF 3/8 /hr)				11.6			11.1			11.8			11.5
Vol. Flow Rate (DSCFM)				7.8E+03			8.0E+03			8.3E+03			8.0E+03
Source Moisture (%)				32.5			31.3			33.6			32.5
Source Temp (°C)				163.4			163.2			162.5			163.0

ND x.xxEx = Below detection limit of x.xxEx; BP = Below practical quantitation limit; IM = Below detection limit in impinger sample; NA = Not analyzed by this method; H = CAA HAP; N = Not a HAP or VOC as defined by US EPA; TM = Start and end times for THC and speciated compounds differ; QA = Failed quality assurance; MSF = 1000 square feet; ODTH = Oven Dried Tons per Hour; AI = Analytical Interference; MLF = 1000 Linear Feet; MCF = 1000 Cubic Feet

Table B55. Summary of Emission Test Results
Softwood Veneer Dryer, No. 2 Dryer, Veneer Cooling Section Exhaust No. 2 (194-2DV3)

Analyte		194-2DV3N1			194-2DV3N2			194-2DV3N3			Average Emission		
			ppmVd	lb/MSF		ppmVd	lb/MSF		ppmVd	lb/MSF		ppmVd	lb/MSF
acetaldehyde	(H)	ND	3.8E-01	3.2E-03	ND	3.9E-01	3.0E-03	ND	4.7E-01	7.9E-03	ND	4.1E-01	4.7E-03
acetone	(N)	IM	3.0E-01	3.3E-03	ND	3.0E-01	3.0E-03	ND	3.6E-01	8.0E-03		9.9E-02	1.1E-03
acrolein	(H)	ND	2.7E-01	2.8E-03	ND	2.8E-01	2.7E-03	ND	3.3E-01	7.0E-03	ND	2.9E-01	4.2E-03
benzene	(H)	ND	8.0E-02	1.2E-03	ND	8.4E-02	1.1E-03	ND	8.9E-02	2.6E-03	ND	8.4E-02	1.7E-03
bromomethane	(H)	ND	8.0E-02	1.4E-03	ND	8.4E-02	1.4E-03	ND	8.9E-02	3.2E-03	ND	8.4E-02	2.0E-03
camphene		ND	1.6E+00	4.1E-02	ND	1.7E+00	4.0E-02	ND	1.8E+00	9.2E-02	ND	1.7E+00	5.8E-02
3-carene		ND	1.6E+00	4.1E-02	ND	1.7E+00	4.0E-02	ND	1.8E+00	9.2E-02	ND	1.7E+00	5.8E-02
chloroethane	(H)	ND	8.0E-02	9.7E-04	ND	8.4E-02	9.4E-04	ND	8.9E-02	2.2E-03	ND	8.4E-02	1.4E-03
chloroethene	(H)	ND	8.0E-02	9.4E-04	ND	8.4E-02	9.1E-04	ND	8.9E-02	2.1E-03	ND	8.4E-02	1.3E-03
cumene	(H)	ND	1.6E+00	3.6E-02	ND	1.7E+00	3.5E-02	ND	1.8E+00	8.1E-02	ND	1.7E+00	5.1E-02
p-cymene		ND	1.6E+00	4.0E-02	ND	1.7E+00	3.9E-02	ND	1.8E+00	9.1E-02	ND	1.7E+00	5.7E-02
1,2-dichloroethane	(H)	ND	8.0E-02	1.5E-03	ND	8.4E-02	1.4E-03	ND	8.9E-02	3.3E-03	ND	8.4E-02	2.1E-03
cis-1,2-dichloroethylene		ND	8.0E-02	1.5E-03	ND	8.4E-02	1.4E-03	ND	8.9E-02	3.3E-03	ND	8.4E-02	2.1E-03
formaldehyde	(H)	ND	1.2E-01	7.1E-04	ND	1.2E-01	6.4E-04	ND	1.5E-01	1.8E-03	ND	1.3E-01	1.0E-03
limonene		ND	1.6E+00	4.1E-02	ND	1.7E+00	4.0E-02	ND	1.8E+00	9.2E-02	ND	1.7E+00	5.8E-02
p-mentha-1,5-diene		ND	1.6E+00	4.1E-02	ND	1.7E+00	4.0E-02	ND	1.8E+00	9.2E-02	ND	1.7E+00	5.8E-02
methanol	(H)	BP	7.1E-01	4.3E-03		2.0E+00	1.1E-02		2.0E+00	2.5E-02		1.6E+00	1.3E-02
methyl ethyl ketone (MEK)	(H)	ND	2.6E-01	3.6E-03	ND	2.7E-01	3.4E-03	ND	3.2E-01	8.9E-03	ND	2.9E-01	5.3E-03
methyl isobutyl ketone	(H)	ND	1.9E-01	3.5E-03	ND	1.9E-01	3.3E-03	ND	2.2E-01	8.5E-03	ND	2.0E-01	5.1E-03
methylene chloride	(H)	ND	8.0E-02	1.3E-03	ND	8.4E-02	1.2E-03	ND	8.9E-02	2.9E-03	ND	8.4E-02	1.8E-03
phenol	(H)	ND	3.2E-01	5.8E-03	ND	3.3E-01	5.4E-03	ND	4.0E-01	1.4E-02	ND	3.5E-01	8.5E-03
alpha-pinene		ND	1.6E+00	4.1E-02	ND	1.7E+00	4.0E-02	ND	1.8E+00	9.2E-02	ND	1.7E+00	5.8E-02
beta-pinene		ND	1.6E+00	4.1E-02	ND	1.7E+00	4.0E-02	ND	1.8E+00	9.2E-02	ND	1.7E+00	5.8E-02
propionaldehyde	(H)	ND	2.9E-01	3.2E-03	ND	3.0E-01	3.0E-03	ND	3.6E-01	8.0E-03	ND	3.2E-01	4.7E-03
styrene	(H)	ND	8.0E-02	1.6E-03	ND	8.4E-02	1.5E-03	ND	8.9E-02	3.5E-03	ND	8.4E-02	2.2E-03
toluene	(H)	ND	8.0E-02	1.4E-03	ND	8.4E-02	1.3E-03	ND	8.9E-02	3.1E-03	ND	8.4E-02	1.9E-03
1,2,4-trichlorobenzene	(H)	ND	8.0E-02	2.7E-03	ND	8.4E-02	2.7E-03	ND	8.9E-02	6.1E-03	ND	8.4E-02	3.8E-03
m,p-xylene	(H)	ND	8.0E-02	1.6E-03	ND	8.4E-02	1.6E-03	ND	8.9E-02	3.6E-03	ND	8.4E-02	2.2E-03
o-xylene	(H)	ND	8.0E-02	1.6E-03	ND	8.4E-02	1.6E-03	ND	8.9E-02	3.6E-03	ND	8.4E-02	2.2E-03
THC as Carbon		NA			NA			NA					
Total HAPs				4.3E-03			1.1E-02			2.5E-02			1.3E-02
Total Terpenes				0.0E+00			0.0E+00			0.0E+00			0.0E+00
Production Rate (MSF 3/8 /hr)				12.2			12.1			7.6			10.6
Vol. Flow Rate (DSCFM)				1.5E+04			1.4E+04			1.9E+04			1.6E+04
Source Moisture (%)				1.2			1.2			1.2			1.2
Source Temp (°C)				31.0			30.9			26.1			29.3

ND x.xxEx = Below detection limit of x.xxEx; BP = Below practical quantitation limit; IM = Below detection limit in impinger sample; NA = Not analyzed by this method; H = CAA HAP; N = Not a HAP or VOC as defined by US EPA; TM = Start and end times for THC and speciated compounds differ; QA = Failed quality assurance; MSF = 1000 square feet; ODTH = Oven Dried Tons per Hour; AI = Analytical Interference; MLF = 1000 Linear Feet; MCF = 1000 Cubic Feet

12/9/99
9:12 AM

Table B56. Summary of Emission Test Results
Softwood Veneer Dryer, No. 2 Dryer, Veneer Cooling Section Exhaust No. 1 (194-2DV4)

Analyte		194-2DV4N1			194-2DV4N2			194-2DV4N3			Average Emission		
			ppmVd	lb/MSF		ppmVd	lb/MSF		ppmVd	lb/MSF		ppmVd	lb/MSF
acetaldehyde	(H)	ND	4.5E-01	3.8E-03	ND	3.7E-01	2.8E-03	ND	5.2E-01	7.8E-03	ND	4.5E-01	4.8E-03
acetone	(N)	ND	3.4E-01	3.8E-03	ND	2.8E-01	2.9E-03	ND	3.9E-01	7.8E-03	ND	3.4E-01	4.8E-03
acrolein	(H)	ND	3.1E-01	3.3E-03	ND	2.6E-01	2.5E-03	ND	3.5E-01	6.9E-03	ND	3.1E-01	4.2E-03
benzene	(H)	ND	8.0E-02	1.2E-03	ND	7.6E-02	1.0E-03	ND	8.2E-02	2.2E-03	ND	7.9E-02	1.5E-03
bromomethane	(H)	ND	8.0E-02	1.4E-03	ND	7.6E-02	1.3E-03	ND	8.2E-02	2.7E-03	ND	7.9E-02	1.8E-03
camphene		ND	1.6E+00	4.1E-02	ND	1.5E+00	3.6E-02	ND	1.6E+00	7.7E-02	ND	1.6E+00	5.1E-02
3-carene		ND	1.6E+00	4.1E-02	ND	1.5E+00	3.6E-02	ND	1.6E+00	7.7E-02	ND	1.6E+00	5.1E-02
chloroethane	(H)	ND	8.0E-02	9.7E-04	ND	7.6E-02	8.5E-04	ND	8.2E-02	1.8E-03	ND	7.9E-02	1.2E-03
chloroethene	(H)	ND	8.0E-02	9.4E-04	ND	7.6E-02	8.3E-04	ND	8.2E-02	1.8E-03	ND	7.9E-02	1.2E-03
cumene	(H)	ND	1.6E+00	3.6E-02	ND	1.5E+00	3.2E-02	ND	1.6E+00	6.8E-02	ND	1.6E+00	4.5E-02
p-cymene		ND	1.6E+00	4.0E-02	ND	1.5E+00	3.6E-02	ND	1.6E+00	7.6E-02	ND	1.6E+00	5.1E-02
1,2-dichloroethane	(H)	ND	8.0E-02	1.5E-03	ND	7.6E-02	1.3E-03	ND	8.2E-02	2.8E-03	ND	7.9E-02	1.9E-03
cis-1,2-dichloroethylene		ND	8.0E-02	1.5E-03	ND	7.6E-02	1.3E-03	ND	8.2E-02	2.7E-03	ND	7.9E-02	1.8E-03
formaldehyde	(H)	ND	1.5E-01	8.5E-04	ND	1.2E-01	6.2E-04	ND	1.8E-01	1.9E-03	ND	1.5E-01	1.1E-03
limonene		ND	1.6E+00	4.1E-02	ND	1.5E+00	3.6E-02	ND	1.6E+00	7.7E-02	ND	1.6E+00	5.1E-02
p-mentha-1,5-diene		ND	1.6E+00	4.1E-02	ND	1.5E+00	3.6E-02	ND	1.6E+00	7.7E-02	ND	1.6E+00	5.1E-02
methanol	(H)		3.0E+00	1.8E-02		1.8E+00	1.0E-02		2.1E+00	2.3E-02		2.3E+00	1.7E-02
methyl ethyl ketone (MEK)	(H)	ND	3.1E-01	4.2E-03	ND	2.5E-01	3.2E-03	ND	3.5E-01	8.6E-03	ND	3.0E-01	5.3E-03
methyl isobutyl ketone	(H)	ND	2.1E-01	4.0E-03	ND	1.8E-01	3.1E-03	ND	2.3E-01	8.1E-03	ND	2.1E-01	5.1E-03
methylene chloride	(H)	ND	8.0E-02	1.3E-03	ND	7.6E-02	1.1E-03	ND	8.2E-02	2.4E-03	ND	7.9E-02	1.6E-03
phenol	(H)	ND	3.8E-01	6.8E-03	ND	3.1E-01	5.1E-03	ND	4.3E-01	1.4E-02	ND	3.8E-01	8.7E-03
alpha-pinene		ND	1.6E+00	4.1E-02	ND	1.5E+00	3.6E-02	ND	1.6E+00	7.7E-02	ND	1.6E+00	5.1E-02
beta-pinene		ND	1.6E+00	4.1E-02	ND	1.5E+00	3.6E-02	ND	1.6E+00	7.7E-02	ND	1.6E+00	5.1E-02
propionaldehyde	(H)	ND	3.4E-01	3.8E-03	ND	2.8E-01	2.9E-03	ND	3.9E-01	7.8E-03	ND	3.4E-01	4.8E-03
styrene	(H)	ND	8.0E-02	1.6E-03	ND	7.6E-02	1.4E-03	ND	8.2E-02	2.9E-03	ND	7.9E-02	2.0E-03
toluene	(H)	ND	8.0E-02	1.4E-03	ND	7.6E-02	1.2E-03	ND	8.2E-02	2.6E-03	ND	7.9E-02	1.7E-03
1,2,4-trichlorobenzene	(H)	ND	8.0E-02	2.7E-03	ND	7.6E-02	2.4E-03	ND	8.2E-02	5.1E-03	ND	7.9E-02	3.4E-03
m,p-xylene	(H)	ND	8.0E-02	1.6E-03	ND	7.6E-02	1.4E-03	ND	8.2E-02	3.0E-03	ND	7.9E-02	2.0E-03
o-xylene	(H)	ND	8.0E-02	1.6E-03	ND	7.6E-02	1.4E-03	ND	8.2E-02	3.0E-03	ND	7.9E-02	2.0E-03
THC as Carbon		NA			NA			NA					
Total HAPs				1.8E-02			1.0E-02			2.3E-02			1.7E-02
Total Terpenes				0.0E+00			0.0E+00			0.0E+00			0.0E+00
Production Rate (MSF 3/8 /hr)				12.2			12.1			7.6			10.6
Vol. Flow Rate (DSCFM)				1.5E+04			1.4E+04			1.7E+04			1.5E+04
Source Moisture (%)				1.2			1.2			1.2			1.2
Source Temp (°C)				36.8			36.6			28.8			34.1

ND x.xxEx = Below detection limit of x.xxEx; BP = Below practical quantitation limit; IM = Below detection limit in impinger sample; NA = Not analyzed by this method; H = CAA HAP; N = Not a HAP or VOC as defined by US EPA; TM = Start and end times for THC and speciated compounds differ; QA = Failed quality assurance; MSF = 1000 square feet; ODTH = Oven Dried Tons per Hour; AI = Analytical Interference; MLF = 1000 Linear Feet; MCF = 1000 Cubic Feet

Table B57. Summary of Emission Test Results
Softwood Plywood Hot Press, Unpowered Vent Above No. 1 Press (194-1PB1)

Analyte		194-1PB1N1			194-1PB1N2			194-1PB1N3			Average Emission		
			ppmVd	lb/MSF		ppmVd	lb/MSF		ppmVd	lb/MSF		ppmVd	lb/MSF
acetaldehyde	(H)	BP	7.6E-01	1.2E-03	ND	4.4E-01	1.3E-03	IM	4.1E-01	6.0E-04		3.9E-01	6.1E-04
acetone	(N)		1.2E+00	2.5E-03	BP	7.0E-01	2.7E-03	BP	6.9E-01	1.3E-03		8.5E-01	2.2E-03
acrolein	(H)	ND	2.8E-01	5.7E-04	ND	3.2E-01	1.2E-03	ND	2.7E-01	5.1E-04	ND	2.9E-01	7.5E-04
benzene	(H)	ND	7.9E-02	2.3E-04	ND	1.1E-01	5.6E-04	ND	8.3E-02	2.2E-04	ND	9.0E-02	3.3E-04
bromomethane	(H)	ND	7.9E-02	2.8E-04	ND	1.1E-01	6.8E-04	ND	8.3E-02	2.6E-04	ND	9.0E-02	4.0E-04
camphene		ND	1.6E+00	7.9E-03	ND	2.2E+00	1.9E-02	ND	1.7E+00	7.5E-03	ND	1.8E+00	1.2E-02
3-carene		ND	1.6E+00	7.9E-03	ND	2.2E+00	1.9E-02	ND	1.7E+00	7.5E-03	ND	1.8E+00	1.2E-02
chloroethane	(H)	ND	7.9E-02	1.9E-04	ND	1.1E-01	4.6E-04	ND	8.3E-02	1.8E-04	ND	9.0E-02	2.7E-04
chloroethene	(H)	ND	7.9E-02	1.8E-04	ND	1.1E-01	4.4E-04	ND	8.3E-02	1.7E-04	ND	9.0E-02	2.7E-04
cumene	(H)	ND	1.6E+00	7.0E-03	ND	2.2E+00	1.7E-02	ND	1.7E+00	6.6E-03	ND	1.8E+00	1.0E-02
p-cymene		ND	1.6E+00	7.8E-03	ND	2.2E+00	1.9E-02	ND	1.7E+00	7.4E-03	ND	1.8E+00	1.1E-02
1,2-dichloroethane	(H)	ND	7.9E-02	2.9E-04	ND	1.1E-01	7.0E-04	ND	8.3E-02	2.7E-04	ND	9.0E-02	4.2E-04
cis-1,2-dichloroethylene		ND	7.9E-02	2.8E-04	ND	1.1E-01	6.9E-04	ND	8.3E-02	2.7E-04	ND	9.0E-02	4.1E-04
formaldehyde	(H)	ND	1.2E-01	1.3E-04	ND	1.4E-01	2.8E-04	ND	1.2E-01	1.2E-04	ND	1.3E-01	1.8E-04
limonene		ND	1.6E+00	7.9E-03	ND	2.2E+00	1.9E-02	ND	1.7E+00	7.5E-03	ND	1.8E+00	1.2E-02
p-mentha-1,5-diene		ND	1.6E+00	7.9E-03	ND	2.2E+00	1.9E-02	ND	1.7E+00	7.5E-03	ND	1.8E+00	1.2E-02
methanol	(H)		4.8E+01	5.6E-02		3.9E+01	8.3E-02		4.0E+01	4.2E-02		4.2E+01	6.0E-02
methyl ethyl ketone (MEK)	(H)	ND	2.7E-01	7.2E-04	ND	3.1E-01	1.5E-03	ND	2.7E-01	6.4E-04	ND	2.8E-01	9.5E-04
methyl isobutyl ketone	(H)	ND	1.9E-01	7.0E-04	ND	2.3E-01	1.5E-03	BP	3.9E-01	1.3E-03		1.3E-01	4.3E-04
methylene chloride	(H)	ND	7.9E-02	2.5E-04	ND	1.1E-01	6.0E-04	ND	8.3E-02	2.3E-04	ND	9.0E-02	3.6E-04
phenol	(H)	ND	3.3E-01	1.2E-03	ND	3.8E-01	2.4E-03	ND	3.3E-01	1.0E-03	ND	3.5E-01	1.5E-03
alpha-pinene			1.2E+01	5.8E-02		5.8E+00	5.2E-02		9.0E+00	4.1E-02		8.8E+00	5.0E-02
beta-pinene			3.7E+00	1.9E-02		2.3E+00	2.1E-02		3.1E+00	1.4E-02		3.0E+00	1.8E-02
propionaldehyde	(H)	ND	3.0E-01	6.4E-04	ND	3.4E-01	1.3E-03	ND	3.0E-01	5.7E-04	ND	3.1E-01	8.5E-04
styrene	(H)	ND	7.9E-02	3.0E-04	ND	1.1E-01	7.4E-04	ND	8.3E-02	2.9E-04	ND	9.0E-02	4.4E-04
toluene	(H)	ND	7.9E-02	2.7E-04	ND	1.1E-01	6.6E-04	ND	8.3E-02	2.5E-04	ND	9.0E-02	3.9E-04
1,2,4-trichlorobenzene	(H)	ND	7.9E-02	5.3E-04	ND	1.1E-01	1.3E-03	ND	8.3E-02	5.0E-04	ND	9.0E-02	7.7E-04
m,p-xylene	(H)	ND	7.9E-02	3.1E-04	ND	1.1E-01	7.5E-04	ND	8.3E-02	2.9E-04	ND	9.0E-02	4.5E-04
o-xylene	(H)	ND	7.9E-02	3.1E-04	ND	1.1E-01	7.5E-04	ND	8.3E-02	2.9E-04	ND	9.0E-02	4.5E-04
THC as Carbon			2.7E+02	1.2E-01		1.5E+02	1.2E-01		2.2E+02	8.8E-02		2.1E+02	1.1E-01
Total HAPs				5.7E-02			8.3E-02			4.4E-02			6.2E-02
Total Terpenes				7.7E-02			7.3E-02			5.4E-02			6.8E-02
Production Rate (MSF 3/8 /hr)				15.9			9.1			18.2			14.4
Vol. Flow Rate (DSCFM)				3.8E+03			3.9E+03			3.9E+03			3.8E+03
Source Moisture (%)				2.7			2.7			2.8			2.7
Source Temp (°C)				32.3			33.9			31.7			32.6

ND x.xxEx = Below detection limit of x.xxEx; BP = Below practical quantitation limit; IM = Below detection limit in impinger sample; NA = Not analyzed by this method; H = CAA HAP; N = Not a HAP or VOC as defined by US EPA; TM = Start and end times for THC and speciated compounds differ; QA = Failed quality assurance; MSF = 1000 square feet; ODTH = Oven Dried Tons per Hour; AI = Analytical Interference; MLF = 1000 Linear Feet; MCF = 1000 Cubic Feet

12/9/99
9:12 AM

Table B58. Summary of Emission Test Results
Softwood Plywood Hot Press, Powered Vent Above No. 2 Press (194-2PB1)

Analyte		194-2PB1N1			194-2PB1N2			194-2PB1N3			Average Emission		
			ppmVd	lb/MSF		ppmVd	lb/MSF		ppmVd	lb/MSF		ppmVd	lb/MSF
acetaldehyde	(H)	BP	8.4E-01	7.9E-03	IM	3.9E-01	5.2E-03	ND	3.8E-01	4.3E-03		4.1E-01	4.4E-03
acetone	(N)	BP	6.9E-01	8.5E-03	BP	5.6E-01	9.9E-03	BP	4.2E-01	6.3E-03		5.6E-01	8.3E-03
acrolein	(H)	ND	2.7E-01	3.3E-03	ND	2.7E-01	4.5E-03	ND	2.7E-01	3.8E-03	ND	2.7E-01	3.9E-03
benzene	(H)	ND	8.2E-02	1.4E-03	ND	7.3E-02	1.7E-03	ND	7.8E-02	1.6E-03	ND	7.8E-02	1.6E-03
bromomethane	(H)	ND	8.2E-02	1.7E-03	ND	7.3E-02	2.1E-03	ND	7.8E-02	1.9E-03	ND	7.8E-02	1.9E-03
camphene		ND	1.6E+00	4.8E-02	ND	1.5E+00	6.0E-02	ND	1.6E+00	5.5E-02	ND	1.6E+00	5.4E-02
3-carene		ND	1.6E+00	4.8E-02	ND	1.5E+00	6.0E-02	ND	1.6E+00	5.5E-02	ND	1.6E+00	5.4E-02
chloroethane	(H)	ND	8.2E-02	1.1E-03	ND	7.3E-02	1.4E-03	ND	7.8E-02	1.3E-03	ND	7.8E-02	1.3E-03
chloroethene	(H)	ND	8.2E-02	1.1E-03	ND	7.3E-02	1.4E-03	ND	7.8E-02	1.3E-03	ND	7.8E-02	1.2E-03
cumene	(H)	ND	1.6E+00	4.2E-02	ND	1.5E+00	5.3E-02	ND	1.6E+00	4.8E-02	ND	1.6E+00	4.8E-02
p-cymene		ND	1.6E+00	4.7E-02	ND	1.5E+00	5.9E-02	ND	1.6E+00	5.4E-02	ND	1.6E+00	5.3E-02
1,2-dichloroethane	(H)	ND	8.2E-02	1.7E-03	ND	7.3E-02	2.2E-03	ND	7.8E-02	2.0E-03	ND	7.8E-02	2.0E-03
cis-1,2-dichloroethylene		ND	8.2E-02	1.7E-03	ND	7.3E-02	2.1E-03	ND	7.8E-02	1.9E-03	ND	7.8E-02	1.9E-03
formaldehyde	(H)		1.4E+00	8.9E-03		5.4E-01	4.9E-03	BP	3.3E-01	2.6E-03		7.5E-01	5.4E-03
limonene		ND	1.6E+00	4.8E-02	ND	1.5E+00	6.0E-02	ND	1.6E+00	5.5E-02	ND	1.6E+00	5.4E-02
p-mentha-1,5-diene		ND	1.6E+00	4.8E-02	ND	1.5E+00	6.0E-02	ND	1.6E+00	5.5E-02	ND	1.6E+00	5.4E-02
methanol	(H)		2.6E+01	1.8E-01		3.3E+01	3.2E-01		2.9E+01	2.4E-01		2.9E+01	2.5E-01
methyl ethyl ketone (MEK)	(H)	ND	2.7E-01	4.1E-03	ND	2.6E-01	5.7E-03	ND	2.6E-01	4.8E-03	ND	2.6E-01	4.9E-03
methyl isobutyl ketone	(H)	ND	1.9E-01	4.0E-03	ND	1.8E-01	5.5E-03	ND	1.8E-01	4.7E-03	ND	1.8E-01	4.8E-03
methylene chloride	(H)	ND	8.2E-02	1.5E-03	ND	7.3E-02	1.9E-03	ND	7.8E-02	1.7E-03	ND	7.8E-02	1.7E-03
phenol	(H)	ND	3.3E-01	6.6E-03	ND	3.2E-01	9.2E-03	ND	3.2E-01	7.8E-03	ND	3.2E-01	7.9E-03
alpha-pinene			5.8E+00	1.7E-01		4.6E+00	1.9E-01		4.8E+00	1.7E-01		5.1E+00	1.8E-01
beta-pinene			2.1E+00	6.0E-02		1.7E+00	7.2E-02		1.8E+00	6.3E-02		1.9E+00	6.5E-02
propionaldehyde	(H)	ND	3.0E-01	3.7E-03	ND	2.9E-01	5.1E-03	ND	2.9E-01	4.3E-03	ND	2.9E-01	4.4E-03
styrene	(H)	ND	8.2E-02	1.8E-03	ND	7.3E-02	2.3E-03	ND	7.8E-02	2.1E-03	ND	7.8E-02	2.1E-03
toluene	(H)	ND	8.2E-02	1.6E-03	ND	7.3E-02	2.0E-03	ND	7.8E-02	1.8E-03	ND	7.8E-02	1.8E-03
1,2,4-trichlorobenzene	(H)	ND	8.2E-02	3.2E-03	ND	7.3E-02	4.0E-03	ND	7.8E-02	3.6E-03	ND	7.8E-02	3.6E-03
m,p-xylene	(H)	ND	8.2E-02	1.9E-03	ND	7.3E-02	2.3E-03	ND	7.8E-02	2.1E-03	ND	7.8E-02	2.1E-03
o-xylene	(H)	ND	8.2E-02	1.9E-03	ND	7.3E-02	2.3E-03	ND	7.8E-02	2.1E-03	ND	7.8E-02	2.1E-03
THC as Carbon			1.4E+02	3.6E-01		1.1E+02	4.1E-01		1.1E+02	3.5E-01		1.2E+02	3.7E-01
Total HAPs				1.9E-01			3.3E-01			2.4E-01			2.5E-01
Total Terpenes				2.3E-01			2.6E-01			2.3E-01			2.4E-01
Production Rate (MSF 3/8 /hr)				15.9			11.3			13.8			13.7
Vol. Flow Rate (DSCFM)				2.2E+04			2.2E+04			2.3E+04			2.2E+04
Source Moisture (%)				2.5			2.1			2.0			2.2
Source Temp (°C)				26.9			29.4			29.7			28.7

ND x.xxEx = Below detection limit of x.xxEx; BP = Below practical quantitation limit; IM = Below detection limit in impinger sample; NA = Not analyzed by this method; H = CAA HAP; N = Not a HAP or VOC as defined by US EPA; TM = Start and end times for THC and speciated compounds differ; QA = Failed quality assurance; MSF = 1000 square feet; ODTH = Oven Dried Tons per Hour; AI = Analytical Interference; MLF = 1000 Linear Feet; MCF = 1000 Cubic Feet

Table B59. Summary of Emission Test Results
Softwood Veneer Dryer, RCO Outlet (194-XDV1)

Analyte		194-XDV1N2			194-XDV1N3			194-XDV1N4			Average Emission		
			ppmVd	lb/MSF		ppmVd	lb/MSF		ppmVd	lb/MSF		ppmVd	lb/MSF
acetaldehyde	(H)		9.2E+00	6.7E-02		6.6E+00	4.7E-02		1.0E+01	7.1E-02		8.6E+00	6.1E-02
acetone	(N)		4.9E+00	4.7E-02		5.1E+00	4.8E-02		5.4E+00	5.0E-02		5.1E+00	4.8E-02
acrolein	(H)	ND	2.9E-01	2.7E-03	ND	2.9E-01	2.6E-03	ND	2.9E-01	2.6E-03	ND	2.9E-01	2.6E-03
benzene	(H)	ND	8.3E-02	1.1E-03	ND	8.5E-02	1.1E-03	ND	8.4E-02	1.0E-03	ND	8.4E-02	1.1E-03
bromomethane	(H)	ND	8.3E-02	1.3E-03	ND	8.5E-02	1.3E-03	ND	8.4E-02	1.3E-03	ND	8.4E-02	1.3E-03
camphene		ND	1.7E+00	3.7E-02	ND	1.7E+00	3.7E-02	ND	1.7E+00	3.7E-02	ND	1.7E+00	3.7E-02
3-carene		ND	1.7E+00	3.7E-02	ND	1.7E+00	3.7E-02	ND	1.7E+00	3.7E-02	ND	1.7E+00	3.7E-02
chloroethane	(H)	ND	8.3E-02	8.8E-04	ND	8.5E-02	8.9E-04	ND	8.4E-02	8.7E-04	ND	8.4E-02	8.8E-04
chloroethene	(H)	ND	8.3E-02	8.5E-04	ND	8.5E-02	8.6E-04	ND	8.4E-02	8.4E-04	ND	8.4E-02	8.5E-04
cumene	(H)	ND	1.7E+00	3.3E-02	ND	1.7E+00	3.3E-02	ND	1.7E+00	3.2E-02	ND	1.7E+00	3.3E-02
p-cymene		ND	1.7E+00	3.7E-02	ND	1.7E+00	3.7E-02	ND	1.7E+00	3.6E-02	ND	1.7E+00	3.7E-02
1,2-dichloroethane	(H)	ND	8.3E-02	1.4E-03	ND	8.5E-02	1.4E-03	ND	8.4E-02	1.3E-03	ND	8.4E-02	1.3E-03
cis-1,2-dichloroethylene		ND	8.3E-02	1.3E-03	ND	8.5E-02	1.3E-03	ND	8.4E-02	1.3E-03	ND	8.4E-02	1.3E-03
formaldehyde	(H)		6.8E+00	3.4E-02		7.9E+00	3.8E-02		9.0E+00	4.3E-02		7.9E+00	3.8E-02
limonene		ND	1.7E+00	3.7E-02	ND	1.7E+00	3.7E-02	ND	1.7E+00	3.7E-02	ND	1.7E+00	3.7E-02
p-mentha-1,5-diene		ND	1.7E+00	3.7E-02	ND	1.7E+00	3.7E-02	ND	1.7E+00	3.7E-02	ND	1.7E+00	3.7E-02
methanol	(H)	BP	8.7E-01	4.6E-03	BP	9.8E-01	5.0E-03	BP	9.6E-01	4.9E-03		9.4E-01	4.9E-03
methyl ethyl ketone (MEK)	(H)	ND	2.9E-01	3.4E-03	ND	2.9E-01	3.3E-03	ND	2.8E-01	3.2E-03	ND	2.8E-01	3.3E-03
methyl isobutyl ketone	(H)	ND	2.0E-01	3.3E-03	ND	2.0E-01	3.2E-03	ND	2.0E-01	3.2E-03	ND	2.0E-01	3.2E-03
methylene chloride	(H)	ND	8.3E-02	1.2E-03	ND	8.5E-02	1.2E-03	ND	8.4E-02	1.1E-03	ND	8.4E-02	1.2E-03
phenol	(H)	IM	3.6E-01	5.6E-03	IM	3.6E-01	5.4E-03	IM	3.5E-01	5.3E-03		3.6E-01	5.5E-03
alpha-pinene		ND	1.7E+00	3.7E-02	ND	1.7E+00	3.7E-02	ND	1.7E+00	3.7E-02	ND	1.7E+00	3.7E-02
beta-pinene		ND	1.7E+00	3.7E-02	ND	1.7E+00	3.7E-02	ND	1.7E+00	3.7E-02	ND	1.7E+00	3.7E-02
propionaldehyde	(H)	ND	3.2E-01	3.1E-03	ND	3.2E-01	3.0E-03	ND	3.1E-01	2.9E-03	ND	3.2E-01	3.0E-03
styrene	(H)	ND	8.3E-02	1.4E-03	ND	8.5E-02	1.4E-03	ND	8.4E-02	1.4E-03	ND	8.4E-02	1.4E-03
toluene	(H)	ND	8.3E-02	1.3E-03	ND	8.5E-02	1.3E-03	ND	8.4E-02	1.2E-03	ND	8.4E-02	1.3E-03
1,2,4-trichlorobenzene	(H)	ND	8.3E-02	2.5E-03	ND	8.5E-02	2.5E-03	ND	8.4E-02	2.4E-03	ND	8.4E-02	2.5E-03
m,p-xylene	(H)	ND	8.3E-02	1.5E-03	ND	8.5E-02	1.5E-03	ND	8.4E-02	1.4E-03	ND	8.4E-02	1.4E-03
o-xylene	(H)	ND	8.3E-02	1.5E-03	ND	8.5E-02	1.5E-03	ND	8.4E-02	1.4E-03	ND	8.4E-02	1.4E-03
THC as Carbon			1.3E+02	2.6E-01		1.6E+02	3.1E-01		1.7E+02	3.3E-01		1.5E+02	3.0E-01
Total HAPs				1.1E-01			9.5E-02			1.2E-01			1.1E-01
Total Terpenes				0.0E+00			0.0E+00			0.0E+00			0.0E+00
Production Rate (MSF 3/8 /hr)				26.7			26.8			27.3			26.9
Vol. Flow Rate (DSCFM)				2.8E+04			2.8E+04			2.8E+04			2.8E+04
Source Moisture (%)				30.6			32.4			33.6			32.2
Source Temp (°C)				191.7			186.1			183.1			186.9

ND x.xxEx = Below detection limit of x.xxEx; BP = Below practical quantitation limit; IM = Below detection limit in impinger sample; NA = Not analyzed by this method; H = CAA HAP; N = Not a HAP or VOC as defined by US EPA; TM = Start and end times for THC and speciated compounds differ; QA = Failed quality assurance; MSF = 1000 square feet; ODTH = Oven Dried Tons per Hour; AI = Analytical Interference; MLF = 1000 Linear Feet; MCF = 1000 Cubic Feet

12/9/99
9:13 AM

Table B60. Summary of Emission Test Results
Softwood Veneer Dryer, Combined Dryer Exhaust At Inlet To RCO (194-XDV2)

Analyte		194-XDV2N2			194-XDV2N3			194-XDV2N4			Average Emission		
			ppmVd	lb/MSF		ppmVd	lb/MSF		ppmVd	lb/MSF		ppmVd	lb/MSF
acetaldehyde	(H)		1.4E+01	8.3E-02		1.3E+01	6.7E-02		2.0E+01	1.1E-01		1.5E+01	8.5E-02
acetone	(N)		7.3E+00	5.6E-02		7.7E+00	5.3E-02		8.4E+00	6.0E-02		7.8E+00	5.7E-02
acrolein	(H)	IM	3.3E-01	2.4E-03		1.2E+00	8.3E-03		1.2E+00	8.4E-03		9.2E-01	6.4E-03
benzene	(H)		3.7E-01	3.8E-03		3.6E-01	3.4E-03		3.7E-01	3.5E-03		3.7E-01	3.6E-03
bromomethane	(H)	ND	8.9E-02	1.1E-03	ND	8.0E-02	9.1E-04	ND	8.8E-02	1.0E-03	ND	8.6E-02	1.0E-03
camphene		ND	1.8E+00	3.2E-02	ND	1.6E+00	2.6E-02	ND	1.8E+00	3.0E-02	ND	1.7E+00	2.9E-02
3-carene		ND	1.8E+00	3.2E-02	ND	1.6E+00	2.6E-02	ND	1.8E+00	3.0E-02	ND	1.7E+00	2.9E-02
chloroethane	(H)	ND	8.9E-02	7.7E-04	ND	8.0E-02	6.2E-04	ND	8.8E-02	7.0E-04	ND	8.6E-02	7.0E-04
chloroethene	(H)	ND	8.9E-02	7.4E-04	ND	8.0E-02	6.0E-04	ND	8.8E-02	6.8E-04	ND	8.6E-02	6.7E-04
cumene	(H)	ND	1.8E+00	2.9E-02	ND	1.6E+00	2.3E-02	ND	1.8E+00	2.6E-02	ND	1.7E+00	2.6E-02
p-cymene		ND	1.8E+00	3.2E-02	ND	1.6E+00	2.6E-02	ND	1.8E+00	2.9E-02	ND	1.7E+00	2.9E-02
1,2-dichloroethane	(H)	ND	8.9E-02	1.2E-03	ND	8.0E-02	9.5E-04	ND	8.8E-02	1.1E-03	ND	8.6E-02	1.1E-03
cis-1,2-dichloroethylene		ND	8.9E-02	1.2E-03	ND	8.0E-02	9.3E-04	ND	8.8E-02	1.1E-03	ND	8.6E-02	1.0E-03
formaldehyde	(H)		2.0E+01	8.1E-02		2.1E+01	7.6E-02		2.1E+01	7.9E-02		2.1E+01	7.8E-02
limonene			4.9E+00	9.0E-02		4.6E+00	7.6E-02		5.4E+00	9.0E-02		5.0E+00	8.5E-02
p-mentha-1,5-diene		ND	1.8E+00	3.2E-02	ND	1.6E+00	2.6E-02	ND	1.8E+00	3.0E-02	ND	1.7E+00	2.9E-02
methanol	(H)	BP	1.1E+00	4.7E-03		1.2E+01	4.5E-02		1.5E+01	5.9E-02		9.3E+00	3.6E-02
methyl ethyl ketone (MEK)	(H)	BP	4.6E-01	4.5E-03	ND	2.7E-01	2.4E-03	BP	3.0E-01	2.6E-03		2.5E-01	2.4E-03
methyl isobutyl ketone	(H)	BP	2.3E-01	3.0E-03	ND	1.9E-01	2.3E-03	ND	2.0E-01	2.5E-03		7.5E-02	1.0E-03
methylene chloride	(H)	ND	8.9E-02	1.0E-03	ND	8.0E-02	8.1E-04	ND	8.8E-02	9.2E-04	ND	8.6E-02	9.2E-04
phenol	(H)	BP	9.2E-01	1.2E-02	BP	5.3E-01	6.0E-03	BP	5.1E-01	5.9E-03		6.5E-01	7.8E-03
alpha-pinene			7.2E+01	1.3E+00		6.7E+01	1.1E+00		7.7E+01	1.3E+00		7.2E+01	1.2E+00
beta-pinene			2.6E+01	4.6E-01		2.7E+01	4.4E-01		3.1E+01	5.3E-01		2.8E+01	4.8E-01
propionaldehyde	(H)	ND	3.2E-01	2.5E-03	BP	3.5E-01	2.4E-03	BP	4.0E-01	2.9E-03		2.5E-01	1.8E-03
styrene	(H)		1.6E-01	2.2E-03		1.4E-01	1.7E-03		1.3E-01	1.7E-03		1.4E-01	1.9E-03
toluene	(H)		5.1E-01	6.3E-03		4.8E-01	5.3E-03		4.9E-01	5.6E-03		4.9E-01	5.7E-03
1,2,4-trichlorobenzene	(H)	ND	8.9E-02	2.2E-03	ND	8.0E-02	1.7E-03	ND	8.8E-02	2.0E-03	ND	8.6E-02	2.0E-03
m,p-xylene	(H)		3.4E-01	4.8E-03		2.8E-01	3.5E-03		2.8E-01	3.6E-03		3.0E-01	4.0E-03
o-xylene	(H)	ND	8.9E-02	1.3E-03	ND	8.0E-02	1.0E-03	ND	8.8E-02	1.2E-03	ND	8.6E-02	1.1E-03
THC as Carbon			2.2E+03	3.5E+00		1.4E+03	2.0E+00		1.9E+03	2.8E+00		1.8E+03	2.8E+00
Total HAPs				2.1E-01			2.2E-01			2.8E-01			2.3E-01
Total Terpenes				1.9E+00			1.6E+00			1.9E+00			1.8E+00
Production Rate (MSF 3/8 /hr)				26.7			26.8			27.3			26.9
Vol. Flow Rate (DSCFM)				2.3E+04			2.1E+04			2.2E+04			2.2E+04
Source Moisture (%)				36.2			35.0			34.7			35.3
Source Temp (°C)				154.4			150.0			148.1			150.8

ND x.xxEx = Below detection limit of x.xxEx; BP = Below practical quantitation limit; IM = Below detection limit in impinger sample; NA = Not analyzed by this method; H = CAA HAP; N = Not a HAP or VOC as defined by US EPA; TM = Start and end times for THC and speciated compounds differ; QA = Failed quality assurance; MSF = 1000 square feet; ODTH = Oven Dried Tons per Hour; AI = Analytical Interference; MLF = 1000 Linear Feet; MCF = 1000 Cubic Feet

Table B61. Summary of Emission Test Results
Hardwood Veneer Dryer No. 3, White Oak Furnish, Cooling Section Vent (400-3DV1)

Analyte		400-3DV1N1			400-3DV1N2			400-3DV1N3			Average Emission		
			ppmVd	lb/MSF		ppmVd	lb/MSF		ppmVd	lb/MSF		ppmVd	lb/MSF
acetaldehyde	(H)	BP	5.3E-01	3.5E-03	BP	5.1E-01	3.3E-03	ND	4.5E-01	2.6E-03		3.5E-01	2.3E-03
acetone	(N)	IM	3.1E-01	2.7E-03	IM	3.1E-01	2.6E-03	IM	3.9E-01	3.0E-03		3.4E-01	2.8E-03
acrolein	(H)	ND	2.6E-01	2.2E-03	ND	2.6E-01	2.1E-03	ND	3.3E-01	2.5E-03	ND	2.8E-01	2.3E-03
benzene	(H)	ND	8.0E-02	9.5E-04	ND	7.6E-02	8.6E-04	ND	1.4E-01	1.5E-03	ND	1.0E-01	1.1E-03
bromomethane	(H)	ND	8.0E-02	1.2E-03	ND	7.6E-02	1.0E-03	ND	1.4E-01	1.8E-03	ND	1.0E-01	1.3E-03
camphene		ND	1.6E+00	3.3E-02	ND	1.5E+00	3.0E-02	ND	2.9E+00	5.2E-02	ND	2.0E+00	3.8E-02
3-carene		ND	1.6E+00	3.3E-02	ND	1.5E+00	3.0E-02	ND	2.9E+00	5.2E-02	ND	2.0E+00	3.8E-02
chloroethane	(H)	ND	8.0E-02	7.8E-04	ND	7.6E-02	7.1E-04	ND	1.4E-01	1.2E-03	ND	1.0E-01	9.1E-04
chloroethene	(H)	ND	8.0E-02	7.6E-04	ND	7.6E-02	6.9E-04	ND	1.4E-01	1.2E-03	ND	1.0E-01	8.8E-04
cumene	(H)	ND	1.6E+00	2.9E-02	ND	1.5E+00	2.6E-02	ND	2.9E+00	4.6E-02	ND	2.0E+00	3.4E-02
p-cymene		ND	1.6E+00	3.3E-02	ND	1.5E+00	3.0E-02	ND	2.9E+00	5.1E-02	ND	2.0E+00	3.8E-02
1,2-dichloroethane	(H)	ND	8.0E-02	1.2E-03	ND	7.6E-02	1.1E-03	ND	1.4E-01	1.9E-03	ND	1.0E-01	1.4E-03
cis-1,2-dichloroethylene		ND	8.0E-02	1.2E-03	ND	7.6E-02	1.1E-03	ND	1.4E-01	1.8E-03	ND	1.0E-01	1.4E-03
formaldehyde	(H)	ND	1.4E-01	6.2E-04	ND	1.4E-01	6.3E-04	ND	1.5E-01	5.8E-04	ND	1.4E-01	6.1E-04
limonene		ND	1.6E+00	3.3E-02	ND	1.5E+00	3.0E-02	ND	2.9E+00	5.2E-02	ND	2.0E+00	3.8E-02
p-mentha-1,5-diene		ND	1.6E+00	3.3E-02	ND	1.5E+00	3.0E-02	ND	2.9E+00	5.2E-02	ND	2.0E+00	3.8E-02
methanol	(H)	IM	5.0E-01	2.4E-03	ND	4.8E-01	2.2E-03	ND	5.6E-01	2.4E-03		1.7E-01	8.0E-04
methyl ethyl ketone (MEK)	(H)	ND	2.5E-01	2.7E-03	ND	2.6E-01	2.7E-03	ND	3.3E-01	3.1E-03	ND	2.8E-01	2.8E-03
methyl isobutyl ketone	(H)	ND	1.8E-01	2.7E-03	ND	1.8E-01	2.6E-03	ND	2.5E-01	3.3E-03	ND	2.0E-01	2.9E-03
methylene chloride	(H)	ND	8.0E-02	1.0E-03	ND	7.6E-02	9.3E-04	ND	1.4E-01	1.6E-03	ND	1.0E-01	1.2E-03
phenol	(H)	ND	3.1E-01	4.4E-03	ND	3.2E-01	4.3E-03	ND	3.9E-01	4.8E-03	ND	3.4E-01	4.5E-03
alpha-pinene		ND	1.6E+00	3.3E-02	ND	1.5E+00	3.0E-02	ND	2.9E+00	5.2E-02	ND	2.0E+00	3.8E-02
beta-pinene		ND	1.6E+00	3.3E-02	ND	1.5E+00	3.0E-02	ND	2.9E+00	5.2E-02	ND	2.0E+00	3.8E-02
propionaldehyde	(H)	ND	2.8E-01	2.4E-03	ND	2.9E-01	2.4E-03	ND	3.6E-01	2.7E-03	ND	3.1E-01	2.5E-03
styrene	(H)	ND	8.0E-02	1.3E-03	ND	7.6E-02	1.1E-03	ND	1.4E-01	2.0E-03	ND	1.0E-01	1.5E-03
toluene	(H)	ND	8.0E-02	1.1E-03	ND	7.6E-02	1.0E-03	ND	1.4E-01	1.7E-03	ND	1.0E-01	1.3E-03
1,2,4-trichlorobenzene	(H)	ND	8.0E-02	2.2E-03	ND	7.6E-02	2.0E-03	ND	1.4E-01	3.4E-03	ND	1.0E-01	2.5E-03
m,p-xylene	(H)	ND	8.0E-02	1.3E-03	ND	7.6E-02	1.2E-03	ND	1.4E-01	2.0E-03	ND	1.0E-01	1.5E-03
o-xylene	(H)	ND	8.0E-02	1.3E-03	ND	7.6E-02	1.2E-03	ND	1.4E-01	2.0E-03	ND	1.0E-01	1.5E-03
THC as Carbon		NA			TM	5.0E+01	8.7E-02	NA				5.0E+01	8.7E-02
Total HAPs				5.9E-03			3.3E-03			0.0E+00			3.1E-03
Total Terpenes				0.0E+00			0.0E+00			0.0E+00			0.0E+00
Production Rate (MSF/hr)				18.2			19.2			21.2			19.5
Vol. Flow Rate (DSCFM)				1.8E+04			1.8E+04			1.8E+04			1.8E+04
Source Moisture (%)				1.4			1.6			1.8			1.6
Source Temp (°C)				21.3			21.1			20.2			20.9

ND x.xxEx = Below detection limit of x.xxEx; BP = Below practical quantitation limit; IM = Below detection limit in impinger sample; NA = Not analyzed by this method; H = CAA HAP; N = Not a HAP or VOC as defined by US EPA; TM = Start and end times for THC and speciated compounds differ; QA = Failed quality assurance; MSF = 1000 square feet; ODTH = Oven Dried Tons per Hour; AI = Analytical Interference; MLF = 1000 Linear Feet; MCF = 1000 Cubic Feet

12/9/99
9:13 AM

Table B62. Summary of Emission Test Results
Hardwood Veneer Dryer No. 3, White Oak Furnish, Dry End Vent (400-3DV2)

Analyte		400-3DV2N1			400-3DV2N2			400-3DV2N3			Average Emission		
			ppmVd	lb/MSF		ppmVd	lb/MSF		ppmVd	lb/MSF		ppmVd	lb/MSF
acetaldehyde	(H)	BP	6.0E-01	8.6E-05	BP	4.6E-01	5.9E-05	BP	5.1E-01	5.9E-05		5.2E-01	6.8E-05
acetone	(N)	IM	3.0E-01	5.6E-05	IM	4.3E-01	7.4E-05	ND	3.3E-01	5.0E-05		2.5E-01	4.3E-05
acrolein	(H)	ND	2.5E-01	4.5E-05	ND	2.7E-01	4.4E-05	ND	3.1E-01	4.6E-05	ND	2.7E-01	4.5E-05
benzene	(H)	ND	8.4E-02	2.1E-05	ND	7.8E-02	1.8E-05	ND	1.7E-01	3.4E-05	ND	1.1E-01	2.4E-05
bromomethane	(H)	ND	8.4E-02	2.6E-05	ND	7.8E-02	2.2E-05	ND	1.7E-01	4.2E-05	ND	1.1E-01	3.0E-05
camphene		ND	1.7E+00	7.3E-04	ND	1.6E+00	6.2E-04	ND	3.3E+00	1.2E-03	ND	2.2E+00	8.5E-04
3-carene		ND	1.7E+00	7.3E-04	ND	1.6E+00	6.2E-04	ND	3.3E+00	1.2E-03	ND	2.2E+00	8.5E-04
chloroethane	(H)	ND	8.4E-02	1.7E-05	ND	7.8E-02	1.5E-05	ND	1.7E-01	2.8E-05	ND	1.1E-01	2.0E-05
chloroethene	(H)	ND	8.4E-02	1.7E-05	ND	7.8E-02	1.4E-05	ND	1.7E-01	2.8E-05	ND	1.1E-01	2.0E-05
cumene	(H)	ND	1.7E+00	6.5E-04	ND	1.6E+00	5.5E-04	ND	3.3E+00	1.1E-03	ND	2.2E+00	7.5E-04
p-cymene		ND	1.7E+00	7.2E-04	ND	1.6E+00	6.1E-04	ND	3.3E+00	1.2E-03	ND	2.2E+00	8.4E-04
1,2-dichloroethane	(H)	ND	8.4E-02	2.7E-05	ND	7.8E-02	2.3E-05	ND	1.7E-01	4.4E-05	ND	1.1E-01	3.1E-05
cis-1,2-dichloroethylene		ND	8.4E-02	2.6E-05	ND	7.8E-02	2.2E-05	ND	1.7E-01	4.3E-05	ND	1.1E-01	3.0E-05
formaldehyde	(H)		5.5E-01	5.3E-05	BP	2.4E-01	2.1E-05	BP	3.5E-01	2.8E-05		3.8E-01	3.4E-05
limonene		ND	1.7E+00	7.3E-04	ND	1.6E+00	6.2E-04	ND	3.3E+00	1.2E-03	ND	2.2E+00	8.5E-04
p-mentha-1,5-diene		ND	1.7E+00	7.3E-04	ND	1.6E+00	6.2E-04	ND	3.3E+00	1.2E-03	ND	2.2E+00	8.5E-04
methanol	(H)		3.9E+00	4.0E-04		3.7E+00	3.5E-04		1.7E+00	1.4E-04		3.1E+00	3.0E-04
methyl ethyl ketone (MEK)	(H)	ND	2.4E-01	5.6E-05	ND	2.6E-01	5.5E-05	ND	3.1E-01	5.8E-05	ND	2.7E-01	5.7E-05
methyl isobutyl ketone	(H)	ND	1.7E-01	5.7E-05	ND	1.8E-01	5.4E-05	ND	2.5E-01	6.5E-05	ND	2.0E-01	5.9E-05
methylene chloride	(H)	ND	8.4E-02	2.3E-05	ND	7.8E-02	1.9E-05	ND	1.7E-01	3.8E-05	ND	1.1E-01	2.7E-05
phenol	(H)	ND	2.9E-01	8.9E-05	ND	3.2E-01	8.8E-05	ND	3.5E-01	8.7E-05	ND	3.2E-01	8.8E-05
alpha-pinene		ND	1.7E+00	7.3E-04	ND	1.6E+00	6.2E-04	ND	3.3E+00	1.2E-03	ND	2.2E+00	8.5E-04
beta-pinene		ND	1.7E+00	7.3E-04	ND	1.6E+00	6.2E-04	ND	3.3E+00	1.2E-03	ND	2.2E+00	8.5E-04
propionaldehyde	(H)	ND	2.7E-01	5.0E-05	ND	2.9E-01	4.9E-05	ND	3.3E-01	5.0E-05	ND	3.0E-01	5.0E-05
styrene	(H)	ND	8.4E-02	2.8E-05	ND	7.8E-02	2.4E-05	ND	1.7E-01	4.6E-05	ND	1.1E-01	3.3E-05
toluene	(H)	ND	8.4E-02	2.5E-05	ND	7.8E-02	2.1E-05	ND	1.7E-01	4.1E-05	ND	1.1E-01	2.9E-05
1,2,4-trichlorobenzene	(H)	ND	8.4E-02	4.9E-05	ND	7.8E-02	4.1E-05	ND	1.7E-01	8.0E-05	ND	1.1E-01	5.7E-05
m,p-xylene	(H)	ND	8.4E-02	2.9E-05	ND	7.8E-02	2.4E-05	ND	1.7E-01	4.7E-05	ND	1.1E-01	3.3E-05
o-xylene	(H)	ND	8.4E-02	2.9E-05	ND	7.8E-02	2.4E-05	ND	1.7E-01	4.7E-05	ND	1.1E-01	3.3E-05
THC as Carbon		TM	8.4E+01	3.3E-03	NA			TM	7.3E+01	2.3E-03		7.8E+01	2.8E-03
Total HAPs				5.4E-04			4.3E-04			2.3E-04			4.0E-04
Total Terpenes				0.0E+00			0.0E+00			0.0E+00			0.0E+00
Production Rate (MSF/hr)				18.2			19.2			21.2			19.5
Vol. Flow Rate (DSCFM)				3.8E+02			3.6E+02			3.6E+02			3.7E+02
Source Moisture (%)				6.9			7.8			10.6			8.4
Source Temp (°C)				112.2			112.3			109.8			111.4

ND x.xxEx = Below detection limit of x.xxEx; BP = Below practical quantitation limit; IM = Below detection limit in impinger sample; NA = Not analyzed by this method; H = CAA HAP; N = Not a HAP or VOC as defined by US EPA; TM = Start and end times for THC and speciated compounds differ; QA = Failed quality assurance; MSF = 1000 square feet; ODTH = Oven Dried Tons per Hour; AI = Analytical Interference; MLF = 1000 Linear Feet; MCF = 1000 Cubic Feet

Table B63. Summary of Emission Test Results
Hardwood Veneer Dryer No. 3, White Oak Furnish, Green End Vent (400-3DV3)

Analyte		400-3DV3N1			400-3DV3N2			400-3DV3N3			Average Emission		
			ppmVd	lb/MSF		ppmVd	lb/MSF		ppmVd	lb/MSF		ppmVd	lb/MSF
acetaldehyde	(H)	BP	4.7E-01	8.8E-05	BP	9.6E-01	1.8E-04	BP	6.6E-01	1.1E-04		7.0E-01	1.3E-04
acetone	(N)	ND	2.5E-01	6.3E-05	IM	3.0E-01	7.6E-05	ND	3.4E-01	7.6E-05		1.0E-01	2.5E-05
acrolein	(H)	ND	2.4E-01	5.6E-05	ND	2.6E-01	6.4E-05	ND	3.2E-01	6.9E-05	ND	2.7E-01	6.3E-05
benzene	(H)	ND	8.0E-02	2.7E-05	ND	7.2E-02	2.5E-05	ND	1.6E-01	4.9E-05	ND	1.0E-01	3.3E-05
bromomethane	(H)	ND	8.0E-02	3.3E-05	ND	7.2E-02	3.0E-05	ND	1.6E-01	6.0E-05	ND	1.0E-01	4.1E-05
camphene		ND	1.6E+00	9.4E-04	ND	1.4E+00	8.6E-04	ND	3.2E+00	1.7E-03	ND	2.1E+00	1.2E-03
3-carene		ND	1.6E+00	9.4E-04	ND	1.4E+00	8.6E-04	ND	3.2E+00	1.7E-03	ND	2.1E+00	1.2E-03
chloroethane	(H)	ND	8.0E-02	2.2E-05	ND	7.2E-02	2.0E-05	ND	1.6E-01	4.0E-05	ND	1.0E-01	2.8E-05
chloroethene	(H)	ND	8.0E-02	2.2E-05	ND	7.2E-02	2.0E-05	ND	1.6E-01	3.9E-05	ND	1.0E-01	2.7E-05
cumene	(H)	ND	1.6E+00	8.3E-04	ND	1.4E+00	7.6E-04	ND	3.2E+00	1.5E-03	ND	2.1E+00	1.0E-03
p-cymene		ND	1.6E+00	9.2E-04	ND	1.4E+00	8.5E-04	ND	3.2E+00	1.7E-03	ND	2.1E+00	1.2E-03
1,2-dichloroethane	(H)	ND	8.0E-02	3.4E-05	ND	7.2E-02	3.1E-05	ND	1.6E-01	6.2E-05	ND	1.0E-01	4.2E-05
cis-1,2-dichloroethylene		ND	8.0E-02	3.3E-05	ND	7.2E-02	3.1E-05	ND	1.6E-01	6.1E-05	ND	1.0E-01	4.2E-05
formaldehyde	(H)	BP	2.8E-01	3.6E-05	BP	2.1E-01	2.8E-05	BP	2.0E-01	2.4E-05		2.3E-01	2.9E-05
limonene		ND	1.6E+00	9.4E-04	ND	1.4E+00	8.6E-04	ND	3.2E+00	1.7E-03	ND	2.1E+00	1.2E-03
p-mentha-1,5-diene		ND	1.6E+00	9.4E-04	ND	1.4E+00	8.6E-04	ND	3.2E+00	1.7E-03	ND	2.1E+00	1.2E-03
methanol	(H)		1.0E+01	1.4E-03		9.2E+00	1.3E-03		5.2E+00	6.4E-04		8.2E+00	1.1E-03
methyl ethyl ketone (MEK)	(H)	ND	2.3E-01	7.1E-05	ND	2.6E-01	8.1E-05	ND	3.1E-01	8.8E-05	ND	2.7E-01	8.0E-05
methyl isobutyl ketone	(H)	ND	1.7E-01	7.2E-05	ND	1.8E-01	7.8E-05	ND	2.5E-01	9.7E-05	ND	2.0E-01	8.2E-05
methylene chloride	(H)	ND	8.0E-02	2.9E-05	ND	7.2E-02	2.7E-05	ND	1.6E-01	5.3E-05	ND	1.0E-01	3.6E-05
phenol	(H)	ND	2.8E-01	1.1E-04	ND	3.2E-01	1.3E-04	ND	3.6E-01	1.3E-04	ND	3.2E-01	1.3E-04
alpha-pinene		ND	1.6E+00	9.4E-04	ND	1.4E+00	8.6E-04	ND	3.2E+00	1.7E-03	ND	2.1E+00	1.2E-03
beta-pinene		ND	1.6E+00	9.4E-04	ND	1.4E+00	8.6E-04	ND	3.2E+00	1.7E-03	ND	2.1E+00	1.2E-03
propionaldehyde	(H)	ND	2.5E-01	6.3E-05	ND	2.9E-01	7.3E-05	ND	3.4E-01	7.6E-05	ND	2.9E-01	7.1E-05
styrene	(H)	ND	8.0E-02	3.6E-05	ND	7.2E-02	3.3E-05	ND	1.6E-01	6.5E-05	ND	1.0E-01	4.5E-05
toluene	(H)	ND	8.0E-02	3.2E-05	ND	7.2E-02	2.9E-05	ND	1.6E-01	5.8E-05	ND	1.0E-01	4.0E-05
1,2,4-trichlorobenzene	(H)	ND	8.0E-02	6.3E-05	ND	7.2E-02	5.7E-05	ND	1.6E-01	1.1E-04	ND	1.0E-01	7.8E-05
m,p-xylene	(H)	ND	8.0E-02	3.7E-05	ND	7.2E-02	3.3E-05	ND	1.6E-01	6.7E-05	ND	1.0E-01	4.6E-05
o-xylene	(H)	ND	8.0E-02	3.7E-05	ND	7.2E-02	3.3E-05	ND	1.6E-01	6.7E-05	ND	1.0E-01	4.6E-05
THC as Carbon		TM	1.2E+02	6.3E-03	TM	1.1E+02	5.7E-03	TM	1.5E+02	6.9E-03		1.3E+02	6.3E-03
Total HAPs				1.5E-03			1.5E-03			7.8E-04			1.3E-03
Total Terpenes				0.0E+00			0.0E+00			0.0E+00			0.0E+00
Production Rate (MSF/hr)				18.2			19.2			21.2			19.5
Vol. Flow Rate (DSCFM)				5.0E+02			5.4E+02			5.3E+02			5.2E+02
Source Moisture (%)				4.3			5.3			7.8			5.8
Source Temp (°C)				125.8			124.4			117.7			122.6

ND x.xxEx = Below detection limit of x.xxEx; BP = Below practical quantitation limit; IM = Below detection limit in impinger sample; NA = Not analyzed by this method; H = CAA HAP; N = Not a HAP or VOC as defined by US EPA; TM = Start and end times for THC and speciated compounds differ; QA = Failed quality assurance; MSF = 1000 square feet; ODTH = Oven Dried Tons per Hour; AI = Analytical Interference; MLF = 1000 Linear Feet; MCF = 1000 Cubic Feet

12/9/99
9:13 AM

Table B64. Summary of Emission Test Results
Hardwood Veneer Dryer No. 3, Cherry Furnish, Cooling Section Vent (400-3DV1)

Analyte		400-3DV1N4			400-3DV1N5			400-3DV1N6			Average Emission		
			ppmVd	lb/MSF		ppmVd	lb/MSF		ppmVd	lb/MSF		ppmVd	lb/MSF
acetaldehyde	(H)	ND	3.8E-01	1.5E-03	ND	3.8E-01	1.6E-03	IM	3.9E-01	1.7E-03		1.3E-01	5.5E-04
acetone	(N)	IM	3.0E-01	1.5E-03	IM	3.5E-01	2.0E-03	IM	3.8E-01	2.1E-03		3.4E-01	1.9E-03
acrolein	(H)	ND	2.7E-01	1.3E-03	ND	2.7E-01	1.5E-03	ND	2.8E-01	1.5E-03	ND	2.7E-01	1.4E-03
benzene	(H)	ND	7.5E-02	5.3E-04	ND	7.6E-02	5.8E-04	ND	8.1E-02	6.1E-04	ND	7.8E-02	5.7E-04
bromomethane	(H)	ND	7.5E-02	6.4E-04	ND	7.6E-02	7.0E-04	ND	8.1E-02	7.4E-04	ND	7.8E-02	7.0E-04
camphene		ND	1.5E+00	1.8E-02	ND	1.5E+00	2.0E-02	ND	1.6E+00	2.1E-02	ND	1.6E+00	2.0E-02
3-carene		ND	1.5E+00	1.8E-02	ND	1.5E+00	2.0E-02	ND	1.6E+00	2.1E-02	ND	1.6E+00	2.0E-02
chloroethane	(H)	ND	7.5E-02	4.4E-04	ND	7.6E-02	4.8E-04	ND	8.1E-02	5.0E-04	ND	7.8E-02	4.7E-04
chloroethene	(H)	ND	7.5E-02	4.2E-04	ND	7.6E-02	4.6E-04	ND	8.1E-02	4.9E-04	ND	7.8E-02	4.6E-04
cumene	(H)	ND	1.5E+00	1.6E-02	ND	1.5E+00	1.8E-02	ND	1.6E+00	1.9E-02	ND	1.6E+00	1.8E-02
p-cymene		ND	1.5E+00	1.8E-02	ND	1.5E+00	2.0E-02	ND	1.6E+00	2.1E-02	ND	1.6E+00	2.0E-02
1,2-dichloroethane	(H)	ND	7.5E-02	6.7E-04	ND	7.6E-02	7.3E-04	ND	8.1E-02	7.7E-04	ND	7.8E-02	7.3E-04
cis-1,2-dichloroethylene		ND	7.5E-02	6.6E-04	ND	7.6E-02	7.2E-04	ND	8.1E-02	7.6E-04	ND	7.8E-02	7.1E-04
formaldehyde	(H)	ND	1.5E-01	4.0E-04	BP	2.6E-01	7.7E-04	ND	1.5E-01	4.4E-04		8.8E-02	2.6E-04
limonene		ND	1.5E+00	1.8E-02	ND	1.5E+00	2.0E-02	ND	1.6E+00	2.1E-02	ND	1.6E+00	2.0E-02
p-mentha-1,5-diene		ND	1.5E+00	1.8E-02	ND	1.5E+00	2.0E-02	ND	1.6E+00	2.1E-02	ND	1.6E+00	2.0E-02
methanol	(H)	ND	4.9E-01	1.4E-03	ND	5.0E-01	1.6E-03	ND	5.1E-01	1.6E-03	ND	5.0E-01	1.5E-03
methyl ethyl ketone (MEK)	(H)	ND	2.6E-01	1.7E-03	ND	2.6E-01	1.8E-03	ND	2.7E-01	1.9E-03	ND	2.7E-01	1.8E-03
methyl isobutyl ketone	(H)	ND	1.8E-01	1.6E-03	ND	1.8E-01	1.8E-03	ND	1.9E-01	1.8E-03	ND	1.9E-01	1.8E-03
methylene chloride	(H)	ND	7.5E-02	5.8E-04	ND	7.6E-02	6.3E-04	ND	8.1E-02	6.6E-04	ND	7.8E-02	6.2E-04
phenol	(H)	ND	3.2E-01	2.7E-03	ND	3.3E-01	3.0E-03	ND	3.3E-01	3.0E-03	ND	3.3E-01	2.9E-03
alpha-pinene		ND	1.5E+00	1.8E-02	ND	1.5E+00	2.0E-02	ND	1.6E+00	2.1E-02	ND	1.6E+00	2.0E-02
beta-pinene		ND	1.5E+00	1.8E-02	ND	1.5E+00	2.0E-02	ND	1.6E+00	2.1E-02	ND	1.6E+00	2.0E-02
propionaldehyde	(H)	ND	2.9E-01	1.5E-03	ND	2.9E-01	1.7E-03	ND	3.0E-01	1.7E-03	ND	3.0E-01	1.6E-03
styrene	(H)	ND	7.5E-02	7.1E-04	ND	7.6E-02	7.7E-04	ND	8.1E-02	8.2E-04	ND	7.8E-02	7.6E-04
toluene	(H)	ND	7.5E-02	6.2E-04	ND	7.6E-02	6.8E-04	ND	8.1E-02	7.2E-04	ND	7.8E-02	6.8E-04
1,2,4-trichlorobenzene	(H)	ND	7.5E-02	1.2E-03	ND	7.6E-02	1.3E-03	ND	8.1E-02	1.4E-03	ND	7.8E-02	1.3E-03
m,p-xylene	(H)	ND	7.5E-02	7.2E-04	ND	7.6E-02	7.8E-04	ND	8.1E-02	8.3E-04	ND	7.8E-02	7.8E-04
o-xylene	(H)	ND	7.5E-02	7.2E-04	ND	7.6E-02	7.8E-04	ND	8.1E-02	8.3E-04	ND	7.8E-02	7.8E-04
THC as Carbon		NA				6.6E+01	7.7E-02		6.4E+01	7.4E-02		6.5E+01	7.5E-02
Total HAPs				0.0E+00			7.7E-04			1.7E-03			8.1E-04
Total Terpenes				0.0E+00			0.0E+00			0.0E+00			0.0E+00
Production Rate (MSF/hr)				29.3			26.7			27.4			27.8
Vol. Flow Rate (DSCFM)				1.7E+04			1.7E+04			1.7E+04			1.7E+04
Source Moisture (%)				1.7			1.8			1.7			1.7
Source Temp (°C)				22.9			24.6			26.3			24.6

ND x.xxEx = Below detection limit of x.xxEx; BP = Below practical quantitation limit; IM = Below detection limit in impinger sample; NA = Not analyzed by this method; H = CAA HAP; N = Not a HAP or VOC as defined by US EPA; TM = Start and end times for THC and speciated compounds differ; QA = Failed quality assurance; MSF = 1000 square feet; ODTH = Oven Dried Tons per Hour; AI = Analytical Interference; MLF = 1000 Linear Feet; MCF = 1000 Cubic Feet

Table B65. Summary of Emission Test Results
Hardwood Veneer Dryer No. 3, Cherry Furnish, Dry End Vent (400-3DV2)

Analyte		400-3DV2N4			400-3DV2N5			400-3DV2N6			Average Emission		
			ppmVd	lb/MSF		ppmVd	lb/MSF		ppmVd	lb/MSF		ppmVd	lb/MSF
acetaldehyde	(H)	BP	5.4E-01	4.7E-05	BP	6.2E-01	6.0E-05	BP	7.7E-01	7.3E-05		6.4E-01	6.0E-05
acetone	(N)	IM	2.9E-01	3.3E-05	IM	3.3E-01	4.2E-05	IM	3.4E-01	4.2E-05		3.2E-01	3.9E-05
acrolein	(H)	ND	2.4E-01	2.6E-05	ND	2.8E-01	3.5E-05	ND	2.9E-01	3.4E-05	ND	2.7E-01	3.2E-05
benzene	(H)	ND	7.4E-02	1.1E-05	ND	8.3E-02	1.4E-05	ND	8.1E-02	1.4E-05	ND	7.9E-02	1.3E-05
bromomethane	(H)	ND	7.4E-02	1.4E-05	ND	8.3E-02	1.7E-05	ND	8.1E-02	1.6E-05	ND	7.9E-02	1.6E-05
camphene		ND	1.5E+00	3.9E-04	ND	1.7E+00	5.0E-04	ND	1.6E+00	4.7E-04	ND	1.6E+00	4.6E-04
3-carene		ND	1.5E+00	3.9E-04	ND	1.7E+00	5.0E-04	ND	1.6E+00	4.7E-04	ND	1.6E+00	4.6E-04
chloroethane	(H)	ND	7.4E-02	9.3E-06	ND	8.3E-02	1.2E-05	ND	8.1E-02	1.1E-05	ND	7.9E-02	1.1E-05
chloroethene	(H)	ND	7.4E-02	9.0E-06	ND	8.3E-02	1.1E-05	ND	8.1E-02	1.1E-05	ND	7.9E-02	1.0E-05
cumene	(H)	ND	1.5E+00	3.5E-04	ND	1.7E+00	4.4E-04	ND	1.6E+00	4.2E-04	ND	1.6E+00	4.0E-04
p-cymene		ND	1.5E+00	3.9E-04	ND	1.7E+00	4.9E-04	ND	1.6E+00	4.7E-04	ND	1.6E+00	4.5E-04
1,2-dichloroethane	(H)	ND	7.4E-02	1.4E-05	ND	8.3E-02	1.8E-05	ND	8.1E-02	1.7E-05	ND	7.9E-02	1.7E-05
cis-1,2-dichloroethylene		ND	7.4E-02	1.4E-05	ND	8.3E-02	1.8E-05	ND	8.1E-02	1.7E-05	ND	7.9E-02	1.6E-05
formaldehyde	(H)	BP	1.5E-01	8.6E-06	BP	1.7E-01	1.2E-05	ND	1.6E-01	1.0E-05		1.1E-01	6.7E-06
limonene		ND	1.5E+00	3.9E-04	ND	1.7E+00	5.0E-04	ND	1.6E+00	4.7E-04	ND	1.6E+00	4.6E-04
p-mentha-1,5-diene		ND	1.5E+00	3.9E-04	ND	1.7E+00	5.0E-04	ND	1.6E+00	4.7E-04	ND	1.6E+00	4.6E-04
methanol	(H)		1.8E+00	1.2E-04		1.9E+00	1.4E-04		1.6E+00	1.1E-04		1.8E+00	1.2E-04
methyl ethyl ketone (MEK)	(H)	ND	2.3E-01	3.3E-05	ND	2.8E-01	4.4E-05	ND	2.8E-01	4.3E-05	ND	2.6E-01	4.0E-05
methyl isobutyl ketone	(H)	ND	1.7E-01	3.3E-05	ND	2.0E-01	4.3E-05	ND	2.0E-01	4.2E-05	ND	1.9E-01	3.9E-05
methylene chloride	(H)	ND	7.4E-02	1.2E-05	ND	8.3E-02	1.6E-05	ND	8.1E-02	1.5E-05	ND	7.9E-02	1.4E-05
phenol	(H)	ND	2.9E-01	5.3E-05	ND	3.4E-01	7.1E-05	ND	3.5E-01	7.0E-05	ND	3.3E-01	6.5E-05
alpha-pinene		ND	1.5E+00	3.9E-04	ND	1.7E+00	5.0E-04	ND	1.6E+00	4.7E-04	ND	1.6E+00	4.6E-04
beta-pinene		ND	1.5E+00	3.9E-04	ND	1.7E+00	5.0E-04	ND	1.6E+00	4.7E-04	ND	1.6E+00	4.6E-04
propionaldehyde	(H)	ND	2.6E-01	3.0E-05	ND	3.1E-01	4.0E-05	ND	3.1E-01	3.9E-05	ND	2.9E-01	3.6E-05
styrene	(H)	ND	7.4E-02	1.5E-05	ND	8.3E-02	1.9E-05	ND	8.1E-02	1.8E-05	ND	7.9E-02	1.7E-05
toluene	(H)	ND	7.4E-02	1.3E-05	ND	8.3E-02	1.7E-05	ND	8.1E-02	1.6E-05	ND	7.9E-02	1.5E-05
1,2,4-trichlorobenzene	(H)	ND	7.4E-02	2.6E-05	ND	8.3E-02	3.3E-05	ND	8.1E-02	3.1E-05	ND	7.9E-02	3.0E-05
m,p-xylene	(H)	ND	7.4E-02	1.5E-05	ND	8.3E-02	1.9E-05	ND	8.1E-02	1.8E-05	ND	7.9E-02	1.8E-05
o-xylene	(H)	ND	7.4E-02	1.5E-05	ND	8.3E-02	1.9E-05	ND	8.1E-02	1.8E-05	ND	7.9E-02	1.8E-05
THC as Carbon			3.6E+01	8.6E-04		3.7E+01	9.9E-04		3.5E+01	9.1E-04		3.6E+01	9.2E-04
Total HAPs				1.7E-04			2.1E-04			1.8E-04			1.9E-04
Total Terpenes				0.0E+00			0.0E+00			0.0E+00			0.0E+00
Production Rate (MSF/hr)				29.3			26.7			27.4			27.8
Vol. Flow Rate (DSCFM)				3.7E+02			3.8E+02			3.7E+02			3.7E+02
Source Moisture (%)				9.2			8.5			9.8			9.1
Source Temp (°C)				114.9			113.1			112.0			113.3

ND x.xxEx = Below detection limit of x.xxEx; BP = Below practical quantitation limit; IM = Below detection limit in impinger sample; NA = Not analyzed by this method; H = CAA HAP; N = Not a HAP or VOC as defined by US EPA; TM = Start and end times for THC and speciated compounds differ; QA = Failed quality assurance; MSF = 1000 square feet; ODTH = Oven Dried Tons per Hour; AI = Analytical Interference; MLF = 1000 Linear Feet; MCF = 1000 Cubic Feet

12/9/99
9:13 AM

Table B66. Summary of Emission Test Results
Hardwood Veneer Dryer No. 3, Cherry Furnish, Green End Vent (400-3DV3)

Analyte		400-3DV3N4			400-3DV3N5			400-3DV3N6			Average Emission		
			ppmVd	lb/MSF		ppmVd	lb/MSF		ppmVd	lb/MSF		ppmVd	lb/MSF
acetaldehyde	(H)	BP	7.6E-01	9.4E-05	BP	7.5E-01	1.1E-04	BP	5.5E-01	7.6E-05		6.9E-01	9.2E-05
acetone	(N)	ND	2.6E-01	4.2E-05	IM	2.7E-01	5.0E-05	IM	3.0E-01	5.5E-05		1.9E-01	3.5E-05
acrolein	(H)	ND	2.4E-01	3.7E-05	ND	2.5E-01	4.4E-05	ND	2.5E-01	4.4E-05	ND	2.4E-01	4.2E-05
benzene	(H)	ND	7.6E-02	1.7E-05	ND	7.8E-02	1.9E-05	ND	7.9E-02	1.9E-05	ND	7.8E-02	1.8E-05
bromomethane	(H)	ND	7.6E-02	2.0E-05	ND	7.8E-02	2.4E-05	ND	7.9E-02	2.4E-05	ND	7.8E-02	2.2E-05
camphene		ND	1.5E+00	5.8E-04	ND	1.6E+00	6.8E-04	ND	1.6E+00	6.8E-04	ND	1.6E+00	6.4E-04
3-carene		ND	1.5E+00	5.8E-04	ND	1.6E+00	6.8E-04	ND	1.6E+00	6.8E-04	ND	1.6E+00	6.4E-04
chloroethane	(H)	ND	7.6E-02	1.4E-05	ND	7.8E-02	1.6E-05	ND	7.9E-02	1.6E-05	ND	7.8E-02	1.5E-05
chloroethene	(H)	ND	7.6E-02	1.3E-05	ND	7.8E-02	1.6E-05	ND	7.9E-02	1.6E-05	ND	7.8E-02	1.5E-05
cumene	(H)	ND	1.5E+00	5.1E-04	ND	1.6E+00	6.0E-04	ND	1.6E+00	6.0E-04	ND	1.6E+00	5.7E-04
p-cymene		ND	1.5E+00	5.7E-04	ND	1.6E+00	6.7E-04	ND	1.6E+00	6.7E-04	ND	1.6E+00	6.4E-04
1,2-dichloroethane	(H)	ND	7.6E-02	2.1E-05	ND	7.8E-02	2.5E-05	ND	7.9E-02	2.5E-05	ND	7.8E-02	2.3E-05
cis-1,2-dichloroethylene		ND	7.6E-02	2.1E-05	ND	7.8E-02	2.4E-05	ND	7.9E-02	2.4E-05	ND	7.8E-02	2.3E-05
formaldehyde	(H)	BP	2.3E-01	1.9E-05	BP	2.0E-01	1.9E-05	BP	1.7E-01	1.6E-05		2.0E-01	1.8E-05
limonene		ND	1.5E+00	5.8E-04	ND	1.6E+00	6.8E-04	ND	1.6E+00	6.8E-04	ND	1.6E+00	6.4E-04
p-mentha-1,5-diene		ND	1.5E+00	5.8E-04	ND	1.6E+00	6.8E-04	ND	1.6E+00	6.8E-04	ND	1.6E+00	6.4E-04
methanol	(H)		5.0E+00	4.5E-04		6.1E+00	6.2E-04		5.2E+00	5.3E-04		5.4E+00	5.3E-04
methyl ethyl ketone (MEK)	(H)	ND	2.3E-01	4.7E-05	ND	2.4E-01	5.6E-05	ND	2.4E-01	5.5E-05	ND	2.4E-01	5.3E-05
methyl isobutyl ketone	(H)	ND	1.7E-01	4.6E-05	ND	1.7E-01	5.5E-05	ND	1.7E-01	5.5E-05	ND	1.7E-01	5.2E-05
methylene chloride	(H)	ND	7.6E-02	1.8E-05	ND	7.8E-02	2.1E-05	ND	7.9E-02	2.1E-05	ND	7.8E-02	2.0E-05
phenol	(H)	ND	2.8E-01	7.5E-05	ND	3.0E-01	8.9E-05	ND	3.0E-01	8.8E-05	ND	2.9E-01	8.4E-05
alpha-pinene		ND	1.5E+00	5.8E-04	ND	1.6E+00	6.8E-04	ND	1.6E+00	6.8E-04	ND	1.6E+00	6.4E-04
beta-pinene		ND	1.5E+00	5.8E-04	ND	1.6E+00	6.8E-04	ND	1.6E+00	6.8E-04	ND	1.6E+00	6.4E-04
propionaldehyde	(H)	ND	2.6E-01	4.2E-05	ND	2.7E-01	5.0E-05	ND	2.7E-01	4.9E-05	ND	2.6E-01	4.7E-05
styrene	(H)	ND	7.6E-02	2.2E-05	ND	7.8E-02	2.6E-05	ND	7.9E-02	2.6E-05	ND	7.8E-02	2.5E-05
toluene	(H)	ND	7.6E-02	2.0E-05	ND	7.8E-02	2.3E-05	ND	7.9E-02	2.3E-05	ND	7.8E-02	2.2E-05
1,2,4-trichlorobenzene	(H)	ND	7.6E-02	3.9E-05	ND	7.8E-02	4.5E-05	ND	7.9E-02	4.5E-05	ND	7.8E-02	4.3E-05
m,p-xylene	(H)	ND	7.6E-02	2.3E-05	ND	7.8E-02	2.6E-05	ND	7.9E-02	2.6E-05	ND	7.8E-02	2.5E-05
o-xylene	(H)	ND	7.6E-02	2.3E-05	ND	7.8E-02	2.6E-05	ND	7.9E-02	2.6E-05	ND	7.8E-02	2.5E-05
THC as Carbon			7.5E+01	2.5E-03	NA			NA				7.5E+01	2.5E-03
Total HAPs				5.6E-04			7.4E-04			6.2E-04			6.4E-04
Total Terpenes				0.0E+00			0.0E+00			0.0E+00			0.0E+00
Production Rate (MSF/hr)				29.3			26.7			27.4			27.8
Vol. Flow Rate (DSCFM)				5.3E+02			5.5E+02			5.6E+02			5.4E+02
Source Moisture (%)				7.0			8.3			9.1			8.1
Source Temp (°C)				119.1			119.2			119.7			119.3

ND x.xxEx = Below detection limit of x.xxEx; BP = Below practical quantitation limit; IM = Below detection limit in impinger sample; NA = Not analyzed by this method; H = CAA HAP; N = Not a HAP or VOC as defined by US EPA; TM = Start and end times for THC and speciated compounds differ; QA = Failed quality assurance; MSF = 1000 square feet; ODTH = Oven Dried Tons per Hour; AI = Analytical Interference; MLF = 1000 Linear Feet; MCF = 1000 Cubic Feet

Table B67. Summary of Emission Test Results
Hardwood Veneer Dryer No. 4, Red Oak Furnish, Cooling Section Vent (400-4DV1)

Analyte		400-4DV1N1			400-4DV1N2			400-4DV1N3			Average Emission		
			ppmVd	lb/MSF		ppmVd	lb/MSF		ppmVd	lb/MSF		ppmVd	lb/MSF
acetaldehyde	(H)	ND	3.3E-01	1.4E-03	ND	4.0E-01	1.9E-03	BP	5.2E-01	2.1E-03		1.7E-01	7.1E-04
acetone	(N)	ND	2.6E-01	1.4E-03	IM	3.2E-01	1.9E-03	IM	3.4E-01	1.8E-03		2.2E-01	1.3E-03
acrolein	(H)	ND	2.4E-01	1.2E-03	ND	2.8E-01	1.6E-03	ND	2.5E-01	1.3E-03	ND	2.6E-01	1.4E-03
benzene	(H)	ND	7.7E-02	5.6E-04	ND	7.3E-02	5.9E-04	ND	8.3E-02	6.1E-04	ND	7.8E-02	5.9E-04
bromomethane	(H)	ND	7.7E-02	6.8E-04	ND	7.3E-02	7.2E-04	ND	8.3E-02	7.4E-04	ND	7.8E-02	7.1E-04
camphene		ND	1.5E+00	1.9E-02	ND	1.5E+00	2.1E-02	ND	1.7E+00	2.1E-02	ND	1.6E+00	2.0E-02
3-carene		ND	1.5E+00	1.9E-02	ND	1.5E+00	2.1E-02	ND	1.7E+00	2.1E-02	ND	1.6E+00	2.0E-02
chloroethane	(H)	ND	7.7E-02	4.6E-04	ND	7.3E-02	4.9E-04	ND	8.3E-02	5.0E-04	ND	7.8E-02	4.8E-04
chloroethene	(H)	ND	7.7E-02	4.5E-04	ND	7.3E-02	4.8E-04	ND	8.3E-02	4.9E-04	ND	7.8E-02	4.7E-04
cumene	(H)	ND	1.5E+00	1.7E-02	ND	1.5E+00	1.8E-02	ND	1.7E+00	1.9E-02	ND	1.6E+00	1.8E-02
p-cymene		ND	1.5E+00	1.9E-02	ND	1.5E+00	2.0E-02	ND	1.7E+00	2.1E-02	ND	1.6E+00	2.0E-02
1,2-dichloroethane	(H)	ND	7.7E-02	7.1E-04	ND	7.3E-02	7.5E-04	ND	8.3E-02	7.7E-04	ND	7.8E-02	7.4E-04
cis-1,2-dichloroethylene		ND	7.7E-02	6.9E-04	ND	7.3E-02	7.4E-04	ND	8.3E-02	7.5E-04	ND	7.8E-02	7.3E-04
formaldehyde	(H)	ND	1.2E-01	3.5E-04	ND	1.6E-01	5.1E-04	ND	1.3E-01	3.6E-04	ND	1.4E-01	4.1E-04
limonene		ND	1.5E+00	1.9E-02	ND	1.5E+00	2.1E-02	ND	1.7E+00	2.1E-02	ND	1.6E+00	2.0E-02
p-mentha-1,5-diene		ND	1.5E+00	1.9E-02	ND	1.5E+00	2.1E-02	ND	1.7E+00	2.1E-02	ND	1.6E+00	2.0E-02
methanol	(H)	ND	4.3E-01	1.3E-03	ND	5.3E-01	1.8E-03	ND	4.5E-01	1.3E-03	ND	4.7E-01	1.5E-03
methyl ethyl ketone (MEK)	(H)	ND	2.3E-01	1.6E-03	ND	2.7E-01	2.1E-03	ND	2.4E-01	1.7E-03	ND	2.5E-01	1.8E-03
methyl isobutyl ketone	(H)	ND	1.7E-01	1.6E-03	ND	1.9E-01	2.0E-03	BP	2.1E-01	2.0E-03		7.1E-02	6.6E-04
methylene chloride	(H)	ND	7.7E-02	6.1E-04	ND	7.3E-02	6.5E-04	ND	8.3E-02	6.6E-04	ND	7.8E-02	6.4E-04
phenol	(H)	ND	2.8E-01	2.5E-03	ND	3.4E-01	3.3E-03	ND	3.0E-01	2.6E-03	ND	3.1E-01	2.8E-03
alpha-pinene		ND	1.5E+00	1.9E-02	ND	1.5E+00	2.1E-02	ND	1.7E+00	2.1E-02	ND	1.6E+00	2.0E-02
beta-pinene		ND	1.5E+00	1.9E-02	ND	1.5E+00	2.1E-02	ND	1.7E+00	2.1E-02	ND	1.6E+00	2.0E-02
propionaldehyde	(H)	ND	2.6E-01	1.4E-03	ND	3.1E-01	1.9E-03	ND	2.7E-01	1.5E-03	ND	2.8E-01	1.6E-03
styrene	(H)	ND	7.7E-02	7.4E-04	ND	7.3E-02	7.9E-04	ND	8.3E-02	8.1E-04	ND	7.8E-02	7.8E-04
toluene	(H)	ND	7.7E-02	6.6E-04	ND	7.3E-02	7.0E-04	ND	8.3E-02	7.2E-04	ND	7.8E-02	6.9E-04
1,2,4-trichlorobenzene	(H)	ND	7.7E-02	1.3E-03	ND	7.3E-02	1.4E-03	ND	8.3E-02	1.4E-03	ND	7.8E-02	1.4E-03
m,p-xylene	(H)	ND	7.7E-02	7.6E-04	ND	7.3E-02	8.1E-04	ND	8.3E-02	8.3E-04	ND	7.8E-02	8.0E-04
o-xylene	(H)	ND	7.7E-02	7.6E-04	ND	7.3E-02	8.1E-04	ND	8.3E-02	8.3E-04	ND	7.8E-02	8.0E-04
THC as Carbon		NA			TM	7.0E+00	8.8E-03	NA				7.0E+00	8.8E-03
Total HAPs				0.0E+00			0.0E+00			4.1E-03			1.4E-03
Total Terpenes				0.0E+00			0.0E+00			0.0E+00			0.0E+00
Production Rate (MSF/hr)				17.6			16.4			19.1			17.7
Vol. Flow Rate (DSCFM)				1.1E+04			1.1E+04			1.2E+04			1.1E+04
Source Moisture (%)				1.8			1.9			1.9			1.8
Source Temp (°C)				30.4			31.7			32.7			31.6

ND x.xxEx = Below detection limit of x.xxEx; BP = Below practical quantitation limit; IM = Below detection limit in impinger sample; NA = Not analyzed by this method; H = CAA HAP; N = Not a HAP or VOC as defined by US EPA; TM = Start and end times for THC and speciated compounds differ; QA = Failed quality assurance; MSF = 1000 square feet; ODTH = Oven Dried Tons per Hour; AI = Analytical Interference; MLF = 1000 Linear Feet; MCF = 1000 Cubic Feet

12/9/99
9:13 AM

Table B68. Summary of Emission Test Results
Hardwood Veneer Dryer No. 4, Red Oak Furnish, Dry End Vent (400-4DV2)

Analyte		400-4DV2N1			400-4DV2N2			400-4DV2N3			Average Emission		
			ppmVd	lb/MSF		ppmVd	lb/MSF		ppmVd	lb/MSF		ppmVd	lb/MSF
acetaldehyde	(H)	ND	4.0E-01	8.5E-06	BP	5.3E-01	1.3E-05	ND	3.8E-01	6.9E-06		1.8E-01	4.2E-06
acetone	(N)	IM	3.7E-01	1.0E-05	IM	3.6E-01	1.1E-05	IM	4.0E-01	9.7E-06		3.8E-01	1.0E-05
acrolein	(H)	ND	2.8E-01	7.6E-06	ND	2.6E-01	8.0E-06	ND	2.7E-01	6.2E-06	ND	2.7E-01	7.3E-06
benzene	(H)	ND	8.4E-02	3.2E-06	ND	8.1E-02	3.4E-06	ND	8.6E-02	2.8E-06	ND	8.4E-02	3.1E-06
bromomethane	(H)	ND	8.4E-02	3.8E-06	ND	8.1E-02	4.2E-06	ND	8.6E-02	3.4E-06	ND	8.4E-02	3.8E-06
camphene		ND	1.7E+00	1.1E-04	ND	1.6E+00	1.2E-04	ND	1.7E+00	9.7E-05	ND	1.7E+00	1.1E-04
3-carene		ND	1.7E+00	1.1E-04	ND	1.6E+00	1.2E-04	ND	1.7E+00	9.7E-05	ND	1.7E+00	1.1E-04
chloroethane	(H)	ND	8.4E-02	2.6E-06	ND	8.1E-02	2.8E-06	ND	8.6E-02	2.3E-06	ND	8.4E-02	2.6E-06
chloroethene	(H)	ND	8.4E-02	2.5E-06	ND	8.1E-02	2.7E-06	ND	8.6E-02	2.2E-06	ND	8.4E-02	2.5E-06
cumene	(H)	ND	1.7E+00	9.7E-05	ND	1.6E+00	1.1E-04	ND	1.7E+00	8.5E-05	ND	1.7E+00	9.6E-05
p-cymene		ND	1.7E+00	1.1E-04	ND	1.6E+00	1.2E-04	ND	1.7E+00	9.5E-05	ND	1.7E+00	1.1E-04
1,2-dichloroethane	(H)	ND	8.4E-02	4.0E-06	ND	8.1E-02	4.3E-06	ND	8.6E-02	3.5E-06	ND	8.4E-02	4.0E-06
cis-1,2-dichloroethylene		ND	8.4E-02	3.9E-06	ND	8.1E-02	4.3E-06	ND	8.6E-02	3.4E-06	ND	8.4E-02	3.9E-06
formaldehyde	(H)		5.9E-01	8.5E-06	BP	4.3E-01	6.9E-06	BP	2.7E-01	3.3E-06		4.3E-01	6.3E-06
limonene		ND	1.7E+00	1.1E-04	ND	1.6E+00	1.2E-04	ND	1.7E+00	9.7E-05	ND	1.7E+00	1.1E-04
p-mentha-1,5-diene		ND	1.7E+00	1.1E-04	ND	1.6E+00	1.2E-04	ND	1.7E+00	9.7E-05	ND	1.7E+00	1.1E-04
methanol	(H)		5.2E+00	8.0E-05		5.2E+00	9.0E-05		6.0E+00	8.0E-05		5.5E+00	8.3E-05
methyl ethyl ketone (MEK)	(H)	ND	2.8E-01	9.6E-06	ND	2.6E-01	1.0E-05	ND	2.6E-01	7.9E-06	ND	2.7E-01	9.2E-06
methyl isobutyl ketone	(H)	ND	2.0E-01	9.4E-06	ND	1.8E-01	9.9E-06	ND	1.9E-01	7.8E-06	ND	1.9E-01	9.1E-06
methylene chloride	(H)	ND	8.4E-02	3.4E-06	ND	8.1E-02	3.7E-06	ND	8.6E-02	3.0E-06	ND	8.4E-02	3.4E-06
phenol	(H)	ND	3.4E-01	1.5E-05	ND	3.2E-01	1.6E-05	ND	3.2E-01	1.3E-05	ND	3.3E-01	1.5E-05
alpha-pinene		ND	1.7E+00	1.1E-04	ND	1.6E+00	1.2E-04	ND	1.7E+00	9.7E-05	ND	1.7E+00	1.1E-04
beta-pinene		ND	1.7E+00	1.1E-04	ND	1.6E+00	1.2E-04	ND	1.7E+00	9.7E-05	ND	1.7E+00	1.1E-04
propionaldehyde	(H)	ND	3.1E-01	8.6E-06	ND	2.9E-01	9.0E-06	ND	2.9E-01	7.0E-06	ND	3.0E-01	8.2E-06
styrene	(H)	ND	8.4E-02	4.2E-06	ND	8.1E-02	4.6E-06	ND	8.6E-02	3.7E-06	ND	8.4E-02	4.2E-06
toluene	(H)	ND	8.4E-02	3.7E-06	ND	8.1E-02	4.0E-06	ND	8.6E-02	3.3E-06	ND	8.4E-02	3.7E-06
1,2,4-trichlorobenzene	(H)	ND	8.4E-02	7.3E-06	ND	8.1E-02	8.0E-06	ND	8.6E-02	6.4E-06	ND	8.4E-02	7.2E-06
m,p-xylene	(H)	ND	8.4E-02	4.3E-06	ND	8.1E-02	4.7E-06	ND	8.6E-02	3.8E-06	ND	8.4E-02	4.2E-06
o-xylene	(H)	ND	8.4E-02	4.3E-06	ND	8.1E-02	4.7E-06	ND	8.6E-02	3.8E-06	ND	8.4E-02	4.2E-06
THC as Carbon			1.6E+02	9.0E-04		1.2E+02	7.5E-04	TM	1.6E+02	8.0E-04		1.4E+02	8.2E-04
Total HAPs				8.8E-05			1.1E-04			8.3E-05			9.4E-05
Total Terpenes				0.0E+00			0.0E+00			0.0E+00			0.0E+00
Production Rate (MSF/hr)				17.6			16.4			19.1			17.7
Vol. Flow Rate (DSCFM)				5.5E+01			5.7E+01			5.1E+01			5.4E+01
Source Moisture (%)				10.4			11.3			13.7			11.8
Source Temp (°C)				106.5			115.9			115.8			112.7

ND x.xxEx = Below detection limit of x.xxEx; BP = Below practical quantitation limit; IM = Below detection limit in impinger sample; NA = Not analyzed by this method; H = CAA HAP; N = Not a HAP or VOC as defined by US EPA; TM = Start and end times for THC and speciated compounds differ; QA = Failed quality assurance; MSF = 1000 square feet; ODTH = Oven Dried Tons per Hour; AI = Analytical Interference; MLF = 1000 Linear Feet; MCF = 1000 Cubic Feet

Table B69. Summary of Emission Test Results
Hardwood Veneer Dryer No. 4, Red Oak Furnish, Green End Vent (400-4DV3)

Analyte		400-4DV3N1			400-4DV3N2			400-4DV3N3			Average Emission		
			ppmVd	lb/MSF		ppmVd	lb/MSF		ppmVd	lb/MSF		ppmVd	lb/MSF
acetaldehyde	(H)	BP	4.6E-01	2.1E-04	IM	4.4E-01	2.2E-04	BP	7.9E-01	3.3E-04		5.6E-01	2.6E-04
acetone	(N)	IM	3.5E-01	2.1E-04	IM	3.4E-01	2.2E-04	IM	3.5E-01	2.0E-04		3.5E-01	2.1E-04
acrolein	(H)	ND	2.7E-01	1.6E-04	ND	2.9E-01	1.8E-04	ND	2.8E-01	1.5E-04	ND	2.8E-01	1.6E-04
benzene	(H)	ND	7.8E-02	6.4E-05	ND	8.1E-02	7.2E-05	ND	7.9E-02	5.9E-05	ND	8.0E-02	6.5E-05
bromomethane	(H)	ND	7.8E-02	7.8E-05	ND	8.1E-02	8.7E-05	ND	7.9E-02	7.2E-05	ND	8.0E-02	7.9E-05
camphene		ND	1.6E+00	2.2E-03	ND	1.6E+00	2.5E-03	ND	1.6E+00	2.1E-03	ND	1.6E+00	2.3E-03
3-carene		ND	1.6E+00	2.2E-03	ND	1.6E+00	2.5E-03	ND	1.6E+00	2.1E-03	ND	1.6E+00	2.3E-03
chloroethane	(H)	ND	7.8E-02	5.3E-05	ND	8.1E-02	5.9E-05	ND	7.9E-02	4.9E-05	ND	8.0E-02	5.4E-05
chloroethene	(H)	ND	7.8E-02	5.2E-05	ND	8.1E-02	5.8E-05	ND	7.9E-02	4.7E-05	ND	8.0E-02	5.2E-05
cumene	(H)	ND	1.6E+00	2.0E-03	ND	1.6E+00	2.2E-03	ND	1.6E+00	1.8E-03	ND	1.6E+00	2.0E-03
p-cymene		ND	1.6E+00	2.2E-03	ND	1.6E+00	2.5E-03	ND	1.6E+00	2.0E-03	ND	1.6E+00	2.2E-03
1,2-dichloroethane	(H)	ND	7.8E-02	8.2E-05	ND	8.1E-02	9.1E-05	ND	7.9E-02	7.5E-05	ND	8.0E-02	8.3E-05
cis-1,2-dichloroethylene		ND	7.8E-02	8.0E-05	ND	8.1E-02	8.9E-05	ND	7.9E-02	7.3E-05	ND	8.0E-02	8.1E-05
formaldehyde	(H)	BP	2.6E-01	8.2E-05	BP	2.0E-01	6.9E-05	BP	2.1E-01	6.1E-05		2.2E-01	7.0E-05
limonene		ND	1.6E+00	2.2E-03	ND	1.6E+00	2.5E-03	ND	1.6E+00	2.1E-03	ND	1.6E+00	2.3E-03
p-mentha-1,5-diene		ND	1.6E+00	2.2E-03	ND	1.6E+00	2.5E-03	ND	1.6E+00	2.1E-03	ND	1.6E+00	2.3E-03
methanol	(H)		8.0E+00	2.7E-03		7.9E+00	2.9E-03		1.1E+01	3.3E-03		8.9E+00	3.0E-03
methyl ethyl ketone (MEK)	(H)	ND	2.6E-01	2.0E-04	ND	2.8E-01	2.3E-04	ND	2.8E-01	1.9E-04	ND	2.7E-01	2.1E-04
methyl isobutyl ketone	(H)	ND	1.9E-01	2.0E-04	ND	2.0E-01	2.2E-04	ND	1.9E-01	1.8E-04	ND	1.9E-01	2.0E-04
methylene chloride	(H)	ND	7.8E-02	7.0E-05	ND	8.1E-02	7.8E-05	ND	7.9E-02	6.4E-05	ND	8.0E-02	7.1E-05
phenol	(H)	ND	3.2E-01	3.2E-04	ND	3.4E-01	3.7E-04	ND	3.4E-01	3.1E-04	ND	3.4E-01	3.3E-04
alpha-pinene		ND	1.6E+00	2.2E-03	ND	1.6E+00	2.5E-03	ND	1.6E+00	2.1E-03	ND	1.6E+00	2.3E-03
beta-pinene		ND	1.6E+00	2.2E-03	ND	1.6E+00	2.5E-03	ND	1.6E+00	2.1E-03	ND	1.6E+00	2.3E-03
propionaldehyde	(H)	ND	2.9E-01	1.8E-04	ND	3.1E-01	2.0E-04	ND	3.1E-01	1.7E-04	ND	3.0E-01	1.9E-04
styrene	(H)	ND	7.8E-02	8.6E-05	ND	8.1E-02	9.6E-05	ND	7.9E-02	7.9E-05	ND	8.0E-02	8.7E-05
toluene	(H)	ND	7.8E-02	7.6E-05	ND	8.1E-02	8.5E-05	ND	7.9E-02	7.0E-05	ND	8.0E-02	7.7E-05
1,2,4-trichlorobenzene	(H)	ND	7.8E-02	1.5E-04	ND	8.1E-02	1.7E-04	ND	7.9E-02	1.4E-04	ND	8.0E-02	1.5E-04
m,p-xylene	(H)	ND	7.8E-02	8.8E-05	ND	8.1E-02	9.8E-05	ND	7.9E-02	8.0E-05	ND	8.0E-02	8.9E-05
o-xylene	(H)	ND	7.8E-02	8.8E-05	ND	8.1E-02	9.8E-05	ND	7.9E-02	8.0E-05	ND	8.0E-02	8.9E-05
THC as Carbon			1.5E+02	1.9E-02		1.3E+02	1.7E-02		1.9E+02	2.1E-02		1.5E+02	1.9E-02
Total HAPs				3.0E-03			3.2E-03			3.7E-03			3.3E-03
Total Terpenes				0.0E+00			0.0E+00			0.0E+00			0.0E+00
Production Rate (MSF/hr)				17.6			16.4			19.1			17.7
Vol. Flow Rate (DSCFM)				1.2E+03			1.2E+03			1.2E+03			1.2E+03
Source Moisture (%)				12.2			11.4			10.8			11.5
Source Temp (°C)				140.5			140.8			141.7			141.0

ND x.xxEx = Below detection limit of x.xxEx; BP = Below practical quantitation limit; IM = Below detection limit in impinger sample; NA = Not analyzed by this method; H = CAA HAP; N = Not a HAP or VOC as defined by US EPA; TM = Start and end times for THC and speciated compounds differ; QA = Failed quality assurance; MSF = 1000 square feet; ODTH = Oven Dried Tons per Hour; AI = Analytical Interference; MLF = 1000 Linear Feet; MCF = 1000 Cubic Feet

12/9/99
9:13 AM

Table B70. Summary of Emission Test Results
Hardwood Veneer Dryer No. 1, Red Oak Furnish, Cooling Sectiont Vent (401-1DV1)

Analyte		401-1DV1N1			401-1DV1N2			401-1DV1N3			Average Emission		
			ppmVd	lb/MSF		ppmVd	lb/MSF		ppmVd	lb/MSF		ppmVd	lb/MSF
acetaldehyde	(H)	IM	4.1E-01	2.5E-03	IM	4.2E-01	3.5E-03	BP	6.3E-01	5.5E-03		4.9E-01	3.8E-03
acetone	(N)	IM	3.5E-01	2.8E-03	IM	3.7E-01	4.0E-03	IM	5.4E-01	6.2E-03		4.2E-01	4.3E-03
acrolein	(H)	ND	2.9E-01	2.2E-03	ND	2.9E-01	3.0E-03	ND	3.4E-01	3.8E-03	ND	3.1E-01	3.0E-03
benzene	(H)	ND	8.4E-02	9.0E-04	ND	8.5E-02	1.2E-03	ND	1.0E-01	1.6E-03	ND	9.0E-02	1.2E-03
bromomethane	(H)	ND	8.4E-02	1.1E-03	ND	8.5E-02	1.5E-03	ND	1.0E-01	1.9E-03	ND	9.0E-02	1.5E-03
camphene		ND	1.7E+00	3.1E-02	ND	1.7E+00	4.3E-02	ND	2.0E+00	5.5E-02	ND	1.8E+00	4.3E-02
3-carene		ND	1.7E+00	3.1E-02	ND	1.7E+00	4.3E-02	ND	2.0E+00	5.5E-02	ND	1.8E+00	4.3E-02
chloroethane	(H)	ND	8.4E-02	7.4E-04	ND	8.5E-02	1.0E-03	ND	1.0E-01	1.3E-03	ND	9.0E-02	1.0E-03
chloroethene	(H)	ND	8.4E-02	7.2E-04	ND	8.5E-02	9.8E-04	ND	1.0E-01	1.3E-03	ND	9.0E-02	9.9E-04
cumene	(H)	ND	1.7E+00	2.8E-02	ND	1.7E+00	3.8E-02	ND	2.0E+00	4.9E-02	ND	1.8E+00	3.8E-02
p-cymene		ND	1.7E+00	3.1E-02	ND	1.7E+00	4.2E-02	ND	2.0E+00	5.4E-02	ND	1.8E+00	4.2E-02
1,2-dichloroethane	(H)	ND	8.4E-02	1.1E-03	ND	8.5E-02	1.6E-03	ND	1.0E-01	2.0E-03	ND	9.0E-02	1.6E-03
cis-1,2-dichloroethylene		ND	8.4E-02	1.1E-03	ND	8.5E-02	1.5E-03	ND	1.0E-01	2.0E-03	ND	9.0E-02	1.5E-03
formaldehyde	(H)	ND	1.6E-01	6.4E-04	BP	3.3E-01	1.9E-03	ND	1.8E-01	1.1E-03		1.1E-01	6.2E-04
limonene		ND	1.7E+00	3.1E-02	ND	1.7E+00	4.3E-02	ND	2.0E+00	5.5E-02	ND	1.8E+00	4.3E-02
p-mentha-1,5-diene		ND	1.7E+00	3.1E-02	ND	1.7E+00	4.3E-02	ND	2.0E+00	5.5E-02	ND	1.8E+00	4.3E-02
methanol	(H)	ND	5.3E-01	2.3E-03	ND	5.4E-01	3.2E-03	IM	6.4E-01	4.0E-03		2.1E-01	1.3E-03
methyl ethyl ketone (MEK)	(H)	ND	2.8E-01	2.8E-03	ND	2.9E-01	3.8E-03	ND	3.3E-01	4.8E-03	ND	3.0E-01	3.8E-03
methyl isobutyl ketone	(H)	IM	2.0E-01	2.8E-03	ND	2.0E-01	3.7E-03	IM	2.9E-01	5.7E-03		1.6E-01	2.8E-03
methylene chloride	(H)	ND	8.4E-02	9.8E-04	ND	8.5E-02	1.3E-03	ND	1.0E-01	1.7E-03	ND	9.0E-02	1.3E-03
phenol	(H)	ND	3.4E-01	4.4E-03	ND	3.5E-01	6.2E-03	ND	4.1E-01	7.6E-03	ND	3.7E-01	6.1E-03
alpha-pinene		ND	1.7E+00	3.1E-02	ND	1.7E+00	4.3E-02	ND	2.0E+00	5.5E-02	ND	1.8E+00	4.3E-02
beta-pinene		ND	1.7E+00	3.1E-02	ND	1.7E+00	4.3E-02	ND	2.0E+00	5.5E-02	ND	1.8E+00	4.3E-02
propionaldehyde	(H)	ND	3.1E-01	2.5E-03	ND	3.2E-01	3.4E-03	ND	3.7E-01	4.3E-03	ND	3.3E-01	3.4E-03
styrene	(H)	ND	8.4E-02	1.2E-03	ND	8.5E-02	1.6E-03	ND	1.0E-01	2.1E-03	ND	9.0E-02	1.6E-03
toluene	(H)	ND	8.4E-02	1.1E-03	ND	8.5E-02	1.5E-03	ND	1.0E-01	1.9E-03	ND	9.0E-02	1.5E-03
1,2,4-trichlorobenzene	(H)	ND	8.4E-02	2.1E-03	ND	8.5E-02	2.9E-03	ND	1.0E-01	3.7E-03	ND	9.0E-02	2.9E-03
m,p-xylene	(H)	ND	8.4E-02	1.2E-03	ND	8.5E-02	1.7E-03	ND	1.0E-01	2.1E-03	ND	9.0E-02	1.7E-03
o-xylene	(H)	ND	8.4E-02	1.2E-03	ND	8.5E-02	1.7E-03	ND	1.0E-01	2.1E-03	ND	9.0E-02	1.7E-03
THC as Carbon		NA			NA			NA					
Total HAPs				5.3E-03			5.3E-03			1.5E-02			8.6E-03
Total Terpenes				0.0E+00			0.0E+00			0.0E+00			0.0E+00
Production Rate (MSF/hr)				20.9			15.7			14.9			17.2
Vol. Flow Rate (DSCFM)				1.8E+04			1.9E+04			1.9E+04			1.9E+04
Source Moisture (%)				1.9			2.1			2.2			2.0
Source Temp (°C)				34.1			34.4			35.0			34.5

ND x.xxEx = Below detection limit of x.xxEx; BP = Below practical quantitation limit; IM = Below detection limit in impinger sample; NA = Not analyzed by this method; H = CAA HAP; N = Not a HAP or VOC as defined by US EPA; TM = Start and end times for THC and speciated compounds differ; QA = Failed quality assurance; MSF = 1000 square feet; ODTH = Oven Dried Tons per Hour; AI = Analytical Interference; MLF = 1000 Linear Feet; MCF = 1000 Cubic Feet

Table B71. Summary of Emission Test Results
Hardwood Veneer Dryer No. 1, Red Oak Furnish, Dry End Vent (401-1DV2)

Analyte		401-1DV2N1			401-1DV2N2			401-1DV2N3			Average Emission		
			ppmVd	lb/MSF		ppmVd	lb/MSF		ppmVd	lb/MSF		ppmVd	lb/MSF
acetaldehyde	(H)	BP	7.0E-01	1.4E-04	BP	8.6E-01	3.2E-04	BP	8.3E-01	4.9E-04		8.0E-01	3.2E-04
acetone	(N)	IM	2.9E-01	7.8E-05	IM	3.7E-01	1.8E-04	IM	4.0E-01	3.1E-04		3.5E-01	1.9E-04
acrolein	(H)	ND	2.5E-01	6.5E-05	ND	3.1E-01	1.5E-04	ND	3.4E-01	2.5E-04	ND	3.0E-01	1.5E-04
benzene	(H)	ND	7.9E-02	2.9E-05	ND	8.2E-02	5.4E-05	ND	1.1E-01	1.2E-04	ND	9.0E-02	6.6E-05
bromomethane	(H)	ND	7.9E-02	3.5E-05	ND	8.2E-02	6.5E-05	ND	1.1E-01	1.4E-04	ND	9.0E-02	8.0E-05
camphene		ND	1.6E+00	1.0E-03	ND	1.6E+00	1.9E-03	ND	2.2E+00	4.0E-03	ND	1.8E+00	2.3E-03
3-carene		ND	1.6E+00	1.0E-03	ND	1.6E+00	1.9E-03	ND	2.2E+00	4.0E-03	ND	1.8E+00	2.3E-03
chloroethane	(H)	ND	7.9E-02	2.4E-05	ND	8.2E-02	4.4E-05	ND	1.1E-01	9.5E-05	ND	9.0E-02	5.5E-05
chloroethene	(H)	ND	7.9E-02	2.3E-05	ND	8.2E-02	4.3E-05	ND	1.1E-01	9.2E-05	ND	9.0E-02	5.3E-05
cumene	(H)	ND	1.6E+00	8.8E-04	ND	1.6E+00	1.7E-03	ND	2.2E+00	3.6E-03	ND	1.8E+00	2.0E-03
p-cymene		ND	1.6E+00	9.9E-04	ND	1.6E+00	1.8E-03	ND	2.2E+00	4.0E-03	ND	1.8E+00	2.3E-03
1,2-dichloroethane	(H)	ND	7.9E-02	3.6E-05	ND	8.2E-02	6.8E-05	ND	1.1E-01	1.5E-04	ND	9.0E-02	8.4E-05
cis-1,2-dichloroethylene		ND	7.9E-02	3.6E-05	ND	8.2E-02	6.7E-05	ND	1.1E-01	1.4E-04	ND	9.0E-02	8.2E-05
formaldehyde	(H)	BP	2.0E-01	2.8E-05	ND	1.8E-01	4.5E-05	ND	1.8E-01	7.1E-05		6.7E-02	9.3E-06
limonene		ND	1.6E+00	1.0E-03	ND	1.6E+00	1.9E-03	ND	2.2E+00	4.0E-03	ND	1.8E+00	2.3E-03
p-mentha-1,5-diene		ND	1.6E+00	1.0E-03	ND	1.6E+00	1.9E-03	ND	2.2E+00	4.0E-03	ND	1.8E+00	2.3E-03
methanol	(H)		1.0E+01	1.5E-03		6.5E+00	1.7E-03		6.1E+00	2.6E-03		7.6E+00	2.0E-03
methyl ethyl ketone (MEK)	(H)	ND	2.5E-01	8.3E-05	ND	3.0E-01	1.8E-04	ND	3.3E-01	3.2E-04	ND	2.9E-01	2.0E-04
methyl isobutyl ketone	(H)	ND	1.8E-01	8.2E-05	ND	2.1E-01	1.8E-04	ND	2.4E-01	3.2E-04	ND	2.1E-01	1.9E-04
methylene chloride	(H)	ND	7.9E-02	3.1E-05	ND	8.2E-02	5.8E-05	ND	1.1E-01	1.3E-04	ND	9.0E-02	7.2E-05
phenol	(H)	ND	3.0E-01	1.3E-04	ND	3.7E-01	3.0E-04	ND	4.0E-01	5.1E-04	ND	3.6E-01	3.1E-04
alpha-pinene		ND	1.6E+00	1.0E-03	ND	1.6E+00	1.9E-03	ND	2.2E+00	4.0E-03	ND	1.8E+00	2.3E-03
beta-pinene		ND	1.6E+00	1.0E-03	ND	1.6E+00	1.9E-03	ND	2.2E+00	4.0E-03	ND	1.8E+00	2.3E-03
propionaldehyde	(H)	ND	2.7E-01	7.4E-05	ND	3.4E-01	1.7E-04	ND	3.6E-01	2.8E-04	ND	3.2E-01	1.7E-04
styrene	(H)	ND	7.9E-02	3.8E-05	ND	8.2E-02	7.2E-05	ND	1.1E-01	1.5E-04	ND	9.0E-02	8.8E-05
toluene	(H)	ND	7.9E-02	3.4E-05	ND	8.2E-02	6.3E-05	ND	1.1E-01	1.4E-04	ND	9.0E-02	7.8E-05
1,2,4-trichlorobenzene	(H)	ND	7.9E-02	6.7E-05	ND	8.2E-02	1.2E-04	ND	1.1E-01	2.7E-04	ND	9.0E-02	1.5E-04
m,p-xylene	(H)	ND	7.9E-02	3.9E-05	ND	8.2E-02	7.3E-05	ND	1.1E-01	1.6E-04	ND	9.0E-02	9.0E-05
o-xylene	(H)	ND	7.9E-02	3.9E-05	ND	8.2E-02	7.3E-05	ND	1.1E-01	1.6E-04	ND	9.0E-02	9.0E-05
THC as Carbon			1.7E+02	9.3E-03		1.6E+02	1.6E-02		1.8E+02	2.9E-02		1.7E+02	1.8E-02
Total HAPs				1.7E-03			2.1E-03			3.1E-03			2.3E-03
Total Terpenes				0.0E+00			0.0E+00			0.0E+00			0.0E+00
Production Rate (MSF/hr)				20.9			15.7			14.9			17.2
Vol. Flow Rate (DSCFM)				6.3E+02			8.5E+02			1.3E+03			9.2E+02
Source Moisture (%)				6.3			6.2			11.5			8.0
Source Temp (°C)				114.4			114.8			112.4			113.9

ND x.xxEx = Below detection limit of x.xxEx; BP = Below practical quantitation limit; IM = Below detection limit in impinger sample; NA = Not analyzed by this method; H = CAA HAP; N = Not a HAP or VOC as defined by US EPA; TM = Start and end times for THC and speciated compounds differ; QA = Failed quality assurance; MSF = 1000 square feet; ODTH = Oven Dried Tons per Hour; AI = Analytical Interference; MLF = 1000 Linear Feet; MCF = 1000 Cubic Feet

12/9/99
9:13 AM

Table B72. Summary of Emission Test Results
Hardwood Veneer Dryer No. 1, Red Oak Furnish, Green End Vent (401-1DV3)

Analyte		401-1DV3N1			401-1DV3N2			401-1DV3N3			Average Emission		
			ppmVd	lb/MSF		ppmVd	lb/MSF		ppmVd	lb/MSF		ppmVd	lb/MSF
acetaldehyde	(H)	BP	9.2E-01	2.7E-04	BP	7.3E-01	2.7E-04	BP	9.4E-01	3.4E-04		8.6E-01	3.0E-04
acetone	(N)	IM	3.4E-01	1.3E-04	IM	3.6E-01	1.8E-04	IM	3.8E-01	1.8E-04		3.6E-01	1.6E-04
acrolein	(H)	ND	2.9E-01	1.1E-04	ND	3.0E-01	1.4E-04	ND	3.3E-01	1.5E-04	ND	3.0E-01	1.3E-04
benzene	(H)	ND	8.3E-02	4.4E-05	ND	8.9E-02	5.9E-05	ND	1.2E-01	7.5E-05	ND	9.6E-02	6.0E-05
bromomethane	(H)	ND	8.3E-02	5.4E-05	ND	8.9E-02	7.2E-05	ND	1.2E-01	9.1E-05	ND	9.6E-02	7.2E-05
camphene		ND	1.7E+00	1.5E-03	ND	1.8E+00	2.1E-03	ND	2.3E+00	2.6E-03	ND	1.9E+00	2.1E-03
3-carene		ND	1.7E+00	1.5E-03	ND	1.8E+00	2.1E-03	ND	2.3E+00	2.6E-03	ND	1.9E+00	2.1E-03
chloroethane	(H)	ND	8.3E-02	3.6E-05	ND	8.9E-02	4.9E-05	ND	1.2E-01	6.2E-05	ND	9.6E-02	4.9E-05
chloroethene	(H)	ND	8.3E-02	3.5E-05	ND	8.9E-02	4.7E-05	ND	1.2E-01	6.0E-05	ND	9.6E-02	4.8E-05
cumene	(H)	ND	1.7E+00	1.4E-03	ND	1.8E+00	1.8E-03	ND	2.3E+00	2.3E-03	ND	1.9E+00	1.8E-03
p-cymene		ND	1.7E+00	1.5E-03	ND	1.8E+00	2.0E-03	ND	2.3E+00	2.6E-03	ND	1.9E+00	2.0E-03
1,2-dichloroethane	(H)	ND	8.3E-02	5.6E-05	ND	8.9E-02	7.5E-05	ND	1.2E-01	9.5E-05	ND	9.6E-02	7.5E-05
cis-1,2-dichloroethylene		ND	8.3E-02	5.5E-05	ND	8.9E-02	7.4E-05	ND	1.2E-01	9.3E-05	ND	9.6E-02	7.4E-05
formaldehyde	(H)	BP	3.1E-01	6.3E-05	ND	1.6E-01	4.1E-05	ND	1.6E-01	4.1E-05		1.0E-01	2.1E-05
limonene		ND	1.7E+00	1.5E-03	ND	1.8E+00	2.1E-03	ND	2.3E+00	2.6E-03	ND	1.9E+00	2.1E-03
p-mentha-1,5-diene		ND	1.7E+00	1.5E-03	ND	1.8E+00	2.1E-03	ND	2.3E+00	2.6E-03	ND	1.9E+00	2.1E-03
methanol	(H)		1.3E+01	2.7E-03		9.3E+00	2.5E-03		7.4E+00	2.0E-03		9.7E+00	2.4E-03
methyl ethyl ketone (MEK)	(H)	ND	2.8E-01	1.4E-04	ND	2.9E-01	1.8E-04	ND	3.2E-01	1.9E-04	ND	3.0E-01	1.7E-04
methyl isobutyl ketone	(H)	ND	2.0E-01	1.3E-04	ND	2.0E-01	1.7E-04	ND	2.3E-01	1.9E-04	ND	2.1E-01	1.7E-04
methylene chloride	(H)	ND	8.3E-02	4.8E-05	ND	8.9E-02	6.5E-05	ND	1.2E-01	8.2E-05	ND	9.6E-02	6.5E-05
phenol	(H)	BP	3.9E-01	2.5E-04	ND	3.6E-01	2.8E-04	ND	3.9E-01	3.0E-04		1.3E-01	8.3E-05
alpha-pinene		ND	1.7E+00	1.5E-03	ND	1.8E+00	2.1E-03	ND	2.3E+00	2.6E-03	ND	1.9E+00	2.1E-03
beta-pinene		ND	1.7E+00	1.5E-03	ND	1.8E+00	2.1E-03	ND	2.3E+00	2.6E-03	ND	1.9E+00	2.1E-03
propionaldehyde	(H)	ND	3.1E-01	1.2E-04	ND	3.2E-01	1.6E-04	ND	3.5E-01	1.7E-04	ND	3.3E-01	1.5E-04
styrene	(H)	ND	8.3E-02	5.9E-05	ND	8.9E-02	7.9E-05	ND	1.2E-01	1.0E-04	ND	9.6E-02	7.9E-05
toluene	(H)	ND	8.3E-02	5.2E-05	ND	8.9E-02	7.0E-05	ND	1.2E-01	8.9E-05	ND	9.6E-02	7.0E-05
1,2,4-trichlorobenzene	(H)	ND	8.3E-02	1.0E-04	ND	8.9E-02	1.4E-04	ND	1.2E-01	1.7E-04	ND	9.6E-02	1.4E-04
m,p-xylene	(H)	ND	8.3E-02	6.0E-05	ND	8.9E-02	8.1E-05	ND	1.2E-01	1.0E-04	ND	9.6E-02	8.1E-05
o-xylene	(H)	ND	8.3E-02	6.0E-05	ND	8.9E-02	8.1E-05	ND	1.2E-01	1.0E-04	ND	9.6E-02	8.1E-05
THC as Carbon			2.0E+02	1.6E-02		1.9E+02	1.9E-02		2.0E+02	2.0E-02		2.0E+02	1.9E-02
Total HAPs				3.3E-03			2.8E-03			2.3E-03			2.8E-03
Total Terpenes				0.0E+00			0.0E+00			0.0E+00			0.0E+00
Production Rate (MSF/hr)				20.9			15.7			14.9			17.2
Vol. Flow Rate (DSCFM)				9.1E+02			8.6E+02			7.9E+02			8.5E+02
Source Moisture (%)				16.4			15.3			16.0			15.9
Source Temp (°C)				95.4			96.9			96.3			96.2

ND x.xxEx = Below detection limit of x.xxEx; BP = Below practical quantitation limit; IM = Below detection limit in impinger sample; NA = Not analyzed by this method; H = CAA HAP; N = Not a HAP or VOC as defined by US EPA; TM = Start and end times for THC and speciated compounds differ; QA = Failed quality assurance; MSF = 1000 square feet; ODTH = Oven Dried Tons per Hour; AI = Analytical Interference; MLF = 1000 Linear Feet; MCF = 1000 Cubic Feet

Table B73. Summary of Emission Test Results
Hardwood Veneer Dryer No. 1, White Oak Furnish, Cooling Section Vent (401-1DV1)

Analyte		401-1DV1N4			401-1DV1N5			401-1DV1N6			Average Emission		
			ppmVd	lb/MSF		ppmVd	lb/MSF		ppmVd	lb/MSF		ppmVd	lb/MSF
acetaldehyde	(H)	ND	4.2E-01	2.7E-03	ND	4.3E-01	3.3E-03	IM	4.1E-01	3.1E-03		1.4E-01	1.0E-03
acetone	(N)	IM	6.0E-01	5.1E-03	IM	4.0E-01	4.0E-03	IM	3.4E-01	3.4E-03		4.4E-01	4.2E-03
acrolein	(H)	ND	2.9E-01	2.4E-03	ND	3.0E-01	3.0E-03	ND	2.8E-01	2.7E-03	ND	2.9E-01	2.7E-03
benzene	(H)	ND	8.2E-02	9.4E-04	ND	9.1E-02	1.3E-03	ND	8.5E-02	1.1E-03	ND	8.6E-02	1.1E-03
bromomethane	(H)	ND	8.2E-02	1.1E-03	ND	9.1E-02	1.5E-03	ND	8.5E-02	1.4E-03	ND	8.6E-02	1.4E-03
camphene		ND	1.6E+00	3.3E-02	ND	1.8E+00	4.4E-02	ND	1.7E+00	4.0E-02	ND	1.7E+00	3.9E-02
3-carene		ND	1.6E+00	3.3E-02	ND	1.8E+00	4.4E-02	ND	1.7E+00	4.0E-02	ND	1.7E+00	3.9E-02
chloroethane	(H)	ND	8.2E-02	7.8E-04	ND	9.1E-02	1.0E-03	ND	8.5E-02	9.4E-04	ND	8.6E-02	9.2E-04
chloroethene	(H)	ND	8.2E-02	7.5E-04	ND	9.1E-02	1.0E-03	ND	8.5E-02	9.1E-04	ND	8.6E-02	8.9E-04
cumene	(H)	ND	1.6E+00	2.9E-02	ND	1.8E+00	3.8E-02	ND	1.7E+00	3.5E-02	ND	1.7E+00	3.4E-02
p-cymene		ND	1.6E+00	3.2E-02	ND	1.8E+00	4.3E-02	ND	1.7E+00	3.9E-02	ND	1.7E+00	3.8E-02
1,2-dichloroethane	(H)	ND	8.2E-02	1.2E-03	ND	9.1E-02	1.6E-03	ND	8.5E-02	1.4E-03	ND	8.6E-02	1.4E-03
cis-1,2-dichloroethylene		ND	8.2E-02	1.2E-03	ND	9.1E-02	1.6E-03	ND	8.5E-02	1.4E-03	ND	8.6E-02	1.4E-03
formaldehyde	(H)	ND	1.7E-01	7.4E-04	ND	1.6E-01	8.7E-04	ND	1.6E-01	8.0E-04	ND	1.6E-01	8.0E-04
limonene		ND	1.6E+00	3.3E-02	ND	1.8E+00	4.4E-02	ND	1.7E+00	4.0E-02	ND	1.7E+00	3.9E-02
p-mentha-1,5-diene		ND	1.6E+00	3.3E-02	ND	1.8E+00	4.4E-02	ND	1.7E+00	4.0E-02	ND	1.7E+00	3.9E-02
methanol	(H)	ND	5.5E-01	2.6E-03	ND	5.6E-01	3.1E-03	ND	5.2E-01	2.9E-03	ND	5.4E-01	2.9E-03
methyl ethyl ketone (MEK)	(H)	ND	2.9E-01	3.1E-03	ND	3.0E-01	3.8E-03	ND	2.8E-01	3.5E-03	ND	2.9E-01	3.4E-03
methyl isobutyl ketone	(H)	ND	2.0E-01	3.0E-03	ND	2.1E-01	3.7E-03	BP	2.7E-01	4.7E-03		9.1E-02	1.6E-03
methylene chloride	(H)	ND	8.2E-02	1.0E-03	ND	9.1E-02	1.4E-03	ND	8.5E-02	1.2E-03	ND	8.6E-02	1.2E-03
phenol	(H)	ND	3.6E-01	5.0E-03	ND	3.6E-01	6.0E-03	ND	3.4E-01	5.6E-03	ND	3.5E-01	5.5E-03
alpha-pinene		ND	1.6E+00	3.3E-02	ND	1.8E+00	4.4E-02	ND	1.7E+00	4.0E-02	ND	1.7E+00	3.9E-02
beta-pinene		ND	1.6E+00	3.3E-02	ND	1.8E+00	4.4E-02	ND	1.7E+00	4.0E-02	ND	1.7E+00	3.9E-02
propionaldehyde	(H)	ND	3.2E-01	2.8E-03	ND	3.3E-01	3.4E-03	ND	3.1E-01	3.1E-03	ND	3.2E-01	3.1E-03
styrene	(H)	ND	8.2E-02	1.3E-03	ND	9.1E-02	1.7E-03	ND	8.5E-02	1.5E-03	ND	8.6E-02	1.5E-03
toluene	(H)	ND	8.2E-02	1.1E-03	ND	9.1E-02	1.5E-03	ND	8.5E-02	1.3E-03	ND	8.6E-02	1.3E-03
1,2,4-trichlorobenzene	(H)	ND	8.2E-02	2.2E-03	ND	9.1E-02	2.9E-03	ND	8.5E-02	2.6E-03	ND	8.6E-02	2.6E-03
m,p-xylene	(H)	ND	8.2E-02	1.3E-03	ND	9.1E-02	1.7E-03	ND	8.5E-02	1.5E-03	ND	8.6E-02	1.5E-03
o-xylene	(H)	ND	8.2E-02	1.3E-03	ND	9.1E-02	1.7E-03	ND	8.5E-02	1.5E-03	ND	8.6E-02	1.5E-03
THC as Carbon		NA			NA			NA					
Total HAPs				0.0E+00			0.0E+00			7.8E-03			2.6E-03
Total Terpenes				0.0E+00			0.0E+00			0.0E+00			0.0E+00
Production Rate (MSF/hr)				19.4			16.6			17.3			17.7
Vol. Flow Rate (DSCFM)				1.8E+04			1.9E+04			1.9E+04			1.9E+04
Source Moisture (%)				1.8			1.9			1.9			1.9
Source Temp (°C)				31.5			31.8			31.5			31.6

ND x.xxEx = Below detection limit of x.xxEx; BP = Below practical quantitation limit; IM = Below detection limit in impinger sample; NA = Not analyzed by this method; H = CAA HAP; N = Not a HAP or VOC as defined by US EPA; TM = Start and end times for THC and speciated compounds differ; QA = Failed quality assurance; MSF = 1000 square feet; ODTH = Oven Dried Tons per Hour; AI = Analytical Interference; MLF = 1000 Linear Feet; MCF = 1000 Cubic Feet

12/9/99
9:14 AM

Table B74. Summary of Emission Test Results
Hardwood Veneer Dryer No. 1, White Oak Furnish, Dry End Vent (401-1DV2)

Analyte		401-1DV2N4			401-1DV2N5			401-1DV2N6			Average Emission		
			ppmVd	lb/MSF		ppmVd	lb/MSF		ppmVd	lb/MSF		ppmVd	lb/MSF
acetaldehyde	(H)	BP	8.0E-01	1.9E-04	BP	8.6E-01	3.4E-04	BP	9.7E-01	3.1E-04		8.8E-01	2.8E-04
acetone	(N)	IM	2.7E-01	8.6E-05	IM	3.7E-01	1.9E-04	IM	3.6E-01	1.5E-04		3.4E-01	1.4E-04
acrolein	(H)	ND	2.5E-01	7.5E-05	ND	2.9E-01	1.5E-04	ND	3.0E-01	1.2E-04	ND	2.8E-01	1.1E-04
benzene	(H)	ND	7.8E-02	3.3E-05	ND	7.6E-02	5.3E-05	ND	7.9E-02	4.5E-05	ND	7.8E-02	4.4E-05
bromomethane	(H)	ND	7.8E-02	4.0E-05	ND	7.6E-02	6.4E-05	ND	7.9E-02	5.4E-05	ND	7.8E-02	5.3E-05
camphene		ND	1.6E+00	1.2E-03	ND	1.5E+00	1.8E-03	ND	1.6E+00	1.6E-03	ND	1.6E+00	1.5E-03
3-carene		ND	1.6E+00	1.2E-03	ND	1.5E+00	1.8E-03	ND	1.6E+00	1.6E-03	ND	1.6E+00	1.5E-03
chloroethane	(H)	ND	7.8E-02	2.7E-05	ND	7.6E-02	4.4E-05	ND	7.9E-02	3.7E-05	ND	7.8E-02	3.6E-05
chloroethene	(H)	ND	7.8E-02	2.7E-05	ND	7.6E-02	4.2E-05	ND	7.9E-02	3.6E-05	ND	7.8E-02	3.5E-05
cumene	(H)	ND	1.6E+00	1.0E-03	ND	1.5E+00	1.6E-03	ND	1.6E+00	1.4E-03	ND	1.6E+00	1.3E-03
p-cymene		ND	1.6E+00	1.1E-03	ND	1.5E+00	1.8E-03	ND	1.6E+00	1.5E-03	ND	1.6E+00	1.5E-03
1,2-dichloroethane	(H)	ND	7.8E-02	4.2E-05	ND	7.6E-02	6.7E-05	ND	7.9E-02	5.7E-05	ND	7.8E-02	5.5E-05
cis-1,2-dichloroethylene		ND	7.8E-02	4.1E-05	ND	7.6E-02	6.5E-05	ND	7.9E-02	5.6E-05	ND	7.8E-02	5.4E-05
formaldehyde	(H)	BP	2.2E-01	3.5E-05	BP	3.3E-01	8.8E-05	BP	4.3E-01	9.3E-05		3.2E-01	7.2E-05
limonene		ND	1.6E+00	1.2E-03	ND	1.5E+00	1.8E-03	ND	1.6E+00	1.6E-03	ND	1.6E+00	1.5E-03
p-mentha-1,5-diene		ND	1.6E+00	1.2E-03	ND	1.5E+00	1.8E-03	ND	1.6E+00	1.6E-03	ND	1.6E+00	1.5E-03
methanol	(H)		1.1E+01	1.9E-03		1.2E+01	3.5E-03		1.0E+01	2.4E-03		1.1E+01	2.6E-03
methyl ethyl ketone (MEK)	(H)	ND	2.4E-01	9.5E-05	ND	2.8E-01	1.8E-04	ND	2.9E-01	1.5E-04	ND	2.7E-01	1.4E-04
methyl isobutyl ketone	(H)	ND	1.7E-01	9.4E-05	ND	2.0E-01	1.7E-04	ND	2.0E-01	1.5E-04	ND	1.9E-01	1.4E-04
methylene chloride	(H)	ND	7.8E-02	3.6E-05	ND	7.6E-02	5.7E-05	ND	7.9E-02	4.9E-05	ND	7.8E-02	4.7E-05
phenol	(H)	ND	3.0E-01	1.5E-04	ND	3.5E-01	3.0E-04	ND	3.6E-01	2.5E-04	ND	3.4E-01	2.3E-04
alpha-pinene		ND	1.6E+00	1.2E-03	ND	1.5E+00	1.8E-03	ND	1.6E+00	1.6E-03	ND	1.6E+00	1.5E-03
beta-pinene		ND	1.6E+00	1.2E-03	ND	1.5E+00	1.8E-03	ND	1.6E+00	1.6E-03	ND	1.6E+00	1.5E-03
propionaldehyde	(H)	ND	2.7E-01	8.5E-05	ND	3.2E-01	1.6E-04	ND	3.3E-01	1.4E-04	ND	3.0E-01	1.3E-04
styrene	(H)	ND	7.8E-02	4.4E-05	ND	7.6E-02	7.0E-05	ND	7.9E-02	6.0E-05	ND	7.8E-02	5.8E-05
toluene	(H)	ND	7.8E-02	3.9E-05	ND	7.6E-02	6.2E-05	ND	7.9E-02	5.3E-05	ND	7.8E-02	5.1E-05
1,2,4-trichlorobenzene	(H)	ND	7.8E-02	7.7E-05	ND	7.6E-02	1.2E-04	ND	7.9E-02	1.0E-04	ND	7.8E-02	1.0E-04
m,p-xylene	(H)	ND	7.8E-02	4.5E-05	ND	7.6E-02	7.2E-05	ND	7.9E-02	6.1E-05	ND	7.8E-02	5.9E-05
o-xylene	(H)	ND	7.8E-02	4.5E-05	ND	7.6E-02	7.2E-05	ND	7.9E-02	6.1E-05	ND	7.8E-02	5.9E-05
THC as Carbon			1.2E+02	8.1E-03		1.4E+02	1.5E-02		1.1E+02	9.6E-03		1.2E+02	1.1E-02
Total HAPs				2.1E-03			4.0E-03			2.8E-03			3.0E-03
Total Terpenes				0.0E+00			0.0E+00			0.0E+00			0.0E+00
Production Rate (MSF/hr)				19.4			16.6			17.3			17.7
Vol. Flow Rate (DSCFM)				6.8E+02			9.5E+02			8.0E+02			8.1E+02
Source Moisture (%)				14.8			14.8			14.1			14.6
Source Temp (°C)				103.4			103.2			103.4			103.3

ND x.xxEx = Below detection limit of x.xxEx; BP = Below practical quantitation limit; IM = Below detection limit in impinger sample; NA = Not analyzed by this method; H = CAA HAP; N = Not a HAP or VOC as defined by US EPA; TM = Start and end times for THC and speciated compounds differ; QA = Failed quality assurance; MSF = 1000 square feet; ODTH = Oven Dried Tons per Hour; AI = Analytical Interference; MLF = 1000 Linear Feet; MCF = 1000 Cubic Feet

Table B75. Summary of Emission Test Results
Hardwood Veneer Dryer No. 1, White Oak Furnish, Green End Vent (401-1DV3)

Analyte		401-1DV3N4			401-1DV3N5			401-1DV3N6			Average Emission		
			ppmVd	lb/MSF		ppmVd	lb/MSF		ppmVd	lb/MSF		ppmVd	lb/MSF
acetaldehyde	(H)	BP	6.4E-01	2.1E-04	BP	6.6E-01	2.4E-04	ND	4.0E-01	1.2E-04		4.3E-01	1.5E-04
acetone	(N)	IM	3.2E-01	1.3E-04	IM	3.3E-01	1.6E-04	IM	1.1E+00	4.5E-04		5.9E-01	2.5E-04
acrolein	(H)	ND	2.8E-01	1.1E-04	ND	2.8E-01	1.3E-04	ND	2.9E-01	1.1E-04	ND	2.8E-01	1.2E-04
benzene	(H)	ND	8.0E-02	4.5E-05	ND	7.9E-02	5.1E-05	ND	1.0E-01	5.5E-05	ND	8.8E-02	5.1E-05
bromomethane	(H)	ND	8.0E-02	5.5E-05	ND	7.9E-02	6.2E-05	ND	1.0E-01	6.7E-05	ND	8.8E-02	6.1E-05
camphene		ND	1.6E+00	1.6E-03	ND	1.6E+00	1.8E-03	ND	2.1E+00	1.9E-03	ND	1.8E+00	1.8E-03
3-carene		ND	1.6E+00	1.6E-03	ND	1.6E+00	1.8E-03	ND	2.1E+00	1.9E-03	ND	1.8E+00	1.8E-03
chloroethane	(H)	ND	8.0E-02	3.8E-05	ND	7.9E-02	4.2E-05	ND	1.0E-01	4.6E-05	ND	8.8E-02	4.2E-05
chloroethene	(H)	ND	8.0E-02	3.6E-05	ND	7.9E-02	4.1E-05	ND	1.0E-01	4.4E-05	ND	8.8E-02	4.0E-05
cumene	(H)	ND	1.6E+00	1.4E-03	ND	1.6E+00	1.6E-03	ND	2.1E+00	1.7E-03	ND	1.8E+00	1.6E-03
p-cymene		ND	1.6E+00	1.6E-03	ND	1.6E+00	1.7E-03	ND	2.1E+00	1.9E-03	ND	1.8E+00	1.7E-03
1,2-dichloroethane	(H)	ND	8.0E-02	5.8E-05	ND	7.9E-02	6.4E-05	ND	1.0E-01	7.0E-05	ND	8.8E-02	6.4E-05
cis-1,2-dichloroethylene		ND	8.0E-02	5.6E-05	ND	7.9E-02	6.3E-05	ND	1.0E-01	6.9E-05	ND	8.8E-02	6.3E-05
formaldehyde	(H)	BP	1.7E-01	3.8E-05	BP	3.7E-01	9.0E-05	BP	2.4E-01	4.9E-05		2.6E-01	5.9E-05
limonene		ND	1.6E+00	1.6E-03	ND	1.6E+00	1.8E-03	ND	2.1E+00	1.9E-03	ND	1.8E+00	1.8E-03
p-mentha-1,5-diene		ND	1.6E+00	1.6E-03	ND	1.6E+00	1.8E-03	ND	2.1E+00	1.9E-03	ND	1.8E+00	1.8E-03
methanol	(H)		1.3E+01	3.0E-03		1.3E+01	3.3E-03		1.3E+01	2.8E-03		1.3E+01	3.0E-03
methyl ethyl ketone (MEK)	(H)	ND	2.7E-01	1.4E-04	ND	2.7E-01	1.6E-04	ND	2.9E-01	1.4E-04	ND	2.8E-01	1.5E-04
methyl isobutyl ketone	(H)	ND	1.9E-01	1.4E-04	ND	1.9E-01	1.6E-04	ND	2.1E-01	1.4E-04	ND	2.0E-01	1.5E-04
methylene chloride	(H)	ND	8.0E-02	4.9E-05	ND	7.9E-02	5.5E-05	ND	1.0E-01	6.0E-05	ND	8.8E-02	5.5E-05
phenol	(H)	ND	3.3E-01	2.3E-04	ND	3.4E-01	2.6E-04	BP	3.9E-01	2.6E-04		1.3E-01	8.5E-05
alpha-pinene		ND	1.6E+00	1.6E-03	ND	1.6E+00	1.8E-03	ND	2.1E+00	1.9E-03	ND	1.8E+00	1.8E-03
beta-pinene		ND	1.6E+00	1.6E-03	ND	1.6E+00	1.8E-03	ND	2.1E+00	1.9E-03	ND	1.8E+00	1.8E-03
propionaldehyde	(H)	ND	3.0E-01	1.3E-04	ND	3.0E-01	1.4E-04	ND	3.1E-01	1.3E-04	ND	3.1E-01	1.3E-04
styrene	(H)	ND	8.0E-02	6.1E-05	ND	7.9E-02	6.8E-05	ND	1.0E-01	7.4E-05	ND	8.8E-02	6.7E-05
toluene	(H)	ND	8.0E-02	5.4E-05	ND	7.9E-02	6.0E-05	ND	1.0E-01	6.5E-05	ND	8.8E-02	6.0E-05
1,2,4-trichlorobenzene	(H)	ND	8.0E-02	1.1E-04	ND	7.9E-02	1.2E-04	ND	1.0E-01	1.3E-04	ND	8.8E-02	1.2E-04
m,p-xylene	(H)	ND	8.0E-02	6.2E-05	ND	7.9E-02	6.9E-05	ND	1.0E-01	7.5E-05	ND	8.8E-02	6.9E-05
o-xylene	(H)	ND	8.0E-02	6.2E-05	ND	7.9E-02	6.9E-05	ND	1.0E-01	7.5E-05	ND	8.8E-02	6.9E-05
THC as Carbon			1.4E+02	1.2E-02		1.4E+02	1.4E-02		1.2E+02	9.7E-03		1.3E+02	1.2E-02
Total HAPs				3.2E-03			3.6E-03			3.1E-03			3.3E-03
Total Terpenes				0.0E+00			0.0E+00			0.0E+00			0.0E+00
Production Rate (MSF/hr)				19.4			16.6			17.3			17.7
Vol. Flow Rate (DSCFM)				9.0E+02			8.7E+02			7.7E+02			8.5E+02
Source Moisture (%)				14.0			13.2			12.9			13.4
Source Temp (°C)				87.0			88.3			89.4			88.2

ND x.xxEx = Below detection limit of x.xxEx; BP = Below practical quantitation limit; IM = Below detection limit in impinger sample; NA = Not analyzed by this method; H = CAA HAP; N = Not a HAP or VOC as defined by US EPA; TM = Start and end times for THC and speciated compounds differ; QA = Failed quality assurance; MSF = 1000 square feet; ODTH = Oven Dried Tons per Hour; AI = Analytical Interference; MLF = 1000 Linear Feet; MCF = 1000 Cubic Feet

12/9/99
9:14 AM

Table B76. Summary of Emission Test Results
Hardwood Veneer Dryer No. 2, Maple Furnish, Cooling Section Vent (401-2DV1)

Analyte		401-2DV1N1			401-2DV1N2			401-2DV1N3			Average Emission		
			ppmVd	lb/MSF		ppmVd	lb/MSF		ppmVd	lb/MSF		ppmVd	lb/MSF
acetaldehyde	(H)	ND	4.4E-01	2.3E-03	BP	5.3E-01	3.2E-03	ND	4.5E-01	2.3E-03		1.8E-01	1.1E-03
acetone	(N)	IM	4.2E-01	2.9E-03	IM	3.8E-01	3.0E-03	IM	8.3E-01	5.7E-03		5.4E-01	3.9E-03
acrolein	(H)	ND	3.2E-01	2.1E-03	ND	2.8E-01	2.1E-03	ND	3.3E-01	2.2E-03	ND	3.1E-01	2.1E-03
benzene	(H)	ND	1.2E-01	1.1E-03	ND	8.0E-02	8.4E-04	ND	1.2E-01	1.1E-03	ND	1.1E-01	1.0E-03
bromomethane	(H)	ND	1.2E-01	1.3E-03	ND	8.0E-02	1.0E-03	ND	1.2E-01	1.3E-03	ND	1.1E-01	1.2E-03
camphene		ND	2.4E+00	3.8E-02	ND	1.6E+00	2.9E-02	ND	2.4E+00	3.9E-02	ND	2.1E+00	3.5E-02
3-carene		ND	2.4E+00	3.8E-02	ND	1.6E+00	2.9E-02	ND	2.4E+00	3.9E-02	ND	2.1E+00	3.5E-02
chloroethane	(H)	ND	1.2E-01	9.1E-04	ND	8.0E-02	7.0E-04	ND	1.2E-01	9.1E-04	ND	1.1E-01	8.4E-04
chloroethene	(H)	ND	1.2E-01	8.8E-04	ND	8.0E-02	6.8E-04	ND	1.2E-01	8.9E-04	ND	1.1E-01	8.1E-04
cumene	(H)	ND	2.4E+00	3.4E-02	ND	1.6E+00	2.6E-02	ND	2.4E+00	3.4E-02	ND	2.1E+00	3.1E-02
p-cymene		ND	2.4E+00	3.8E-02	ND	1.6E+00	2.9E-02	ND	2.4E+00	3.8E-02	ND	2.1E+00	3.5E-02
1,2-dichloroethane	(H)	ND	1.2E-01	1.4E-03	ND	8.0E-02	1.1E-03	ND	1.2E-01	1.4E-03	ND	1.1E-01	1.3E-03
cis-1,2-dichloroethylene		ND	1.2E-01	1.4E-03	ND	8.0E-02	1.0E-03	ND	1.2E-01	1.4E-03	ND	1.1E-01	1.3E-03
formaldehyde	(H)	ND	1.6E-01	5.6E-04	ND	1.6E-01	6.3E-04	ND	1.6E-01	5.7E-04	ND	1.6E-01	5.9E-04
limonene		ND	2.4E+00	3.8E-02	ND	1.6E+00	2.9E-02	ND	2.4E+00	3.9E-02	ND	2.1E+00	3.5E-02
p-mentha-1,5-diene		ND	2.4E+00	3.8E-02	ND	1.6E+00	2.9E-02	ND	2.4E+00	3.9E-02	ND	2.1E+00	3.5E-02
methanol	(H)	ND	5.7E-01	2.1E-03	ND	5.2E-01	2.2E-03	ND	5.7E-01	2.2E-03	ND	5.5E-01	2.2E-03
methyl ethyl ketone (MEK)	(H)	ND	3.2E-01	2.7E-03	ND	2.8E-01	2.7E-03	ND	3.2E-01	2.7E-03	ND	3.0E-01	2.7E-03
methyl isobutyl ketone	(H)	ND	2.3E-01	2.7E-03	ND	1.9E-01	2.6E-03	ND	2.3E-01	2.8E-03	ND	2.2E-01	2.7E-03
methylene chloride	(H)	ND	1.2E-01	1.2E-03	ND	8.0E-02	9.2E-04	ND	1.2E-01	1.2E-03	ND	1.1E-01	1.1E-03
phenol	(H)	ND	3.8E-01	4.2E-03	ND	3.4E-01	4.3E-03	ND	3.8E-01	4.3E-03	ND	3.7E-01	4.3E-03
alpha-pinene		ND	2.4E+00	3.8E-02	ND	1.6E+00	2.9E-02	ND	2.4E+00	3.9E-02	ND	2.1E+00	3.5E-02
beta-pinene		ND	2.4E+00	3.8E-02	ND	1.6E+00	2.9E-02	ND	2.4E+00	3.9E-02	ND	2.1E+00	3.5E-02
propionaldehyde	(H)	ND	3.5E-01	2.4E-03	ND	3.1E-01	2.4E-03	ND	3.5E-01	2.4E-03	ND	3.4E-01	2.4E-03
styrene	(H)	ND	1.2E-01	1.5E-03	ND	8.0E-02	1.1E-03	ND	1.2E-01	1.5E-03	ND	1.1E-01	1.4E-03
toluene	(H)	ND	1.2E-01	1.3E-03	ND	8.0E-02	1.0E-03	ND	1.2E-01	1.3E-03	ND	1.1E-01	1.2E-03
1,2,4-trichlorobenzene	(H)	ND	1.2E-01	2.5E-03	ND	8.0E-02	2.0E-03	ND	1.2E-01	2.6E-03	ND	1.1E-01	2.4E-03
m,p-xylene	(H)	ND	1.2E-01	1.5E-03	ND	8.0E-02	1.1E-03	ND	1.2E-01	1.5E-03	ND	1.1E-01	1.4E-03
o-xylene	(H)	ND	1.2E-01	1.5E-03	ND	8.0E-02	1.1E-03	ND	1.2E-01	1.5E-03	ND	1.1E-01	1.4E-03
THC as Carbon			4.6E+00	6.4E-03		4.3E+00	6.9E-03		4.9E+00	6.9E-03		4.6E+00	6.7E-03
Total HAPs				0.0E+00			3.2E-03			0.0E+00			1.1E-03
Total Terpenes				0.0E+00			0.0E+00			0.0E+00			0.0E+00
Production Rate (MSF/hr)				25.9			22.9			26.2			25.0
Vol. Flow Rate (DSCFM)				2.0E+04			2.0E+04			2.0E+04			2.0E+04
Source Moisture (%)				1.3			1.2			1.3			1.3
Source Temp (°C)				26.4			27.3			26.8			26.8

ND x.xxEx = Below detection limit of x.xxEx; BP = Below practical quantitation limit; IM = Below detection limit in impinger sample; NA = Not analyzed by this method; H = CAA HAP; N = Not a HAP or VOC as defined by US EPA; TM = Start and end times for THC and speciated compounds differ; QA = Failed quality assurance; MSF = 1000 square feet; ODTH = Oven Dried Tons per Hour; AI = Analytical Interference; MLF = 1000 Linear Feet; MCF = 1000 Cubic Feet

Table B77. Summary of Emission Test Results
Hardwood Veneer Dryer No. 2, Maple Furnish, Green End Vent (401-2DV3)

Analyte		401-2DV3N4			401-2DV3N5			401-2DV3N6			Average Emission		
			ppmVd	lb/MSF		ppmVd	lb/MSF		ppmVd	lb/MSF		ppmVd	lb/MSF
acetaldehyde	(H)	ND	4.7E-01	2.2E-04	ND	4.2E-01	2.2E-04	BP	4.9E-01	3.1E-04		1.6E-01	1.0E-04
acetone	(N)	IM	6.1E-01	3.7E-04	IM	3.8E-01	2.7E-04	IM	4.0E-01	3.4E-04		4.6E-01	3.2E-04
acrolein	(H)	ND	3.4E-01	2.0E-04	ND	2.9E-01	2.0E-04	ND	2.9E-01	2.4E-04	ND	3.1E-01	2.1E-04
benzene	(H)	ND	1.2E-01	9.8E-05	ND	8.1E-02	7.7E-05	ND	7.9E-02	8.9E-05	ND	9.3E-02	8.8E-05
bromomethane	(H)	ND	1.2E-01	1.2E-04	ND	8.1E-02	9.4E-05	ND	7.9E-02	1.1E-04	ND	9.3E-02	1.1E-04
camphene		ND	2.4E+00	3.4E-03	ND	1.6E+00	2.7E-03	ND	1.6E+00	3.1E-03	ND	1.9E+00	3.1E-03
3-carene		ND	2.4E+00	3.4E-03	ND	1.6E+00	2.7E-03	ND	1.6E+00	3.1E-03	ND	1.9E+00	3.1E-03
chloroethane	(H)	ND	1.2E-01	8.1E-05	ND	8.1E-02	6.4E-05	ND	7.9E-02	7.3E-05	ND	9.3E-02	7.3E-05
chloroethene	(H)	ND	1.2E-01	7.8E-05	ND	8.1E-02	6.2E-05	ND	7.9E-02	7.1E-05	ND	9.3E-02	7.0E-05
cumene	(H)	ND	2.4E+00	3.0E-03	ND	1.6E+00	2.4E-03	ND	1.6E+00	2.7E-03	ND	1.9E+00	2.7E-03
p-cymene		ND	2.4E+00	3.4E-03	ND	1.6E+00	2.6E-03	ND	1.6E+00	3.1E-03	ND	1.9E+00	3.0E-03
1,2-dichloroethane	(H)	ND	1.2E-01	1.2E-04	ND	8.1E-02	9.8E-05	ND	7.9E-02	1.1E-04	ND	9.3E-02	1.1E-04
cis-1,2-dichloroethylene		ND	1.2E-01	1.2E-04	ND	8.1E-02	9.6E-05	ND	7.9E-02	1.1E-04	ND	9.3E-02	1.1E-04
formaldehyde	(H)	BP	3.3E-01	1.0E-04	BP	3.3E-01	1.2E-04	BP	2.9E-01	1.3E-04		3.2E-01	1.2E-04
limonene		ND	2.4E+00	3.4E-03	ND	1.6E+00	2.7E-03	ND	1.6E+00	3.1E-03	ND	1.9E+00	3.1E-03
p-mentha-1,5-diene		ND	2.4E+00	3.4E-03	ND	1.6E+00	2.7E-03	ND	1.6E+00	3.1E-03	ND	1.9E+00	3.1E-03
methanol	(H)		7.1E+00	2.4E-03		1.1E+01	4.3E-03		8.5E+00	3.9E-03		8.9E+00	3.5E-03
methyl ethyl ketone (MEK)	(H)	ND	3.3E-01	2.5E-04	ND	2.9E-01	2.5E-04	ND	2.9E-01	3.0E-04	ND	3.0E-01	2.7E-04
methyl isobutyl ketone	(H)	ND	2.4E-01	2.6E-04	ND	2.0E-01	2.4E-04	ND	2.0E-01	2.9E-04	ND	2.1E-01	2.6E-04
methylene chloride	(H)	ND	1.2E-01	1.1E-04	ND	8.1E-02	8.4E-05	ND	7.9E-02	9.7E-05	ND	9.3E-02	9.6E-05
phenol	(H)	ND	4.0E-01	4.0E-04	ND	3.5E-01	4.0E-04	ND	3.6E-01	4.8E-04	ND	3.7E-01	4.3E-04
alpha-pinene		ND	2.4E+00	3.4E-03	ND	1.6E+00	2.7E-03	ND	1.6E+00	3.1E-03	ND	1.9E+00	3.1E-03
beta-pinene		ND	2.4E+00	3.4E-03	ND	1.6E+00	2.7E-03	ND	1.6E+00	3.1E-03	ND	1.9E+00	3.1E-03
propionaldehyde	(H)	ND	1.2E-01	7.3E-05	ND	8.1E-02	5.7E-05	ND	7.9E-02	6.6E-05	ND	9.3E-02	6.5E-05
styrene	(H)	ND	1.2E-01	1.3E-04	ND	8.1E-02	1.0E-04	ND	7.9E-02	1.2E-04	ND	9.3E-02	1.2E-04
toluene	(H)	ND	1.2E-01	1.2E-04	ND	8.1E-02	9.1E-05	ND	7.9E-02	1.0E-04	ND	9.3E-02	1.0E-04
1,2,4-trichlorobenzene	(H)	ND	1.2E-01	2.3E-04	ND	8.1E-02	1.8E-04	ND	7.9E-02	2.1E-04	ND	9.3E-02	2.0E-04
m,p-xylene	(H)	ND	1.2E-01	1.3E-04	ND	8.1E-02	1.0E-04	ND	7.9E-02	1.2E-04	ND	9.3E-02	1.2E-04
o-xylene	(H)	ND	1.2E-01	1.3E-04	ND	8.1E-02	1.0E-04	ND	7.9E-02	1.2E-04	ND	9.3E-02	1.2E-04
THC as Carbon			9.3E+01	1.2E-02		1.4E+02	2.1E-02		1.8E+02	3.2E-02		1.4E+02	2.2E-02
Total HAPs				2.5E-03			4.4E-03			4.4E-03			3.8E-03
Total Terpenes				0.0E+00			0.0E+00			0.0E+00			0.0E+00
Production Rate (MSF/hr)				23.9			18.8			15.5			19.4
Vol. Flow Rate (DSCFM)				1.6E+03			1.5E+03			1.4E+03			1.5E+03
Source Moisture (%)				8.9			10.8			12.1			10.6
Source Temp (°C)				96.2			101.6			103.2			100.3

ND x.xxEx = Below detection limit of x.xxEx; BP = Below practical quantitation limit; IM = Below detection limit in impinger sample; NA = Not analyzed by this method; H = CAA HAP; N = Not a HAP or VOC as defined by US EPA; TM = Start and end times for THC and speciated compounds differ; QA = Failed quality assurance; MSF = 1000 square feet; ODTH = Oven Dried Tons per Hour; AI = Analytical Interference; MLF = 1000 Linear Feet; MCF = 1000 Cubic Feet

12/9/99
9:14 AM

Table B78. Summary of Emission Test Results
Hardwood Veneer Dryer No. 2, Oak Furnish, Cooling Section Vent (401-2DV1)

Analyte		401-2DV1N4			401-2DV1N5			401-2DV1N6			Average Emission		
			ppmVd	lb/MSF		ppmVd	lb/MSF		ppmVd	lb/MSF		ppmVd	lb/MSF
acetaldehyde	(H)	ND	4.7E-01	2.7E-03	ND	4.9E-01	3.6E-03	ND	4.2E-01	3.7E-03	ND	4.6E-01	3.3E-03
acetone	(N)	ND	3.7E-01	2.8E-03	ND	3.8E-01	3.7E-03	IM	4.2E-01	4.9E-03		1.4E-01	1.6E-03
acrolein	(H)	ND	3.4E-01	2.5E-03	ND	3.5E-01	3.3E-03	ND	2.9E-01	3.3E-03	ND	3.3E-01	3.0E-03
benzene	(H)	ND	1.2E-01	1.2E-03	ND	1.2E-01	1.6E-03	ND	8.1E-02	1.3E-03	ND	1.1E-01	1.4E-03
bromomethane	(H)	ND	1.2E-01	1.5E-03	ND	1.2E-01	1.9E-03	ND	8.1E-02	1.5E-03	ND	1.1E-01	1.7E-03
camphene		ND	2.5E+00	4.3E-02	ND	2.4E+00	5.5E-02	ND	1.6E+00	4.4E-02	ND	2.2E+00	4.7E-02
3-carene		ND	2.5E+00	4.3E-02	ND	2.4E+00	5.5E-02	ND	1.6E+00	4.4E-02	ND	2.2E+00	4.7E-02
chloroethane	(H)	ND	1.2E-01	1.0E-03	ND	1.2E-01	1.3E-03	ND	8.1E-02	1.1E-03	ND	1.1E-01	1.1E-03
chloroethene	(H)	ND	1.2E-01	9.9E-04	ND	1.2E-01	1.3E-03	ND	8.1E-02	1.0E-03	ND	1.1E-01	1.1E-03
cumene	(H)	ND	2.5E+00	3.8E-02	ND	2.4E+00	4.8E-02	ND	1.6E+00	3.9E-02	ND	2.2E+00	4.2E-02
p-cymene		ND	2.5E+00	4.2E-02	ND	2.4E+00	5.4E-02	ND	1.6E+00	4.4E-02	ND	2.2E+00	4.7E-02
1,2-dichloroethane	(H)	ND	1.2E-01	1.6E-03	ND	1.2E-01	2.0E-03	ND	8.1E-02	1.6E-03	ND	1.1E-01	1.7E-03
cis-1,2-dichloroethylene		ND	1.2E-01	1.5E-03	ND	1.2E-01	1.9E-03	ND	8.1E-02	1.6E-03	ND	1.1E-01	1.7E-03
formaldehyde	(H)	ND	1.7E-01	6.6E-04	ND	1.8E-01	9.0E-04	ND	1.6E-01	1.0E-03	ND	1.7E-01	8.5E-04
limonene		ND	2.5E+00	4.3E-02	ND	2.4E+00	5.5E-02	ND	1.6E+00	4.4E-02	ND	2.2E+00	4.7E-02
p-mentha-1,5-diene		ND	2.5E+00	4.3E-02	ND	2.4E+00	5.5E-02	ND	1.6E+00	4.4E-02	ND	2.2E+00	4.7E-02
methanol	(H)	ND	6.0E-01	2.5E-03	ND	6.3E-01	3.3E-03	ND	5.5E-01	3.5E-03	ND	5.9E-01	3.1E-03
methyl ethyl ketone (MEK)	(H)	ND	3.4E-01	3.1E-03	ND	3.5E-01	4.1E-03	ND	2.9E-01	4.2E-03	ND	3.2E-01	3.8E-03
methyl isobutyl ketone	(H)	ND	2.5E-01	3.2E-03	ND	2.5E-01	4.2E-03	ND	2.0E-01	4.0E-03	ND	2.3E-01	3.8E-03
methylene chloride	(H)	ND	1.2E-01	1.3E-03	ND	1.2E-01	1.7E-03	ND	8.1E-02	1.4E-03	ND	1.1E-01	1.5E-03
phenol	(H)	ND	4.1E-01	4.9E-03	ND	4.2E-01	6.6E-03	ND	3.5E-01	6.7E-03	ND	3.9E-01	6.1E-03
alpha-pinene		ND	2.5E+00	4.3E-02	ND	2.4E+00	5.5E-02	ND	1.6E+00	4.4E-02	ND	2.2E+00	4.7E-02
beta-pinene		ND	2.5E+00	4.3E-02	ND	2.4E+00	5.5E-02	ND	1.6E+00	4.4E-02	ND	2.2E+00	4.7E-02
propionaldehyde	(H)	ND	3.7E-01	2.8E-03	ND	3.8E-01	3.7E-03	ND	3.2E-01	3.7E-03	ND	3.6E-01	3.4E-03
styrene	(H)	ND	1.2E-01	1.6E-03	ND	1.2E-01	2.1E-03	ND	8.1E-02	1.7E-03	ND	1.1E-01	1.8E-03
toluene	(H)	ND	1.2E-01	1.5E-03	ND	1.2E-01	1.8E-03	ND	8.1E-02	1.5E-03	ND	1.1E-01	1.6E-03
1,2,4-trichlorobenzene	(H)	ND	1.2E-01	2.9E-03	ND	1.2E-01	3.6E-03	ND	8.1E-02	3.0E-03	ND	1.1E-01	3.2E-03
m,p-xylene	(H)	ND	1.2E-01	1.7E-03	ND	1.2E-01	2.1E-03	ND	8.1E-02	1.7E-03	ND	1.1E-01	1.8E-03
o-xylene	(H)	ND	1.2E-01	1.7E-03	ND	1.2E-01	2.1E-03	ND	8.1E-02	1.7E-03	ND	1.1E-01	1.8E-03
THC as Carbon			3.7E+00	5.7E-03		3.3E+00	6.6E-03		4.0E+00	9.6E-03		3.7E+00	7.3E-03
Total HAPs				0.0E+00			0.0E+00			0.0E+00			0.0E+00
Total Terpenes				0.0E+00			0.0E+00			0.0E+00			0.0E+00
Production Rate (MSF/hr)				23.9			18.8			15.5			19.4
Vol. Flow Rate (DSCFM)				2.0E+04			2.0E+04			2.0E+04			2.0E+04
Source Moisture (%)				1.4			1.4			1.5			1.4
Source Temp (°C)				29.8			30.4			30.1			30.1

ND x.xxEx = Below detection limit of x.xxEx; BP = Below practical quantitation limit; IM = Below detection limit in impinger sample; NA = Not analyzed by this method; H = CAA HAP; N = Not a HAP or VOC as defined by US EPA; TM = Start and end times for THC and speciated compounds differ; QA = Failed quality assurance; MSF = 1000 square feet; ODTH = Oven Dried Tons per Hour; AI = Analytical Interference; MLF = 1000 Linear Feet; MCF = 1000 Cubic Feet

Table B79. Summary of Emission Test Results
Hardwood Veneer Dryer No. 2, Oak Furnish, Green End Vent (401-2DV3)

Analyte		401-2DV3N1			401-2DV3N2			401-2DV3N3			Average Emission		
			ppmVd	lb/MSF		ppmVd	lb/MSF		ppmVd	lb/MSF		ppmVd	lb/MSF
acetaldehyde	(H)	BP	5.2E-01	2.3E-04	ND	4.2E-01	2.2E-04	ND	4.2E-01	1.9E-04		1.7E-01	7.8E-05
acetone	(N)	IM	9.6E-01	5.7E-04	IM	3.7E-01	2.5E-04	IM	3.5E-01	2.1E-04		5.6E-01	3.5E-04
acrolein	(H)	ND	3.2E-01	1.8E-04	ND	3.0E-01	2.0E-04	ND	2.9E-01	1.7E-04	ND	3.0E-01	1.8E-04
benzene	(H)	ND	1.2E-01	9.6E-05	ND	8.4E-02	7.9E-05	ND	8.0E-02	6.4E-05	ND	9.5E-02	8.0E-05
bromomethane	(H)	ND	1.2E-01	1.2E-04	ND	8.4E-02	9.6E-05	ND	8.0E-02	7.8E-05	ND	9.5E-02	9.7E-05
camphene		ND	2.4E+00	3.3E-03	ND	1.7E+00	2.8E-03	ND	1.6E+00	2.2E-03	ND	1.9E+00	2.8E-03
3-carene		ND	2.4E+00	3.3E-03	ND	1.7E+00	2.8E-03	ND	1.6E+00	2.2E-03	ND	1.9E+00	2.8E-03
chloroethane	(H)	ND	1.2E-01	7.9E-05	ND	8.4E-02	6.5E-05	ND	8.0E-02	5.3E-05	ND	9.5E-02	6.6E-05
chloroethene	(H)	ND	1.2E-01	7.7E-05	ND	8.4E-02	6.3E-05	ND	8.0E-02	5.1E-05	ND	9.5E-02	6.4E-05
cumene	(H)	ND	2.4E+00	3.0E-03	ND	1.7E+00	2.4E-03	ND	1.6E+00	2.0E-03	ND	1.9E+00	2.5E-03
p-cymene		ND	2.4E+00	3.3E-03	ND	1.7E+00	2.7E-03	ND	1.6E+00	2.2E-03	ND	1.9E+00	2.7E-03
1,2-dichloroethane	(H)	ND	1.2E-01	1.2E-04	ND	8.4E-02	1.0E-04	ND	8.0E-02	8.1E-05	ND	9.5E-02	1.0E-04
cis-1,2-dichloroethylene		ND	1.2E-01	1.2E-04	ND	8.4E-02	9.8E-05	ND	8.0E-02	8.0E-05	ND	9.5E-02	9.9E-05
formaldehyde	(H)	ND	1.5E-01	4.7E-05	ND	1.7E-01	6.0E-05	ND	1.7E-01	5.1E-05	ND	1.6E-01	5.3E-05
limonene		ND	2.4E+00	3.3E-03	ND	1.7E+00	2.8E-03	ND	1.6E+00	2.2E-03	ND	1.9E+00	2.8E-03
p-mentha-1,5-diene		ND	2.4E+00	3.3E-03	ND	1.7E+00	2.8E-03	ND	1.6E+00	2.2E-03	ND	1.9E+00	2.8E-03
methanol	(H)	ND	5.5E-01	1.8E-04	ND	5.5E-01	2.1E-04	BP	1.1E+00	3.5E-04		3.5E-01	1.2E-04
methyl ethyl ketone (MEK)	(H)	ND	3.1E-01	2.3E-04	ND	2.9E-01	2.5E-04	ND	2.9E-01	2.1E-04	ND	3.0E-01	2.3E-04
methyl isobutyl ketone	(H)		5.8E-01	5.9E-04	ND	2.0E-01	2.5E-04	BP	2.3E-01	2.4E-04		2.7E-01	2.8E-04
methylene chloride	(H)	ND	1.2E-01	1.0E-04	ND	8.4E-02	8.6E-05	ND	8.0E-02	7.0E-05	ND	9.5E-02	8.7E-05
phenol	(H)	ND	3.7E-01	3.6E-04	ND	3.6E-01	4.1E-04	ND	3.6E-01	3.4E-04	ND	3.6E-01	3.7E-04
alpha-pinene		ND	2.4E+00	3.3E-03	ND	1.7E+00	2.8E-03	ND	1.6E+00	2.2E-03	ND	1.9E+00	2.8E-03
beta-pinene		ND	2.4E+00	3.3E-03	ND	1.7E+00	2.8E-03	ND	1.6E+00	2.2E-03	ND	1.9E+00	2.8E-03
propionaldehyde	(H)	ND	3.4E-01	2.0E-04	ND	3.2E-01	2.3E-04	ND	3.2E-01	1.9E-04	ND	3.3E-01	2.1E-04
styrene	(H)	ND	1.2E-01	1.3E-04	ND	8.4E-02	1.1E-04	ND	8.0E-02	8.6E-05	ND	9.5E-02	1.1E-04
toluene	(H)	ND	1.2E-01	1.1E-04	ND	8.4E-02	9.3E-05	ND	8.0E-02	7.6E-05	ND	9.5E-02	9.4E-05
1,2,4-trichlorobenzene	(H)	ND	1.2E-01	2.2E-04	ND	8.4E-02	1.8E-04	ND	8.0E-02	1.5E-04	ND	9.5E-02	1.9E-04
m,p-xylene	(H)	ND	1.2E-01	1.3E-04	ND	8.4E-02	1.1E-04	ND	8.0E-02	8.7E-05	ND	9.5E-02	1.1E-04
o-xylene	(H)	ND	1.2E-01	1.3E-04	ND	8.4E-02	1.1E-04	ND	8.0E-02	8.7E-05	ND	9.5E-02	1.1E-04
THC as Carbon			3.8E+01	4.7E-03		3.2E+01	4.6E-03		3.2E+01	4.0E-03		3.4E+01	4.4E-03
Total HAPs				8.3E-04			0.0E+00			5.9E-04			4.7E-04
Total Terpenes				0.0E+00			0.0E+00			0.0E+00			0.0E+00
Production Rate (MSF/hr)				25.9			22.9			26.2			25.0
Vol. Flow Rate (DSCFM)				1.7E+03			1.8E+03			1.7E+03			1.7E+03
Source Moisture (%)				7.3			8.3			9.3			8.3
Source Temp (°C)				81.6			82.6			84.4			82.9

ND x.xxEx = Below detection limit of x.xxEx; BP = Below practical quantitation limit; IM = Below detection limit in impinger sample; NA = Not analyzed by this method; H = CAA HAP; N = Not a HAP or VOC as defined by US EPA; TM = Start and end times for THC and speciated compounds differ; QA = Failed quality assurance; MSF = 1000 square feet; ODTH = Oven Dried Tons per Hour; AI = Analytical Interference; MLF = 1000 Linear Feet; MCF = 1000 Cubic Feet

12/9/99
9:14 AM

Table B80. Summary of Emission Test Results
Hardwood Veneer Dryer, Veneer Cooling Section Vent (405-1DV1)

Analyte		405-1DV1N1			405-1DV1N2			405-1DV1N3			Average Emission		
			ppmVd	lb/MSF		ppmVd	lb/MSF		ppmVd	lb/MSF		ppmVd	lb/MSF
acetaldehyde	(H)	ND	4.4E-01	2.2E-03	ND	4.5E-01	2.6E-03	ND	4.7E-01	2.0E-03	ND	4.5E-01	2.3E-03
acetone	(N)	ND	3.4E-01	2.3E-03	ND	3.5E-01	2.7E-03	ND	3.6E-01	2.1E-03	ND	3.5E-01	2.3E-03
acrolein	(H)	ND	3.1E-01	2.0E-03	ND	3.2E-01	2.4E-03	ND	3.3E-01	1.8E-03	ND	3.2E-01	2.1E-03
benzene	(H)	ND	8.2E-02	7.4E-04	ND	8.7E-02	9.0E-04	ND	8.6E-02	6.6E-04	ND	8.5E-02	7.7E-04
bromomethane	(H)	ND	8.2E-02	9.0E-04	ND	8.7E-02	1.1E-03	ND	8.6E-02	8.0E-04	ND	8.5E-02	9.3E-04
camphene		ND	1.6E+00	2.6E-02	ND	1.7E+00	3.1E-02	ND	1.7E+00	2.3E-02	ND	1.7E+00	2.7E-02
3-carene		ND	1.6E+00	2.6E-02	ND	1.7E+00	3.1E-02	ND	1.7E+00	2.3E-02	ND	1.7E+00	2.7E-02
chloroethane	(H)	ND	8.2E-02	6.1E-04	ND	8.7E-02	7.4E-04	ND	8.6E-02	5.4E-04	ND	8.5E-02	6.3E-04
chloroethene	(H)	ND	8.2E-02	5.9E-04	ND	8.7E-02	7.2E-04	ND	8.6E-02	5.3E-04	ND	8.5E-02	6.1E-04
cumene	(H)	ND	1.6E+00	2.3E-02	ND	1.7E+00	2.8E-02	ND	1.7E+00	2.0E-02	ND	1.7E+00	2.4E-02
p-cymene		ND	1.6E+00	2.5E-02	ND	1.7E+00	3.1E-02	ND	1.7E+00	2.3E-02	ND	1.7E+00	2.6E-02
1,2-dichloroethane	(H)	ND	8.2E-02	9.4E-04	ND	8.7E-02	1.1E-03	ND	8.6E-02	8.3E-04	ND	8.5E-02	9.7E-04
cis-1,2-dichloroethylene		ND	8.2E-02	9.2E-04	ND	8.7E-02	1.1E-03	ND	8.6E-02	8.2E-04	ND	8.5E-02	9.5E-04
formaldehyde	(H)	ND	1.9E-01	6.7E-04	ND	2.0E-01	7.9E-04	ND	1.8E-01	5.4E-04	ND	1.9E-01	6.7E-04
limonene		ND	1.6E+00	2.6E-02	ND	1.7E+00	3.1E-02	ND	1.7E+00	2.3E-02	ND	1.7E+00	2.7E-02
p-mentha-1,5-diene		ND	1.6E+00	2.6E-02	ND	1.7E+00	3.1E-02	ND	1.7E+00	2.3E-02	ND	1.7E+00	2.7E-02
methanol	(H)	ND	5.7E-01	2.1E-03	ND	5.9E-01	2.5E-03	ND	6.2E-01	1.9E-03	ND	5.9E-01	2.2E-03
methyl ethyl ketone (MEK)	(H)	ND	3.0E-01	2.5E-03	ND	3.1E-01	3.0E-03	ND	3.2E-01	2.3E-03	ND	3.1E-01	2.6E-03
methyl isobutyl ketone	(H)	ND	2.1E-01	2.4E-03	ND	2.2E-01	2.9E-03	ND	2.2E-01	2.2E-03	ND	2.1E-01	2.5E-03
methylene chloride	(H)	ND	8.2E-02	8.0E-04	ND	8.7E-02	9.8E-04	ND	8.6E-02	7.2E-04	ND	8.5E-02	8.3E-04
phenol	(H)	ND	3.7E-01	4.1E-03	ND	3.8E-01	4.8E-03	ND	4.0E-01	3.7E-03	ND	3.8E-01	4.2E-03
alpha-pinene		ND	1.6E+00	2.6E-02	ND	1.7E+00	3.1E-02	ND	1.7E+00	2.3E-02	ND	1.7E+00	2.7E-02
beta-pinene		ND	1.6E+00	2.6E-02	ND	1.7E+00	3.1E-02	ND	1.7E+00	2.3E-02	ND	1.7E+00	2.7E-02
propionaldehyde	(H)	ND	3.4E-01	2.3E-03	ND	3.5E-01	2.7E-03	ND	3.6E-01	2.1E-03	ND	3.5E-01	2.3E-03
styrene	(H)	ND	8.2E-02	9.9E-04	ND	8.7E-02	1.2E-03	ND	8.6E-02	8.8E-04	ND	8.5E-02	1.0E-03
toluene	(H)	ND	8.2E-02	8.7E-04	ND	8.7E-02	1.1E-03	ND	8.6E-02	7.8E-04	ND	8.5E-02	9.0E-04
1,2,4-trichlorobenzene	(H)	ND	8.2E-02	1.7E-03	ND	8.7E-02	2.1E-03	ND	8.6E-02	1.5E-03	ND	8.5E-02	1.8E-03
m,p-xylene	(H)	ND	8.2E-02	1.0E-03	ND	8.7E-02	1.2E-03	ND	8.6E-02	9.0E-04	ND	8.5E-02	1.0E-03
o-xylene	(H)	ND	8.2E-02	1.0E-03	ND	8.7E-02	1.2E-03	ND	8.6E-02	9.0E-04	ND	8.5E-02	1.0E-03
THC as Carbon			4.4E+00	6.1E-03		1.7E+00	2.7E-03		1.8E+00	2.1E-03		2.6E+00	3.7E-03
Total HAPs				0.0E+00			0.0E+00			0.0E+00			0.0E+00
Total Terpenes				0.0E+00			0.0E+00			0.0E+00			0.0E+00
Production Rate (MSF 3/8 /hr)				18.5			18.5			24.9			20.6
Vol. Flow Rate (DSCFM)				1.4E+04			1.6E+04			1.6E+04			1.5E+04
Source Moisture (%)				0.5			0.8			0.9			0.7
Source Temp (°C)				17.8			16.1			16.6			16.8

ND x.xxEx = Below detection limit of x.xxEx; BP = Below practical quantitation limit; IM = Below detection limit in impinger sample; NA = Not analyzed by this method; H = CAA HAP; N = Not a HAP or VOC as defined by US EPA; TM = Start and end times for THC and speciated compounds differ; QA = Failed quality assurance; MSF = 1000 square feet; ODTH = Oven Dried Tons per Hour; AI = Analytical Interference; MLF = 1000 Linear Feet; MCF = 1000 Cubic Feet

Table B81. Summary of Emission Test Results
Hardwood Veneer Dryer, Vent from Second Heated Zone (405-1DV2)

Analyte		405-1DV2N1			405-1DV2N2			405-1DV2N3			Average Emission		
			ppmVd	lb/MSF		ppmVd	lb/MSF		ppmVd	lb/MSF		ppmVd	lb/MSF
acetaldehyde	(H)		2.6E+00	4.6E-03	IM	4.4E-01	6.2E-04		2.0E+00	3.0E-03		1.7E+00	2.8E-03
acetone	(N)	BP	7.7E-01	1.8E-03	BP	3.6E-01	6.5E-04	BP	4.8E-01	9.9E-04		5.4E-01	1.1E-03
acrolein	(H)	AI			AI			AI					
benzene	(H)	ND	7.5E-02	2.3E-04	ND	7.9E-02	1.9E-04	ND	7.5E-02	2.1E-04	ND	7.6E-02	2.1E-04
bromomethane	(H)	ND	7.5E-02	2.8E-04	ND	7.9E-02	2.4E-04	ND	7.5E-02	2.5E-04	ND	7.6E-02	2.6E-04
camphene		ND	1.5E+00	8.1E-03	ND	1.6E+00	6.8E-03	ND	1.5E+00	7.2E-03	ND	1.5E+00	7.4E-03
3-carene		ND	1.5E+00	8.1E-03	ND	1.6E+00	6.8E-03	ND	1.5E+00	7.2E-03	ND	1.5E+00	7.4E-03
chloroethane	(H)	ND	7.5E-02	1.9E-04	ND	7.9E-02	1.6E-04	ND	7.5E-02	1.7E-04	ND	7.6E-02	1.7E-04
chloroethene	(H)	ND	7.5E-02	1.9E-04	ND	7.9E-02	1.6E-04	ND	7.5E-02	1.6E-04	ND	7.6E-02	1.7E-04
cumene	(H)	ND	1.5E+00	7.2E-03	ND	1.6E+00	6.0E-03	ND	1.5E+00	6.3E-03	ND	1.5E+00	6.5E-03
p-cymene		ND	1.5E+00	8.0E-03	ND	1.6E+00	6.7E-03	ND	1.5E+00	7.1E-03	ND	1.5E+00	7.3E-03
1,2-dichloroethane	(H)	ND	7.5E-02	3.0E-04	ND	7.9E-02	2.5E-04	ND	7.5E-02	2.6E-04	ND	7.6E-02	2.7E-04
cis-1,2-dichloroethylene		ND	7.5E-02	2.9E-04	ND	7.9E-02	2.4E-04	ND	7.5E-02	2.6E-04	ND	7.6E-02	2.6E-04
formaldehyde	(H)		3.3E+00	3.9E-03	BP	2.3E-01	2.2E-04	ND	1.2E-01	1.3E-04		1.2E+00	1.4E-03
limonene		ND	1.5E+00	8.1E-03	ND	1.6E+00	6.8E-03	ND	1.5E+00	7.2E-03	ND	1.5E+00	7.4E-03
p-mentha-1,5-diene		ND	1.5E+00	8.1E-03	ND	1.6E+00	6.8E-03	ND	1.5E+00	7.2E-03	ND	1.5E+00	7.4E-03
methanol	(H)		6.1E+00	7.7E-03		2.3E+00	2.3E-03		4.1E+00	4.6E-03		4.1E+00	4.9E-03
methyl ethyl ketone (MEK)	(H)	ND	2.8E-01	7.9E-04	ND	2.9E-01	6.6E-04	ND	2.6E-01	6.7E-04	ND	2.8E-01	7.1E-04
methyl isobutyl ketone	(H)	ND	1.9E-01	7.6E-04	ND	2.0E-01	6.4E-04	ND	1.8E-01	6.4E-04	ND	1.9E-01	6.8E-04
methylene chloride	(H)	ND	7.5E-02	2.5E-04	ND	7.9E-02	2.1E-04	ND	7.5E-02	2.2E-04	ND	7.6E-02	2.3E-04
phenol	(H)	ND	3.4E-01	1.3E-03	ND	3.6E-01	1.1E-03	ND	3.2E-01	1.1E-03	ND	3.4E-01	1.1E-03
alpha-pinene		ND	1.5E+00	8.1E-03	ND	1.6E+00	6.8E-03	ND	1.5E+00	7.2E-03	ND	1.5E+00	7.4E-03
beta-pinene		ND	1.5E+00	8.1E-03	ND	1.6E+00	6.8E-03	ND	1.5E+00	7.2E-03	ND	1.5E+00	7.4E-03
propionaldehyde	(H)	ND	3.1E-01	7.1E-04	ND	3.2E-01	5.9E-04	ND	2.9E-01	6.0E-04	ND	3.1E-01	6.4E-04
styrene	(H)	ND	7.5E-02	3.1E-04	ND	7.9E-02	2.6E-04	ND	7.5E-02	2.7E-04	ND	7.6E-02	2.8E-04
toluene	(H)	ND	7.5E-02	2.7E-04	ND	7.9E-02	2.3E-04	ND	7.5E-02	2.4E-04	ND	7.6E-02	2.5E-04
1,2,4-trichlorobenzene	(H)	ND	7.5E-02	5.4E-04	ND	7.9E-02	4.5E-04	ND	7.5E-02	4.8E-04	ND	7.6E-02	4.9E-04
m,p-xylene	(H)	ND	7.5E-02	3.2E-04	ND	7.9E-02	2.6E-04	ND	7.5E-02	2.8E-04	ND	7.6E-02	2.9E-04
o-xylene	(H)	ND	7.5E-02	3.2E-04	ND	7.9E-02	2.6E-04	ND	7.5E-02	2.8E-04	ND	7.6E-02	2.9E-04
THC as Carbon			5.4E+01	2.6E-02		3.5E+01	1.3E-02		6.2E+01	2.6E-02		5.0E+01	2.2E-02
Total HAPs				1.6E-02			3.1E-03			7.6E-03			9.0E-03
Total Terpenes				0.0E+00			0.0E+00			0.0E+00			0.0E+00
Production Rate (MSF 3/8 /hr)				18.5			18.5			24.9			20.6
Vol. Flow Rate (DSCFM)				4.7E+03			3.8E+03			5.6E+03			4.7E+03
Source Moisture (%)				19.0			26.1			26.1			23.7
Source Temp (°C)				145.0			162.2			162.2			156.5

ND x.xxEx = Below detection limit of x.xxEx; BP = Below practical quantitation limit; IM = Below detection limit in impinger sample; NA = Not analyzed by this method; H = CAA HAP; N = Not a HAP or VOC as defined by US EPA; TM = Start and end times for THC and speciated compounds differ; QA = Failed quality assurance; MSF = 1000 square feet; ODTH = Oven Dried Tons per Hour; AI = Analytical Interference; MLF = 1000 Linear Feet; MCF = 1000 Cubic Feet

12/9/99
9:14 AM

Table B82. Summary of Emission Test Results
Hardwood Veneer Dryer, Vent from First Heated Zone (405-1DV3)

Analyte		405-1DV3N1			405-1DV3N2			405-1DV3N3			Average Emission		
			ppmVd	lb/MSF		ppmVd	lb/MSF		ppmVd	lb/MSF		ppmVd	lb/MSF
acetaldehyde	(H)		1.6E+00	5.1E-03	IM	4.5E-01	1.4E-03	IM	4.9E-01	9.6E-04		8.3E-01	2.5E-03
acetone	(N)		1.4E+00	5.8E-03	BP	6.3E-01	2.5E-03	BP	6.8E-01	1.8E-03		8.9E-01	3.4E-03
acrolein	(H)	AI			AI			AI					
benzene	(H)	ND	7.5E-02	4.3E-04	ND	8.0E-02	4.3E-04	ND	8.3E-02	2.9E-04	ND	7.9E-02	3.8E-04
bromomethane	(H)	ND	7.5E-02	5.3E-04	ND	8.0E-02	5.2E-04	ND	8.3E-02	3.5E-04	ND	7.9E-02	4.7E-04
camphene		ND	1.5E+00	1.5E-02	ND	1.6E+00	1.5E-02	ND	1.7E+00	1.0E-02	ND	1.6E+00	1.3E-02
3-carene		ND	1.5E+00	1.5E-02	ND	1.6E+00	1.5E-02	ND	1.7E+00	1.0E-02	ND	1.6E+00	1.3E-02
chloroethane	(H)	ND	7.5E-02	3.6E-04	ND	8.0E-02	3.6E-04	ND	8.3E-02	2.4E-04	ND	7.9E-02	3.2E-04
chloroethene	(H)	ND	7.5E-02	3.5E-04	ND	8.0E-02	3.4E-04	ND	8.3E-02	2.3E-04	ND	7.9E-02	3.1E-04
cumene	(H)	ND	1.5E+00	1.3E-02	ND	1.6E+00	1.3E-02	ND	1.7E+00	8.9E-03	ND	1.6E+00	1.2E-02
p-cymene		ND	1.5E+00	1.5E-02	ND	1.6E+00	1.5E-02	ND	1.7E+00	9.9E-03	ND	1.6E+00	1.3E-02
1,2-dichloroethane	(H)	ND	7.5E-02	5.5E-04	ND	8.0E-02	5.5E-04	ND	8.3E-02	3.7E-04	ND	7.9E-02	4.9E-04
cis-1,2-dichloroethylene		ND	7.5E-02	5.4E-04	ND	8.0E-02	5.3E-04	ND	8.3E-02	3.6E-04	ND	7.9E-02	4.8E-04
formaldehyde	(H)	ND	1.4E-01	3.2E-04	BP	3.9E-01	8.2E-04		1.7E+00	2.2E-03		6.8E-01	1.0E-03
limonene		ND	1.5E+00	1.5E-02	ND	1.6E+00	1.5E-02	ND	1.7E+00	1.0E-02	ND	1.6E+00	1.3E-02
p-mentha-1,5-diene		ND	1.5E+00	1.5E-02	ND	1.6E+00	1.5E-02	ND	1.7E+00	1.0E-02	ND	1.6E+00	1.3E-02
methanol	(H)	BP	1.6E+00	3.8E-03		2.0E+00	4.4E-03		3.9E+00	5.6E-03		2.5E+00	4.6E-03
methyl ethyl ketone (MEK)	(H)	ND	2.9E-01	1.5E-03	ND	3.1E-01	1.5E-03	ND	3.2E-01	1.0E-03	ND	3.0E-01	1.4E-03
methyl isobutyl ketone	(H)	ND	2.0E-01	1.5E-03	ND	2.1E-01	1.5E-03	ND	2.2E-01	9.8E-04	ND	2.1E-01	1.3E-03
methylene chloride	(H)	ND	7.5E-02	4.7E-04	ND	8.0E-02	4.7E-04	ND	8.3E-02	3.1E-04	ND	7.9E-02	4.2E-04
phenol	(H)	ND	3.6E-01	2.5E-03	ND	3.8E-01	2.5E-03	ND	3.9E-01	1.7E-03	ND	3.8E-01	2.2E-03
alpha-pinene		ND	1.5E+00	1.5E-02	ND	1.6E+00	1.5E-02	ND	1.7E+00	1.0E-02	ND	1.6E+00	1.3E-02
beta-pinene		ND	1.5E+00	1.5E-02	ND	1.6E+00	1.5E-02	ND	1.7E+00	1.0E-02	ND	1.6E+00	1.3E-02
propionaldehyde	(H)	ND	3.2E-01	1.4E-03	ND	3.4E-01	1.4E-03	ND	3.6E-01	9.2E-04	ND	3.4E-01	1.2E-03
styrene	(H)	ND	7.5E-02	5.8E-04	ND	8.0E-02	5.7E-04	ND	8.3E-02	3.9E-04	ND	7.9E-02	5.1E-04
toluene	(H)	ND	7.5E-02	5.1E-04	ND	8.0E-02	5.1E-04	ND	8.3E-02	3.4E-04	ND	7.9E-02	4.5E-04
1,2,4-trichlorobenzene	(H)	ND	7.5E-02	1.0E-03	ND	8.0E-02	1.0E-03	ND	8.3E-02	6.7E-04	ND	7.9E-02	8.9E-04
m,p-xylene	(H)	ND	7.5E-02	5.9E-04	ND	8.0E-02	5.8E-04	ND	8.3E-02	3.9E-04	ND	7.9E-02	5.2E-04
o-xylene	(H)	ND	7.5E-02	5.9E-04	ND	8.0E-02	5.8E-04	ND	8.3E-02	3.9E-04	ND	7.9E-02	5.2E-04
THC as Carbon			4.5E+01	4.0E-02		3.1E+01	2.6E-02		5.4E+01	2.9E-02		4.3E+01	3.1E-02
Total HAPs				8.9E-03			6.6E-03			8.8E-03			8.1E-03
Total Terpenes				0.0E+00			0.0E+00			0.0E+00			0.0E+00
Production Rate (MSF 3/8 /hr)				18.5			18.5			24.9			20.6
Vol. Flow Rate (DSCFM)				8.8E+03			8.2E+03			7.2E+03			8.1E+03
Source Moisture (%)				16.5			16.2			17.7			16.8
Source Temp (°C)				148.6			128.9			137.5			138.3

ND x.xxEx = Below detection limit of x.xxEx; BP = Below practical quantitation limit; IM = Below detection limit in impinger sample; NA = Not analyzed by this method; H = CAA HAP; N = Not a HAP or VOC as defined by US EPA; TM = Start and end times for THC and speciated compounds differ; QA = Failed quality assurance; MSF = 1000 square feet; ODTH = Oven Dried Tons per Hour; AI = Analytical Interference; MLF = 1000 Linear Feet; MCF = 1000 Cubic Feet

Table B83. Summary of Emission Test Results
Hardwood Plywood Hot Press, No. 1 Press Vent (405-1PB1)

Analyte		405-1PB1N1			405-1PB1N2			405-1PB1N3			Average Emission		
			ppmVd	lb/MSF		ppmVd	lb/MSF		ppmVd	lb/MSF		ppmVd	lb/MSF
acetaldehyde	(H)	ND	3.9E-01	1.4E-02	ND	4.0E-01	1.2E-02	ND	4.2E-01	1.0E-02	ND	4.0E-01	1.2E-02
acetone	(N)		1.7E+00	7.9E-02		8.9E-01	3.4E-02	BP	4.8E-01	1.6E-02		1.0E+00	4.3E-02
acrolein	(H)	ND	2.8E-01	1.3E-02	ND	2.8E-01	1.0E-02	ND	2.9E-01	9.1E-03	ND	2.8E-01	1.1E-02
benzene	(H)	ND	7.5E-02	4.7E-03	ND	7.6E-02	3.9E-03	ND	7.3E-02	3.2E-03	ND	7.5E-02	4.0E-03
bromomethane	(H)	ND	7.5E-02	5.8E-03	ND	7.6E-02	4.8E-03	ND	7.3E-02	3.9E-03	ND	7.5E-02	4.8E-03
camphene		ND	1.5E+00	1.7E-01	ND	1.5E+00	1.4E-01	ND	1.5E+00	1.1E-01	ND	1.5E+00	1.4E-01
3-carene		ND	1.5E+00	1.7E-01	ND	1.5E+00	1.4E-01	ND	1.5E+00	1.1E-01	ND	1.5E+00	1.4E-01
chloroethane	(H)	ND	7.5E-02	3.9E-03	ND	7.6E-02	3.2E-03	ND	7.3E-02	2.6E-03	ND	7.5E-02	3.3E-03
chloroethene	(H)	ND	7.5E-02	3.8E-03	ND	7.6E-02	3.1E-03	ND	7.3E-02	2.6E-03	ND	7.5E-02	3.2E-03
cumene	(H)	ND	1.5E+00	1.5E-01	ND	1.5E+00	1.2E-01	ND	1.5E+00	9.8E-02	ND	1.5E+00	1.2E-01
p-cymene		ND	1.5E+00	1.6E-01	ND	1.5E+00	1.3E-01	ND	1.5E+00	1.1E-01	ND	1.5E+00	1.4E-01
1,2-dichloroethane	(H)	ND	7.5E-02	6.0E-03	ND	7.6E-02	5.0E-03	ND	7.3E-02	4.0E-03	ND	7.5E-02	5.0E-03
cis-1,2-dichloroethylene		ND	7.5E-02	5.9E-03	ND	7.6E-02	4.9E-03	ND	7.3E-02	4.0E-03	ND	7.5E-02	4.9E-03
formaldehyde	(H)	ND	1.2E-01	3.0E-03	ND	1.3E-01	2.6E-03	ND	1.3E-01	2.2E-03	ND	1.3E-01	2.6E-03
limonene		ND	1.5E+00	1.7E-01	ND	1.5E+00	1.4E-01	ND	1.5E+00	1.1E-01	ND	1.5E+00	1.4E-01
p-mentha-1,5-diene		ND	1.5E+00	1.7E-01	ND	1.5E+00	1.4E-01	ND	1.5E+00	1.1E-01	ND	1.5E+00	1.4E-01
methanol	(H)	BP	1.0E+00	2.6E-02	BP	1.1E+00	2.2E-02	ND	5.5E-01	9.8E-03		6.9E-01	1.6E-02
methyl ethyl ketone (MEK)	(H)	ND	2.7E-01	1.6E-02	ND	2.7E-01	1.3E-02	ND	2.8E-01	1.1E-02	ND	2.8E-01	1.3E-02
methyl isobutyl ketone	(H)	ND	1.9E-01	1.5E-02	ND	1.9E-01	1.3E-02	ND	1.9E-01	1.1E-02	ND	1.9E-01	1.3E-02
methylene chloride	(H)	ND	7.5E-02	5.2E-03	ND	7.6E-02	4.3E-03	ND	7.3E-02	3.5E-03	ND	7.5E-02	4.3E-03
phenol	(H)	ND	3.3E-01	2.6E-02	ND	3.4E-01	2.1E-02	ND	3.5E-01	1.9E-02	ND	3.4E-01	2.2E-02
alpha-pinene		ND	1.5E+00	1.7E-01	ND	1.5E+00	1.4E-01	ND	1.5E+00	1.1E-01	ND	1.5E+00	1.4E-01
beta-pinene		ND	1.5E+00	1.7E-01	ND	1.5E+00	1.4E-01	ND	1.5E+00	1.1E-01	ND	1.5E+00	1.4E-01
propionaldehyde	(H)	ND	3.0E-01	1.4E-02	ND	3.0E-01	1.2E-02	ND	3.2E-01	1.0E-02	ND	3.1E-01	1.2E-02
styrene	(H)	ND	7.5E-02	6.3E-03	ND	7.6E-02	5.2E-03	ND	7.3E-02	4.3E-03	ND	7.5E-02	5.3E-03
toluene	(H)	ND	7.5E-02	5.6E-03	ND	7.6E-02	4.6E-03	ND	7.3E-02	3.8E-03	ND	7.5E-02	4.7E-03
1,2,4-trichlorobenzene	(H)	ND	7.5E-02	1.1E-02	ND	7.6E-02	9.1E-03	ND	7.3E-02	7.4E-03	ND	7.5E-02	9.2E-03
m,p-xylene	(H)	ND	7.5E-02	6.4E-03	ND	7.6E-02	5.3E-03	ND	7.3E-02	4.3E-03	ND	7.5E-02	5.4E-03
o-xylene	(H)	ND	7.5E-02	6.4E-03	ND	7.6E-02	5.3E-03	ND	7.3E-02	4.3E-03	ND	7.5E-02	5.4E-03
THC as Carbon			1.2E+01	1.2E-01		1.1E+01	9.1E-02		7.9E+00	5.3E-02		1.1E+01	8.8E-02
Total HAPs				2.6E-02			2.2E-02			0.0E+00			1.6E-02
Total Terpenes				0.0E+00			0.0E+00			0.0E+00			0.0E+00
Production Rate (MSF 3/8 /hr)				6.1			7.7			9.2			7.7
Vol. Flow Rate (DSCFM)				3.2E+04			3.3E+04			3.3E+04			3.2E+04
Source Moisture (%)				1.4			1.3			1.7			1.5
Source Temp (°C)				31.2			32.8			38.6			34.2

ND x.xxEx = Below detection limit of x.xxEx; BP = Below practical quantitation limit; IM = Below detection limit in impinger sample; NA = Not analyzed by this method; H = CAA HAP; N = Not a HAP or VOC as defined by US EPA; TM = Start and end times for THC and speciated compounds differ; QA = Failed quality assurance; MSF = 1000 square feet; ODTH = Oven Dried Tons per Hour; AI = Analytical Interference; MLF = 1000 Linear Feet; MCF = 1000 Cubic Feet

12/9/99
9:14 AM

Table B84. Summary of Emission Test Results
Hardwood Plywood Hot Press, No. 2 and 3 Press Vents (405-XPB1)

Analyte		405-XPB1N1			405-XPB1N2			405-XPB1N3			Average Emission		
			ppmVd	lb/MSF		ppmVd	lb/MSF		ppmVd	lb/MSF		ppmVd	lb/MSF
acetaldehyde	(H)	ND	4.2E-01	7.9E-03	ND	4.5E-01	7.8E-03	ND	4.4E-01	5.0E-03	ND	4.4E-01	6.9E-03
acetone	(N)		1.0E+00	2.5E-02	BP	8.3E-01	1.9E-02	BP	6.3E-01	9.4E-03		8.3E-01	1.8E-02
acrolein	(H)	ND	2.9E-01	7.0E-03	ND	3.1E-01	6.9E-03	ND	3.1E-01	4.4E-03	ND	3.1E-01	6.1E-03
benzene	(H)	ND	8.0E-02	2.6E-03	ND	8.2E-02	2.5E-03	ND	7.9E-02	1.6E-03	ND	8.1E-02	2.3E-03
bromomethane	(H)	ND	8.0E-02	3.2E-03	ND	8.2E-02	3.1E-03	ND	7.9E-02	1.9E-03	ND	8.1E-02	2.7E-03
camphene		ND	1.6E+00	9.2E-02	ND	1.6E+00	8.8E-02	ND	1.6E+00	5.5E-02	ND	1.6E+00	7.9E-02
3-carene		ND	1.6E+00	9.2E-02	ND	1.6E+00	8.8E-02	ND	1.6E+00	5.5E-02	ND	1.6E+00	7.9E-02
chloroethane	(H)	ND	8.0E-02	2.2E-03	ND	8.2E-02	2.1E-03	ND	7.9E-02	1.3E-03	ND	8.1E-02	1.9E-03
chloroethene	(H)	ND	8.0E-02	2.1E-03	ND	8.2E-02	2.0E-03	ND	7.9E-02	1.3E-03	ND	8.1E-02	1.8E-03
cumene	(H)	ND	1.6E+00	8.1E-02	ND	1.6E+00	7.8E-02	ND	1.6E+00	4.9E-02	ND	1.6E+00	6.9E-02
p-cymene		ND	1.6E+00	9.1E-02	ND	1.6E+00	8.7E-02	ND	1.6E+00	5.4E-02	ND	1.6E+00	7.7E-02
1,2-dichloroethane	(H)	ND	8.0E-02	3.4E-03	ND	8.2E-02	3.2E-03	ND	7.9E-02	2.0E-03	ND	8.1E-02	2.9E-03
cis-1,2-dichloroethylene		ND	8.0E-02	3.3E-03	ND	8.2E-02	3.1E-03	ND	7.9E-02	2.0E-03	ND	8.1E-02	2.8E-03
formaldehyde	(H)		4.9E-01	6.2E-03	BP	5.4E-01	6.4E-03	BP	2.5E-01	1.9E-03		4.3E-01	4.8E-03
limonene		ND	1.6E+00	9.2E-02	ND	1.6E+00	8.8E-02	ND	1.6E+00	5.5E-02	ND	1.6E+00	7.9E-02
p-mentha-1,5-diene		ND	1.6E+00	9.2E-02	ND	1.6E+00	8.8E-02	ND	1.6E+00	5.5E-02	ND	1.6E+00	7.9E-02
methanol	(H)		1.7E+00	2.3E-02	BP	1.5E+00	1.9E-02	ND	5.8E-01	4.8E-03		1.1E+00	1.4E-02
methyl ethyl ketone (MEK)	(H)	ND	2.9E-01	8.8E-03	ND	3.1E-01	8.7E-03	ND	3.0E-01	5.6E-03	ND	3.0E-01	7.7E-03
methyl isobutyl ketone	(H)	ND	2.0E-01	8.5E-03	ND	2.1E-01	8.3E-03	ND	2.1E-01	5.3E-03	ND	2.1E-01	7.4E-03
methylene chloride	(H)	ND	8.0E-02	2.9E-03	ND	8.2E-02	2.8E-03	ND	7.9E-02	1.7E-03	ND	8.1E-02	2.5E-03
phenol	(H)	BP	4.5E-01	1.8E-02	BP	5.1E-01	1.9E-02	BP	4.5E-01	1.1E-02		4.7E-01	1.6E-02
alpha-pinene		ND	1.6E+00	9.2E-02	ND	1.6E+00	8.8E-02	ND	1.6E+00	5.5E-02	ND	1.6E+00	7.9E-02
beta-pinene		ND	1.6E+00	9.2E-02	ND	1.6E+00	8.8E-02	ND	1.6E+00	5.5E-02	ND	1.6E+00	7.9E-02
propionaldehyde	(H)	ND	3.2E-01	7.9E-03	ND	3.4E-01	7.8E-03	ND	3.4E-01	5.0E-03	ND	3.3E-01	6.9E-03
styrene	(H)	ND	8.0E-02	3.5E-03	ND	8.2E-02	3.4E-03	ND	7.9E-02	2.1E-03	ND	8.1E-02	3.0E-03
toluene	(H)	ND	8.0E-02	3.1E-03	ND	8.2E-02	3.0E-03	ND	7.9E-02	1.9E-03	ND	8.1E-02	2.7E-03
1,2,4-trichlorobenzene	(H)	ND	8.0E-02	6.1E-03	ND	8.2E-02	5.9E-03	ND	7.9E-02	3.7E-03	ND	8.1E-02	5.2E-03
m,p-xylene	(H)	ND	8.0E-02	3.6E-03	ND	8.2E-02	3.4E-03	ND	7.9E-02	2.2E-03	ND	8.1E-02	3.1E-03
o-xylene	(H)	ND	8.0E-02	3.6E-03	ND	8.2E-02	3.4E-03	ND	7.9E-02	2.2E-03	ND	8.1E-02	3.1E-03
THC as Carbon			1.2E+01	6.3E-02		1.4E+01	6.6E-02		1.4E+01	4.2E-02		1.3E+01	5.7E-02
Total HAPs				4.7E-02			4.4E-02			1.3E-02			3.5E-02
Total Terpenes				0.0E+00			0.0E+00			0.0E+00			0.0E+00
Production Rate (MSF 3/8 /hr)				13.1			13.8			21.5			16.1
Vol. Flow Rate (DSCFM)				3.6E+04			3.5E+04			3.5E+04			3.5E+04
Source Moisture (%)				1.3			1.4			1.3			1.3
Source Temp (°C)				29.7			31.1			31.9			30.9

ND x.xxEx = Below detection limit of x.xxEx; BP = Below practical quantitation limit; IM = Below detection limit in impinger sample; NA = Not analyzed by this method; H = CAA HAP; N = Not a HAP or VOC as defined by US EPA; TM = Start and end times for THC and speciated compounds differ; QA = Failed quality assurance; MSF = 1000 square feet; ODTH = Oven Dried Tons per Hour; AI = Analytical Interference; MLF = 1000 Linear Feet; MCF = 1000 Cubic Feet

Table B85. Summary of Emission Test Results
Combined Dust Baghouse, Vent (405-1SI1)

Analyte		405-1SI1N1			405-1SI1N2			405-1SI1N3			Average Emission		
			ppmVd	lb/MSF		ppmVd	lb/MSF		ppmVd	lb/MSF		ppmVd	lb/MSF
acetaldehyde	(H)	ND	4.5E-01	2.8E-03	ND	4.6E-01	2.9E-03	ND	4.8E-01	4.6E-03	ND	4.6E-01	3.4E-03
acetone	(N)		1.2E+00	9.5E-03		1.3E+00	1.1E-02	BP	5.2E-01	6.6E-03		9.8E-01	8.9E-03
acrolein	(H)	ND	3.1E-01	2.5E-03	ND	3.2E-01	2.6E-03	ND	3.3E-01	4.0E-03	ND	3.2E-01	3.0E-03
benzene	(H)	ND	8.0E-02	8.8E-04	ND	8.3E-02	9.3E-04	ND	7.8E-02	1.3E-03	ND	8.0E-02	1.0E-03
bromomethane	(H)	ND	8.0E-02	1.1E-03	ND	8.3E-02	1.1E-03	ND	7.8E-02	1.6E-03	ND	8.0E-02	1.3E-03
camphene		ND	1.6E+00	3.1E-02	ND	1.7E+00	3.2E-02	ND	1.6E+00	4.6E-02	ND	1.6E+00	3.6E-02
3-carene		ND	1.6E+00	3.1E-02	ND	1.7E+00	3.2E-02	ND	1.6E+00	4.6E-02	ND	1.6E+00	3.6E-02
chloroethane	(H)	ND	8.0E-02	7.3E-04	ND	8.3E-02	7.7E-04	ND	7.8E-02	1.1E-03	ND	8.0E-02	8.6E-04
chloroethene	(H)	ND	8.0E-02	7.0E-04	ND	8.3E-02	7.4E-04	ND	7.8E-02	1.1E-03	ND	8.0E-02	8.3E-04
cumene	(H)	ND	1.6E+00	2.7E-02	ND	1.7E+00	2.9E-02	ND	1.6E+00	4.0E-02	ND	1.6E+00	3.2E-02
p-cymene		ND	1.6E+00	3.0E-02	ND	1.7E+00	3.2E-02	ND	1.6E+00	4.5E-02	ND	1.6E+00	3.6E-02
1,2-dichloroethane	(H)	ND	8.0E-02	1.1E-03	ND	8.3E-02	1.2E-03	ND	7.8E-02	1.7E-03	ND	8.0E-02	1.3E-03
cis-1,2-dichloroethylene		ND	8.0E-02	1.1E-03	ND	8.3E-02	1.2E-03	ND	7.8E-02	1.6E-03	ND	8.0E-02	1.3E-03
formaldehyde	(H)	ND	1.7E-01	7.1E-04	ND	1.7E-01	7.1E-04	ND	1.8E-01	1.2E-03	ND	1.7E-01	8.7E-04
limonene		ND	1.6E+00	3.1E-02	ND	1.7E+00	3.2E-02	ND	1.6E+00	4.6E-02	ND	1.6E+00	3.6E-02
p-mentha-1,5-diene		ND	1.6E+00	3.1E-02	ND	1.7E+00	3.2E-02	ND	1.6E+00	4.6E-02	ND	1.6E+00	3.6E-02
methanol	(H)	BP	1.2E+00	5.2E-03	ND	6.0E-01	2.8E-03	ND	6.4E-01	4.4E-03		3.8E-01	1.7E-03
methyl ethyl ketone (MEK)	(H)	ND	3.1E-01	3.1E-03	ND	3.1E-01	3.2E-03	ND	3.3E-01	5.1E-03	ND	3.1E-01	3.8E-03
methyl isobutyl ketone	(H)	ND	2.1E-01	3.0E-03	ND	2.1E-01	3.1E-03	ND	2.2E-01	4.8E-03	ND	2.1E-01	3.6E-03
methylene chloride	(H)	ND	8.0E-02	9.5E-04	ND	8.3E-02	1.0E-03	ND	7.8E-02	1.4E-03	ND	8.0E-02	1.1E-03
phenol	(H)	ND	3.8E-01	5.0E-03	ND	3.9E-01	5.2E-03	ND	4.1E-01	8.3E-03	ND	3.9E-01	6.2E-03
alpha-pinene		ND	1.6E+00	3.1E-02	ND	1.7E+00	3.2E-02	ND	1.6E+00	4.6E-02	ND	1.6E+00	3.6E-02
beta-pinene		ND	1.6E+00	3.1E-02	ND	1.7E+00	3.2E-02	ND	1.6E+00	4.6E-02	ND	1.6E+00	3.6E-02
propionaldehyde	(H)	ND	3.4E-01	2.8E-03	ND	3.5E-01	2.9E-03	ND	3.6E-01	4.6E-03	ND	3.5E-01	3.4E-03
styrene	(H)	ND	8.0E-02	1.2E-03	ND	8.3E-02	1.2E-03	ND	7.8E-02	1.8E-03	ND	8.0E-02	1.4E-03
toluene	(H)	ND	8.0E-02	1.0E-03	ND	8.3E-02	1.1E-03	ND	7.8E-02	1.6E-03	ND	8.0E-02	1.2E-03
1,2,4-trichlorobenzene	(H)	ND	8.0E-02	2.0E-03	ND	8.3E-02	2.2E-03	ND	7.8E-02	3.1E-03	ND	8.0E-02	2.4E-03
m,p-xylene	(H)	ND	8.0E-02	1.2E-03	ND	8.3E-02	1.3E-03	ND	7.8E-02	1.8E-03	ND	8.0E-02	1.4E-03
o-xylene	(H)	ND	8.0E-02	1.2E-03	ND	8.3E-02	1.3E-03	ND	7.8E-02	1.8E-03	ND	8.0E-02	1.4E-03
THC as Carbon			1.1E+01	1.9E-02		1.2E+01	2.1E-02		6.7E+00	1.7E-02		1.0E+01	1.9E-02
Total HAPs				5.2E-03			0.0E+00			0.0E+00			1.7E-03
Total Terpenes				0.0E+00			0.0E+00			0.0E+00			0.0E+00
Production Rate (MSF 3/8 /hr)				41.4			40.4			27.4			36.4
Vol. Flow Rate (DSCFM)				3.7E+04			3.7E+04			3.8E+04			3.8E+04
Source Moisture (%)				1.4			1.7			2.0			1.7
Source Temp (°C)				28.1			25.5			22.4			25.4

ND x.xxEx = Below detection limit of x.xxEx; BP = Below practical quantitation limit; IM = Below detection limit in impinger sample; NA = Not analyzed by this method; H = CAA HAP; N = Not a HAP or VOC as defined by US EPA; TM = Start and end times for THC and speciated compounds differ; QA = Failed quality assurance; MSF = 1000 square feet; ODTH = Oven Dried Tons per Hour; AI = Analytical Interference; MLF = 1000 Linear Feet; MCF = 1000 Cubic Feet

12/9/99
9:15 AM

APPENDIX C

DETAILED PROCESS LIQUID SAMPLES ANALYSIS RESULTS

Table C1. Softwood Veneer Dryer WESP Quench Water (XDV1L), Douglas Fir Furnish, Mill 112				
	Run 1	Run 2	Run 3	Average
Date	7/29/97	7/29/97	7/29/97	
Time	1315	1550	1800	
Compound				
Acetaldehyde, mg/L	3.78	4.75	4.5	4.34
Acetone, mg/L	9.66	10.23	9.43	9.77
Acrolein, mg/L	AI	AI	AI	AI
Methanol, mg/L	5.69	6.01	5.45	5.72
Methyl Ethyl Ketone, mg/L	0.80	1.14	1.28	1.07
Methyl Isobutyl Ketone, mg/L	ND 0.12	ND 0.12	0.39	0.13
Phenol, mg/L	ND 0.26	ND 0.26	ND 0.26	ND 0.26
Propionaldehyde, mg/L	ND 0.14	ND 0.14	ND 0.14	ND 0.14

AI - Analytical Interference
ND - below detection limit of x.xx

Table C2. Softwood Veneer Dryer WESP Quench Water (XDV1L), Pine/Fir Furnish, Mill 112				
	Run 4	Run 5	Run 6	Average
Date	7/31/97	7/31/97	8/1/97	
Time	1300	1400	1000	
Compound				
Acetaldehyde, mg/L	5.01	5.92	5.42	5.45
Acetone, mg/L	9.84	10.97	10.6	10.47
Acrolein, mg/L	AI	AI	AI	AI
Methanol, mg/L	6.65	6.71	5.45	6.27
Methyl Ethyl Ketone, mg/L	0.89	1.4	1.3	1.20
Methyl Isobutyl Ketone, mg/L	0.27	0.31	0.33	0.30
Phenol, mg/L	ND 0.26	ND 0.26	ND 0.26	ND 0.26
Propionaldehyde, mg/L	ND 0.14	ND 0.14	ND 0.14	ND 0.14

AI - Analytical Interference
ND - below detection limit of x.xx

Table C3. WESP Stack Sump Condensate (XDV2L), Douglas Fir Furnish, Mill 112				
	Run 1	Run 2	Run 3	Average
Date	7/29/97	7/29/97	7/29/97	
Time	1320	1555	1805	
Compound				
Acetaldehyde, mg/L	0.45	0.56	0.46	0.49
Acetone, mg/L	1.4	1.6	1.38	1.46
Acrolein, mg/L	AI	AI	AI	AI
Methanol, mg/L	4.01	4.49	3.33	3.94
Methyl Ethyl Ketone, mg/L	ND 0.15	ND 0.15	ND 0.15	ND 0.15
Methyl Isobutyl Ketone, mg/L	0.67	0.61	0.67	0.65
Phenol, mg/L	ND 0.26	ND 0.26	ND 0.26	ND 0.26
Propionaldehyde, mg/L	ND 0.14	ND 0.14	ND 0.14	ND 0.14

AI - Analytical Interference
ND - below detection limit of x.xx

Table C4. WESP Stack Sump Condensate (XDV2L), Pine/Fir Furnish, Mill 112				
	Run 4	Run 5	Run 6	Average
Date	7/31/97	7/31/97	8/1/97	
Time	1305	1405	1000	
Compound				
Acetaldehyde, mg/L	1	0.84	0.8	0.88
Acetone, mg/L	4.76	2.75	3.61	3.71
Acrolein, mg/L	AI	AI	AI	AI
Methanol, mg/L	6.43	5.69	5.2	5.77
Methyl Ethyl Ketone, mg/L	ND 0.15	ND 0.15	ND 0.15	ND 0.15
Methyl Isobutyl Ketone, mg/L	ND 0.12	0.77	0.6	0.50
Phenol, mg/L	ND 0.26	ND 0.26	ND 0.26	ND 0.26
Propionaldehyde, mg/L	ND 0.14	ND 0.14	ND 0.14	ND 0.14

AI - Analytical Interference
ND - below detection limit of x.xx

Table C5. Log Steaming Vat Contents (1ML1L), Mill 112				
	Run 1	Run 2	Run 3	Average
Date	7/28/97	7/28/97	7/28/97	
Time	1130	1300	1430	
Compound				
Acetaldehyde, mg/L	1.5	2.06	1.46	1.67
Acetone, mg/L	1.02	1.93	1.42	1.46
Acrolein, mg/L	AI	AI	AI	AI
Methanol, mg/L	6.37	8.75	6.09	7.07
Methyl Ethyl Ketone, mg/L	0.65	0.93	1.03	0.87
Methyl Isobutyl Ketone, mg/L	0.17	ND 0.12	ND 0.12	0.06
Phenol, mg/L	ND 0.26	ND 0.26	ND 0.26	ND 0.26
Propionaldehyde, mg/L	ND 0.14	ND 0.14	ND 0.14	ND 0.14

AI - Analytical Interference
ND - below detection limit of x.xx