Note: This is a reference cited in *AP 42, Compilation of Air Pollutant Emission Factors, Volume I Stationary Point and Area Sources.* AP42 is located on the EPA web site at www.epa.gov/ttn/chief/ap42/

The file name refers to the reference number, the AP42 chapter and section. The file name "ref02_c01s02.pdf" would mean the reference is from AP42 chapter 1 section 2. The reference may be from a previous version of the section and no longer cited. The primary source should always be checked.

AP42 Section:	10.5
Reference:	10
Title:	*Alternative Control Technology Document--PM-10 Emissions From The Wood Products Industry: Plywood Manufacturing, Draft*, U. S. Environmental Protection Agency, Research Triangle Park, NC, September 1992. 2002 supplement

EPA-_____

DRAFT

Alternative Control Technology Document-- PM-10 Emissions from the Wood Products Industry:

Plywood Manufacturing

Emission Standards Division

U. S. ENVIRONMENTAL PROTECTION AGENCY
Office of Air and Radiation
Office of Air Quality Planning and Standards
Research Triangle Park, North Carolina 27711
September 1992

EPA-_____

DRAFT

Alternative Control Technology Document-- PM-10 Emissions from the Wood Products Industry:

Plywood Manufacturing

Emission Standards Division

U. S. ENVIRONMENTAL PROTECTION AGENCY
Office of Air and Radiation
Office of Air Quality Planning and Standards
Research Triangle Park, North Carolina 27711
September 1992

ALTERNATIVE CONTROL TECHNOLOGY DOCUMENTS

This report is issued by the Emission Standards Division, Office of Air Quality Planning and Standards, U. S. Environmental Protection Agency, to provide information to State and local air pollution control agencies. Mention of trade names or commercial products is not intended to constitute endorsement or recommendation for use.

TABLE OF CONTENTS

		Page
1.0	INTRODUCTION	1-1
2.0	SOURCES AND POLLUTANT EMISSIONS	2-1
2.1	INDUSTRY DESCRIPTION	2-1
2.2	PROCESS DESCRIPTION	2-7
2.2.1	Wood Preparation	2-10
2.2.2	Gluing and Pressing	2-13
2.2.3	Finishing	2-16
2.2.4	Auxiliary Processes	2-16
2.3	PM-10 SOURCE DESCRIPTION	2-17
2.3.1	Veneer Cutting	2-19
2.3.2	Veneer Drying	2-19
2.3.3	Gluing	2-19
2.3.4	Hot Pressing	2-20
2.3.5	Sanding	2-20
2.3.6	Heat Generation	2-20
2.3.7	Auxiliary Processes	2-20
2.3.8	Additional Sources of PM-10	2-21
2.4	MODEL PLANTS AND BASELINE EMISSIONS	2-21
2.4.1	Sizing Basis	2-22
2.4.2	Airflow Rates	2-24
2.4.3	Baseline Emissions	2-24
2.5	REFERENCES FOR CHAPTER 2	2-27
3.0	EMISSION CONTROL TECHNIQUES	3-1
3.1	CONTROL TECHNIQUES FOR DRYER PM-10 EMISSIONS	3-3
3.1.1	Emission Stream Characteristics	3-3
3.1.2	Demonstrated Control Techniques	3-3
3.1.3	Pollution Prevention Techniques	3-19
3.2	CONTROL TECHNIQUES FOR BOILER PM-10 EMISSIONS	3-26
3.2.1	Emission Stream Characteristics	3-27
3.2.2	Demonstrated Control Techniques	3-28
3.3	CONTROL OF SANDING AND TRIMMING PM-10 EMISSIONS	3-35

TABLE OF CONTENTS (continued)

Page

3.4 CONTROL TECHNIQUES FOR NONPROCESS FUGITIVE PM-10 EMISSIONS 3-35

3.4.1 Enclosures 3-36
3.4.2 Wet Suppression Systems 3-36
3.4.3 Chemical Stabilization 3-37

3.5 REFERENCES FOR CHAPTER 3 3-38

4.0 ENVIRONMENTAL IMPACTS ANALYSIS 4-1

4.1 INTRODUCTION 4-1

4.2 PM-10 EMISSION REDUCTION 4-1
4.2.1 Veneer Dryer 4-2
4.2.2 Wood Waste-Fired Boiler 4-2

4.3 GENERATION OF WASTE WATER 4-7

4.4 GENERATION OF SOLID WASTE 4-9

4.5 ENERGY IMPACTS 4-16

4.6 REFERENCES FOR CHAPTER 4 4-20

5.0 CONTROL COST ANALYSIS 5-1

5.1 INTRODUCTION 5-1

5.2 COST EVALUATION METHODOLOGY 5-2
5.2.1 Capital Cost Estimation 5-2
5.2.2 Annual Costs 5-5
5.2.3 Estimation of Control Device Cost Effectiveness 5-12

5.3 VENEER DRYER 5-13
5.3.1 Ionizing Wet Scrubbers 5-13
5.3.2 Wet ESP 5-13
5.3.3 Electrified Filter Bed 5-18

TABLE OF CONTENTS (continued)

		Page
5.4	WOOD WASTE-FIRED BOILER	5-19
	5.4.1 Fabric Filter	5-19
	5.4.2 Electrostatic Precipitator	5-24
	5.4.3 Electrified Filter Bed	5-24
	5.4.4 Tube-Type Wet ESP	5-24
	5.4.5 Venturi Scrubber	5-25
	5.4.6 Multiclone	5-25
5.5	REFERENCES FOR CHAPTER 5	5-25

LIST OF FIGURES

		Page
Figure 2-1.	Segments of the wood products industry by Standard Industrial Classification Code	2-2
Figure 2-2.	Plywood consumption and production	2-3
Figure 2-3.	Various types of plywood construction . . .	2-9
Figure 2-4.	Two means of cutting veneer	2-12
Figure 2-5.	Principle of the jet (impingement) dryer .	2-14
Figure 3-1.	Schematic of an ionizing wet scrubber . . .	3-7
Figure 3-2.	Schematic of the particle charging section and collection surfaces of an ionizing wet scrubber	3-8
Figure 3-3.	Schematic of a dry electrified filter bed .	3-10
Figure 3-4.	Schematic of an electrified filter bed modified for use at plywood facilities . .	3-12
Figure 3-5.	Schematic of a plate-type wet ESP	3-15
Figure 3-6.	Schematic of the tube-type wet ESP	3-17
Figure 3-7.	Schematic of the disk-in-tube geometry of discharge electrode and collection surface in a tube-type wet ESP	3-18
Figure 3-8.	Flow diagram of a wood-fired dryer system with partial incineration in a fuel cell .	3-22
Figure 3-9.	Flow diagram of a conceptual wood-fired system with complete incineration of dryer exhaust in a fuel cell	3-24
Figure 3-10.	Schematic of a dry electrostatic precipitator	3-29
Figure 3-11.	Schematic of a variable-throat venturi scrubber	3-31
Figure 3-12.	Schematic of a typical pulse-jet fabric filter	3-34

LIST OF TABLES

		Page
TABLE 2-1.	SOFTWOOD VENEER AND PLYWOOD (1987 PRODUCTION)	2-5
TABLE 2-2.	HARDWOOD VENEER AND PLYWOOD (1987 PRODUCTION)	2-6
TABLE 2-3.	ESTIMATED TSP AND PM-10 EMISSION FACTORS FOR PLYWOOD MANUFACTURING PLANTS	2-18
TABLE 2-4.	SOFTWOOD PLYWOOD MODEL PLANTS OPERATING PARAMETERS	2-23
TABLE 2-5.	SUMMARY OF AIRFLOWS FROM POINT SOURCES AT MODEL PLYWOOD PLANTS	2-25
TABLE 2-6.	MODEL SOFTWOOD PLYWOOD AND VENEER PLANT PM-10 EMISSIONS, LB/HR	2-26
TABLE 3-1.	SUMMARY OF PM-10 CONTROL TECHNIQUES APPLICABLE AT PLYWOOD PLANTS	3-2
TABLE 4-1.	UNCONTROLLED PM-10 EMISSION RATES FROM MODEL PLANTS	4-3
TABLE 4-2.	SUMMARY OF UNCONTROLLED AND CONTROLLED PM-10 EMISSIONS FROM THE SMALL MODEL PLANT FOR ALTERNATIVE CONTROL TECHNOLOGIES . . .	4-4
TABLE 4-3.	SUMMARY OF UNCONTROLLED AND CONTROLLED PM-10 EMISSIONS FROM THE MEDIUM MODEL PLANT FOR ALTERNATIVE CONTROL TECHNOLOGIES . . .	4-5
TABLE 4-4.	SUMMARY OF UNCONTROLLED AND CONTROLLED PM-10 EMISSIONS FROM THE LARGE MODEL PLANT FOR ALTERNATIVE CONTROL TECHNOLOGIES . . .	4-6
TABLE 4-5.	ESTIMATED WATER BLOWDOWN RATES ASSOCIATED WITH WET PM-10 EMISSION CONTROL TECHNIQUES AT THE SMALL MODEL PLANT	4-10
TABLE 4-6.	ESTIMATED WATER BLOWDOWN RATES ASSOCIATED WITH WET PM-10 EMISSION CONTROL TECHNIQUES AT THE MEDIUM MODEL PLANT	4-11
TABLE 4-7.	ESTIMATED WATER BLOWDOWN RATES ASSOCIATED WITH WET PM-10 EMISSION CONTROL TECHNIQUES AT THE LARGE MODEL PLANT	4-12

LIST OF TABLES (continued)

		Page
TABLE 4-8.	ESTIMATED SOLID WASTE GENERATION RATES AT THE SMALL MODEL PLANT	4-13
TABLE 4-9.	ESTIMATED SOLID WASTE GENERATION RATES AT THE MEDIUM MODEL PLANT	4-14
TABLE 4-10.	ESTIMATED SOLID WASTE GENERATION RATES AT THE LARGE MODEL PLANT	4-15
TABLE 4-11.	ENERGY REQUIREMENTS ASSOCIATED WITH PM-10 EMISSION CONTROL TECHNIQUES AT THE SMALL MODEL PLANT	4-17
TABLE 4-12.	ENERGY REQUIREMENTS ASSOCIATED WITH PM-10 EMISSION CONTROL TECHNIQUES AT THE MEDIUM MODEL PLANT	4-18
TABLE 4-13.	ENERGY REQUIREMENTS ASSOCIATED WITH PM-10 EMISSION CONTROL TECHNIQUES AT THE LARGE MODEL PLANT	4-19
TABLE 5-1.	CAPITAL COST FACTORS FOR PARTICULATE MATTER (PM-10) EMISSION CONTROL DEVICES . .	5-4
TABLE 5-2.	ANNUAL COST ELEMENTS AND FACTORS	5-6
TABLE 5-3.	ESTIMATED LABOR HOURS PER SHIFT AND AVERAGE EQUIPMENT LIFE	5-8
TABLE 5-4.	MODEL PLANT OPERATING DATA FOR VENEER DRYERS	5-14
TABLE 5-5.	CAPITAL COST OF EMISSION CONTROL ALTERNATIVES FOR VENEER DRYER PM-10 EMISSION CONTROL	5-15
TABLE 5-6.	ANNUAL OPERATING COST OF EMISSION CONTROL ALTERNATIVES FOR VENEER DRYER PM-10 EMISSION CONTROL	5-16
TABLE 5-7.	COST EFFECTIVENESS OF EMISSION CONTROL ALTERNATIVES FOR VENEER DRYER PM-10 EMISSION CONTROL	5-17
TABLE 5-8.	MODEL PLANT OPERATING DATA FOR BOILERS . .	5-20
TABLE 5-9.	CAPITAL COST OF EMISSION CONTROL ALTERNATIVES FOR WOOD WASTE-FIRED BOILER PM-10 EMISSION CONTROL	5-21

LIST OF TABLES (continued)

		Page
TABLE 5-10.	ANNUAL OPERATING COST OF EMISSION CONTROL ALTERNATIVES FOR WOOD WASTE-FIRED BOILER PM-10 EMISSION CONTROL	5-22
TABLE 5-11.	COST EFFECTIVENESS OF EMISSION CONTROL ALTERNATIVES FOR WOOD WASTE-FIRED BOILER PM-10 EMISSION CONTROL	5-23
TABLE 5-12.	COST EFFECTIVENESS OF A MULTICLONE FOR WOOD WASTE-FIRED BOILER PM-10 EMISSION CONTROL AT MODEL PLANTS	5-26

1.0 INTRODUCTION

The Clean Air Act Amendments of 1990 (promulgated November 15, 1990) authorize the U. S. Environmental Protection Agency (EPA) to designate areas that violate the National Ambient Air Quality Standards (NAAQS) for particulate matter 10 microns or smaller in diameter (PM-10) as nonattainment areas (see Section 107(d) of the Clean Air Act). Section 188(a) of the Act provides that every area designated nonattainment for PM-10 shall be classified as a "moderate" nonattainment area at the time of designation by operation of law. A moderate area can subsequently be reclassified as "serious" if EPA determines that (1) the area cannot practicably attain the PM-10 NAAQS by the applicable attainment date or (2) the attainment date has already passed and the area has failed to attain the standards.

State implementation plans (SIP's) for moderate nonattainment areas must, among other things, provide for the implementation of all reasonably available control measures, including reasonably available control technology (RACT), to achieve emission reductions from existing stationary sources (see Sections 172(c) and 189(a)(1)(C) of the Act). In addition to the requirements for moderate areas, SIP's for serious areas must include, among other things, provisions to ensure that the best available control measures for controlling PM-10, including "the application of best available control technology (BACT) to existing stationary sources" [H.R. Rep. No. 490, 101st Congress 2d Sess. 267 (1990)], are implemented no later than 4 years after the areas are reclassified as serious (Section 189(b)(1)(B)).

In accordance with Section 190 of the Act, EPA has determined that information for use in determining RACT and BACT is~~was~~ needed for the wood products industry. Therefore, EPA prepared this guideline document on alternative control techniques (ACT) to assist States in identifying RACT and BACT alternatives for significant process sources of PM-10 in the industry. Although ACT documents review existing information and data concerning the technology and cost of various control techniques to reduce emissions, they are, of necessity, general in nature and do not fully account for unique variations within a stationary source category. Consequently, the purpose of ACT documents is to provide State and local air pollution control agencies with an initial information base for proceeding with their own analyses of RACT and BACT for specific new and existing stationary sources.

2.0 SOURCES AND POLLUTANT EMISSIONS

This chapter gives an overview of the plywood and veneer industry, including geographic distributions, production trends, and the major subdivisions within the industry. The chapter contains process descriptions for producing veneer and subsequent manufacture of plywood from the veneer.[1]

Section 2.1 provides a description of the plywood industry. Section 2.2 describes the process operations in the manufacture of plywood. Sources of PM-10 are identified in Section 2.3. Model plants and corresponding emission estimates are developed in Section 2.4. Finally, Section 2.5 lists the references cited in this chapter.

2.1 INDUSTRY DESCRIPTION

This section provides a description of the plywood industry. Typical uses of plywood are also described.

Figure 2-1 clarifies the relationship of the various types of wood panel products by providing a graphic representation of the Standard Industrial Classification (SIC) code hierarchy. Panels constructed from wood veneers are classified as plywood.

Figure 2-2 depicts trends in U.S. plywood consumption and production from the 1950's to 1987.[2] The trends indicate that total plywood production and consumption have risen fairly consistently since 1950, with softwood plywood production and consumption mirroring the whole industry rise. Hardwood plywood production and consumption, however, has remained relatively flat.

Tables 2-1 and 2-2 summarize statistics describing the production of softwood and hardwood plywood, respectively.[3] In 1987, the leading States in production of softwood veneer and

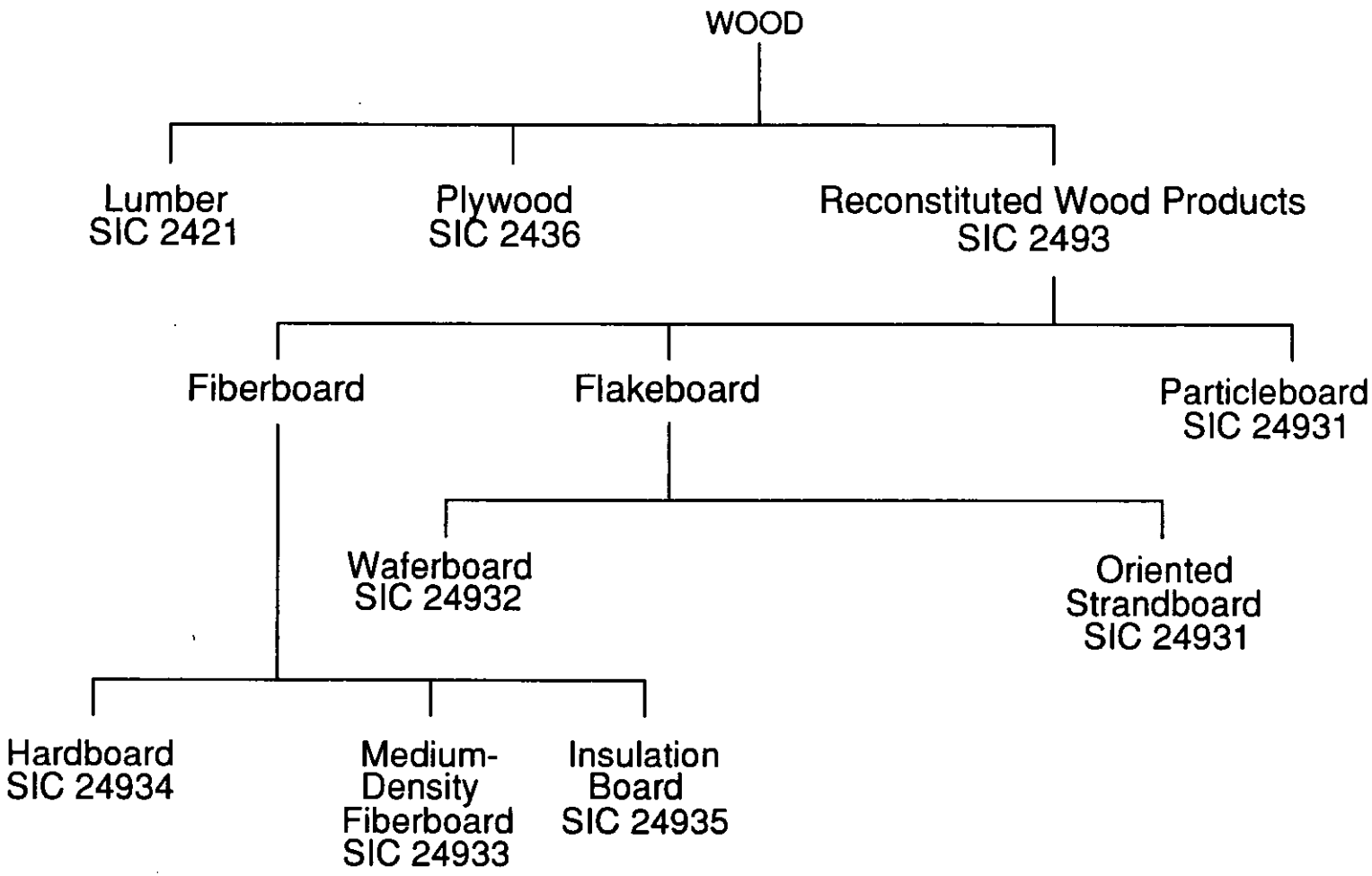

Figure 2-1. Segments of the wood products industry by Standard Industrial Classification Code.

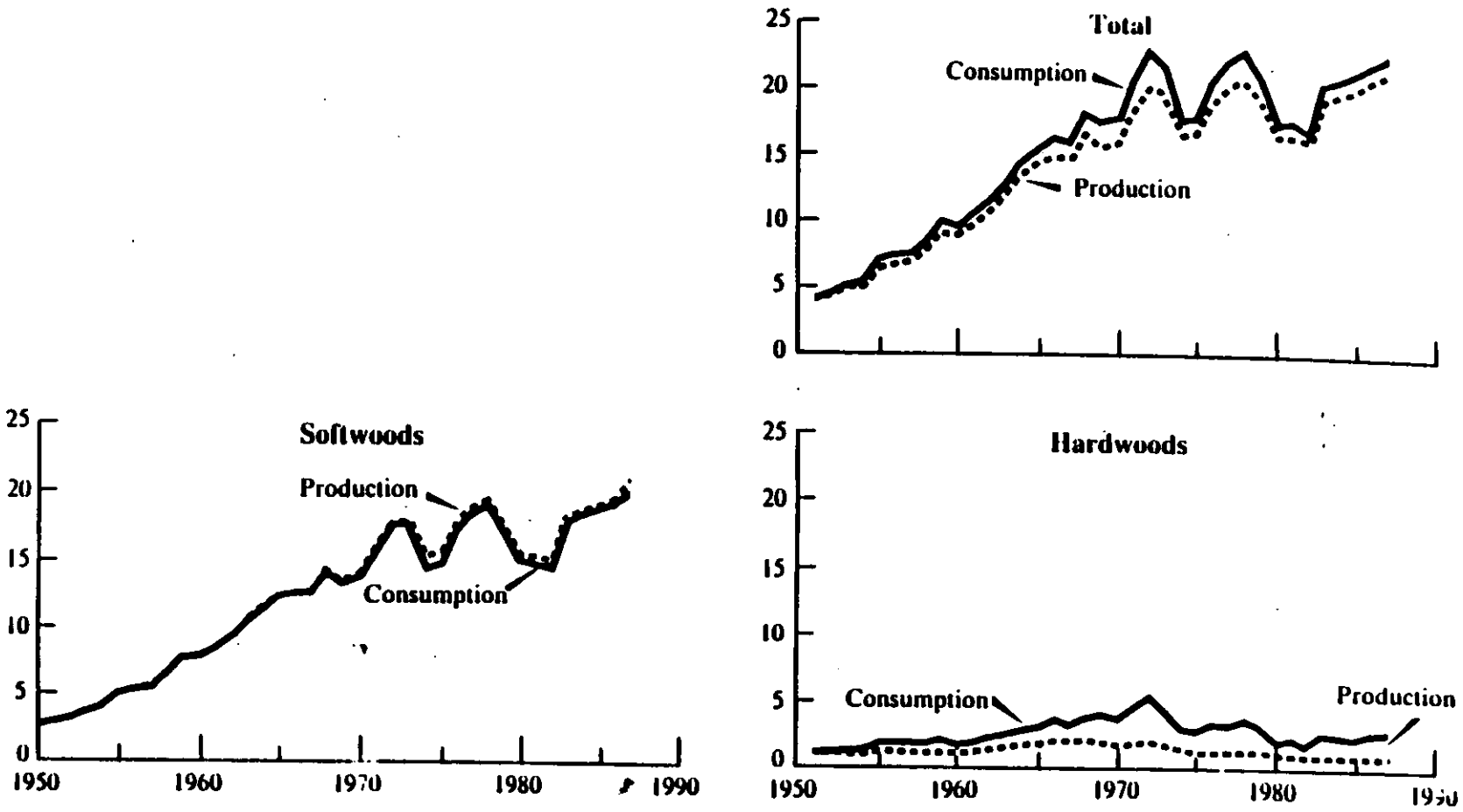

Figure 2-2. Plywood consumption and production.[2]

plywood production were Oregon, Washington, Louisiana, and Texas. For hardwood veneer, the leading States were North Carolina, Indiana, Wisconsin, and Virginia.

The following paragraphs describe the plywood industry including the different types of wood used and the uses of plywood.

Plywood is a panel product of wood veneers (plies) glued together so that the grain direction of some veneers runs at right angles and others run parallel to the long axis of the panel. Wood veneer is a thin layer of wood of uniform thickness produced by cutting or peeling sheets of wood from a log or block of wood. In most types of plywood, the grain of every other layer is at right angles to the previous layer. The predominant source of roundwood for producing plywood is conifer trees or softwoods. Deciduous trees are the source of hardwood veneers, used as laminates, and for hardwood plywood.

Softwood plywood is used principally as a construction material. Thick low-grade veneers are used extensively for construction plywood. Construction plywood is manufactured both in unsanded grades, which are applied mainly as sheathing and subflooring, and in sanded grades, which are suited for a wide variety of uses both decorative and structural.

Hardwood veneer is used to manufacture plywood for paneling, industrial parts, furniture, and as a construction material. Hardwood veneer is also used as a separate laminant in doors, tables, and case goods.

The softwood plywood industry originally developed on the West Coast and was concentrated there because of the quantities of available high-quality timber. However, developments in resin technology and manufacturing equipment in the early 1960's made it possible to produce softwood plywood from relatively small southern pine logs. The softwood plywood industry has grown rapidly in the South, and production from that region has exceeded production from the West Coast since 1980. About 15 percent of the softwood timber volume consumed for industrial products goes for plywood production.[1]

TABLE 2-1. SOFTWOOD VENEER AND PLYWOOD (1987 PRODUCTION)

SIC code	Product	No. of plants	No. of plants with shipments ≥$100,000	Product shipments	
				million ft^2	$ million
2436	Softwood veneer and plywood (total)	231	NA	NA	4,395
24363	Softwood plywood-type products	NA	NA	NA	148
24364	Softwood veneer, not reinforced or backed	NA	59	6,926	NA
24365	Softwood plywood, rough	NA	48	15,551	2,295
24366	Softwood plywood, sanded	NA	36	3,929	759
24367	Softwood, plywood specialties	NA	26	2,684	568
24360	Softwood veneer and plywood, n.s.k.	NA	NA		86

Source: Reference 3.
n.s.k. = not specified by kind.
NA = No data available.

TABLE 2-2. HARDWOOD VENEER AND PLYWOOD (1987 PRODUCTION)

SIC code	Product	No. of plants	No. of plants with shipments ≥$100,000	Product shipments	
				million ft^2	$ million
2435	Hardwood veneer and plywood (total)	310	NA	NA	1,832
24351	Hardwood plywood products	53	69 [sic]	1,113	759
24352	Prefinished hardwood plywood made from purchased plywood	17	16	1,471	313
24354	Hardwood veneer, not reinforced on back	91	>159 [sic]	4,113	421
24350	Hardwood veneer and plywood, n.s.k.	NA	NA	NA	104

Source: Reference 3.
n.s.k. = Not specified by kind.
NA = Not available.

The hardwood plywood industry is concentrated in the South. This industry is very diverse -- from small firms that produce custom-ordered plywood for specific architectural applications to large, high-capacity plants producing thin panels in production lines similar to those in the softwood industry. Almost all important hardwood species grown in the United States are used to some extent for hardwood plywood manufacture.

In 1987, plywood and veneer production in the U.S. amounted to 1,560 million cubic feet ($MMft^3$), consisting of 1,490 $MMft^3$ of softwood and 70 $MMft^3$ of hardwood.[2] Thus, hardwood plywood and veneer production represents only 4.5 percent of total plywood production on a volume basis. As indicated in Tables 2-1 and 2-2, in 1987, a total of 231 plants produced $4.395 billion worth of softwood veneer and plywood, while a larger number of hardwood plants (310) produced $1.832 billion worth of hardwood plywood and veneer.[3]

Softwood plant sizes vary widely from very small to very large (from less than 20 million, up to 750 million square feet [$MMft^2$]/yr, 3/8-inch [in.] basis), with veneer plants tending to be larger than medium-sized plywood plants. The variation in plant capacity is even greater for hardwood plants, where plants tend to be smaller on average than softwood plants. On a volume basis, hardwood veneer output is only 4.5 percent of the total veneer production; on a weight basis, about 5.2 percent. The production capacities reported by hardwood plywood and veneer plants are highly variable. Based on data from 33 plants, the range in production is from 1 million to 2,880 million ft^2/yr. on a 1/4-in. basis.[4]

2.2 PROCESS DESCRIPTION

This section presents a brief overview of the manufacturing and auxiliary processes involved in producing veneer and plywood. Each step of the processes is subsequently described in greater detail. Processes described in this section include debarking and heating the blocks (logs cut to required length); cutting, slicing, and clipping veneer; veneer drying; layup and glue spreading; hot pressing; and trimming and sanding. Auxiliary

processes include material storage and handling, heat generation, and waste disposal.

Most veneer for plywood is produced by peeling a continuous, thin layer of wood from a log as it is rotated. The large sheets of wood produced are then cut to size, dried, layered with the directions of the grain alternating, glued, and hot pressed. To reduce the tendency to warp, an uneven number of veneers is used (three, five, seven, etc.). ~~These~~Various plywood constructions are illustrated in Figure 2-3. Some plywood, however, is produced with an even number of veneers, the prime example being softwood plywood made up of four or six plies (veneers). In this case, two veneers are laid with grain parallel to form a thick center core. These types of panels are also illustrated in Figure 2-3.

Plywood is also produced with lumber or particleboard as the core. Nonveneer-core plywoods are commonly used in the furniture industry. Several plants produce the three-ply composite panel shown in Figure 2-3. This type of wood panel, with a particleboard core, is used for the same purposes as construction grades of softwood plywood.[1]

High-quality wood veneers are generally used in furniture and door manufacture as an overlay on cores of particleboard or medium-density fiberboard (wood composition boards). Core-type hardwood plywood consists of the hardwood veneer over a particleboard or fiberboard substrate. Most of the volume of the material is composition board, not hardwood plywood. Veneers are applied to the substrate by conventional hot- or cold-pressing.[5]

The major steps in the manufacture of plywood consist of the following:

1. Wood preparation: debarking and heating the blocks;
2. Cutting, slicing and clipping veneer;
3. Veneer drying;
4. Gluing and pressing; and
5. Finishing.

These steps and several auxiliary processes are described in the following subsections.

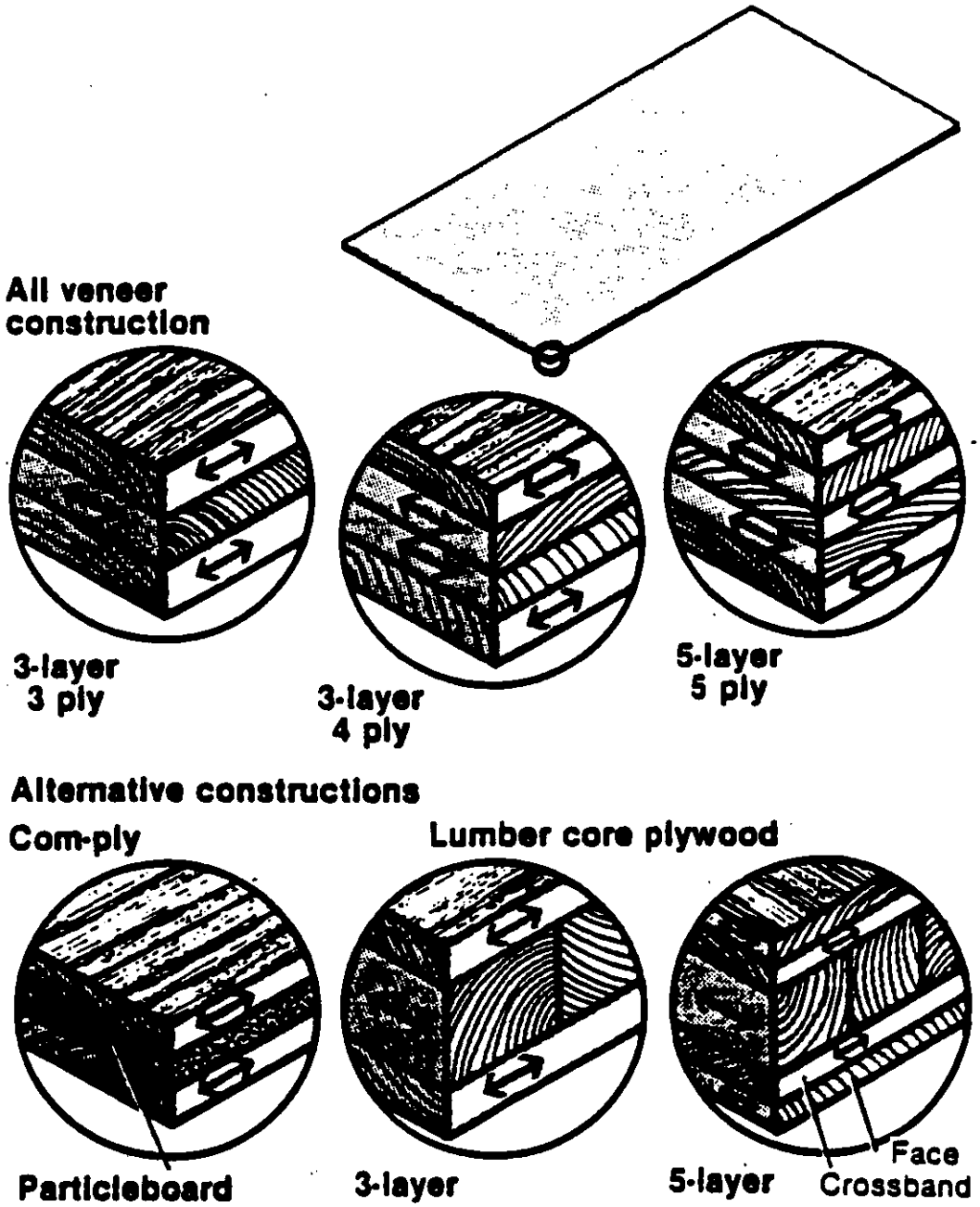

Figure 2-3. Various types of plywood construction.[1]

2.2.1 Wood Preparation

2.2.1.1 Debarking.[6] Debarking is the removal of bark from a log. Several types of debarkers are used, depending on the size of the mill, the size and type of log, and the production rate. The most common debarker in medium to large mills is the ring debarker. In this device, the log passes through a rotating ring that holds a number of pressure bars against the log that tear off the bark.

For lower production rates, or where crooked or stubby logs must be debarked, a rossing head type of debarker is used. The rossing head is a rotating cutterhead that rides along the log and cuts off the bark as the log is rotated.

Hydraulic debarkers are used for large, old-growth logs with thick, heavy bark. With this device, bark is blasted loose with jets of high-pressure water directed against the log surface. Use of this type of debarker is diminishing because of the expensive water treatment needed to meet environmental regulations.

2.2.1.2 Heating the Blocks.[61] Logs cut to the length required for rotary veneer cutting are called blocks. Almost all hardwood and many softwood blocks are heated prior to cutting the veneer. Heating softens the wood and knots, making it easier to cut. Heating also improves surface quality, reducing roughness.

A variety of methods are used to heat the logs. Steaming, soaking in hot water, spraying with hot water, or combinations of these methods are all suitable for some situations. Dense hardwoods are usually heated by hot water soaking at temperatures up to ~~93°C (200°F)~~200°F. Regardless of the heating medium, the objective is to heat the log to a suitable temperature as deeply into the log as veneer will be cut.

2.2.1.3 Cutting, Slicing, and Clipping Veneer.[61] Two major methods for producing veneer are peeling (rotary cutting) and slicing. The veneer ribbon is then clipped to usable widths.

Most veneer is produced by peeling, which is accomplished on a veneer lathe. Slicing is used for producing decorative veneers from high-quality hardwood and is seldom used with softwoods.

The cutting action on a lathe and on a slicer are similar and are illustrated in Figure 2-4. In either case, the wood is forced under a pressure bar that slightly compresses the wood as it hits the cutting edge of the knife.

On the veneer slicer, the wood is rigidly clamped to a carriage that oscillates, cutting on the down stroke. In a rotary lathe, the logs move forward continuously as the block rotates. The horizontal gap between the pressure bar and the knife is set slightly less than the thickness of the veneer to be cut to provide the necessary compression to reduce checking (splitting along the grain) of the veneer as it is severed from the log. After the cutting action has taken place and the veneer has moved past the pressure bar, the thickness of the veneer springs back as the compression is released.

One of the keys to high-speed production in modern mills is an automated means to load the lathe. Equipment of this type can load the lathe, peel the veneer down to the core, and discharge the core in about 10 seconds.

The green veneer is handled gently and rapidly as it comes from the lathe. The veneer is peeled at a rate of from 300 to 800 linear feet/minute (ft/min). A series of trays is used in many softwood plywood plants to handle these long ribbons of wood. Trays are often about 120 ft long, which is long enough to handle the veneer that comes from a typical 15-in. block. In hardwood mills, the green veneer is often wound into a roll and then moved to the clippers. Other hardwood mills use directly-coupled conveyors between the lathe and the clipper. This is possible when the clipper speed is as fast as the output from the lathe.

Clippers are high-speed knives that chop the veneer ribbons to usable widths. In hardwood veneer mills, clipping may be done manually to obtain the maximum amount of clear (unblemished) material. In softwood mills and in some hardwood mills, clipping is often done automatically at speeds of up to 1,500 lineal ft/min. The clipper cuts the veneer to about 54 in. wide (the panel width plus an allowance for shrinkage and panel trimming)

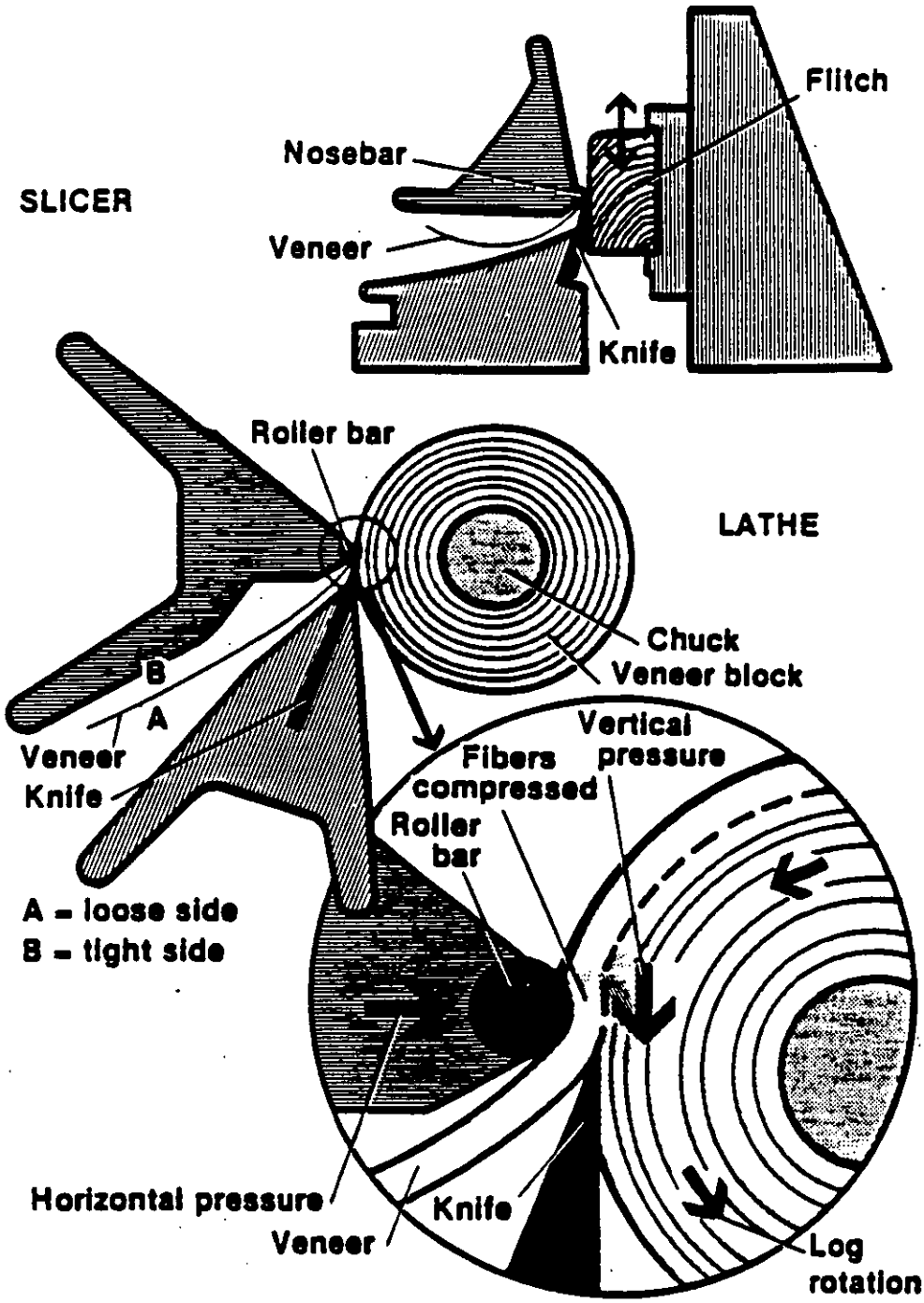

Figure 2-4. Two means of cutting veneer.[1]

if possible. However, if defects are present, the veneer may be clipped to less than full panel width.

2.2.1.4 Veneer Drying. Veneer dryers consist of a means of conveying the veneer through a heated chamber where temperatures range from ~~150° to 260°C (302° to 500°F)~~302° to 500°F. In older roller dryers, air circulates through a longitudinal zone parallel to veneer movement. This type of dryer is still in wide use for hardwood veneer. Most plants built in recent years, however, use jet dryers. These are also called impingement dryers since a curtain of air at velocities of 2,000 to 4,000 ft/min is directed through small tubes against the surface of the veneer. The high velocity produces turbulent air on the surface of the veneer. This eliminates the laminar boundary layer of moist air that acts as an insulator and increases heat and moisture transfer as compared with dryers using low-velocity air circulation. Figure 2-5 illustrates the principle of the jet impingement dryer.[~~6,71~~,7]

Developments such as the use of microwave energy, the use of high temperature preheaters, and increased drying temperatures ~~(up to 427°C [800°F])~~up to 800°F may find use for some types of veneer drying. In most softwood veneers, however, temperatures over about 400°F have adverse effects on glueability.[~~6,71~~]

Veneer dryers may be heated indirectly with steam, generated by a separate boiler, which is circulated through internal coils in contact with dryer air. They may also be heated directly by the combustion gases of a gas- or wood-fired burner. The gas-fired burner is located inside the dryer, whereas combustion gases from a wood-fired burner are mixed with recirculating dryer air in a blend box outside the dryer and then transported into the dryer. Most of the new dryers installed are direct-fired or steam-heated jet dryers. Jet dryers use higher temperatures than do the older longitudinal dryers.[~~6,78~~]

2.2.2 Gluing and Pressing[~~61~~]

2.2.2.1 Layup and Glue Spreading. Almost all adhesives used in the plywood industry in the United States are thermosetting (i.e., becoming permanently rigid when cured by

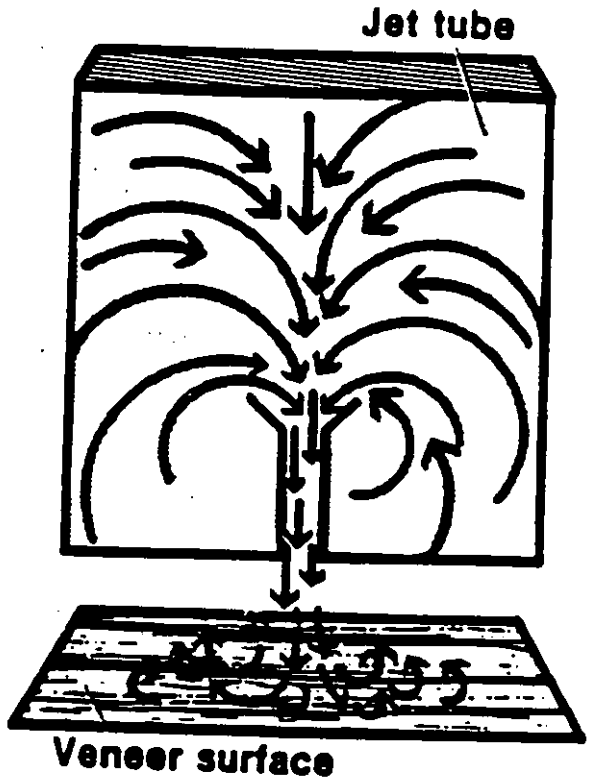

Figure 2-5. Principle of the jet (impingement) dryer.[1]

heat) synthetic resins. The two most important types of resins used are phenol-formaldehyde, which is used for interior and exterior grades of softwood plywood and for exterior grades of hardwood plywood, and urea-formaldehyde, which is used to manufacture interior grades of hardwood plywood.

A recent development is the introduction of resins that can be applied to "wet" veneers with moisture contents of 15 percent or higher. (Normal phenolic mixes generally are recommended for veneers at less than 10 percent moisture content). The major advantage of the wet-veneer adhesive is that it allows increased production through the veneer dryer, which is often the process that limits the production volume in a plant.

The processes of applying adhesives to the veneers, assembling and gluing veneers into a panel, and moving the panels in and out of the press are often the most labor-intensive steps in plywood manufacture. Veneer is highly variable in width, length, and quality, which makes it a difficult material to handle with automated systems. Yet major advances have been made to increase automation in this stage of manufacture.

2.2.2.2 Hot Pressing.[61] Most softwood plywood plants prepress the loads of laid-up panels prior to final pressing in the hot press. Prepressing is done in a cold press at lower pressure. The purpose is to allow the wet adhesive to "tack" the veneers together allowing easier loading of the hot-press and helping prevent the veneers from shifting during loading.

Hot pressing of the panels is usually done in multiopening presses. Such presses can produce 20 to 40 four- by eight-foot panels at each pressing cycle, which may take 2 to 7 minutes. The purpose of the press is twofold: (1) to bring the veneers into close contact so that the glue layer is very thin, and (2) to heat the resin to the temperature required for the glue to polymerize. Adhesives made from phenol-formaldehyde resins are used for exterior and all southern pine plywood. These resins typically require temperatures of ~~115°C (240°F)~~240°F in the innermost glue layer for approximately 90 seconds to cure properly. Resin systems must be carefully tailored to the

specific conditions in a plant. Press time and temperature can also be modified (e.g., a shorter press time may be possible if press temperature is increased).

One of the goals in designing the pressing process is to use enough pressure to bring the veneer surfaces together without overcompressing the wood. The better the job the lathe does in cutting the veneer (i.e., the smoother and more uniform the thickness), the less pressure is required. Some mills decrease the pressure during the press cycle to reduce unnecessary compression of the plywood. The finished plywood must meet industry thickness standards; therefore, if it is overcompressed during pressing, the thickness of the veneer must be increased to compensate. This reduces the yield from the blocks. Pressing pressures typically used in the industry vary from 110 pounds per square inch (psi) for low-density woods to over 200 psi for dense species.

2.2.3 Finishing[6]

Stationary circular saws trim up to 1 in. from each side of the pressed plywood, producing even-edged sheets. About 20 percent of annual plywood production is sanded. Some plants do no sanding; some plants sand all of their production. Sanding depth varies with product type. Those that are sanded may be sanded on both sides or only one. Sheets move through enclosed automatic sanders while pneumatic collectors above and below the plywood continuously remove the sanderdust. Sawdust in trimming operations is also removed by pneumatic collectors.

2.2.4 Heat Generation[6]

~~Energy needs for plant heating (in winter) and producing steam to heat the press platens and the veneer dryers are met almost entirely by using process wood residues as fuel. Boilers are generally heated with larger sized wood residues prepared by hogging (grinding into smaller particles) bark and board trim. Bark wood mixtures are common boiler fuels at plywood plants.~~

2.2.4 Auxiliary Processes[6,9]

2.2.4.1 Heat Generation[9]

Energy needs for plant heating (in winter) and producing steam to heat the press platens and the veneer dryers are met almost entirely by using process wood residues as fuel. Boilers are generally heated with larger-sized wood residues prepared by hogging (grinding into smaller particles) bark and board trim. Bark-wood mixtures are common boiler fuels at plywood plants.

2.2.4.2 Material Storage and Handling. Sawdust, sanderdust, and hogged trim (waste trimmed materials that are ground into smaller particles for fuel) are the major PM stored and handled in plywood manufacture. Information specific to plywood plant handling of these materials was not found other than that the sanderdust emissions are well controlled and that all are burned as fuel. Storage piles are probably enclosed.

2.2.4.3 Waste Disposal. Bark, trim, and other large wood residues may be hogged for use as fuel. Sanderdust and sawdust are also used as fuel for boilers or for direct-fired combustion units.[8,10] Cores from the veneer lathe are sawed into boards.

2.3 PM-10 SOURCE DESCRIPTION

The major PM-10 sources in the plywood industry are wood waste fuel burning for heat generation (common to any industry burning wood residues), and the veneer dryers. There is no reliable estimated emission factor published for plywood sanding, but estimates made in this report show that it is not a major source of PM-10, even if uncontrolled. Minor sources of PM-10 emissions are materials handling, waste disposal, storage piles, and roadways.

Table 2-3 summarizes published literature and test information on PM emissions from plywood manufacturing plants.[9-18] The PM-10 estimates, in most cases, are based on assumptions and on data from similar particleboard operations.

All calculations for this report required conversion of volume to weight measurements. Specific gravity was assumed to be 0.51 (31.8 lb/ft^3).[13]

TABLE 2-3. ESTIMATED TSP AND PM-10 EMISSION FACTORS FOR PLYWOOD MANUFACTURING PLANTS[a]

Source	TSP emission factor, lb/ton[b]	Estimated PM-10 emission factor, lb/ton[b]	Comments
Log debarking	0.024	0	~~References 9, 10, 11.~~Reference 11.
Bucking and log handling	neg.	0	~~References 9, 10, 11.~~N/A
Log sawing	0.35	neg.	References ~~9, 10,11,12.~~11 and 12.
Sawdust handling (pile loading, unloading and storage)	1	~~<0.001ne~~ g.	This emission rate is for TSP.[9] ~~Sawdust at plywood plants is assumed to be similar in characteristic to particleboard sanderdust. PM-10 emission factor is derived based on the estimate that PM-10 is 0.1% of~~ particleboard sanderdust.[13] Reference 11. Mick and McCargar estimate that PM-10 constitutes 0.1% of particleboard sanderdust.[13] Sawdust at plywood plants is assumed to be similar to particleboard sanderdust.
Veneer cutting	~~ND~~N/A	neg.	Log is cut wet.
Veneer drying	2.2	≤2.1	References 14, 15.
Hot pressing	N/A	N/A	N/A
Sanding Uncontrolled Cyclone (99% eff.) Fabric filter	 201~~.1~~ 2.01 0.02	 0.2 0.2 0.002	Reference 9 estimates 0.1 lb TSP/ft^2 of finished product. Based on a plywood specific gravity of 0.51 and a thickness of 3/8 inches, this translates to 201~~.1~~ lb TSP/ton of finished product. Assuming that 0.1% of this TSP is PM-10, the uncontrolled PM-10 emission factor is 0.2 lb/ton of finished product.[13] Based on a TSP control efficiency of 99% for the primary cyclone, the TSP emission factor at the outlet of the cyclone is 2.01 lb TSP/ton.[16] Since no control is assumed for PM-10, the PM-10 emission factor at the cyclone outlet is 0.2 lb/ton.
Baghouse outlets on pneumatic collectors Total: Hogged fuel Hogged trim Dry fuel collector	 ~~.0770~~. 08 ~~0.0490~~. 05 ~~0.00950~~ 01 ~~0.0180~~. 02	 ~~0.0770~~. 08 ~~0.0490~~. 05 ~~0.00950~~ 01 ~~0.0180~~. 2	Reference 17.
Fugitive road dust	0.17	0.087	Reference 17.
Wood waste burner (factors expressed as lb/ton of fuel burned) Uncontrolled Multiclone	 7.2 6.0	 6.48 5.46	Reference 18.

TSP = total suspended particulates.
~~N/A = Not applicable.~~
[a]Softwood density 0.51 or 0.99 lb/sq ft; 3/8-in. basis.
[b]Emission factors given as lb/ton dry furnish or plywood panel except for wood-waste burners, for which the factor is pounds emission per ton of dry fuel burned. ~~These emission factors are taken from the references cited and are reported as found in the references.~~

2.3.1 Veneer Cutting

Veneer cutting is performed within enclosed buildings. Further, the logs are wet when they are cut. Therefore, there is no potential for PM-10 to be emitted during veneer cutting.

2.3.2 Veneer Drying

Organic aerosols and gaseous organic compounds, along with a small amount of wood fiber are found in the emissions from veneer dryers. A mixture of organic compounds is driven from the green wood veneer as its water content is converted to steam in the drying process. Aerosols begin to form as the gaseous emissions are cooled below about ~~150°C (302°F)~~302°F, although a large fraction of the emissions remain in the vapor state at ~~21°C (70°F)~~70°F. The vapor at ~~21°C~~70°F is largely monoterpenes (10-carbon species) such as α-pinene. Most of the aerosol fraction at ~~21°C~~70°F comprises resin acids (such as abietic acid), fatty acids, and neutral sesqui and di-terpene compounds. All of the aerosol compounds have at least 15 carbon atoms per molecule.[19] These aerosols form visible emissions called blue haze.

Douglas fir and ponderosa pine are the western species producing the greatest opacity under any given drying condition. Softwoods with a lower resin content provide less of a problem. Drying temperatures over ~~204°C (400°F)~~400°F produce the greatest emission problems.

Uncontrolled total solid particulate (TSP) emission factors from reviews of test data including data compiled by the National Council of the Paper Industry for Air and Stream Improvement (NCASI) were pooled to derive a PM emission factor of 2.2 lb/ton of finished product (FP).[14,15] Measurements of 15 to 95 percent of the TSP as condensible organics were reported. For the model plant calculations, the PM-10 emission factor used is ≤ 2.1 lb/ton FP (95 percent of 2.2 lb/ton), since condensable organics may be assumed to be 100 percent PM-10.

2.3.3 Gluing

The gluing operation is performed by passing veneer through rollers. No PM-10 emission data are available. Further, since no spraying is involved, no PM emissions are expected.

2.3.4 Hot Pressing

Any PM emitted from the press would consist of condensible organics. However, no PM emission data are available for the veneer pressing operation.

2.3.5 Sanding

A PM emission factor of 0.1 lb/ft^2 has been reported in AP-42 for sanding operations.[119] Based on a product thickness of 0.375 in. (3/8 in.) and a specific gravity of 0.51, this translates to 201~~.1~~ lb/ton of finished product. Mick and McCargar (1969) have reported that PM-10 content in sanderdust generated at particleboard plants is 0.1 percent.[13] Assuming the sanderdust at plywood plants have the same characteristics as particleboard sanderdust, the PM-10 emission factor is estimated to be 0.2 lb/ton of finished product. Mick and McCargar (1969) have also indicated that many Oregon firms were installing well-engineered cyclone systems for primary collection with fabric filters for final collection in the late 1960's.[13] Based on a 99 percent PM-10 control efficiency, the PM-10 emission factor at the outlet of the fabric filter is estimated to be 0.002 lb/ton of finished product.

2.3.6 Heat Generation

As explained in Section 2.2.4, most of the wood residues generated are burned to heat the dryer or to fire the boiler to produce steam to heat the press platens. A PM-10 emission factor was not estimated directly for the wood waste burners, because it is common practice to run the exhaust from the burner directly into the dryers to heat the furnish. The fraction of PM-10 in the wood fly ash is reported to be about 90 percent.[18] For the purposes of this report, the AP-42 multiclone emission factor of 5.46 lb/ton of wood and bark burned for boilers (with flyash reinjection) was used.[18]

2.3.7 Auxiliary Processes

2.3.7.1 Materials Handling and Storage. Several plywood manufacturing and auxiliary processes may generate some fine PM with an unknown fraction of PM-10. For this report it was assumed that 0.1 weight percent of the total PM would be PM-10.

This assumption is based on the measurement of the fraction of PM-10 in particleboard sanderdust.[13] Most of the materials handing processes are at least partially enclosed; truck loading and dumping may be exceptions. Like sanderdust, small particles (e.g., hogged fuel) are collected and transported by pneumatic conveyers. Information was not available, other than for sanderdust, for the degree of control the pneumatic collectors require. The PM-collecting cyclones may be further controlled by high-efficiency cyclones or baghouses, but other plywood manufacturing processes that require such a degree of control were not identified. Sawdust storage and conveying, ~~board sawing,~~ and wood residue hogging, processes common to both particleboard and plywood industries, are not always controlled by baghouses at plywood plants. When uncontrolled emission factors for many of these plywood plant processes were not available, it was assumed that pneumatic collector baghouse outlet data from an OSB plant would be representative of plywood plants.

2.3.7.2 Waste Disposal. Waste generated at plywood facilities consists primarily of sanderdust. This waste is burned as a fuel in the dryer or boiler.

2.3.8 Additional Sources of PM-10

2.3.8.1 Storage Piles. Most storage of sawdust, sanderdust, and hogged trim and other wood residues used for fuel is in at least partially enclosed facilities. No storage pile emission data specific to plywood plants were found.

2.3.8.2 Roadways. Because plywood manufacturing plants may have unsurfaced roads and parking areas, this is a potential source of PM-10 emissions. Emission factors and estimating methods for this source are described in other documents and will not be included in this document.[20]

2.4 MODEL PLANTS AND BASELINE EMISSIONS

This section describes typical plant sizes, equipment, and operating parameters used to develop model plants. The PM-10 emissions from the model plants were estimated on an hourly basis for individual processes and on an annual basis for all sources. Emission factors were selected from Table 2-3. Uncontrolled

emission factors were not available for many processes. Where high-efficiency cyclones or baghouses are already routine control measures, an uncontrolled emission factor was not used for estimating model plant emissions.

This section describes operating parameters and PM-10 emission estimates for model plants representing plywood and veneer plants that use steam-heated jet veneer dryers for drying. The model plant operating parameters are based on data collected from the softwood plywood industry published literature or are based on engineering estimates. Data were not available for deriving emission factors for the hardwood portion of the industry (about 5 percent of the total plywood and veneer production by weight). In addition, because of their lower natural resin content, hardwoods produce lower dryer emissions.

2.4.1 Sizing Basis

Selection of the production capacity of small, medium, and large plants was based on plant descriptions from the 1990 Directory of the Forest Products Industry.[4] The average density of softwood plywood is reported as 31.8 lb/ft^3 (sp.gr. = 0.51), and the capacities are reported or converted to a 3/8-in. basis.[13] All values used were on an oven-dry (OD) basis. Three model plant annual board production capacities of 50, 150, and 300 $MMft^2$ were selected to represent the small, medium, and large plants, respectively. These plant sizes cover the range of 20 million to 750 million ft^2 annual capacity previously noted for the existing softwood plywood plants. The corresponding tons of board produced were calculated as follows:

$$1{,}000\ ft^2 \quad 3/8\text{-in. thick is } 31.251\ ft^3$$

$$MM\ ft^2 \quad 3/8\text{-in. thick is } 31{,}251\ ft^3$$

$$31{,}251\ ft^3/MM\ ft^2 \times 31.8\ lb/ft^3 = \frac{994{,}000\ lb/MM\ ft^2}{2{,}000\ lb/ton} = 497\ tons/MM\ ft^2$$

Thus 50, 150, and 300 $MMft^2$ correspond to 24,800, 74,600, and 149,000 tons OD board, respectively. Operating parameters developed for the three model plants are presented in Table 2-4.

TABLE 2-4. SOFTWOOD PLYWOOD MODEL PLANTS OPERATING PARAMETERS

	Small	Medium	Large
Annual operating time, hours	8,400	8,400	8,400
Production, MM ft^2/yr	50	150	300
Production, tons/yr	24,800	74,300	149,000
Amount through dryer,[a] MM ft^2/yr	60	180	360
Jet dryers, number	1	3	5
Sanders Wide-belt panel sanders, number	1	1	2[b]
Wood residue burned, tons/hr	3.42	11.3	22.5
Wood residue, production, tons/hr[c]	3.75	11.3	22.5

Source: Reference ~~2021~~.

[a]Assumes 10 percent reject, 10 percent redry. Expect less emissions from partially dried panels.

[b]If 36 MM ft^2 of plywood sanded requires 2,000 hr, sanding 100 percent of output requires two sanders (Reference ~~2021~~).

[c]Pingrey (1976) estimates that 1.27 tons of residue is produced per ton of plywood in Oregon (Reference ~~2122~~). The wood residue production rates at the model plants are calculated using this estimate.

2.4.2 Airflow Rates

Table 2-5 contains a summary of the air flowrates from all point sources at the model plywood plants.

2.4.3 Baseline Emissions

Table 2-6 lists PM-10 emission rates for the model plants, based on the model plant parameters given in Table 2-4, and the emission factors in Table 2-3.

No emissions estimate is given for processes without available or estimable emission factors. For several processes, emission factors for comparable processes at particleboard or OSB plants were used in the absence of data for plywood plants.[17]

Based on the emission factors, emission rates, and the given model plant parameters, the major emission streams are from wood waste fuel burning for heat generation, and from the veneer dryers.

TABLE 2-5. SUMMARY OF AIRFLOWS FROM POINT SOURCES AT MODEL PLYWOOD PLANTS

Model plant size	Dryers, acfm @ 230°F[a]	Boiler, acfm @ 450°F[b]	Sanding fabric filter, acfm[c]	Dry fuel fabric filter, acfm[c]	Hogged fuel fabric filter, acfm[c]
Small	14,220	15,270	55,000	6,000	12,000
Medium	42,660	50,460	55,000	12,000	24,000
Large	85,315	100,470	110,000	24,000	48,000

[a]Air flows for dryers are reported for all dryers combined and are based on data provided in RTI (1983) (Reference ~~20~~21).
[b]Air flows for boilers are estimated based on the fuel firing rates given in Table 2-4 and flow rate data in EPA's Nonfossil Fuel Fired Industrial Bilers - Background Information (Reference 23).
[c]Air flows for sanding, dry fuel, and hogged fuel fabric filters are assumed to be same as those at particle board plants and were derived based on data given in Reference 17.

TABLE 2-6. MODEL SOFTWOOD PLYWOOD AND VENEER PLANT PM-10 EMISSIONS, LB/HR
(3/8-inch basis; specific gravity = 0.51)

PM-10 sources	Emission factor, OD lb/ton DF	Small plywood (or medium veneer) 50 MM ft^2/yr; 24,800 ton/yr; 2.95 tons/hr (3.42 tons fuel/hr)	Medium plywood (or large veneer) 150 MM ft^2/yr; 74,600 tons/yr; 8.88 tons/hr (11.3 tons fuel/hr)	Large plywood 300 MM ft^2/yr; 149,000 tons/yr; 17.7 tons/hr (22.5 tons fuel/hr)
~~Green-end processes:log debarking, bucking and log handling, log sawing~~	~~Negligible~~			
~~Veneer cutting~~	~~Negligible~~			
Veneer drying	2.1	6.2	19	37
Boiler (wood-bark fuel as fired) multiclone	5.46[a]	19	62	123
~~Hot pressing~~	~~N/A~~	~~N/A~~	~~N/A~~	~~N/A~~
~~Sanding (100% 0.025 in.) baghouse~~	~~0.002~~	~~0.006~~	~~0.03~~	~~0.04~~
Baghouse outlets on other pneumatic collectors	~~0.0770~~.08	~~0.230~~.2	0.7	1.4
~~Fugitive sources~~		~~0.0003~~	~~0.0009~~	~~0.02~~
~~Materials handling~~	~~Negligible~~			
~~Sawdust handling~~	~~<0.001~~			
~~Storage piles~~	~~N/A~~			
Total		26	82	162

OD = oven dry; DF = dry furnish; N/A = not available.

[a]Boiler PM-10 emission rate is expressed as lb/ton fuel burned.

2.5 REFERENCES FOR ~~SECTION~~CHAPTER 2

1. Haygreen, J.G., and J. L. Bowyer. Forest Products and Wood Science: An Introduction, 2nd Edition. Ames, IA, Iowa State University Press. 1989. ~~500 P.~~pp. 332-360

2. Ulrich, A. H. U.S. Timber Production, Trade, Consumption, and Process Statistics, 1950-87. Miscellaneous Publication. U.S. Department of Agriculture, Forest Service. Washington, D.C. December 1989. 77 p.

3. Bureau of the Census, U.S. Department of Commerce. 1987 Census of Manufacturers. Industry Series. Millwork, Plywood, Structural Wood Members, Not Elsewhere Classified, Industries 2431, 2434, 2435, 2436, and 2439. Washington D.C.. U.S. Government Printing Office. 1990.

4. Mendoza, E.B. (ed.) 1990 DFPI Directory of the Forest Products Industries. San Francisco, Miller Freeman Publications, Inc. 1989.

5. Maloney, T.M. Modern Particleboard and Dry-Process Fiberboard Manufacturing. San Francisco, Miller Freeman Publications, Inc. 1977. ~~672 p.~~p. 609.

~~6. Midwest Research Institute. Wood Products Industry Characterization. Draft Report. Prepared for U. S. Environmental Protection Agency. Research Triangle Park, NC. July 15, 1991. Chapter 3.~~

6. Reference 1, pp. 307-310.

7. Reference 1, pp. 188-189.

~~7~~8. Control Techniques for Organic Emissions from Plywood Veneer Dryers. Research Triangle Institute. Research Triangle Park, NC. March 1983. p. 2-14.

9. Reference 1, pp. 423-444.

~~8~~10. Reference 8, p. 5-4.

~~9~~11. Compilation of Air Pollutant Emission Factors, Volume I: Stationary Point and Area Sources (AP-42), Fourth Edition. U.S. Environmental Protection Agency. Research Triangle Park, NC. September 1985. p. 10.3-3.

~~10. PEDCo Environmental, Inc. Assessment of Fugitive Particulate Emission Factors for Industrial Processes. Prepared for U.S. Environmental Protection Agency. Research Triangle Park, NC. Publication No. EPA 450/3-78-107. September 1978.~~

~~11. PEDCo Environmental, Inc. Uncontrolled fugitive emission factors for log debarking, sawing, and sawdust handling. In: Technical Guidance for Control of Industrial Process Fugitive Particulate Emissions. Office of Air and Waste Management, Office of Air Quality Planning and Standards, U.S. Environmental Protection Agency. Research Triangle Park, NC. Publication No. EPA 450/3 77 010. March 1977. pp. 2 332 - 2 340.~~

12. Danielson, J.A. (ed.) Air Pollution Engineering Manual (AP-40), Second Edition. U.S. Environmental Protection Agency, Research Triangle Park, NC. May 1973, pp. 372-374.

13. Mick, A., and D. McCargar. Air Pollution Problems in Plywood, Particleboard, and Hardboard Mills in the Mid-Willamette Valley. Salem, OR. Mid-Willamette Valley Air Pollution Authority. March 24, 1969. 26 p.

14. Reference ~~78~~, p. 6-12.

15. NCASI. A Study of Organic Compound Emissions from Veneer Dryers and Means of Their Control. NCASI Technical Bulletin No. 405. August 1983.

16. Reference ~~78~~, p. 6-28.

17. Interpoll Laboratories, Inc. Potential to Emit Review of Existing Oriented Strand Board Plant in Bemidji, MN. Prepared for Potlatch Corporation, Circle Pines, MN. 1988.

18. Reference ~~911~~, p. 1.6-1 - 1.6-10.

19. Reference ~~78~~, p. 2-19.

20. Reference ~~911~~, Chapter 11.

21. Reference ~~78~~, Chapter 4.

22. Pingrey, D. W. Forest Products Energy Overview. In: Energy and the Wood Products Industry, Proceedings No. P-76-14, The Forest Products Research Society. Madison, WI. 1976.

23. Nonfossil Fuel Fired Industrial Boilers - Background Information. Draft EIS. U.S. Environmental Protection Agency. Research Triangle Park, NC. Publication No. EPA-650/3-82-007. March 1982. ~~P. 8-8 8-10.~~P. 8-8 - 8-10.

3.0 EMISSION CONTROL TECHNIQUES

This chapter contains descriptions and data for various emission control techniques used for controlling emissions of particulate matter less than 10 μm in diameter (PM-10) at plywood plants. Included are control methods for emissions from process areas described in Chapter 2 and other fugitive area sources, such as storage piles.

Table 3-1 contains a summary of technically demonstrated or potential control techniques (and ranges of control efficiencies) used to control PM-10 emissions resulting from various operations at plywood plants.

The emission control techniques described are considered to be representative of controls applied to PM-10 sources at plywood plants. Process control or pollution prevention techniques are also included. This chapter focuses on retrofit control techniques, where a retrofit is considered to be the replacement of, or addition to, existing equipment. The discussion of each control technique addresses design parameters and variables affecting operation and performance.

The following sections describe the PM-10 emission control techniques applicable to the various PM-10 emission sources ~~described~~ discussed in Chapter 2. The PM-10 emission control techniques for veneer dryers, boilers, sanding and trimming operations, and nonprocess fugitive sources are described in Sections 3.1 through 3.4, respectively. ~~Section 3.5 contains a summary of PM-10 emission controls that are applicable at plywood plants.~~ Finally, Section 3.~~6~~5 lists the references used in this chapter.

TABLE 3-1. SUMMARY OF PM-10 CONTROL TECHNIQUES APPLICABLE AT PLYWOOD PLANTS

Source	PM-10 control techniques	PM-10 control efficiency, %	
		Range	Average
Veneer dryer[a]	Electrified filter bed	80-90[b]	85[b]
	Ionizing wet scrubber	57-84[b]	80[b]
	Plate-type wet electrostatic precipitator	NA	90[a]
	Tube-type wet electrostatic precipitator	NA	80[a]
Wood waste-fired boiler	Dry electrostatic precipitator	>99[c]	99[c]
	Electrified filter bed	>95[d]	95[d]
	Venturi scrubber	>99[e]	99[e]
	Fabric filter	>99[c]	99[c]
	Tube-type wet electrostatic precipitator	98[f]	98[f]
Sanding and trimming	Fabric filter	>99	99
Storage waste piles[fg]	Enclosures	N/A	N/A
	Wet suppression systems	N/A	N/A
	Chemical stabilization	N/A	N/A

NA = Not available

N/A = Not applicable

[a]Electrified filter beds, ionizing wet scrubbers, and tube-type ESP's have been used to control PM emissions from veneer dryers. However, test data pertaining to PM control efficiencies are very limited or unavailable. Plate-type ESP's have not been used to control PM emissions from veneer dryers. Average PM-10 removal efficiencies for plate- and tube-type wet ESP's of 90 and 80 percent, respectively, have been assumed in this analysis. These average PM-10 removal efficiencies have been measured for dryers used at particleboard/waferboard/oriented strandboard (OSB) facilities.

[b]Data supplied by the vendor claims that the PM-10 control efficiency for an electrified fitter bed (EFB) ranges between 80 and 90 percent.[1] An average PM-10 control efficiency of 85 percent has been assumed in this analysis. For the ionizing wet scrubber, a pilot unit demonstrated 57 to 84 percent removal of PM and condensible organic emissions as measured by ODEQ Method 7.[2]

~~[b]The average PM-10 control efficiencies reported are based on either manufacturer's data or engineering judgment based on test results on oriented strandboard (OSB).~~

[c]Control efficiencies of 99 percent and above have been reported for fossil fuel-fired boilers such as coal-fired boilers for fabric filters and dry ESP's.

[d]Manufacturer's data indicate that a PM-10 control efficiency of 95 percent can be achieved.[3] No exclusive test data for PM-10 are available.

[e]Venturi scrubbers can be designed for 99 percent PM-10 control efficiencies by allowing for large pressure drops.

[f]During a test carried out at an OSB manufacturing facility, it was observed that a tube-type wet ESP reduced PM emissions by 98 percent.[4] No data are available pertaining to PM-10 removal efficiency.

[g]All control techniques to control fugitive PM-10 are considered to be good engineering practices. Data pertaining to control efficiencies are not available.

3.1 CONTROL TECHNIQUES FOR DRYER PM-10 EMISSIONS

This section presents a summary of the characteristics of the emission stream emitted by the veneer dryer and a description of the emission control technologies including pollution prevention techniques.

3.1.1 Emission Stream Characteristics

The PM emissions from plywood veneer dryers consist primarily of organic aerosols, with a small amount of wood fiber. The organic compounds evolve as a consequence of driving off the moisture as steam. These compounds remain gaseous until they cool to below approximately ~~150°C (~~300°F~~)~~, when they begin to form aerosols. These aerosols include resin acids (including abietic acids), fatty acids, and neutral sesqui- and di-terpene compounds, each of which has at least 15 carbon atoms. The relative quantities of each of these compounds vary with wood species, with measurement technique, and even from dryer to dryer.[145]

Condensible emissions from Douglas fir veneer averages approximately ~~4.4 g/m^2 of product, 9.5 mm thickness basis (~~0.9 lb/1,000 ft^2, 0.375-in. basis~~)~~. Southern pine condensible emissions are approximately ~~4.0 g/m^2, 9.5 mm basis (~~0.8 lb/1,000 ft^2, 0.375-in. basis~~)~~.[256]

3.1.2 Demonstrated Control Techniques

The most common technology for control of veneer dryer emissions is wet scrubbing, for which several types of equipment are available. In each case, a water spray is introduced into the dryer exhaust stream, resulting in cooling and condensing of organic material. Water vapor may condense onto the organic aerosol, and the resulting droplets are large enough to be removed by cyclonic collectors, filters, or mist eliminators. Representative examples of these collector types are described in the following subsections along with other more recent technologies.

Recent technologies that are more seriously (than scrubbing) considered by industry are based on applying an electric charge to the PM and subsequently collecting it on an oppositely-charged

surface. An electrified filter bed (EFB) is an example of this technology. Another example, a wet electrostatic precipitator (ESP) requires cooling of the gas stream to condense the pollutant from a vapor before a charge can be applied to the aerosol. Upon condensation, the droplets are electrostatically charged and collected onto a surface. Another device, an ionizing wet scrubber, uses scrubbing in combination with the application of an electric charge. These techniques are described in greater detail in the following subsections.

3.1.2.1 Multiple Spray Chambers. The most common wet scrubbing device used to control PM-10 emissions from veneer dryers employs three to five spray chambers in series. The five-chamber model contains a final demisting zone where a high-speed centrifugal fan removes droplets. The three-chamber model requires no fan and has an operating pressure drop of only 62 to 124 Pa (0.25 to 0.50 in. w.c.). This device is typically designed to treat the exhaust from a single steam-heated or gas-fired dryer and generally is installed above the dryer.[3~~2~~]

Pollutant removal efficiency. The three-zone unit is reported to meet Oregon's 10 percent opacity limit on dryer exhausts that have moisture contents of at least 24 percent by volume. The removal efficiency of such scrubbing devices for PM and condensible emissions generally is less than 50 percent. ~~From recent Oregon Department of Environmental Quality (ODEQ) Method 7 tests, ODEQ reports that this scrubber can limit PM and condensible emissions to 3.2 g/m^2, 9.5 mm basis (0.65 lb/1,000 ft^2, 0.375-in. basis), for Western woods.~~[3]

Current status. Conversations with State agencies and industry personnel have indicated that multiple spray chambers are fast becoming obsolete because newer technologies based on electrostatic precipitation are available that are far more efficient.[~~4,5~~7,8] Based on this fact, this technology is not evaluated further.

3.1.2.2 Combination Packed Tower and Cyclonic Collector. A combination packed tower and cyclonic collector consists of a spray section followed by a bank of 2 to 12 cyclones in parallel

and a packed spray tower. The packed tower may be equipped with fiber-pad mist eliminators. These devices have been installed to treat the exhausts of from one to three steam-heated or direct-fired veneer dryers. Because of their size, the units are installed outside of the buildings housing the dryers. Overall pressure drop across such a system is approximately 2,860 Pa (11.5 in. w.c.) without the mist eliminator and 4,850 Pa (19.5 in. w.c.) with the mist eliminator.[62]

Pollutant removal efficiency. Removal efficiencies for PM and condensible organic emissions have been measured through ODEQ Method 7 at up to 59 percent without the mist eliminator and up to 91 percent with the mist eliminator.[32] ~~The ODEQ reports that these units with mist eliminators can limit particulate and condensible emissions to 1.2 g/m^2 of product, 9.5 mm basis (0.25 lb/1,000 ft^2, 0.375 in. basis) for steam heated and gas-fired dryers; 1.6 g/m^2, 9.5-mm basis (0.35 lb/1,000 ft^2, 0.375 in. basis) for wood fired dryers with fuel moisture content less than 20 percent; and 1.8 g/m^2, 9.5 mm basis (0.40 lb/1,000 ft^2, 0.375 in. basis) for wood fired dryers with a fuel moisture content of 20 percent or greater.[3]~~

Current status. A vendor has indicated that this technology is soon becoming obsolete due to low control efficiencies.[69] The vendor indicated that other technologies based on electrostatic precipitation are fast replacing this technology. Based on these facts, this technology is not evaluated further.

3.1.2.3 Sand Filter Scrubber. The sand filter scrubber is a device incorporating a wet-scrubbing section followed by a wet-sand filter and mist eliminator. Existing systems typically treat the exhaust from two or more steam-heated dryers. The larger PM is removed in the scrubber, while a portion of the remaining organic material is collected in the filter bed or the mist eliminator. A water spray carries the condensed material through the filter bed to a separation system. The design pressure drop of the sand filter scrubber unit is approximately 4,500 kPa (18 in. w.c.).[32]

Pollutant removal efficiency. Test data indicate that up to 90 percent of PM and condensible organic material (as defined by ODEQ Method 7) may be removed by the sand filter scrubber system.[32]

Current status. Industry personnel have indicated that sand filter scrubbers are becoming obsolete due to low control efficiencies and high operating costs. One plywood manufacturing company reported that at one of its facilities in Oregon, it has replaced an existing sand air filter with an EFB, a technology based on electrostatic precipitation (see Section 3.1.2.5). Based on these facts, this technology is not evaluated further.[9,10]

3.1.2.4 Ionizing Wet Scrubber. An ionizing wet scrubber utilizes the principles of electrostatic particle charging, image force attraction, inertial impaction, and gas absorption to collect solid or liquid particulate matter. In an ionizing wet scrubber, the gas stream is subjected to high-voltage direct current and the particles are electrostatically charged. The gas stream then passes through a packed scrubber section, where the charged PM is removed by attraction to neutral surfaces. Packing material used is usually Tellerete®. The PM in the range of 3 to 5 microns (μm) may be collected primarily through inertial impaction. Smaller (electrostatically charged) particles are removed essentially by image force attraction to neutral surfaces. When a charged particle is sufficiently close to a neutral surface (surface with no charge), it induces an opposite charge at the surface of the neutral surface, thus resulting in an attraction between the two oppositely charged surfaces. Neutral surfaces include both packing material and liquid droplets. A schematic diagram of an ionizing wet scrubber is given in Figure 3-1. Figure 3-2 presents a sectional view of the particle charging section and the collection surfaces.[8] While the packed scrubber section contributes significantly to the removal of PM in this system, it also enables the removal of gaseous pollutants through diffusion and absorption.[10,11]

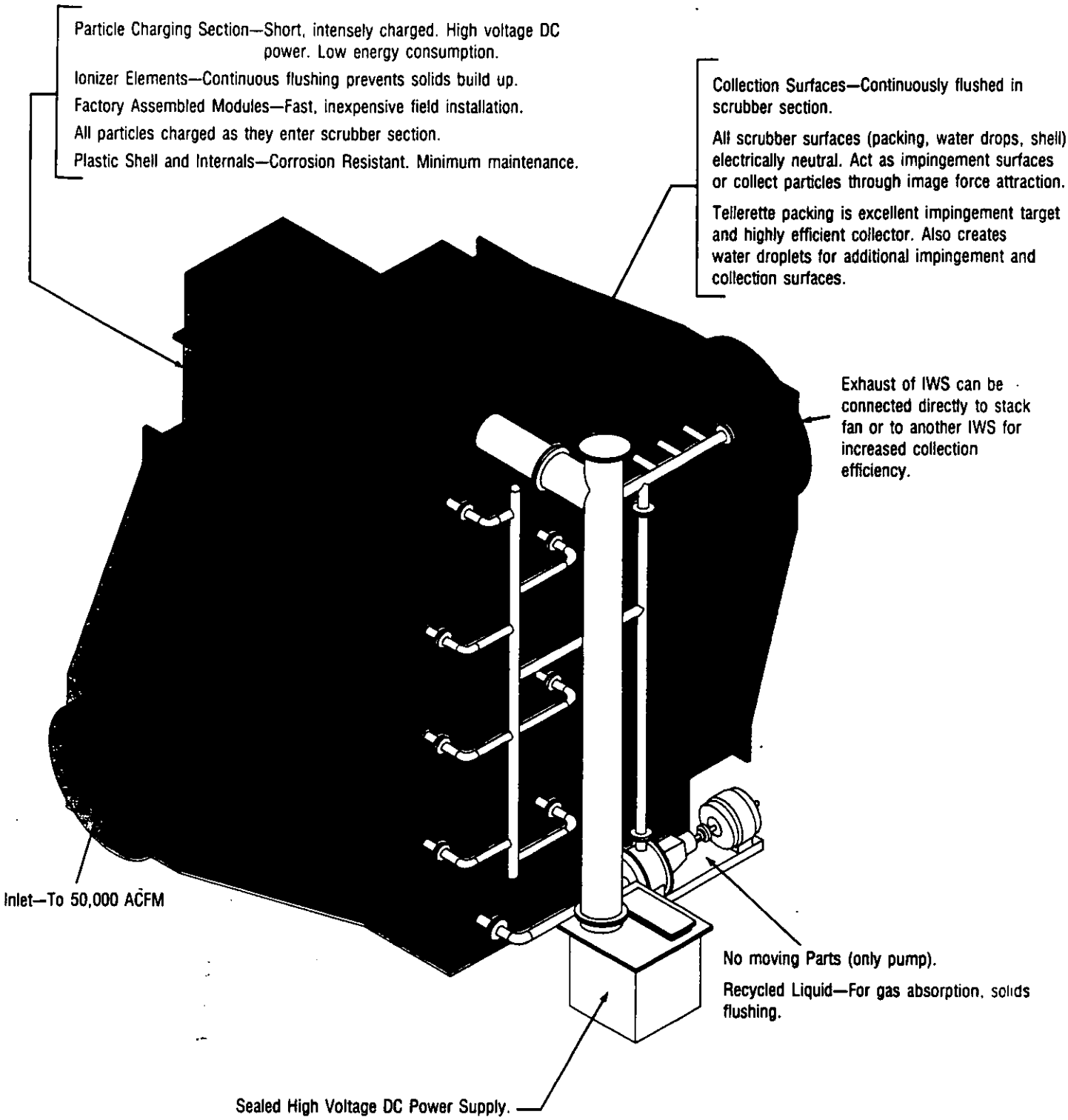

Figure 3-1. Schematic of an ionizing wet scrubber.[11]

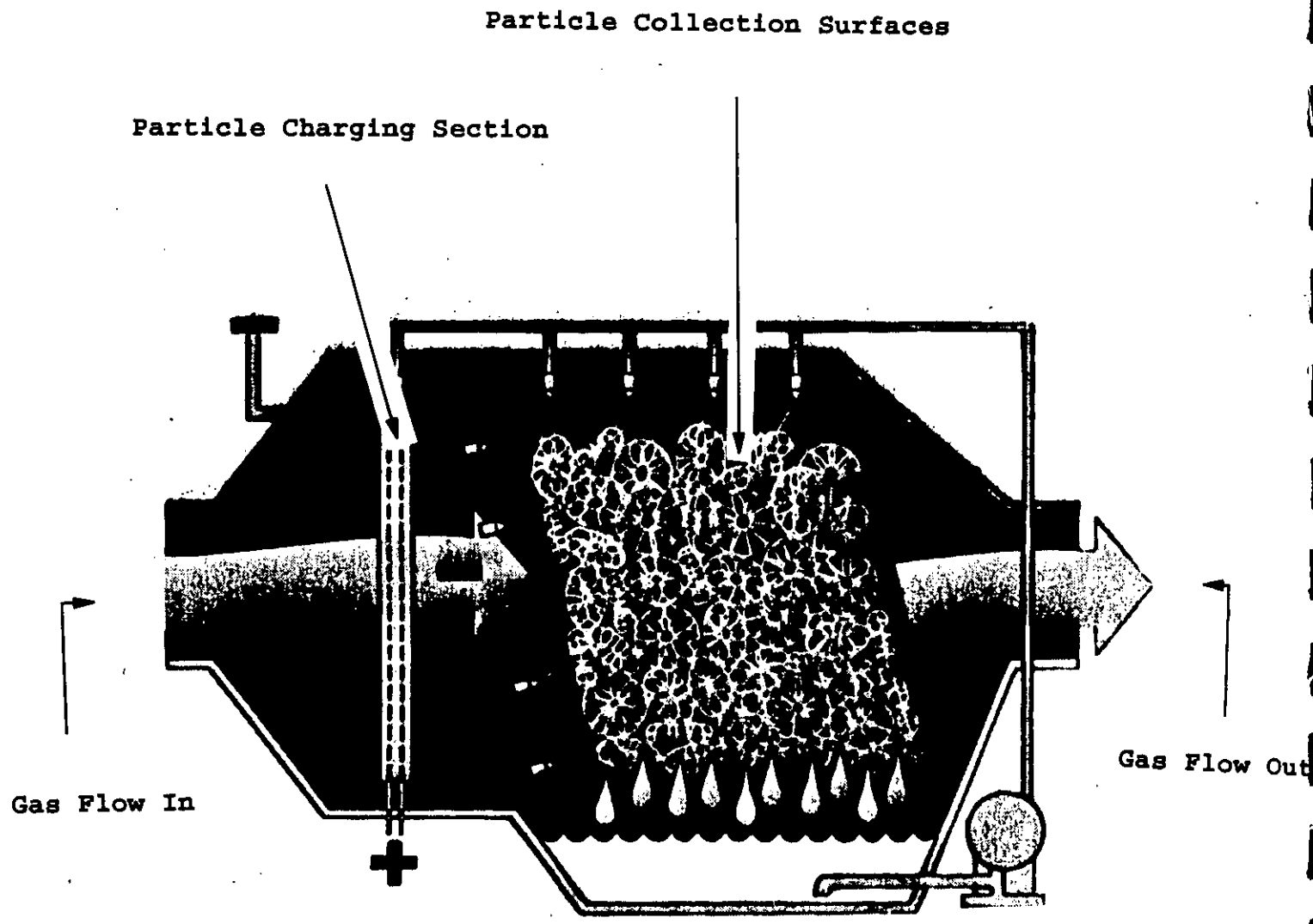

Figure 3-2. Schematic of the particle charging section and collection surfaces of an ionizing wet scrubber.[611]

Ionizing wet scrubbers are available in two configurations, single- and dual-stage units; the dual-stage units have two sets of collection plates placed in series. The manufacturer claims that PM removal efficiency of the second stage is equal to that of the first stage despite the reduction in PM loading into the second stage. An ionizing wet scrubber is reported to have low energy requirements. Pressure drop is reported to be between 124 Pa to 372 Pa (0.5 to 1.5 in. w.c.) through a single-stage system.[8~~11~~]

Pollutant removal efficiency. Although no emission data have been published showing removal efficiencies of full-scale units, a pilot unit demonstrated 57 to 84 percent removal of PM and condensible organic emissions as measured by ODEQ Method 7.[~~3~~2] ~~The ODEQ has summarized several tests of exhausts from full-scale units. Ionizing wet scrubber units can limit PM and condensible emissions to 0.47 g/m^2, 9.5-mm basis (0.0963 lb/1,000 ft^2, 0.375-in. basis) for steam-heated dryers; 1.04 g/m^2, 9.5 mm basis (0.212 lb/ 1,000 ft^2, 0.375 in. basis) for wood-fired dryers, and 0.2 g/m^2, 9.5-mm basis (0.041 lb/1,000 ft^2, 0.375 in. basis) for wood-fired dryers where heat is supplied by boiler exhaust.~~[9] For this analysis, a PM-10 control efficiency of 80 percent has been assumed.

3.1.2.5 Electrified Filter Bed. ~~In a typical EFB system, the fine dust particles in the exhaust gases are electrostatically charged in the corona formed by an ionizer, and are then deposited on an electrically polarized filter bed of pea gravel. Gravel dust mixture from the filter bed is conveyed into a pneumatic lift via the hopper located below the filter bed. Low pressure air conveys the gravel dust mixture to the top of the system. Dust is separated from the gravel during this vertical transportation process due to the severe agitation in the line. The dust and gravel are separated in the disengagement chamber. The clean gravel is reused in the filter, and the dust is collected in a silo for disposal. A general view of the system and the location of system components is given in Figure 3-3.~~[10]Electrified filter beds have been used to control PM

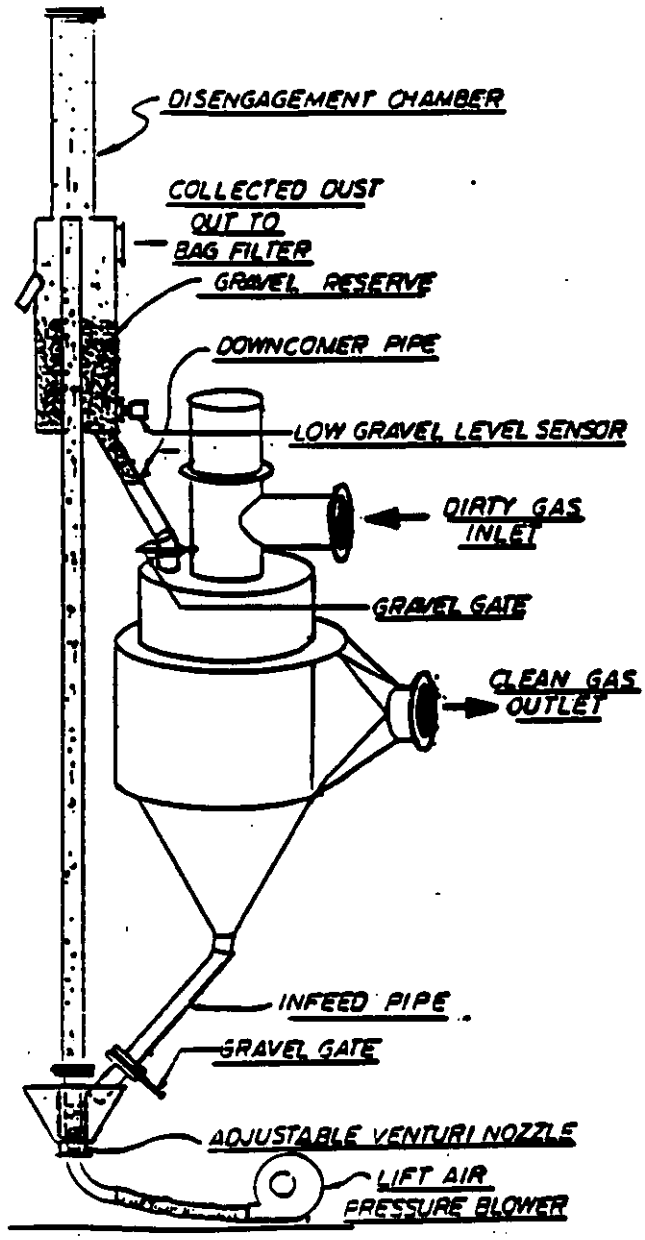

Figure 3-3. Schematic of a~~n dry~~ electrified filter bed.[~~10~~12]

from dryers at PB/WB/OSB facilities. In a typical dry EFB system, as used at PB/WB/OSB facilities, the fine dust particles in the exhaust gases are electrostatically charged in the corona formed by an ionizer, and are then deposited on an electrically polarized filter bed of pea gravel. Gravel-dust mixture from the filter bed is conveyed into a pneumatic lift via the hopper located below the filter bed. Low-pressure air conveys the gravel-dust mixture to the top of the system. Dust is separated from the gravel during this vertical transportation process due to the severe agitation in the line. The dust and gravel are separated in the disengagement chamber. The clean gravel is reused in the filter, and the dust is collected in a silo for disposal. A general view of the system components is given in Figure 3-3.[~~11~~12]

For veneer dryers EFB's are used with a modification. The exhaust gases from the veneer dryer are drawn into an evaporative cooler where recirculated condensate/overspray water is sprayed thus cooling the gases. If additional cooling is required, high pressure water sprays are used to achieve very fine droplet sizes. Typically, the gas stream is cooled to a temperature between 140 and 150°F. As a result of the cooling, volatile organics in the veneer dryer exhaust are condensed into submicron liquid particles. The cooled gases are then drawn into the electrostatic mist eliminator/ionizer where water droplets precipitate on the walls of the mist eliminator. The condensed water is drained back to the condensate tank. The condensed organic volatiles are given a negative electrostatic charge and are electrostatically deposited on the gravel as the gas stream passes through the gravel bed. Condensed organic material that remains as a liquid is drained into a holding basin. The organics cool further and solidify in the basin. The gravel is periodically removed from the filter and treated in a tumbling mill to separate wood resins that might have condensed on the gravel. Cleaned gravel is conveyed pneumatically to the top of the EFB for reuse. Figure 3-4 presents a schematic of the EFB with a precooler as used at plywood facilities.[1]

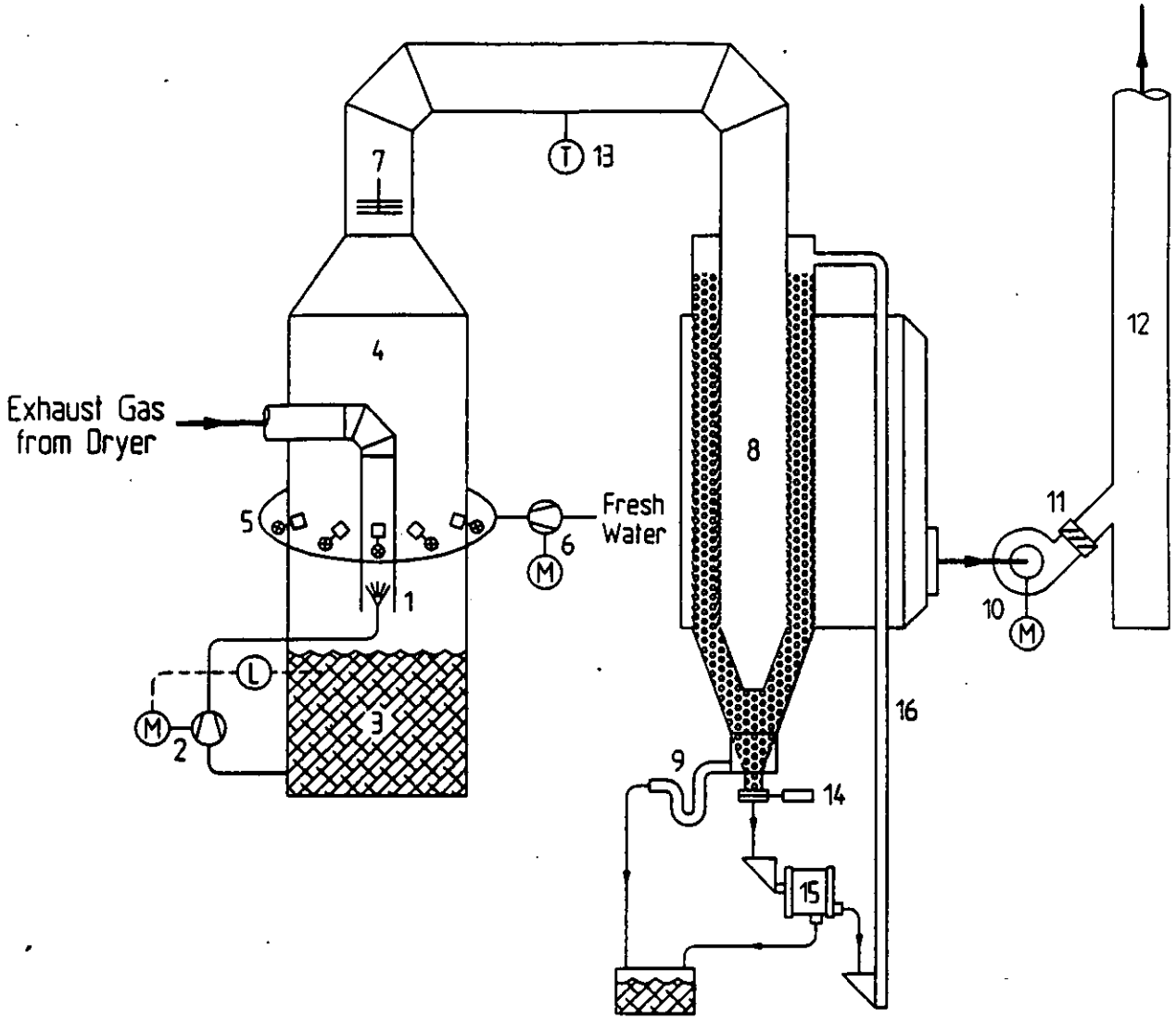

Flow Diagram
EGB Filter System
Plywood Veneer Dryer
Emission Control

1 Condensate Spray Nozzle
2 Recirculation Pump
3 Condensate/Overspray Tank
4 Evaporative Cooler
5 High Pressure Spray Nozzles
6 High Pressure Pump
7 Electrostatic Demister/Ionizer
8 EGB Filter
9 Pollutant Drain
10 I.D. Fan
11 Damper
12 Stack
13 Cooler Outlet Temperature
14 Dump Gate
15 Tumbling Mill
16 Pneumatic Transport

Figure 3-4. Schematic of an electrified bed modified for use at plywood facilities.[1]

Pollutant removal efficiency. Emissions data measured at the inlet and outlet of EFB's are ~~very limited~~not available. Most of the available test results only report the PM-10 emission level at the outlet of the control device. Vendor quotations have claimed a PM-10 removal efficiency of 80-90 percent.[~~11~~1] ~~Tests conducted by ODEQ have indicated that the use of an EFB for the control of PM resulting from nonresinous softwood based veneer dryers can limit the emissions to 0.332 g/m^2, 9.5 mm basis (0.068 lb/1,000 ft^2, 0.375 inch basis) for steam heated dryers, and 1.41 g/m^2, 9.5-mm basis (0.289 lb/1,000 ft^2, 0.375 in. basis) for natural gas-fired dryers.[9]~~ For this analysis, a PM-10 control efficiency of 80 percent has been assumed.

3.1.2.6 Wet Electrostatic Precipitator. An ESP is a PM control device that uses electrical forces to remove entrained particles from the gas stream and deposit them onto collector plates. Particle collection in an ESP involves three steps: the electrical charging of particles in the gas stream, the collection of the particles on the collection plates or electrodes, and the removal of the collected PM. Wet ESP's are used on effluent gas streams containing sticky, condensible hydrocarbon pollutants. ~~These devices have been used extensively in various industrial applications (e.g., aluminum pot lines, carbon anode baking furnaces, and wool fiberglass plants) to control PM.~~ Wet ESP's are in service to control veneer dryer effluent in plywood and other composite material industries.[12,13~~13~~]

Gases exiting the dryer enter a prequench to cool and condense (saturate) gases before they enter the precipitator. The amount of cooling required depends on the characteristics of the exhaust air stream exiting the dryer. Therefore, this cooling requirement is determined on a system-specific basis. The prequench is essentially a low-energy scrubber that sprays water into the incoming gas stream. The gas that exits the prequench is saturated (i.e., multicomponent hydrocarbons approach their vapor-liquid equilibrium), and, thus, further cooling in the precipitator will condense and capture more of the condensible

hydrocarbon, mainly the sticky resins. The wet ESP cannot collect by electrostatic removal any material that will not condense.[~~12,13~~13,14]

Two wet ESP designs are used in the wood products industry to remove PM from dryer effluents. One design uses traditional plate-type electrodes to collect the PM. The other uses a tube-type collector.

Plate-type wet ESP. Figure 3-~~4~~5 presents a diagram of a plate-type wet ESP.[~~14~~15] Electric fields are established by applying a wet direct-current voltage across a pair of electrodes, a discharge electrode, and a collection electrode. The PM and water droplets suspended in the gas stream are electrically charged by passing through the electric field around each discharge electrode (the negatively charged electrode). The negatively charged particles and droplets then migrate toward the positively charged collection electrodes. The PM is separated from the gas stream by retention on the collection electrode. Earlier designs of wet ESP's specified that water sprays be located above the electrodes to create a continuous film of water on the collector plates to wash the collected PM from the plates. The most recent installations have replaced this continuous spray system with an intermittent traveling header system equipped with multiple high-pressure spray nozzles. The high-pressure spray dislodges and removes any remaining organic PM buildup from the plates. Use of intermittent high-pressure sprays instead of continuous sprays results in decreased water consumption and reduced voltage degradation in the ESP.[~~12~~14]

~~Figure 3-5 presents the configuration of a recently developed discharge electrode and collection plate arrangement.~~[12]

The discharge electrode is a needle/plate-type discharge electrode. The collection plates are located on either side of the discharge electrode. This design is claimed to result in low power consumption and reduced insulator and control problems.[~~12~~14]

Discussions with industry representatives have indicated that the plate-type wet ESP is more commonly used to control

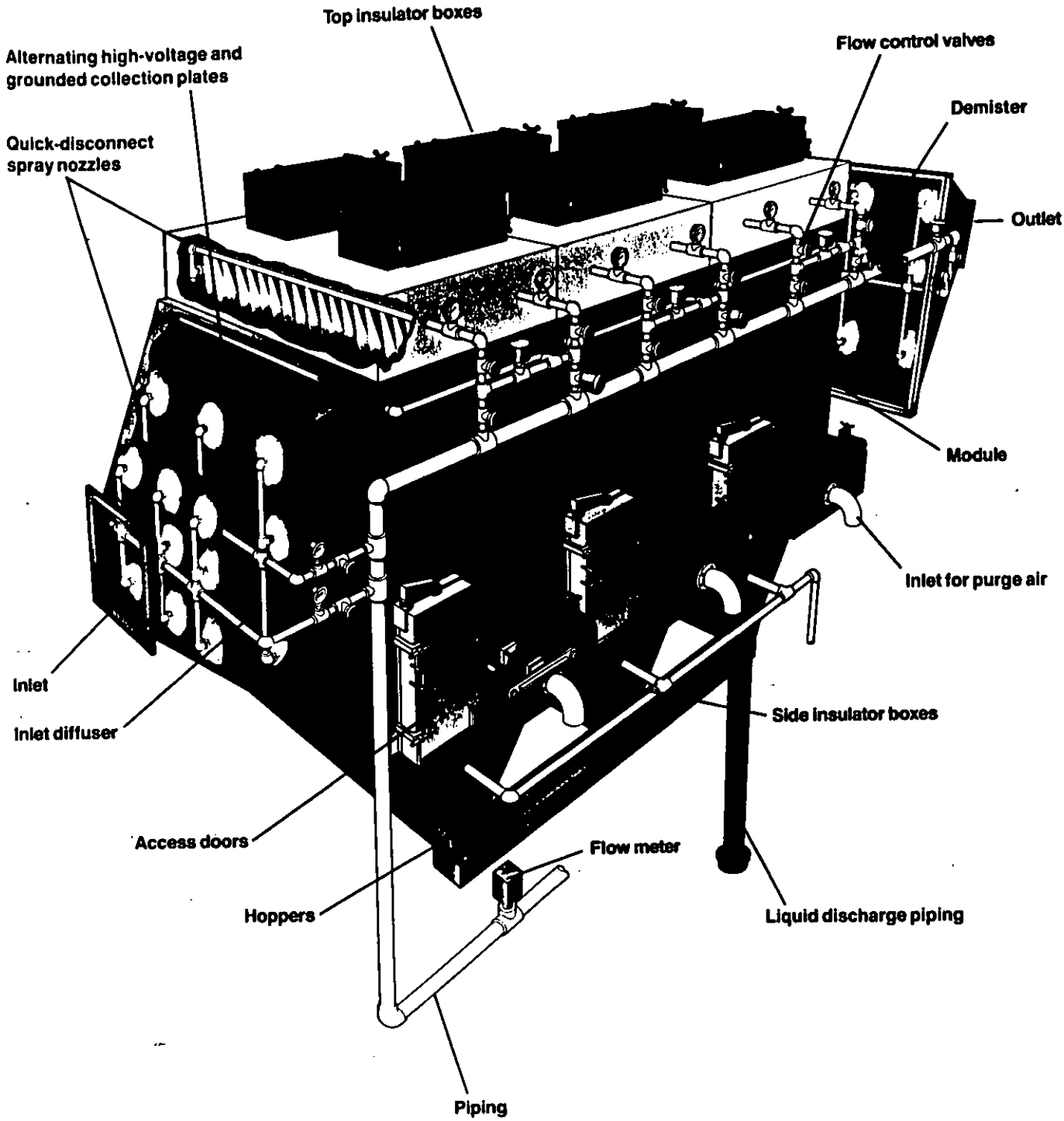

Figure 3-5. Schematic of a plate-type wet ESP.[15]

PM-10 emissions from oriented strandboard (OSB) manufacturing facilities. Currently this type of control device is not being used at any plywood manufacturing facility for controlling emissions from veneer dryers.[14,16] For this analysis, a PM-10 control efficiency of 80 percent has been assumed.

Tube-type wet ESP.[13] Figure 3-6 presents a diagram of a tube-type wet ESP. This system has been used for controlling blue haze emissions resulting from wood drying processes including veneer dryers and rotary dryers used in the manufacture of particleboard and OSB.

As a first step, the gaseous stream exiting the veneer dryer is conditioned with water sprays to achieve adiabatic saturation. This causes the hydrocarbon vapors to condense into droplet form. The conditioned gas then passes through a cyclone module located at the top of the ESP unit, where large particles including liquid droplets are removed. The cyclone essentially serves as a mist eliminator.[13]

The gaseous stream devoid of large particles enters the tubes, wherein they are subjected to a high-intensity electric field. The electrodes are in the form of discs placed along the axis of the tube. Figure 3-7 contains a schematic of the disk-in-tube arrangement found in a tube-type wet ESP. This geometry enables the charging field to be concentrated in the annular region between the disc and the collecting tube. The particles are thus charged by the high-intensity electric field, and as they travel farther, they are forced to the tube walls by the electrostatic field. The clean gaseous stream exits the tubes into a plenum located at the bottom of the unit and is discharged through two outlet ducts, one located on each side of the unit.[13]

The tube walls remain wet because fine mist entrained in the saturated gas are also collected on the tube surfaces. This water film flows down along the tube walls, resulting in a self-irrigating action that allows easy cleaning of the surface when flushed with additional water. Flushing is performed periodically (every 3 hours) at a rate of (150 to 200 gal/min)

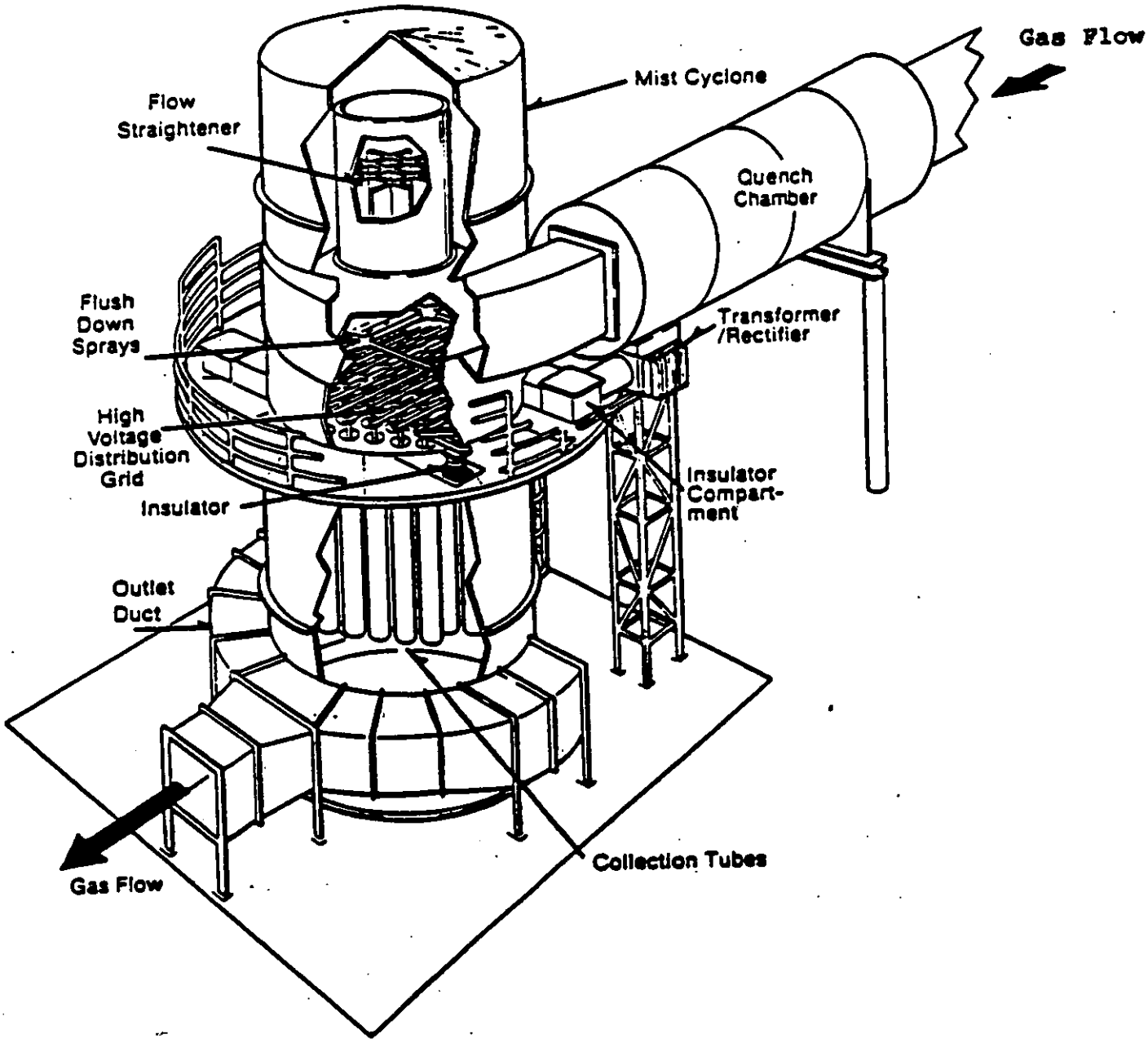

Figure 3-6. Schematic of the tube-type wet ESP.[13]

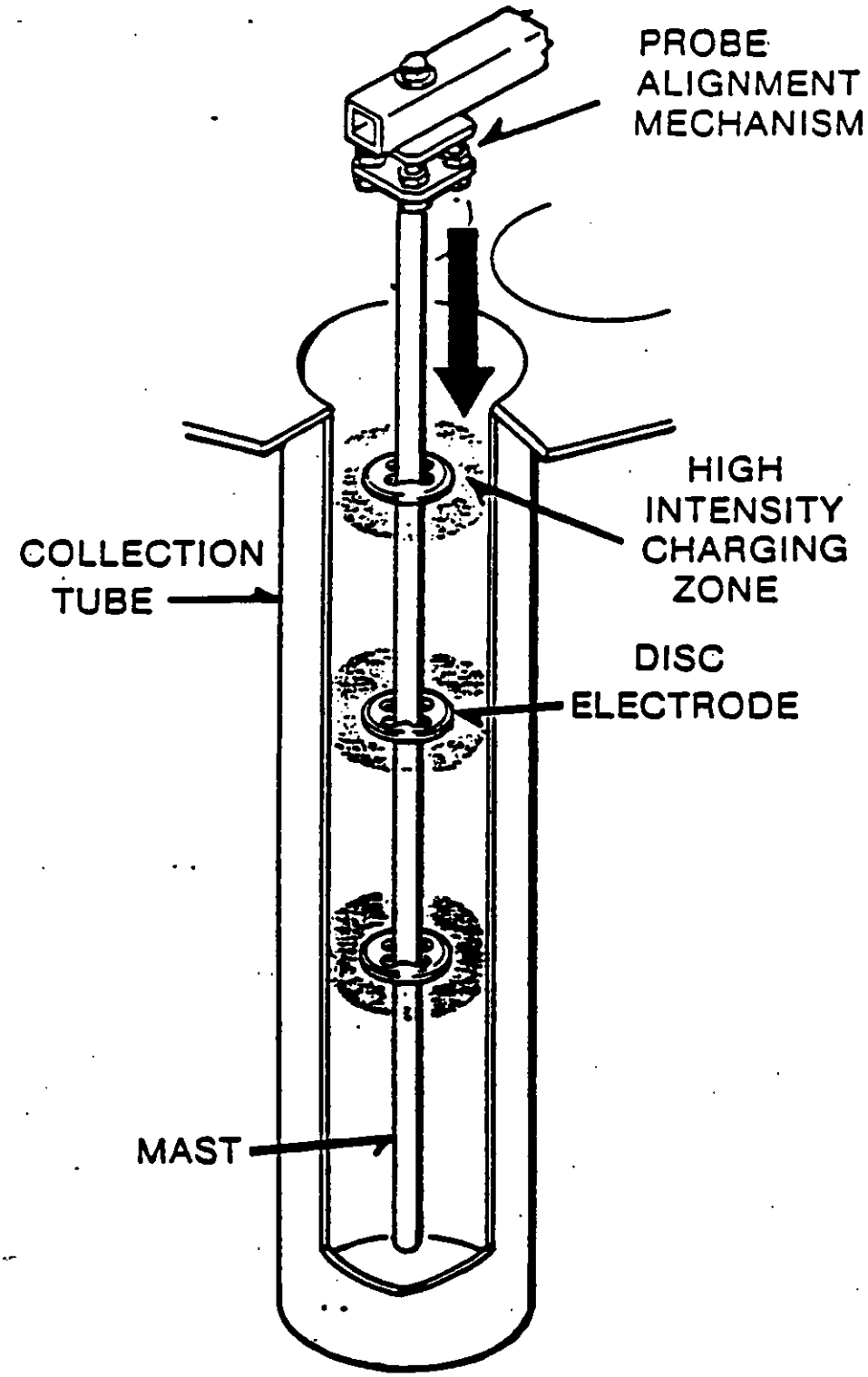

Figure 3-7. Schematic of the disk-in-tube geometry of discharge electrode and collection surface in a tube-type wet ESP.[13]

for a 2-minute period to clean the already-wetted tube surface where the PM is collected. The water is collected in a settling tank to separate the PM from the water. The water from the settling tank is used for quenching the gaseous stream prior to its entering the control device.[13]

Pollution removal efficiency. At this time, data indicating the efficiency of wet ESP's in removing pollutants from veneer dryer exhaust streams are limited. ~~Tests conducted by ODEQ have indicated that the use of tube type wet ESP's for controlling PM resulting from veneer dryers can limit the emissions to 1.1 g/m^2 of product, 9.5-mm basis (0.224 lb/1,000 ft^2, 0.375 in. basis) for dryers where heat is supplied by combustion of sander dust and boiler exhaust.[9]~~ For this analysis, a PM-10 control efficiency of 80 percent has been assumed.

3.1.3 Pollution Prevention Techniques

The following control techniques are considered to be options for reducing dryer PM-10 emissions by process revisions, that is, pollution prevention.[~~15~~17]

3.1.3.1 Boiler Incineration.[17] Veneer dryer emissions are controlled at some locations by incineration in wood-fired boilers or furnaces. The entire exhaust flow from a steam-heated veneer dryer sometimes can be sent to a boiler, while only a portion of the exhaust from a direct-fired dryer is normally returned to the furnace or fuel cell. At least one U.S. plant has a direct-fired dryer with exhaust gas recycle to the furnace, but no such systems have been tested for emissions removal. Boiler incineration of veneer dryer emissions has not been demonstrated on a Southern pine veneer dryer. To utilize boiler incineration, the dryer outlet gases must be ducted to the boiler. This duct system must be insulated to keep the temperature above ~~150°C (~~300°F~~)~~ and must have isolation dampers to prevent the spread of fire, in the event of a dryer fire.[?] However, Georgia-Pacific reports problems with ducting any type of Southern pine dryer exhaust for any distance because of condensation. Condensation often occurs, even in the dryer, so insulation of the ductwork is of little value. In such cases,

steam-tracing of the ducts may be a viable alternative, although it has not been demonstrated in this application.[15]

Boiler incineration uses dryer exhaust as combustion air in the boiler. Dryer exhaust can be introduced as underfire air and/or overfire air. The most sophisticated systems involve automatic distribution of dryer exhaust as overfire and underfire air, according to steam demand.[15]

Because no additional combustion device is required in boiler incineration, the main capital expenditures are for ductwork, fans, pressure controllers, and boiler oversizing or modifications. All ducts are heavily insulated (or steam tracing is provided, as appropriate) to prevent condensation of dryer emissions. Boiler modifications include installing water-cooled grates as well as ports for introducing dryer exhaust.[15]

Several generalizations can be made about boiler incineration systems. Furnace temperatures of ~~1190°C (greater than~~ 2150°F~~)~~ or greater are found in most wood-fired boilers. These temperatures are above the minimum requirements for thermal destruction of hydrocarbons. Therefore, destruction efficiency may be largely a function of residence time and the turbulence or degree of mixing in the high-temperature area of the boilers. Boiler designs provide for a high degree of mixing to promote combustion of volatile materials from the fuel. Temperature and residence time considerations support the potential for a high overall removal rate of total veneer dryer emissions (perhaps greater than 90 percent) by boiler incineration. However, at least two attempts to measure the destruction efficiency of these systems for total organic emissions have been unsuccessful. A removal rate for condensible organic material of approximately 70 percent was suggested by the results of one test. A wet-scrubbing device on the boiler exhaust may be required to meet a high level of emissions reduction.[15]

Boiler incineration may not be a viable control technique for certain existing plants. The combined dryer exhaust volume for a typical plywood mill approaches the capacity of the plant boiler to accept combustion air. In some cases, that capacity

may be exceeded. For example, newer boilers that are designed to operate efficiently on relatively low excess air may be unable to accept the exhaust volume from all dryers. For this reason, new boilers might have to be oversized to accommodate the system.[15]

3.1.3.2 Fuel Cell Incineration.[~~16~~17] An alternative method of incineration of dryer exhaust gases is available when the dryer is heated by burning wood-waste fuel. A portion of the dryer exhaust gas is returned to a blending zone of the furnace or to a blend box and is mixed with the hot combustion gas from the wood-waste burner before being returned to the dryer. Combustion gases must be blended with dryer gases because combustion gases are too hot for direct injection to the dryer. Figure 3-8 is a schematic diagram of a typical system. The amount of dryer exhaust that reaches the blend box varies among systems. Systems that recycle a large fraction of the dryer exhaust (e.g., 65 percent) typically have blend box exit temperatures of ~~427°C (~~800°F~~)~~. When a smaller fraction of dryer exhaust is recycled (e.g., 35 percent), blend box exit temperatures are typically ~~621°C (~~1150°F~~)~~. High-temperature duct work and insulation are needed in the latter case.[15]

At least three types of systems currently are available for burning wood waste to heat the plywood veneer dryer. In the most common system, dry wood waste is burned in a cyclonic burner that is designed to hold wood particles in the burner until combustion is complete. Ambient air is introduced as combustion air. Hot combustion gases from the burner are mixed with dryer exhaust in a blend box and are returned to the dryer. Blend box exit temperatures are ~~427° to 649°C (~~800° to 1200°F~~)~~.[15].

In a second type of wood-fired system, wet or dry wood waste is burned in a pile furnace. Combustion air consists of ambient air and (typically) exhaust from the dry end of a veneer dryer. Dryer exhaust is introduced at various points in four combustion chambers, including the primary chamber containing the wood pile. Temperatures range from approximately ~~982° to 1093°C (~~1800° to 2000°F~~)~~ at the primary chamber to ~~427°C (~~800°F~~)~~ at the final chamber exit.[15]

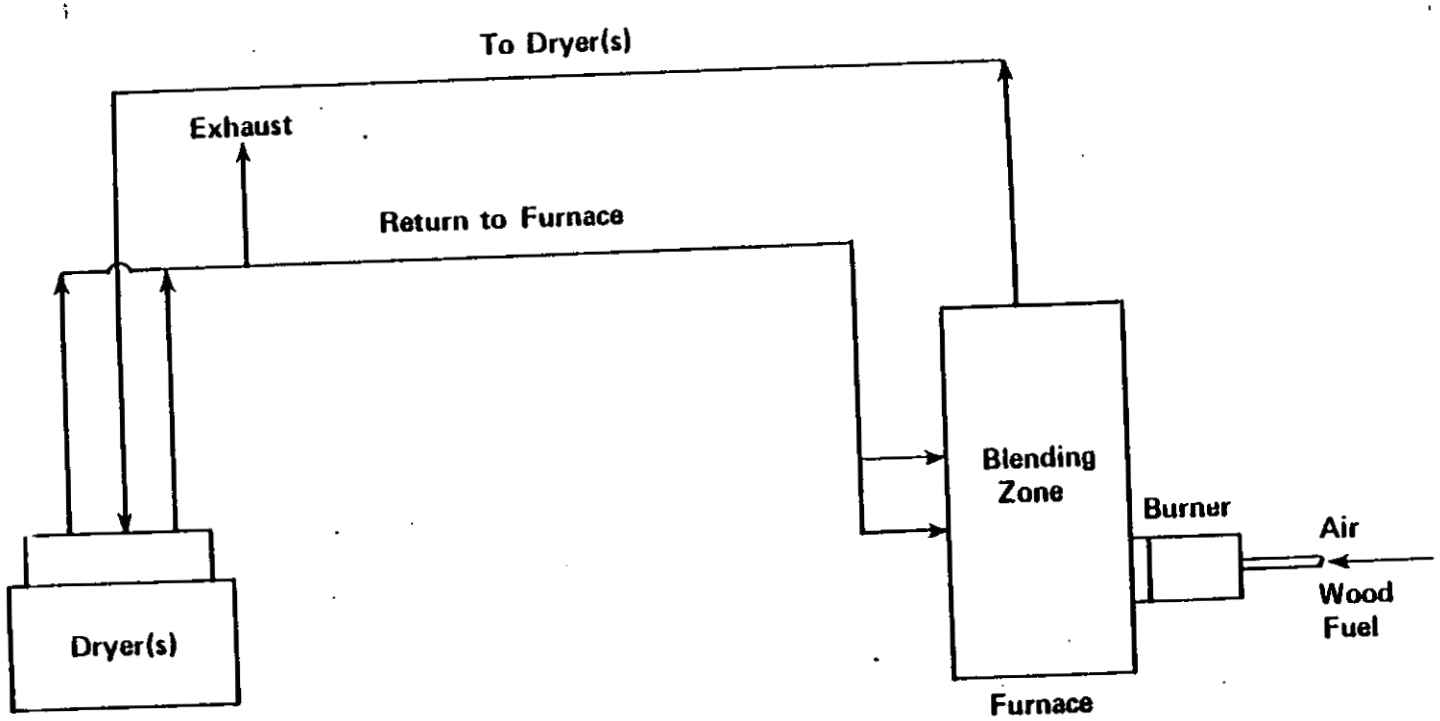

Figure 3-8. Flow diagram of a wood-fired dryer system with partial incineration in a fuel cell.[15,17]

Finally, a direct-fired system is used in which wet or dry wood waste is introduced into a fluidized furnace. Ambient air is used as combustion air. Combustion products at approximately ~~871° to 982°C (~~1600° to 1800°F~~)~~ are mixed with the dryer return flow in a blend box; the resulting mixture is ducted to the dryer at ~~427° to 649°C (~~800° to 1200°F~~)~~.[15].

The fate of the condensible organic material is masked by the inorganic PM (ash) load characteristic of direct-fired systems. Existing data do not indicate the percentage of pollutants removed in the blend box. In such systems, inorganic PM (ash) may settle out in the dryer or impinge on the veneer surface, whereas organic material may be partially destroyed in the blend area. The exhaust from wood-fired veneer dryer systems is sometimes further controlled by high-efficiency wet-scrubbing devices such as the combination packed tower and cyclone or the ionizing wet scrubber.[15]

A scheme for using all of the dryer exhaust gases has been conceptualized (but not demonstrated in practice) that would recycle a portion of the gases back to the dryer and use the remaining gases as combustion air. It is stressed that this is a conceptualized system and that the required technology (especially burner technology) may not currently exist. Figure 3-9 diagrams the concept of this direct-fired exhaust incineration system. Ambient air would be heated to required dryer temperatures in an air-to-air heat exchanger using hot furnace exhaust gases. A portion of the dryer exhaust gases would be used as combustion air for the wood fuel, and another portion (perhaps 40 percent) would be recycled to the dryer. Maintaining a fuel cell exhaust temperature of ~~760° to 871°C (~~1400° to 1600°F~~)~~ and providing sufficient residence time should achieve organic emissions removal efficiencies of greater than 90 percent. The disadvantages of this system include the need to modify currently available burner designs, increased difficulty in balancing air flows due to one or more additional fans and control dampers, and potentially increased fuel requirements.

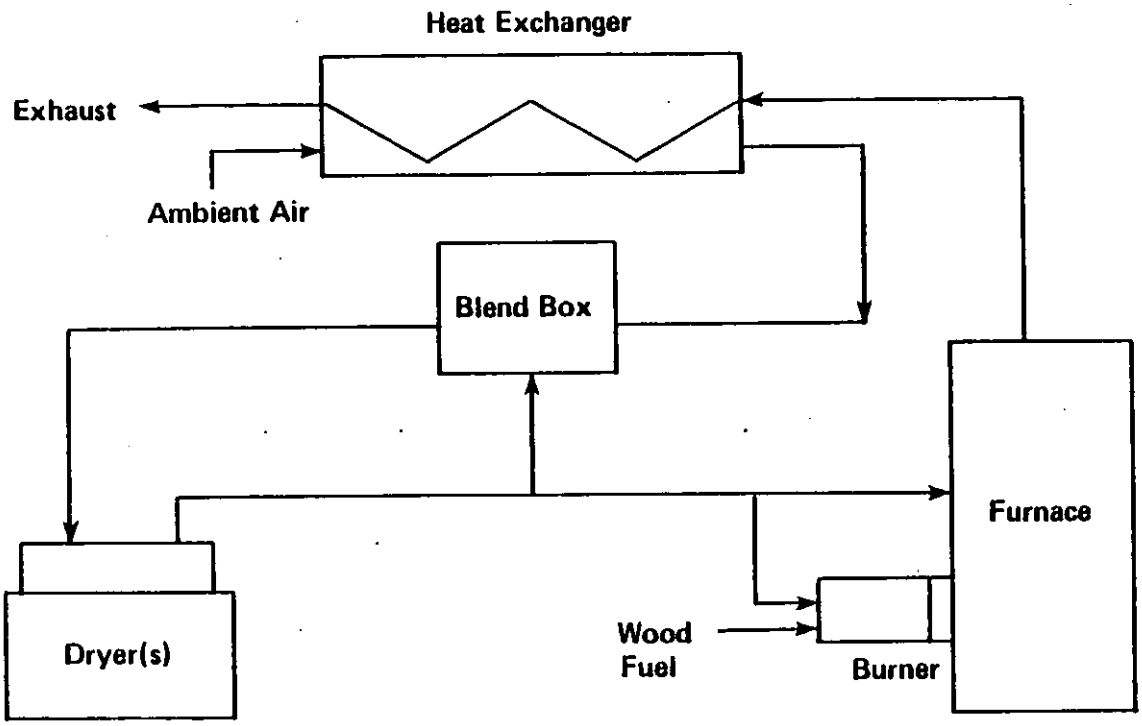

Figure 3-9. Flow diagram of a conceptual wood-fired system with complete incineration of dryer exhaust in a fuel cell.[15,17]

Balancing problems would tend to be more severe for systems involving multiple dryers, while additional fuel requirements would be crucial for plants that are marginally self-sufficient in fuel (e.g., layup plants).[15]

3.1.3.3 Dryer Temperature Control.[~~16~~17] Dryer emissions on a per-unit-of-production basis may be reduced by lowering dryer temperatures. This procedure reduces veneer production rates, because longer dryer times are required at lower temperatures. Low-temperature drying may only be feasible at facilities that have excess drying capacity, an uncommon situation. Maintaining the required air circulation rates in the dryer may substantially increase the electrical energy costs per unit of production. In tests of three dryers, PM and total organic emissions (as measured by a Washington State University method) were reduced by lowering dryer temperatures. Emission reductions varied greatly, with the highest reduction being 74 percent.[15]

3.1.3.4 Dryer Fugitive Emission Control.[~~16~~17] Fugitive emissions can make up a significant portion of the total emissions from a veneer dryer. The main factors effecting the quantity of fugitive emissions are the type of dryer, the condition of door seals and end baffles, and stack damper settings. In the Northwest, stack dampers generally are set to maintain a desirable moisture level inside the dryers. Damper settings also can be used to balance the air flows within a dryer and, thus, to minimize energy loss. This is especially true for longitudinal dryers, for which it is desirable to maintain neutral pressure at dryer ends by means of the dampers. In the South, dampers are set in the closed position on many jet dryers. The emissions that do not leave through stack exhausts must escape as fugitive emissions through the doors, skins, and ends of the dryers. In-plant observations indicate that fugitive emissions may be significant, but quantitative measurements of fugitive emissions are not available.[15]

Control techniques for minimizing fugitive emissions include maintenance of door seals, dryer skins, tops, and end baffles; proper balancing of air flows (considering the effect of damper

settings on internal dryer pressure); and use of end-sealing sections. Dryer doors can be sealed and shimmed as necessary to eliminate visible emissions caused by leaks. New seals are usually needed only every 2 years; however, quarterly inspection and maintenance of seals may be reasonable because of the energy losses and emissions associated with leaking doors. Maintenance of skins and tops consists of applying a sealing material where feasible and replacing those portions when other methods are no longer adequate.[15]

End-sealing sections are pressurized sections added to a dryer to prevent emissions and energy loss from the ends of a dryer or to prevent infiltration of cold air into the dryer. End seal sections may be positively or negatively pressurized. No data are available to show the effectiveness of end seal sections in controlling fugitive emissions.[15]

3.2 CONTROL TECHNIQUES FOR BOILER PM-10 EMISSIONS

The burning of wood waste in boilers and other similar combustion equipment is a common practice in the plywood industry. These plants produce as a byproduct a relatively large quantity of waste in the form of bark, sawdust, sanderdust, board trim material, and miscellaneous unusable log yard waste. The wood waste is used as fuel for boilers and other wet-cell burners to meet the demand for heat throughout the plant and to alleviate possible solid waste disposal problems. A common characteristic of all plants is the need to provide heat to the veneer press. Some plants, mainly those located in colder climates, require that heat also be supplied to hot ponds to prevent logs entering the process from freezing in the winter. Occasionally, one may find a mill that uses exhaust gases from a boiler or thermal oil heater as primary or supplemental heat to a wood furnish dryer. In this case, emissions from the boiler or thermal oil heater are a component of the dryer exhaust and are, therefore, controlled by the dryer emission control device.

It is standard design practice today for wood-fired boilers to be equipped with mechanical PM control devices, usually cyclone or multitubular cyclonic collectors (multiclones). These

devices generally have a better than 80 percent control of PM emissions.[~~18~~18] However, to achieve greater control of PM-10 emissions, additional control equipment is required.

3.2.1 Emission Stream Characteristics

Combustion of wood waste in a boiler results in the formation of solid residue. While heavier residue is removed as bottom ash, the lighter material (fly ash) is carried by the flue gases and is emitted into the atmosphere as PM. Since a majority of the PM consists of partially combusted wood dust, the fly ash is collected in cyclone dust collectors and reinjected into the furnace for complete combustion. Recycling of fly ash results in higher boiler efficiency. The PM entrained in the gases exiting the cyclone can be further controlled using multiclones. It is standard practice today for newer boiler installations to be equipped with multiclones.

The flue gas from a wood-fired boiler or thermal oil heater is characterized by a particle size distribution with a large fraction of PM-10. About 90 percent of the total PM loading is less than 10 μm in diameter.[~~17~~18] Downstream of the multiclones, which effectively control the larger PM, 91 percent of the PM loading is PM-10 emissions.[~~17~~18] Furthermore, 24 percent of that loading is less than 1 μm in diameter.[~~17~~18] This fraction of small diameter particles makes it difficult for the emission control device to achieve high removal efficiency. An uncontrolled PM-10 emission factor of 6.48 lb/ton of wood/bark burned in a boiler is reported in the literature.[~~17~~18] For boilers equipped with multiclones and where fly ash is reinjected, a PM-10 emission factor of 5.46 lb/ton of woodbark burned is reported.[~~17~~18] Fly ash reinjection results in increased PM-10 emissions because the dust loading into the furnace is higher. For boilers equipped with multiclones where fly ash is not reinjected, a PM-10 emission factor of 1.72 lb/ton of wood/bark burned is reported.[~~17~~18] In this analysis, it is assumed that flyash is reinjected, therefore, the PM-10 emission factor of 5.46 lb/ton of wood/bark burned is used.

3.2.2 Demonstrated Control Techniques

This section provides a description of emission control techniques demonstrated for controlling PM-10 emissions resulting from combustion of wood waste.

3.2.2.1 Dry Electrostatic Precipitators. Dry ESP's are often selected for effective, high-efficiency control of PM emissions from wood-fired boiler flue gas. In this device, the PM is electrically charged and is collected by plates of the opposite charge. The material collected is released by shaking or rapping the plates. Figure 3-10 shows a typical dry ESP.[~~18~~19] Electrostatic precipitator (dry or wet) performance depends on seven primary factors: (1) available collecting surface, (2) exhaust gas flow rate, (3) particle resistivity, (4) particle size distribution, (5) gas velocity distribution, (6) rapping intensity and frequency, and (7) electrical field strength.[~~19~~20]

Pollutant removal efficiency. Overall PM removal efficiencies of over 99 percent have been demonstrated during pilot tests for bark/coal co-fired boilers equipped with dry electrostatic precipitators.[~~20~~21] Particle size distribution affects the efficiency of the collector due to two phenomena: the type of particle charging, and the effect of fine particles on the corona penetration at the discharge electrode. The efficiency of the ESP is reduced as the overall particle size distribution enters the low and submicron levels. Data pertaining to PM-10 removal efficiency for wood waste combustion are rather limited. However, during the evaluation of a dry ESP as a potential PM-10 control device, a PM-10 removal efficiency of 99 percent was assumed based on the data from the pilot tests referenced previously.

3.2.2.2 Wet Electrostatic Precipitators. Wet ESP's (especially tube-type wet ESP's) have been used to control PM-10 emissions resulting from the combustion of wood waste in a boiler. A detailed description of tube-type wet ESP's is given in Section 3.1.2.6. Conversation with a wet ESP vendor has indicated that this technology ~~is~~ may be more suited for existing boilers, especially Dutch oven-type boilers, where oxygen content

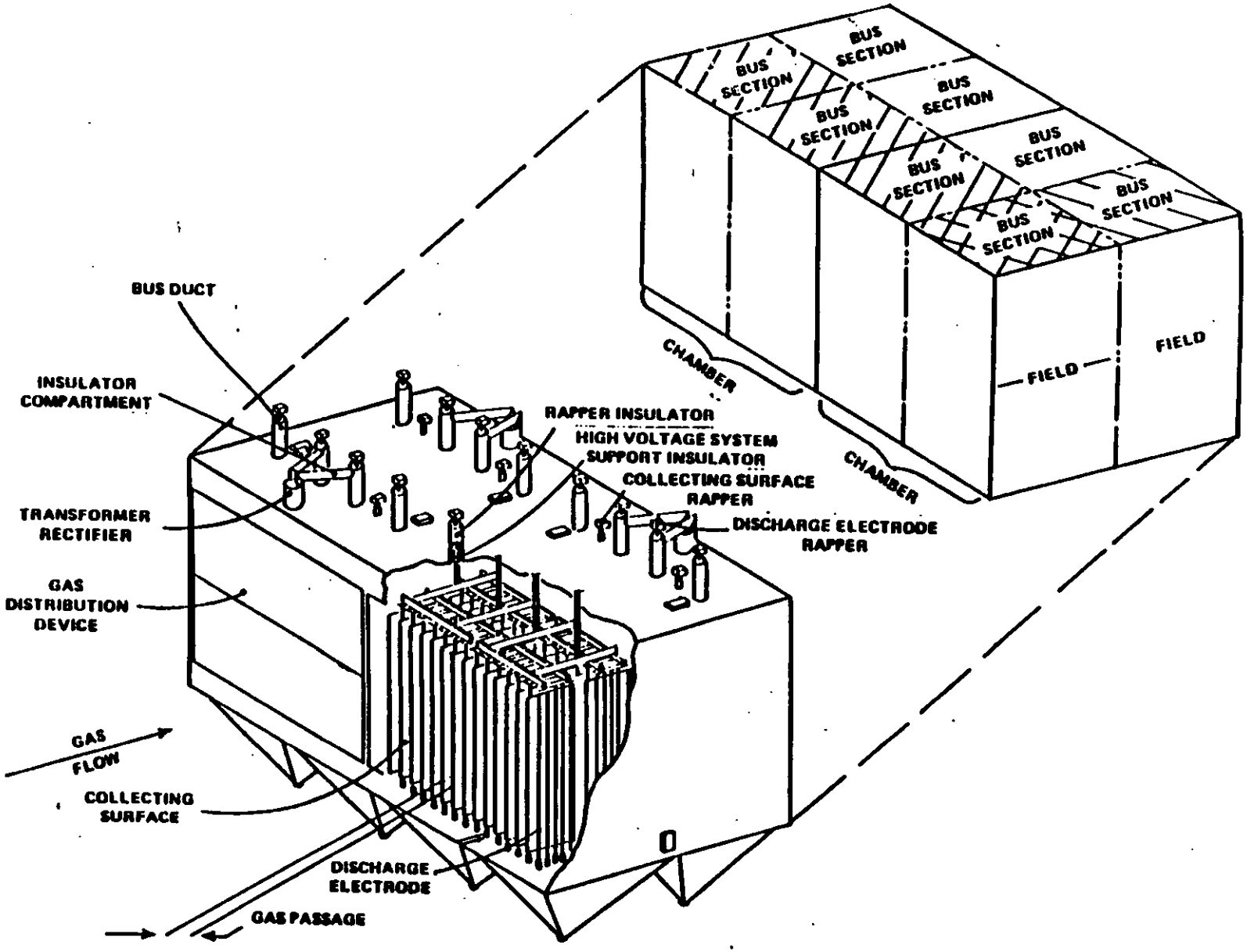

Figure 3-10. Schematic of a dry electrostatic precipitator.[19]

may be higher than 15 percent by volume in the flue gases. High oxygen content in old boiler installations can potentially result in generation of sparks.[~~21~~22]

Pollutant removal efficiency. During a recent source test conducted at a facility in Oregon, a wet ESP was observed to reduce PM emissions from a wood waste-fired boiler by 98 percent. No information is available pertaining to PM-10 removal efficiency during this test.[~~22~~4]

3.2.2.3 Electrified Filter Bed. A detailed description of the EFB is contained in Section 3.1.2.5. Electrified filter beds have been used to control PM emissions from wood-fired boilers. A quotation received from a vendor has claimed a PM-10 removal efficiency of 95 percent for wood-fired boilers.[~~23~~3]

3.2.2.4 Venturi Scrubbers. Wet scrubbers are commonly used downstream of multiclones to remove PM from wood-fired boiler flue gas. Venturi scrubbers are the most common type of scrubber used because of the recent emphasis on controlling PM-10 emissions.

Venturi scrubbers rely on the ~~phenomena~~ action of increased energy concentration and intimate contact of the pollutant and liquid sprayed into the device as the gas stream passes through a reduced throat area. The collection efficiency is proportional to the gas pressure drop across the throat; hence the terminology of low-, medium-, and high-energy venturi has developed.

The typical venturi, illustrated in Figure 3-11, is designed such that the dirty flue gas makes initial contact with the scrubbing liquor in the throat of the venturi section.[~~24~~23] The restrictive narrowing of the throat greatly increases the gas velocity, atomizing the liquor droplets.[~~25~~24] The droplets are then impacted by the PM in the gas stream. The PM-laden droplets are then removed from the gas stream by a cyclonic separator or mist eliminator.[~~26~~25]

Factors affecting the performance of venturi scrubbers include the following: (1) contacting power (gas-phase pressure drop and liquid nozzle pressure drop), (2) liquid-to-gas ratio,

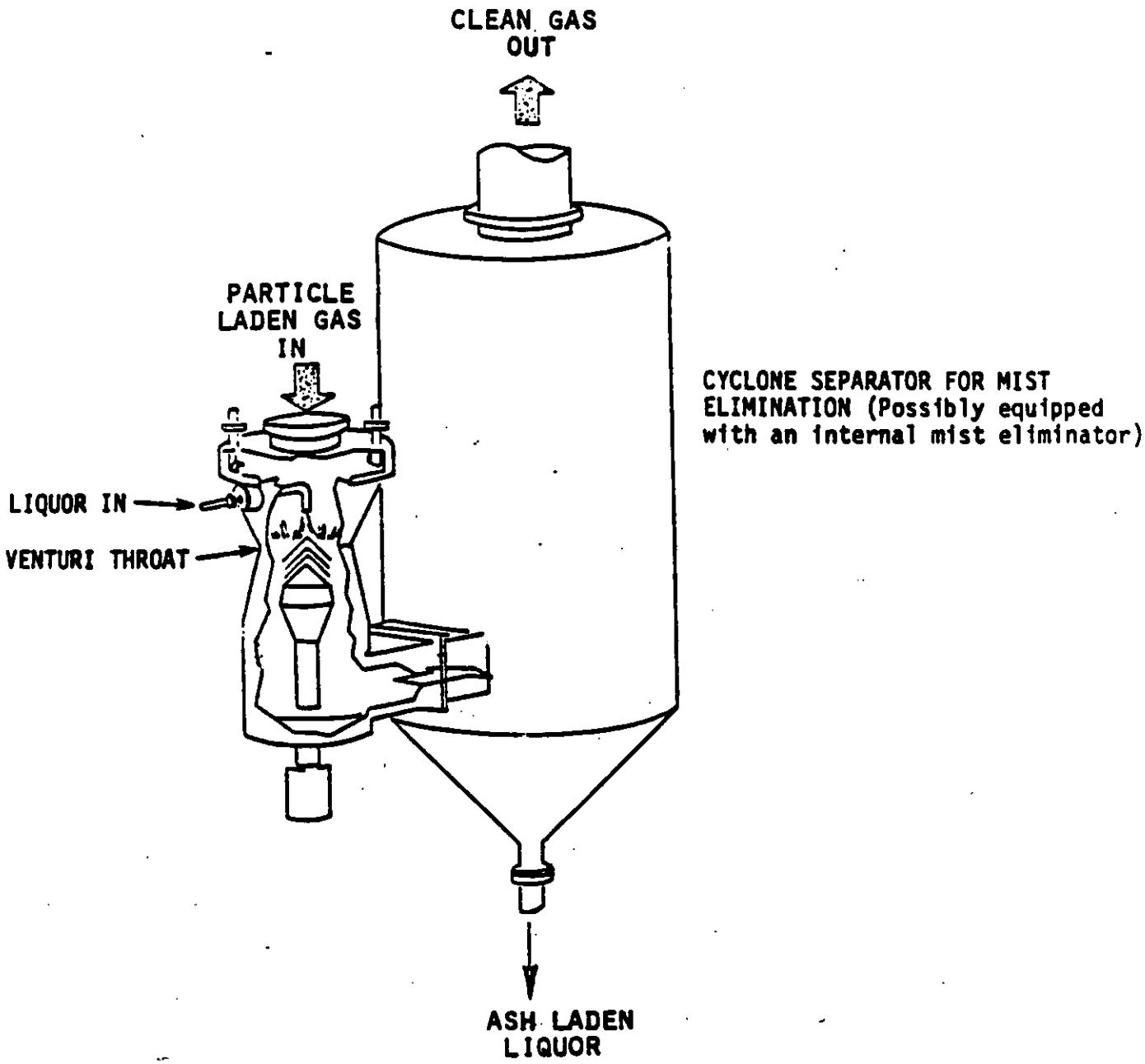

Figure 3-11. Schematic of a variable-throat venturi scrubber.[23]

(3) carryout of scrubber liquor, (4) particle size distribution, and (5) PM grain loading.[27,26]

Contacting power is usually the primary factor affecting particle removal, with the other factors contributing to a lesser degree. An increase in pressure drop creates smaller liquid droplets that are more efficient at collecting PM-10. In ejector venturis, a high-pressure spray is used to create the pressure drop, instead of high gas velocity. In this case the contacting power is determined by the scrubbing liquor nozzle pressure drop instead of the gas pressure drop.[27,26]

Typical gas velocities through a venturi throat range from 61 to 183 m/s (200 to 600 ft/s). Typical liquid-to-gas ratios range from 1.0 to 2.0 L/m^3 (8 to 15 $gal/1,000\ ft^3$).

Pollutant removal efficiency.[27] The efficiency of venturi scrubbers in controlling PM-10 emissions can be as high as 99.9 percent.[28] Pressure drop is the most important parameter that determines the performance of a venturi scrubber. A very high pressure drop can be detrimental because it can reduce overall PM control efficiency. The reduction can occur because liquid droplets with entrained PM can be carried over by the exiting gas stream, and the liquid droplets can subsequently evaporate and release any PM entrained in them.[28]

3.2.2.5 Fabric Filters. In many cases, fabric filters are the most efficient control device for removing suspended PM from an air stream. Collection efficiencies of better than 90 percent are possible for submicron particles, and efficiencies of almost 100 percent are normal for particles more than 1 μm in size. Overall PM removal efficiency for a fabric filter is typically expected to be better than 99 percent.

The fabric filter is a series of cylindrical bags supported in an enclosure through which the gas stream must pass. As the gas passes through the filter, solid PM becomes trapped on the inlet side of the filter media or fabric. The characteristics of the filter and the gas stream become the critical factors in determining efficiency.

Figure 3-12 shows a typical fabric filter.[29~~28~~] As the boiler flue gas passes through the fabric bags, PM in the gas is trapped on the filter by inertial impaction, diffusion, direct interception, and sieving. With new or clean bags, the first three processes predominate. However, as the PM layer on the fabric accumulates, sieving becomes the primary removal process, especially with PM loadings above 1 g/m^3 (0.437 gr/ft^3).[30~~29~~]

Collection efficiency and pressure drop increase as the PM layer builds up on the fabric. Since the collector cannot tolerate a continuously increasing pressure drop, the bags are periodically cleaned by shaking, reversing air flow, or injecting a short burst of high-pressure air. Any method fractures the PM layer, causing it to fall into a collection hopper below.

The primary problem with using fabric filters to control wood-fired boiler flue gas is the fire hazard resulting from the collection of combustible fly ash or hot embers. By 1982, seven installations were documented.[30~~29~~] The fire potential certainly exists, as one manufacturer experienced a number of fires in the fabric filter at one location. The cause was determined to be that the primary cyclone system was not operating efficiently enough to prevent large, hot embers from passing to the fabric filter and initiating the fires. The cyclones were modified, and the fabric filter continues to be used to control PM-10 emissions.

Other manufacturers have found that the risk of fabric filter fires can be minimized by:

1. Water-quenching the gas stream prior to the fabric filter;

2. Minimizing the in-leakage of air;

3. Establishing a shorter cleaning cycle that prevents the build-up of a thick layer of PM;

4. Bypassing the fabric filter during cyclone cleaning or sootblowing, when sparks might reach the fabric filter; and

5. Removing large, hot embers in multiclone precleaners.[31~~30~~]

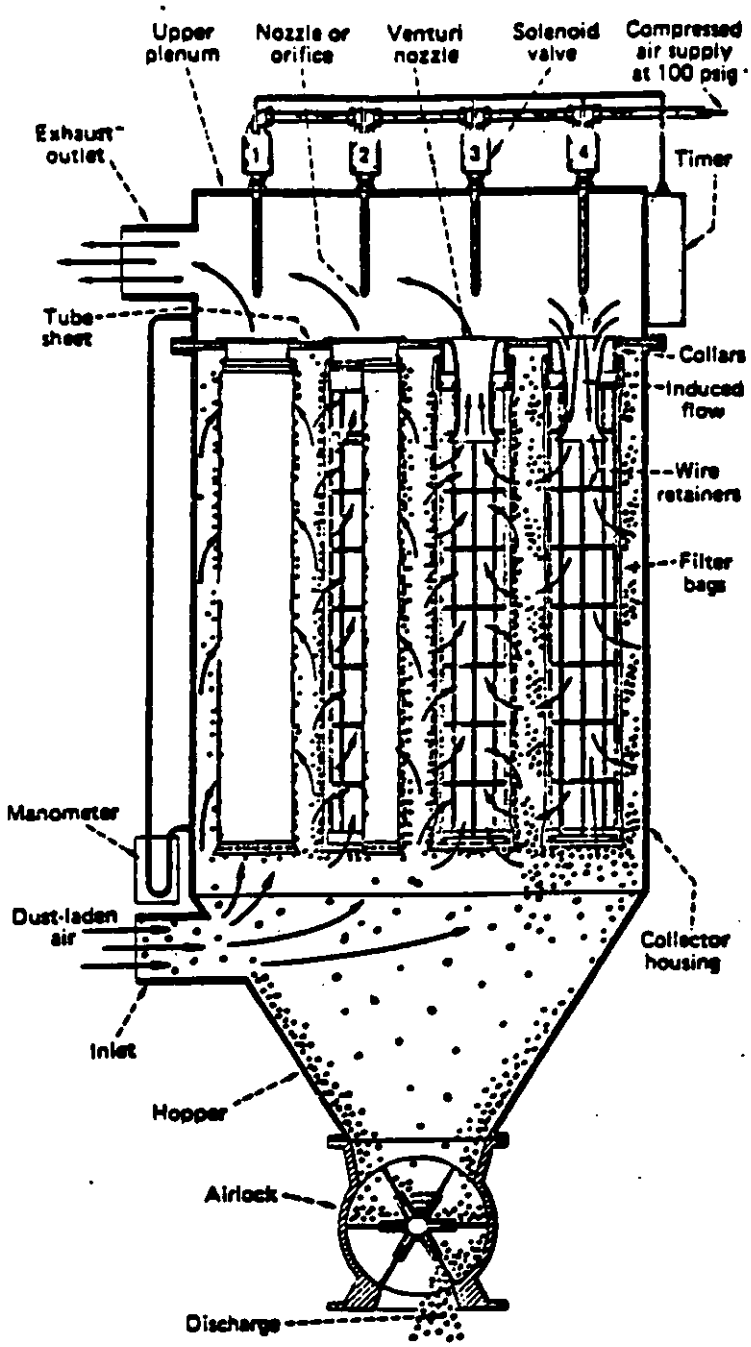

Figure 3-12. Schematic of a typical pulse-jet fabric filter.[28]

In addition, a sprinkler system may be installed in the fabric filter, or a spark quench system consisting of a flame detector and an extinguishing agent may be installed prior to the fabric filter.[31]30

Pollutant removal efficiency. Fabric filters have been reported to reduce PM-10 emissions at removal efficiencies greater than 99 percent for fossil fuel-fired (including coal-fired) boilers. Data pertaining to PM-10 removal efficiency fabric filters used to control PM-10 emissions from wood fired box waste-fired boilers are limited. A 99 percent PM-10 removal efficiency was assumed.

3.3 CONTROL OF SANDING AND TRIMMING PM-10 EMISSIONS

Plywood is sanded and trimmed to specifications prescribed by the customer. As described in Chapter 2, sanding and trimming is a major source of PM. Mick and McCargar (1969) have reported that many Oregon firms were installing well-engineered cyclone systems for primary collection with fabric filters for final collection in the late 1960's.[32,33]31 The PM recovered from the cyclone and fabric filter is burned in the wood waste-fired boiler onsite. Based on the above report, the use of fabric filters to control PM-10 emissions resulting from the sanding and trimming operations is concluded to be the state-of-the-art within plywood manufacturing facilities. For this analysis, it is assumed that all plywood manufacturing facilities already use fabric filters in conjunction with primary cyclones to control the PM-10 emissions resulting from plywood sanding.

3.4 CONTROL TECHNIQUES FOR NONPROCESS FUGITIVE PM-10 EMISSIONS

Nonprocess fugitive dust emissions refer to those air pollutants that enter the atmosphere without first passing through a stack or duct designed to direct or control their flow. Several nonprocess sources generate these fugitive emissions, including wind erosion from storage piles. This section discusses control methods designed to reduce PM-10 emissions from this source.

Storage piles.[32] Storage piles are usually left uncovered, partially because of the need for frequent material transfer. Dust emissions occur at several points in the storage cycle: during material loading onto the pile, during disturbances by strong wind currents, and during loadout from the pile. The movement of trucks and loading equipment in the storage pile area is also a substantial source of dust. Preventative methods for control of windblown emissions from raw material storage piles include enclosures, wetting, and chemical stabilization. These methods are discussed in the following sections.[33]

3.4.1 Enclosures[32]

Enclosures are an effective way to control fugitive PM emissions from open dust sources. Enclosures can either fully or partially enclose the storage pile and transfer mechanisms to and from the plant or trucks. Types of passive enclosures traditionally used for open dust control include three-sided bunkers for storage of bulk materials, storage silos for various types of material (in lieu of open piles), and open-ended buildings. Partial enclosures used for reducing windblown dust from large exposed areas and storage piles include porous wind screens and similar types of barriers (e.g., trees). The principle of the wind fence/barrier is to provide an area of reduced wind velocity, which allows settling of the large particles (which cause saltation) and reduces the particle flux from the exposed surface on the leeward side of the fence/barrier.[33]

3.4.2 Wet Suppression Systems[32]

Fugitive emissions from materials handling systems are frequently controlled by wet suppression systems. These systems use liquid sprays or foam to suppress the formation of airborne dust. The primary control mechanisms are those that prevent emissions through agglomerate formation by combining small dust particles with larger aggregate or with liquid droplets. The key factors affecting the degree of agglomeration and the performance of the system are the coverage of the material by the liquid and the ability of the liquid to wet small particles.[33]

3.4.3 Chemical Stabilization[32]

Chemical stabilization involves using chemical dust suppressants to control fugitive PM emissions from material storage piles. Control efficiencies have been determined in portable wind tunnel tests on various types of materials and show that chemical stabilization is a viable option to control fugitive dust emissions from storage piles.[33]

~~3.5 SUMMARY~~

~~Table 3-1 contains a summary of technically demonstrated or potential control techniques (and ranges of control efficiencies) used to control PM-10 emissions resulting from various operations at plywood plants.~~

3.5 REFERENCES FOR CHAPTER 3

1. Letter from Alexander, J.C., EGB Filters, Inc., to Hayes, T., MRI. January 22, 1992. Electrified filter bed cost quotations and supplemental data.

2. Control Techniques for Organic Emissions from Plywood Veneer Dryers. Research Triangle Institute. Research Triangle Park, NC. March 1983. pp. 3-1 - 3-6.

3. Letter from Alexander, J.C., EGB Filters, Inc., to Hayes, T., MRI. April 10, 1992. Electrified filter bed cost quotations and supplemental data.

4. Hansen, K.A., et al. (Am Test, Inc.). Source Emission Evaluation. Prepared for Bohemia Inc. Coburg, OR. January 8, 1991.

5. Reference 2, p. 2-18 - 2-19.

6. Reference 2, pp. 2-19.

7. Telecon. Kalagnanam, R.S., MRI, with Ruscigno, J., Oregon Department of Environmental Quality, Portland, OR. April 14, 1992. Status of wet scrubbers for veneer dryer emission control.

8. Telecon. Kalagnanam, R.S., MRI, with Gill, L., Medford Corporation, Medford, OR. April 14, 1992. Status of wet scrubbers for veneer dryer emission control.

9. Telecon. Portzer, J., MRI, with McGee, A., and T. Fisher, Coe Manufacturing, Inc., Portland, OR. December 12, 1991. Status of combination packed tower and cyclonic collector for veneer dryer emission control.

10. Telecon. Kalagnanam, R.S., MRI, with Barrett, R., Willamette Industries, Albany, OR. April 24, 1992. Status of sand filter scrubber for veneer dryer emission control.

11. IWS™ System. Ceilcote/Air Pollution Control. Berea, OH. Bulletin 12-19. Brochure containing description of ionizing wet scrubber.

12. Vaught, C. C. Evaluation of Emission Control Devices at Waferboard Plants. Control Technology Center, Office of Air Quality Planning and Standards, U. S. Environmental Protection Agency. Research Triangle Park, N.C. Publication No. EPA-450/3-90-002. Chapter 7.

13. The E-Tube Wet Electrostatic Precipitator Dryer Emission Control System. Geoenergy International Corporation. Kent, WA. Brochure containing description of E-Tube wet ESP.

14. United McGill Electrostatic Precipitators. United McGill Corporation. Columbus, OH. Brochure containing a description of electrostatic precipitators.

15. Otero, S. Controlling Wood Dryer Emissions With A Wet Elecrostatic Precipitator. Presented at The National Particleboard Association/American Plywood Association Pollution Control Seminars. Atlanta, GA. October 17-November 6, 1991. Exhibit 3.

16. Telecon. Kalagnanam, R.S., MRI, with Emery, J., American Plywood Association, Tacoma, WA. May 6, 1992. Control technologies used for veneer dryers.

17. Reference 2, pp. 3-6 - 3-13.

18. Compilation of Air Pollutant Emission Factors, Volume I: Stationary Point and Area Sources (AP-42), Fourth Edition. U. S. Environmental Protection Agency. Research Triangle Park, NC. September 1985. pp. 1.6-1 - 1.6-10.

19. Nonfossil Fuel Fired Industrial Boilers - Background Information. Draft EIS. U.S. Environmental Protection Agency. Research Triangle Park, NC. Publication No. EPA-450/3-82-007. March 1982. p. 4-30.

20. Reference 19, p. 4-31.

21. Reference 19, p. 4-38.

22. Telecon. Kalagnanam, R.S., MRI, with Raemhild, G.A., Geoenergy International Corp., Kent, WA. May 13, 1992. Tube-type wet ESP technology for PM-10 removal from boilers.

23. Reference 19, p. 4-17.

24. Reference 19, p. 4-15.

25. Reference 19, p. 4-18.

26. Reference 19, p. 4-19.

27. Handbook. Control Technologies for Hazardous Air Pollutants. U. S. Environmental Protection Agency. Cincinnati, OH. Publication No. EPA 625/6-91-014. June 1991. p. 4-92.

28. Reference 19, p. 4-25.

29. Reference 19, p. 4-24.

30. Reference 19, p. 4-27.

31. Mick, A., and D. McCargar. Air Pollution Problems in Plywood, Particleboard, and Hardboard mills in the Mid-Willamette Valley. Salem, OR. Mid-Willamette Valley Air Pollution Authority. March 24, 1969. 26 p.

32. Control of Open Fugitive Dust Sources. U. S. Environmental Protection Agency. Research Triangle Park, NC. 8 Publication No. EPA-450/3-88-008. September 1988.

4.0 ENVIRONMENTAL IMPACTS ANALYSIS

4.1 INTRODUCTION

This chapter discusses the environmental impacts that would result from the application of various PM-10 emission control technologies described in Chapter 3 to the emission sources described in Chapter 2. The environmental impacts include the reduction of PM-10 emissions and the generation of wastewater and solid waste streams. A discussion of energy impacts is also included.

Section 4.2 ~~describes~~estimates the reduction in PM-10 emissions achieved as a result of employing various PM-10 emission control techniques. Details pertaining to liquid waste generation as a result of employing various PM-10 emission control techniques, the treatment of this liquid waste, and its recirculation are presented in Section 4.3. Section 4.4 contains a description of the solid waste generated by the various PM-10 emission control techniques and disposal practices employed at plywood manufacturing facilities. Section 4.5 contains details pertaining to additional energy required to operate the various PM-10 emission control alternatives described in Chapter 3. Finally, Section 4.6 lists the references cited in this chapter.

4.2 PM-10 EMISSION REDUCTION

This section describes and quantifies the estimated amounts of PM-10 reduction that can be achieved from the sources in the model plants, as a function of the type of control technology

that is applied. Emission sources for which emission controls were determined to apply include:

1. Veneer dryers; and
2. Wood waste-fired boilers.

Model plants considered in this analysis are described in Chapter 2. Model plants are divided into three categories, small, medium, and large, based on production rates. Table 4-1 presents uncontrolled PM-10 emission rates from the two emission sources at the small, medium, and large model plants. It is evident from Table 4-1 that the wood waste-fired boiler is the major source of PM-10 emissions at plywood plants.

4.2.1 Veneer Dryer

Emission control devices evaluated for reducing PM-10 emissions from the veneer dryer include:

1. Ionizing wet scrubber;
2. Wet electrostatic precipitator (ESP) (plate-type and tube-type); and
3. Electrified filter bed (EFB).

Chapter 3 contains a description of these emission control technologies and associated achievable PM-10 reduction efficiencies ~~practically achievable~~. Tables 4-2 through 4-4 present a summary of uncontrolled and controlled PM-10 emissions and emission reductions achieved upon application of the above add-on emission control devices for veneer dryers at each model plant~~,~~. ~~respectively.~~

4.2.2 Wood Waste-Fired Boiler

Emission control devices evaluated for reducing PM-10 emissions from ~~the~~ wood waste-fired boiler~~s~~ include:

1. Fabric filter;
2. Dry ESP;
3. Venturi scrubber; ~~and~~
4. Tube-type wet ESP; and
~~4~~5. Electrified filter bed.

Chapter 3 contains a description of these emission control technologies and associated PM-10 reduction efficiencies practically achievable. Tables 4-2 through 4-4 present a summary

TABLE 4-1. UNCONTROLLED PM-10 EMISSION RATES FROM MODEL PLANTS[a]

Emission source	Emission rate, lb/hr (tons/yr)		
	Small	Medium	Large
Veneer dryer	6.2 (26)	19 (80)	37 (155)
Wood waste-fired boiler[b]	22 (93) 19 (78)	73 (308) 62 (259)	146 (612) 123 (516)

[a]See Chapter 2, Table 2-3 for the emission factors used to estimate the emission rates.
[b]Two sets of emission rates reported. The higher numbers correspond to boilers not equipped with multiclones.

TABLE 4-2. SUMMARY OF UNCONTROLLED AND CONTROLLED PM-10 EMISSIONS FROM THE SMALL MODEL PLANT FOR ALTERNATIVE CONTROL TECHNOLOGIES

Source type	Emission rate type	Fabric filter, lb/hr (ton/yr)	Dry ESP, lb/hr (ton/yr)	Plate-type wet ESP, lb/hr (ton/yr)	Tube-type wet ESP, lb/hr (ton/yr)	Electrified filter bed, lb/hr (ton/yr)	Ionizing wet scrubber, lb/hr (tons/yr)	Venturi scrubber, lb/hr (ton/yr)
Veneer dryer[a]	Uncontrolled			6.2 (26)	6.2 (26)	6.2 (26)	6.2 (26)	
	Controlled			1.2 (5)	1.2 (5)	1.2 (5)	1.2 (5)	
	Emission reduction			5 (21)	5 (21)	5 (21)	5 (21)	
Boiler[b]	Uncontrolled	22 (93)	22 (93)		22 (93)	22 (93)		22 (93)
	Controlled	0.2 (1)	0.2 (1)		0.4 (2)	1.1 (4.75)		0.2 (1)
	Emission reduction[c]	22 (92)	22 (92)		22 (91)	21 (88)		22 (92)

[a]The PM-10 control efficiencies used for the estimation of emission reductions from the veneer dryer are:

Ionizing wet scrubber:	80 percent
Plate-type wet ESP:	80 percent
Tube-type wet ESP:	80 percent
EFB:	80 percent

[b]The PM-10 control efficiencies used for the estimation of emission reductions from the boiler are:

Fabric filter, dry ESP, and venturi scrubber:	99 percent
EFB:	95 percent
Tube-type wet ESP:	98 percent

[c]These are worst-case emission reductions based on the assumption that boilers are not equipped with multiclones.

TABLE 4-3. SUMMARY OF UNCONTROLLED AND CONTROLLED PM-10 EMISSIONS FROM THE MEDIUM MODEL PLANT FOR ALTERNATIVE CONTROL TECHNOLOGIES

Source type	Emission rate type	Fabric filter, lb/hr (ton/yr)	Dry ESP, lb/hr (ton/yr)	Plate-type wet ESP, lb/hr (ton/yr)	Tube-type wet ESP, lb/hr (ton/yr)	Electrified filter bed, lb/hr (ton/yr)	Ionizing wet scrubber, lb/hr (tons/yr)	Venturi scrubber, lb/hr (ton/yr)
Veneer dryer[a]	Uncontrolled			19 (80)	19 (80)	19 (80)	19 (80)	
	Controlled			4 (16)	4 (16)	4 (16)	4 (16)	
	Emission reduction			15 (64)	15 (64)	15 (64)	15 (64)	
Boiler[b]	Uncontrolled	73 (308)	73 (308)		73 (308)	73 (308)		73 (308)
	Controlled	1 (3)	1 (3)		2 (6)	4 (15)		1 (3)
	Emission reduction[c]	72 (305)	72 (305)		71 (302)	69 (293)		72 (305)

[a]The PM-10 control efficiencies used for the estimation of emission reductions from the veneer dryer are:

Ionizing wet scrubber: 80 percent
Plate-type wet ESP: 80 percent
Tube-type wet ESP: 80 percent
EFB: 80 percent

[b]The PM-10 control efficiencies used for the estimation of emission reductions from the boiler are:

Fabric filter, dry ESP, and venturi scrubber: 99 percent
EFB: 95 percent
Tube-type wet ESP: 98 percent

[c]These are worst-case emission reductions based on the assumption that boilers are not equipped with multiclones.

TABLE 4-4. SUMMARY OF UNCONTROLLED AND CONTROLLED PM-10 EMISSIONS FROM THE LARGE MODEL PLANT FOR ALTERNATIVE CONTROL TECHNOLOGIES

Source type	Emission rate type	Fabric filter, lb/hr (ton/yr)	Dry ESP, lb/hr (ton/yr)	Plate-type wet ESP, lb/hr (ton/yr)	Tube-type wet ESP, lb/hr (ton/yr)	Electrified filter bed, lb/hr (ton/yr)	Ionizing wet scrubber, lb/hr (tons/yr)	Venturi scrubber, lb/hr (ton/yr)
Veneer dryer[a]	Uncontrolled			37 (155)	37 (155)	37 (155)	37 (155)	
	Controlled			7.4 (31)	7.4 (31)	7.4 (31)	7.4 (31)	
	Emission reduction			30 (124)	30 (124)	30 (124)	30 (124)	
Boiler[b]	Uncontrolled	146 (612)	146 (612)		146 (612)	146 (612)		146 (612)
	Controlled	1.52 (6)	1.52 (6)		3 (12)	7 (31)		1.52 (6)
	Emission reduction[c]	144.5 (606)	144.5 (606)		143 (600)	139 (581)		144.5 (606)

[a]The PM-10 control efficiencies used for the estimation of emission reductions from the veneer dryer are:

Ionizing wet scrubber:	80 percent
Plate-type wet ESP:	80 percent
Tube-type wet ESP:	80 percent
EFB:	80 percent

[b]The PM-10 control efficiencies used for the estimation of emission reductions from the boiler are:

Fabric filter, dry ESP, and venturi scrubber:	99 percent
EFB:	95 percent
Tube-type wet ESP:	98 percent

[c]These are worst-case emission reductions based on the assumption that boilers are not equipped with multiclones.

of uncontrolled and controlled PM-10 emissions and emission reductions achieved upon application of the above add-on emission control devices for wood waste-fired boilers at each model plant~~, respectively.~~

Controlled PM-10 emission rates for the wood waste-fired boiler at the small, medium, and large model plants are estimated to range between 88 to 92, 293 to 305, and 581 to 606 tons/yr, respectively. The lower limit of the range corresponds to a plant where a fabric filter, dry ESP, or venturi scrubber is used to control PM-10 emissions. The upper limit corresponds to the emission rate achieved by using an EFB for PM-10 control.

4.3 GENERATION OF WASTE WATER

Using wet techniques for PM-10 emission control generates waste water streams. However, since wood products industries are classified per the Clean Water Act requirements as zero-discharge facilities, the waste water streams are not discharged into sewer systems or publicly owned treatment works (POTW's). Rather, the waste water generated as a result of using wet PM-10 emission control requirements is recycled into the process.

Ionizing wet scrubbers, wet ESP's, and venturi scrubbers were evaluated for controlling PM-10 emissions from the following operations:

1. Veneer dryers; and
2. Wood waste-fired boilers; and

Wet ESP's and ionizing wet scrubbers were evaluated for veneer dryers. The venturi scrubber was evaluated for the wood waste-fired boiler. Blowdown rates and procedures used to treat the waste water are described below.

When a wet ESP or an ionizing wet scrubber is used to control PM-10 emissions from a veneer dryer, the spent water is treated and recirculated. Spent water is generated at two locations within the wet ESP. A portion of the water used in the preconditioning section of the wet ESP condenses. This condensed water is collected in a settling tank. The collection surfaces in a wet ESP are cleaned by flushing with water, and this spent water is also collected in the settling tank. In this settling

tank, heavy solids settle to the bottom of the tank, and the clear water is recirculated in the wet ESP. During normal operation, a portion of the water being recirculated needs to be blown down to maintain a constant level of solids within the water. At facilities that use dryers equipped with wet ~~cell~~fuel burners, this blowdown water is sprayed onto the fuel to be burned in the burner. Facilities that do not use dryers equipped with wet ~~cell~~fuel burners treat the blowdown water in a secondary water treatment system and recirculate the clean water in the wet ESP. Makeup water needs to be added to make up for evaporative loss that takes place in the preconditioning section. Also, at facilities where blowdown water is sprayed onto the fuel, water lost must be made up. At facilities where a secondary treatment system is used to treat the blowdown water, even though the treated water is recirculated into the wet ESP, a portion of the water is retained by the solids, and this loss also must be made up.[1]

Blowdown should be carried out such that when the wet ESP or the ionizing wet scrubber is operating at a steady state, the rate of removal of solids in the blowdown water equals the rate at which the solids are introduced into the wet ESP from the dryer or press. The solids content in the blowdown water should be approximately 10 percent by weight.[2] Based on this criteria, blowdown rates were estimated for the two types of wet ESP's at the three model plants.

The operation of venturi scrubbers also requires a constant blowdown of the scrubbing water to maintain a prescribed solids content in the recirculating portion of the scrubbing water. The scrubber water blowdown rate for the venturi scrubber was estimated based on the method prescribed by a vendor experienced in the operation of venturi scrubbers. This vendor suggested that the blowdown should be carried out such that when the venturi scrubber is operating at steady state, the rate of removal of solids in the blowdown water equals the rate at which solids are introduced into the venturi scrubber. Further, it was also suggested that the solids content in the blowdown water

should be approximately 2 percent by weight.[2] Based on these criteria, blowdown water rates were estimated for the venturi scrubbers at the three model plants. The blowdown water can also be automatically sprayed onto the fuel as described above, or treated in a secondary treatment system and recirculated back to the venturi scrubber.

Tables 4-5 through 4-7 contain blowdown data for the various wet PM-10 control techniques evaluated for the plywood model plants.

4.4 GENERATION OF SOLID WASTE

Using dry emission control techniques to control PM-10 emissions (such as multiclones, fabric filters, dry ESP's, and EFB's) generates solid waste. The solid waste streams are made up of the PM-10 emissions that have been captured by these emission control devices. The rate of PM-10 emissions collected in each dry emission control device, therefore, represents the rate of generation of solid waste from each of these emission control devices. Rates of PM-10 emission collection from all source operations (for dry techniques) are contained in Tables 4-8 through 4-10. Assuming that each PM-10 emission source considered in this analysis will be equipped with an add-on emission control device, Tables 4-8 through 4-10 contain summaries of solid waste stream generation rates from each model plant. Because the control efficiency is the same for each control device controlling veneer dryers, the solid waste generation rate is also the same. For the wood waste-fired boiler, the solid waste generation rates are expressed as a range, as appropriate, since the potentially applicable control devices have varying reduction efficiencies. The lower limit for each source corresponds to the installation of the least stringent emission control alternative, and the upper limit corresponds to the installation of the most stringent PM-10 emission control technique. All PM collected at plywood facilities (with the exception of that collected from boilers) using both dry and wet collection techniques is burned in the veneer dryer or in the wood waste-fired boiler. The PM collected

TABLE 4-5. ESTIMATED WATER BLOWDOWN RATES ASSOCIATED WITH WET PM-10 EMISSION CONTROL TECHNIQUES AT THE SMALL MODEL PLANT[a]

Source type	Ionizing wet scrubber gal/yr	Plate-type wet ESP, gal/yr[b,c]	Tube-type wet ESP, gal/yr[b,c]	Venturi scrubber, gal/yr[d]
Veneer dryer	1,512,000	75,600	75,600	
Boiler			226,800	1,108,800

[a]The blowdown water is treated and recycled back to the wet PM-10 emission control device.
[b]Blowdown rates for plate-type and tube-type wet ESP's were estimated based on the guidance provided by a vendor (Reference 1). The blowdown rate for the ionizing wet scrubber was also estimated based on vendor-supplied data (Reference 3).
[c]Both plate-type and tube-type wet ESP's are estimated to have identical water requirements.
[d]Blowdown rate for the venturi scrubber was estimated based on guidance provided by a vendor (Reference 2).

TABLE 4-6. ESTIMATED WATER BLOWDOWN RATES ASSOCIATED WITH WET PM-10 EMISSION CONTROL TECHNIQUES AT THE MEDIUM MODEL PLANT[a]

Source type	Ionizing wet scrubber, gal/yr	Plate-type wet ESP, gal/yr[b c]	Tube-type wet ESP, gal/yr[b c]	Venturi scrubber, gal/yr[d]
Veneer dryer	5,040,000	226,800	226,800	
Boiler			739,200	3,679,200

[a]The blowdown water is treated and recycled back to the wet PM-10 emission control device.
[b]Blowdown rates for plate-type and tube-type wet ESP's were estimated based on the guidance provided by a vendor (Reference 1). The blowdown rate for the ionizing wet scrubber was also estimated based on vendor-supplied data (Reference 4).
[c]Both plate-type and tube-type wet ESP's are estimated to have identical water requirements.
[d]Blowdown rate for the venturi scrubber was estimated based on guidance provided by a vendor (Reference 2).

TABLE 4-7. ESTIMATED WATER BLOWDOWN RATES ASSOCIATED WITH WET PM-10 EMISSION CONTROL TECHNIQUES AT THE LARGE MODEL PLANT[a]

Source type	Ionizing wet scrubber, gal/yr[b]	Plate-type wet ESP, gal/yr[b,c]	Tube-type wet ESP, gal/yr[b,c]	Venturi scrubber, gal/yr[d]
Veneer dryer	9,072,000	453,600	453,600	
Boiler			1,470,000	7,350,000

[a]The blowdown water is treated and recycled back to the wet PM-10 emission control device.
[b]Blowdown rates for plate-type and tube-type wet ESP's were estimated based on the guidance provided by a vendor (Reference 1). The blowdown rate for the ionizing wet scrubber was also estimated based on vendor-supplied data (Reference 5).
[c]Both plate-type and tube-type wet ESP's are estimated to have identical water requirements.
[d]Blowdown rate for the venturi scrubber was estimated based on guidance provided by a vendor (Reference 2).

TABLE 4-8. ESTIMATED SOLID WASTE GENERATION RATES AT THE SMALL MODEL PLANT[a]

Source type	Solid waste generation rate, tons/yr
Veneer dryer[b]	21
Boiler[b]	88 - 92

[a]To be conservative, it is assumed that the boiler is not already equipped with a multiclone.
[b]It is assumed that all PM-10 collected from the veneer dryer will be burned in the wood waste-fired boiler onsite. The PM recovered from the boiler is chiefly composed of flyash, which is not suitable for burning. Therefore, it is assumed that the PM collected from the boiler is disposed of in a landfill.

TABLE 4-9. ESTIMATED SOLID WASTE GENERATION RATES AT THE MEDIUM MODEL PLANT[a]

Source type	Solid waste generation rate, tons/yr
Veneer dryer[b]	64
Boiler[b]	293 - 305

[a]To be conservative, it is assumed that the boiler is not already equipped with a multiclone.
[b]It is assumed that all PM-10 collected from the veneer dryer will be burned in the wood waste-fired boiler onsite. The PM recovered from the boiler is chiefly composed of flyash, which is not suitable for burning. Therefore, it is assumed that the PM collected from the boiler is disposed of in a landfill.

TABLE 4-10. ESTIMATED SOLID WASTE GENERATION RATES AT THE LARGE MODEL PLANT[a]

Source type	Solid waste generation rate, tons/yr
Veneer dryer[b]	124
Boiler[b]	581 - 606

[a]To be conservative, it is assumed that the boiler is not already equipped with a multiclone.
[b]It is assumed that all PM-10 collected from the veneer dryer will be burned in the wood waste-fired boiler onsite. The PM recovered from the boiler is chiefly composed of flyash, which is not suitable for burning. Therefore, it is assumed that the PM collected from the boiler is disposed of in a landfill.

from a boiler is chiefly composed of flyash, which is not suitable for burning. Therefore, it would have to be disposed of in a landfill.

4.5 ENERGY IMPACTS

Operating add-on PM-10 emission control devices requires auxiliary power to compensate for the pressure drop across the emission control device. Tables 4-11 through 4-13 contain a summary of the estimated annual energy requirements to operate various PM-10 emission control devices for all emission sources considered in this analysis for small, medium, and large model plants, respectively. Some emission control alternatives, while achieving the same emission reduction, can be more energy efficient. Assuming that each PM-10 emission source considered in this analysis is equipped with an add-on emission control device, the energy requirement for the model plants is estimated to fall in the following ranges:

Small plant:	260,400 - ~~1,057,355~~1,848,000	kWh
Medium plant:	898,236 - ~~1,907,044~~2,646,000	kWh
Large plant:	1,741,282 - ~~3,302,444~~4,116,000	kWh

The energy consumption data (derived from Tables 4-11 through 4-13) are expressed above as a range because the potentially applicable control devices have varying energy requirements.

The energy requirement to produce 1,000 ft^2 plywood is estimated to be between 200 and 450 kWh.[~~11~~12] Using the upper end of the range given above and the capacities of the three model plants, the total energy requirements at the small, medium, and large model plants are estimated to be 2.25×10^7, 6.75×10^7, and 13.5×10^7 kWh, respectively. The energy requirements to operate PM-10 emission control devices at the small, medium, and large model plants range between 1.2 and ~~4.7~~8.2 percent of the total energy requirements at these plants, respectively.

TABLE 4-11. ENERGY REQUIREMENTS ASSOCIATED WITH PM-10 EMISSION CONTROL TECHNIQUES AT THE SMALL MODEL PLANT

Source type	Fabric filter, kWh[a]	Dry ESP, kWh[a]	Plate-type wet ESP, kWh[b c]	Tube-type wet ESP, kWh[b c]	Electrified filter bed, kWh[a]	Ionizing wet scrubber, kWh[d]	Venturi scrubber, kWh[e]
Veneer dryer			798,000	798,000	210,000	300,787	
Boiler	162,516	50,400		1,050,000	259,355		232,165

[a]Electricity requirements for the fabric filter was estimated based on the procedure given in EPA's OAQPS Control Cost Manual (Reference 6). Electricity requirements for EFB's were estimated based on vendor-supplied data (Reference 7). Electricity requirements for the dry ESP for the small model plant were estimated based on vendor-supplied data (Reference 8).

[b]In the case of the veneer dryer, Both plate-type and tube-type wet ESP's are assumed to have identical electricity requirements.

[c]Electricity requirements for plate-type and tube-type wet ESP's were estimated based on vendor-supplied data (Reference 9). In the case of the boiler, the electricity requirement for the tube-type wet ESP was assumed to be equal to that of the tube-type wet ESP used for controlling PM-10 emissions from the veneer dryer at the medium model plant.

[d]Electricity requirements for the ionizing wet scrubber were estimated based on vendor-supplied data (Reference 3).

[e]Electricity requirements for the venturi scrubber were estimated based on the procedure given in EPA's Control Technologies for Hazardous Air Pollutants (Reference 10).

TABLE 4-12. ENERGY REQUIREMENTS ASSOCIATED WITH PM-10 EMISSION CONTROL TECHNIQUES AT THE MEDIUM MODEL PLANT

Source type	Fabric filter, kWh[a]	Dry ESP, kWh[a]	Plate-type wet ESP, kWh[b c]	Tube-type wet ESP, kWh[b c]	Electrified filter bed, kWh[a]	Ionizing wet scrubber, kWh[d]	Venturi scrubber, kWh[e]
Veneer dryer			1,050,000	1,050,000	361,200	764,501	
Boiler	537,036	537,036		1,596,000	857,044		767,194

[a]Electricity requirements for fabric filters and dry ESP's were estimated based on the procedure given in EPA's OAQPS Control Cost Manual (Reference 6). Electricity requirements for EFB's were estimated based on vendor-supplied data (Reference 7).

[b]In the case of the veneer dryer, both plate-type and tube-type wet ESP's are assumed to have identical electricity requirements.

[c]Electricity requirements for plate-type and tube-type wet ESP's were estimated based on vendor-supplied data (Reference 9). In the case of the boiler, the electricity requirement for the tube-type wet ESP was assuming to be equal to that of the tube-type wet ESP used for controlling PM-10 emissions from the veneer dryer at the large model plant.

[d]Electricity requirements for the ionizing wet scrubber were estimated based on vendor-supplied data (Reference 4).

[e]Electricity requirements for the venturi scrubber were estimated based on the procedure given in EPA's Control Technologies for Hazardous Air Pollutants (Reference 10).

TABLE 4-13. ENERGY REQUIREMENTS ASSOCIATED WITH PM-10 EMISSION CONTROL TECHNIQUES AT THE LARGE MODEL PLANT

Source type	Fabric filter, kWh[a]	Dry ESP, kWh[a]	Plate-type wet ESP, kWh[b c]	Tube-type wet ESP, kWh[b c]	Electrified filter bed, kWh[a]	Ionizing wet scrubber, kWh[d]	Venturi scrubber, kWh[e]
Veneer dryer			1,596,000	1,596,000	672,000	1,491,403	
Boiler	1,069,282	1,069,282		2,520,000	1,706,444		1,527,546

[a]Electricity requirements for fabric filters and dry ESP's were estimated based on the procedure given in EPA's OAQPS Control Cost Manual (Reference 6). Electricity requirements for EFB's were estimated based on vendor-supplied data (Reference 7).

[b]In the case of the veneer dryer, Both plate-type and tube-type wet ESP's are assumed to have identical electricity requirements.

[c]Electricity requirements for plate-type and tube-type wet ESP's were estimated based on vendor-supplied data (Reference 9). In the case of the boiler, the electricity requirement was assumed to be the same as that for a tube-type wet ESP at a large particleboard model plant (Reference 11).

[d]Electricity requirements for the ionizing wet scrubber were estimated based on vendor-supplied data (Reference 5).

[e]Electricity requirements for the venturi scrubber were estimated based on the procedure given in EPA's Control Technologies for Hazardous Air Pollutants (Reference 10).

4.6 REFERENCES FOR CHAPTER 4

1. Telecon. Kalagnanam, R.S., MRI, with Raemhild, G.A., Geoenergy International Corporation, Kent, WA. August 6, 1992. Blowdown practices for tube-type wet ESP's.

2. Telecon. Kalagnanam, R.S., MRI, with Borenstein, M., Air Pol, Inc., Teterboro, NJ. June 30, 1992. Blowdown practices for venturi scrubbers.

3. Letter from Sheppard, S.V., Ceilcote/Air Pollution Control, to Hayes, R.T., MRI. April 6, 1992. Ionizing wet scrubber cost quotations for small-sized model plant.

4. Letter from Sheppard, S.V., Ceilcote/Air Pollution Control, to Hayes, R.T., MRI. February 10, 1992. Ionizing wet scrubber cost quotations for medium-sized model plant.

5. Letter from Sheppard, S.V., Ceilcote/Air Pollution Control, to Hayes, R.T., MRI. February 10, 1992. Ionizing wet scrubber cost quotations for large-sized model plant.

6. OAQPS Control Cost Manual. U.S. Environmental Protection Agency, Research Triangle Park, NC. Publication No. EPA 450/3-90-006. January 1990. pp. 5-42.

7. Letter from Alexander, J.C., EGB Filter, Inc., to Hayes, R.T., MRI. January 22, 1992. Electrified filter bed cost quotation.

8. Telecon. Kalagnanam, R.S., MRI, with Kohl, R., Environmental Elements Corp., Baltimore, MD. August 26, 1992. Dry ESP cost quotations.

9. Letter from Raemhild, G.A., Geoenergy International Corporation, to Gupta, R., MRI. December 4, 1991. Tube-type wet ESP cost quotations.

10. Handbook, Control Technologies for Hazardous Air Pollutants. U.S. Environmental Protection Agency. Cincinnati, OH. Publication No. EPA 625/6-91-014. June 1991. p. 4-96.

11. Midwest Research Institute. Alternative Control Technology Document - PM-10 Emission from the Wood Products Industry: Particleboard, Oriented Strandboard, and Waferboard Manufacturing, Draft. Prepared for U. S. Environmental Protection Agency. Research Triangle Park, NC. September 1992. p. 4-20.

~~11~~12. Telecon. Kalagnanam, R.S., MRI, with Sangesand, D., Weyerhaeuser, Inc., Tacoma, WA. August 25, 1992. Energy requirements for plywood production.

5.0 CONTROL COST ANALYSIS

5.1 INTRODUCTION

This chapter presents cost estimates for installing PM-10 control devices described in Chapter 3 at each model plant for each level of control. The cost effectiveness of each level of control is determined on the Total Annual Cost (TAC) per ton of PM-10 emission reduction basis when compared to the uncontrolled plant of the same size.

Operations resulting in PM-10 emissions for which add-on control systems have been determined to be technically feasible (see Chapter 3) are:

1. Veneer dryers; and
2. Wood waste fired boilers.

Cost evaluation has been performed for the following PM-10 emission control alternatives:

<u>Veneer dryer</u>

1. Ionizing wet scrubber;
2. Wet electrostatic precipitator (plate-type and tube-type); and
3. Electrified filter bed.

<u>Wood-waste fired boiler</u>

1. Fabric filter;
2. ~~Dry~~Electrostatic precipitator;
3. Electrified filter bed; ~~and~~
4. Tube-type wet ESP; and
~~4~~5. Venturi scrubber.

Section 5.2 describes the cost evaluation methodology used to estimate capital costs, total annual costs, and cost effectiveness of the various PM-10 control alternatives. Results

of the cost analysis for the PM-10 control alternatives for veneer dryers are presented in Section 5.3. Section 5.4 contains the results of the cost analysis of the PM-10 control alternatives for the wood waste-fired boilers. Finally, Section 5.5 lists the references cited in this chapter.

5.2 COST EVALUATION METHODOLOGY

The cost analysis methodology consisted of a two-part procedure involving the estimation of total capital costs and annual operating costs. A description of the capital cost and annual operating cost estimation procedures used for this analysis is presented below.

5.2.1 Capital Cost Estimation

The capital cost estimation approach used in this analysis is consistent with that presented in the EPA OAQPS Control Cost Manual and Control Technologies for Hazardous Air Pollutants.[1,2] A reliable estimate of the total purchased cost was calculated or a quote was obtained from a vendor and predetermined factors (given in the reports referenced above) were applied to determine all other capital cost elements of the emission control device. Methods used to estimate total purchased equipment costs and other direct and indirect capital costs for fabric filters and dry electrostatic precipitators (ESP's) are provided in EPA's OAQPS Control Cost Manual.[1] The EPA document Control Technologies for Hazardous Air Pollutants contains methods to estimate total purchased equipment costs and other direct and indirect capital costs for venturi scrubbers.[2]

The capital costs of fabric filters and ESP's are reported in Third Quarter 1986 dollars and Second Quarter 1987 dollars, respectively.[1] Capital costs of venturi scrubbers are given in first quarter 1990 dollars.[3] A compilation of monthly chemical engineering equipment cost indices given in Chemical Engineering, collected and supplied by EPA, were used to convert the costs to First Quarter 1991 dollars. Chemical Engineering cost indices are reported for each month. To convert the costs from Third Quarter 1986 dollars to First Quarter 1991 dollars, the ratio of the arithmetic average of the cost indices for January, February,

and March 1991 to the arithmetic average of the cost indices for July, August, and September 1986, was used. The average of the cost indices for January, February, and March 1991 is 396. The average of the cost indices for July, August, and September 1986 is 335.3. The ratio of the two averages is 1.18 (396/335.3). Therefore, a factor of 1.18 was used to convert the costs from Third Quarter 1986 dollars to First Quarter 1991. Similarly, a factor of 1.16 was used to convert Second Quarter 1987 dollars to First Quarter 1991 dollars. Finally, a conversion factor of 1.02 was used to convert First Quarter 1990 dollars to First Quarter 1991 dollars.

Vendor quotations, on the other hand, represent current dollars (First Quarter 1992). These quotations were used without any adjustments.

As shown in Table 5-1, the total capital investment for cost evaluation purposes is the sum of the total purchased equipment costs, the total direct installation costs, the total indirect installation costs, and contingency costs. Purchased equipment costs represent the estimated delivered cost of the emission control device, auxiliary equipment, instrumentation, structural support, freight, and taxes. Auxiliary equipment consists of all structural, mechanical, and electrical components required for efficient operation of the device. These include interconnecting ductwork, fans, stacks, tanks, pumps, piping, and motors. Auxiliary equipment costs are not always included in the basic equipment quotes from the vendors. The costs of instrumentation, structural support, and freight are then calculated as a fraction of the basic equipment and auxiliaries cost.

Each component of the direct and indirect installation costs is calculated as a fraction of the total purchased equipment cost. Installation costs consist of the direct expenditures for materials and labor for foundation and supports, erection and handling, piping, electrical, painting, insulation, and site preparation and the indirect costs for contractors' engineering and supervision, construction and field expenses, construction fees, contingencies, and startup and performance costs. These

TABLE 5-1. CAPITAL COST FACTORS FOR PARTICULATE MATTER (PM-10) EMISSION CONTROL DEVICES

Cost elements	Fabric filter[a]	ESP[a]	Venturi scrubber[b]	EFB[c]	Ionizing wet scrubber[d]	Multiclone[e]
Direct costs:						
Purchased equipment costs:						
Control device and aux. equipment	A	A	A	A	A	A
Instrumentation	0.10A	0.01A	Included	0.10A	0.01A	Included
Sales taxes	0.03A	0.03A	0.03A	0.03A	0.03A	0.03A
Freight	0.05A	0.05A	0.05A	0.05A	0.05A	0.05A
Total purchased equipment costs (PEC)	B=1.18A	B=1.18A	B=1.08A	B=1.18A	B=1.18A	B=1.08A
Direct installation costs:						
Foundation and supports	0.04B	0.04B	0.06B	0.04B	0.04B	0.06B
Handling and erection	0.50B	0.05B	0.40B	0.50B	0.05B	0.40B
Electrical	0.08B	0.08B	0.01B	0.08B	0.08B	0.01B
Piping	0.01B	0.01B	0.05B	0.01B	0.01B	0.05B
Insulation for ductwork	0.07B	0.02B	0.03B	0.07B	0.02B	0.03B
Painting	0.06B	0.06B	0.01B	0.06B	0.06B	0.01B
Total direct installation costs:	0.72B	0.67B	0.56B	0.72B	0.67B	0.56B
Site preparation (S)	----- As required -----					
Buildings (G)	------ As required ----					
Total direct cost (DC)	1.72B+S+G	1.67B+S+G	1.56B+S+G	1.72B+S+G	1.67B+S+G	1.56B+S+G
Indirect costs (installation)						
Engineering	0.01B	0.20B	0.10B	0.01B	0.20B	0.10B
Construction & field expense	0.20B	0.20B	0.10B	0.20B	0.20B	0.10B
Contractor fees	0.10B	0.10B	0.10B	0.10B	0.10B	0.10B
Startup	0.01B	0.01B	0.01B	0.01B	0.01B	0.01B
Performance test	0.01B	0.01B	0.01B	0.01B	0.01B	0.01B
Model Study	--	0.02B	--	--	0.02B	--
Contingencies	0.03B	0.03B	0.03B	0.03B	0.03B	0.03B
Total indirect cost (IC)	0.45B	0.57B	0.35B	0.45B	0.57B	0.35B
TOTAL CAPITAL INVESTMENT = DC + IC						

[a]Reference 1; Tables 5.8 and 6.9.
[b]Reference 2.
[c]It is assumed that the capital cost elements for EFB's are the same as those for fabric filters.
[d]It is assumed that the capital cost elements for ionizing wet scrubbers are the same as those for ESP's.
[e]Since no data are available for multiclones, the factors given for venturi scrubbers were used. The validity of this procedure was not verifiable.

installation costs are expressed as a function of the total purchased equipment cost. The factors were based on the assumption that the installation is performed by an outside contractor and not by plant personnel.

Contingencies include unforeseen costs that may arise due to possible redesign and modification of equipment, increases in the cost of equipment, increases in field labor costs, and delays encountered in startup.[4]

During this evaluation, the purchased equipment cost was determined using the procedures given in the EPA documents referenced above for fabric filters, dry ESP's, and venturi scrubbers.[1,2] For the small model plant, the purchased equipment cost of the dry ESP was estimated based on vendor-supplied data.[5] For wet ESP's, ionizing wet scrubbers, electrified filter beds (EFB's), and multiclones, vendor quotations were obtained for the purchased equipment costs.[6-13] Upon determining the total purchased equipment cost, factors given in Table 5-1 were used to estimate all other capital cost components. For EFB's, the factors for fabric filters given in Table 5-1 were used since no other data were available. The validity of using these factors was verified during a telephone conversation with Mr. William Vatavuk of EPA's Office of Air Quality Planning and Standards.[14] For multiclones, the factors for venturi scrubbers given in Table 5-1 were used since no other data were available.

Purchased equipment costs were obtained for wet ESP's, EFB's, ionizing wet scrubbers, and multiclones. A retrofit cost factor of 1.4 (suggested range is 1.3 to 1.5) has been applied to the total capital cost as suggested in EPA's <u>OAQPS Control Cost Manual</u>.[15]

5.2.2 Annual Costs

Annual costs are developed using vendors' estimates and operating data in the literature. As shown in Table 5-2, total annual costs are composed of the direct operating costs of materials and labor for maintenance, operation, utilities, material replacement (e.g., bag replacement in fabric filters),

TABLE 5-2. ANNUAL COST ELEMENTS AND FACTORS[a]

Direct annual costs (DC)	
1. Utilities:1 Water Electricity Compressed air	 $0.25/1000 gallons $0.06/kWh $0.16/1000 scfm
2. Operating labor[b] Operator labor Supervising labor Coordinator	 $14.16/hr 15% of operator labor 33% of operator labor
3. Maintenance[c] Labor Materials	 $15.58/hr As applicable
4. Replacement[d]	As applicable
5. Waste treatment/disposal[e]	As applicable
Indirect annual costs (IC)	
Overhead	60% of sum of operating, supervising maintenance labor, and maintenance materials
Administrative charges	2% of total capital investment
Property tax	1% of total capital investment
Insurance	1% of total capital investment
Capital recovery[f]	CRF x total capital investment
TOTAL ANNUAL COST	DC + IC

[a]References 1 and 2.
[b]See Table 5-3 for estimated operator hours. Coordinator time applies only to ESP's.
[c]See Table 5-3 for estimated maintenance hours for fabric filters and venturi scrubbers. For EFB's, the same maintenance requirements as for fabric filters are assumed to apply. The cost of maintenance materials is assumed to be equal to the maintenance labor cost for fabric filters, EFB's, and venturi scrubbers. For ESP's, these are functions of purchased equipment cost.
[d]Bag replacement applies for fabric filters.
[e]In this analysis, it is assumed that the PM recovered from the veneer dryer will be mixed with the hogged fuel and burned in the wood waste-fired boiler. Waste disposal is required only in the case of PM recovered from boilers since fly ash is not suitable for combustion. The PM recovered from the boilers needs to be disposed of in a landfill. The landfill was assumed to be located at a distance of 100 miles from the model plant. A tipping fee of $20/ton and a transportation fee of $0.50/ton/mile were used in this analysis. To estimate the cost of treatment of blowdown water for wet ESP's and venturi scrubbers, a treatment cost of $2.15/1,000 gallons was used.
[f]Capital recovery factor (CRF) is calculated using the formula given in Section 5.2.2. Interest rate is assumed to be 10 percent. The equipment life data for various emission control devices are contained in Table 5-3.

and waste disposal and the indirect operating charges, including plant overhead, general administration, and capital charges.

Labor and material costs for operation, supervision, and maintenance vary depending on the system type, degree of system automation, and operating time. Operating labor is generally reduced with increased system automation. The maintenance costs of well-designed and -maintained control equipment are low. Estimated operator and maintenance labor hours are presented in Table 5-3.

Utility costs for the emission control device and auxiliary equipment are based on total annual consumption, unit costs, and vendor estimates.

Indirect operating costs include the cost of plant overhead, general administration (G&A), and capital charges. General administration cost, as shown in Table 5-2, is a direct function of the total capital investment. Overhead is a function of labor. The capital recovery cost, or capital charge, is based on the operational life of the system, capital depreciation rates, and total capital investment. These charges are based on the capital recovery factor (CRF) defined as:

$$CRF = \frac{i(1 + i)^n}{(i + 1)^n - 1}$$

where: i is the annual interest rate (expressed as a fraction), and
n is the equipment life (years).

Based on these cost estimating procedures, capital and annual costs have been estimated for each PM-10 control alternative evaluated. It is important to recognize that the costs presented are provided for comparative purposes only.

A brief description is provided below for each component of the annual operating costs for all the emission control technologies considered in this evaluation.

TABLE 5-3. ESTIMATED LABOR HOURS PER SHIFT AND AVERAGE EQUIPMENT LIFE

Control device	Operator labor	Maintenance labor	Average equipment life, years
Fabric filter	4	3	20
ESP	1	a	20
Venturi scrubber	2	1	10
EFB	4	3	20
Ionizing wet scrubber	1	a	20

Source: References 1, 2.

[a]Maintenance labor costs are a function of collection area and purchased equipment cost. Maintenance labor for dry ESP's is a function of plate area, as described in Section 5.2.2.3. Maintenance labor for tube-type wet ESP's was supplied by a vendor, and the requirements are 4, 8, and 16 hrs per week for small, medium, and large model plants, respectively (Reference 6). It is assumed that the maintenance labor requirements for plate-type wet ESP's and ionizing wet scrubbers will be the same as those for tube-type ESP's.

5.2.2.1 Utilities. Utility requirements to operate emission control devices consist of:

1. Electricity;
2. Water; and
3. Compressed air.

Electric power is required to operate all emission control devices, and, for wet collection methods, water is also required. The electric power requirement is estimated for fabric filters, dry ESP's, and venturi scrubbers using the methods given in EPA's, OAQPS Control Cost Manual, and Control Technologies for Hazardous Air Pollutants.[16,17] Electricity requirements were assumed to be the same for both types of wet ESP's. Electric power requirements for wet ESP's, EFB's, and ionizing wet scrubbers were estimated based on vendor-supplied data.[5,7,9-12]

Water use for venturi scrubbers was estimated using the procedures given in EPA's Control Technologies for Hazardous Air Pollutants.[18] Makeup water requirements for tube-type wet ESP's and ionizing wet scrubbers were given by vendors.[6,10-12] Water requirements for the plate-type and tube-type wet ESP's were assumed to be the same.

Compressed air is required to shake the bags in the fabric filter. The EPA OAQPS Control Cost Manual estimates that 2 standard cubic feet per minute (scfm) of air would be required for every 1,000 acfm of exhaust gases.[19] Standard conditions refer to 70°F and atmospheric pressure. The requirement of compressed air is estimated for all fabric filters based on this guideline.

5.2.2.2 Operating Labor. Operating labor consists of operator labor and supervisory labor requirements. Table 5-3 contains operator labor requirements to operate fabric filters, ESP's, EFB's, ionized wet scrubbers, and venturi scrubbers. These labor requirements are expressed as operator hours per shift. For this analysis, it was assumed that each model plant operates three 8-hour shifts per day. For EFB's, the operator labor requirement corresponding to the fabric filter was used since no other data were available. The validity of using this

method was verified during a telephone conversation with Mr. William Vatavuk of EPA's Office of Air Quality Planning and Standards.[13]

For fabric filters and ESP's, EPA's OAQPS Control Cost Manual indicates that the supervisory labor requirement is 15 percent of the operator labor requirement.[20] This approach was also followed for EFB's and ionizing wet scrubbers.

The OAQPS Control Cost Manual indicates that to operate ESP's, an additional labor requirement referred to as "coordinator time" is required.[21] Further, this document estimates the cost of coordinator labor to be one-third of the operator labor cost. The cost of coordinator time was included in the cost evaluation of all ESP's and ionizing wet scrubbers. For ESP's and ionizing wet scrubbers, both supervisory labor cost and coordinator labor cost have been added together and reported as supervisory labor cost in the cost tables in the latter part of this chapter.

A labor rate of $14.16 per hour was used to estimate the operator labor cost. This rate represents a mark-up of 18 percent over the rate of $12 per hour given in the OAQPS Control Cost Manual.[22] The markup was provided to account for increased cost-of-living expenses and to balance the wage rates across the United States.

5.2.2.3 Maintenance Labor and Materials. Table 5-3 contains the maintenance labor requirements to maintain fabric filters and venturi scrubbers expressed as maintenance hours per shift.[18,23] For this analysis, it was assumed that each model plant operates three 8-hour shifts per day. To be conservative, the upper limit of the range reported for maintenance labor requirements given in Table 5-3 was used for each fabric filter and venturi scrubber. For EFB's, the maintenance labor requirement corresponding to the fabric filter was used since no other data were available. For dry ESP's, the maintenance labor

requirement depends on the collection area and purchased equipment cost, as follows:[24]

$$\text{labor cost} = \$4{,}125 \text{ for ESP plate area (A)} < 50{,}000\ ft^2$$
$$= 0.0825A \text{ if } A>50{,}000\ ft^2$$

Maintenance labor requirements for wet ESP's and ionizing wet scrubbers were provided by the vendor. Further, the maintenance labor requirements for both types of wet ESP's were assumed to be the same.

The OAQPS Control Cost Manual and Control Technologies for Hazardous Air Pollutants indicate that the cost of maintenance materials is equal to the cost of maintenance labor for fabric filters and venturi scrubbers.[18,23] This approach was also followed for EFB's and ionizing wet scrubbers. For dry ESP's, the OAQPS Control Cost Manual suggests that the maintenance materials cost will be approximately 1 percent of total purchased equipment cost.[24] This approach was used for all ESP's.

A labor rate of $15.58 per hour was used to estimate the maintenance labor cost. This rate also represents a mark-up of 18 percent over the rate of $13.20 given in the OAQPS Control Cost Manual.[22]

5.2.2.4 Replacement. Replacement costs apply for fabric filters. An annual cost of bag replacement is included in the cost evaluation for fabric filters.

For fabric filters, the following method was used to estimate the annual cost of bag replacement:[23]

$$CRC_B = (C_B + C_L) x CRF_B$$

where:

CRC_B = bag capital recovery cost, $/yr;
C_B = initial bag cost including taxes and freight, $;
C_L = bag replacement labor; and
CRF_B = bag capital recovery factor.

The bag capital recovery factor is a function of annual interest rate and useful life of the bags. For this analysis, the annual interest rate was assumed to be 10 percent and the useful life of bags was assumed to be 2 years, resulting in a bag capital recovery factor of 0.5762. The cost of the bags, C_B, is

estimated for each fabric filter per the procedure described in the OAQPS Control Cost Manual.[25] This cost differs for each model plant and application. Bag replacement labor was assumed to be 20 man-minutes per bag.

5.2.2.5 Waste Disposal. Employing PM-10 control techniques can potentially generate waste streams. Solid waste generation rates for small, medium, and large model plants are presented in Chapter 4. The standard practice within plywood plants consists of combusting in the boiler the PM-10 collected in the emission control devices controlling the veneer dryer. During this analysis, therefore, it was assumed that PM recovered from fabric filters, venturi scrubbers, dry ESP's, wet ESP's, and EFB's would be burned in the boiler onsite. Therefore, waste disposal costs were not included in the cost evaluation of the above mentioned PM-10 control devices. However, costs for landfilling the flyash collected in the control devices controlling the wood waste-fired boiler were developed. The landfill was assumed to be located approximately 100 miles from the model facility. A tipping fee of $20/ton and a transportation fee of $0.50/ton/mile was used to estimate the cost of solid waste disposal as given in the OAQPS Control Cost Manual.[26]

Using wet techniques, on the other hand, can potentially generate a liquid waste stream. However, plywood facilities are classified as zero-discharge facilities under the requirements of the Clean Water Act. Therefore, at plywood facilities, the scrubber water as well as the blowdown water is treated and recycled to the process. A treatment cost of $2.15/ 1,000 gallons, as given in EPA's Control Technologies for Hazardous Air Pollutants, is used to estimate the cost of scrubber water treatment.[27]

5.2.3 Estimation of Control Device Cost Effectiveness

Control device cost effectiveness is defined as the annual cost (sum of the annual operating costs and capital recovery cost) divided by the total PM-10 emission reduction achieved by that device. Cost effectiveness provides a means with which to

compare both costs and emissions reductions for the range of alternative air pollution control devices evaluated.

5.3 VENEER DRYER

In this section, the cost of PM-10 control for each technically feasible control technology as applied to veneer dryers is evaluated for the small, medium, and large model plywood plants. Table 5-4 contains the operating parameters for dryers in each of the three model plants. Three technically feasible add-on emission control options identified for controlling PM-10 emissions from a veneer dryer are:

1. Ionizing wet scrubber;
2. Wet ESP; and
3. Electrified filter bed.

These are direct, add-on-type control systems, which do not require significant equipment modifications at the facility. Cost-effectiveness data for each of these options are summarized below.

5.3.1 Ionizing Wet Scrubbers

The cost of control using the ionizing wet scrubber was estimated based on cost estimates provided by a vendor.[10-12] The retrofit factor of 1.4 described in Section 5.2.1 was applied to the purchased equipment cost quoted by the vendor. Factors for direct installation costs and other indirect costs given for fabric filters in Table 5-1 were used to estimate the total capital cost of the ionizing wet scrubber.

All annual operating costs with the exception of electricity were estimated using the factors given in Table 5-2 for ionizing wet scrubbers. The electricity cost was estimated based on vendor supplied data. Tables 5-5 through 5-7 contain the results of the cost evaluation of ionizing wet scrubbers for the three model plywood plants.

5.3.2 Wet ESP

There are two types of wet ESP's, as follows:

1. Plate-type collector; and
2. Tube-type collector.

TABLE 5-4. MODEL PLANT OPERATING DATA FOR VENEER DRYERS

Parameter	Small plant	Medium plant	Large plant
No. of dryers	1	3	5
Total airflow, acfm	14,220	42,660	85,315
Temperature of gases, °C (°F)	110 (230)	110 (230)	110 (230)
Total PM-10 emission rate, lb/hr	6.2	19	37
Operating schedule:			
No. shifts/day	3	3	3
No. hours/shift	8	8	8
No. hours/year	8,400	8,400	8,400

TABLE 5-5. CAPITAL COST OF EMISSION CONTROL ALTERNATIVES FOR VENEER DRYER PM-10 EMISSION CONTROL[a]

Cost element	Ionizing wet scrubber			Plate-type wet ESP[b]			Tube-type wet ESP[b]			Electrified filter bed		
	Small	Medium	Large	Small	Medium	Large	Small	Medium	Large	Small	Medium	Large
Purchased equipment cost	414	699	1,150	805	1,050	1,400	332	738	1,277	249	331	560
Direct installation cost	278	468	770	539	703	938	223	494	855	180	238	403
Other indirect cost	236	398	655	459	599	798	188	421	728	112	149	252
Total capital cost	928	1,565	2,575	1,803	2,352	3,136	743	1,653	2,860	541	718	1,215

[a]All costs are reported in thousands of dollars.
[b]Cost of the water treatment systems for the plate-type wet ESP is included in the capital cost and was supplied by the vendor (Reference 7). Cost of the water treatment systems for a tube-type wet ESP was obtained during a telephone conversation with the vendor (Reference 28).

TABLE 5-6. ANNUAL OPERATING COST OF EMISSION CONTROL ALTERNATIVES FOR VENEER DRYER PM-10 EMISSION CONTROL[a]

Cost element	Ionizing wet scrubbers			Plate-type wet ESP			Tube-type wet ESP			Electrified filter bed		
	Small	Medium	Large	Small	Medium	Large	Small	Medium	Large	Small	Medium	Large
Direct operating costs												
Utilities												
Electricity	18	46	89	48	63	96	48	63	96	13	22	40
Water	1	3	5	1	1	3	1	1	3	N/A	N/A	N/A
Operating labor												
Operator labor	16	16	16	16	16	16	16	16	16	62	62	62
Supervision labor	7	7	7	7	7	7	7	7	7	9	9	9
Maintenance												
Labor	3	7	13	3	6	13	3	6	13	34	34	34
Materials	4	7	12	8	11	14	4	7	12	34	34	34
Replacement	N/A	N/A	N/A	N/A	N/A	N/A	N/A	N/A	N/A	N/A	N/A	N/A
Blowdown Water treatment[b]	3	11	20	Neg.	Neg.	1	Neg.	1	1	N/A	N/A	N/A
Indirect operating costs												
Overhead	18	22	28	21	24	30	18	22	29	84	84	84
Property tax	9	15	26	18	24	31	7	17	29	5	7	12
Insurance	9	15	26	18	24	31	7	17	29	5	7	12
Administration	19	31	51	36	47	63	15	33	57	11	15	24
Capital recovery	109	184	303	212	276	368	87	194	336	64	84	144
TOTAL ANNUAL COST	216	364	596	388	499	673	213	384	628	321	358	455

N/A = not applicable
Neg. = negligible
[a]All costs are reported in thousands of dollars.
[b]Blowdown water requirements for tube-type wet ESP were estimated based on information obtained during a telephone conversation with the vendor (Reference 28). Blowdown water requirements for both plate and tube-type wet ESP's are assumed to be the same.

TABLE 5-7. COST EFFECTIVENESS OF EMISSION CONTROL ALTERNATIVES FOR VENEER DRYER PM-10 EMISSION CONTROL

	Ionizing wet scrubbers			Plate-type wet ESP			Tube-type wet ESP			Electrified filter bed		
	Small	Medium	Large	Small	Medium	Large	Small	Medium	Large	Small	Medium	Large
Total capital cost[a]	928	1,565	2,575	1,803	2,352	3,136	743	1,653	2,860	541	718	1,215
Total annual cost[a]	216	364	596	388	499	673	213	384	628	321	358	455
Amount of PM-10 controlled, tons/yr[b]	21	60	124	21	60	124	21	60	124	21	60	124
Cost effectiveness, ($/ton PM-10 controlled)[c]	10,286	6,067	4,806	18,476	8,317	5,427	10,143	6,400	5,065	15,286	5,967	3,669

[a]All costs are reported in thousands of dollars.
[b]See Chapter 4, Tables 4-2 through 4-4.
[c]The cost effectiveness has been derived by dividing the total annual cost by the amount of PM-10 controlled.

These systems represent two different designs, and the operating principles are described in Chapter 3. For completeness, both types of wet ESP's were evaluated, and control cost estimates for both systems are reported.

5.3.2.1 Plate-Type Wet ESP. The capital cost of control using the plate-type wet ESP was estimated based on cost estimates provided by a vendor.[7] The retrofit factor of 1.4 described in Section 5.2.1 was applied to the purchased equipment cost quoted by the vendor. Factors for direct installation costs and other indirect costs given for ESP's in Table 5-1 were used to estimate the total capital cost of the plate-type wet ESP.

All annual operating costs with the exception of electricity and water costs were estimated using the factors given in Table 5-2 for ESP's. Electricity and water costs were estimated based on vendor-supplied data. Tables 5-5 through 5-7 contain the results of the cost evaluation of plate-type wet ESP's for the three model plywood plants.

5.3.2.2 Tube-Type Wet ESP. The cost of control using the tube-type collector was estimated based on cost estimates provided by a vendor.[6] The retrofit factor of 1.4 described in Section 5.2.1 was applied to the purchased equipment cost quoted by the vendor. Factors for direct installation costs and other indirect costs given for ESP's in Table 5-1 were used to estimate the total capital cost of the tube-type wet ESP.

All annual operating costs with the exception of electricity and water costs were estimated using the factors given in Table 5-2 for ESP's. Electricity and water costs were estimated based on vendor supplied data. Tables 5-5 through 5-7 contain the results of the cost evaluation of tube-type wet ESP's for the three model plywood plants.

5.3.3 Electrified Filter Bed

The cost of control using the electrified filter bed was estimated based on cost estimates provided by a vendor.[8] The retrofit factor of 1.4 described in Section 5.2.1 was applied to the purchased equipment cost quoted by the vendor. Factors for

direct installation costs and other indirect costs given for fabric filters in Table 5-1 were used to estimate the total capital cost of the EFB.

All annual operating costs with the exception of electricity were estimated using the factors given in Table 5-2 for EFB's. The electricity cost was estimated based on vendor supplied data. Tables 5-5 through 5-7 contain the results of the cost evaluation of EFB for the three model plywood plants.

5.4 WOOD WASTE-FIRED BOILER

In this section, the cost of PM-10 control for each technically feasible control technology as applied to wood waste-fired boilers is evaluated for the small, medium, and large model plywood plants. Table 5-8 contains a summary of operating data pertaining to wood waste-fired boilers at each of the three model plants. ~~Four~~Five technically feasible add-on emission control options identified for controlling PM-10 emissions resulting from a boiler are:

1. Fabric filter;
2. Dry electrostatic precipitator (ESP);
3. Electrified filter bed; ~~and~~
4. Tube-type wet ESP; and
~~4~~5. Venturi scrubber.

These are direct, add-on-type control systems, which do not require significant equipment modifications at the facility. Cost-effectiveness data for each of these options are summarized below. For this analysis, it is assumed that all boilers are equipped with multiclones, and the emission control devices listed above would be used as add-on devices in addition to the multiclone.

5.4.1 Fabric Filter

The cost of controlling PM-10 emissions from boilers using a fabric filter was estimated according to the method described in the OAQPS Control Cost Manual.[29] Tables 5-9 through 5-11 contain the results of the cost evaluation of a fabric filter for each of the three model plants.

TABLE 5-8. MODEL PLANT OPERATING DATA FOR BOILERS

Parameter	Small plant	Medium plant	Large plant
No. of boilers	1	1	1
Fuel burned, tons/hr	3.42	11.3	22.5
Airflow, acfm/boiler	15,270	50,460	100,470
Temperature of gases, °C (°F)	232 (450)	232 (450)	232 (450)
Uncontrolled PM-10 emission rate, lb/hr/boiler[a]	22	73	146
Emission rate of PM-10 with multiclone system, lb/hr[b]	19	62	123
Operating schedule:			
No. shifts/day	3	3	3
No. hours/shift	8	8	8
No. hours/year	8,400	8,400	8,400

[a]For boilers equipped only with primary cyclone.
[b]For boilers equipped with primary cyclone and multiclone in series and where flyash is reinjected.

TABLE 5-9. CAPITAL COST OF EMISSION CONTROL ALTERNATIVES FOR WOOD WASTE-FIRED BOILER PM-10 EMISSION CONTROL[a]

Cost element	Fabric filter			Electrostatic precipitator			Tube-type wet ESP[c]			Venturi scrubber[cd]			Electrified filter bed		
	Small	Medium	Large	Small[b]	Medium	Large	Small	Medium	Large	Small	Medium	Large	Small	Medium	Large
Purchased equipment cost	321	692	1,104	454	631	972	738	1,277	1,817	88	206	345	147	277	507
Direct installation cost	231	498	795	304	423	651	494	855	1,217	49	115	193	106	200	365
Other indirect cost	145	312	497	259	360	554	421	728	1,035	31	72	121	66	125	228
Total capital cost[de]	697	1,502	2,396	1,017	1,414	2,177	1,653	2,860	4,069	168	393	659	319	602	1,100

[a]All costs are reported in thousands of dollars.

[b]The capital cost of ESP for the small model plant was estimated based on vendor-supplied data (Reference 5).

[c]The capital cost of tube-type wet ESP for the boiler at the small model plant is assumed to be equal to that of the tube-type wet ESP used for controlling PM-10 emissions from the veneer dryer at the medium plywood model plant. The capital cost of the tube-type wet ESP for the boiler at the medium model plant is assumed to be equal to that of the tube-tube wet ESP used for controlling PM-10 emissions from the veneer dryer at the large plywood model plant. The capital cost of the tube-type wet ESP for the boiler at the large model plant is assumed to be equal to that of the tube-type wet ESP used for controlling PM-10 emissions from the boiler at a large particleboard model plant. (Reference 31.)

[cd]The capital cost of venturi scrubber does not include the cost of the blowdown water treatment systems.

[de]This is the purchased equipment cost of PM-10 control equipment and auxiliaries assuming that the boiler is already equipped with a multiclone. If a multiclone is needed, add $32,00085,000, $96,000256,000, and $178,000477,000 to the total capital cost for small, medium, and large model plants, respectively.

TABLE 5-10. ANNUAL OPERATING COST OF EMISSION CONTROL ALTERNATIVES FOR WOOD WASTE-FIRED BOILER PM-10 EMISSION CONTROL[a]

Cost element	Fabric filter			Electrostatic precipitator			Tube-type wet ESP[c]			Venturi scrubber			Electrified filter bed		
	Small	Medium	Large	Small[b]	Medium	Large	Small	Medium	Large	Small	Medium	Large	Small	Medium	Large
Direct operating costs															
Utilities															
Electricity	10	32	64	3	32	64	63	96	151	14	46	92	16	51	102
Water	N/A	N/A	N/A	N/A	N/A	N/A	1	3	8	1	3	6	N/A	N/A	N/A
Compressed air	2	3	16	N/A	N/A	N/A	N/A	N/A	N/A	N/A	N/A	N/A	N/A	N/A	N/A
Operating labor															
Operator labor	62	62	62	16	16	16	16	16	16	31	31	31	62	62	62
Supervision labor	9	9	9	7	7	7	7	7	7	5	5	5	9	9	9
Maintenance															
Labor	34	34	34	5	5	5	6	13	13	17	17	17	34	34	34
Materials	34	34	34	5	6	10	7	13	18	17	17	17	34	34	34
Replacement	7	17	28	N/A	N/A	N/A	N/A	N/A	N/A	N/A	N/A	N/A	N/A	N/A	N/A
Blowdown water treatment[c,d]	N/A	N/A	N/A	N/A	N/A	N/A	1	2	3	2	8	16	N/A	N/A	N/A
Waste disposal	6	22	43	6	22	43	6	21	43	6	20	41	6	20	41
Indirect operating costs															
Overhead	84	84	84	19	20	22	22	29	32	42	42	42	84	84	84
Property tax	7	15	24	10	14	22	17	29	41	2	4	7	3	6	11
Insurance	7	15	24	10	14	22	17	29	41	2	4	7	3	6	11
Administration	14	30	48	20	28	43	33	57	81	3	8	13	6	12	22
Capital recovery	82	176	282	119	166	256	194	336	478	27	64	107	38	72	130
TOTAL ANNUAL COST[d,e]	359	533	752	220	330	510	390	651	932	169	269	401	295	390	540

N/A = not applicable

[a]All costs are reported in thousands of dollars.

[b]The cost of electricity for dry ESP at the small model plant was estimated based on vendor-supplied data (Reference 5).

[c]The annual operating cost of the tube-type wet ESP for the boiler at the small model plant is assumed to be equal to that of the tube-type wet ESP used for controlling PM-10 emissions from the veneer dryer at the medium plywood model plant. The annual operating cost of the tube-type wet ESP for the boiler at the medium model plant is assumed to be equal to that of the tube-type wet ESP used for controlling PM-10 emissions from the veneer dryer at the large plywood model plant. The annual operating cost of the tube-type wet ESP for the boiler at the large model plant is assumed to be equal to that of the tube-type wet ESP used for controlling PM-10 emissions from the boiler at a large particleboard model plant (Reference 31.)

[d]Blowdown water requirements were estimated based on information provided by a vendor during a telephone conversation (Reference 34).

[e]The total annual cost has been estimated assuming that all boilers are equipped with multiclones. If a multiclone is required, add $17,000, $54,000, and $103,000 to the total annual cost for small, medium, and large model plants, respectively.

TABLE 5-11. COST EFFECTIVENESS OF EMISSION CONTROL ALTERNATIVES FOR WOOD WASTE-FIRED BOILER PM-10 EMISSION CONTROL

	Fabric filter			Electrostatic precipitator			Tube-type wet ESP			Venturi scrubber			Electrified filter bed		
	Small	Medium	Large	Small	Medium	Large	Small	Medium	Large	Small	Medium	Large	Small	Medium	Large
Boilers already equipped with multiclones															
Total capital cost[a]	697	1,502	2,396	1,017	1,414	2,177	1,653	2,860	4,069	168	393	659	319	602	1,100
Total annual cost[a]	359	533	752	220	330	510	390	651	933	169	269	401	295	390	540
Amount of PM-10 controlled, tons/yr[b]	77	256	511	77	256	511	76	254	506	77	256	511	74	246	490
Cost effectiveness, $/ton of PM-10 controlled[c]	4,662	2,082	1,412	2,857	1,289	998	5,132	2,563	1,842	2,195	1,051	785	3,986	1,585	1,102
Boilers requiring multiclones															
Total capital cost[d]	72982	1,59758	2,574873	1,049102	1,51670	2,355654	1,738	3,116	4,546	20053	48649	8371,136	351404	60858	1,2781,577
Total annual cost[d]	376	587	855	237	384	613	407	705	1,035	186	323	504	312	444	643
Amount of PM-10 controlled, tons/yr[b]	92	305	606	92	305	606	91	302	600	92	305	606	88	293	581
Cost effectiveness, $/ton of PM-10 controlled[c]	4,087	1,925	1,411	2,576	1,259	1,012	4,473	2,334	1,725	2,022	1,059	832	3,545	1,515	1,017

[a]All costs are reported in thousands of dollars.
[b]See Chapter 4, Tables 4-2 through 4-4.
[c]The cost effectiveness has been derived by dividing the total annual cost by the amount of PM-10 controlled.
[d]This includes the cost of installing a multiclone plus an add-on emission control device.

5.4.2 Electrostatic Precipitator

The cost of controlling PM-10 emissions from boilers using an ESP was estimated according to the method described in the OAQPS Control Cost Manual.[30] However, the cost of the dry ESP for the small model plant was estimated using vendor-supplied data.[5, 32] Tables 5-9 through 5-11 contain the results of the cost evaluation of an ESP for each of the three model plants.

5.4.3 Electrified Filter Bed

The cost of control using the EFB was estimated based on cost estimates provided by a vendor.[9] The retrofit factor of 1.4 described in Section 5.2.1 was applied to the purchased equipment cost quoted by the vendor. Factors for direct installation costs and other indirect costs given for EFB's in Table 5-1 were used to estimate the total capital cost of the EFB.

All annual operating costs with the exception of electricity were estimated using the factors given in Table 5-2 for EFB's. The electricity cost was estimated based on vendor supplied data. Tables 5-9 through 5-11 contain the results of the cost evaluation of an EFB for each of the three model plants.

5.4.4 Tube-Type Wet ESP

The capital and annual operating costs of the tube-type wet ESP for the boiler at the small model plant were assumed to be equal to that of the tube-type wet ESP used for controlling PM-10 emissions from the veneer dryer at the medium plywood model plant. The capital and annual operating costs of the tube-type wet ESP for the boiler at the medium model plant were assumed to be equal to that of the tube-type wet ESP used for controlling PM-10 emissions from the veneer dryer at the large plywood model plant. This method was assumed to be valid because the stack flow rate from the small boiler was close to that of the veneer dryer at the medium model plant and that from the medium boiler was close to that of the veneer dryer at the large model plant. Waste disposal costs were estimated separately and added to the annual operating costs.

The capital and annual operating costs of the tube-type wet ESP for the boiler at the large model plant were assumed to be

equal to that of the tube-type wet ESP used for controlling PM-10 emissions from the boiler at the large particleboard model plant. This method was assumed to be valid because the stack flow rate from the large boiler was close to that of the boiler at the large particleboard model plant.[31]

~~5.4.4~~5.4.5 Venturi Scrubber

The cost of control of PM-10 emissions from boilers using a venturi scrubber was estimated according to the method described in EPA's Control Technologies for Hazardous Air Pollutants.[2] Tables 5-9 through 5-11 contain the result of the evaluation of venturi scrubbers for the three model plants.

5.4.6 Multiclone

It is possible that there may be boilers operating without a multiclone. Table 5-129 contains capital costs, annualized costs, and cost effectiveness of adding just a multiclone as a PM control device. The cost data were provided by a vendor.[13] The purchased equipment price was also provided by the vendor. The retrofit factor of 1.4 described in Section 5.2.1 was applied to the purchased equipment cost quoted by the vendor. Factors for direct installation and other indirect costs given for multiclones in Table 5-1 were used to estimate the total capital cost of the multiclones. The total annual cost consists of electricity, capital recovery charges, insurance, property taxes, and annual maintenance costs. The additional pressure drop across the multiclone will require additional electrical energy. The electricity requirements were estimated using the pressure drop data supplied by the vendor.[13] Annual maintenance costs were supplied by the vendor. The capital recovery charges, insurance, and property taxes were estimated using the procedure described in Section 5.2.2.

5.5 REFERENCES FOR CHAPTER 5

1. OAQPS Control Cost Manual. U. S. Environmental Protection Agency. Research Triangle Park, NC. Publication No. EPA-450/3-90-006. January 1990. Chapters 5 and 6.

2. Control Technologies for Hazardous Air Pollutants. U. S. Environmental Protection Agency. Cincinnati, OH. Publication No. EPA-625/6-91-014. June 1991. Chapter 4.

TABLE 5-12. COST EFFECTIVENESS OF A MULTICLONE FOR WOOD WASTE-FIRED BOILER PM-10 EMISSION CONTROL AT MODEL PLANTS

Cost element	Model plant size		
	Small	Medium	Large
Total capital cost[a]	32	96	178
Total annual cost[a]	17	54	103
Amount of PM-10 controlled, ton/yr[b]	15	48	96
Cost effectiveness, $/ton PM-10 controlled[c]	1,133	1,125	1,073

[a]All costs are reported in thousands of dollars.
[b]The PM-10 emission factor for an uncontrolled boiler is 6.48 lb/ton of fuel burned. The PM-10 emission factor for a boiler with a multiclone where fly ash is reinjected is 5.46 lb/ton. The amount of PM-10 controlled is estimated using the difference between these two emission factors.
[c]The cost effectiveness has been derived by dividing the total annual cost by the amount of PM-10 controlled.

3. Telecon. Kalagnanam, R.S., MRI, with Sink, M.K., Pacific Environmental Services, Inc. August 6, 1992. Capital cost of venturi scrubbers.

4. Reference 1, p. 2-5.

5. Telecon. Kalagnanam, R. S., MRI, with Kohl, R., Environmental Elements Corp., Baltimore, MD. August, 26, 1992. Cost of dry ESP for the small model plant.

6. Letter from Raemhild, G.A., Geoenergy International Corporation, to Hayes, R.T., MRI. April 27, 1992. Tube-type wet-ESP cost quotations.

7. Letter from Otero, S., Jr., United McGill Corporation, to Kalagnanam, R.S., MRI. August 6, 1992. Wet electrostatic precipitators (plate-type) cost quotations.

8. Letter from Alexander, J.C., EGB Filters, Inc., to Hayes, R.T., MRI. January 22, 1992. Electrified filter bed cost quotations.

9. Letter from Alexander, J.C., EGB Filters, Inc., to Hayes, R.T., MRI. August 6, 1992. Electrified filter bed cost quotations.

10. Letter from Sheppard, S.V., Ceilcote/Air Pollution Control, to Hayes, R.T., MRI. February 10, 1992. Ionizing wet scrubber cost quotations for a medium-sized model plant.

11. Letter from Sheppard, S.V., Ceilcote/Air Pollution Control, to Hayes, R.T., MRI. April 6, 1992. Ionizing wet scrubber cost quotations for a small-sized model plant.

12. Letter from Sheppard, S.V. Ceilcote/Air Pollution Control, to Hayes, R.T., MRI. April 6, 1992. Ionizing wet scrubber cost quotations for a large-sized model plant.

13. Telefax from Miles, R., Miles Engineering Sales, to Kalagnanam, R.S., MRI. June 8, 1992. Multiclone cost quotations.

14. Telecon. Kalagnanam, R.S., MRI, with Vatavuk, W.M., EPA/ESD. March 23, 1992. Methods of emission control cost evaluation.

15. Reference 1, p. 6-46.

16. Reference 1, pp. 5-42 and 6-53.

17. Reference 2, p. 4-96.

18. Reference 2, p. 4-97.

19. Reference 1, p. 5-44.

20. Reference 1, pp. 5-41 and 6-52.

21. Reference 1, p. 6-52.

22. Reference 1, pp. 5-49 and 6-65.

23. Reference 1, p. 5-41.

24. Reference 1, p. 6-53.

25. Reference 1, p. 5-35.

26. Reference 1, p. 6-65.

27. Reference 1, p. 6-56.

28. Telecon. Kalagnanam, R.S., MRI, with Raemhild, G.A., Geoenergy International Corporation. August 6, 1992. Cost of water treatment systems and blowdown water requirements.

29. Reference 1, Chapter 5.

30. Reference 1, Chapter 6.

31. Midwest Research Institute. Alternative Control Technology Document - PM-10 Emissions from the Wood Products Industry: Particleboard, Oriented Strandboard, and Waferboard Manufacturing, Draft. Prepared for U. S. Environmental Protection Agency. Research Triangle Park, NC. September 1992. Chapter 5.

~~31~~
32. Telecon. Kalagnanam, R.S., MRI, with Borenstein, M., Air Pol, Inc. June 30, 1992. Blowdown practices and makeup water requirements for venturi scrubbers.

TECHNICAL REPORT DATA
(Please read Instructions on the reverse before completing)

1. REPORT NO. EPA-XXX/X-XX-XXX	2.	3. RECIPIENT'S ACCESSION NO.
4. TITLE AND SUBTITLE Alternative Control Technology Document --PM-10 Emissions from the Wood Products Industry: Plywood Manufacturing		5. REPORT DATE September 1992
		6. PERFORMING ORGANIZATION CODE
7. AUTHOR(S)		8. PERFORMING ORGANIZATION REPORT NO.
9. PERFORMING ORGANIZATION NAME AND ADDRESS Midwest Research Institute 401 Harrison Oaks Blvd., Suite 350 Cary, NC 27513-2412		10. PROGRAM ELEMENT NO.
		11. CONTRACT/GRANT NO. 68-D1-0115
12. SPONSORING AGENCY NAME AND ADDRESS U.S. Environmental Protection Agency Emission Standards Division Office of Air Quality Planning and Standards Research Triangle Park, NC 27711		13. TYPE OF REPORT AND PERIOD COVERED
		14. SPONSORING AGENCY CODE

15. SUPPLEMENTARY NOTES

EPA Work Assignment Manager: Conrad Chin (919) 541-1512

16. ABSTRACT

This alternative control techniques document describes available control technologies for reducing PM-10 emissions from veneer dryers, wood waste-fired boilers, and sanding/trimming operations at plywood manufacturing facilities. Information on uncontrolled PM-10 emissions is included. Fabric filters, wet and dry electrostatic precipitators (ESP's), electrified filter beds (EFB's - also known as electrified gravel bed), venturi scrubbers, and ionizing wet scrubbers are discussed. Achievable controlled PM-10 emission levels, costs, cost effectiveness, and environmental impacts are presented.

17. KEY WORDS AND DOCUMENT ANALYSIS

a. DESCRIPTORS	b. IDENTIFIERS/OPEN ENDED TERMS	c. COSATI Field/Group
PM-10 Emissions Wood Products Control Techniques for PM-10 Emissions Costs of Emission Controls		

18. DISTRIBUTION STATEMENT	19. SECURITY CLASS *(This Report)*	21. NO. OF PAGES
	20. SECURITY CLASS *(This page)*	22. PRICE

EPA Form 2220-1 (Rev. 4-77) PREVIOUS EDITION IS OBSOLETE

INSTRUCTIONS

1. **REPORT NUMBER**
Insert the EPA report number as it appears on the cover of the publication.

2. **LEAVE BLANK**

3. **RECIPIENTS ACCESSION NUMBER**
Reserved for use by each report recipient.

TITLE AND SUBTITLE
Title should indicate clearly and briefly the subject coverage of the report, and be displayed prominently. Set subtitle, if used, in smaller type or otherwise subordinate it to main title. When a report is prepared in more than one volume, repeat the primary title, add volume number and include subtitle for the specific title.

5. **REPORT DATE**
Each report shall carry a date indicating at least month and year. Indicate the basis on which it was selected *(e.g., date of issue, date of approval, date of preparation, etc.)*.

6. **PERFORMING ORGANIZATION CODE**
Leave blank.

7. **AUTHOR(S)**
Give name(s) in conventional order *(John R. Doe, J. Robert Doe, etc.)*. List author's affiliation if it differs from the performing organization.

8. **PERFORMING ORGANIZATION REPORT NUMBER**
Insert if performing organization wishes to assign this number.

9. **PERFORMING ORGANIZATION NAME AND ADDRESS**
Give name, street, city, state, and ZIP code. List no more than two levels of an organizational hirearchy.

10. **PROGRAM ELEMENT NUMBER**
Use the program element number under which the report was prepared. Subordinate numbers may be included in parentheses.

11. **CONTRACT/GRANT NUMBER**
Insert contract or grant number under which report was prepared.

12. **SPONSORING AGENCY NAME AND ADDRESS**
Include ZIP code.

13. **TYPE OF REPORT AND PERIOD COVERED**
Indicate interim final, etc., and if applicable, dates covered.

14. **SPONSORING AGENCY CODE**
Insert appropriate code.

15. **SUPPLEMENTARY NOTES**
Enter information not included elsewhere but useful, such as: Prepared in cooperation with, Translation of, Presented at conference of, To be published in, Supersedes, Supplements, etc.

16. **ABSTRACT**
Include a brief *(200 words or less)* factual summary of the most significant information contained in the report. If the report contains a significant bibliography or literature survey, mention it here.

17. **KEY WORDS AND DOCUMENT ANALYSIS**
(a) DESCRIPTORS - Select from the Thesaurus of Engineering and Scientific Terms the proper authorized terms that identify the major concept of the research and are sufficiently specific and precise to be used as index entries for cataloging.

(b) IDENTIFIERS AND OPEN-ENDED TERMS - Use identifiers for project names, code names, equipment designators, etc. Use open-ended terms written in descriptor form for those subjects for which no descriptor exists.

(c) COSATI FIELD GROUP - Field and group assignments are to be taken from the 1965 COSATI Subject Category List. Since the majority of documents are multidisciplinary in nature, the Primary Field/Group assignment(s) will be specific discipline, area of human endeavor, or type of physical object. The application(s) will be cross-referenced with secondary Field/Group assignments that will follow the primary posting(s).

18. **DISTRIBUTION STATEMENT**
Denote releasability to the public or limitation for reasons other than security for example "Release Unlimited." Cite any availability to the public, with address and price.

19. & 20. **SECURITY CLASSIFICATION**
DO NOT submit classified reports to the National Technical Information service.

21. **NUMBER OF PAGES**
Insert the total number of pages, including this one and unnumbered pages, but exclude distribution list, if any.

22. **PRICE**
Insert the price set by the National Technical Information Service or the Government Printing Office, if known.