AP-42 Section 9.13.3
Reference 6
Report Sect.
Reference

AP-42: REFERENCE 6
SECTION 4: REFERENCE 5

EMISSION PERFORMANCE TESTING OF TWO FRYER LINES

SITE: EAGLE SNACKS, INC.

Visalia, California

DATE: NOVEMBER 1990

Note: This is a reference cited in *AP 42, Compilation of Air Pollutant Emission Factors, Volume I Stationary Point and Area Sources.* AP42 is located on the EPA web site at www.epa.gov/ttn/chief/ap42/

The file name refers to the reference number, the AP42 chapter and section. The file name "ref02_c01s02.pdf" would mean the reference is from AP42 chapter 1 section 2. The reference may be from a previous version of the section and no longer cited. The primary source should always be checked.

Prepared For:

EAGLE SNACKS, INC.
2000 North Road 80
Visalia, California 93291

Contact: Don De Hart
(314) 577-4158

Prepared By:

THOMAS ROONEY
(213) 540-4676

WESTERN ENVIRONMENTAL SERVICES
1010 South Pacific Coast Highway
Redondo Beach, California 90277

TABLE OF CONTENTS

		Page
1.0	INTRODUCTION	1-1
2.0	SUMMARY OF RESULTS	2-1
	2.1 Discussion of Results	2-1
	2.2 Quality Assurance	2-2
3.0	SITE DESCRIPTION	3-1
	3.1 Tortilla Chip Line	3-1
	3.2 Continuous Fryer	3-1
4.0	SAMPLING AND ANALYTICAL PROCEDURE	4-1
	4.1 Traverse Point Location	4-1
	4.2 Particulate Sampling and Analysis	4-1
	4.3 Inorganic Gas Determination	4-4
	4.4 Particle Sizing	4-4
5.0	QUALITY ASSURANCE	5-1
	5.1 Instrument Calibration Gases	5-1
	5.2 System Quality Assurance	5-1
	5.3 Test Calibration	5-1
	5.4 Field Equipment Quality Assurance	5-1
APPENDIX A		A-0
	Field Data	A-1
APPENDIX B		B-0
	Calibration Information	B-1
APPENDIX C		C-0
	Sample Calculation	C-1
APPENDIX D		D-0
	Process Data	D-1

LIST OF TABLES

Page

2.1 Particulate Sampling - Continuous Fryer..... 2-3

2.2 Particulate Analysis - Continuous Fryer..... 2-4

2.3 Particulate Sampling - Tortilla Line..... 2-5

2.4 Particulate Analysis - Tortilla Line..... 2-6

2.5 Particle Sizing - Continuous Fryer..... 2-7

2.6 Particle Sizing - Tortilla Line..... 2-8

LIST OF FIGURES

Page

3.1 Site Diagram - Tortilla Fryer..... 3-2

3.2 Site Diagram - Continuous Fryer..... 3-3

4.1 Particulate Sample Apparatus..... 4-2

4.2 Particle Sizing Sampling System..... 4-5

1.0 INTRODUCTION

At the request of Anheuser Busch, Inc., St. Louis, Missouri, Western Environmental Services (WES) conducted a compliance test at Eagle Snacks, Visalia, California. The testing consisted of collecting particulate samples and particle sizing samples from the Continuous Fryer and the Tortilla Line. The testing was performed on October 10 thru October 12, 1990 to provide compliance test data for the Tulare County Air Pollution Control District.

Triplicate particulate and particle sizing samples were collected at two locations, the stack exhaust from a continuous fryer line and the stack exhaust from tortilla fryer line. The testing of each unit was conducted on separate consecutive days. The particulate tests were conducted using EPA Method 5. The particle sizing was performed by using an Anderson Impactor Mark III.

The following sections will be presented in this report: Summary of Results, Site Description, Sampling and Analytical Procedures, Quality Assurance, and Appendices. The appendices contain the Field and Laboratory Data sheets, Calibration Information, Sample Calculations, and Process Data.

2.0 SUMMARY OF RESULTS

2.1 Discussion of Results

Table 2.1 through 2.6 show the test results. Table 2.1 and Table 2.3 present the particulate sampling results while Tables 2.2 and 2.4 show the particulate analysis. Table 2.5 and 2.6 depicts the particle sizing results.

The test data is summarized below:

Test #	Charge Rate #/Hr	Particulates Concentration Grs/SDCF	Particulates Emission Rate #/Hr
Continuous Fryer			
Test #1	9,820	0.0488	1.13
Test #2	10,930	0.0368	0.84
Test #3	11,230	0.0487	1.03
Average	10,660	0.0448	1.00
Tortilla Line #1			
Test #1	1,525	0.0064	0.09
Test #2	1,535	0.0093	0.13
Test #3	1,176	0.0207	0.29
Average	1,412	0.0122	0.17

Particle Size (noncondensable only)

ug	Test 1	Test 2	Test 3	Average
	Cumulative Percent Less Than Stated Micron Size			
Continuous Fryer				
10	75	83	99	86
5	60	69	72	67
3	48	56	29	44
1	26	29	2	19
Tortilla Line				
10	100	85	55	80
5	100	60	23	61
3	100	37	8	48
1	100	6	2	36

The Particle Size Test Data does <u>not</u> include condensable particles.

The condensable particulates, less than 0.1 micron diameter, for the continuous fryer represents 86.4 % of the total particulates. The condensable particulates, less than 0.1 micron diameter, for the tortilla line shows 92.7 % of the total particulates.

2.2 Quality Assurance

The particulate sampling train was checked for leaks prior to and after each test. The sampling equipment was calibrated according to the Quality Assurance Handbook for Air Pollution Measurement Systems.

TABLE 2.1 PARTICULATE SAMPLING

SITE: Eagle Snacks, Inc.
UNIT: Continuous Fryer
DATE: October 10, 1990

STACK PARAMETERS	TEST 1	TEST 2	TEST 3	AVERAGE
Barometric Pressure "Hg	29.95	29.85	29.85	29.88
Static Pressure "H20	-0.21	-0.21	-0.21	-0.21
CO2 %	0.00	0.00	0.00	0.00
O2 %	20.95	20.95	20.95	20.95
N2 %	79.054	79.054	79.054	79.05
CO ppm	10	10	10	10.00
Stack Diameter "	30	30	30	30.00
Stack Temperature F	235	235	235	235.00
Stack Pressure "Hg	29.93	29.83	29.83	29.87
TEST CONDITIONS	**TEST 1**	**TEST 2**	**TEST 3**	**AVERAGE**
Sample Volume Ft3	27.151	22.777	20.93	23.62
Meter F	90	102	100	97.33
Nozzle Dia "	0.39	0.33	0.33	0.35
Time Min	60	60	60	60.00
Points	12	12	12	12.00
Pitot Tube Factor cp	0.79	0.79	0.79	0.79
Orfice Press "H2O	0.67	0.5	0.4	0.52
Condensate mls	795	756	659	736.67
Velocity Pressure "H2O	0.184	0.214	0.173	0.19
Meter Calibration	0.987	0.987	0.987	0.99
TEST CALCULATIONS	**TEST 1**	**TEST 2**	**TEST 3**	**AVERAGE**
Water Vapor SDCF	37.421	35.585	31.019	34.67
Gas Sampled SDCF	25.784	21.089	19.443	22.11
Moisture %	59.21	62.79	61.47	61.15
Molecular Weight Dry	28.84	28.84	28.84	28.84
Molecular Weight Wet	22.42	22.03	22.18	22.21
Gas Velocity Ft/Sec	29.48	32.13	28.79	30.13
Flow Rate ACFM	8683	9462	8480	8875
Flow Rate DSCFM	2692	2667	2475	2611
Isokinetics %	94.5	109.0	108.3	103.92

TABLE 2.2 PARTICULATE ANALYSIS

SITE: Eagle Snacks, Inc.
UNIT: Continuous Fryer
DATE: October 10, 1990

ANALYTICAL DATA	TEST 1	TEST 2	TEST 3	AVERAGE
FRONT HALF				
Probe mg	34.5	26.1	30.6	30.40
Filter mg	0.0	0.0	8.9	2.97
Blanks mg	0.5	0.5	0.5	0.50
Subtotal mg	34.0	25.6	39.0	32.87
BACK HALF				
Impingers Inorg mg	0.0	0.0	0.3	0.10
Impingers Org mg	48.1	25.2	22.6	31.97
Blank mg	0.5	0.5	0.5	0.50
Subtotal mg	47.6	24.7	22.4	31.57
Total Weight Gain mg	81.6	50.3	61.4	64.43

EMISSION DATA	TEST 1	TEST 2	TEST 3	AVERAGE
FRONT HALF				
Grs/SDCF	0.0203	0.0187	0.0310	0.0233
Lbs/Hr	0.469	0.428	0.656	0.518
BACK HALF				
Grs/SDCF	0.0285	0.0181	0.0178	0.0214
Lbs/Hr	0.657	0.413	0.377	0.482

TOTAL EMISSIONS	TEST 1	TEST 2	TEST 3	AVERAGE
Grs/SDCF	0.0488	0.0368	0.0487	0.0448
Lbs/Hrs	1.126	0.841	1.033	1.000

TABLE 2.3 PARTICULATE SAMPLING

SITE: Eagle Snacks, Inc.
UNIT: Tortilla Line
DATE: October 11, 1990

STACK PARAMETERS	TEST 1	TEST 2	TEST 3	AVERAGE
Barometric Pressure "Hg	29.85	29.85	29.85	29.85
Static Pressure "H20	-0.08	-0.08	-0.08	-0.08
CO2 %	0.00	0.00	0.00	0.00
O2 %	20.95	20.95	20.95	20.95
N2 %	79.054	79.054	79.054	79.05
CO ppm	10	10	10	10.00
Stack Diameter "	18	18	18	18.00
Stack Temperature F	179	136	173	162.67
Stack Pressure "Hg	29.84	29.84	29.84	29.84

TEST CONDITIONS	TEST 1	TEST 2	TEST 3	AVERAGE
Sample Volume Ft3	105.099	113.776	103.441	107.44
Meter F	94	117	88	99.67
Nozzle Dia "	0.325	0.325	0.325	0.33
Time Min	180	180	180	180.00
Points	10	10	10	10.00
Pitot Tube Factor cp	0.79	0.79	0.79	0.79
Orfice Press "H2O	1.1	1.24	1.08	1.14
Condensate mls	376	426	325	375.67
Velocity Pressure "H2O	0.131	0.132	0.129	0.13
Meter Calibration	0.987	0.987	0.987	0.99

TEST CALCULATIONS	TEST 1	TEST 2	TEST 3	AVERAGE
Water Vapor SDCF	17.698	20.052	15.298	17.68
Gas Sampled SDCF	98.861	102.792	98.362	100.00
Moisture %	15.18	16.32	13.46	14.99
Molecular Weight Dry	28.84	28.84	28.84	28.84
Molecular Weight Wet	27.19	27.07	27.38	27.21
Gas Velocity Ft/Sec	21.69	21.08	21.35	21.37
Flow Rate ACFM	2300	2235	2264	2266
Flow Rate DSCFM	1608	1652	1630	1630
Isokinetics %	104.9	106.1	102.9	104.61

TABLE 2.4 PARTICULATE ANALYSIS

SITE: Eagle Snacks, Inc.
UNIT: Tortilla Line No. 1
DATE: October 11, 1990

ANALYTICAL DATA	TEST 1	TEST 2	TEST 3	AVERAGE
FRONT HALF				
Probe mg	23.7	20.6	20.4	21.57
Filter mg	2.8	7.8	90.1	33.57
Blanks mg	0.5	0.5	0.5	0.50
Subtotal mg	26.0	27.9	110.0	54.63
BACK HALF				
Impingers Inorg mg	0.0	0.0	0.0	0.00
Impingers Org mg	15.6	34.8	22.6	24.33
Blank mg	0.5	0.5	0.5	0.50
Subtotal mg	15.1	34.3	22.1	23.83
Total Weight Gain mg	41.1	62.2	132.1	78.47
EMISSION DATA	**TEST 1**	**TEST 2**	**TEST 3**	**AVERAGE**
FRONT HALF				
Grs/SDCF	0.0041	0.0042	0.0173	0.0085
Lbs/Hr	0.056	0.059	0.241	0.119
BACK HALF				
Grs/SDCF	0.0024	0.0051	0.0035	0.0037
Lbs/Hr	0.032	0.073	0.048	0.051
TOTAL EMISSIONS	**TEST 1**	**TEST 2**	**TEST 3**	**AVERAGE**
Grs/SDCF	0.0064	0.0093	0.0207	0.0122
Lbs/Hrs	0.088	0.132	0.289	0.170

TABLE 2.5 PARTICLE SIZING TEST DATA

Site: Eagle Snacks, Inc.
Unit: Continuous Fryer
Date: October 10, 1990

Micron Cutoff ug	Cumulative Percent Less Than Stated Micron Size Test 1	2	3	Average
10	75	83	99	86
5	60	69	72	67
3	48	56	29	44
1	26	29	2	19

TABLE 2.6 PARTICLE SIZING TEST DATA

Site: Eagle Snacks, Inc.
Unit: Tortilla Line
Date: October 11 and 12, 1990

Micron Cutoff ug	Cumulative Percent Less Than Stated Micron Size Test 1	2	3	Average
10	100	85	55	80
5	100	60	23	61
3	100	37	8	48
1	100	6	2	36

3.0 SITE DESCRIPTION

3.1 Tortilla Chip Line

Samples were collected from a 18" diameter vertical stack located on the roof. The sampling ports are located at 90 degrees of each other on the same horizontal plane. Figure 3.1 is the site diagram.

3.2 Continuous Fryer

Samples were collected from a 30 inch diameter duct located above the roof. The sampling ports are two 3" diameter ports at 90 degrees of each other on the same horizontal plane. Figure 3.2 is the site diagram.

Eagle Snacks Inc
Visalia, CA

TESTING STACK
TORTILLA FRYER NO. 1

FIGURE 3.1

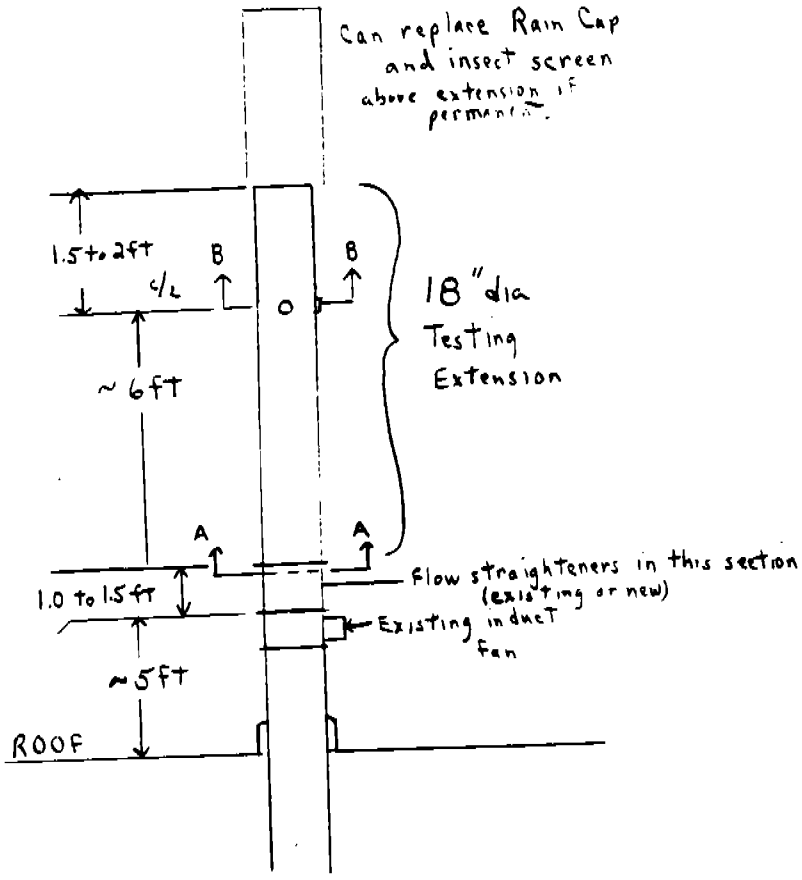

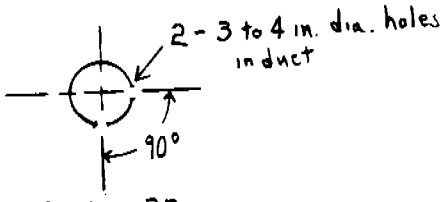

Section BB
Sample Ports
(any two accessible directions on duct w/ 90° between ports)

2 peices of heavy sheet metal crossed in duct center for entire height of 1.0 to 1.5 ft section.

Section AA
Flow Straightners

DMD
8-29-90

Eagle Snacks Inc
Visalia, CA

TEMPORARY TESTING STACKS

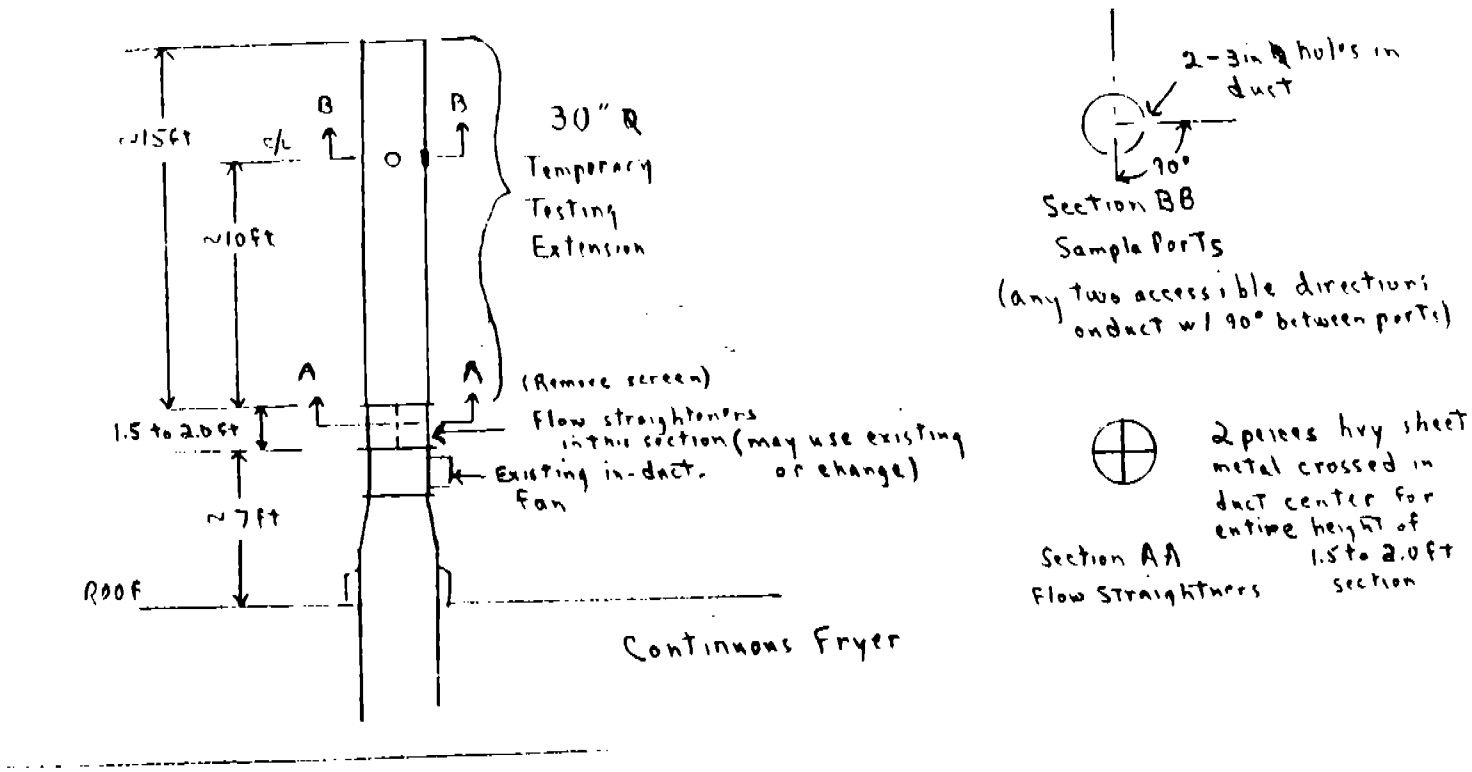

FIGURE 3.2

4.0 SAMPLING AND ANALYTICAL PROCEDURES

4.1 Traverse Point Location

Traverse point locations were determined by utilizing EPA Method 1, "Sample and Velocity Traverses for Stationary Sources." Twenty four sampling points were used at the continuous fryer and twenty points were used at the tortilla stack.

4.2 Particulate Sampling and Analysis

Six EPA Method Five samples were collected during the testing program. Triplicate tests were performed at each location.

The sampling train consisted of a glass nozzle, glass probe, heated four inch filter, four glass impingers, silica gel impinger, pump, and a calibrated dry gas meter. The first and second impingers each contained 100 milliliters of distilled water. The third impinger was empty. Figure 4.1 depicts the sampling train.

After assembling the sampling train, it was checked for leaks and the sampling was not started until a leak rate of less than 0.02 cfm at 15 inches of mercury was achieved.

During the testing, the sampling was performed isokinetically at each traverse point. The velocity measurements were made at individual traverse points using a Type "S" pitot tube connected to an magnehlic with divisions measuring 0.05 inches of water. The stack temperature was measured by using a Type K thermocouple wire attached to a calibrated digital readout.

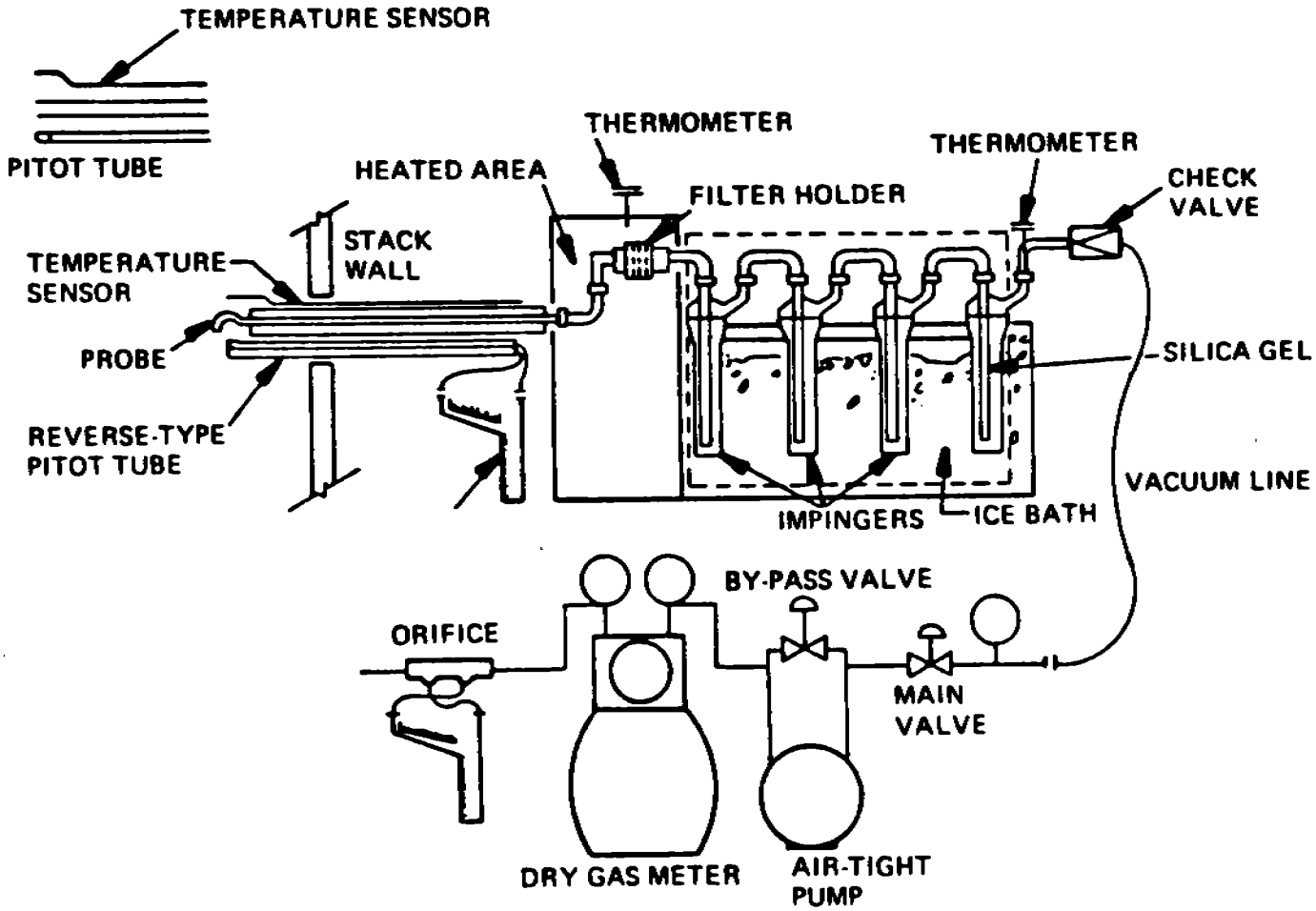

EPA METHOD 5 PARTICULATE SAMPLE APPARATUS

FIGURE 4.1

Upon completion of each test, the sampling train was checked for leaks before disassembling the sampling system. The nozzle and the probe were removed from the train. The probe was rinsed and brushed with a nylon brush on a stainless steel handle. The probe and nozzle were rinsed with acetone. The solutions were placed into a 500 milliliter amber glass bottle. The bottle was labeled and retained for analysis.

The impinger solutions were re-measured and recovered with distilled water. The solutions were placed into 950 milliliter amber glass bottles. The bottles were labeled and retained for analysis. In addition, the impingers were rinsed with acetone, and the solutions were placed into the probe rinse bottle labeled for acetone.

The glass fiber filter was removed from the filter holder and was placed into a petri dish. The front half of the filter holder was rinsed with acetone. The back-half of the filter holder was rinsed with distilled water. The distilled water rinses were placed with the impinger solutions and the acetone rinses were placed with acetone probe rinse.

The analysis was performed by evaporating the acetone probe rinses to dryness in tared beakers. The water solutions were combined and extracted with 50 milliliters of petroleum ether. The inorganic and organic fractions were evaporated in tared beakers. The beakers and filter were placed into a desiccator and were weighed to constant weights.

The data reduction was performed by using EPA Method Five calculations.

4.3 Inorganic Gas Determination

During each series of tests, gaseous samples from the stack were analyzed for carbon dioxide and oxygen. The samples were collected by bag samples and analyzing with Hach thermal conductivity gas chromotograph.

4.4 Particle Sizing

Samples were collected at a single traverse point using an Anderson eight stage impactor. Triplicate samples were collected at each location. Due to the high moisture at the potato chip continuous fryer, the impactor was heated to 250 degrees F. Figure 4.2 illustrates the sampling train.

Before testing, velocity measurements were collected to establish the proper nozzle size. After assembling the sampling train was checked for leaks. Sampling was not begun until a leak rate of less than 0.02 cfm at 15 inches of mercury had been achieved.

The sampling was performed isokinetically at a single traverse point. The sampling system consisted of a heated impactor with a Type S pitot tube. The stack temperature was determined with a Type K thermocouple wire attached to a digital readout.

Upon completion of the testing, the sampling train was checked for leaks at the maximum vacuum encountered during the testing. The impactor was removed from the sampling system.

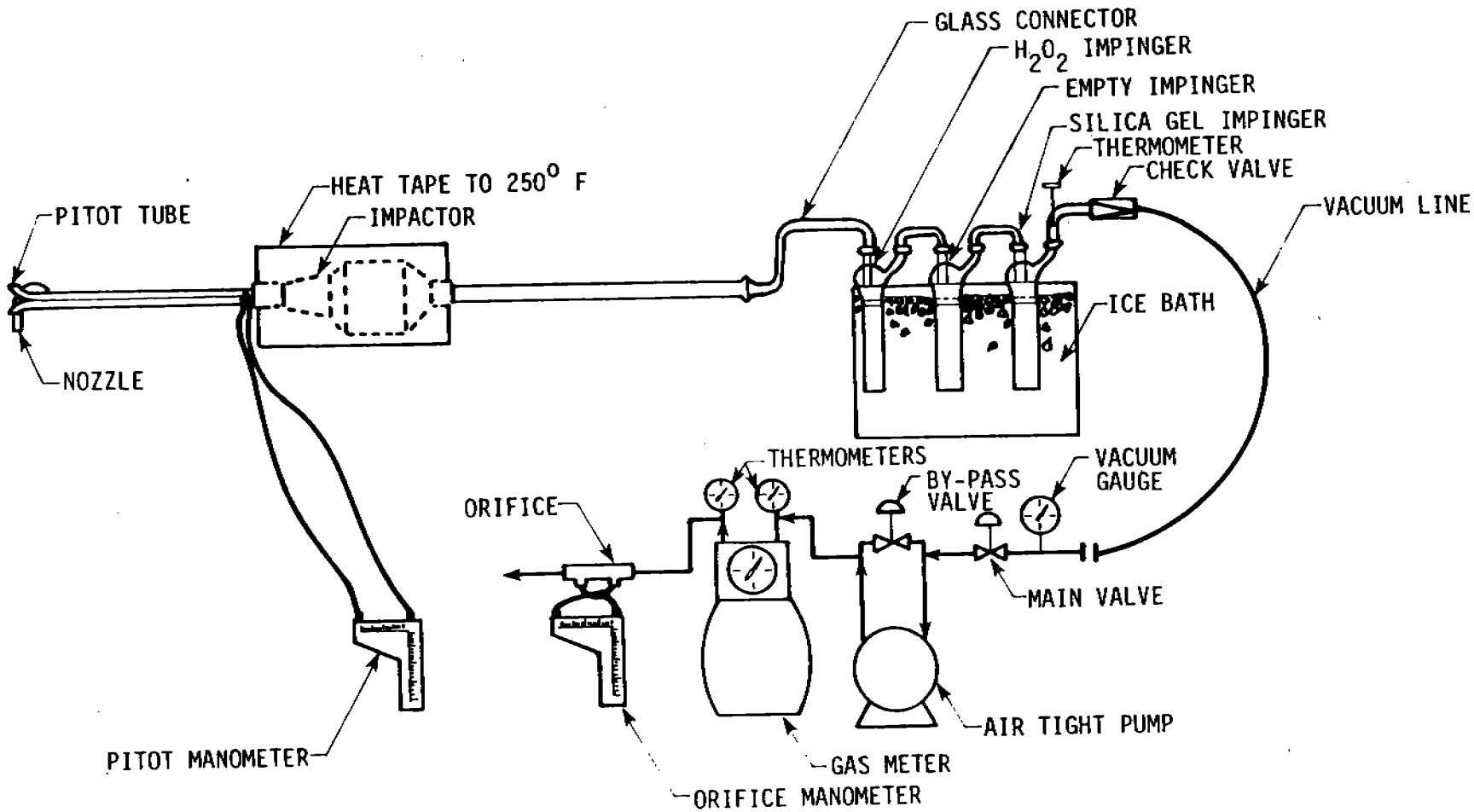

FIGURE 4.2 PARTICLE SIZING SAMPLING SYSTEM

The nozzle was rinsed with acetone. The rinse was placed into a sample container. The glass fiber filters was removed and placed into petri dishes.

The analyses was performed by evaporating the nozzle rinse to dryness in tared beakers and was reweighed to a constant weight. The filters was reweighed to a constant weight.

The calculations followed EPA Method Five guidelines. The results were reported as total particulates and the percentage at each cutoff size.

5.0 QUALITY ASSURANCE

5.1 Instrument Calibration Gases

The instrument calibration gases were certified by an independent laboratory and copies of the certifications are included in the appendix of this report.

5.2 System Quality Assurance

The system calibration was performed before and after each test by injecting a calibration gas into the probe and determining the percent recovery at the instrument. Linearity checks were performed on the analyzers during the testing program.

5.3 Test Calibration

Before and after each test period, the continuous monitors were zeroed and spanned with EPA Protocol #1 span gases. The test calibration data is located in Appendix A.

5.4 Field Equipment Quality Assurance

The calibration of the pitot tube, dry gas meter, digital thermometers, and manometers were performed by utilizing standard EPA Methodology, "Quality Assurance Handbook for Air Pollution Measurement Systems, Volume III, Stationary Source Specific Methods (EPA-600/4-77-0278).

WESTERN ENVIRONMENTAL SERVICES

APPENDIX A

.04 = 261

FIELD DATA

PLANT Eagle Snacks
DATE 10-10-90
SAMPLING LOCATION Cont. Fryer
SAMPLE TYPE Particulate
RUN NUMBER #1
OPERATOR Ty Hastriter
AMBIENT TEMPERATURE 65°
BAROMETRIC PRESSURE 29.95
STATIC PRESSURE, (P_s) .21
FILTER NUMBER (s) 4.137

#1

PROBE LENGTH AND TYPE #23
NOZZLE I.D. .39
ASSUMED MOISTURE, % 55%
SAMPLE BOX NUMBER Green
METER BOX NUMBER #86 Green
METER $\Delta H_@$ # 13 (0-2")
C FACTOR
PROBE HEATER SETTING 250°
HEATER BOX SETTING 250°
REFERENCE Δp # (0-.50")

SCHEMATIC OF TRAVERSE POINT LAYOUT

READ AND RECORD ALL DATA EVERY 2½ MINUTES

Preleak ✓ < .02 cfm

Postleak ✓ < .012 cfm

TRAVERSE POINT NUMBER	SAMPLING TIME, min	CLOCK TIME (24-hr CLOCK)	GAS METER READING (V_m), ft^3	VELOCITY HEAD (Δp_s), in. H_2O	ORIFICE PRESSURE DIFFERENTIAL (ΔH), in. H_2O DESIRED	ORIFICE PRESSURE DIFFERENTIAL (ΔH), in. H_2O ACTUAL	STACK TEMPERATURE (T_s), °F	DRY GAS METER TEMPERATURE INLET ($T_{m\ in}$), °F	DRY GAS METER TEMPERATURE OUTLET ($T_{m\ out}$), °F	PUMP VACUUM, in. Hg	SAMPLE BOX TEMPERATURE, °F	IMPINGER TEMPERATURE, °F	Probe
	0	920	400.946										
1		9:22 3	402.075	.20	.73	.73	255	65	65		250	60	300
2	5	9:25	403.230	.20	.76	.76	237	67	66		250	60	
3		9:27 3	404.400	.22	.83	.80	234	70	67		225	60	
4	10	9:30	405.500	.22	.83	.65	239	74	67		250	58	
5		9:32 3	406.550	.21	.87	.64	234	79	68		275	65	
6	15	9:35	407.615	.23	1.04	.60	240	88	70		260	68	
7		9:37 3	408.735	.19	.87	.65	238	91	71		240	70	295
8	20	9:40	409.860	.17	.79	.66	238	96	74		250	72	
9		9:42 3	411.000	.16	.75	.68	235	100	78		275	75	
10	25	9:45	412.125	.15	.71	.68	232	102	80		285	80	
11		9:47 3	413.250	.14	.66	.65	232	104	82		300	80	
12	30	9:50	414.400	.11	.53	.64	226	104	84		275	80	
1		9:52 3	415.620	.22	1.03	.90	245	106	87		285	80	
2	35	9:55	416.725	.21	1.02	.67	223	106	90		300	80	260
3		9:57 3	417.850	.21	1.00	.65	235	107	92		275	80	
4	40	1000	418.985	.20	.95	.65	236	106	94		275	80	
5		1002 3	420.085	.20	.95	.63	237	105	95		280	80	
6	45	1005	421.200	.22	1.05	.62	237	106	96		275	82	
7		1007 3	422.345	.20	.96	.67	235	105	98		290	78	
8	50	1010	423.470	.17	.81	.66	236	105	98		285	74	225
9		1012 3	424.600	.17	.81	.64	236	105	98		310	76	
10	55	1015	425.760	.16	.77	.67	234	104	100		275	76	
11		1017 3	426.910	.16	.77	.63	230	104	100		250	78	
	60	1020	428.097	.14	.68	.65	225	104	100		260	78	

COMMENTS: 12

151 .184 .67 235 90

A00001

85 e 30

FIELD DATA

PLANT Eagle Snacks
DATE 10-10-90
SAMPLING LOCATION Cont. Fryer
SAMPLE TYPE Particulate
RUN NUMBER #2
OPERATOR Ty Hastriter
AMBIENT TEMPERATURE 88
BAROMETRIC PRESSURE 29.85
STATIC PRESSURE, (P_s) -0.21
FILTER NUMBER (s) 4.138

#2

PROBE LENGTH AND TYPE #23
NOZZLE I.D. .330
ASSUMED MOISTURE, % 55%
SAMPLE BOX NUMBER Green
METER BOX NUMBER #86 Green
METER $\Delta H_@$ #13 (0-2")
C FACTOR
PROBE HEATER SETTING 250°
HEATER BOX SETTING 250°
REFERENCE Δp #4 (0-.50")

SCHEMATIC OF TRAVERSE POINT LAYOUT

READ AND RECORD ALL DATA EVERY 2½ MINUTES

Preleak v< .012 cfm

Postleak v< .008 cfm

TRAVERSE POINT NUMBER	SAMPLING TIME, min	CLOCK TIME (24-hr CLOCK)	GAS METER READING (V_m), ft^3	VELOCITY HEAD (Δp_s), in. H_2O	ORIFICE PRESSURE DIFFERENTIAL (ΔH), in. H_2O DESIRED	ORIFICE PRESSURE DIFFERENTIAL (ΔH), in. H_2O ACTUAL	STACK TEMPERATURE (T_s), °F	DRY GAS METER TEMPERATURE INLET ($T_{m\ in}$), °F	DRY GAS METER TEMPERATURE OUTLET ($T_{m\ out}$), °F	PUMP VACUUM, in. Hg	SAMPLE BOX TEMPERATURE, °F	IMPINGER TEMPERATURE, °F	Probe
	0	1219	428.708										
1		1222	429.460	.11	.24	.25	232	94	94		250	65	300
2	5	1224	430.185	.14	.32	.32	231	90	94		275	65	
3		1227	430.985	.16	.36	.36	239	90	94		275	65	
4	10	1229	431.780	.19	.43	.43	238	90	92		285	64	
5		1232	432.650	.19	.43	.43	238	92	92		265	65	
6	15	1234	433.500	.19	.43	.43	238	93	92		275	68	
7		1237	434.475	.23	.52	.52	237	97	92		275	69	
8	20	1239	435.475	.23	.52	.52	238	97	93		265	69	
9		1242	436.350	.18	.41	.41	237	102	92		235	74	
10	25	1244	437.300	.22	.50	.50	238	102	92		275	80	
11		1247	438.300	.23	.53	.53	239	106	96		275	84	
12	30	1249	439.310	.23	.54	.54	229	108	98		255	85	
1		1252	440.350	.26	.61	.61	232	110	100		260	84	
2	35	1254	441.415	.26	.61	.61	234	110	100		270	84	
3		1257	442.570	.32	.75	.75	234	102	100		275	82	
4	40	1259	443.770	.33	.77	.77	235	112	102		275	88	
5		1302	444.915	.28	.65	.65	237	114	102		285	90	
6	45	1304	445.900	.20	.47	.47	237	116	103		299	90	
7		1307	446.800	.19	.45	.45	235	114	104		285	88	
8	50	1309	447.675	.18	.42	.42	236	114	104		265	88	
9		1312	448.520	.17	.40	.40	233	114	104		290	88	
10	55	1314	449.355	.17	.40	.40	231	115	104		295	84	
11		1317	450.330	.24	.56	.56	233	115	104		265	82	
12	60	1319	451.485	.32	.76	.70	227	115	104		270	82	
				.214	.76	.50	235	102					

COMMENTS:

VLC 29 + 727 = 756

EPA (Dur) 235

A00002

022 ec

075 e19

FIELD DATA

#3

PLANT Eagle Snacks
DATE 10-10-90
SAMPLING LOCATION Cont. Fryer
SAMPLE TYPE Particulate
RUN NUMBER #3
OPERATOR Ty Hastriter
AMBIENT TEMPERATURE 90°
BAROMETRIC PRESSURE 29.85
STATIC PRESSURE, (P_s) .21
FILTER NUMBER (s) 4.149

PROBE LENGTH AND TYPE #23
NOZZLE I.D. .330
ASSUMED MOISTURE, % 55%
SAMPLE BOX NUMBER Green
METER BOX NUMBER #86 Green
METER $\Delta H_@$ # 13 (0-2")
C FACTOR
PROBE HEATER SETTING 250°
HEATER BOX SETTING 250°
REFERENCE Δp # 4 (0-.50")

SCHEMATIC OF TRAVERSE POINT LAYOUT

READ AND RECORD ALL DATA EVERY 2½ MINUTES

Preleak ✓ < .007 cfm

Postleak ✓ < .005 cfm

TRAVERSE POINT NUMBER	SAMPLING TIME, min	CLOCK TIME (24-hr CLOCK)	GAS METER READING (V_m), ft^3	VELOCITY HEAD (Δp_s), in. H_2O	ORIFICE PRESSURE DIFFERENTIAL (ΔH), in. H_2O DESIRED	ORIFICE PRESSURE DIFFERENTIAL (ΔH), in. H_2O ACTUAL	STACK TEMPERATURE (T_s), °F	DRY GAS METER TEMPERATURE INLET ($T_{m\,in}$), °F	DRY GAS METER TEMPERATURE OUTLET ($T_{m\,out}$), °F	PUMP VACUUM, in. Hg	SAMPLE BOX TEMPERATURE, °F	IMPINGER TEMPERATURE, °F
	0	306	451.751									
1		308₃	452.640	.21	.48	.48	230	94	94		250	90
2	5	311	453.525	.19	.43	.43	234	94	94		275	90
3		313₃	454.420	.19	.43	.43	238	94	94		300	90
4	10	316	455.280	.19	.43	.43	235	94	94		299	90
5		318₃	456.130	.19	.43	.43	236	94	94		300	90
6	15	321	457.050	.20	.46	.46	238	98	92		290	90
7		323₃	459.970	.22	.50	.50	240	103	93		300	93
8	20	326	458.910	.17	.39	.40	240	104	94		295	95
9		328₃	459.845	.17	.39	.39	238	110	96		300	95
10	25	331	460.700	.15	.35	.35	239	112	98		300	97
11		333₃	461.455	.12	.28	.28	236	112	98		275	92
12	30	336	462.220	.11	.26	.26	227	103	98		280	92
1		338₃	463.100	.19	.44	.44	238	103	98		270	92
2	35	341	463.940	.17	.39	.39	237	104	98		285	92
3		343₃	464.830	.19	.44	.44	235	106	98		300	94
4	40	346	465.760	.19	.44	.44	237	106	98		270	88
5		348₃	466.645	.20	.46	.46	237	106	98		285	89
6	45	351	467.680	.21	.49	.49	237	107	99		300	90
7		353₃	468.570	.19	.44	.44	236	108	100		285	90
8	50	356	469.500	.18	.42	.42	233	108	100		275	90
9		358₃	470.375	.17	.40	.40	231	108	100		290	91
10	55	401	471.200	.15	.35	.35	230	108	100		290	90
11		403₃	471.960	.13	.31	.31	227	108	100		285	90
12	60	406	472.681	.11	.26	.26	226	108	100		300	90
			[illegible]	.173		.40	235		100			

COMMENTS:

VLC 24 + 635 = 659

A00003

DESICCATION OF SOLID SAMPLES TO CONSTANT WEIGHT

Cont.
Fryer
AB1 #1

Completion Dates
1. _____ 2. _____
3. _____ 4. _____
Indicate by numbers in box under Sample column.

Requestor _____
JN _____
Assigned to _____
Date Assigned _____

ALL WEIGHTS IN GRAMS

TARE WEIGHT				TARE + SAMPLE WEIGHT	
1. 100.4397	9.	Probe	71.8	1. 100.8575	9.
2. 100.4398	10.	SAMPLE NUMBER	FILTER OR CONTAINER #	2. 100.4769	10.
3. 100.4393	11.			3. 100.4760	11.
4.	12.	FILTER OR CONTAINER PLUS SAMPLE	100.4742	4. 100.4743	12.
5.	13.			5. 100.4743	13.
6.	14.	FILTER OR CONTAINER TARE	100.4396	6. 100.4740	14.
7.	15.	SAMPLE	~~0.0356~~	7.	15.
8.	16.		0.0346	8.	16.

1. 0.6049	9.	Filter	4.147	1. 0.5311	9.
2. 0.6049	10.	SAMPLE NUMBER	FILTER OR CONTAINER #	2. 0.5308	10.
3. 0.6049	11.			3. 0.5314	11.
4.	12.	FILTER OR CONTAINER PLUS SAMPLE	0.5308	4.	12.
5.	13.			5.	13.
6.	14.	FILTER OR CONTAINER TARE	0.6049	6.	14.
7.	15.	SAMPLE	~~-0.0741~~	7.	15.
8.	16.		-0.0758	8.	16.

1. 104.4507	9.	Imp I	58.8	1. 104.4528	9.
2. 104.4506	10.	SAMPLE NUMBER	FILTER OR CONTAINER #	2. 104.4500	10.
3. 104.4507	11.			3. 104.4513	11.
4.	12.	FILTER OR CONTAINER PLUS SAMPLE	104.4503	4. 104.4504	12.
5.	13.			5. 104.4506	13.
6.	14.	FILTER OR CONTAINER TARE	104.4507	6.	14.
7.	15.	SAMPLE	-0.0004	7.	15.
8.	16.			8.	16.

1. 94.7642	9.	Imp O	68.8	1. 94.8093	9.
2. 94.7630	10.	SAMPLE NUMBER	FILTER OR CONTAINER #	2. 94.8114	10.
3. 94.7629	11.			3. 94.8117	11.
4.	12.	FILTER OR CONTAINER PLUS SAMPLE	94.8115	4. 94.8114	12.
5.	13.			5.	13.
6.	14.	FILTER OR CONTAINER TARE	~~94.7636~~	6.	14.
7.	15.	SAMPLE	~~0.0479~~	7.	15.
8.	16.		0.0481	8.	16.

DESICCATION OF SOLID SAMPLES TO CONSTANT WEIGHT

Completion Dates
1. _____ 2. _____
3. _____ 4. _____
Indicate by numbers in box under Sample column.

Cont. Fryer
ABI #2

Requestor _____
JN _____
Assigned to _____
Date Assigned _____

ALL WEIGHTS IN GRAMS

TARE WEIGHT				TARE + SAMPLE WEIGHT	
1. 96.3636	9.	Probe	72.8	1. 96.3918	9.
2. 96.3643	10.	SAMPLE NUMBER	FILTER OR CONTAINER #	2. 96.3905	10.
3. 96.3639	11.			3. 96.3899	11.
4.	12.	FILTER OR CONTAINER PLUS SAMPLE	96.3900	4. 96.3896	12.
5.	13.	FILTER OR CONTAINER TARE	96.3640	5.	13.
6.	14.			6.	14.
7.	15.	SAMPLE	0.0260	7.	15.
8.	16.			8.	16.

1. 0.6085	9.	Filter	4.149	1. 0.5365	9.
2. 0.6087	10.	SAMPLE NUMBER	FILTER OR CONTAINER #	2. 0.5358	10.
3. 0.6086	11.			3. 0.5357	11.
4.	12.	FILTER OR CONTAINER PLUS SAMPLE	0.5360	4.	12.
5.	13.	FILTER OR CONTAINER TARE	0.6086	5.	13.
6.	14.			6.	14.
7.	15.	SAMPLE	-0.0726	7.	15.
8.	16.			8.	16.

1. 100.6787	9.	Imp I	53.8	1. 100.6799	9.
2. 100.6784	10.	SAMPLE NUMBER	FILTER OR CONTAINER #	2. 100.6790	10.
3. 100.6793	11.			3. 100.6787	11.
4.	12.	FILTER OR CONTAINER PLUS SAMPLE	100.6788	4. 100.6786	12.
5.	13.	FILTER OR CONTAINER TARE	100.6788	5.	13.
6.	14.			6.	14.
7.	15.	SAMPLE	Ø	7.	15.
8.	16.			8.	16.

1. 98.1090	9.	Imp O	70.8	1. 98.1317	9.
2. 98.1075	10.	SAMPLE NUMBER	FILTER OR CONTAINER #	2. 98.1337	10.
3. 98.1090	11.			3. 98.1336	11.
4.	12.	FILTER OR CONTAINER PLUS SAMPLE	98.1337	4. 98.1338	12.
5.	13.	FILTER OR CONTAINER TARE	98.1085	5.	13.
6.	14.			6.	14.
7.	15.	SAMPLE	00252	7.	15.
8.	16.			8.	16.

DESICCATION OF SOLID SAMPLES TO CONSTANT WEIGHT

Completion Dates
1. _____ 2. _____
3. _____ 4. _____
Indicate by numbers in box under Sample column.

ABI #3
Cont. Fryer

Requestor _____
JN _____
Assigned to _____
Date Assigned _____

ALL WEIGHTS IN GRAMS

TARE WEIGHT				TARE + SAMPLE WEIGHT	
1. 96.3199	9.	Probe	67.8	1. 96.3521	9.
2. 96.3192	10.	SAMPLE NUMBER	FILTER OR CONTAINER #	2. 96.3502	10.
3. 96.3191	11.			3. 96.3500	11.
4.	12.	FILTER OR CONTAINER PLUS SAMPLE	96.3500	4. 96.3498	12.
5.	13.	FILTER OR CONTAINER TARE	96.3194	5.	13.
6.	14.			6.	14.
7.	15.	SAMPLE	0.0306	7.	15.
8.	16.			8.	16.

1. 0.6095	9.	Filter	4.150	1. 0.6183	9.
2. 0.6095	10.	SAMPLE NUMBER	FILTER OR CONTAINER #	2. 0.6185	10.
3. 0.6094	11.			3. 0.6185	11.
4.	12.	FILTER OR CONTAINER PLUS SAMPLE	0.6184	4.	12.
5.	13.	FILTER OR CONTAINER TARE	0.6095	5.	13.
6.	14.			6.	14.
7.	15.	SAMPLE	0.0089	7.	15.
8.	16.			8.	16.

1. 99.0955	9.	Imp. I	55.8	1. 99.0960	9.
2. 99.0953	10.	SAMPLE NUMBER	FILTER OR CONTAINER #	2. 99.0951	10.
3. 99.0946	11.			3. 99.0950	11.
4.	12.	FILTER OR CONTAINER PLUS SAMPLE	99.0954	4.	12.
5.	13.	FILTER OR CONTAINER TARE	99.0951	5.	13.
6.	14.			6.	14.
7.	15.	SAMPLE	0.0003	7.	15.
8.	16.			8.	16.

1. 104.2416	9.	Imp O	69.8	1. 104.2632	9.
2. 104.2398	10.	SAMPLE NUMBER	FILTER OR CONTAINER #	2. 104.2624	10.
3. 104.2397	11.			3. 104.2634	11.
4.	12.	FILTER OR CONTAINER PLUS SAMPLE	104.2630	4.	12.
5.	13.	FILTER OR CONTAINER TARE	104.2404	5.	13.
6.	14.			6.	14.
7.	15.	SAMPLE	0.0226	7.	15.
8.	16.			8.	16.

TRAVERSE POINT LOCATION FOR CIRCULAR DUCTS

PLANT Eagle Snacks
DATE 10-11-90
SAMPLING LOCATION Tortilla Line
INSIDE OF FAR WALL TO
OUTSIDE OF NIPPLE, (DISTANCE A) 18"
INSIDE OF NEAR WALL TO
OUTSIDE OF NIPPLE, (DISTANCE B) Ø
STACK I.D., (DISTANCE A - DISTANCE B) 18"
NEAREST UPSTREAM DISTURBANCE 24" 1.33 dd
NEAREST DOWNSTREAM DISTURBANCE 108" " 6 dd
CALCULATOR

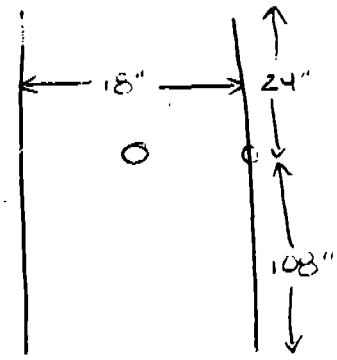

SCHEMATIC OF SAMPLING LOCATION

TRAVERSE POINT NUMBER	FRACTION OF STACK I.D.	STACK I.D.	PRODUCT OF COLUMNS 2 AND 3 (TO NEAREST 1/8 INCH)	DISTANCE B	TRAVERSE POINT LOCATION FROM OUTSIDE OF NIPPLE (SUM OF COLUMNS 4 & 5)
1	.026	18"	0.47	Ø	1.00"
2	.082		1.48		1.48"
3	.146		2.63		2.63"
4	.226		4.07		4.07"
5	.342		6.16		6.16"
6	.658		11.84		11.84"
7	.774		13.93		13.93"
8	.854		15.37		15.37"
9	.918		16.52		16.52"
10	.974		17.53		17.00"

FIELD DATA

PLANT Eagle Snacks
DATE 10-11-90
SAMPLING LOCATION Tortilla Line
SAMPLE TYPE Particulate
RUN NUMBER #4
OPERATOR Ty Hastriter
AMBIENT TEMPERATURE 60
BAROMETRIC PRESSURE 29.85
STATIC PRESSURE, (P_s) -.08
FILTER NUMBER (s) 4.150

#4

PROBE LENGTH AND TYPE #23
NOZZLE I.D. .325
ASSUMED MOISTURE, % 10%
SAMPLE BOX NUMBER Green
METER BOX NUMBER #86 Green
METER $\Delta H_@$ #13 (0-2")
C FACTOR
PROBE HEATER SETTING 250°
HEATER BOX SETTING 275°
REFERENCE Δp #2 (0-.50")

Prebak ✓ < .019 cfm

SCHEMATIC OF TRAVERSE POINT LAYOUT

READ AND RECORD ALL DATA EVERY 9 MINUTES

Postleak ✓ < .005 cfm

TRAVERSE POINT NUMBER	SAMPLING TIME, min	CLOCK TIME (24-hr CLOCK)	GAS METER READING (V_m), ft^3	VELOCITY HEAD (Δp_s), in. H_2O	ORIFICE PRESSURE DIFFERENTIAL (ΔH), in. H_2O DESIRED	ORIFICE PRESSURE DIFFERENTIAL (ΔH), in. H_2O ACTUAL	STACK TEMPERATURE (T_s), °F	DRY GAS METER TEMPERATURE INLET ($T_{m\ in}$), °F	DRY GAS METER TEMPERATURE OUTLET ($T_{m\ out}$), °F	PUMP VACUUM, in. Hg	SAMPLE BOX TEMPERATURE, °F	IMPINGER TEMPERATURE, °F
	0	841	477.535									
1	9	850	482.220	.12	.94	.94	177	60	60		275	60
2	18	859	487.065	.12	.96	.96	174	70	65		260	58
3	27	908	492.060	.13	1.04	1.04	179	78	66		275	58
4	36	917	497.425	.14	1.18	1.18	152	84	70		270	56
5	45	926	503.050	.16	1.36	1.36	178	90	76		260	52
6	54	935	508.310	.14	1.16	1.16	180	98	80		260	52
7	63	944	513.600	.13	1.08	1.08	181	100	84		225	52
8	72	953	518.840	.13	1.08	1.08	182	102	88		245	52
9	81	1002	523.970	.12	1.00	1.00	181	104	90		255	54
10	90	1011	528.865	.12	1.00	1.00	180	106	84		260	54
1	99	1020	534.180	.13	1.10	1.10	176	106	96		270	55
2	108	1029	539.420	.13	1.10	1.10	182	107	97		225	55
3	117	1038	544.945	.14	1.18	1.18	182	108	98		230	56
4	126	1047	550.440	.14	1.18	1.18	180	105	98		235	56
5	135	1056	556.320	.16	1.35	1.35	182	106	98		275	58
6	144	1105	562.130	.15	1.27	1.27	182	110	100		270	58
7	153	1114	567.900	.14	1.19	1.19	183	112	102		265	58
8	162	1123	572.890	.11	.94	.94	182	111	103		260	60
9	171	1132	577.870	.11	.94	.94	181	112	104		230	60
10	180	1141	582.634	.10	.85	.85	180	112	104		235	60
			105.099	.131		1.10	179	94				

COMMENTS:

EPA (Dur) 235

A00008

.005 ✓

FIELD DATA

PLANT Eagle Snacks
DATE 10-11-90
SAMPLING LOCATION Tortilla Line
SAMPLE TYPE Particulate
RUN NUMBER #5
OPERATOR Ty Hastriter
AMBIENT TEMPERATURE 90°
BAROMETRIC PRESSURE 29.85
STATIC PRESSURE, (P_s) .08
FILTER NUMBER (s) 4.148

#5

PROBE LENGTH AND TYPE #23
NOZZLE I.D. .325
ASSUMED MOISTURE, % 10%
SAMPLE BOX NUMBER Green
METER BOX NUMBER #86 Green
METER $\Delta H_@$ # 13 (0-2")
C FACTOR
PROBE HEATER SETTING 250
HEATER BOX SETTING 250
REFERENCE Δp # 2 (0-.50)

063@19 sec

SCHEMATIC OF TRAVERSE POINT LAYOUT

READ AND RECORD ALL DATA EVERY 9 MINUTES

Preleak ✓ < .010 cfm

Post Leak ✓ < .005 cfm

TRAVERSE POINT NUMBER	SAMPLING TIME, min	CLOCK TIME (24-hr CLOCK)	GAS METER READING (V_m), ft³	VELOCITY HEAD (Δp_s), in. H_2O	ORIFICE PRESSURE DIFFERENTIAL (ΔH), in. H_2O DESIRED	ORIFICE PRESSURE DIFFERENTIAL (ΔH), in. H_2O ACTUAL	STACK TEMPERATURE (T_s), °F	DRY GAS METER TEMPERATURE INLET ($T_{m\,in}$), °F	DRY GAS METER TEMPERATURE OUTLET ($T_{m\,out}$), °F	PUMP VACUUM, in. Hg	SAMPLE BOX TEMPERATURE, °F	IMPINGER TEMPERATURE, °F
	0	1231	585.454									
1	9	1240	590.675	.13	1.10	1.10	178	104	102		240	80
2	18	1249	596.030	.13	1.10	1.10	183	104	105		275	76
3	27	1258	601.500	.13	1.11	1.11	184	113	107		250	70
4	36	107	607.020	.13	1.22	1.22	127	116	108		240	68
5	45	116	613.060	.15	1.41	1.41	129	120	110		225	66
6	54	125	618.800	.13	1.23	1.23	130	124	112		240	66
7	63	134	624.450	.13	1.22	1.22	132	122	114		260	66
8	72	143	629.900	.12	1.13	1.13	133	122	114		275	66
9	81	152	635.590	.13	1.22	1.22	131	123	114		250	68
10	90	201	641.330	.13	1.23	1.23	129	120	114		245	68
1	99	210	647.360	.15	1.42	1.42	127	120	114		250	68
2	108	219	653.270	.14	1.33	1.33	126	124	114		275	68
3	117	228	659.170	.14	1.32	1.32	133	125	115		275	68
4	126	237	665.065	.14	1.33	1.33	130	125	116		275	68
5	135	246	671.315	.16	1.51	1.51	133	124	116		280	68
6	144	255	677.240	.14	1.33	1.33	128	124	116		230	66
7	153	304	682.975	.13	1.25	1.25	123	125	116		250	66
8	162	313	688.540	.12	1.15	1.15	124	127	119		230	66
9	171	322	694.050	.12	1.15	1.15	128	126	120		275	68
10	180	331	699.230	.10	.97	.97	120	126	120		250	70
			113.776	.132		1.24	136		117			

COMMENTS:

VLC 27 + 399 = 426

EPA (Dur) 235

A00009

FIELD DATA

PLANT Eagle Stacks
DATE 10-12-90
SAMPLING LOCATION Tortilla Line
SAMPLE TYPE Particulate
RUN NUMBER #6
OPERATOR Ty Hastriter
AMBIENT TEMPERATURE 61°
BAROMETRIC PRESSURE 29.85
STATIC PRESSURE, (P_s) -.08
FILTER NUMBER (s) 4

#6

PROBE LENGTH AND TYPE #23
NOZZLE I.D. .325
ASSUMED MOISTURE, % 10%
SAMPLE BOX NUMBER Green
METER BOX NUMBER #86 Green
METER $\Delta H_@$ #13 (0-2")
C FACTOR
PROBE HEATER SETTING 250
HEATER BOX SETTING 250
REFERENCE Δp #2 (0-.50")

08 @ 14 sec

SCHEMATIC OF TRAVERSE POINT LAYOUT

READ AND RECORD ALL DATA EVERY 9 MINUTES

Preleak ✓< .010 cfm

Postleak ✓< cfm

TRAVERSE POINT NUMBER	SAMPLING TIME, min	CLOCK TIME (24-hr CLOCK)	GAS METER READING (V_m), ft^3	VELOCITY HEAD (Δp_s), in. H_2O	ORIFICE PRESSURE DIFFERENTIAL (ΔH), in. H_2O DESIRED	ORIFICE PRESSURE DIFFERENTIAL (ΔH), in. H_2O ACTUAL	STACK TEMPERATURE (T_s), °F	DRY GAS METER TEMPERATURE INLET ($T_{m\ in}$), °F	DRY GAS METER TEMPERATURE OUTLET ($T_{m\ out}$), °F	PUMP VACUUM, in. Hg	SAMPLE BOX TEMPERATURE, °F	IMPINGER TEMPERATURE, °F
	0	800	708.417									
1	9	809	713.305	.13	1.04	1.04	170	62	60		280	60
2	18	818	718.095	.12	.95	.95	175	66	60		275	58
3	27	827	723.120	.13	1.04	1.04	175	76	64		225	56
4	36	836	728.380	.14	1.14	1.14	175	84	68		275	58
5	45	845	733.830	.15	1.23	1.23	174	84	72		280	60
6	54	854	738.800	.12	.99	.99	173	88	74		255	60
7	63	903	743.680	.12	.99	.99	173	90	78		235	60
8	72	912	748.700	.12	1.00	1.00	173	92	80		240	60
9	81	921	753.500	.11	.92	.92	172	96	84		255	61
10	90	930	758.100	.10	.84	.84	172	97	87		275	61
1	99	939	763.300	.13	1.10	1.10	171	98	88		275	61
2	108	948	768.725	.14	1.18	1.18	173	98	90		280	61
3	117	957	774.110	.14	1.18	1.18	173	102	90		225	62
4	126	1006	779.765	.15	1.27	1.27	174	100	92		240	62
5	35	1015	785.770	.17	1.44	1.44	173	101	93		255	56
6	144	1024	791.425	.15	1.27	1.27	174	102	94		275	58
7	53	1033	796.905	.14	1.19	1.19	173	104	96		280	58
8	162	1042	802.035	.12	1.02	1.02	173	104	96		270	58
9	171	1051	806.945	.11	.94	.94	172	105	97		235	58
10	180	1100	811.858	.11	.94	.94	173	105	99		250	60
			103.441	.129		1.08	173	88				

COMMENTS:

294 + 31 grams = 325 vlc

EPA (Dur) 235

A00010

DESICCATION OF SOLID SAMPLES TO CONSTANT WEIGHT

Completion Dates
1. _____ 2. _____
3. _____ 4. _____
Indicate by numbers in box under Sample column.

ABI
Tortilla #4

Requestor _____
JN _____
Assigned to _____
Date Assigned _____

ALL WEIGHTS IN GRAMS

TARE WEIGHT				TARE + SAMPLE WEIGHT	
1. 101.7693	9.	Probe	64.8	1. 101.7942	9.
2. 101.7689	10.	SAMPLE NUMBER	FILTER OR CONTAINER #	2. 101.7929	10.
3. 101.7688	11.			3. 101.7930	11.
4.	12.	FILTER OR CONTAINER PLUS SAMPLE	101.7927	4. 101.7921	12.
5.	13.	FILTER OR CONTAINER TARE	101.7690	5.	13.
6.	14.			6.	14.
7.	15.	SAMPLE	0.0237	7.	15.
8.	16.			8.	16.

1. 0.6070	9.	Filter	4.148	1. 0.6096	9.
2. 0.6070	10.	SAMPLE NUMBER	FILTER OR CONTAINER #	2. 0.6098	10.
3. 0.6070	11.			3. 0.6101	11.
4.	12.	FILTER OR CONTAINER PLUS SAMPLE	0.6098	4.	12.
5.	13.	FILTER OR CONTAINER TARE	0.6070	5.	13.
6.	14.			6.	14.
7.	15.	SAMPLE	0.0028	7.	15.
8.	16.			8.	16.

1. 102.7677	9.	Imp I	52.8	1. 102.7673	9.
2. 102.7678	10.	SAMPLE NUMBER	FILTER OR CONTAINER #	2. 102.7670	10.
3. 102.7670	11.			3. 102.7664	11.
4.	12.	FILTER OR CONTAINER PLUS SAMPLE	102.7669	4.	12.
5.	13.	FILTER OR CONTAINER TARE	102.7675	5.	13.
6.	14.			6.	14.
7.	15.	SAMPLE	-0.0006	7.	15.
8.	16.			8.	16.

1. 97.1649	9.	Imp O	66.8	1. 97.1848	9.
2. 97.1666	10.	SAMPLE NUMBER	FILTER OR CONTAINER #	2. 97.1817	10.
3. 97.1663	11.			3. 97.1817	11.
4.	12.	FILTER OR CONTAINER PLUS SAMPLE	97.1815	4. 97.1811	12.
5.	13.	FILTER OR CONTAINER TARE	97.1659	5.	13.
6.	14.			6.	14.
7.	15.	SAMPLE	0.0156	7.	15.
8.	16.			8.	16.

DESICCATION OF SOLID SAMPLES TO CONSTANT WEIGHT

Completion Dates
1. _____ 2. _____
3. _____ 4. _____
Indicate by numbers in box under Sample column.

ABI
Tortilla #5

Requestor _____
JN _____
Assigned to _____
Date Assigned _____

ALL WEIGHTS IN GRAMS

TARE WEIGHT				TARE + SAMPLE WEIGHT	
1. 101.2198	9.	Probe	62.8	1. 101.2418	9.
2. 101.2200	10.	SAMPLE NUMBER	FILTER OR CONTAINER #	2. 101.2404	10.
3. 101.2199	11.	FILTER OR CONTAINER PLUS SAMPLE	101.2405	3. 101.2406	11.
4.	12.	FILTER OR CONTAINER TARE	101.2199	4. 101.2406	12.
5.	13.	SAMPLE	0.0206	5.	13.
6.	14.			6.	14.
7.	15.			7.	15.
8.	16.			8.	16.

1. 0.6046	9.	Filter	4.146	1. 0.6121	9.
2. 0.6048	10.	SAMPLE NUMBER	FILTER OR CONTAINER #	2. 0.6123	10.
3. 0.6045	11.	FILTER OR CONTAINER PLUS SAMPLE	0.6124	3. 0.6129	11.
4.	12.	FILTER OR CONTAINER TARE	~~0.6047~~ 0.6046	4.	12.
5.	13.	SAMPLE	~~0.0077~~ 0.0078	5.	13.
6.	14.			6.	14.
7.	15.			7.	15.
8.	16.			8.	16.

1. 102.3676	9.	Imp O	61.8	1. 102.4002	9.
2. 102.3674	10.	SAMPLE NUMBER	FILTER OR CONTAINER #	2. 102.4022	10.
3. 102.3677	11.	FILTER OR CONTAINER PLUS SAMPLE	102.4024	3. 102.4024	11.
4.	12.	FILTER OR CONTAINER TARE	102.3676	4. 102.4026	12.
5.	13.	SAMPLE	0.0348	5.	13.
6.	14.			6.	14.
7.	15.			7.	15.
8.	16.			8.	16.

1. 96.6508	9.	Imp I	50.8	1. 96.6511	9.
2. 96.6509	10.	SAMPLE NUMBER	FILTER OR CONTAINER #	2. 96.6501	10.
3. 96.6509	11.	FILTER OR CONTAINER PLUS SAMPLE	96.6506	3. 96.6506	11.
4.	12.	FILTER OR CONTAINER TARE	96.6509	4.	12.
5.	13.	SAMPLE	-0.0003	5.	13.
6.	14.			6.	14.
7.	15.			7.	15.
8.	16.			8.	16.

DESICCATION OF SOLID SAMPLES TO CONSTANT WEIGHT

Completion Dates
1. _____ 2. _____
3. _____ 4. _____
Indicate by numbers in box under Sample column.

ABI
Tortilla #6

Requestor _____
JN _____
Assigned to _____
Date Assigned _____

ALL WEIGHTS IN GRAMS

TARE WEIGHT				TARE + SAMPLE WEIGHT	
1. 102.7333	9.	Probe	59.8	1. 102.7542	9.
2. 102.7322	10.	SAMPLE NUMBER	FILTER OR CONTAINER #	2. 102.7525	10.
3. 102.7322	11.			3. 102.7532	11.
4.	12.	FILTER OR CONTAINER PLUS SAMPLE	~~102.7537~~	4. 102.7532	12.
5.	13.	FILTER OR CONTAINER TARE	~~102.7326~~	5.	13.
6.	14.			6.	14.
7.	15.	SAMPLE	~~0.0211~~	7.	15.
8.	16.			8.	16.

1. 0.5215	9.	Filter	4.141	1. 0.6113	9.
2. 0.5212	10.	SAMPLE NUMBER	FILTER OR CONTAINER #	2. 0.6110	10.
3. 0.5206	11.			3. 0.6112	11.
4.	12.	FILTER OR CONTAINER PLUS SAMPLE	0.6112	4.	12.
5.	13.	FILTER OR CONTAINER TARE	0.5211	5.	13.
6.	14.			6.	14.
7.	15.	SAMPLE	0.0901	7.	15.
8.	16.			8.	16.

1. 98.1090	9.	Imp O	70.8	1.	9.
2. 98.1075	10.	SAMPLE NUMBER	FILTER OR CONTAINER #	2.	10.
3. 98.1090	11.			3.	11.
4.	12.	FILTER OR CONTAINER PLUS SAMPLE		4.	12.
5.	13.	FILTER OR CONTAINER TARE	98.1085	5.	13.
6.	14.			6.	14.
7.	15.	SAMPLE		7.	15.
8.	16.			8.	16.

1. 104.2990	9.	Imp I	49.8	1. 104.2991	9.
2. 104.3002	10.	SAMPLE NUMBER	FILTER OR CONTAINER #	2. 104.2973	10.
3. 104.3000	11.			3. 104.2974	11.
4.	12.	FILTER OR CONTAINER PLUS SAMPLE	104.2975 ~~104.2997~~	4. 104.2985	12.
5.	13.	FILTER OR CONTAINER TARE	104.2997	5. 104.2978	13.
6.	14.			6.	14.
7.	15.	SAMPLE	~~0.0020~~ -0.0022	7.	15.
8.	16.			8.	16.

A00013

FIELD DATA

PLANT Eagle Snacks
DATE 10-10-90
SAMPLING LOCATION - Fryer
SAMPLE TYPE Part 512
RUN NUMBER #1
OPERATOR Rooney
AMBIENT TEMPERATURE 80
BAROMETRIC PRESSURE 29.85
STATIC PRESSURE, (P_s) -.50
FILTER NUMBER (s) A-1

PROBE LENGTH AND TYPE
NOZZLE I.D. ~~.250~~ .390
ASSUMED MOISTURE, %
SAMPLE BOX NUMBER
METER BOX NUMBER
METER $\Delta H_@$
C FACTOR
PROBE HEATER SETTING
HEATER BOX SETTING
REFERENCE Δp

Pre leak <.05 cfm

SCHEMATIC OF TRAVERSE POINT LAYOUT

READ AND RECORD ALL DATA EVERY _____ MINUTES

TRAVERSE POINT NUMBER	SAMPLING TIME, min / CLOCK TIME (24-hr CLOCK)	GAS METER READING (V_m), ft^3	VELOCITY HEAD (Δp_s), in. H_2O	ORIFICE PRESSURE DIFFERENTIAL (ΔH), in. H_2O DESIRED	ORIFICE PRESSURE DIFFERENTIAL (ΔH), in. H_2O ACTUAL	STACK TEMPERATURE (T_s), °F	DRY GAS METER TEMPERATURE INLET ($T_{m\ in}$), °F	DRY GAS METER TEMPERATURE OUTLET ($T_{m\ out}$), °F	PUMP VACUUM, in. Hg	SAMPLE BOX TEMPERATURE, °F	IMPINGER TEMPERATURE, °F
	953	435.500									
	1016	445.619			1.15		63	70	17		
					.57						
		10.119			.86		67				

COMMENTS:

VLC 369

EPA (Dur) 235
4 72

A00014

FIELD DATA

PLANT Eagle Stacks
DATE
SAMPLING LOCATION
SAMPLE TYPE Part. size
RUN NUMBER
OPERATOR
AMBIENT TEMPERATURE
BAROMETRIC PRESSURE
STATIC PRESSURE, (P_s)
FILTER NUMBER (s) A-2

#2

PROBE LENGTH AND TYPE
NOZZLE I.D.
ASSUMED MOISTURE, %
SAMPLE BOX NUMBER
METER BOX NUMBER
METER $\Delta H_@$
C FACTOR
PROBE HEATER SETTING
HEATER BOX SETTING
REFERENCE Δp

Preleak ✓ .02 cfm at 23"

SCHEMATIC OF TRAVERSE POINT LAYOUT

READ AND RECORD ALL DATA EVERY _____ MINUTES

Postleak ✓ < .017 cfm at 23"

TRAVERSE POINT NUMBER	SAMPLING TIME, min / CLOCK TIME (24-hr CLOCK)	GAS METER READING (V_m), ft^3	VELOCITY HEAD (Δp_s), in. H_2O	ORIFICE PRESSURE DIFFERENTIAL (ΔH), in. H_2O		STACK TEMPERATURE (T_s), °F	DRY GAS METER TEMPERATURE		PUMP VACUUM, in. Hg	SAMPLE BOX TEMPERATURE, °F	IMPINGER TEMPERATURE, °F
				DESIRED	ACTUAL		INLET ($T_{m\ in}$), °F	OUTLET ($T_{m\ out}$), °F			
	1252	446.044									
	120	455.544		.50			72	84			
							76	84			
		9.500		.50			79				

COMMENTS:

VLC 206

EPA (Dur) 235
4/72

A00015

.022 - 22

FIELD DATA

PLANT _____
DATE _____
SAMPLING LOCATION _____
SAMPLE TYPE _____
RUN NUMBER _____
OPERATOR _____
AMBIENT TEMPERATURE _____
BAROMETRIC PRESSURE _____
STATIC PRESSURE, (P_s) _____
FILTER NUMBER (s) A-3

PROBE LENGTH AND TYPE _____
NOZZLE I.D. _____
ASSUMED MOISTURE, % _____
SAMPLE BOX NUMBER _____
METER BOX NUMBER _____
METER $\Delta H_@$ _____
C FACTOR _____
PROBE HEATER SETTING _____
HEATER BOX SETTING _____
REFERENCE Δp _____

Preleak ✓ < .015 cfm

SCHEMATIC OF TRAVERSE POINT LAYOUT

READ AND RECORD ALL DATA EVERY _____ MINUTES

Postleak ✓ < .030

TRAVERSE POINT NUMBER	SAMPLING TIME, min / CLOCK TIME (24-hr CLOCK)	GAS METER READING (V_m), ft^3	VELOCITY HEAD (Δp_s), in. H_2O	ORIFICE PRESSURE DIFFERENTIAL (ΔH), in. H_2O DESIRED	ORIFICE PRESSURE DIFFERENTIAL (ΔH), in. H_2O ACTUAL	STACK TEMPERATURE (T_s), °F	DRY GAS METER TEMPERATURE INLET ($T_{m\ in}$), °F	DRY GAS METER TEMPERATURE OUTLET ($T_{m\ out}$), °F	PUMP VACUUM, in. Hg	SAMPLE BOX TEMPERATURE, °F	IMPINGER TEMPERATURE, °F
	338	456.300									
	405	466.145		.50			76	86			
		9.845		.5			81				

COMMENTS:

VLC 291

EPA (Dur) 235
4/72

A00016

FIELD DATA

PLANT Eagle Stacks
DATE 10-11-90
SAMPLING LOCATION Tortilla Line
SAMPLE TYPE Part. Sizing #4
RUN NUMBER #4
OPERATOR Ty Hastriter
AMBIENT TEMPERATURE 76°
BAROMETRIC PRESSURE 29.85
STATIC PRESSURE, (P_s)
FILTER NUMBER (s) #-4

PROBE LENGTH AND TYPE
NOZZLE I.D. .32
ASSUMED MOISTURE, %
SAMPLE BOX NUMBER
METER BOX NUMBER #88-700297
METER $\Delta H_@$ #7 (0-2")
C FACTOR
PROBE HEATER SETTING
HEATER BOX SETTING
REFERENCE Δp

SCHEMATIC OF TRAVERSE POINT LAYOUT

Preleak < .005 cfm at 23"

READ AND RECORD ALL DATA EVERY _____ MINUTES

Postleak < .010 cfm

TRAVERSE POINT NUMBER	SAMPLING TIME, min / CLOCK TIME (24-hr CLOCK)	GAS METER READING (V_m), ft^3	VELOCITY HEAD (Δp_s), in. H_2O	ORIFICE PRESSURE DIFFERENTIAL (ΔH), in. H_2O DESIRED	ORIFICE PRESSURE DIFFERENTIAL (ΔH), in. H_2O ACTUAL	STACK TEMPERATURE (T_s), °F	DRY GAS METER TEMPERATURE INLET ($T_{m\ in}$), °F	DRY GAS METER TEMPERATURE OUTLET ($T_{m\ out}$), °F	PUMP VACUUM, in. Hg	SAMPLE BOX TEMPERATURE, °F	IMPINGER TEMPERATURE, °F
	1012	468.947									
	1022	472.355		~~.40~~	.40		72	80	11		
	1048	482.635			.40		74	76	11		
	1103	488.000			.40		74	76	6		
	1119	493.435			.42		74	76	5		
	1137	499.242			.38		76	81	7		
					.36		80	86	7		
		30.295			.39			.77			

COMMENTS:

VLC 101

EPA (Dur) 235

A00017

FIELD DATA

PLANT _____
DATE _____
SAMPLING LOCATION _____
SAMPLE TYPE _____
RUN NUMBER _____
OPERATOR _____
AMBIENT TEMPERATURE _____
BAROMETRIC PRESSURE _____
STATIC PRESSURE, (P_s) _____
FILTER NUMBER (s) _____

#5 part. sizing

PROBE LENGTH AND TYPE _____
NOZZLE I.D. _____
ASSUMED MOISTURE, % _____
SAMPLE BOX NUMBER _____
METER BOX NUMBER _____
METER $\Delta H_@$ _____
C FACTOR _____
PROBE HEATER SETTING _____
HEATER BOX SETTING _____
REFERENCE Δp _____

Prelink ✓ < .02 cfm at 23"

SCHEMATIC OF TRAVERSE POINT LAYOUT

READ AND RECORD ALL DATA EVERY _____ MINUTES

Postlink ✓ < .010 cfm at 23"

TRAVERSE POINT NUMBER	SAMPLING TIME, min	CLOCK TIME (24-hr CLOCK)	GAS METER READING (V_m), ft^3	VELOCITY HEAD (Δp_s), in. H_2O	ORIFICE PRESSURE DIFFERENTIAL (ΔH), in. H_2O DESIRED	ORIFICE PRESSURE DIFFERENTIAL (ΔH), in. H_2O ACTUAL	STACK TEMPERATURE (T_s), °F	DRY GAS METER TEMPERATURE INLET ($T_{m\,in}$), °F	DRY GAS METER TEMPERATURE OUTLET ($T_{m\,out}$), °F	PUMP VACUUM, in. Hg	SAMPLE BOX TEMPERATURE, °F	IMPINGER TEMPERATURE, °F
	0	204	499.454									
	23	227	507.000		.40			86	98	5		
	35	239	510.945		.40			88	104	10		
	52	256	516.525		.37			88	102	9		
	73	317	523.890		.42			88	98	10		
	88	332	529.384		.42			88	97	10		
			29.930		.40			94				

COMMENTS:

VLC 152

EPA (Dur) 235
4 72

A00018

FIELD DATA

PLANT Eagle Snacks
DATE 10-12-90
SAMPLING LOCATION Tortilla Line
SAMPLE TYPE Part. Sizing
RUN NUMBER #6
OPERATOR Ty Hastriter
AMBIENT TEMPERATURE 68°
BAROMETRIC PRESSURE 29.85
STATIC PRESSURE, (P_s)
FILTER NUMBER (s) A-6

#6

PROBE LENGTH AND TYPE S steel
NOZZLE I.D.
ASSUMED MOISTURE, % 10%
SAMPLE BOX NUMBER
METER BOX NUMBER #8B-700297
METER $\Delta H_@$ #7 (0-2")
C FACTOR
PROBE HEATER SETTING
HEATER BOX SETTING
REFERENCE Δp

~~015 @ 19 in~~
035 @ 59

SCHEMATIC OF TRAVERSE POINT LAYOUT

READ AND RECORD ALL DATA EVERY _____ MINUTES

Preleak v< .015 cfm at 23"

Postleak v< .040 cfm at 24"

TRAVERSE POINT NUMBER	SAMPLING TIME, min	CLOCK TIME (24-hr CLOCK)	GAS METER READING (V_m), ft^3	VELOCITY HEAD (Δp_s), in. H_2O	ORIFICE PRESSURE DIFFERENTIAL (ΔH), in. H_2O DESIRED	ORIFICE PRESSURE DIFFERENTIAL (ΔH), in. H_2O ACTUAL	STACK TEMPERATURE (T_s), °F	DRY GAS METER TEMPERATURE INLET ($T_{m\ in}$), °F	DRY GAS METER TEMPERATURE OUTLET ($T_{m\ out}$), °F	PUMP VACUUM, in. Hg	SAMPLE BOX TEMPERATURE, °F	IMPINGER TEMPERATURE, °F
	0	932	529.577							5		
	12	944	534.085		.40	.50		66	70	~~10~~		
	35	1007	542.560		.40	.30		66	72	10		
	53	1025	549.510		.40	.45		66	74	11		
	72	1044	557.840		.40	.51		73	80	10		
	80	1052	561.000		.40	.50		74	84	6		
	82	1054	561.874		.40	.50		74	84	6		
			32.297			.46			74			

COMMENTS:

8 limits + 16 grams = 97 vlc

EPA (Dur) 235

A000019

DESICCATION OF SOLID SAMPLES TO CONSTANT WEIGHT

Completion Dates
1. _____ 2. _____
3. _____ 4. _____

Indicate by numbers in box under Sample column.

ABI
Particle Sizing
Fryer

Requestor _____
JN _____
Assigned to _____
Date Assigned _____

ALL WEIGHTS IN GRAMS

TARE WEIGHT				TARE + SAMPLE WEIGHT	
1. 97.4282	9.	Fryer #1	57.8	1. 97.5976	9.
2. 97.4287	10.	SAMPLE NUMBER	FILTER OR CONTAINER #	2. 97.6120	10.
3.	11.			3. 97.6156	11.
4.	12.	FILTER OR CONTAINER PLUS SAMPLE	97.6122	4. 97.6121	12.
5.	13.	FILTER OR CONTAINER TARE	97.4285	5. 97.6125	13.
6.	14.			6.	14.
7.	15.	SAMPLE	0.1837	7.	15.
8.	16.			8.	16.

1. 105.4745	9.	Fryer #2	63.8	1. 105.5068	9.
2. 105.4741	10.	SAMPLE NUMBER	FILTER OR CONTAINER #	2. 105.5106	10.
3.	11.			3. 105.5109	11.
4.	12.	FILTER OR CONTAINER PLUS SAMPLE	105.5[illegible]	4. 105.5091	12.
5.	13.	FILTER OR CONTAINER TARE	105.4743	5. 105.5096	13.
6.	14.			6. 105.5099	14.
7.	15.	SAMPLE	[illegible]	7.	15.
8.	16.			8.	16.

1. 102.9634	9.	Fryer #3	60.8	1. 103.0025	9.
2. 102.9624	10.	SAMPLE NUMBER	FILTER OR CONTAINER #	2. 103.0034	10.
3.	11.			3. 103.0035	11.
4.	12.	FILTER OR CONTAINER PLUS SAMPLE	103.0031	4.	12.
5.	13.	FILTER OR CONTAINER TARE	102.9629	5.	13.
6.	14.			6.	14.
7.	15.	SAMPLE	0.0402	7.	15.
8.	16.			8.	16.

1.	9.			1.	9.
2.	10.	SAMPLE NUMBER	FILTER OR CONTAINER #	2.	10.
3.	11.			3.	11.
4.	12.	FILTER OR CONTAINER PLUS SAMPLE		4.	12.
5.	13.	FILTER OR CONTAINER TARE		5.	13.
6.	14.			6.	14.
7.	15.	SAMPLE		7.	15.
8.	16.			8.	16.

DESICCATION OF SOLID SAMPLES TO CONSTANT WEIGHT

Completion Dates
1. _____ 2. _____
3. _____ 4. _____
Indicate by numbers in box under Sample column.

ABF
Particle Sizing

Requestor _____
JN _____
Assigned to _____
Date Assigned _____

ALL WEIGHTS IN GRAMS

TARE WEIGHT				TARE + SAMPLE WEIGHT	
1. 100.7692	9.	Chip #4	54.3	1. 100.7813	9.
2. 100.7693	10.	SAMPLE NUMBER	FILTER OR CONTAINER #	2. 100.7811	10.
3.	11.			3. 100.7808	11.
4.	12.	FILTER OR CONTAINER PLUS SAMPLE	[illegible]	4.	12.
5.	13.	FILTER OR CONTAINER TARE	100.7693	5.	13.
6.	14.			6.	14.
7.	15.	SAMPLE	[illegible]	7.	15.
8.	16.			8.	16.

1. 103.7317	9.	Chip #5	48.8	1. 103.7590	9.
2. 103.7319	10.	SAMPLE NUMBER	FILTER OR CONTAINER #	2. 103.7599	10.
3.	11.			3. 103.7605	11.
4.	12.	FILTER OR CONTAINER PLUS SAMPLE	[illegible]	4. 103.7600	12.
5.	13.	FILTER OR CONTAINER TARE	103.7318	5.	13.
6.	14.			6.	14.
7.	15.	SAMPLE	[illegible]	7.	15.
8.	16.			8.	16.

1. 89.3222	9.	Chip #6	51.8	1. 89.3405	9.
2. 89.3222	10.	SAMPLE NUMBER	FILTER OR CONTAINER #	2. 89.3404	10.
3.	11.			3. 89.3406	11.
4.	12.	FILTER OR CONTAINER PLUS SAMPLE	89.3405	4.	12.
5.	13.	FILTER OR CONTAINER TARE	89.3222	5.	13.
6.	14.			6.	14.
7.	15.	SAMPLE	0.0183	7.	15.
8.	16.			8.	16.

1.	9.			1.	9.
2.	10.	SAMPLE NUMBER	FILTER OR CONTAINER #	2.	10.
3.	11.			3.	11.
4.	12.	FILTER OR CONTAINER PLUS SAMPLE		4.	12.
5.	13.	FILTER OR CONTAINER TARE		5.	13.
6.	14.			6.	14.
7.	15.	SAMPLE		7.	15.
8.	16.			8.	16.

DESICCATION OF SOLID SAMPLES TO CONSTANT WEIGHT

Completion Dates
1. _____ 2. _____
3. _____ 4. _____
Indicate by numbers in box under Sample column.

ABF PS
Cont #1
FRYER A-1

Requestor _____
JN _____
Assigned to _____
Date Assigned _____

ALL WEIGHTS IN GRAMS

TARE WEIGHT				TARE + SAMPLE WEIGHT		
1. 1516	9.	SAMPLE NUMBER	S-1 FILTER OR CONTAINER #	1. 1507	9.	
2. 1515	10.			2. 1507	10.	
3. 1515	11.	FILTER OR CONTAINER PLUS SAMPLE		3. 1505	11.	
4.	12.			4.	12.	
5.	13.	FILTER OR CONTAINER TARE		5.	13.	
6.	14.			6.	14.	
7.	15.	SAMPLE	Ø	7.	15.	
8.	16.			8.	16.	0.0
1. 1376	9.	SAMPLE NUMBER	S-2 FILTER OR CONTAINER #	1. 1356	9.	
2. 1376	10.			2. 1357	10.	
3. 1376	11.	FILTER OR CONTAINER PLUS SAMPLE		3. 1356	11.	
4.	12.			4.	12.	
5.	13.	FILTER OR CONTAINER TARE		5.	13.	
6.	14.			6.	14.	
7.	15.	SAMPLE	Ø	7.	15.	
8.	16.			8.	16.	0.0
1. 1511	9.	SAMPLE NUMBER	S-3 FILTER OR CONTAINER #	1. 1498	9.	
2. 1511	10.			2. 1497	10.	
3. 1511	11.	FILTER OR CONTAINER PLUS SAMPLE		3. 1490	11.	
4.	12.			4.	12.	
5.	13.	FILTER OR CONTAINER TARE		5.	13.	
6.	14.			6.	14.	
7.	15.	SAMPLE	Ø	7.	15.	
8.	16.			8.	16.	0.0
1. 1372	9.	SAMPLE NUMBER	S-4 FILTER OR CONTAINER #	1. 1378	9.	
2. 1371	10.			2. 1374	10.	
3. 1373	11.	FILTER OR CONTAINER PLUS SAMPLE		3. 1372	11.	
4.	12.			4.	12.	
5.	13.	FILTER OR CONTAINER TARE		5.	13.	
6.	14.			6.	14.	
7.	15.	SAMPLE		7.	15.	
8.	16.			8.	16.	0.0

DESICCATION OF SOLID SAMPLES TO CONSTANT WEIGHT

Completion Dates
1. _____ 2. _____
3. _____ 4. _____
Indicate by numbers in box under Sample column.

ABT PS #1
A-1

Requestor _____
JN _____
Assigned to _____
Date Assigned _____

ALL WEIGHTS IN GRAMS

TARE WEIGHT				TARE + SAMPLE WEIGHT	
1. .1511	9.		S-5	1. .1508	9.
2. .1512	10.	SAMPLE NUMBER	FILTER OR CONTAINER #	2. .1509	10.
3. .1510	11.	FILTER OR CONTAINER PLUS SAMPLE		3. .1506	11.
4.	12.			4.	12.
5.	13.	FILTER OR CONTAINER TARE		5.	13.
6.	14.			6.	14.
7.	15.	SAMPLE	Ø	7.	15.
8.	16.			8.	16.

00

1. .1377	9.		S-6	1. .1385	9.
2. .1377	10.	SAMPLE NUMBER	FILTER OR CONTAINER #	2. .1388	10.
3. .1377	11.	FILTER OR CONTAINER PLUS SAMPLE	.1386	3. .1389	11.
4.	12.			4.	12.
5.	13.	FILTER OR CONTAINER TARE	.1377	5.	13.
6.	14.			6.	14.
7.	15.	SAMPLE	.0009	7.	15.
8.	16.			8.	16.

9

1. .1519	9.		S-7	1. .1510	9.
2. .1519	10.	SAMPLE NUMBER	FILTER OR CONTAINER #	2. .1511	10.
3. .1519	11.	FILTER OR CONTAINER PLUS SAMPLE		3. .1500	11.
4.	12.			4.	12.
5.	13.	FILTER OR CONTAINER TARE		5.	13.
6.	14.			6.	14.
7.	15.	SAMPLE	Ø	7.	15.
8.	16.			8.	16.

0.

1. .1378	9.		S-8	1. .1238	9.
2. .1377	10.	SAMPLE NUMBER	FILTER OR CONTAINER #	2. .1237	10.
3. .1377	11.	FILTER OR CONTAINER PLUS SAMPLE		3. .1246	11.
4.	12.			4.	12.
5.	13.	FILTER OR CONTAINER TARE		5.	13.
6.	14.			6.	14.
7.	15.	SAMPLE	Ø	7.	15.
8.	16.			8.	16.

0.

DESICCATION OF SOLID SAMPLES TO CONSTANT WEIGHT

Completion Dates
1. _____ 2. _____
3. _____ 4. _____
Indicate by numbers in box under Sample column.

A-1

Requestor _____
JN _____
Assigned to _____
Date Assigned _____

ALL WEIGHTS IN GRAMS

TARE WEIGHT				TARE + SAMPLE WEIGHT	
1. .2064	9.	SAMPLE NUMBER	S-9	1. .2066	9.
2. .2064	10.		FILTER OR CONTAINER #	2. .2069	10.
3. .2064	11.	FILTER OR CONTAINER PLUS SAMPLE		3. .2067	11.
4.	12.			4.	12.
5.	13.	FILTER OR CONTAINER TARE		5.	13.
6.	14.			6.	14.
7.	15.	SAMPLE	.0003	7.	15.
8.	16.			8.	16.

13

1.	9.	SAMPLE NUMBER	FILTER OR CONTAINER #	1.	9.
2.	10.			2.	10.
3.	11.	FILTER OR CONTAINER PLUS SAMPLE		3.	11.
4.	12.			4.	12.
5.	13.	FILTER OR CONTAINER TARE		5.	13.
6.	14.			6.	14.
7.	15.	SAMPLE		7.	15.
8.	16.			8.	16.

1.	9.	SAMPLE NUMBER	FILTER OR CONTAINER #	1.	9.
2.	10.			2.	10.
3.	11.	FILTER OR CONTAINER PLUS SAMPLE		3.	11.
4.	12.			4.	12.
5.	13.	FILTER OR CONTAINER TARE		5.	13.
6.	14.			6.	14.
7.	15.	SAMPLE		7.	15.
8.	16.			8.	16.

1.	9.	SAMPLE NUMBER	FILTER OR CONTAINER #	1.	9.
2.	10.			2.	10.
3.	11.	FILTER OR CONTAINER PLUS SAMPLE		3.	11.
4.	12.			4.	12.
5.	13.	FILTER OR CONTAINER TARE		5.	13.
6.	14.			6.	14.
7.	15.	SAMPLE		7.	15.
8.	16.			8.	16.

DESICCATION OF SOLID SAMPLES TO CONSTANT WEIGHT

Completion Dates
1. _____ 2. _____
3. _____ 4. _____
Indicate by numbers in box under Sample column.

ABT PS
Cont #2
Fryer
A-2

Requestor _____
JN _____
Assigned to _____
Date Assigned _____

ALL WEIGHTS IN GRAMS

TARE WEIGHT				TARE + SAMPLE WEIGHT		
1. .1531	9.		S-1	1. .1431	9.	
2. .1531	10.	SAMPLE NUMBER	FILTER OR CONTAINER #	2. .1432	10.	
3. .1531	11.			3. .1422	11.	
4.	12.	FILTER OR CONTAINER PLUS SAMPLE		4.	12.	
5.	13.	FILTER OR CONTAINER TARE		5.	13.	
6.	14.			6.	14.	
7.	15.	SAMPLE	Ø	7.	15.	
8.	16.			8.	16.	0.0
1. .1389	9.		S-2	1. .1361	9.	
2. .1382	10.	SAMPLE NUMBER	FILTER OR CONTAINER #	2. .1360	10.	
3. .1383	11.			3. .1362	11.	
4.	12.	FILTER OR CONTAINER PLUS SAMPLE		4.	12.	
5.	13.	FILTER OR CONTAINER TARE		5.	13.	
6.	14.			6.	14.	
7.	15.	SAMPLE	Ø	7.	15.	
8.	16.			8.	16.	0.0
1. .1530	9.		S-3	1. .1513	9.	
2. .1527	10.	SAMPLE NUMBER	FILTER OR CONTAINER #	2. .1512	10.	
3. .1528	11.			3. .1507	11.	
4.	12.	FILTER OR CONTAINER PLUS SAMPLE	.1527	4.	12.	
5.	13.	FILTER OR CONTAINER TARE	.1513	5.	13.	
6.	14.			6.	14.	
7.	15.	SAMPLE	.0014	7.	15.	
8.	16.		1.4 mg	8.	16.	0.4
1. .1380	9.		S-4	1. .1358	9.	
2. .1381	10.	SAMPLE NUMBER	FILTER OR CONTAINER #	2. .1356	10.	
3. .1379	11.			3. .1348	11.	
4.	12.	FILTER OR CONTAINER PLUS SAMPLE		4.	12.	
5.	13.	FILTER OR CONTAINER TARE		5.	13.	
6.	14.			6.	14.	
7.	15.	SAMPLE	Ø	7.	15.	
8.	16.			8.	16.	0.0

DESICCATION OF SOLID SAMPLES TO CONSTANT WEIGHT

Completion Dates
1. _____ 2. _____
3. _____ 4. _____

Indicate by numbers in box under Sample column.

ABF
PS #2
Cont Fryer
A.2

ALL WEIGHTS IN GRAMS

Requestor _____
JN _____
Assigned to _____
Date Assigned _____

TARE WEIGHT				TARE + SAMPLE WEIGHT		
1. .1485	9.	SAMPLE NUMBER	S-5	1. .1483	9.	
2. .1485	10.		FILTER OR CONTAINER #	2. .1475	10.	
3. .1486	11.	FILTER OR CONTAINER PLUS SAMPLE		3. .1484	11.	
4.	12.			4.	12.	
5.	13.	FILTER OR CONTAINER TARE		5.	13.	
6.	14.			6.	14.	
7.	15.	SAMPLE	0	7.	15.	
8.	16.			8.	16.	0.0

1. .1354	9.	SAMPLE NUMBER	S-6	1. .1378	9.	
2. .1354	10.		FILTER OR CONTAINER #	2. .1375	10.	
3. .1353	11.	FILTER OR CONTAINER PLUS SAMPLE	.1375	3. .1372	11.	
4.	12.			4.	12.	
5.	13.	FILTER OR CONTAINER TARE	.1354	5.	13.	
6.	14.			6.	14.	
7.	15.	SAMPLE	.0021	7.	15.	
8.	16.		2.1	8.	16.	2.1

1. .1481	9.	SAMPLE NUMBER	S-7	1. .1500	9.	
2. .1481	10.		FILTER OR CONTAINER #	2. .1494	10.	
3. .1481	11.	FILTER OR CONTAINER PLUS SAMPLE	.1495	3. .1492	11.	
4.	12.			4.	12.	
5.	13.	FILTER OR CONTAINER TARE	.1481	5.	13.	
6.	14.			6.	14.	
7.	15.	SAMPLE	14	7.	15.	
8.	16.		1.4	8.	16.	1.4

1. .1358	9.	SAMPLE NUMBER	S-8	1. .1351	9.	
2. .1358	10.		FILTER OR CONTAINER #	2. .1343	10.	
3. .1357	11.	FILTER OR CONTAINER PLUS SAMPLE		3. .1334	11.	
4.	12.			4.	12.	
5.	13.	FILTER OR CONTAINER TARE		5.	13.	
6.	14.			6.	14.	
7.	15.	SAMPLE	0	7.	15.	
8.	16.			8.	16.	0.0

DESICCATION OF SOLID SAMPLES TO CONSTANT WEIGHT

Completion Dates
1. _____ 2. _____
3. _____ 4. _____
Indicate by numbers in box under Sample column.

DS 3
A3

Requestor _____
JN _____
Assigned to _____
Date Assigned _____

ALL WEIGHTS IN GRAMS

TARE WEIGHT				TARE + SAMPLE WEIGHT	
1. .1538	9.	SAMPLE NUMBER	S-5	1. .1561	9.
2. .1539	10.	FILTER OR CONTAINER #		2. .1562	10.
3. .1537	11.	FILTER OR CONTAINER PLUS SAMPLE	.1562	3. .1564	11.
4.	12.	FILTER OR CONTAINER TARE	.1538	4.	12.
5.	13.	SAMPLE	.0024	5.	13.
6.	14.		2.4	6.	14.
7.	15.			7.	15.
8.	16.			8.	16.

TARE WEIGHT				TARE + SAMPLE WEIGHT	
1. .1407	9.	SAMPLE NUMBER	S-6	1. .1432	9.
2. .1407	10.	FILTER OR CONTAINER #		2. .1433	10.
3. .1407	11.	FILTER OR CONTAINER PLUS SAMPLE	.1432	3. .1430	11.
4.	12.	FILTER OR CONTAINER TARE	.1407	4.	12.
5.	13.	SAMPLE	.0025	5.	13.
6.	14.		2.5	6.	14.
7.	15.			7.	15.
8.	16.			8.	16.

TARE WEIGHT				TARE + SAMPLE WEIGHT	
1. .1524	9.	SAMPLE NUMBER	S-7	1. .1542	9.
2. .1524	10.	FILTER OR CONTAINER #		2. .1538	10.
3. .1223	11.	FILTER OR CONTAINER PLUS SAMPLE	.1537	3. .1531	11.
4.	12.	FILTER OR CONTAINER TARE	.1524	4.	12.
5.	13.	SAMPLE	13	5.	13.
6.	14.		1.3	6.	14.
7.	15.			7.	15.
8.	16.			8.	16.

TARE WEIGHT				TARE + SAMPLE WEIGHT	
1. .1390	9.	SAMPLE NUMBER	S-8	1. .1354	9.
2. .1387	10.	FILTER OR CONTAINER #		2. .1348	10.
3. .1387	11.	FILTER OR CONTAINER PLUS SAMPLE	.1348	3. .1341	11.
4.	12.	FILTER OR CONTAINER TARE	.1390	4.	12.
5.	13.	SAMPLE	Ø	5.	13.
6.	14.			6.	14.
7.	15.			7.	15.
8.	16.			8.	16.

DESICCATION OF SOLID SAMPLES TO CONSTANT WEIGHT

Completion Dates
1. _____ 2. _____
3. _____ 4. _____
Indicate by numbers in box under Sample column.

A-3

Requestor _____
JN _____
Assigned to _____
Date Assigned _____

ALL WEIGHTS IN GRAMS

TARE WEIGHT				TARE + SAMPLE WEIGHT	
1. 1,2068	9.	SAMPLE NUMBER	S-9 FILTER OR CONTAINER #	1. 1,2061	9.
2. 1,2067	10.			2. 1,2057	10.
3. 1,2066	11.	FILTER OR CONTAINER PLUS SAMPLE		3. 1,2058	11.
4.	12.			4.	12.
5.	13.	FILTER OR CONTAINER TARE	1,2067	5.	13.
6.	14.			6.	14.
7.	15.	SAMPLE	0	7.	15.
8.	16.			8.	16.

1.	9.	SAMPLE NUMBER	FILTER OR CONTAINER #	1.	9.
2.	10.			2.	10.
3.	11.	FILTER OR CONTAINER PLUS SAMPLE		3.	11.
4.	12.			4.	12.
5.	13.	FILTER OR CONTAINER TARE		5.	13.
6.	14.			6.	14.
7.	15.	SAMPLE		7.	15.
8.	16.			8.	16.

1.	9.	SAMPLE NUMBER	FILTER OR CONTAINER #	1.	9.
2.	10.			2.	10.
3.	11.	FILTER OR CONTAINER PLUS SAMPLE		3.	11.
4.	12.			4.	12.
5.	13.	FILTER OR CONTAINER TARE		5.	13.
6.	14.			6.	14.
7.	15.	SAMPLE		7.	15.
8.	16.			8.	16.

1.	9.	SAMPLE NUMBER	FILTER OR CONTAINER #	1.	9.
2.	10.			2.	10.
3.	11.	FILTER OR CONTAINER PLUS SAMPLE		3.	11.
4.	12.			4.	12.
5.	13.	FILTER OR CONTAINER TARE		5.	13.
6.	14.			6.	14.
7.	15.	SAMPLE		7.	15.
8.	16.			8.	16.

DESICCATION OF SOLID SAMPLES TO CONSTANT WEIGHT

Completion Dates
1. _____ 2. _____
3. _____ 4. _____
Indicate by numbers in box under Sample column.

Tortilla Cove
#1
A-4 DS

Requestor _____
JN _____
Assigned to _____
Date Assigned _____

ALL WEIGHTS IN GRAMS

TARE WEIGHT				TARE + SAMPLE WEIGHT	
1. 1499	9.		S-1	1. 1482	9.
2. 1501	10.	SAMPLE NUMBER	FILTER OR CONTAINER #	2. 1473	10.
3. 1500	11.			3. 1462	11.
4.	12.	FILTER OR CONTAINER PLUS SAMPLE		4.	12.
5.	13.	FILTER OR CONTAINER TARE		5.	13.
6.	14.			6.	14.
7.	15.	SAMPLE	Ø	7.	15.
8.	16.			8.	16.

1. 1361	9.		S-2	1. 1315	9.
2. 1362	10.	SAMPLE NUMBER	FILTER OR CONTAINER #	2. 1315	10.
3. 1363	11.			3. 1313	11.
4.	12.	FILTER OR CONTAINER PLUS SAMPLE		4.	12.
5.	13.	FILTER OR CONTAINER TARE		5.	13.
6.	14.			6.	14.
7.	15.	SAMPLE	Ø	7.	15.
8.	16.			8.	16.

1. 1496	9.		S-3	1. 1478	9.
2. 1498	10.	SAMPLE NUMBER	FILTER OR CONTAINER #	2. 1475	10.
3. 1497	11.			3. 1479	11.
4.	12.	FILTER OR CONTAINER PLUS SAMPLE		4.	12.
5.	13.	FILTER OR CONTAINER TARE		5.	13.
6.	14.			6.	14.
7.	15.	SAMPLE	Ø	7.	15.
8.	16.			8.	16.

1. 1362	9.		S-4	1. 1323	9.
2. 1360	10.	SAMPLE NUMBER	FILTER OR CONTAINER #	2. 1329	10.
3. 1361	11.			3. 1326	11.
4.	12.	FILTER OR CONTAINER PLUS SAMPLE		4.	12.
5.	13.	FILTER OR CONTAINER TARE		5.	13.
6.	14.			6.	14.
7.	15.	SAMPLE	Ø	7.	15.
8.	16.			8.	16.

DESICCATION OF SOLID SAMPLES TO CONSTANT WEIGHT

Completion Dates
1. _____ 2. _____
3. _____ 4. _____

Indicate by numbers in box under Sample column.

Requestor _____
JN _____
Assigned to _____
Date Assigned _____

A-4

ALL WEIGHTS IN GRAMS

TARE WEIGHT				TARE + SAMPLE WEIGHT		
1. .1535	9.	SAMPLE NUMBER	S-5 FILTER OR CONTAINER #	1. .1485	9.	
2. .1535	10.			2. .1497	10.	
3. .1535	11.	FILTER OR CONTAINER PLUS SAMPLE		3. .1500	11.	
4.	12.			4.	12.	
5.	13.	FILTER OR CONTAINER TARE		5.	13.	
6.	14.			6.	14.	
7.	15.	SAMPLE	Ø	7.	15.	
8.	16.			8.	16.	0.0

TARE WEIGHT				TARE + SAMPLE WEIGHT		
1. .1394	9.	SAMPLE NUMBER	S-6 FILTER OR CONTAINER #	1. .1350	9.	
2. .1395	10.			2. .1356	10.	
3. .1394	11.	FILTER OR CONTAINER PLUS SAMPLE		3. .1348	11.	
4.	12.			4.	12.	
5.	13.	FILTER OR CONTAINER TARE		5.	13.	
6.	14.			6.	14.	
7.	15.	SAMPLE	Ø	7.	15.	
8.	16.			8.	16.	0.0

TARE WEIGHT				TARE + SAMPLE WEIGHT		
1. .1516	9.	SAMPLE NUMBER	S-7 FILTER OR CONTAINER #	1. .1458	9.	
2. .1518	10.			2. .1457	10.	
3. .1516	11.	FILTER OR CONTAINER PLUS SAMPLE		3. .1449	11.	
4.	12.			4.	12.	
5.	13.	FILTER OR CONTAINER TARE		5.	13.	
6.	14.			6.	14.	
7.	15.	SAMPLE	Ø	7.	15.	
8.	16.			8.	16.	0.0

TARE WEIGHT				TARE + SAMPLE WEIGHT		
1. .1377	9.	SAMPLE NUMBER	S-8 FILTER OR CONTAINER #	1. .1332	9.	
2. .1378	10.			2. .1331	10.	
3. .1377	11.	FILTER OR CONTAINER PLUS SAMPLE		3. .1336	11.	
4.	12.			4.	12.	
5.	13.	FILTER OR CONTAINER TARE		5.	13.	
6.	14.			6.	14.	
7.	15.	SAMPLE	Ø	7.	15.	
8.	16.			8.	16.	0.0

DESICCATION OF SOLID SAMPLES TO CONSTANT WEIGHT

Completion Dates
1. _____ 2. _____
3. _____ 4. _____
Indicate by numbers in box under Sample column.

A-4

Requestor _____
JN _____
Assigned to _____
Date Assigned _____

ALL WEIGHTS IN GRAMS

TARE WEIGHT				TARE + SAMPLE WEIGHT	
1. .2023	9.		S-9	1. .1932	9.
2. .2023	10.	SAMPLE NUMBER	FILTER OR CONTAINER #	2. .1931	10.
3. .2023	11.			3. .1924	11.
4.	12.	FILTER OR CONTAINER PLUS SAMPLE		4.	12.
5.	13.	FILTER OR CONTAINER TARE		5.	13.
6.	14.			6.	14.
7.	15.	SAMPLE	Ø	7.	15.
8.	16.			8.	16.

0.0

1.	9.			1.	9.
2.	10.	SAMPLE NUMBER	FILTER OR CONTAINER #	2.	10.
3.	11.			3.	11.
4.	12.	FILTER OR CONTAINER PLUS SAMPLE		4.	12.
5.	13.	FILTER OR CONTAINER TARE		5.	13.
6.	14.			6.	14.
7.	15.	SAMPLE		7.	15.
8.	16.			8.	16.

1.	9.			1.	9.
2.	10.	SAMPLE NUMBER	FILTER OR CONTAINER #	2.	10.
3.	11.			3.	11.
4.	12.	FILTER OR CONTAINER PLUS SAMPLE		4.	12.
5.	13.	FILTER OR CONTAINER TARE		5.	13.
6.	14.			6.	14.
7.	15.	SAMPLE		7.	15.
8.	16.			8.	16.

1.	9.			1.	9.
2.	10.	SAMPLE NUMBER	FILTER OR CONTAINER #	2.	10.
3.	11.			3.	11.
4.	12.	FILTER OR CONTAINER PLUS SAMPLE		4.	12.
5.	13.	FILTER OR CONTAINER TARE		5.	13.
6.	14.			6.	14.
7.	15.	SAMPLE		7.	15.
8.	16.			8.	16.

DESICCATION OF SOLID SAMPLES TO CONSTANT WEIGHT

Completion Dates
1. _____ 2. _____
3. _____ 4. _____
Indicate by numbers in box under Sample column.

Tortilla #2 A-5

Requestor _____
JN _____
Assigned to _____
Date Assigned _____

ALL WEIGHTS IN GRAMS

TARE WEIGHT				TARE + SAMPLE WEIGHT		
1. .1510	9.	SAMPLE NUMBER	S-1	1. .1513	9.	
2. .1510	10.	FILTER OR CONTAINER #		2. .1515	10.	
3. .1509	11.	FILTER OR CONTAINER PLUS SAMPLE	.1513	3. .1512	11.	
4.	12.	FILTER OR CONTAINER TARE	.1510	4.	12.	
5.	13.	SAMPLE	.0003	5.	13.	
6.	14.		.3	6.	14.	
7.	15.			7.	15.	
8.	16.			8.	16.	

.3

1. .1379	9.	SAMPLE NUMBER	S-2	1. .1384	9.	
2. .1379	10.	FILTER OR CONTAINER #		2. .1379	10.	
3. .1377	11.	FILTER OR CONTAINER PLUS SAMPLE	.1382	3. .1384	11.	
4.	12.	FILTER OR CONTAINER TARE	.1379	4.	12.	
5.	13.	SAMPLE	.0003	5.	13.	
6.	14.		.3	6.	14.	
7.	15.			7.	15.	
8.	16.			8.	16.	

.3

1. .1515	9.	SAMPLE NUMBER	S-3	1. .1525	9.	
2. .1513	10.	FILTER OR CONTAINER #		2. .1516	10.	
3. .1514	11.	FILTER OR CONTAINER PLUS SAMPLE	.1521	3. .1523	11.	
4.	12.	FILTER OR CONTAINER TARE	.1514	4.	12.	
5.	13.	SAMPLE	.0007	5.	13.	
6.	14.		.7	6.	14.	
7.	15.			7.	15.	
8.	16.			8.	16.	

.7

1. .1384	9.	SAMPLE NUMBER	S-4	1. .1395	9.	
2. .1384	10.	FILTER OR CONTAINER #		2. .1398	10.	
3. .1384	11.	FILTER OR CONTAINER PLUS SAMPLE	.1394	3. .1389	11.	
4.	12.	FILTER OR CONTAINER TARE	.1384	4.	12.	
5.	13.	SAMPLE	.0010	5.	13.	
6.	14.		1.0	6.	14.	
7.	15.			7.	15.	
8.	16.			8.	16.	

1.0

A00034

DESICCATION OF SOLID SAMPLES TO CONSTANT WEIGHT

Completion Dates
1. _____ 2. _____
3. _____ 4. _____
Indicate by numbers in box under Sample column.

Toitilla Lime
A-5

Requestor _____
JN _____
Assigned to _____
Date Assigned _____

ALL WEIGHTS IN GRAMS

TARE WEIGHT				TARE + SAMPLE WEIGHT		
1. .1515	9.		S-5	1. .1528	9.	
2. .1515	10.	SAMPLE NUMBER	FILTER OR CONTAINER #	2. .1521	10.	
3. .1515	11.			3. .1526	11.	
4.	12.	FILTER OR CONTAINER PLUS SAMPLE	.1525	4.	12.	
5.	13.	FILTER OR CONTAINER TARE	.1515	5.	13.	
6.	14.			6.	14.	
7.	15.	SAMPLE		7.	15.	
8.	16.		1.0	8.	16.	1.0

1. .1384	9.		S-6	1. .1402	9.	
2. .1384	10.	SAMPLE NUMBER	FILTER OR CONTAINER #	2. .1400	10.	
3. .1384	11.			3. .1407	11.	
4.	12.	FILTER OR CONTAINER PLUS SAMPLE	1403	4.	12.	
5.	13.	FILTER OR CONTAINER TARE	.1384	5.	13.	
6.	14.			6.	14.	
7.	15.	SAMPLE	.0019	7.	15.	
8.	16.		1.9	8.	16.	1.9

1. .1519	9.		S-7	1. .1536	9.	
2. .1520	10.	SAMPLE NUMBER	FILTER OR CONTAINER #	2. .1512	10.	
3. .1521	11.			3. .1531	11.	
4.	12.	FILTER OR CONTAINER PLUS SAMPLE	.1526	4.	12.	
5.	13.	FILTER OR CONTAINER TARE	.1520	5.	13.	
6.	14.			6.	14.	
7.	15.	SAMPLE	.0006	7.	15.	
8.	16.			8.	16.	.6

1. .1374	9.		S-8	1. .1384	9.	
2. .1375	10.	SAMPLE NUMBER	FILTER OR CONTAINER #	2. .1369	10.	
3. .1376	11.			3. .1365	11.	
4.	12.	FILTER OR CONTAINER PLUS SAMPLE		4. .1367	12.	
5.	13.	FILTER OR CONTAINER TARE	.1375	5.	13.	
6.	14.			6.	14.	
7.	15.	SAMPLE	0	7.	15.	
8.	16.			8.	16.	0

DESICCATION OF SOLID SAMPLES TO CONSTANT WEIGHT

Completion Dates

1. _____ 2. _____

3. _____ 4. _____

Indicate by numbers in box under Sample column.

Requestor _____

JN _____

Assigned to _____

Date Assigned _____

A-5

ALL WEIGHTS IN GRAMS

TARE WEIGHT				TARE + SAMPLE WEIGHT	
1. 2073	9.	SAMPLE NUMBER	S-9 FILTER OR CONTAINER #	1. 2082	9.
2. 2073	10.			2. 2081	10.
3. 2071	11.	FILTER OR CONTAINER PLUS SAMPLE		3. 2053	11.
4.	12.			4. 2045	12.
5.	13.	FILTER OR CONTAINER TARE	2072	5. 2054	13.
6.	14.			6.	14.
7.	15.	SAMPLE	Ø	7.	15.
8.	16.			8.	16.

1.	9.	SAMPLE NUMBER	FILTER OR CONTAINER #	1.	9.
2.	10.			2.	10.
3.	11.	FILTER OR CONTAINER PLUS SAMPLE		3.	11.
4.	12.			4.	12.
5.	13.	FILTER OR CONTAINER TARE		5.	13.
6.	14.			6.	14.
7.	15.	SAMPLE		7.	15.
8.	16.			8.	16.

1.	9.	SAMPLE NUMBER	FILTER OR CONTAINER #	1.	9.
2.	10.			2.	10.
3.	11.	FILTER OR CONTAINER PLUS SAMPLE		3.	11.
4.	12.			4.	12.
5.	13.	FILTER OR CONTAINER TARE		5.	13.
6.	14.			6.	14.
7.	15.	SAMPLE		7.	15.
8.	16.			8.	16.

1.	9.	SAMPLE NUMBER	FILTER OR CONTAINER #	1.	9.
2.	10.			2.	10.
3.	11.	FILTER OR CONTAINER PLUS SAMPLE		3.	11.
4.	12.			4.	12.
5.	13.	FILTER OR CONTAINER TARE		5.	13.
6.	14.			6.	14.
7.	15.	SAMPLE		7.	15.
8.	16.			8.	16.

DESICCATION OF SOLID SAMPLES TO CONSTANT WEIGHT

Tortilla Line
PS-3

A-6

Completion Dates
1. _____ 2. _____
3. _____ 4. _____
Indicate by numbers in box under Sample column.

Requestor _____
JN _____
Assigned to _____
Date Assigned _____

ALL WEIGHTS IN GRAMS

TARE WEIGHT				TARE + SAMPLE WEIGHT	
1. .1495	9.		S-1	1. .1499	9.
2. .1495	10.	SAMPLE NUMBER	FILTER OR CONTAINER #	2. .1498	10.
3. .1495	11.			3. .1490	11.
4.	12.	FILTER OR CONTAINER PLUS SAMPLE	.1490	4.	12.
5.	13.	FILTER OR CONTAINER TARE	.1495	5.	13.
6.	14.			6.	14.
7.	15.	SAMPLE	~~0~~	7.	15.
8.	16.			8.	16.

0.0

1. .1368	9.		S-2	1. .1368	9.
2. .1369	10.	SAMPLE NUMBER	FILTER OR CONTAINER #	2. .1367	10.
3. .1367	11.			3. .1364	11.
4.	12.	FILTER OR CONTAINER PLUS SAMPLE	.1368	4.	12.
5.	13.	FILTER OR CONTAINER TARE	.1368	5.	13.
6.	14.			6.	14.
7.	15.	SAMPLE	~~0~~	7.	15.
8.	16.			8.	16.

0.0

1. .1493	9.		S-3	1. .1495	9.
2. .1494	10.	SAMPLE NUMBER	FILTER OR CONTAINER #	2. .1496	10.
3. .1493	11.			3. .1499	11.
4.	12.	FILTER OR CONTAINER PLUS SAMPLE	.1499	4.	12.
5.	13.	FILTER OR CONTAINER TARE	.1494	5.	13.
6.	14.			6.	14.
7.	15.	SAMPLE	.0005	7.	15.
8.	16.		.5	8.	16.

.5

1. .1362	9.		S-4	1. .1360	9.
2. .1362	10.	SAMPLE NUMBER	FILTER OR CONTAINER #	2. .1357	10.
3. .1361	11.			3. .1357	11.
4.	12.	FILTER OR CONTAINER PLUS SAMPLE		4.	12.
5.	13.	FILTER OR CONTAINER TARE	.1362	5.	13.
6.	14.			6.	14.
7.	15.	SAMPLE	~~0~~	7.	15.
8.	16.			8.	16.

DESICCATION OF SOLID SAMPLES TO CONSTANT WEIGHT

Completion Dates
1. _____ 2. _____
3. _____ 4. _____

Indicate by numbers in box under Sample column.

Requestor _____
JN _____
Assigned to _____
Date Assigned _____

A-6

ALL WEIGHTS IN GRAMS

TARE WEIGHT				TARE + SAMPLE WEIGHT	
1. .1539	9.	SAMPLE NUMBER	S-5 FILTER OR CONTAINER #	1. .1543	9.
2. .1539	10.			2. .1540	10.
3. .1537	11.	FILTER OR CONTAINER PLUS SAMPLE	.1541	3. .1540	11.
4.	12.			4.	12.
5.	13.	FILTER OR CONTAINER TARE	.1538	5.	13.
6.	14.			6.	14.
7.	15.	SAMPLE	.0003	7.	15.
8.	16.		.3	8.	16.

0.3

TARE WEIGHT				TARE + SAMPLE WEIGHT	
1. .1402	9.	SAMPLE NUMBER	S-6 FILTER OR CONTAINER #	1. .1401	9.
2. .1400	10.			2. .1402	10.
3. .1401	11.	FILTER OR CONTAINER PLUS SAMPLE	.1402	3. .1403	11.
4.	12.			4.	12.
5.	13.	FILTER OR CONTAINER TARE	.1401	5.	13.
6.	14.			6.	14.
7.	15.	SAMPLE	.0001	7.	15.
8.	16.		.1	8.	16.

0.1

TARE WEIGHT				TARE + SAMPLE WEIGHT	
1. .1517	9.	SAMPLE NUMBER	S-7 FILTER OR CONTAINER #	1. .1512	9.
2. .1517	10.			2. .1516	10.
3. .1516	11.	FILTER OR CONTAINER PLUS SAMPLE	.1514	3. .1513	11.
4.	12.			4.	12.
5.	13.	FILTER OR CONTAINER TARE	.1517	5.	13.
6.	14.			6.	14.
7.	15.	SAMPLE	Ø	7.	15.
8.	16.			8.	16.

TARE WEIGHT				TARE + SAMPLE WEIGHT	
1. .1385	9.	SAMPLE NUMBER	S-8 FILTER OR CONTAINER #	1. .1364	9.
2. .1385	10.			2. .1366	10.
3. .1385	11.	FILTER OR CONTAINER PLUS SAMPLE		3. .1357	11.
4.	12.			4.	12.
5.	13.	FILTER OR CONTAINER TARE		5.	13.
6.	14.			6.	14.
7.	15.	SAMPLE	Ø	7.	15.
8.	16.			8.	16.

DESICCATION OF SOLID SAMPLES TO CONSTANT WEIGHT

Completion Dates
1. _____ 2. _____
3. _____ 4. _____
Indicate by numbers in box under Sample column.

A-6

Requestor _____
JN _____
Assigned to _____
Date Assigned _____

ALL WEIGHTS IN GRAMS

TARE WEIGHT				TARE + SAMPLE WEIGHT	
1. .2030	9.	SAMPLE NUMBER	S-9 FILTER OR CONTAINER #	1. .2008	9.
2. .2030	10.			2. .2005	10.
3. .2030	11.	FILTER OR CONTAINER PLUS SAMPLE	.2008	3. .2006	11.
4.	12.			4.	12.
5.	13.	FILTER OR CONTAINER TARE	.2030	5.	13.
6.	14.			6.	14.
7.	15.	SAMPLE	Ø	7.	15.
8.	16.			8.	16.

1.	9.	SAMPLE NUMBER	FILTER OR CONTAINER #	1.	9.
2.	10.			2.	10.
3.	11.	FILTER OR CONTAINER PLUS SAMPLE		3.	11.
4.	12.			4.	12.
5.	13.	FILTER OR CONTAINER TARE		5.	13.
6.	14.			6.	14.
7.	15.	SAMPLE		7.	15.
8.	16.			8.	16.

1.	9.	SAMPLE NUMBER	FILTER OR CONTAINER #	1.	9.
2.	10.			2.	10.
3.	11.	FILTER OR CONTAINER PLUS SAMPLE		3.	11.
4.	12.			4.	12.
5.	13.	FILTER OR CONTAINER TARE		5.	13.
6.	14.			6.	14.
7.	15.	SAMPLE		7.	15.
8.	16.			8.	16.

1.	9.	SAMPLE NUMBER	FILTER OR CONTAINER #	1.	9.
2.	10.			2.	10.
3.	11.	FILTER OR CONTAINER PLUS SAMPLE		3.	11.
4.	12.			4.	12.
5.	13.	FILTER OR CONTAINER TARE		5.	13.
6.	14.			6.	14.
7.	15.	SAMPLE		7.	15.
8.	16.			8.	16.

Test# CONT FRYER

	#1	#2	#3	CUTOFF
S-1	0.0	0.0	0.0	18
S-2	0.0	0.0	0.0	12.0
S-3	0.0	1.4 21.5	0.3 3.23	8.0
S-4	0.0	0.0	2.8 30.31	5.5
S-5	0.0	0.0	2.4 28.8	3.5
S-6	0.9	2.1 32.3	2.5	1.8
S-7	0.0	1.4 21.5	1.3	1.1
S-8	0.0	0.0	0	.71
S-9	0.3	1.6 24.6	0	Find
Total kg	1.2	6.5	9.3	
condensable	18.37	35.2	40.2	
	19.57	41.7	49.5	
- total	43.7	84.4	81.7	86.4
DMSTD	10.119	9.500	9.845	
~~T~~ Flow	.33	.317	.328	
Ts	235	235	235	
Tm	67	79	81	

GRS/SDCF

.0298	.0677	.0776	.0584
.0464	.0339	.0456	.0420

A00010

EAGLE SNACKS - CONT. FRYER
10/10/90 - TEST #1

GAS METER READING	VELOCITY HEAD	SQUARE ROOT		ORIFICE PRESSURE DELTA H		STACK TEMPERATURE	DRY GAS METER TEMPERATURE	
---	---	---		---		---	---	---
400.946	0.2	0.447213			0.73	255	65	65
428.097	0.2	0.447213			0.76	232	67	66
---	0.22	0.469041			0.7	234	70	67
27.151	0.22	0.469041			0.65	239	74	67
=========	0.21	0.458257			0.64	234	79	68
(DIFFERENCE)	0.23	0.479583			0.6	240	88	70
	0.19	0.435889			0.65	238	91	71
	0.17	0.412310			0.66	238	96	74
	0.16	0.4			0.68	235	100	78
	0.15	0.387298			0.68	232	102	80
	0.14	0.374165			0.65	232	104	82
	0.11	0.331662			0.64	226	104	84
	0.22	0.469041			0.9	245	106	87
	0.21	0.458257			0.67	223	106	90
	0.21	0.458257			0.65	235	107	92
	0.2	0.447213			0.65	236	106	94
	0.2	0.447213			0.63	237	105	95
	0.22	0.469041			0.62	237	106	96
	0.2	0.447213			0.67	235	105	98
	0.17	0.412310			0.66	236	105	98
	0.17	0.412310			0.64	236	105	98
	0.16	0.4			0.62	234	104	100
	0.16	0.4			0.63	230	104	100
	0.14	0.374165			0.65	225	104	100
		---	AVERAGE SQUARED					
	AVERAGE	0.429446	0.184	AVERAGE	0.67	AVERAGE 235.1666	AVERAGE	90.06
		=========	=========		==========	=========		=========

A00015

EAGLE SNACKS - CONT. FRYER
10/10/90 - TEST #2

GAS METER READING	VELOCITY HEAD	SQUARE ROOT		ORIFICE PRESSURE DELTA H	STACK TEMPERATURE	DRY GAS METER TEMPERATURE	
428.708	0.11	0.331662		0.25	232	94	94
451.485	0.14	0.374165		0.32	231	90	94
---	0.16	0.4		0.36	239	90	94
22.777	0.19	0.435889		0.43	238	90	92
=========	0.19	0.435889		0.43	238	92	92
(DIFFERENCE)	0.19	0.435889		0.43	238	93	92
	0.23	0.479583		0.52	237	97	92
	0.23	0.479583		0.52	238	97	93
	0.18	0.424264		0.41	237	102	92
	0.22	0.469041		0.5	238	102	92
	0.23	0.479583		0.53	239	106	96
	0.23	0.479583		0.54	229	108	98
	0.26	0.509901		0.61	232	110	100
	0.26	0.509901		0.61	234	110	100
	0.32	0.565685		0.75	234	112	100
	0.33	0.574456		0.77	235	112	102
	0.28	0.529150		0.65	237	114	102
	0.2	0.447213		0.47	237	116	103
	0.19	0.435889		0.45	235	114	104
	0.18	0.424264		0.42	236	114	104
	0.17	0.412310		0.4	233	114	104
	0.17	0.412310		0.4	231	115	104
	0.24	0.489897		0.56	233	115	104
	0.32	0.565685		0.7	227	115	104
		---	AVERAGE SQUARED				
	AVERAGE	0.462575	0.214	AVERAGE 0.50	AVERAGE 234.9166	AVERAGE	101.54
		=========	=========	==========	=========		=========

A00046

EAGLE SNACKS - CONT. FRYER
10/10/90 - TEST #3

GAS METER READING	VELOCITY HEAD	SQUARE ROOT		ORIFICE PRESSURE DELTA H		STACK TEMPERATURE	DRY GAS METER TEMPERATURE	
---	---	---		---		---	---	---
451.751	0.21	0.458257		0.48		230	94	94
472.681	0.19	0.435889		0.43		234	94	94
---	0.19	0.435889		0.43		238	94	94
20.930	0.19	0.435889		0.43		235	94	94
=========	0.19	0.435889		0.43		236	94	94
(DIFFERENCE)	0.2	0.447213		0.46		238	98	92
	0.22	0.469041		0.5		240	103	93
	0.17	0.412310		0.4		240	104	94
	0.17	0.412310		0.39		238	110	96
	0.15	0.387298		0.35		239	112	98
	0.12	0.346410		0.28		236	112	98
	0.11	0.331662		0.26		227	103	98
	0.19	0.435889		0.44		238	103	98
	0.17	0.412310		0.39		237	104	98
	0.19	0.435889		0.44		235	106	98
	0.19	0.435889		0.44		237	106	98
	0.2	0.447213		0.46		237	106	98
	0.21	0.458257		0.49		237	107	99
	0.19	0.435889		0.44		236	108	100
	0.18	0.424264		0.42		233	108	100
	0.17	0.412310		0.4		231	108	100
	0.15	0.387298		0.35		230	108	100
	0.13	0.360555		0.31		227	108	100
	0.11	0.331662		0.26		226	108	100
		---	AVERAGE SQUARED					
	AVERAGE	0.416062	0.173	AVERAGE 0.40	AVERAGE	234.7916	AVERAGE	100.42
		=========	=========	==========		=========		=========

EAGLE SNACKS - TORTILLA LINE
10/10/90 - TEST #4

GAS METER READING	VELOCITY HEAD	SQUARE ROOT		ORIFICE PRESSURE DELTA H		STACK TEMPERATURE	DRY GAS METER TEMPERATURE	
---	---	---		---		---	---	---
477.535	0.12	0.346410		0.94		177	60	60
582.634	0.12	0.346410		0.96		174	70	65
---	0.13	0.360555		1.04		179	78	66
105.099	0.14	0.374165		1.18		152	84	70
=========	0.16	0.4		1.36		178	90	76
(DIFFERENCE)	0.14	0.374165		1.16		180	98	80
	0.13	0.360555		1.08		181	100	84
	0.13	0.360555		1.08		182	102	88
	0.12	0.346410		1		181	104	90
	0.12	0.346410		1		180	106	84
	0.13	0.360555		1.1		176	106	96
	0.13	0.360555		1.1		182	107	97
	0.14	0.374165		1.18		182	108	98
	0.14	0.374165		1.18		180	105	98
	0.16	0.4		1.35		182	106	98
	0.15	0.387298		1.27		182	110	100
	0.14	0.374165		1.19		183	112	102
	0.11	0.331662		0.94		182	111	103
	0.11	0.331662		0.94		181	112	104
	0.1	0.316227		0.85		180	112	104
		---	AVERAGE SQUARED					
	AVERAGE	0.361304	0.131	AVERAGE 1.10	AVERAGE	178.7	AVERAGE	93.60
		=========	=========	==========		=========		=========

A00048

EAGLE SNACKS - TORTILLA LINE
10/11/90 - TEST #5

GAS METER READING	VELOCITY HEAD	SQUARE ROOT		ORIFICE PRESSURE DELTA H		STACK TEMPERATURE	DRY GAS METER TEMPERATURE	
---	---	---		---		---	---	---
585.454	0.13	0.360555		1.1		178	104	102
699.230	0.13	0.360555		1.1		183	104	105
---	0.13	0.360555		1.11		184	113	107
113.776	0.13	0.360555		1.22		127	116	108
=========	0.15	0.387298		1.41		129	120	110
(DIFFERENCE)	0.13	0.360555		1.23		130	124	112
	0.13	0.360555		1.22		132	122	114
	0.12	0.346410		1.13		133	122	114
	0.13	0.360555		1.22		131	123	114
	0.13	0.360555		1.23		129	120	114
	0.15	0.387298		1.42		127	120	114
	0.14	0.374165		1.33		126	124	114
	0.14	0.374165		1.32		133	125	115
	0.14	0.374165		1.33		130	125	116
	0.16	0.4		1.51		133	124	116
	0.14	0.374165		1.33		128	124	116
	0.13	0.360555		1.25		123	125	116
	0.12	0.346410		1.15		124	127	119
	0.12	0.346410		1.15		128	126	120
	0.1	0.316227		0.97		120	126	120
		---	AVERAGE SQUARED					
	AVERAGE	0.363585	0.132	AVERAGE 1.24	AVERAGE	136.4	AVERAGE	117.00
		=========	=========	==========		=========		=========

EAGLE SNACKS - TORTILLA LINE
10/12/90 - TEST #6

GAS METER READING	VELOCITY HEAD	SQUARE ROOT		ORIFICE PRESSURE DELTA H		STACK TEMPERATURE	DRY GAS METER TEMPERATURE	
708.417	0.13	0.360555		1.04		170	62	60
811.858	0.12	0.346410		0.95		175	66	60
---	0.13	0.360555		1.04		175	76	64
103.441	0.14	0.374165		1.14		175	84	68
=========	0.15	0.387298		1.23		174	84	72
(DIFFERENCE)	0.12	0.346410		0.99		173	88	74
	0.12	0.346410		0.99		173	90	78
	0.12	0.346410		1		173	92	80
	0.11	0.331662		0.92		172	96	84
	0.1	0.316227		0.84		172	97	87
	0.13	0.360555		1.1		171	98	88
	0.14	0.374165		1.18		173	98	90
	0.14	0.374165		1.18		173	102	90
	0.15	0.387298		1.27		174	100	92
	0.17	0.412310		1.44		173	101	93
	0.15	0.387298		1.27		174	102	94
	0.14	0.374165		1.19		173	104	96
	0.12	0.346410		1.02		173	104	96
	0.11	0.331662		0.94		172	105	97
	0.11	0.331662		0.94		173	105	99
		---	AVERAGE SQUARED					
	AVERAGE	0.359789	0.129	AVERAGE 1.08	AVERAGE	173.05	AVERAGE	87.90
		=========	=========	==========		=========		=========

EAGLE SNACKS - PARTICULATE SIZING
10/10/90 - TEST #1

GAS METER READING	VELOCITY HEAD	SQUARE ROOT	ORIFICE PRESSURE DELTA H	STACK TEMPERATURE	DRY GAS METER TEMPERATURE	
435.500			1.15		63	70
445.619			0.57			
10.119						
(DIFFERENCE)						
		AVERAGE SQUARED				
	AVERAGE	ERR	ERR AVERAGE 0.86	AVERAGE ERR	AVERAGE	66.50

EAGLE SNACKS - PARTICULATE SIZING
10/10/90 - TEST #2

GAS METER READING	VELOCITY HEAD	SQUARE ROOT	ORIFICE PRESSURE DELTA H	STACK TEMPERATURE	DRY GAS METER TEMPERATURE	
446.044			0.5		72	84
455.544					76	84
9.500						
(DIFFERENCE)						
		AVERAGE SQUARED				
	AVERAGE	ERR	ERR AVERAGE ERR	AVERAGE ERR	AVERAGE	79.00

EAGLE SNACKS - PARTICULATE SIZING
10/10/90 - TEST #3

GAS METER READING	VELOCITY HEAD	SQUARE ROOT	ORIFICE PRESSURE DELTA H	STACK TEMPERATURE	DRY GAS METER TEMPERATURE	
456.300			0.5		76	86
466.145						
9.845						
(DIFFERENCE)						
		AVERAGE SQUARED				
	AVERAGE	ERR	ERR AVERAGE ERR	AVERAGE ERR	AVERAGE	81.00

EAGLE SNACKS - PARTICULATE SIZING
10/10/90 - TEST #4

GAS METER READING	VELOCITY HEAD	SQUARE ROOT	ORIFICE PRESSURE DELTA H	STACK TEMPERATURE	DRY GAS METER TEMPERATURE	
468.947			0.4		72	80
499.242			0.4		74	76
			0.4		74	76
30.295			0.42		74	76
			0.38		76	81
(DIFFERENCE)			0.36		80	86

AVERAGE SQUARED

AVERAGE ERR ERR AVERAGE 0.39 AVERAGE ERR AVERAGE 77.08

EAGLE SNACKS - PARTICULATE SIZING
10/11/90 - TEST #5

GAS METER READING	VELOCITY HEAD	SQUARE ROOT	ORIFICE PRESSURE DELTA H	STACK TEMPERATURE	DRY GAS METER TEMPERATURE	
499.454			0.4		86	98
529.384			0.4		88	104
			0.37		88	102
29.930			0.42		88	98
(DIFFERENCE)			0.42		88	97

AVERAGE SQUARED

AVERAGE ERR ERR AVERAGE 0.40 AVERAGE ERR AVERAGE 93.70

EAGLE SNACKS - PARTICULATE SIZING
10/12/90 - TEST #6

GAS METER READING	VELOCITY HEAD	SQUARE ROOT	ORIFICE PRESSURE DELTA H		STACK TEMPERATURE	DRY GAS METER TEMPERATURE	
529.577			0.4	0.5		66	70
561.874			0.4	0.3		66	72
			0.4	0.45		66	74
32.297			0.4	0.51		73	80
(DIFFERENCE)			0.4	0.5		74	84
			0.4	0.5		74	84

AVERAGE SQUARED

AVERAGE ERR ERR AVERAGE 0.46 AVERAGE ERR AVERAGE 73.58

WESTERN ENVIRONMENTAL SERVICES

APPENDIX B

WESTERN ENVIRONMENTAL SERVICES

PITOT TUBE CALIBRATION

Date: January 19, 1990
Calibrated by: Ty Hastriter
Number: 23
Source: Magnehlic 0-2"

Delta P std	Delta P leg 1	Delta P leg 2	Cp leg 1	Cp leg 2
1.04	1.65	1.50	0.79	0.83
0.69	1.05	1.10	0.81	0.79
0.36	0.60	0.62	0.77	0.76
		Averages	0.79	0.80
		Average	0.79	

WESTERN ENVIRONMENTAL SERVICES

APPENDIX C

WESTERN ENVIRONMENTAL SERVICES

NOMENCLATURE

%CO	Percent CO by volume, dry
$\%CO_2$	Percent CO_2 by volume, dry
%EA	Percent excess air in stack gas
%I	Percent Isokinetic
%M	Percent Moisture in Stack Gas, by Volume
$\%N_2$	Percent N_2 by volume, dry
$\%O_2$	Percent O_2 by volume, dry
A_s	Stack Area, ft^2
C_p	Pitot Tube Coefficient
C_{sf}	Particulate concentrations at standard conditions (1), dry, based on probe, cyclone and filter catch, GRS/SDCF
C_{st}	Particulate concentration at standard conditions (1), dry, based on total catch, GRS/SDCF
D_n	Sampling nozzle diameter, in.
E_f	Particulate emission rate, based on probe, cyclone and filter catch, lbs/hr
E_t	Particulate emission rates based on total particulate catch, lbs/hr
I_c	Percent of particulate caught in impingers
M_d	Mole Fraction Dry Stack Gas
M_f	Particulate collected in probe, cyclone and filter, mg.
M_t	Total particulate collected mg.
MW	Molecular Weight of Wet Stack Gas, gm/gm-mole
MW_c	Molecular Weight of Chemical
MW_d	Molecular Weight of Dry Stack Gas, gm/gm-mole
P	Velocity head, in. H_2O
P_b	Barometric Pressure, in. Hg.
PE_f	Particulate emission rate on a process basis, probe, cyclone and filter catch
PE_t	Particulate emission rate on a process basis, Total catch
P_m	Average Orifice Pressure Drop, in. Hg.

WESTERN ENVIRONMENTAL SERVICES

NOMENCLATURE
(CONT)

PPM	Parts per million
P_s	Stack Gas Pressure, in. Hg., absolute
P_u	Unit process rate
Q_a	Stack Gas Flow Rate at Stack Conditions, ft^3/min
Q_s	Stack Gas Flow Rate at Standard Conditions (1), dry ft^3/min
T_m	Average Dry Gas Meter Temperature, ^0F.
T_s	Stack Gas Temperature, ^0F
T_s	Average Stack Gas Temperature, ^0F
T_{std}	Standard Temperature, ^0F
T_t	Net time of test min.
V_m	Volume of Dry Gas Sampled at Meter Conditions, ft^3
$V_{m_{std}}$	Volume of Dry Gas Sampled at Standard Conditions (1), ft^3
V_s	Average Stack Gas Velocity, Stack Conditions, ft/sec
V_w	Total H_2O Collected in Impingers and Silica Gel, ml
$V_{w_{std}}$	Volume of Water Vapor Collected at Standard Conditions (1), ft

WESTERN ENVIRONMENTAL SERVICES

CALCULATIONS

1. Volume of water vapor at standard conditions [1]

$$V_{w_{std}} = .00267 * \frac{460 + T_{std}}{29.92} * Vlc$$

2. Volume of dry gas sampled at standard conditions [1]

$$V_{m_{std}} = 17.64 * \frac{V_m (P_b + P_m)}{(T_m + 460)}$$

3. Percent moisture in stack gas by volume.

$$\%M = \frac{100 * V_{w_{std}}}{V_{w_{std}} + V_{m_{std}}}$$

4. Mole fraction dry stack gas.

$$M_s = \frac{100 - \%M}{100}$$

5. Molecular weight of dry stack gas (gm/gm - Mole)

$$MW_d = [(\% CO_2 * .44) + (\% O_2 * .32) + (\% N_2 * .28) + (\% CO * .28) + (\% \text{ Additional Gas} * \text{MW of Additional Gas})]$$

6. Molecular weight of wet stack gas (gm/gm - Mole)

$$MW + (18 * Bwo) + [(1-Bwo) * MW_d]$$

7. Stack gas velocity at stack conditions [2], (ft/sec)

$$V_s = 85.49 * CP * \sqrt{\Delta P} * \sqrt{\frac{(T_s + 460)}{Ms * P_s}}$$

8. Stack gas volumetric flow rate at stack conditions.

$$Q_a = V_s * A_s * 60$$

CALCULATIONS

9. Stack gas volumetric folw rate at standard conditions [1]

$$Q_s = Q_a * \frac{528}{460 + T_s} * \frac{P_s}{29.92} * (1.00 - Bwo)$$

10. Percent isokinetic

$$\%I = \left[\frac{(T_s + 460) * V_{m\,std}}{P_s * V_s * AN * T_t} * (1 - Bwo) \right] * .0945$$

11. Particulate Concentrations at standard conditions [1], dry, based on probe, cyclone and filter catch.

$$C_{sf} = \frac{M_f * 15.43}{V_{m\,std} * 1000}$$

12. Particulate concentration at standard conditions [1], dry, based on total catch.

$$C_{st} = \frac{M_t * 15.43}{V_{m\,std} * 1000}$$

13. Particulate emission rate, based on probe, cyclone, and filter catch.

$$E_f = \frac{M_f * 60 * Q_s}{454{,}000 * V_{m\,std}}$$

14. Particulate emission rate, based on total catch.

$$E_t = \frac{M_t * 60 * Q_s}{454{,}000 * V_{m\,std}}$$

CALCULATIONS

15. Particulate emission rate on a process basis, probe, cyclone, and filter catch.

$$PE_f = \frac{E_f}{P_u}$$

16. Particulate emission rate on a process basis, total catch.

$$PE_t = \frac{E_f}{P_u}$$

17. Particulate emission rate, part per million.

$$ppm = \frac{M_t}{V_{m_{std}}} * \frac{863.3}{MW_c}$$

(1) Standard conditions: 68^0, 29.92 "Hg

(2) $\sqrt{\Delta P_s * (T_s + 460)}$ is determined by averaging the square root of the product of the velocity head (ΔP_s) and the absolute stack temperature (T_s + 460) for each indibidual point

WESTERN ENVIRONMENTAL SERVICES

APPENDIX D

ANHEUSER-BUSCH COMPANIES

October 24, 1990

Mr. Thomas L. Rooney
Western Environmental Services
1010 So. Pacific Coast Highway
Redondo Beach, CA 90277

RE: Visalia Eagle Snacks, Inc.
October Fryer Testing

Dear Tom:

Attached is a copy of my field notes from October 10, 11, 12, 1990 for inclusion in the pending report covering testing on those dates. These field notes include my best estimates of the process rates during each of your test runs.

For each fryer, there was a circumstance that limited production. In the Fall, the potato chip Fryer operates at a lower frying temperature (about 10°F) to reduce the product chip coloration from the higher raw potato sugar content of newly harvested potatoes. This lower frying temperature also reduces the maximum possible fryer thruput.

Two different tortilla products were processed during your tests. The thinner "premium" chip is triangular. The tortilla chip processing line can produce up to about 1500 lb/hr of finished, unseasoned, "premium" chips. A thicker "restaurant" chip is shaped like a quarter circle. The chip processing line can produce up to about 1150 lb/hr of the finished, unseasoned, "restaurant" chips. The maximum outputs for both the potato chip and tortilla fryers are theoretical ones based on many assumptions which are only approximated on a day to day basis.

In your process description of your test report, please include a short narrative of the potato sugar variance and the tortilla chip products. In the summary table where you list the tortilla process rate, please include a column showing the chip type being processed as noted in my field notes (i.e. "premium" or "restaurant"). Please call if you have any questions.

Yours truly,

ANHEUSER-BUSCH COMPANIES, INC.

Donald M. DeHart

Donald M. DeHart
Sr. Env. Eng.

Tel: (314) 577-4158
Fax: (314) 577-1032

DMD/tms
Attachment

Anheuser-Busch Companies, Inc.
Executive Offices
One Busch Place
St. Louis, MO U.S.A. 63118-1852
Telex 447 117 ANBUSCH STL

D00001

Visalia Continuous Potato Chip Fryer, Size Distribution

~~Nov~~ Oct 10, 1990

DATE	TIME	INPUT, Raw Potatoes Totalizer lb	rate lb/hr	Testing Start/Stop Time	RUN	Frying Oil Makeup lb	Frying Oil Circulate Used Oil gpm	Oil Temp of @Fryer disc	Oil Temp of @HT Exch	Exhaust Damper %	Input Stop RPM	Comments
10th	0845	166080	10700			1304	(Kettle)	305	354	55	838	Operator [illegible]
	0900:00	168700	10500			1517		303	352	55	842	Potato Hopper Auger Speed (% Input discontinued)
	0915:00	171360	11100			1853	332	304	354	55	841	
	0925:00	173150	10300	0920	1	2068	373	305	352	55	848	S.G. - 1.102 Atlantic (Variety) [illegible]
	0940:00	175760	10820			2345	429	308	354	55	849	
	0955:00	178360	10400			2608	476	306	351	55	857	305 - 310°F Outlet Temp - Criteria
	1010:00	181020	11080			2887	524	305	352	55	860	if too low decrease Auger Speed
	1025:00	182820	10450	1022	1	307[illegible]	564	305	352	55	860	IN fall, potatoes have higher moisture & sugar
		11460 lb in 70 min or		9823 lb/hr		use 9820 lb/hr						Thus must operate at lower frying temp
	1028:00	195110	10500			4346	795	305	350	55	864	and lower throughput to minimize chip
	1200:00	200950				4966	918	303	352	55	864	coloration.
	1215:30	203760				5166	949	302	351	55	861	
	1225:00	205500	11000	1220	2	5386	991	304	352	55	865	
	1240:00	208250	12100			5714	1054	304	353	55	866	
	1255:30	211080	11300			5986	1100	304	353	55	863	
	1315:00	214660	10400			6300	1168	305	352	55	865	
	1325:00	216510	10700	1322	2	6506	1205	304	350	55	865	
		12760 lb in 70 min		~10,929 lb/hr		use 10,930 lb/hr						
	1505:00	235470	12000	1506	3	8426	1576	303	351	57	860	
	1520:00	238370	11300			8704	1625	300	351	57	859	
	1537:00	241690	10600			235	47	304	354	57	835	
	1554:00	244840	10200			574	113	306	352	57	824	
	1610:00	247640	10980	1608	3	871	171	305	353	57	824	
		12170 lb in 65 min or		11234 lb/hr		use 11,230 lb/hr						

Input Avg = 10,662 lb/hr

2134 - 2666 lb/hr

DOC002

Visalia Eagle Snacks Tortilla Fryer #1 Oct 11, 1990

DATE Run #	Testing Start/Stop Time	TIME	SHEETER/CUTTER RPM wet (1/2)	SHEETER/CUTTER RPM Ind (1/2)	IN grams/10pc (1/2)	OUTPUT RATE lb/hr	Oil Temp, °F Fryer disch (grams)	Oil Temp, °F @HT Each Digit	Finished chips grams/10pc
10/11		0810	32.3/32.4	115/116	21.5/20.2		340	359	16.5
1	Start 0841	850	32.1/32.5	115/115	21.4/20.4		340	358	16.2
		9:30	32.4/32.4	115/115	22.3/21.6		342	358	16.6
	Run 1	10:05	32.2/32.5	115/116	21.8/19.8		342	361	16.4
		10:35	32.4/32.4	115/115	21.6/20.7		344	360	16.5
		11:00	32.1/32.4	114/116	21.6/21.1		344	359	16.9
1	End 11:42	11:35	32.2/32.5	114/116	21.4/20.4		34[illegible]	360	16.6
	Ave. For	run (mead)	32.34		21.175	1525 lb/hr*			16.53
2	Start 1231	12:35	32.4/32.5	114/116	22.3/20.7		344	361	16.5
(10/11)		13:10	32.4/32.5	114/115	22.3/21.5		342	361	16.8
		13:40	32.0/32.5	114/116	21.5/20.5		344	360	16.8
	Run 2	14:05	32.2/32.4	115/116	19.8/20.3		342	359	16.5
		14:35	2.2/2.8	115/116	21.6/21.1		342	359	16.2
		15:00	2.4/2.9	115/116	21.5/21.1		34[illegible]	360	16.9
2		1525	2.2/2.6	114/115	21.0/21.5		342	361	16.4
Oct 11	End 1532	Tread							
	Ave For Run		32.43		21.19	1535 lb/hr			16.59
Oct 12	Start 0800	0755	35.5/35.4	126/126	31.5/31.4		344	361	25.5
		0830	35.4/35.6	126/126	31.2/32.5		342	360	24.7
3	Run 3	0900	35.4/35.3	126/126	31.5/32.4		344	360	24.7
		0930	35.3/35.5	126/126	31.1/31.9		346	360	24.8
		1005	35.2/35.3	126/126	32.1/31.8		346	361	24.2
		1030	35.3/35.4	126/126	30.8/31.3		346	360	24.6
		1100	35.2/35.4	126/126	31.2/31.3		348	360	24.6
	1102 End	Treadings			31.57				
	Ave For Run		35.37			1176 lb/hr			24.66 gm

Comments

Product - "Premium"

Target is 16.50g/10 Finished chips

Operator sets weight of chips after toaster oven (and spray) to obtain finished chips at Target weight.

Down 5 min @ 900h to repair cutter wire o.a.

*based on ave. RPM of cutter, finished chip weight and sheeter data correlation for each Product. Finished chips are without seasoning.

Product - Restaurant

Target is 24.0 gm.

Note: RPM measured by digital meter for 15 sec. Meter measures RPM every second and then gives Average over time read.

Finished unseasoned chips weighed on balance to nearest 0.1 gram for 10 or 20 chips.

D00003

Oct 11, 1990
Tortilla Fryer

Test 1

41.1 mg PM × 0.015432 gr/mg = 0.6343 gr

0.6343 gr PM / 98.861 = 0.0061 gr/dscf

0.0061 gr/dscf × 1 #/7000 × 1602 dscf/min × 60 min/hr = 0.0222 #PM/hr

0.0222 #PM/hr × 1 hr/1525 # product × 2000 #/ton = 0.116 #PM/ton product

Test 2

0.0[illegible] × 1/7000 × [illegible] × 60 = 0.1317

0.1317 × [illegible]/1535 × 2000 = 0.172 #PM/ton potato product

Test 3

0.0205 × 1/7000 × 1630 × 60 = 0.2892

0.2892 × 1 hr/1176 × 2000 = 0.492 #PM/ton potato product

0.26

Avg Emission factor = 0.3 #PM/ton [illegible]

Oct. 10, 1990
Continuous Fryer

Test 1

0.0982 gr/dscf × 1#/7000 gr × 2692 dscf/min × 60 min/hr = 1.1260 #PM/hr

1.1260 #PM/hr × 1 hr/ # potato product × 2000 #/ton = #PM/ton potato product

Test 2

0.0368 gr/dscf × 1#/7000 gr × 2662 × 60 = 0.8412

0.8412 / 1 hr/ × 2000 = #PM/ton potato product

Test 3

0.045 × 1/7000 × [illegible] × 60 = 1.0331

1.0331 / hr × 2000 = #PM/ton potato product

Date Oct 11, 1990 Tortilla Line No. 1

Test Average Values

- Front Half (Filterable)

54.63 mg PM × 0.015432 gr/mg = 0.8431 gr

0.8431 gr / 100.005 dscf sampled = 0.0084 gr/dscf

0.0084 gr/dscf × 1#/7000 gr × 1630 dscf/min × 60 min/hr = 0.1178 #PM/hr

0.1178 #PM/hr × 1 hr / 1412 # potato product × 2000#/ton = 0.1668 #PM/ton potato product

- Back Half (Condensible)

23.83 mg PM × 0.015432 gr/mg = 0.3677 gr

0.3677 gr / 100.005 dscf sampled = 0.0037 gr/dscf

0.0037 gr/dscf × 1#/7000 gr × 1630 dscf/min × 60 min/hr = 0.0514 #PM/hr

0.0514 #PM/hr × 1 hr / 1412 # potato product × 2000#/ton = 0.0728 #PM/ton potato product

Date Oct 10, 1990 Continuous Fryer

(Note: this line has no number designation in the report)

Test Average Values

- Front Half (Filterable)

32.87 mg PM x 0.015432 gr/mg = 0.5072 gr

0.5072 gr / 22.105 dscf sampled = 0.0229 gr/dscf

0.0229 gr/dscf x 1#/7000 gr x 2611 dscf/min x 60 min/hr = 0.5136 # PM/hr

0.5136 # PM/hr x 1 hr / 2666 # potato product x 2000 #/ton = 0.3853 # PM/ton potato product

- Back Half (Condensible)

31.57 mg PM x 0.015432 gr/mg = 0.4872 gr

0.4872 gr / 22.105 dscf sampled = 0.0220 gr/dscf

0.0220 gr/dscf x 1#/7000 gr x 2611 dscf/min x 60 min/hr = 0.4932 # PM/hr

0.4932 ~~0.0~~ # PM/hr x 1 hr / 2666 # potato product x 2000 #/ton = 0.3700 ~~0.30~~ # PM/ton potato product

25% of input RATE
As per A. DeHart letter 11/8/93