Note: This is a reference cited in *AP 42, Compilation of Air Pollutant Emission Factors, Volume I Stationary Point and Area Sources.* AP42 is located on the EPA web site at www.epa.gov/ttn/chief/ap42/

The file name refers to the reference number, the AP42 chapter and section. The file name "ref02_c01s02.pdf" would mean the reference is from AP42 chapter 1 section 2. The reference may be from a previous version of the section and no longer cited. The primary source should always be checked.

| | |
|---|---|
| AP42 Section: | 9.10.1.2 |
| Background Chapter | 4 |
| Reference: | 20 |
| Title: | Results of the November 9-11, 1993, Air Emission Testing of Process Sources at the American Crystal Sugar East Grand Forks Plant, Interpoll Laboratories, Inc., Circle Pines, MN,<br><br>December 3, 1993. |

# APPENDIX S

## REPORT EXCERPTS FROM REFERENCE 20

(American Crystal Sugar Company, December 3, 1993)

Interpoll Laboratories, Inc.
4500 Ball Road N.E.
Circle Pines, Minnesota 55014-1819

TEL: (612) 786-6020
FAX: (612) 786-7854

# RESULTS OF THE NOVEMBER 9 - 11, 1993 AIR EMISSION TESTING OF PROCESS SOURCES AT THE AMERICAN CRYSTAL SUGAR EAST GRAND FORKS PLANT

Submitted to:

AMERICAN CRYSTAL SUGAR COMPANY
Business Highway 220
P.O. Box 357
East Grand Forks, Minnesota 56721

Attention:

Bruce Keifenheim

Approved by:

Daniel Despen
Manager
Stationary Source Testing Department

Report Number 3-1636
December 3, 1993
SP/slp

# 1 INTRODUCTION

During November 9 - 11, 1993 Interpoll Laboratories Personnel conducted State Air Emission Compliance Tests on the following sources at the American Crystal Sugar (ACS) Plant in East Grand Forks, Minnesota:

| SOURCE | POLLUTANT | EMISSION POINT NO. |
|---|---|---|
| "A" Pulp Dryer Stack | PM,SO2,NOx,CO,THC's | 3 |
| "B" Pulp Dryer Stack | PM,SO2,NOx,CO,THC's | 4 |
| "C" Pulp Dryer Stack | PM,SO2,NOx,CO,THC's | 5 |
| No. 1 Boiler Stack | PM,NOx,CO | 1 |
| No. 2 Boiler Stack | PM,NOx,CO | 2 |
| "E" Pellet Cooler Stack | PM | 6 |
| "W" Pellet Cooler Stack | PM | 7 |
| Pellet Loadout Stack | PM | 8 |

Scott Bainville, Jeff Bergstrom, Mark Kaehler, Eugene Brennan, Dan Despen, and Ken Nuessmeier performed the on-site portion of the test. Coordination between testing activities and plant operation was provided by Bruce Keifenheim of ACS. A member of the Minnesota Pollution Control Agency did not witness the test.

Particulate evaluations were performed in accordance with EPA Methods 1 - 5, CFR Title 40, Part 60, Appendix A (revised July 1, 1992). Preliminary determinations of the gas linear velocity profile was made before the first particulate determination at each site to allow selection of the appropriate nozzle diameter required for isokinetic sample withdrawal. An Interpoll Labs sampling train which meets or exceeds specifications in the above-cited reference was used to extract particulate samples by means of a glass-lined probe. Wet catch samples were collected in the back half of the Method 5 sampling train and analyzed as per Minnesota Rules, Part 7005.0500. In the case of the Pulp Dryer Stacks, sulfur dioxide samples were collected in the back half of the Method 5 Sampling Train in accordance with the large impinger version of EPA Method 6.

Table 1a. Summary of the Results of the November 11, 1993 Particulate Emission Test on the A - Pulp Dryer Stack at the American Crystal Sugar Plant Located in East Grand Forks, Minnesota.

| ITEM | Run 1 | Run 2 | Run 3 |
|---|---|---|---|
| Date of test | 11-11-93 | 11-11-93 | 11-11-93 |
| Time runs were done (HRS) | 930/1037 | 1100/1208 | 1230/1334 |
| * Process rate | | | |
| Volumetric flow | | | |
| actual (ACFM) | 50585 | 51776 | 51507 |
| standard (DSCFM) | 22618 | 24090 | 24043 |
| Gas temperature (DEG-F) | 214 | 214 | 215 |
| Moisture content (%V/V) | 41.60 | 39.20 | 38.96 |
| Gas composition (%V/V,dry) | | | |
| carbon dioxide | 6.60 | 3.30 | 6.30 |
| oxygen | 13.60 | 13.80 | 13.90 13.77 |
| nitrogen | 79.80 | 82.90 | 79.80 |
| Isokinetic variation (%) | 105.1 | 101.1 | 102.0 |
| Particulate concentration | | | |
| actual (GR/ACF) | .0425 | .0328 | .0347 |
| standard (GR/DSCF) | .0950 | .0706 | .0745 |
| Part. emission rate (LB/HR) | 18.43 | 14.58 | 15.35 |

Note: Dry + Organic Wet Catch

* For Process Rate Information - See Appendix E.

## OXIDES OF NITROGEN COMPLIANCE STATUS

| EMISSION POINT Number | SOURCE NAME | $NO_x$ *Emission Limit* (LB/HR) | $NO_x$ Emission Rate (LB/HR) |
|---|---|---|---|
| 3 | "A" Pulp Dryer | 13.04 | 16.6 |
| 4 | "B" Pulp Dryer | 14.79 | 21.2 |
| 5 | "C" Pulp Dryer | 13.04 | 16.7 |
| 1 | No. 1 Boiler | 233.6 | 181 |
| 2 | No. 2 Boiler | 233.6 | 193 |

No difficulties were encountered in the field or in the laboratory evaluation of the samples. On the basis of these facts and a complete review of the data and results, it is our opinion that the results reported herein are accurate and closely reflect the actual values which existed at the time the test was performed.

Table 1b. Summary of the Results of the November 11, 1993 Particulate Emission Test on the A - Pulp Dryer Stack at the American Crystal Sugar Plant Located in East Grand Forks, Minnesota.

| ITEM | Run 1 | Run 2 | Run 3 |
|---|---|---|---|
| Date of test | 11-11-93 | 11-11-93 | 11-11-93 |
| Time runs were done (HRS) | 930/1037 | 1100/1208 | 1230/1334 |
| * Process rate | | | |
| Volumetric flow | | | |
| actual (ACFM) | 50585 | 51776 | 51507 |
| standard (DSCFM) | 22618 | 24090 | 24043 |
| Gas temperature (DEG-F) | 214 | 214 | 215 |
| Moisture content (%V/V) | 41.60 | 39.20 | 38.96 |
| Gas composition (%V/V,dry) | | | |
| carbon dioxide | 6.60 | 3.30 | 6.30 |
| oxygen | 13.60 | 13.80 | 13.90 |
| nitrogen | 79.80 | 82.90 | 79.80 |
| Isokinetic variation (%) | 105.1 | 101.1 | 102.0 |
| Particulate concentration | | | |
| actual (GR/ACF) | .0370 | .0295 | .0320 |
| standard (GR/DSCF) | .0827 | .0634 | .0685 |
| Part. emission rate (LB/HR) | 16.03 | 13.09 | 14.12 |

* For Process Rate Information, See Appendix E

Note: Dry Catch Only

Table 2a. Summary of the Results of the November 10, 1993 Particulate Emission Test on the B - Pulp Dryer Stack at the American Crystal Sugar Plant Located in East Grand Forks, Minnesota.

| ITEM | Run 1 | Run 2 | Run 3 |
|---|---|---|---|
| Date of test | 11-10-93 | 11-10-93 | 11-10-93 |
| Time runs were done (HRS) | 905/1106 | 1130/1332 | 1350/1551 |
| * Process rate | | | |
| Volumetric flow | | | |
| actual (ACFM) | 76428 | 76312 | 74513 |
| standard (DSCFM) | 43382 | 44674 | 43695 |
| Gas temperature (DEG-F) | 243 | 234 | 232 |
| Moisture content (%V/V) | 23.30 | 21.92 | 21.97 |
| Gas composition (%V/V,dry) | | | |
| carbon dioxide | 3.40 | 3.00 | 3.30 |
| oxygen | 17.10 | 17.50 | 17.20 |
| nitrogen | 79.50 | 79.50 | 79.50 |
| Isokinetic variation (%) | 103.9 | 96.0 | 99.6 |
| Particulate concentration | | | |
| actual (GR/ACF) | .0283 | .0365 | .0323 |
| standard (GR/DSCF) | .0498 | .0624 | .0551 |
| Part. emission rate (LB/HR) | 18.53 | 23.89 | 20.63 |

Note: Dry + Organic Wet Catch

* For Process Rate Information - See Appendix E.

Table 9. Summary of the Results of the November 9 - 11, 1993 **Sulfur Dioxide** Emission Compliance Tests at the American Crystal Sugar Plant in East Grand Forks, Minnesota.

| Date | Time | Concentration (ppm,d) | Emission Rate (LB/HR) |
|---|---|---|---|
| **(A - Pulp Dryer Stack)** | | | |
| 11-11-93 | 0930-1037 | 21 | 4.73 |
| 11-11-93 | 1100-1208 | 16 | 3.92 |
| 11-11-93 | 1230-1334 | 16 | 3.91 |
| Average | | 18 | 4.19 |
| **(B - Pulp Dryer Stack)** | | | |
| 11-10-93 | 0905-1106 | 18 | 7.76 |
| 11-10-93 | 1130-1332 | 16 | 7.32 |
| 11-10-93 | 1350-1551 | 14 | 5.99 |
| Average | | 16 | 7.02 |
| **(C - Pulp Dryer Stack)** | | | |
| 11-09-93 | 1030-1235 | 19 | 4.80 |
| 11-09-93 | 1315-1517 | 12 | 3.08 |
| 11-09-93 | 1535-1738 | 25 | 5.87 |
| Average | | 19 | 4.58 |

Table 8b. Summary of the Results of the November 11, 1993 Particulate Emission Test on the Pellet Loadout Stack at the American Crystal Sugar Plant Located in East Grand Forks, Minnesota.

| ITEM | | Run 1 | Run 2 | Run 3 |
|---|---|---|---|---|
| Date of test | | 11-11-93 | 11-11-93 | 11-11-93 |
| Time runs were done | (HRS) | 1445/1549 | 1620/1721 | 1755/1856 |
| * Process rate | | | | |
| Volumetric flow | | | | |
| actual | (ACFM) | 4204 | 4211 | 4240 |
| standard | (DSCFM) | 4344 | 4364 | 4436 |
| Gas temperature | (DEG-F) | 37 | 35 | 31 |
| Moisture content | (%V/V) | 0.74 | 0.70 | 0.60 |
| Gas composition | (%V/V,dry) | | | |
| carbon dioxide | | 0.03 | 0.03 | 0.03 |
| oxygen | | 20.90 | 20.90 | 20.90 |
| nitrogen | | 79.07 | 79.07 | 79.07 |
| Isokinetic variation | (%) | 99.5 | 100.0 | 100.0 |
| Particulate concentration | | | | |
| actual | (GR/ACF) | .00195 | .00103 | .00071 |
| standard | (GR/DSCF) | .00189 | .00099 | .00068 |
| Part. emission rate | (LB/HR) | 0.070 | 0.037 | 0.026 |

* For Process Rate Information, See Appendix E
Note: Dry Catch Only

Table 10. Summary of the Results of the November 9 - 11, 1993 Oxides of Nitrogen Emission Compliance Tests at the American Crystal Sugar Plant in East Grand Forks, Minnesota.

| Date | Time | Concentration (ppm,d) | Emission Rate (LB/HR) |
|---|---|---|---|
| (A - Pulp Dryer Stack) | | | |
| 11-11-93 | 0930-1037 | 95 | 15.3 |
| 11-11-93 | 1100-1208 | 99 | 17.2 |
| 11-11-93 | 1230-1334 | 100 | 17.2 |
| Average | | 98 | 16.6 |
| (B - Pulp Dryer Stack) | | | |
| 11-10-93 | 0905-1106 | 69 | 21.3 |
| 11-10-93 | 1130-1332 | 67 | 21.5 |
| 11-10-93 | 1350-1551 | 66 | 20.8 |
| Average | | 67 | 21.2 |
| (C - Pulp Dryer Stack) | | | |
| 11-09-93 | 1030-1235 | 97 | 17.2 |
| 11-09-93 | 1315-1517 | 98 | 17.8 |
| 11-09-93 | 1535-1738 | 90 | 15.1 |
| Average | | 95 | 16.7 |
| (No. 1 Boiler Stack) | | | |
| 11-10-93 | 0810-0917 | 284 | 186 |
| 11-10-93 | 0948-1053 | 273 | 179 |
| 11-10-93 | 1115-1220 | 278 | 179 |
| Average | | 278 | 181 |
| (No. 2 Boiler Stack) | | | |
| 11-11-93 | 0830-0947 | 319 | 186 |
| 11-11-93 | 1011-1124 | 335 | 200 |
| 11-11-93 | 1146-1257 | 329 | 192 |
| Average | | 328 | 193 |

Table 11. Summary of the Results of the November 9 - 11, 1993 Total Hydrocarbon Emission Compliance Tests at the American Crystal Sugar Plant in East Grand Forks, Minnesota.

| Date | Time | Concentration (ppmC,w) | Emission Rate (LB/HR) |
|---|---|---|---|
| (A - Pulp Dryer Stack) | | | |
| 11-11-93 | 0930-1037 | 310 | 22.4 |
| 11-11-93 | 1100-1208 | 264 | 19.6 |
| 11-11-93 | 1230-1334 | 246 | 18.1 |
| Average | | 273 | 20.0 |
| (B - Pulp Dryer Stack) | | | |
| 11-10-93 | 0905-1106 | 106 | 11.2 |
| 11-10-93 | 1130-1332 | 72 | 7.70 |
| 11-10-93 | 1350-1551 | 65 | 6.80 |
| Average | | 81 | 8.57 |
| (C - Pulp Dryer Stack) | | | |
| 11-09-93 | 1030-1235 | 123 | 8.61 |
| 11-09-93 | 1315-1517 | 177 | 12.2 |
| 11-09-93 | 1535-1738 | 172 | 12.0 |
| Average | | 157 | 10.9 |

Table 12. Summary of the Results of the November 9 - 11, 1993 **Carbon Monoxide** Emission Compliance Tests at the American Crystal Sugar Plant in East Grand Forks, Minnesota.

| Date | Time | Concentration (ppm,d) | Emission Rate (LB/HR) |
|---|---|---|---|
| **(A - Pulp Dryer Stack)** | | | |
| 11-11-93 | 0930-1037 | 540 | 53.3 |
| 11-11-93 | 1100-1208 | 500 | 52.5 |
| 11-11-93 | 1230-1334 | 450 | 47.2 |
| Average | | 497 | 51.0 |
| **(B - Pulp Dryer Stack)** | | | |
| 11-10-93 | 0905-1106 | 750 | 142 |
| 11-10-93 | 1130-1332 | 830 | 162 |
| 11-10-93 | 1350-1551 | 590 | 112 |
| Average | | 723 | 139 |
| **(C - Pulp Dryer Stack)** | | | |
| 11-09-93 | 1030-1235 | 240 | 26.0 |
| 11-09-93 | 1315-1517 | 260 | 28.8 |
| 11-09-93 | 1535-1738 | 290 | 29.7 |
| Average | | 263 | 28.2 |
| **(No. 1 Boiler Stack)** | | | |
| 11-10-93 | 0810-0917 | 319 | 128 |
| 11-10-93 | 0948-1053 | 336 | 134 |
| 11-10-93 | 1115-1220 | 330 | 130 |
| Average | | 328 | 131 |
| **(No. 2 Boiler Stack)** | | | |
| 11-11-93 | 0830-0947 | 580 | 206 |
| 11-11-93 | 1011-1124 | 535 | 194 |
| 11-11-93 | 1146-1257 | 375 | 134 |
| Average | | 497 | 178 |

Table 13. Summary of the **Flow Rate Determinations** performed in Association with the November 9 - 11, 1993 Tests at the American Crystal Sugar East Grand Forks Plant.

| DATE | Time (HRS) | Volumetric Flow Rate (ACFM) | (DSCFM) |
|---|---|---|---|
| **(Test 1 - C Recycle Duct)** | | | |
| 11-09-93 | 0918 | 4537 | 2550 |
| **(Test 1 - C Pulp Dryer Stack)** | | | |
| 11-09-93 | 0927 | 47667 | 24354 |
| **(Test 1 - C Hopper Filter Inlet)** | | | |
| 11-10-93 | 0900 | 7024 | 3942 |
| **(Test 5 - B Recycle Duct)** | | | |
| 11-10-93 | 0828 | 6709 | 3981 |
| **(Test 5 - B Pulp Dryer Stack)** | | | |
| 11-10-93 | 0807 | 72162 | 41655 |
| **(Test 5 - B Hopper Filter Inlet)** | | | |
| 11-10-93 | 0840 | 9120 | 5375 |
| **(Test 9 - A Recycle Duct)** | | | |
| 11-11-93 | 0835 | 5173 | 2607 |
| **(Test 9 - A Hopper Filter Inlet)** | | | |
| 11-11-93 | 0830 | 10635 | 5342 |
| **(Test 10 - East Pellet Cooler Stack)** | | | |
| 11-11-93 | 1400 | 14197 | 11987 |
| **(Test 12 - Pellet Loadout Stack)** | | | |
| 11-11-93 | 1430 | 4099 | 4573 |
| **(Test 13 - West Pellet Cooler Stack)** | | | |
| 11-11-93 | 0905 | 15169 | 12800 |

Test No. 9
A - Pulp Dryer Stack

**Results of Particulate Loading Determinations-------Method 5**

| | Run 1 | Run 2 | Run 3 |
|---|---|---|---|
| Date of run | 11-11-93 | 11-11-93 | 11-11-93 |
| Time run start/end.....(HRS) | 930/1037 | 1100/1208 | 1230/1334 |
| Static pressure.....(IN.WC) | -0.70 | -0.70 | -0.70 |
| Cross sectional area (SQ.FT) | 12.05 | 12.05 | 12.05 |
| Pitot tube coefficient..... | .840 | .840 | .840 |
| Water in sample gas | | | |
| condenser.....(ML) | 0.0 | 0.0 | 0.0 |
| impingers.....(GRAMS) | 617.0 | 575.0 | 574.0 |
| desiccant.....(GRAMS) | 17.0 | 13.0 | 12.0 |
| total.....(GRAMS) | 634.0 | 588.0 | 586.0 |
| Total particulate material.. | | | |
| .....collected(grams) | 0.2585 | 0.1968 | 0.2089 |
| Gas meter coefficient..... | 0.9985 | 0.9975 | 0.9975 |
| Barometric pressure..(IN.HG) | 29.30 | 29.30 | 29.30 |
| Avg. orif.pres.drop..(IN.WC) | 1.78 | 1.74 | 1.72 |
| Avg. gas meter temp..(DEF-F) | 77.2 | 78.8 | 78.2 |
| Volume through gas meter.... | | | |
| at meter conditions...(CF) | 43.49 | 44.74 | 44.99 |
| standard conditions.(DSCF) | 41.97 | 43.00 | 43.28 |
| Total sampling time....(MIN) | 60.00 | 60.00 | 60.00 |
| Nozzle diameter.....(IN) | .255 | .255 | .255 |
| Avg.stack gas temp ..(DEG-F) | 214 | 214 | 215 |
| Volumetric flow rate..... | | | |
| actual.....(ACFM) | 50585 | 51776 | 51507 |
| dry standard.....(DSCFM) | 22618 | 24090 | 24043 |
| Isokinetic variation.....(%) | 105.1 | 101.1 | 102.0 |
| Particulate concentration... | | | |
| actual.....(GR/ACF) | 0.04248 | 0.03285 | 0.03475 |
| dry standard.....(GR/DSCF) | 0.09504 | 0.07062 | 0.07447 |
| Particle mass rate...(LB/HR) | 18.426 | 14.583 | 15.347 |

Test No. 5
B - Pulp Dryer Stack

**Results of Particulate Loading Determinations------Method 5**

| | Run 1 | Run 2 | Run 3 |
|---|---|---|---|
| Date of run | 11-10-93 | 11-10-93 | 11-10-93 |
| Time run start/end.....(HRS) | 905/1106 | 1130/1332 | 1350/1551 |
| Static pressure.....(IN.WC) | -0.98 | -0.98 | -0.98 |
| Cross sectional area (SQ.FT) | 18.99 | 18.99 | 18.99 |
| Pitot tube coefficient..... | .840 | .840 | .840 |
| Water in sample gas | | | |
| condenser.....(ML) | 0.0 | 0.0 | 0.0 |
| impingers.....(GRAMS) | 379.0 | 334.0 | 336.0 |
| desiccant.....(GRAMS) | 13.0 | 11.0 | 15.0 |
| total.....(GRAMS) | 392.0 | 345.0 | 351.0 |
| Total particulate material.. | | | |
| .....collected(grams) | 0.1965 | 0.2343 | 0.2098 |
| Gas meter coefficient..... | 0.9975 | 0.9975 | 0.9975 |
| Barometric pressure..(IN.HG) | 29.55 | 29.55 | 29.55 |
| Avg. orif.pres.drop..(IN.WC) | 0.84 | 0.79 | 0.80 |
| Avg. gas meter temp..(DEF-F) | 72.7 | 85.0 | 80.0 |
| Volume through gas meter.... | | | |
| at meter conditions...(CF) | 62.22 | 60.62 | 60.91 |
| standard conditions.(DSCF) | 60.86 | 57.95 | 58.77 |
| Total sampling time....(MIN) | 120.00 | 120.00 | 120.00 |
| Nozzle diameter.....(IN) | .198 | .198 | .198 |
| Avg.stack gas temp ..(DEG-F) | 243 | 234 | 232 |
| Volumetric flow rate..... | | | |
| actual.....(ACFM) | 76428 | 76312 | 74513 |
| dry standard.....(DSCFM) | 43382 | 44674 | 43695 |
| Isokinetic variation.....(%) | 103.9 | 96.0 | 99.6 |
| Particulate concentration... | | | |
| actual.....(GR/ACF) | 0.02827 | 0.03651 | 0.03229 |
| dry standard.....(GR/DSCF) | 0.04982 | 0.06239 | 0.05509 |
| Particle mass rate...(LB/HR) | 18.526 | 23.889 | 20.631 |

Test No. 9
A - Pulp Dryer Stack

**Results of Sulfur Dioxide Determinations----------Method 6**

| | Run 1 | Run 2 | Run 3 |
|---|---|---|---|
| Date of run | 11-11-93 | 11-11-93 | 11-11-93 |
| Time run start/end.....(HRS) | 0930-1037 | 1100-1208 | 1230-1334 |
| Barometric pressure..(IN.HG) | 29.30 | 29.30 | 29.30 |
| Meter temperature....(DEG-F) | 77.20 | 78.80 | 78.20 |
| Meter correction coefficient | 0.9985 | 0.9975 | 0.9975 |
| Volume through gas meter.... | | | |
| at meter conditions...(CF) | 43.490 | 44.740 | 44.990 |
| standard conditions..(SCF) | 41.967 | 42.997 | 43.283 |
| Total sampling time....(MIN) | 60.0 | 60.0 | 60.0 |
| Moisture content.....(%V/V) | 41.60 | 39.20 | 38.96 |
| Oxygen content....(%V/V DRY) | 13.60 | 13.80 | 13.90 |
| Milliequivalents of SO4 in.. | | | |
| gas sample..... | 2.0700 | 1.6500 | 1.6600 |
| <u>Sulfur dioxide concentration</u> | | | |
| (GR/DSCF)..... | 0.0244 | 0.0190 | 0.0190 |
| (MG/DSCM)..... | 56 | 43 | 43 |
| (PPM-DRY)..... | 21 | 16 | 16 |
| (PPM-WET)..... | 12 | 10 | 10 |
| SO2 Emission rate....(LB/HR) | 4.73 | 3.92 | 3.91 |

Test No. 5
B - Pulp Dryer Stack

**Results of Sulfur Dioxide Determinations----------Method 6**

| | Run 1 | Run 2 | Run 3 |
|---|---|---|---|
| Date of run | 11-10-93 | 11-10-93 | 11-10-93 |
| Time run start/end.....(HRS) | 0905-1106 | 1130-1332 | 1350-1551 |
| Barometric pressure..(IN.HG) | 29.55 | 29.55 | 29.55 |
| Meter temperature....(DEG-F) | 72.70 | 85.00 | 80.00 |
| Meter correction coefficient | 0.9975 | 0.9975 | 0.9975 |
| Volume through gas meter.... | | | |
| at meter conditions...(CF) | 62.220 | 60.620 | 60.910 |
| standard conditions..(SCF) | 60.859 | 57.948 | 58.766 |
| Total sampling time....(MIN) | 120.0 | 120.0 | 120.0 |
| Moisture content.....(%V/V) | 23.30 | 21.92 | 21.97 |
| Oxygen content....(%V/V DRY) | 17.10 | 17.50 | 17.20 |
| Milliequivalents of SO4 in.. | | | |
| gas sample..... | 2.5700 | 2.2400 | 1.9000 |
| <u>Sulfur dioxide concentration</u> | | | |
| (GR/DSCF)..... | 0.0209 | 0.0191 | 0.0160 |
| (MG/DSCM)..... | 48 | 44 | 37 |
| (PPM-DRY)..... | 18 | 16 | 14 |
| (PPM-WET)..... | 14 | 13 | 11 |
| SO2 Emission rate....(LB/HR) | 7.76 | 7.32 | 5.99 |

Test No. 9
A - Pulp Dryer Stack

**Results of Oxides of Nitrogen (NOx) Determinations---------Method 7**

| | Run 1A | Run 1B | Run 1C | Run 1D |
|---|---|---|---|---|
| Date of run..... | 11-11-93 | 11-11-93 | 11-11-93 | 11-11-93 |
| Time of run.....(HRS) | 930 | 945 | 1000 | 1015 |
| Flask number..... | 13 | 14 | 15 | 16 |
| Volume of flask.....(ML) | 2060 | 2048 | 2045 | 2067 |
| **Data: time of sampling** | | | | |
| flask temperature..(DEG-F) | 40.00 | 40.00 | 38.00 | 37.00 |
| bar. press.....(IN.HG) | 29.30 | 29.30 | 29.30 | 29.30 |
| flask vacuum.....(IN.HG) | 27.65 | 27.60 | 27.65 | 27.60 |
| flask abs. press...(IN.HG) | 1.65 | 1.70 | 1.65 | 1.70 |
| **Data: Time of Flask Opening** | | | | |
| flask temperature..(DEG-F) | 72.00 | 72.00 | 72.00 | 72.00 |
| lab. bar. press....(IN.HG) | 29.16 | 29.16 | 29.16 | 29.16 |
| flask static press.(IN.HG) | -0.40 | 0.20 | -0.20 | -0.10 |
| flask abs. press...(IN.HG) | 28.76 | 29.36 | 28.96 | 29.06 |
| Volume gas sampled....(DSML) | 1822 | 1848 | 1822 | 1844 |
| Moisture content.....(%V/V) | 41.59 | 41.59 | 41.59 | 41.59 |
| Oxygen content....(%V/V,DRY) | 13.60 | 13.60 | 13.60 | 13.60 |
| Nitrate in gas sample...(JG) | 443.0 | 460.0 | 441.0 | 445.0 |
| NO2 in gas sample.....(JG) | 328.7 | 341.3 | 327.2 | 330.2 |
| <u>NOx Concentration</u> | | | | |
| (GR/DSCF)..... | 0.0788 | 0.0807 | 0.0785 | 0.0782 |
| (MG/DSCM)..... | 180 | 185 | 180 | 179 |
| (PPM-DRY)..... | 94 | 97 | 94 | 94 |
| (PPM-WET)..... | 55 | 56 | 55 | 55 |
| NOX Emission rate....(LB/HR) | 15.28 | 15.65 | 15.22 | 15.17 |
| NOx emission factor..... .....(LB/MMBTU)* | 0.315 | 0.323 | 0.314 | 0.313 |

* F = 9780 DSCF/MMBTU

Test No. 9
A - Pulp Dryer Stack

**Results of Oxides of Nitrogen (NOx) Determinations---------Method 7**

| | Run 2A | Run 2B | Run 2C | Run 2D |
|---|---|---|---|---|
| Date of run..... | 11-11-93 | 11-11-93 | 11-11-93 | 11-11-93 |
| Time of run.....(HRS) | 1105 | 1130 | 1145 | 1155 |
| Flask number..... | 17 | 18 | 73 | 74 |
| Volume of flask.....(ML) | 2054 | 2045 | 2065 | 2071 |
| **Data: time of sampling** | | | | |
| flask temperature..(DEG-F) | 37.00 | 38.00 | 40.00 | 39.00 |
| bar. press.....(IN.HG) | 29.30 | 29.30 | 29.30 | 29.30 |
| flask vacuum.....(IN.HG) | 27.65 | 27.65 | 27.60 | 27.60 |
| flask abs. press...(IN.HG) | 1.65 | 1.65 | 1.70 | 1.70 |
| **Data: Time of Flask Opening** | | | | |
| flask temperature..(DEG-F) | 72.00 | 72.00 | 72.00 | 72.00 |
| lab. bar. press....(IN.HG) | 29.16 | 29.16 | 29.16 | 29.16 |
| flask static press.(IN.HG) | 0.30 | 0.10 | 0.10 | -0.60 |
| flask abs. press...(IN.HG) | 29.46 | 29.26 | 29.26 | 28.56 |
| Volume gas sampled....(DSML) | 1863 | 1842 | 1857 | 1815 |
| Moisture content.....(%V/V) | 39.20 | 39.20 | 39.20 | 39.20 |
| Oxygen content....(%V/V,DRY) | 13.80 | 13.80 | 13.80 | 13.80 |
| Nitrate in gas sample...(JG) | 455.0 | 458.0 | 500.0 | 479.0 |
| NO2 in gas sample.....(JG) | 337.6 | 339.8 | 371.0 | 355.4 |
| **NOx Concentration** | | | | |
| (GR/DSCF)..... | 0.0792 | 0.0806 | 0.0873 | 0.0856 |
| (MG/DSCM)..... | 181 | 185 | 200 | 196 |
| (PPM-DRY)..... | 95 | 96 | 104 | 102 |
| (PPM-WET)..... | 58 | 59 | 64 | 62 |
| NOX Emission rate....(LB/HR) | 16.35 | 16.65 | 18.03 | 17.67 |
| NOx emission factor..... .....(LB/MMBTU)* | 0.326 | 0.332 | 0.359 | 0.352 |

* F = 9780 DSCF/MMBTU

Test No. 9
A - Pulp Dryer Stack

**Results of Oxides of Nitrogen (NOx) Determinations---------Method 7**

| | Run 3A | Run 3B | Run 3C | Run 3D |
|---|---|---|---|---|
| Date of run..... | 11-11-93 | 11-11-93 | 11-11-93 | 11-11-93 |
| Time of run.....(HRS) | 1235 | 1255 | 1310 | 1325 |
| Flask number..... | 75 | 76 | 77 | 78 |
| Volume of flask.....(ML) | 2066 | 2093 | 2104 | 2077 |
| **Data: time of sampling** | | | | |
| flask temperature..(DEG-F) | 40.00 | 40.00 | 40.00 | 40.00 |
| bar. press.....(IN.HG) | 29.30 | 29.30 | 29.30 | 29.30 |
| flask vacuum.....(IN.HG) | 27.60 | 27.60 | 27.60 | 27.60 |
| flask abs. press...(IN.HG) | 1.70 | 1.70 | 1.70 | 1.70 |
| **Data: Time of Flask Opening** | | | | |
| flask temperature..(DEG-F) | 72.00 | 72.00 | 72.00 | 72.00 |
| lab. bar. press....(IN.HG) | 29.16 | 29.16 | 29.16 | 29.16 |
| flask static press.(IN.HG) | 0.20 | 1.50 | 0.40 | 0.70 |
| flask abs. press...(IN.HG) | 29.36 | 30.66 | 29.56 | 29.86 |
| Volume gas sampled....(DSML) | 1865 | 1978 | 1913 | 1909 |
| Moisture content.....(%V/V) | 38.96 | 38.96 | 38.96 | 38.96 |
| Oxygen content....(%V/V,DRY) | 13.90 | 13.90 | 13.90 | 13.90 |
| Nitrate in gas sample...(JG) | 487.0 | 489.0 | 499.0 | 499.0 |
| NO2 in gas sample.....(JG) | 361.3 | 362.8 | 370.2 | 370.2 |
| **NOx Concentration** | | | | |
| (GR/DSCF)..... | 0.0847 | 0.0801 | 0.0846 | 0.0848 |
| (MG/DSCM)..... | 194 | 183 | 194 | 194 |
| (PPM-DRY)..... | 101 | 96 | 101 | 101 |
| (PPM-WET)..... | 62 | 59 | 62 | 62 |
| NOX Emission rate....(LB/HR) | 17.45 | 16.52 | 17.43 | 17.47 |
| NOx emission factor..... .....(LB/MMBTU)* | 0.353 | 0.334 | 0.353 | 0.354 |

* F = 9780 DSCF/MMBTU

Test No. 5
B - Pulp Dryer Stack

**Results of Oxides of Nitrogen (NOx) Determinations---------Method 7**

| | Run 1A | Run 1B | Run 1C | Run 1D |
|---|---|---|---|---|
| Date of run..... | 11-10-93 | 11-10-93 | 11-10-93 | 11-10-93 |
| Time of run.....(HRS) | 905 | 935 | 1005 | 1055 |
| Flask number..... | 25 | 26 | 27 | 28 |
| Volume of flask.....(ML) | 2100 | 2035 | 2054 | 2031 |
| **Data: time of sampling** | | | | |
| flask temperature..(DEG-F) | 57.00 | 48.00 | 46.00 | 40.00 |
| bar. press.....(IN.HG) | 29.55 | 29.55 | 29.55 | 29.55 |
| flask vacuum.....(IN.HG) | 27.65 | 27.65 | 27.70 | 27.70 |
| flask abs. press...(IN.HG) | 1.90 | 1.90 | 1.85 | 1.85 |
| **Data: Time of Flask Opening** | | | | |
| flask temperature..(DEG-F) | 72.00 | 72.00 | 72.00 | 72.00 |
| lab. bar. press....(IN.HG) | 29.16 | 29.16 | 29.16 | 29.16 |
| flask static press.(IN.HG) | -1.30 | -0.10 | -0.50 | -0.30 |
| flask abs. press...(IN.HG) | 27.86 | 29.06 | 28.66 | 28.86 |
| Volume gas sampled....(DSML) | 1782 | 1804 | 1797 | 1789 |
| Moisture content.....(%V/V) | 23.42 | 23.42 | 23.42 | 23.42 |
| Oxygen content....(%V/V,DRY) | 17.10 | 17.10 | 17.10 | 17.10 |
| Nitrate in gas sample...(JG) | 370.0 | 333.0 | 282.0 | 280.0 |
| NO2 in gas sample.....(JG) | 274.5 | 247.1 | 209.2 | 207.8 |
| **NOx Concentration** | | | | |
| (GR/DSCF)..... | 0.0673 | 0.0598 | 0.0509 | 0.0508 |
| (MG/DSCM)..... | 154 | 137 | 116 | 116 |
| (PPM-DRY)..... | 81 | 72 | 61 | 61 |
| (PPM-WET)..... | 62 | 55 | 47 | 47 |
| NOX Emission rate....(LB/HR) | 25.03 | 22.25 | 18.92 | 18.87 |
| NOx emission factor..... .....(LB/MMBTU)* | 0.517 | 0.460 | 0.391 | 0.390 |

* F = 9780 DSCF/MMBTU

Test No. 9
A - Pulp Dryer Stack

**Results of CO Determinations ----------Method 10**

| | Run 1 | Run 2 | Run 3 |
|---|---|---|---|
| Date of run | 11-11-93 | 11-11-93 | 11-11-93 |
| Time run start/end.....(HRS) | 0930/1037 | 1100/1208 | 1230/1334 |
| Total sampling time....(MIN) | 60.0 | 60.0 | 60.0 |
| Moisture content.....(%V/V) | 41.60 | 39.20 | 38.96 |
| O2 Concentration.....(%V/V) | 13.60 | 13.80 | 13.90 |
| Volumetric flow rate (DSCFM) | 22618 | 24090 | 24043 |
| CO concentration..... | | | |
| (GR/DSCF)..... | 0.2748 | 0.2544 | 0.2290 |
| (MG/DSCM)..... | 629.10 | 582.50 | 524.25 |
| (PPM-WET)..... | 315.36 | 304.00 | 274.68 |
| (PPM-DRY)..... | 540.00 | 500.00 | 450.00 |
| (PPM-DRY @ 7% O2)..... | 1021. | 972.22 | 887.32 |
| CO emission rate.....(LB/HR) | 53.268 | 52.532 | 47.187 |

CO = Carbon monoxide

A trailing '<' symbol indicates that the true value is less than or equal to the reported value

Test No. 5
B - Pulp Dryer Stack

**Results of CO Determinations ----------Method 10**

| | Run 1 | Run 2 | Run 3 |
|---|---|---|---|
| Date of run | 11-10-93 | 11-10-93 | 11-10-93 |
| Time run start/end.....(HRS) | 0905/1106 | 1130/1332 | 1350/1551 |
| Total sampling time....(MIN) | 120.0 | 120.0 | 120.0 |
| Moisture content.....(%V/V) | 23.30 | 21.92 | 21.97 |
| O2 Concentration.....(%V/V) | 17.10 | 17.50 | 17.20 |
| Volumetric flow rate (DSCFM) | 43382 | 44674 | 43695 |
| CO concentration..... | | | |
| (GR/DSCF)..... | 0.3816 | 0.4223 | 0.3002 |
| (MG/DSCM)..... | 873.75 | 966.95 | 687.35 |
| (PPM-WET)..... | 575.25 | 648.06 | 460.38 |
| (PPM-DRY)..... | 750.00 | 830.00 | 590.00 |
| (PPM-DRY @ 7% O2)..... | 2692. | 3320. | 2173. |
| CO emission rate.....(LB/HR) | 141.903 | 161.716 | 112.436 |

CO = Carbon monoxide

A trailing '<' symbol indicates that the true value is less than or equal to the reported value

Interpoll Laboratories
(612) 786-6020

# EPA Method 5 Data Reporting Sheet
## Impinger Catch/Minnesota Protocol

Job: ACS
Team Leader: SCB
Date Submitted: 11-12-93
Test No.: 9
Date of Analysis: 11-24-93

Source: A Pulp Dryer
Test Site: Stack
Date of Test: 11-11-93
No. of Runs Completed: 3
Technician: C. Helgeson

| | | |
|---|---|---|
| 0 | Test ____ Run 0<br>Field Blank<br>Log Number ____<br>Comments ____ | Dish No. ____<br>Dish Tare Wt. ____ g<br>Dish+Sample Wt. ____ g<br>Sample Wt. ____ g |
| 1 | Test 9 Run 1<br>Log Number 1636-103<br>Comments ____ | Dish No. 61A<br>Dish Tare Wt. 51.4730 g<br>Dish+Sample Wt. 51.5067 g<br>Sample Wt. 0.0337 g |
| 2 | Test 9 Run 2<br>Log Number -105<br>Comments ____ | Dish No. 62<br>Dish Tare Wt. 50.8880 g<br>Dish+Sample Wt. 50.9082 g<br>Sample Wt. 0.0202 g |
| 3 | Test 9 Run 3<br>Log Number -107<br>Comments ____ | Dish No. 65<br>Dish Tare Wt. 44.6566 g<br>Dish+Sample Wt. 44.6734 g<br>Sample Wt. 0.0168 g |
| 4 | Test ____ Run ____<br>Log Number ____<br>Comments ____ | Dish No. ____<br>Dish Tare Wt. ____ g<br>Dish+Sample Wt. ____ g<br>Sample Wt. ____ g |
| 5 | Test ____ Run ____<br>Log Number ____<br>Comments ____ | Dish No. ____<br>Dish Tare Wt. ____ g<br>Dish+Sample Wt. ____ g<br>Sample Wt. ____ g |

Blank Solvent Wt. 0.0001 g

*Results:*

| Field Blk. | Run 1 | Run 2 | Run 3 | Run 4 | Run 5 |
|---|---|---|---|---|---|
| | 0.0336 | 0.0201 | 0.0167 | D-11 | |

LSC-03.GR

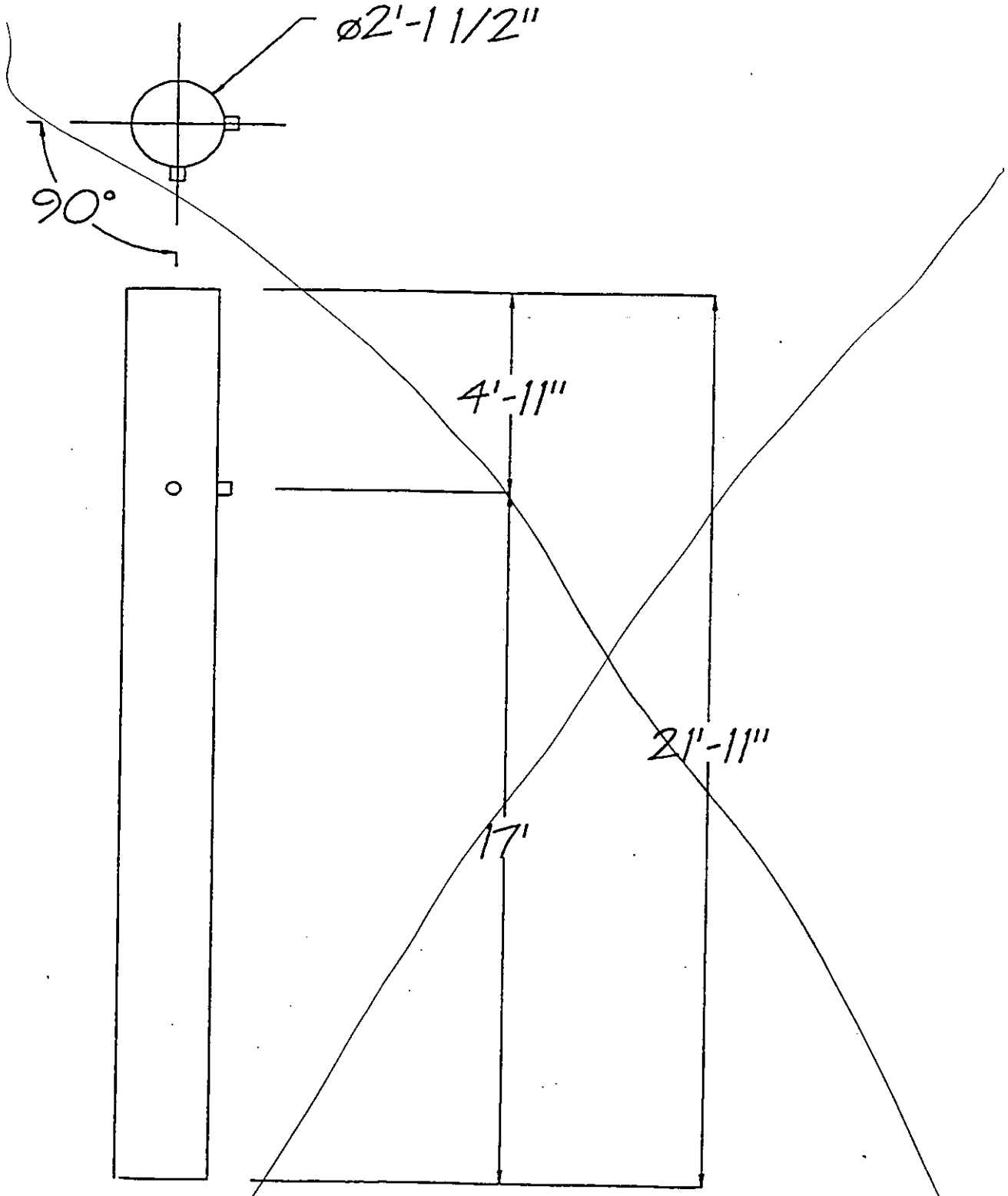


Pellet
Loadout

View Looking North

Interpoll Laboratories
(612) 786-6020

# EPA Method 5 Data Reporting Sheet
## Probe/Cyclone Wash

Job ACS
Team Leader SLB
Date Submitted 11-12-93
Test No. 9
Date of Analysis 11-23-93
Transport Leakage ☒ None ☐ _____ ml

Source A - Pulp Dryer
Test Site Stack
Date of Test 11-11-93
No. of Runs Completed 3
Technician C. Helgeson
Solvent Acetone

| | | |
|---|---|---|
| 0 | Test ____ Run 0<br>Field Blank<br>Log Number ____<br>Vol. of Solvent ____ ml<br>*Solvent Residue 4.0 ug/ml | Dish No. ____<br>Dish Tare Wt. ____ g<br>Dish+Sample Wt. ____ g<br>Sample Wt. ____ g |
| 1 | Test 9 Run 1<br>Vol. of Solvent 100 ml<br>Log Number 1636-100P<br>Comments ____ | Dish No. 46<br>Dish Tare Wt. 45.4233 g<br>Dish+Sample Wt. 45.4402 g<br>Sample Wt. 0.0169 g |
| 2 | Test 9 Run 2<br>Vol. of Solvent 110 ml<br>Log Number -101P<br>Comments ____ | Dish No. 47<br>Dish Tare Wt. 48.4658 g<br>Dish+Sample Wt. 48.4863 g<br>Sample Wt. 0.0205 g |
| 3 | Test 9 Run 3<br>Vol. of Solvent 100 ml<br>Log Number -102P<br>Comments ____ | Dish No. 48<br>Dish Tare Wt. 47.8872 g<br>Dish+Sample Wt. 47.9087 g<br>Sample Wt. 0.0215 g |
| 4 | Test ____ Run ____<br>Vol. of Solvent ____ ml<br>Log Number ____<br>Comments ____ | Dish No. ____<br>Dish Tare Wt. ____ g<br>Dish+Sample Wt. ____ g<br>Sample Wt. ____ g |
| 5 | Test ____ Run ____<br>Vol. of Solvent ____ ml<br>Log Number ____<br>Comments ____ | Dish No. ____<br>Dish Tare Wt. ____ g<br>Dish+Sample Wt. ____ g<br>Sample Wt. ____ g |

*Solvent Residue ___ ug/ml=[(Sample Wt. ____ g)(10⁶)]/Vol. of Sol. ____ ml
EPA-M5 Acetone Residue Blank Spec. ≤ 7.8 ug/ml

*Results:*

| Field Blk. | Run 1 | Run 2 | Run 3 | Run 4 | Run 5 |
|---|---|---|---|---|---|
| | 0.0165 | 0.0201 | 0.0211 | | |

D-12

SC_01VD

Interpoll Laboratories
(612) 786-6020

# EPA Method 5 Data Reporting Sheet
## Filter Gravimetrics

Job: ACS
Team Leader: SLP
Date Submitted: 11-12-93
Test No.: 9
Date of Analysis: 11-24-93

Source: A-Pulp Dryer
Test Site: Stack
Date of Test: 11-11-93
No. of Runs Completed: 3
Technician: C. Helgeson

| | | | |
|---|---|---|---|
| 0 | Test ____ Run 0<br>Field Blank<br>Log Number ____<br>Comments ____ | Filter No. ____<br>Filter Type ____<br>Filter Tare Wt. ____ g<br>Filter+Sample Wt. ____ g<br>Sample Wt. ____ g | |
| 1 | Test 9 Run 1<br>Log Number 1636-100F<br>Comments ____ | Filter No. 6014<br>Filter Type 4"GF<br>Filter Tare Wt. .8867 g<br>Filter+Sample Wt. 1.0951 g<br>Sample Wt. 0.2084 g | |
| 2 | Test 9 Run 2<br>Log Number ~101F<br>Comments ____ | Filter No. 9999<br>Filter Type 4"GF<br>Filter Tare Wt. .8785 g<br>Filter+Sample Wt. 1.0351 g<br>Sample Wt. 0.1566 g | |
| 3 | Test 9 Run 3<br>Log Number ~102F<br>Comments ____ | Filter No. 5953<br>Filter Type 4"GF<br>Filter Tare Wt. .9287 g<br>Filter+Sample Wt. 1.0998 g<br>Sample Wt. 0.1711 g | |
| 4 | Test ____ Run ____<br>Log Number ____<br>Comments ____ | Filter No. ____<br>Filter Type ____<br>Filter Tare Wt. ____ g<br>Filter+Sample Wt. ____ g<br>Sample Wt. ____ g | |
| 5 | Test ____ Run ____<br>Log Number ____<br>Comments ____ | Filter No. ____<br>Filter Type ____<br>Filter Tare Wt. ____ g<br>Filter+Sample Wt. ____ g<br>Sample Wt. ____ g | |

*Results:*

| Field Blk. | Run 1 | Run 2 | Run 3 | Run 4 | Run 5 |
|---|---|---|---|---|---|
| | 0.2084 | 0.1566 | 0.1711 | | |

| Field Blk. | Run 1 | Run 2 | Run 3 | Run 4 | Run 5 |
|---|---|---|---|---|---|
| | 0.2585 | 0.1968 | 0.2089 | | |

LSC-02PR

Campaign Day: [illegible]

Date: [illegible]

# PULP DRIER STACK TESTING

[illegible] Drier Test # [illegible]

☐ Engineering
☒ Compliance

| Hr. | Slice Rate Hr. TPH | Pre Heat F.D. Air Hr. °C | Pre Heat F.D. Air 1/2 Hr. °C | Heat Profile: Recycle Air Hr. °C | Recycle Air 1/2 Hr. °C | Throat Hr. °C | Throat 1/2 Hr. °C | Drum Exit Hr. °C | Drum Exit 1/2 Hr. °C | Air/Fuel Ratio Hr. % | Air/Fuel Ratio 1/2 Hr. % | Pressed Pulp Feed Hr. TPH | Pressed Pulp Feed 1/2 Hr. TPH | Damper Position: FD Hr. % Open | FD 1/2 Hr. % Open | Recycle Hr. % Open | Recycle 1/2 Hr. % Open | ID Hr. % Open | ID 1/2 Hr. % Open | Coal Rate Hr. TPH | Coal Rate 1/2 Hr. TPH | Grate Speed Hr. | Grate Speed 1/2 Hr. | % Moisture: Pressed Pulp Hr. % | Pressed Pulp 1/2 Hr. % | Dried Pulp Hr. % | Dried Pulp 1/2 Hr. % | Pressure Drop (Cold Screen): Multiclone Hr. "$H_2O$ | Multiclone 1/2 Hr. "$H_2O$ | Multiclone Inlet Hr. "$H_2O$ | Multiclone Inlet 1/2 Hr. "$H_2O$ | Pressure Readings: Furnace Hr. "$H_2O$ | Furnace Exit Hr. "$H_2O$ | Manometer Readings: Multiclone Inlet Hr. "$H_2O$ | FD Duct Hr. "$H_2O$ | Recycle Airflow (Control) | Hopper Filter D.P. "$H_2O$ | $O_2$ % | Moisture | |
|---|---|---|---|---|---|---|---|---|---|---|---|---|---|---|---|---|---|---|---|---|---|---|---|---|---|---|---|---|---|---|---|---|---|---|---|---|---|---|---|---|
| 8 | 315 | - | - | - | - | 787 | 782 | 108 | 108 | - | - | 22.7 | 22.7 | 41.6 | 39.8 | | | 60 | | - | - | 32.3 | 31.4 | 72 | 72.1 | 7.7 | 8.6 | 5.90 | 5.78 | 6.46 | 6.66 | -.07 | -.57 | 6.00 | .2 | [illegible] | [illegible] | 9.2 | [illegible] | Hr |
| | | | | | | | | | | | | | | | | | | | | | | | | | | | | | | | | | | 6.00 | .2 | [illegible] | [illegible] | — | [illegible] | 1/2 |
| 9 | 316 | - | - | - | - | 777 | 774 | 108 | 108 | - | - | 20.8 | 20.1 | 34.7 | 34.4 | | | 60 | | - | - | 22.9 | 23.3 | 72.8 | 73.5 | 8.5 | 7.6 | 5.94 | 5.64 | 6.47 | 6.45 | -.15 | -.42 | 6.00 | .2 | [illegible] | 4.55 | 9.7 | 11.55 | Hr |
| | | | | | | | | | | | | | | | | | | | | | | | | | | | | | | | | | | 6.00 | .2 | [illegible] | 4.30 | [illegible] | 11.61 | 1/2 |
| 10 | [illegible] | - | - | - | - | [illegible] | 801 | 107 | 107 | - | - | 22.9 | 24.1 | 41.6 | 41.6 | | | 60 | | - | - | 32.0 | 34.1 | 73.3 | 73.5 | 8.1 | 10.2 | 5.80 | [illegible] | 6.64 | 6.64 | -.07 | -.59 | 6.40 | .2 | 3488 | [illegible] | 8.67 | [illegible] | Hr |
| | | | | | | | | | | | | | | | | | | | | | | | | | | | | | | | | | | 6.00 | .2 | [illegible] | 4.61 | — | 11.35 | 1/2 |
| 11 | 317 | - | - | - | - | 786 | 797 | 108 | 108 | - | - | 21.5 | 22.4 | 41.2 | 39.9 | | | 60 | | - | - | 31.6 | 30.9 | 73.5 | 72.7 | 9.3 | 8.6 | 5.94 | 5.77 | 6.61 | 6.64 | -.13 | -.61 | 6.00 | .2 | [illegible] | [illegible] | [illegible] | [illegible] | Hr |
| | | | | | | | | | | | | | | | | | | | | | | | | | | | | | | | | | | 6.00 | .2 | [illegible] | 4.27 | — | [illegible] | 1/2 |
| 12 | 315 | - | - | - | - | 802 | 804 | 107 | 108 | - | - | 23.2 | 22.5 | 43.1 | 96.4 | | | 60 | | - | - | 33.6 | 30.6 | 72.7 | 72.9 | 9.1 | 8.6 | 5.78 | 5.66 | 6.64 | [illegible] | -.11 | -.60 | 6.0 | .2 | 3502 | 4.68 | 9.27 | 11.78 | Hr |
| | | | | | | | | | | | | | | | | | | | | | | | | | | | | | | | | | | 6.0 | .2 | [illegible] | [illegible] | — | [illegible] | 1/2 |
| 1 | 321 | - | - | - | - | 775 | 806 | 107 | 107 | - | - | 22.6 | 21.9 | 43.0 | 34.8 | | | 60 | | - | - | 31.2 | 31.8 | | | 8.5 | | 5.76 | 5.67 | 6.64 | 6.64 | -.15 | -.60 | 6.0 | .2 | [illegible] | 4.31 | | [illegible] | Hr |
| | | | | | | | | | | | | | | | | | | | | | | | | | | | | | | | | | | 6.0 | .2 | 3504 | 4.67 | | 11.01 | 1/2 |
| 2 | | - | - | - | - | | | | | - | - | | | | | | | 60 | | - | - | | | | | | | | | | | | | | | | | | | Hr |
| | | | | | | | | | | | | | | | | | | | | | | | | | | | | | | | | | | | | | | | | 1/2 |
| [illegible] | | - | - | - | | | | | | - | - | | | | | | | 60 | | - | - | | | | | | | | | | | | | | | | | | | Hr |
| | | | | | | | | | | | | | | | | | | | | | | | | | | | | | | | | | | | | | | | | 1/2 |
| [illegible] | | - | - | - | | | | | | - | - | | | | | | | 60 | | - | - | | | | | | | | | | | | | | | | | | | Hr |
| | | | | | | | | | | | | | | | | | | | | | | | | | | | | | | | | | | | | | | | | 1/2 |
| [illegible] | | - | - | - | - | | | | | - | - | | | | | | | 60 | | - | - | | | | | | | | | | | | | | | | | | | Hr |
| | | | | | | | | | | | | | | | | | | | | | | | | | | | | | | | | | | | | | | | | 1/2 |

Air Registers:

Run #1:
Closed
25%
50%
75%
100%

Run #2:
Closed
25%
50%
75%
100%

Run 1
Start: [illegible]
End: [illegible]

Run 2
Start: [illegible]
End:

| Controller Name: | Ratio | Bias |
|---|---|---|
| | | |
| | | |
| | | |
| | | |

NOTES: Run 1

NOTES: Run 2

~~GENERAL NOTES:~~ Run 3

[illegible] : 12:40 - 12:45

LAPCO : 12:45 - 1:00

CACJ E7111001

Filename: BEET20.WQ1
Date: 31-Jan-95
Facility: American Crystal Sugar
Location: East Grand Forks, Minnesota
Source: Coal-fired pulp dryer 'A' (several other sources were tested, but process data are not provided for these sources)
Test date: November 11, 1993

D. Emission Data/Mass Flux Rates/Emission Factors

| Test ID | Parameter | Units | Values reported | | | |
|---|---|---|---|---|---|---|
| | | | Run 1 | Run 2 | Run 3 | Run 4 |
| 1 | Stack temperature | Deg F | 214 | 214 | 215 | |
| Pulp | Pressure | in. HG | 29.30 | 29.30 | 29.30 | |
| dryer | Moisture | % | 41.60 | 39.20 | 38.96 | |
| A | Oxygen | % | 13.6 | 13.8 | 13.9 | |
| | Volumetric flow, actual | acfm | 50585 | 51776 | 51507 | |
| | Volumetric flow | scfm | 38806 | 39720 | 39455 | |
| | Volumetric flow, standard* | dscfm | 22663 | 24150 | 24083 | |
| | Isokinetic variation | % | 105.1 | 101.1 | 102 | |
| Pressed pulp feed to dryer | | TPH | 23.0 | 22.0 | 22.6 | |
| | Pollutant concentrations: | | | | | |
| | Total PM | G/dscf | 0.0606 | 0.069 | 0.0776 | |
| | Filterable PM | G/dscf | 0.0538 | 0.0624 | 0.07180 | |
| | Condensible organic PM | G/dscf | 0.00680 | 0.00660 | 0.00580 | |
| | CO2 | % vol | 5.2 | 5.6 | 5.6 | |
| | SO2 | ppmdv | 21 | 16 | 16 | |
| | NOx | ppmdv | 95 | 99 | 100 | |
| | THC as carbon | ppmwv | 310 | 264 | 246 | |
| | CO | ppmdv | 540 | 500 | 450 | |
| | Pollutant mass flux rates: | | | | | |
| | Filterable PM | lb/hr | 10.45 | 12.92 | 14.82 | |
| | Condensible organic PM | lb/hr | 1.321 | 1.366 | 1.197 | |
| | CO2 | lb/hr | 8076 | 9268 | 9243 | |
| | SO2 | lb/hr | 4.75 | 3.85 | 3.84 | |
| | NOx | lb/hr | 15.4 | 17.1 | 17.3 | |
| | THC as carbon | lb/hr | 22.5 | 19.6 | 18.1 | |
| | THC as methane | lb/hr | 30.0 | 26.1 | 24.2 | |
| | CO | lb/hr | 53.4 | 52.7 | 47.3 | |
| | Emission factors (ENGLISH UNITS): | | | | | AVERAGE |
| | Filterable PM | lb/ton | 0.45 | 0.59 | 0.66 | 0.57 |
| | Condensible organic PM | lb/ton | 0.057 | 0.062 | 0.053 | 0.058 |
| | CO2 | lb/ton | 351 | 422 | 410 | 394 |
| | SO2 | lb/ton | 0.21 | 0.18 | 0.17 | 0.18 |
| | NOx | lb/ton | 0.67 | 0.78 | 0.77 | 0.74 |
| | THC as methane | lb/ton | 1.3 | 1.2 | 1.1 | 1.2 |
| | CO | lb/ton | 2.3 | 2.4 | 2.1 | 2.3 |
| | Emission factors (METRIC UNITS): | | | | | AVERAGE |
| | Filterable PM | kg/Mg | 0.23 | 0.29 | 0.33 | 0.28 |
| | Condensible organic PM | kg/Mg | 0.029 | 0.031 | 0.027 | 0.029 |
| | CO2 | kg/Mg | 176 | 211 | 205 | 197 |
| | SO2 | kg/Mg | 0.10 | 0.088 | 0.085 | 0.092 |
| | NOx | kg/Mg | 0.34 | 0.39 | 0.38 | 0.37 |
| | THC as methane | kg/Mg | 0.65 | 0.60 | 0.54 | 0.59 |
| | CO | kg/Mg | 1.2 | 1.2 | 1.0 | 1.1 |

*DSCFM BASED ON A STANDARD TEMPERATURE OF 68 DEGREES FAHRENHEIT

The oxides of nitrogen samples were collected during the particulate determinations using an all-glass Method 7 sampling train. A heated stainless steel probe was used to extract the samples from the exhaust stream. A plug of glass-wool was used in the end of the probe to remove particulate material.

The $NO_x$ samples were collected in volume-calibrated two-liter all-glass flasks. An aliquot of 25 cc of absorbing solution was added to each flask on-site; the flask was closed; inserted into the sampling train; and evacuated. The probe was then purged and the sample collected over a 15 second interval. The flask was then closed; the flask removed from the sampling train; shook for two minutes and then secured for transport to the laboratory.

Upon arrival at the laboratory, the $NO_x$ samples are logged in, placed in a designated area and maintained at 72 °F for 24 hours to allow completion of the conversion of NO to $NO_2$ and absorption in the acidified peroxide reagent. The flasks are then shook to complete absorption; attached to a mercury manometer and the static pressure and temperature recorded. The samples are then recovered and analyzed by ion chromatography.

Total gaseous hydrocarbon concentrations were determined instrumentally using a Ratfisch Model RS55 heated flame ionization detector (HFID) calibrated against propane in air standards. The THC concentration was continuously monitored by extracting a slipstream of exhaust gas by means of a heated probe and filter holder. A heat-traced teflon line was used to transport the sample gas from the filter holder outlet to the analyzer inlet.

An integrated flue gas sample was extracted simultaneously with each particulate sample using a specially designed gas sampling system. Integrated flue gas samples were collected in 44-liter Tedlar bags housed in a protective aluminum container. After sampling was complete, the bags were sealed and returned to the laboratory for Orsat analysis. Prior to sampling, the Tedlar bags are leak checked at 15 IN.HG. vacuum with an in-line rotameter. Bags with any detectable inleakage are discarded. The integrated flue gas samples on the A, B, and C Pulp Dryers and the No. 1 and 2 Boilers were also analyzed for carbon monoxide in accordance with EPA Method 10 (NDIR).

Testing on the "A" Pulp Dryer Stack was conducted from 2 test ports oriented at 90 degrees on the stack. The test ports are located diameters 2 downstream and 5.5 diameters

upstream of the nearest flow disturbances. A 24-point traverse was used to collect representative particulate samples. Each traverse point was sampled 2.5 minutes to give a total sampling time of 60 minutes per run. Visible emission determinations were unable to be performed due to converging plumes.

Testing on the "B" Pulp Dryer Stack was conducted from 2 test ports oriented at 90 degrees on the stack. The test ports are located 2 diameters downstream of a flow straightener and 2 diameters upstream of the nearest flow disturbances. A 24-point traverse was used to collect representative particulate samples. Each traverse point was sampled 2.5 minutes to give a total sampling time of 60 minutes per run. Visible emission determinations were unable to be performed due to converging plumes.

Testing on the "C" Pulp Dryer Stack was conducted from 2 test ports oriented at 90 degrees on the stack. The test ports are located 2 diameters downstream and 2 diameters upstream of the nearest flow disturbances. A 24-point traverse was used to collect representative particulate samples. Each traverse point was sampled 2.5 minutes to give a total sampling time of 60 minutes per run. Visible emission determinations were unable to be performed due to converging plumes.

Testing on the No. 1 Boiler Stack was conducted from 4 test ports oriented at 90 degrees on the stack. The test ports are located 4.5 diameters downstream and 2.4 diameters upstream of the nearest flow disturbances. A 24-point traverse was used to collect representative particulate samples. Each traverse point was sampled 2.5 minutes to give a total sampling time of 60 minutes per run.

Testing on the No. 2 Boiler Stack was conducted from 4 test ports oriented at 90 degrees on the stack. The test ports are located 4.5 diameters downstream and 2.4 diameters upstream of the nearest flow disturbances. A 24-point traverse was used to collect representative particulate samples. Each traverse point was sampled 2.5 minutes to give a total sampling time of 60 minutes per run.

Testing on the "E" Pellet Cooler Stack was conducted from 2 test ports oriented at 90 degrees on the stack. The test ports are located 4.2 diameters downstream and 2.1 diameters upstream of the nearest flow disturbances. A 12-point traverse was used to collect

representative particulate samples. Each traverse point was sampled 5 minutes to give a total sampling time of 60 minutes per run.

Testing on the "W" Pellet Cooler Stack was conducted from 2 test ports oriented at 90 degrees on the stack. The test ports are located 4.2 diameters downstream and 2.1 diameters upstream of the nearest flow disturbances. A 12-point traverse was used to collect representative particulate samples. Each traverse point was sampled 5 minutes to give a total sampling time of 60 minutes per run.

Testing on the Pellet Loadout Stack was conducted from 2 test ports oriented at 90 degrees on the stack. The test ports are located approximately 7.9 diameters downstream and 2.3 diameters upstream of the nearest flow disturbances. A 16-point traverse was used to collect representative particulate samples. Each traverse point was sampled 4 minutes to give a total sampling time of 64 minutes per run.

The important results of the test are summarized in Section 2. Detailed results are presented in Section 3. Field data and all other supporting information are presented in the appendices.

## 2 SUMMARY AND DISCUSSION

The results of the air emission tests are summarized in Tables 1 - 13. The compliance status of each source in each parameter is presented in the tables below.

### PARTICULATE COMPLIANCE STATUS

| EMISSION POINT Number | SOURCE NAME | *PM Emission Limit* (LB/HR) | PM Emission Rate (LB/HR) |
|---|---|---|---|
| 3 | "A" Pulp Dryer | 15.94 | 16.12 |
| 4 | "B" Pulp Dryer | 17.94 | 21.02 |
| 5 | "C" Pulp Dryer | 14.62 | 14.51 |
| 1 | No. 1 Boiler | 14.6 | 35.9 |
| 2 | No. 2 Boiler | 14.6 | 47.9 |
| 6 | "E" Pellet Cooler | 15.94 | 3.5 |
| 7 | "W" Pellet Cooler | 15.94 | 11.2 |
| 8 | Pellet Loadout | 8.22 | 0.077 |

### SULFUR DIOXIDE COMPLIANCE STATUS

| EMISSION POINT Number | SOURCE NAME | *$SO_2$ Emission Limit* (LB/HR) | $SO_2$ Emission Rate (LB/HR) |
|---|---|---|---|
| 3 | "A" Pulp Dryer | 8.84 | 4.19 |
| 4 | "B" Pulp Dryer | 11.16 | 7.02 |
| 5 | "C" Pulp Dryer | 8.84 | 4.58 |

Table 2b. Summary of the Results of the November 10, 1993 Particulate Emission Test on the B - Pulp Dryer Stack at the American Crystal Sugar Plant Located in East Grand Forks, Minnesota.

| ITEM | Run 1 | Run 2 | Run 3 |
|---|---|---|---|
| Date of test | 11-10-93 | 11-10-93 | 11-10-93 |
| Time runs were done (HRS) | 905/1106 | 1130/1332 | 1350/1551 |
| * Process rate | | | |
| Volumetric flow | | | |
| actual (ACFM) | 76428 | 76312 | 74513 |
| standard (DSCFM) | 43382 | 44674 | 43695 |
| Gas temperature (DEG-F) | 243 | 234 | 232 |
| Moisture content (%V/V) | 23.30 | 21.92 | 21.97 |
| Gas composition (%V/V,dry) | | | |
| carbon dioxide | 3.40 | 3.00 | 3.30 |
| oxygen | 17.10 | 17.50 | 17.20 17.27 |
| nitrogen | 79.50 | 79.50 | 79.50 |
| Isokinetic variation (%) | 103.9 | 96.0 | 99.6 |
| Particulate concentration | | | |
| actual (GR/ACF) | .0257 | .0350 | .0313 |
| standard (GR/DSCF) | .0454 | .0599 | .0533 |
| Part. emission rate (LB/HR) | 16.87 | 22.92 | 19.97 |

* For Process Rate Information, See Appendix E

Note: Dry Catch Only

Table 3a. Summary of the Results of the November 9, 1993 Particulate Emission Test on the C - Pulp Dryer Stack at the American Crystal Sugar Plant Located in East Grand Forks, Minnesota.

| ITEM | Run 1 | Run 2 | Run 3 |
|---|---|---|---|
| Date of test | 11-09-93 | 11-09-93 | 11-09-93 |
| Time runs were done (HRS) | 1030/1235 | 1315/1517 | 1535/1738 |
| * Process rate | | | |
| Volumetric flow | | | |
| actual (ACFM) | 48759 | 47866 | 48553 |
| standard (DSCFM) | 24867 | 25356 | 23446 |
| Gas temperature (DEG-F) | 216 | 215 | 216 |
| Moisture content (%V/V) | 33.61 | 31.13 | 37.16 |
| Gas composition (%V/V,dry) | | | |
| carbon dioxide | 5.20 | 5.60 | 5.60 |
| oxygen | 15.20 | 14.70 | 14.70 14.87 |
| nitrogen | 79.60 | 79.70 | 79.70 |
| Isokinetic variation (%) | 108.1 | 96.4 | 106.8 |
| Particulate concentration | | | |
| actual (GR/ACF) | .0309 | .0366 | .0375 |
| standard (GR/DSCF) | .0606 | .0690 | .0776 |
| Part. emission rate (LB/HR) | 12.93 | 15.00 | 15.60 |

Note: Dry + Organic Wet Catch

* For Process Rate Information - See Appendix E.

Table 3b. Summary of the Results of the November 9, 1993 Particulate Emission Test on the C - Pulp Dryer Stack at the American Crystal Sugar Plant Located in East Grand Forks, Minnesota.

| ITEM | Run 1 | Run 2 | Run 3 |
|---|---|---|---|
| Date of test | 11-09-93 | 11-09-93 | 11-09-93 |
| Time runs were done (HRS) | 1030/1235 | 1315/1517 | 1535/1738 |
| * Process rate | | | |
| Volumetric flow | | | |
| actual (ACFM) | 48759 | 47866 | 48553 |
| standard (DSCFM) | 24867 | 25356 | 23446 |
| Gas temperature (DEG-F) | 216 | 215 | 216 |
| Moisture content (%V/V) | 33.61 | 31.13 | 37.16 |
| Gas composition (%V/V,dry) | | | |
| carbon dioxide | 5.20 | 5.60 | 5.60 |
| oxygen | 15.20 | 14.70 | 14.70 |
| nitrogen | 79.60 | 79.70 | 79.70 |
| Isokinetic variation (%) | 108.1 | 96.4 | 106.8 |
| Particulate concentration | | | |
| actual (GR/ACF) | .0274 | .0330 | .0347 |
| standard (GR/DSCF) | .0538 | .0624 | .0718 |
| Part. emission rate (LB/HR) | 11.47 | 13.55 | 14.44 |

* For Process Rate Information, See Appendix E

Note: Dry Catch Only

Table 6a. Summary of the Results of the November 11, 1993 Particulate Emission Test on the East Pellet Cooler Stack at the American Crystal Sugar Plant Located in East Grand Forks, Minnesota.

| ITEM | Run 1 | Run 2 | Run 3 |
|---|---|---|---|
| Date of test | 11-11-93 | 11-11-93 | 11-11-93 |
| Time runs were done (HRS) | 1415/1517 | 1545/1648 | 1705/1808 |
| * Process rate | | | |
| Volumetric flow | | | |
| actual (ACFM) | 14158 | 14278 | 14238 |
| standard (DSCFM) | 11849 | 11920 | 12073 |
| Gas temperature (DEG-F) | 134 | 134 | 128 |
| Moisture content (%V/V) | 3.54 | 3.89 | 3.40 |
| Gas composition (%V/V,dry) | | | |
| carbon dioxide | 0.03 | 0.03 | 0.03 |
| oxygen | 20.90 | 20.90 | 20.90 |
| nitrogen | 79.07 | 79.07 | 79.07 |
| Isokinetic variation (%) | 100.0 | 100.0 | 99.6 |
| Particulate concentration | | | |
| actual (GR/ACF) | .0278 | .0308 | .0275 |
| standard (GR/DSCF) | .0332 | .0369 | .0324 |
| Part. emission rate (LB/HR) | 3.37 | 3.77 | 3.36 |

Note: Dry + Organic Wet Catch

* For Process Rate Information - See Appendix E.

Table 6b. Summary of the Results of the November 11, 1993 Particulate Emission Test on the East Pellet Cooler Stack at the American Crystal Sugar Plant Located in East Grand Forks, Minnesota.

| ITEM | Run 1 | Run 2 | Run 3 |
|---|---|---|---|
| Date of test | 11-11-93 | 11-11-93 | 11-11-93 |
| Time runs were done (HRS) | 1415/1517 | 1545/1648 | 1705/1808 |
| * Process rate | | | |
| Volumetric flow | | | |
| actual (ACFM) | 14158 | 14278 | 14238 |
| standard (DSCFM) | 11849 | 11920 | 12073 |
| Gas temperature (DEG-F) | 134 | 134 | 128 |
| Moisture content (%V/V) | 3.54 | 3.89 | 3.40 |
| Gas composition (%V/V,dry) | | | |
| carbon dioxide | 0.03 | 0.03 | 0.03 |
| oxygen | 20.90 | 20.90 | 20.90 |
| nitrogen | 79.07 | 79.07 | 79.07 |
| Isokinetic variation (%) | 100.0 | 100.0 | 99.6 |
| Particulate concentration | | | |
| actual (GR/ACF) | .0270 | .0304 | .0270 |
| standard (GR/DSCF) | .0323 | .0364 | .0319 |
| Part. emission rate (LB/HR) | 3.28 | 3.72 | 3.30 |

* For Process Rate Information, See Appendix E

Note: Dry Catch Only

Table 7a. Summary of the Results of the November 11, 1993 Particulate Emission Test on the West Pellet Cooler Stack at the American Crystal Sugar Plant Located in East Grand Forks, Minnesota.

| ITEM | Run 1 | Run 2 | Run 3 |
|---|---|---|---|
| Date of test | 11-11-93 | 11-11-93 | 11-11-93 |
| Time runs were done (HRS) | 935/1038 | 1103/1205 | 1245/1348 |
| *Process rate | | | |
| Volumetric flow | | | |
| actual (ACFM) | 15063 | 15396 | 15555 |
| standard (DSCFM) | 12908 | 12779 | 13123 |
| Gas temperature (DEG-F) | 124 | 138 | 135 |
| Moisture content (%V/V) | 2.92 | 3.70 | 2.65 |
| Gas composition (%V/V,dry) | | | |
| carbon dioxide | 0.03 | 0.03 | 0.03 |
| oxygen | 20.90 | 20.90 | 20.90 |
| nitrogen | 79.07 | 79.07 | 79.07 |
| Isokinetic variation (%) | 100.1 | 100.6 | 98.8 |
| Particulate concentration | | | |
| actual (GR/ACF) | .0796 | .0773 | .0979 |
| standard (GR/DSCF) | .0929 | .0932 | 0.116 |
| Part. emission rate (LB/HR) | 10.28 | 10.21 | 13.06 |

Note: Dry + Organic Wet Catch

* For Process Rate Information - See Appendix E.

Table 7b. Summary of the Results of the November 11, 1993 Particulate Emission Test on the West Pellet Cooler Stack at the American Crystal Sugar Plant Located in East Grand Forks, Minnesota.

| ITEM | Run 1 | Run 2 | Run 3 |
|---|---|---|---|
| Date of test | 11-11-93 | 11-11-93 | 11-11-93 |
| Time runs were done (HRS) | 935/1038 | 1103/1205 | 1245/1348 |
| * Process rate | | | |
| Volumetric flow | | | |
| actual (ACFM) | 15063 | 15396 | 15555 |
| standard (DSCFM) | 12908 | 12779 | 13123 |
| Gas temperature (DEG-F) | 124 | 138 | 135 |
| Moisture content (%V/V) | 2.92 | 3.70 | 2.65 |
| Gas composition (%V/V,dry) | | | |
| carbon dioxide | 0.03 | 0.03 | 0.03 |
| oxygen | 20.90 | 20.90 | 20.90 |
| nitrogen | 79.07 | 79.07 | 79.07 |
| Isokinetic variation (%) | 100.1 | 100.6 | 98.8 |
| Particulate concentration | | | |
| actual (GR/ACF) | .0792 | .0765 | .0974 |
| standard (GR/DSCF) | .0925 | .0922 | 0.115 |
| Part. emission rate (LB/HR) | 10.23 | 10.10 | 12.99 |

* For Process Rate Information, See Appendix E
Note: Dry Catch Only

Table 8a. Summary of the Results of the November 11, 1993 Particulate Emission Test on the Pellet Loadout Stack at the American Crystal Sugar Plant Located in East Grand Forks, Minnesota.

| ITEM | Run 1 | Run 2 | Run 3 |
|---|---|---|---|
| Date of test | 11-11-93 | 11-11-93 | 11-11-93 |
| Time runs were done (HRS) | 1445/1549 | 1620/1721 | 1755/1856 |
| *Process rate | | | |
| Volumetric flow | | | |
| actual (ACFM) | 4204 | 4211 | 4240 |
| standard (DSCFM) | 4344 | 4364 | 4436 |
| Gas temperature (DEG-F) | 37 | 35 | 31 |
| Moisture content (%V/V) | 0.74 | 0.70 | 0.60 |
| Gas composition (%V/V,dry) | | | |
| carbon dioxide | 0.03 | 0.03 | 0.03 |
| oxygen | 20.90 | 20.90 | 20.90 |
| nitrogen | 79.07 | 79.07 | 79.07 |
| Isokinetic variation (%) | 99.5 | 100.0 | 100.0 |
| Particulate concentration | | | |
| actual (GR/ACF) | .00346 | .00182 | .00110 |
| standard (GR/DSCF) | .00335 | .00175 | .00105 |
| Part. emission rate (LB/HR) | 0.125 | 0.066 | 0.040 |

Note: Dry + Organic Wet Catch

*For Process Rate Information - See Appendix E.

Test No. 1
C - Pulp Dryer Stack

**Results of Volumetric Flow Rate Determination-------Method 2**

| | |
|---|---|
| Date of Determination..... | 11-09-93 |
| Time of Determination.....(HRS) | 927 |
| Barometric pressure.....(IN.HG) | 29.51 |
| Pitot tube coefficient..... | .84 |
| Number of sampling ports..... | 2 |
| Total number of points..... | 24 |
| Shape of duct..... | Round |
| Stack diameter.....(IN) | 48 |
| Duct area.....(SQ.FT) | 12.57 |
| Direction of flow..... | UP |
| Static pressure.....(IN.WC) | -1.02 |
| Avg. gas temp.....(DEG-F) | 215 |
| Moisture content.....(% V/V) | 33.61 |
| Avg. linear velocity.....(FT/SEC) | 63.2 |
| Gas density.....(LB/ACF) | .05115 |
| Molecular weight.....(LB/LBMOLE) | 29.44 |
| Mass flow of gas.....(LB/HR) | 146290 |
| Volumetric flow rate..... | |
| actual.....(ACFM) | 47667 |
| dry standard.....(DSCFM) | 24354 |

Test No. 5
B - Pulp Dryer Stack

**Results of Volumetric Flow Rate Determination-------Method 2**

| | |
|---|---|
| Date of Determination..... | 11-10-93 |
| Time of Determination.....(HRS) | 807 |
| Barometric pressure.....(IN.HG) | 29.55 |
| Pitot tube coefficient..... | .84 |
| Number of sampling ports..... | 2 |
| Total number of points..... | 24 |
| Shape of duct..... | Round |
| Stack diameter.....(IN) | 59 |
| Duct area.....(SQ.FT) | 18.99 |
| Direction of flow..... | UP |
| Static pressure.....(IN.WC) | -.98 |
| Avg. gas temp.....(DEG-F) | 231 |
| Moisture content.....(% V/V) | 23.30 |
| Avg. linear velocity.....(FT/SEC) | 63.3 |
| Gas density.....(LB/ACF) | .05201 |
| Molecular weight.....(LB/LBMOLE) | 29.23 |
| Mass flow of gas.....(LB/HR) | 225180 |
| Volumetric flow rate..... | |
| actual.....(ACFM) | 72162 |
| dry standard.....(DSCFM) | 41655 |

Test No. 10
East Pellet Cooler Stack

**Results of Volumetric Flow Rate Determination-------Method 2**

| | |
|---|---|
| Date of Determination..... | 11-11-93 |
| Time of Determination.....(HRS) | 1400 |
| Barometric pressure.....(IN.HG) | 29.26 |
| Pitot tube coefficient..... | .84 |
| Number of sampling ports..... | 2 |
| Total number of points..... | 12 |
| Shape of duct..... | Round |
| Stack diameter.....(IN) | 23 |
| Duct area.....(SQ.FT) | 2.89 |
| Direction of flow..... | DOWN |
| Static pressure.....(IN.WC) | -.46 |
| Avg. gas temp.....(DEG-F) | 129 |
| Moisture content.....(% V/V) | 3.54 |
| Avg. linear velocity.....(FT/SEC) | 82.0 |
| Gas density.....(LB/ACF) | .06469 |
| Molecular weight.....(LB/LBMOLE) | 28.84 |
| Mass flow of gas.....(LB/HR) | 55103 |
| Volumetric flow rate..... | |
| actual.....(ACFM) | 14197 |
| dry standard.....(DSCFM) | 11987 |

Test No. 12
Pellet Loadout Stack

**Results of Volumetric Flow Rate Determination-------Method 2**

| | |
|---|---|
| Date of Determination..... | 11-11-93 |
| Time of Determination.....(HRS) | 1430 |
| Barometric pressure.....(IN.HG) | 29.3 |
| Pitot tube coefficient..... | .84 |
| Number of sampling ports..... | 2 |
| Total number of points..... | 16 |
| Shape of duct..... | Round |
| Stack diameter.....(IN) | 25.75 |
| Duct area.....(SQ.FT) | 3.62 |
| Direction of flow..... | UP |
| Static pressure.....(IN.WC) | -.062 |
| Avg. gas temp.....(DEG-F) | 0 |
| Moisture content.....(% V/V) | 0.74 |
| Avg. linear velocity.....(FT/SEC) | 18.9 |
| Gas density.....(LB/ACF) | .08394 |
| Molecular weight.....(LB/LBMOLE) | 28.84 |
| Mass flow of gas.....(LB/HR) | 20643 |
| Volumetric flow rate..... | |
| actual.....(ACFM) | 4099 |
| dry standard.....(DSCFM) | 4573 |

Test No. 13
West Pellet Cooler Stack

**Results of Volumetric Flow Rate Determination-------Method 2**

| | |
|---|---|
| Date of Determination..... | 11-11-93 |
| Time of Determination.....(HRS) | 905 |
| Barometric pressure.....(IN.HG) | 29.26 |
| Pitot tube coefficient..... | .84 |
| Number of sampling ports..... | 2 |
| Total number of points..... | 12 |
| Shape of duct..... | Round |
| Stack diameter.....(IN) | 23 |
| Duct area.....(SQ.FT) | 2.89 |
| Direction of flow..... | DOWN |
| Static pressure.....(IN.WC) | -.5 |
| Avg. gas temp.....(DEG-F) | 133 |
| Moisture content.....(% V/V) | 2.92 |
| Avg. linear velocity.....(FT/SEC) | 87.6 |
| Gas density.....(LB/ACF) | .06438 |
| Molecular weight.....(LB/LBMOLE) | 28.84 |
| Mass flow of gas.....(LB/HR) | 58599 |
| Volumetric flow rate..... | |
| actual.....(ACFM) | 15169 |
| dry standard.....(DSCFM) | 12800 |

Test No. 1
C - Pulp Dryer Stack

**Results of Orsat & Moisture Analyses-----Methods 3 & 4(%v/v)**

| | Run 1 | Run 2 | Run 3 |
|---|---|---|---|
| Date of run | 11-09-93 | 11-09-93 | 11-09-93 |
| **Dry basis (orsat)** | | | |
| carbon dioxide..... | 5.20 | 5.60 | 5.60 |
| oxygen..... | 15.20 | 14.70 | 14.70 |
| nitrogen..... | 79.60 | 79.70 | 79.70 |
| **Wet basis (orsat)** | | | |
| carbon dioxide..... | 3.45 | 3.86 | 3.52 |
| oxygen..... | 10.09 | 10.12 | 9.24 |
| nitrogen..... | 52.85 | 54.89 | 50.08 |
| water vapor..... | 33.61 | 31.13 | 37.16 |
| Dry molecular weight..... | 29.44 | 29.48 | 29.48 |
| Wet molecular weight..... | 25.60 | 25.91 | 25.22 |
| Specific gravity..... | 0.884 | 0.895 | 0.871 |
| Water mass flow.....(LB/HR) | 35310 | 32147 | 38896 |
| FO | 1.096 | 1.107 | 1.107 |

Test No. 5
B - Pulp Dryer Stack

**Results of Orsat & Moisture Analyses-----Methods 3 & 4(%v/v)**

| | Run 1 | Run 2 | Run 3 |
|---|---|---|---|
| Date of run | 11-10-93 | 11-10-93 | 11-10-93 |
| **Dry basis (orsat)** | | | |
| carbon dioxide..... | 3.40 | 3.00 | 3.30 |
| oxygen..... | 17.10 | 17.50 | 17.20 |
| nitrogen..... | 79.50 | 79.50 | 79.50 |
| **Wet basis (orsat)** | | | |
| carbon dioxide..... | 2.61 | 2.34 | 2.57 |
| oxygen..... | 13.12 | 13.66 | 13.42 |
| nitrogen..... | 60.98 | 62.07 | 62.03 |
| water vapor..... | 23.30 | 21.92 | 21.97 |
| Dry molecular weight..... | 29.23 | 29.18 | 29.22 |
| Wet molecular weight..... | 26.61 | 26.73 | 26.75 |
| Specific gravity..... | 0.919 | 0.923 | 0.924 |
| Water mass flow.....(LB/HR) | 36957 | 35176 | 34517 |
| FO | 1.118 | 1.133 | 1.121 |

Test No. 9
A - Pulp Dryer Stack

**Results of Orsat & Moisture Analyses-----Methods 3 & 4(%v/v)**

| | Run 1 | Run 2 | Run 3 |
|---|---|---|---|
| Date of run | 11-11-93 | 11-11-93 | 11-11-93 |
| **Dry basis (orsat)** | | | |
| carbon dioxide..... | 6.60 | 3.30 | 6.30 |
| oxygen..... | 13.60 | 13.80 | 13.90 |
| nitrogen..... | 79.80 | 82.90 | 79.80 |
| **Wet basis (orsat)** | | | |
| carbon dioxide..... | 3.85 | 2.01 | 3.85 |
| oxygen..... | 7.94 | 8.39 | 8.48 |
| nitrogen..... | 46.60 | 50.40 | 48.71 |
| water vapor..... | 41.60 | 39.20 | 38.96 |
| Dry molecular weight..... | 29.60 | 29.08 | 29.56 |
| Wet molecular weight..... | 24.77 | 24.74 | 25.06 |
| Specific gravity..... | 0.856 | 0.854 | 0.866 |
| Water mass flow.....(LB/HR) | 45191 | 43571 | 43051 |
| FO | 1.106 | 2.152 | 1.111 |

Test No. 10
East Pellet Cooler Stack

**Results of Orsat & Moisture Analyses-----Methods 3 & 4(%v/v)**

| | Run 1 | Run 2 | Run 3 |
|---|---|---|---|
| Date of run | 11-11-93 | 11-11-93 | 11-11-93 |
| **Dry basis (orsat)** | | | |
| carbon dioxide..... | 0.03 | 0.03 | 0.03 |
| oxygen..... | 20.90 | 20.90 | 20.90 |
| nitrogen..... | 79.07 | 79.07 | 79.07 |
| **Wet basis (orsat)** | | | |
| carbon dioxide..... | 0.03 | 0.03 | 0.03 |
| oxygen..... | 20.16 | 20.09 | 20.19 |
| nitrogen..... | 76.27 | 75.99 | 76.38 |
| water vapor..... | 3.54 | 3.89 | 3.40 |
| Dry molecular weight..... | 28.84 | 28.84 | 28.84 |
| Wet molecular weight..... | 28.46 | 28.42 | 28.47 |
| Specific gravity..... | 0.983 | 0.982 | 0.983 |
| Water mass flow.....(LB/HR) | 1221 | 1353 | 1194 |

Test No. 12
Pellet Loadout Stack

**Results of Orsat & Moisture Analyses-----Methods 3 & 4(%v/v)**

| Date of run | Run 1<br>11-11-93 | Run 2<br>11-11-93 | Run 3<br>11-11-93 |
|---|---|---|---|
| **Dry basis (orsat)** | | | |
| carbon dioxide..... | 0.03 | 0.03 | 0.03 |
| oxygen..... | 20.90 | 20.90 | 20.90 |
| nitrogen..... | 79.07 | 79.07 | 79.07 |
| **Wet basis (orsat)** | | | |
| carbon dioxide..... | 0.03 | 0.03 | 0.03 |
| oxygen..... | 20.75 | 20.75 | 20.78 |
| nitrogen..... | 78.49 | 78.51 | 78.60 |
| water vapor..... | 0.74* | 0.70* | 0.60* |
| Dry molecular weight..... | 28.84 | 28.84 | 28.84 |
| Wet molecular weight..... | 28.76 | 28.76 | 28.78 |
| Specific gravity..... | 0.993 | 0.994 | 0.994 |
| Water mass flow.....(LB/HR) | 186 | 128 | 114 |

* Free or condensed water in the gas stream.

Test No. 13
West Pellet Cooler Stack

**Results of Orsat & Moisture Analyses-----Methods 3 & 4(%v/v)**

| | Run 1 | Run 2 | Run 3 |
|---|---|---|---|
| Date of run | 11-11-93 | 11-11-93 | 11-11-93 |
| **Dry basis (orsat)** | | | |
| carbon dioxide..... | 0.03 | 0.03 | 0.03 |
| oxygen..... | 20.90 | 20.90 | 20.90 |
| nitrogen..... | 79.07 | 79.07 | 79.07 |
| **Wet basis (orsat)** | | | |
| carbon dioxide..... | 0.03 | 0.03 | 0.03 |
| oxygen..... | 20.29 | 20.13 | 20.35 |
| nitrogen..... | 76.76 | 76.14 | 76.97 |
| water vapor..... | 2.92 | 3.70 | 2.65 |
| Dry molecular weight..... | 28.84 | 28.84 | 28.84 |
| Wet molecular weight..... | 28.52 | 28.44 | 28.55 |
| Specific gravity..... | 0.985 | 0.982 | 0.986 |
| Water mass flow.....(LB/HR) | 1089 | 1378 | 1002 |

Test No. 1
C - Pulp Dryer Stack

**Results of Particulate Loading Determinations-------Method 5**

| | Run 1 | Run 2 | Run 3 |
|---|---|---|---|
| Date of run | 11-09-93 | 11-09-93 | 11-09-93 |
| Time run start/end.....(HRS) | 1030/1235 | 1315/1517 | 1535/1738 |
| Static pressure.....(IN.WC) | -1.02 | -1.02 | -1.02 |
| Cross sectional area (SQ.FT) | 12.57 | 12.57 | 12.57 |
| Pitot tube coefficient..... | .840 | .840 | .840 |
| Water in sample gas | | | |
| condenser.....(ML) | 0.0 | 0.0 | 0.0 |
| impingers.....(GRAMS) | 578.0 | 468.0 | 631.0 |
| desiccant.....(GRAMS) | 11.0 | 10.0 | 10.0 |
| total.....(GRAMS) | 589.0 | 478.0 | 641.0 |
| Total particulate material.. | | | |
| .....collected(grams) | 0.2156 | 0.2231 | 0.2571 |
| Gas meter coefficient..... | 0.9975 | 0.9975 | 0.9975 |
| Barometric pressure..(IN.HG) | 29.51 | 29.51 | 29.51 |
| Avg. orif.pres.drop..(IN.WC) | 0.70 | 0.57 | 0.61 |
| Avg. gas meter temp..(DEF-F) | 79.5 | 78.0 | 82.1 |
| Volume through gas meter.... | | | |
| at meter conditions...(CF) | 56.90 | 51.59 | 53.27 |
| standard conditions.(DSCF) | 54.86 | 49.86 | 51.10 |
| Total sampling time....(MIN) | 120.00 | 120.00 | 120.00 |
| Nozzle diameter.....(IN) | .198 | .198 | .198 |
| Avg.stack gas temp ..(DEG-F) | 216 | 215 | 216 |
| Volumetric flow rate..... | | | |
| actual.....(ACFM) | 48759 | 47866 | 48553 |
| dry standard.....(DSCFM) | 24867 | 25356 | 23446 |
| Isokinetic variation.....(%) | 108.1 | 96.4 | 106.8 |
| Particulate concentration... | | | |
| actual.....(GR/ACF) | 0.03091 | 0.03656 | 0.03747 |
| dry standard.....(GR/DSCF) | 0.06064 | 0.06904 | 0.07763 |
| Particle mass rate...(LB/HR) | 12.925 | 15.004 | 15.601 |

Test No. 10
East Pellet Cooler Stack

**Results of Particulate Loading Determinations-------Method 5**

| | Run 1 | Run 2 | Run 3 |
|---|---|---|---|
| Date of run | 11-11-93 | 11-11-93 | 11-11-93 |
| Time run start/end.....(HRS) | 1415/1517 | 1545/1648 | 1705/1808 |
| Static pressure.....(IN.WC) | -0.46 | -0.46 | -0.46 |
| Cross sectional area (SQ.FT) | 2.89 | 2.89 | 2.89 |
| Pitot tube coefficient..... | .840 | .840 | .840 |
| Water in sample gas | | | |
| condenser.....(ML) | 0.0 | 0.0 | 0.0 |
| impingers.....(GRAMS) | 25.0 | 27.0 | 23.0 |
| desiccant.....(GRAMS) | 12.0 | 14.0 | 13.0 |
| total.....(GRAMS) | 37.0 | 41.0 | 36.0 |
| Total particulate material.. | | | |
| .....collected(grams) | 0.1021 | 0.1142 | 0.1012 |
| Gas meter coefficient..... | 0.9965 | 0.9965 | 0.9965 |
| Barometric pressure..(IN.HG) | 29.26 | 29.26 | 29.26 |
| Avg. orif.pres.drop..(IN.WC) | 2.23 | 2.28 | 2.32 |
| Avg. gas meter temp..(DEF-F) | 65.5 | 71.5 | 71.8 |
| Volume through gas meter.... | | | |
| at meter conditions...(CF) | 48.24 | 49.08 | 49.51 |
| standard conditions.(DSCF) | 47.48 | 47.77 | 48.16 |
| Total sampling time....(MIN) | 60.00 | 60.00 | 60.00 |
| Nozzle diameter.....(IN) | .188 | .188 | .188 |
| Avg.stack gas temp ..(DEG-F) | 134 | 134 | 128 |
| Volumetric flow rate..... | | | |
| actual.....(ACFM) | 14158 | 14278 | 14238 |
| dry standard.....(DSCFM) | 11849 | 11920 | 12073 |
| Isokinetic variation.....(%) | 100.0 | 100.0 | 99.6 |
| Particulate concentration... | | | |
| actual.....(GR/ACF) | 0.02776 | 0.03078 | 0.02748 |
| dry standard.....(GR/DSCF) | 0.03318 | 0.03689 | 0.03242 |
| Particle mass rate...(LB/HR) | 3.370 | 3.769 | 3.355 |

Test No. 12
Pellet Loadout Stack

**Results of Particulate Loading Determinations-------Method 5**

| | Run 1 | Run 2 | Run 3 |
|---|---|---|---|
| Date of run | 11-11-93 | 11-11-93 | 11-11-93 |
| Time run start/end.....(HRS) | 1445/1549 | 1620/1721 | 1755/1856 |
| Static pressure.....(IN.WC) | -0.06 | -0.06 | -0.06 |
| Cross sectional area (SQ.FT) | 3.62 | 3.62 | 3.62 |
| Pitot tube coefficient..... | .840 | .840 | .840 |
| Water in sample gas | | | |
| condenser.....(ML) | 0.0 | 0.0 | 0.0 |
| impingers.....(GRAMS) | 0.0 | 0.0 | 0.0 |
| desiccant.....(GRAMS) | 13.0 | 9.0 | 8.0 |
| total.....(GRAMS) | 13.0 | 9.0 | 8.0 |
| Total particulate material.. | | | |
| .....collected(grams) | 0.0087 | 0.0046 | 0.0028 |
| Gas meter coefficient..... | 0.9975 | 0.9975 | 0.9975 |
| Barometric pressure..(IN.HG) | 29.30 | 29.30 | 29.30 |
| Avg. orif.pres.drop..(IN.WC) | 1.29 | 1.35 | 1.40 |
| Avg. gas meter temp..(DEF-F) | 71.6 | 86.2 | 89.1 |
| Volume through gas meter.... | | | |
| at meter conditions...(CF) | 41.19 | 42.71 | 43.66 |
| standard conditions.(DSCF) | 40.08 | 40.45 | 41.14 |
| Total sampling time....(MIN) | 64.00 | 64.00 | 64.00 |
| Nozzle diameter.....(IN) | .310 | .310 | .310 |
| Avg.stack gas temp ..(DEG-F) | 37 | 35 | 31 |
| Volumetric flow rate..... | | | |
| actual.....(ACFM) | 4204 | 4211 | 4240 |
| dry standard.....(DSCFM) | 4344 | 4364 | 4436 |
| Isokinetic variation.....(%) | 99.5 | 100.0 | 100.0 |
| Particulate concentration... | | | |
| actual.....(GR/ACF) | 0.00346 | 0.00182 | 0.00110 |
| dry standard.....(GR/DSCF) | 0.00335 | 0.00175 | 0.00105 |
| Particle mass rate...(LB/HR) | 0.125 | 0.066 | 0.040 |

Test No. 13
West Pellet Cooler Stack

**Results of Particulate Loading Determinations-------Method 5**

| | Run 1 | Run 2 | Run 3 |
|---|---|---|---|
| Date of run | 11-11-93 | 11-11-93 | 11-11-93 |
| Time run start/end.....(HRS) | 935/1038 | 1103/1205 | 1245/1348 |
| Static pressure.....(IN.WC) | -0.50 | -0.50 | -0.50 |
| Cross sectional area (SQ.FT) | 2.89 | 2.89 | 2.89 |
| Pitot tube coefficient..... | .840 | .840 | .840 |
| Water in sample gas | | | |
| condenser.....(ML) | 0.0 | 0.0 | 0.0 |
| impingers.....(GRAMS) | 17.0 | 27.0 | 22.0 |
| desiccant.....(GRAMS) | 16.0 | 15.0 | 8.0 |
| total.....(GRAMS) | 33.0 | 42.0 | 30.0 |
| Total particulate material.. | | | |
| .....collected(grams) | 0.3116 | 0.3111 | 0.3909 |
| Gas meter coefficient..... | 0.9965 | 0.9965 | 0.9965 |
| Barometric pressure..(IN.HG) | 29.26 | 29.26 | 29.26 |
| Avg. orif.pres.drop..(IN.WC) | 2.63 | 2.63 | 2.66 |
| Avg. gas meter temp..(DEF-F) | 61.4 | 64.5 | 63.9 |
| Volume through gas meter.... | | | |
| at meter conditions...(CF) | 52.11 | 52.18 | 52.58 |
| standard conditions.(DSCF) | 51.74 | 51.51 | 51.97 |
| Total sampling time....(MIN) | 60.00 | 60.00 | 60.00 |
| Nozzle diameter.....(IN) | .188 | .188 | .188 |
| Avg.stack gas temp ..(DEG-F) | 124 | 138 | 135 |
| Volumetric flow rate..... | | | |
| actual.....(ACFM) | 15063 | 15396 | 15555 |
| dry standard.....(DSCFM) | 12908 | 12779 | 13123 |
| Isokinetic variation.....(%) | 100.1 | 100.6 | 98.8 |
| Particulate concentration... | | | |
| actual.....(GR/ACF) | 0.07960 | 0.07732 | 0.09788 |
| dry standard.....(GR/DSCF) | 0.09293 | 0.09319 | 0.11606 |
| Particle mass rate...(LB/HR) | 10.281 | 10.207 | 13.055 |

Test No. 1
C - Pulp Dryer Stack

**Results of Sulfur Dioxide Determinations----------Method 6**

| | Run 1 | Run 2 | Run 3 |
|---|---|---|---|
| Date of run | 11-09-93 | 11-09-93 | 11-09-93 |
| Time run start/end.....(HRS) | 1030-1235 | 1315-1517 | 1535-1738 |
| Barometric pressure..(IN.HG) | 29.51 | 29.51 | 29.51 |
| Meter temperature....(DEG-F) | 79.50 | 78.00 | 82.10 |
| Meter correction coefficient | 0.9975 | 0.9975 | 0.9975 |
| Volume through gas meter.... | | | |
| at meter conditions...(CF) | 56.900 | 51.590 | 53.270 |
| standard conditions..(SCF) | 54.860 | 49.863 | 51.103 |
| Total sampling time....(MIN) | 120.0 | 120.0 | 120.0 |
| Moisture content.....(%V/V) | 33.61 | 31.13 | 37.16 |
| Oxygen content....(%V/V DRY) | 15.20 | 14.70 | 14.70 |
| Milliequivalents of SO4 in.. | | | |
| gas sample..... | 2.5000 | 1.4300 | 3.0200 |
| <u>Sulfur dioxide concentration</u> | | | |
| (GR/DSCF)..... | 0.0225 | 0.0142 | 0.0292 |
| (MG/DSCM)..... | 52 | 32 | 67 |
| (PPM-DRY)..... | 19 | 12 | 25 |
| (PPM-WET)..... | 13 | 8 | 16 |
| SO2 Emission rate....(LB/HR) | 4.80 | 3.08 | 5.87 |

Test No. 5
B - Pulp Dryer Stack

**Results of Oxides of Nitrogen (NOx) Determinations---------Method 7**

| | Run 2A | Run 2B | Run 2C | Run 2D |
|---|---|---|---|---|
| Date of run..... | 11-10-93 | 11-10-93 | 11-10-93 | 11-10-93 |
| Time of run.....(HRS) | 1130 | 1205 | 1235 | 1310 |
| Flask number..... | 29 | 30 | 31 | 32 |
| Volume of flask.....(ML) | 2068 | 2071 | 2009 | 2092 |
| **Data: time of sampling** | | | | |
| flask temperature..(DEG-F) | 55.00 | 52.00 | 58.00 | 56.00 |
| bar. press.....(IN.HG) | 29.55 | 29.55 | 29.55 | 29.55 |
| flask vacuum.....(IN.HG) | 27.45 | 27.50 | 27.45 | 27.50 |
| flask abs. press...(IN.HG) | 2.10 | 2.05 | 2.10 | 2.05 |
| **Data: Time of Flask Opening** | | | | |
| flask temperature..(DEG-F) | 72.00 | 72.00 | 72.00 | 72.00 |
| lab. bar. press....(IN.HG) | 29.16 | 29.16 | 29.16 | 29.16 |
| flask static press.(IN.HG) | 0.50 | -0.30 | -2.30 | -0.30 |
| flask abs. press...(IN.HG) | 29.66 | 28.86 | 26.86 | 28.86 |
| Volume gas sampled....(DSML) | 1862 | 1813 | 1625 | 1833 |
| Moisture content.....(%V/V) | 21.88 | 21.88 | 21.88 | 21.88 |
| Oxygen content....(%V/V,DRY) | 17.50 | 17.50 | 17.50 | 17.50 |
| Nitrate in gas sample...(JG) | 319.0 | 301.0 | 300.0 | 310.0 |
| NO2 in gas sample.....(JG) | 236.7 | 223.3 | 222.6 | 230.0 |
| <u>NOx Concentration</u> | | | | |
| (GR/DSCF)..... | 0.0555 | 0.0538 | 0.0599 | 0.0548 |
| (MG/DSCM)..... | 127 | 123 | 137 | 125 |
| (PPM-DRY)..... | 66 | 64 | 72 | 66 |
| (PPM-WET)..... | 52 | 50 | 56 | 51 |
| NOX Emission rate....(LB/HR) | 21.27 | 20.61 | 22.92 | 21.00 |
| NOx emission factor..... .....(LB/MMBTU)* | 0.477 | 0.462 | 0.514 | 0.471 |

* F = 9780 DSCF/MMBTU

Test No. 5
B - Pulp Dryer Stack

**Results of Oxides of Nitrogen (NOx) Determinations---------Method 7**

| | Run 3A | Run 3B | Run 3C | Run 3D |
|---|---|---|---|---|
| Date of run..... | 11-10-93 | 11-10-93 | 11-10-93 | 11-10-93 |
| Time of run.....(HRS) | 1400 | 1430 | 1455 | 1534 |
| Flask number..... | 33 | 34 | 35 | 36 |
| Volume of flask.....(ML) | 2088 | 2071 | 2071 | 2127 |
| **Data: time of sampling** | | | | |
| flask temperature..(DEG-F) | 50.00 | 48.00 | 45.00 | 42.00 |
| bar. press.....(IN.HG) | 29.55 | 29.55 | 29.55 | 29.55 |
| flask vacuum.....(IN.HG) | 27.50 | 27.50 | 27.45 | 27.55 |
| flask abs. press...(IN.HG) | 2.05 | 2.05 | 2.10 | 2.00 |
| **Data: Time of Flask Opening** | | | | |
| flask temperature..(DEG-F) | 72.00 | 72.00 | 72.00 | 72.00 |
| lab. bar. press....(IN.HG) | 29.16 | 29.16 | 29.16 | 29.16 |
| flask static press.(IN.HG) | 0.00 | -0.70 | -2.00 | -2.10 |
| flask abs. press...(IN.HG) | 29.16 | 28.46 | 27.16 | 27.06 |
| Volume gas sampled....(DSML) | 1848 | 1785 | 1692 | 1738 |
| Moisture content.....(%V/V) | 21.93 | 21.93 | 21.93 | 21.93 |
| Oxygen content....(%V/V,DRY) | 17.20 | 17.20 | 17.20 | 17.20 |
| Nitrate in gas sample...(JG) | 297.0 | 305.0 | 286.0 | 318.0 |
| NO2 in gas sample.....(JG) | 220.4 | 226.3 | 212.2 | 235.9 |
| **NOx Concentration** | | | | |
| (GR/DSCF)..... | 0.0521 | 0.0554 | 0.0548 | 0.0593 |
| (MG/DSCM)..... | 119 | 127 | 125 | 136 |
| (PPM-DRY)..... | 62 | 66 | 66 | 71 |
| (PPM-WET)..... | 49 | 52 | 51 | 55 |
| NOX Emission rate....(LB/HR) | 19.51 | 20.75 | 20.52 | 22.22 |
| NOx emission factor..... .....(LB/MMBTU)* | 0.411 | 0.437 | 0.432 | 0.468 |

* F = 9780 DSCF/MMBTU

Test No. 1
C - Pulp Dryer Stack

**Results of Oxides of Nitrogen (NOx) Determinations---------Method 7**

| | Run 1A | Run 1B | Run 1C | Run 1D |
|---|---|---|---|---|
| Date of run..... | 11-09-93 | 11-09-93 | 11-09-93 | 11-09-93 |
| Time of run.....(HRS) | 1030 | 1055 | 1125 | 1155 |
| Flask number..... | 37 | 38 | 39 | 40 |
| Volume of flask.....(ML) | 2054 | 2056 | 2062 | 2093 |
| **Data: time of sampling** | | | | |
| flask temperature..(DEG-F) | 60.00 | 59.00 | 56.00 | 55.00 |
| bar. press.....(IN.HG) | 29.51 | 29.51 | 29.51 | 29.51 |
| flask vacuum.....(IN.HG) | 27.80 | 27.70 | 27.80 | 27.85 |
| flask abs. press...(IN.HG) | 1.71 | 1.81 | 1.71 | 1.66 |
| **Data: Time of Flask Opening** | | | | |
| flask temperature..(DEG-F) | 72.00 | 72.00 | 72.00 | 72.00 |
| lab. bar. press....(IN.HG) | 29.16 | 29.16 | 29.16 | 29.16 |
| flask static press.(IN.HG) | 0.00 | 1.10 | 0.00 | -1.40 |
| flask abs. press...(IN.HG) | 29.16 | 30.26 | 29.16 | 27.76 |
| Volume gas sampled....(DSML) | 1844 | 1913 | 1850 | 1786 |
| Moisture content.....(%V/V) | 33.61 | 33.61 | 33.61 | 33.61 |
| Oxygen content....(%V/V,DRY) | 15.20 | 15.20 | 15.20 | 15.20 |
| Nitrate in gas sample...(JG) | 438.0 | 465.0 | 466.0 | 470.0 |
| NO2 in gas sample.....(JG) | 325.0 | 345.0 | 345.8 | 348.7 |
| <u>NOx Concentration</u> | | | | |
| (GR/DSCF)..... | 0.0770 | 0.0788 | 0.0817 | 0.0853 |
| (MG/DSCM)..... | 176 | 180 | 187 | 195 |
| (PPM-DRY)..... | 92 | 94 | 98 | 102 |
| (PPM-WET)..... | 61 | 63 | 65 | 68 |
| NOX Emission rate....(LB/HR) | 16.42 | 16.80 | 17.40 | 18.19 |
| NOx emission factor..... .....(LB/MMBTU)* | 0.395 | 0.404 | 0.418 | 0.437 |

* F = 9780 DSCF/MMBTU

Test No. 1
C - Pulp Dryer Stack

**Results of Oxides of Nitrogen (NOx) Determinations---------Method 7**

| | Run 2A | Run 2B | Run 2C | Run 2D |
|---|---|---|---|---|
| Date of run..... | 11-09-93 | 11-09-93 | 11-09-93 | 11-09-93 |
| Time of run.....(HRS) | 1320 | 1345 | 1415 | 1445 |
| Flask number..... | 41 | 42 | 79 | 80 |
| Volume of flask.....(ML) | 2076 | 2094 | 2085 | 2105 |
| **Data: time of sampling** | | | | |
| flask temperature..(DEG-F) | 46.00 | 44.00 | 68.00 | 68.00 |
| bar. press.....(IN.HG) | 29.51 | 29.51 | 29.51 | 29.51 |
| flask vacuum.....(IN.HG) | 27.80 | 27.80 | 27.80 | 27.80 |
| flask abs. press...(IN.HG) | 1.71 | 1.71 | 1.71 | 1.71 |
| **Data: Time of Flask Opening** | | | | |
| flask temperature..(DEG-F) | 72.00 | 72.00 | 72.00 | 72.00 |
| lab. bar. press....(IN.HG) | 29.16 | 29.16 | 29.16 | 29.16 |
| flask static press.(IN.HG) | -1.30 | -1.50 | 0.30 | 0.90 |
| flask abs. press...(IN.HG) | 27.86 | 27.66 | 29.46 | 30.06 |
| Volume gas sampled....(DSML) | 1772 | 1774 | 1895 | 1954 |
| Moisture content.....(%V/V) | 31.13 | 31.13 | 31.13 | 31.13 |
| Oxygen content....(%V/V,DRY) | 14.70 | 14.70 | 14.70 | 14.70 |
| Nitrate in gas sample...(JG) | 482.0 | 487.0 | 440.0 | 447.0 |
| NO2 in gas sample.....(JG) | 357.6 | 361.3 | 326.5 | 331.7 |
| **NOx Concentration** | | | | |
| (GR/DSCF)..... | 0.0882 | 0.0890 | 0.0753 | 0.0742 |
| (MG/DSCM)..... | 202 | 204 | 172 | 170 |
| (PPM-DRY)..... | 106 | 107 | 90 | 89 |
| (PPM-WET)..... | 73 | 73 | 62 | 61 |
| NOX Emission rate....(LB/HR) | 19.16 | 19.35 | 16.37 | 16.12 |
| NOx emission factor..... .....(LB/MMBTU)* | 0.415 | 0.419 | 0.355 | 0.349 |

* F = 9780 DSCF/MMBTU

Test No. 1
C - Pulp Dryer Stack

**Results of Oxides of Nitrogen (NOx) Determinations---------Method 7**

| | Run 3A | Run 3B | Run 3C | Run 3D |
|---|---|---|---|---|
| Date of run..... | 11-09-93 | 11-09-93 | 11-09-93 | 11-09-93 |
| Time of run.....(HRS) | 1540 | 1625 | 1650 | 1720 |
| Flask number..... | 81 | 82 | 83 | 84 |
| Volume of flask.....(ML) | 2093 | 2090 | 2060 | 2089 |
| **Data: time of sampling** | | | | |
| flask temperature..(DEG-F) | 79.00 | 76.00 | 75.00 | 70.00 |
| bar. press.....(IN.HG) | 29.51 | 29.51 | 29.51 | 29.51 |
| flask vacuum.....(IN.HG) | 27.75 | 27.80 | 27.80 | 27.80 |
| flask abs. press...(IN.HG) | 1.76 | 1.71 | 1.71 | 1.71 |
| **Data: Time of Flask Opening** | | | | |
| flask temperature..(DEG-F) | 72.00 | 72.00 | 72.00 | 72.00 |
| lab. bar. press....(IN.HG) | 29.16 | 29.16 | 29.16 | 29.16 |
| flask static press.(IN.HG) | 0.80 | -1.10 | -1.60 | 1.80 |
| flask abs. press...(IN.HG) | 29.96 | 28.06 | 27.56 | 30.96 |
| Volume gas sampled....(DSML) | 1935 | 1805 | 1745 | 2001 |
| Moisture content.....(%V/V) | 37.16 | 37.16 | 37.16 | 37.16 |
| Oxygen content....(%V/V,DRY) | 14.70 | 14.70 | 14.70 | 14.70 |
| Nitrate in gas sample...(JG) | 401.0 | 445.0 | 454.0 | 423.0 |
| NO2 in gas sample.....(JG) | 297.5 | 330.2 | 336.9 | 313.9 |
| <u>NOx Concentration</u> | | | | |
| (GR/DSCF)..... | 0.0672 | 0.0799 | 0.0844 | 0.0685 |
| (MG/DSCM)..... | 154 | 183 | 193 | 157 |
| (PPM-DRY)..... | 80 | 96 | 101 | 82 |
| (PPM-WET)..... | 51 | 60 | 63 | 52 |
| NOX Emission rate....(LB/HR) | 13.50 | 16.06 | 16.95 | 13.77 |
| NOx emission factor..... .....(LB/MMBTU)* | 0.316 | 0.376 | 0.397 | 0.323 |

* F = 9780 DSCF/MMBTU

Test No. 1
C - Pulp Dryer Stack

**Results of CO Determinations ----------Method 10**

| | Run 1 | Run 2 | Run 3 |
|---|---|---|---|
| Date of run | 11-09-93 | 11-09-93 | 11-09-93 |
| Time run start/end.....(HRS) | 1030/1235 | 1315/1517 | 1535/1738 |
| Total sampling time....(MIN) | 120.0 | 120.0 | 120.0 |
| Moisture content.....(%V/V) | 33.61 | 31.13 | 37.16 |
| O2 Concentration.....(%V/V) | 15.20 | 14.70 | 14.70 |
| Volumetric flow rate (DSCFM) | 24867 | 25356 | 23446 |
| CO concentration..... | | | |
| (GR/DSCF)..... | 0.1221 | 0.1323 | 0.1476 |
| (MG/DSCM)..... | 279.60 | 302.90 | 337.85 |
| (PPM-WET)..... | 159.34 | 179.06 | 182.24 |
| (PPM-DRY)..... | 240.00 | 260.00 | 290.00 |
| (PPM-DRY @ 7% O2)..... | 579.31 | 577.78 | 644.44 |
| CO emission rate.....(LB/HR) | 26.029 | 28.752 | 29.654 |

CO = Carbon monoxide

A trailing '<' symbol indicates that the true value is less than or equal to the reported value

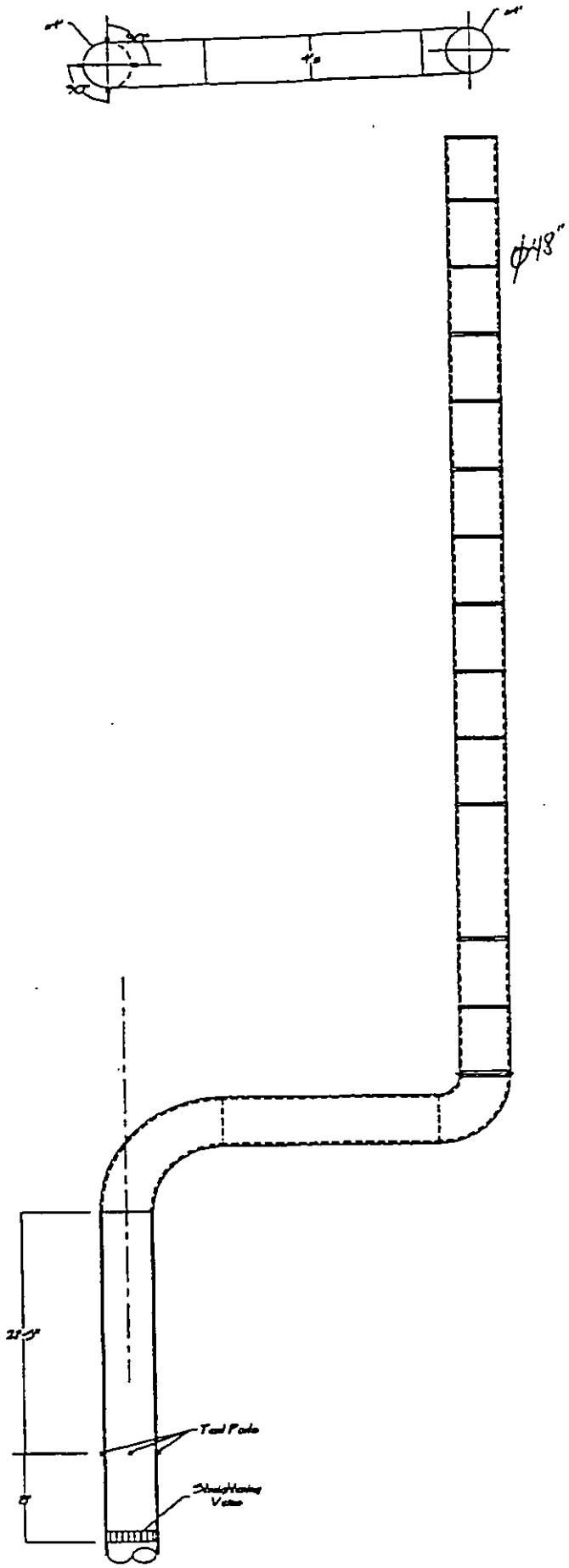


'K' Pulp Diter Stack

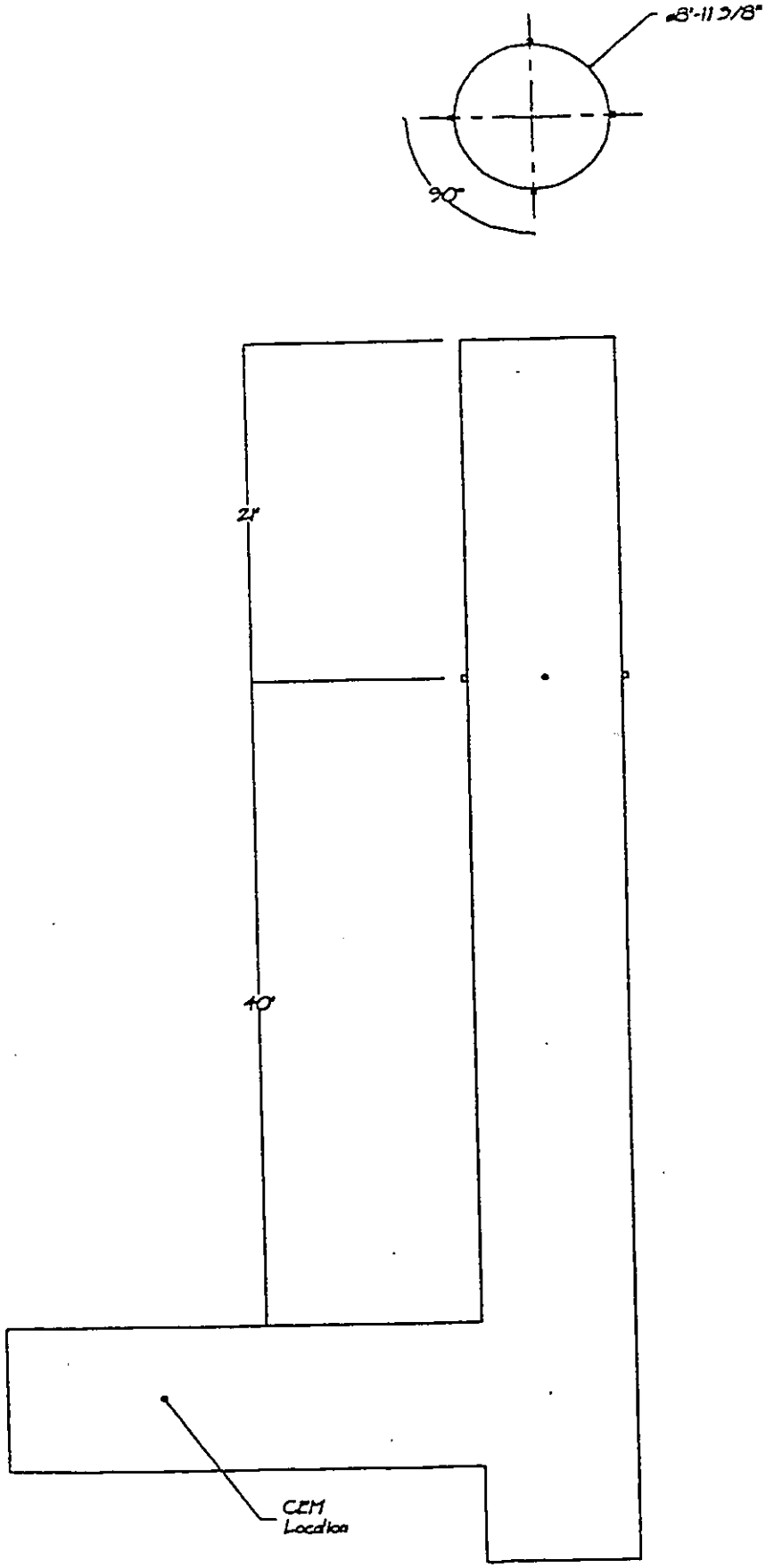


Boilerhouse Stack(s)
2 - Typical

Interpoll Laboratories
(612) 786-6020

# EPA Method 5 Data Reporting Sheet
## Impinger Catch/Minnesota Protocol

Job: ACS
Team Leader: SLB
Date Submitted: 11-12-93
Test No.: 5
Date of Analysis: 11-24-93

Source: B Pulp Dryer
Test Site: Stack
Date of Test: 11-10-93
No. of Runs Completed: 3
Technician: C. Helgeson

| | | |
|---|---|---|
| 0 | Test ____ Run 0<br>Field Blank<br>Log Number ____<br>Comments ____ | Dish No. ____<br>Dish Tare Wt. ____ g<br>Dish+Sample Wt. ____ g<br>Sample Wt. ____ g |
| 1 | Test 5 Run 1<br>Log Number 1636-91<br>Comments ____ | Dish No. 50<br>Dish Tare Wt. 45.4661 g<br>Dish+Sample Wt. 45.4838 g<br>Sample Wt. 0.0177 g |
| 2 | Test 5 Run 2<br>Log Number -93<br>Comments ____ | Dish No. 51<br>Dish Tare Wt. 48.8511 g<br>Dish+Sample Wt. 48.8607 g<br>Sample Wt. 0.0096 g |
| 3 | Test 5 Run 3<br>Log Number -95<br>Comments ____ | Dish No. 61<br>Dish Tare Wt. 44.5905 g<br>Dish+Sample Wt. 44.5973 g<br>Sample Wt. 0.0068 g |
| 4 | Test ____ Run ____<br>Log Number ____<br>Comments ____ | Dish No. ____<br>Dish Tare Wt. ____ g<br>Dish+Sample Wt. ____ g<br>Sample Wt. ____ g |
| 5 | Test ____ Run ____<br>Log Number ____<br>Comments ____ | Dish No. ____<br>Dish Tare Wt. ____ g<br>Dish+Sample Wt. ____ g<br>Sample Wt. ____ g |

Blank Solvent Wt. 0.0001g

*Results:*

| Field Blk. | Run 1 | Run 2 | Run 3 | Run 4 | Run 5 |
|---|---|---|---|---|---|
| | 0.0176 | 0.0095 | 0.0067 | D-14 | |

LSC-03

Interpoll Laboratories
(612) 786-6020

# EPA Method 5 Data Reporting Sheet
## Probe/Cyclone Wash

Job ACS
Team Leader SLB
Date Submitted 11-12-93
Test No. 5
Date of Analysis 11-23-93
Transport Leakage ☐ None ☐ _____ ml

Source B Pulp Dryer
Test Site Stack
Date of Test 11-10-93
No. of Runs Completed 3
Technician C. Hellson
Solvent Acetone

| | | |
|---|---|---|
| 0 | Test ____ Run 0<br>Field Blank<br>Log Number ____<br>Vol. of Solvent ____ ml<br>*Solvent Residue 4.0 ug/ml | Dish No. ____<br>Dish Tare Wt. ____ g<br>Dish+Sample Wt. ____ g<br>Sample Wt. ____ g |
| 1 | Test 5 Run 1<br>Vol. of Solvent 85 ml<br>Log Number 636-88P<br>Comments ____ | Dish No. 2<br>Dish Tare Wt. 46.2283 g<br>Dish+Sample Wt. 46.2533 g<br>Sample Wt. 0.0250 g |
| 2 | Test 5 Run 2<br>Vol. of Solvent 90 ml<br>Log Number 89P<br>Comments ____ | Dish No. 3A<br>Dish Tare Wt. 57.8074 g<br>Dish+Sample Wt. 57.8493 g<br>Sample Wt. 0.0419 g |
| 3 | Test 5 Run 3<br>Vol. of Solvent 105 ml<br>Log Number -90 P<br>Comments ____ | Dish No. 3<br>Dish Tare Wt. 52.1207 g<br>Dish+Sample Wt. 52.1372 g<br>Sample Wt. 0.0165 g |
| 4 | Test ____ Run ____<br>Vol. of Solvent ____ ml<br>Log Number ____<br>Comments ____ | Dish No. ____<br>Dish Tare Wt. ____ g<br>Dish+Sample Wt. ____ g<br>Sample Wt. ____ g |
| 5 | Test ____ Run ____<br>Vol. of Solvent ____ ml<br>Log Number ____<br>Comments ____ | Dish No. ____<br>Dish Tare Wt. ____ g<br>Dish+Sample Wt. ____ g<br>Sample Wt. ____ g |

*Solvent Residue ___ ug/ml=[(Sample Wt. ____ g)($10^6$)]/Vol. of Sol. ____ ml
EPA-M5 Acetone Residue Blank Spec. ≤7.8 ug/ml

*Results:*

| Field Blk. | Run 1 | Run 2 | Run 3 | Run 4 | Run 5 |
|---|---|---|---|---|---|
| | 0.0247 | 0.0415 | 0.0161 | D-15 | |

LSC-01YR

Interpoll Laboratories
(612) 786-6020

# EPA Method 5 Data Reporting Sheet
## Filter Gravimetrics

Job ACS
Team Leader SLB
Date Submitted 11-12-93
Test No. 5
Date of Analysis 11-22-93

Source B-Pulp Dryer
Test Site Stack
Date of Test 11-10-93
No. of Runs Completed 3
Technician C. Helgeson

| | | |
|---|---|---|
| 0 | Test ____ Run 0<br>Field Blank<br>Log Number ____<br>Comments ____ | Filter No. ____<br>Filter Type ____<br>Filter Tare Wt. ____ g<br>Filter+Sample Wt. ____ g<br>Sample Wt. ____ g |
| 1 | Test 5 Run 1<br>Log Number 1636-88F<br>Comments ____ | Filter No. 6012<br>Filter Type 4"6F<br>Filter Tare Wt. .8620 g<br>Filter+Sample Wt. 1.0162 g<br>Sample Wt. 0.1542 g |
| 2 | Test 5 Run 2<br>Log Number ~89F<br>Comments ____ | Filter No. 6013<br>Filter Type 4"6F<br>Filter Tare Wt. .8546 g<br>Filter+Sample Wt. 1.0379 g<br>Sample Wt. 0.1833 g |
| 3 | Test 5 Run 3<br>Log Number ~90F<br>Comments ____ | Filter No. 5997<br>Filter Type 4"6F<br>Filter Tare Wt. .8615 g<br>Filter+Sample Wt. 1.0485 g<br>Sample Wt. 0.1870 g |
| 4 | Test ____ Run ____<br>Log Number ____<br>Comments ____ | Filter No. ____<br>Filter Type ____<br>Filter Tare Wt. ____ g<br>Filter+Sample Wt. ____ g<br>Sample Wt. ____ g |
| 5 | Test ____ Run ____<br>Log Number ____<br>Comments ____ | Filter No. ____<br>Filter Type ____<br>Filter Tare Wt. ____ g<br>Filter+Sample Wt. ____ g<br>Sample Wt. ____ g |

*Results:*

| Field Blk. | Run 1 | Run 2 | Run 3 | Run 4 | Run 5 |
|---|---|---|---|---|---|
| | 0.1542 | 0.1833 | 0.1870 | | |

| Field Blk. | Run 1 | Run 2 | Run 3 | Run 4 | Run 5 |
|---|---|---|---|---|---|
| | 0.1965 | 0.2343 | 0.2098 | | |

LSC-02PR

Interpoll Laboratories
(612) 786-6020

# EPA Method 5 Data Reporting Sheet
## Impinger Catch/Minnesota Protocol

Job ACS
Team Leader SCB
Date Submitted 11-22-93
Test No. 1
Date of Analysis 11-22-93

Source C Pulp Dryer
Test Site Stack
Date of Test 11-9-93
No. of Runs Completed 3
Technician C. Helgeson

| | | |
|---|---|---|
| 0 | Test 1 Run 0<br>Field Blank<br>Log Number 1636-77<br>Comments | Dish No. 152<br>Dish Tare Wt. 49.8054 g<br>Dish+Sample Wt. 49.80 g<br>Sample Wt. 0.0001 g |
| 1 | Test 1 Run 1<br>Log Number -79<br>Comments | Dish No. 158<br>Dish Tare Wt. 50.2229 g<br>Dish+Sample Wt. 50.2473 g<br>Sample Wt. 0.0244 g |
| 2 | Test 1 Run 2<br>Log Number -81<br>Comments | Dish No. 161<br>Dish Tare Wt. 49.1345 g<br>Dish+Sample Wt. 49.1562 g<br>Sample Wt. 0.0217 g |
| 3 | Test 1 Run 3<br>Log Number -83<br>Comments | Dish No. 175<br>Dish Tare Wt. 53.0298 g<br>Dish+Sample Wt. 53.0491 g<br>Sample Wt. 0.0193 g |
| 4 | Test Run<br>Log Number<br>Comments | Dish No.<br>Dish Tare Wt. g<br>Dish+Sample Wt. g<br>Sample Wt. g |
| 5 | Test Run<br>Log Number<br>Comments | Dish No.<br>Dish Tare Wt. g<br>Dish+Sample Wt. g<br>Sample Wt. g |

Blank Solvent Wt. 0.0001 g

*Results:*

| Field Blk. | Run 1 | Run 2 | Run 3 | Run 4 | Run 5 |
|---|---|---|---|---|---|
| | 0.0243 | 0.0216 | 0.0192 | D-17 | |

LSC-03.GF

Interpoll Laboratories
(612) 786-6020

# EPA Method 5 Data Reporting Sheet
## Filter Gravimetrics

Job ACS
Team Leader SLB
Date Submitted 11-12-93
Test No. 1
Date of Analysis 11-19-93

Source C Pulp Dryer
Test Site Stack
Date of Test 11-9-93
No. of Runs Completed 3
Technician C. Helgeson

| | | |
|---|---|---|
| 0 | Test 1 Run 0<br>Field Blank<br>Log Number 1636-73F<br>Comments | Filter No. 5996<br>Filter Type 4"GF<br>Filter Tare Wt. .8744 g<br>Filter+Sample Wt. .8747 g<br>Sample Wt. 0.0003 g |
| 1 | Test 1 Run 1<br>Log Number -74F<br>Comments | Filter No. 5952<br>Filter Type 4"GF<br>Filter Tare Wt. .9246 g<br>Filter+Sample Wt. 1.0944 g<br>Sample Wt. 0.1698 g |
| 2 | Test 1 Run 2<br>Log Number -75F<br>Comments | Filter No. 5972<br>Filter Type 4"GF<br>Filter Tare Wt. .9328 g<br>Filter+Sample Wt. 1.1090 g<br>Sample Wt. 0.1762 g |
| 3 | Test 1 Run 3<br>Log Number -76F<br>Comments | Filter No. 6015<br>Filter Type 4"GF<br>Filter Tare Wt. .8727 g<br>Filter+Sample Wt. 1.0816 g<br>Sample Wt. 0.2089 g |
| 4 | Test ____ Run ____<br>Log Number<br>Comments | Filter No.<br>Filter Type<br>Filter Tare Wt. g<br>Filter+Sample Wt. g<br>Sample Wt. g |
| 5 | Test ____ Run ____<br>Log Number<br>Comments | Filter No.<br>Filter Type<br>Filter Tare Wt. g<br>Filter+Sample Wt. g<br>Sample Wt. g |

*Results:*

| Field Blk. | Run 1 | Run 2 | Run 3 | Run 4 | Run 5 |
|---|---|---|---|---|---|
| | 0.1698 | 0.1762 | 0.2089 | | |

| Field Blk. | Run 1 | Run 2 | Run 3 | Run 4 | Run 5 |
|---|---|---|---|---|---|
| | 0.2156 | 0.2231 | 0.2571 | | |

LSC-02PR

Interpoll Laboratories
(612) 786-6020

# EPA Method 5 Data Reporting Sheet
## Impinger Catch/Minnesota Protocol

Job ACS
Team Leader DB
Date Submitted 11-12-93
Test No. 10
Date of Analysis 11-29-93

Source East Pellet Cooler
Test Site Stack
Date of Test 11-11-93
No. of Runs Completed 3
Technician C. Helgeson

| | | |
|---|---|---|
| 0 | Test 10 Run 0<br>Field Blank<br>Log Number 1636-112 I<br>Comments | Dish No. 1<br>Dish Tare Wt. 51.9699 g<br>Dish+Sample Wt. 51.9700 g<br>Sample Wt. 0.0001 g |
| 1 | Test 10 Run 1<br>Log Number -113 I<br>Comments | Dish No. 6<br>Dish Tare Wt. 48.2706 g<br>Dish+Sample Wt. 48.2735 g<br>Sample Wt. 0.0029 g |
| 2 | Test 10 Run 2<br>Log Number -114 I<br>Comments | Dish No. 7<br>Dish Tare Wt. 50.0142 g<br>Dish+Sample Wt. 50.0158 g<br>Sample Wt. 0.0016 g |
| 3 | Test 10 Run 3<br>Log Number -115 I<br>Comments | Dish No. 12<br>Dish Tare Wt. 48.1484 g<br>Dish+Sample Wt. 48.1501 g<br>Sample Wt. 0.0017 g |
| 4 | Test ____ Run ____<br>Log Number<br>Comments | Dish No.<br>Dish Tare Wt. g<br>Dish+Sample Wt. g<br>Sample Wt. g |
| 5 | Test ____ Run ____<br>Log Number<br>Comments | Dish No.<br>Dish Tare Wt. g<br>Dish+Sample Wt. g<br>Sample Wt. g |

Blank Solvent Wt. 0.0001 g

*Results:*

| Field Blk. | Run 1 | Run 2 | Run 3 | Run 4 | Run 5 |
|---|---|---|---|---|---|
| | 0.0028 | 0.0015 | 0.0016 | | |

D-26

LSC-03.GR

Interpoll Laboratories
(612) 786-6020

# EPA Method 5 Data Reporting Sheet
## Probe/Cyclone Wash

Job ACS
Team Leader DB
Date Submitted 11-12-93
Test No. 10
Date of Analysis 11-24-93
Transport Leakage [X] None [ ] _____ ml

Source East Pellet Cooler
Test Site Stack
Date of Test 11-11-93
No. of Runs Completed 3
Technician C. Helgeson
Solvent Acetone

| | | |
|---|---|---|
| 0 | Test ____ Run 0<br>Field Blank<br>Log Number ____<br>Vol. of Solvent ____ ml<br>*Solvent Residue 4.0 ug/ml | Dish No. ____<br>Dish Tare Wt. ____ g<br>Dish+Sample Wt. ____ g<br>Sample Wt. ____ g |
| 1 | Test 10 Run 1<br>Vol. of Solvent 200 ml<br>Log Number 1636-113P<br>Comments ____ | Dish No. 66<br>Dish Tare Wt. 48.3080 g<br>Dish+Sample Wt. 48.3793 g<br>Sample Wt. 0.0713 g |
| 2 | Test 10 Run 2<br>Vol. of Solvent 175 ml<br>Log Number -114P<br>Comments ____ | Dish No. 67<br>Dish Tare Wt. 44.5345 g<br>Dish+Sample Wt. 44.6005 g<br>Sample Wt. 0.0660 g |
| 3 | Test 10 Run 3<br>Vol. of Solvent 220 ml<br>Log Number -115P<br>Comments ____ | Dish No. 84<br>Dish Tare Wt. 49.0995 g<br>Dish+Sample Wt. 49.1734 g<br>Sample Wt. 0.0739 g |
| 4 | Test ____ Run ____<br>Vol. of Solvent ____ ml<br>Log Number ____<br>Comments ____ | Dish No. ____<br>Dish Tare Wt. ____ g<br>Dish+Sample Wt. ____ g<br>Sample Wt. ____ g |
| 5 | Test ____ Run ____<br>Vol. of Solvent ____ ml<br>Log Number ____<br>Comments ____ | Dish No. ____<br>Dish Tare Wt. ____ g<br>Dish+Sample Wt. ____ g<br>Sample Wt. ____ g |

*Solvent Residue ___ ug/ml = [(Sample Wt. ____ g)(10⁶)]/Vol. of Sol. ____ ml
EPA-M5 Acetone Residue Blank Spec. ≤ 7.8 ug/ml

*Results:*

| Field Blk. | Run 1 | Run 2 | Run 3 | Run 4 | Run 5 |
|---|---|---|---|---|---|
| | 0.0705 | 0.0653 | 0.0730 | D-27 | |

LSC-01YR

Interpoll Laboratories
(612) 786-6020

# EPA Method 5 Data Reporting Sheet
## Filter Gravimetrics

Job: ACS
Team Leader: DB
Date Submitted: 11-12-93
Test No.: 10
Date of Analysis: 11-24-93

Source: Cast Pellet Cooler
Test Site: Stack
Date of Test: 11-11-93
No. of Runs Completed: 3
Technician: C. Helgeson

| | | |
|---|---|---|
| 0 | Test 10 Run 0<br>Field Blank<br>Log Number 1636-112 F<br>Comments | Filter No. 5868<br>Filter Type 4"6F<br>Filter Tare Wt. .9304 g<br>Filter+Sample Wt. .9304 g<br>Sample Wt. 0.0000 g |
| 1 | Test 10 Run 1<br>Log Number -113F<br>Comments | Filter No. 5912<br>Filter Type 4"6F<br>Filter Tare Wt. .9423 g<br>Filter+Sample Wt. .9711 g<br>Sample Wt. 0.0288 g |
| 2 | Test 10 Run 2<br>Log Number -114F<br>Comments | Filter No. 5913<br>Filter Type 4"6F<br>Filter Tare Wt. .9410 g<br>Filter+Sample Wt. .9884 g<br>Sample Wt. 0.0474 g |
| 3 | Test 10 Run 3<br>Log Number -115F<br>Comments | Filter No. 5914<br>Filter Type 4"6F<br>Filter Tare Wt. .9534 g<br>Filter+Sample Wt. .9800 g<br>Sample Wt. 0.0266 g |
| 4 | Test ____ Run ____<br>Log Number<br>Comments | Filter No.<br>Filter Type<br>Filter Tare Wt. g<br>Filter+Sample Wt. g<br>Sample Wt. g |
| 5 | Test ____ Run ____<br>Log Number<br>Comments | Filter No.<br>Filter Type<br>Filter Tare Wt. g<br>Filter+Sample Wt. g<br>Sample Wt. g |

*Results:*

| Field Blk. | Run 1 | Run 2 | Run 3 | Run 4 | Run 5 |
|---|---|---|---|---|---|
| | 0.0288 | 0.0474 | 0.0266 | | |

| Field Blk. | Run 1 | Run 2 | Run 3 | Run 4 | Run 5 |
|---|---|---|---|---|---|
| | 0.1021 | 0.1142 | 0.1012 | | |

LSC-02PR

Interpoll Laboratories
(612) 786-6020

# EPA Method 5 Data Reporting Sheet
## Impinger Catch/Minnesota Protocol

Job ACS
Team Leader DB
Date Submitted 11-12-93
Test No. 13
Date of Analysis 11-29-93

Source West Pellet Cooler
Test Site Stack
Date of Test 11-11-93
No. of Runs Completed 3
Technician C. Helgeson

| | | |
|---|---|---|
| 0 | Test ____ Run 0<br>Field Blank<br>Log Number ____<br>Comments ____ | Dish No. ____<br>Dish Tare Wt. ____ g<br>Dish+Sample Wt. ____ g<br>Sample Wt. ____ g |
| 1 | Test 13 Run 1<br>Log Number 1636- 120 I<br>Comments ____ | Dish No. 31<br>Dish Tare Wt. 45.2710 g<br>Dish+Sample Wt. 45.2725 g<br>Sample Wt. 0.0015 g |
| 2 | Test 13 Run 2<br>Log Number -121 I<br>Comments ____ | Dish No. 35<br>Dish Tare Wt. 51.0912 g<br>Dish+Sample Wt. 51.0947 g<br>Sample Wt. 0.0035 g |
| 3 | Test 13 Run 3<br>Log Number -122 I<br>Comments ____ | Dish No. 36<br>Dish Tare Wt. 43.5635 g<br>Dish+Sample Wt. 43.5657 g<br>Sample Wt. 0.0022 g |
| 4 | Test ____ Run ____<br>Log Number ____<br>Comments ____ | Dish No. ____<br>Dish Tare Wt. ____ g<br>Dish+Sample Wt. ____ g<br>Sample Wt. ____ g |
| 5 | Test ____ Run ____<br>Log Number ____<br>Comments ____ | Dish No. ____<br>Dish Tare Wt. ____ g<br>Dish+Sample Wt. ____ g<br>Sample Wt. ____ g |

Blank Solvent Wt. 0.0001 g

*Results:*

| Field Blk. | Run 1 | Run 2 | Run 3 | Run 4 | Run 5 |
|---|---|---|---|---|---|
| | 0.0014 | 0.0034 | 0.0021 | D-29 | |

LSC-03.GR

Interpoll Laboratories
(612) 786-6020

# EPA Method 5 Data Reporting Sheet
## Probe/Cyclone Wash

Job ACS
Team Leader DB
Date Submitted 11-12-93
Test No. 13
Date of Analysis 11-24-93
Transport Leakage ☒ None ☐ _____ ml

Source West Pellet Cooler
Test Site Stack
Date of Test 11-11-93
No. of Runs Completed 3
Technician C. Helgeson
Solvent Acetone

| | | |
|---|---|---|
| 0 | Test 13 Run 0<br>Field Blank<br>Log Number 1636-119P<br>Vol. of Solvent 100 ml<br>*Solvent Residue 4.0 ug/ml | Dish No. 102<br>Dish Tare Wt. 44.3246 g<br>Dish+Sample Wt 44.3250 g<br>Sample Wt. 0.0004 g |
| 1 | Test 13 Run 1<br>Vol. of Solvent 250 ml<br>Log Number -120P<br>Comments | Dish No. 110<br>Dish Tare Wt. 49.7362 g<br>Dish+Sample Wt. 49.9663 g<br>Sample Wt. 0.2301 g |
| 2 | Test 13 Run 2<br>Vol. of Solvent 175 ml<br>Log Number -121P<br>Comments | Dish No. 410<br>Dish Tare Wt. 50.5571 g<br>Dish+Sample Wt 50.8166 g<br>Sample Wt. 0.2595 g |
| 3 | Test 13 Run 3<br>Vol. of Solvent 220 ml<br>Log Number -122P<br>Comments | Dish No. 616<br>Dish Tare Wt. 50.9283 g<br>Dish+Sample Wt. 51.1760 g<br>Sample Wt. 0.2477 g |
| 4 | Test ____ Run ____<br>Vol. of Solvent ____ ml<br>Log Number<br>Comments | Dish No.<br>Dish Tare Wt. g<br>Dish+Sample Wt. g<br>Sample Wt. g |
| 5 | Test ____ Run ____<br>Vol. of Solvent ____ ml<br>Log Number<br>Comments | Dish No.<br>Dish Tare Wt. g<br>Dish+Sample Wt. g<br>Sample Wt. g |

*Solvent Residue 4.0 ug/ml = [(Sample Wt. 0.0004 g)($10^6$)]/Vol. of Sol. 100 ml
EPA-M5 Acetone Residue Blank Spec. ≤ 7.8 ug/ml

*Results:*

| Field Blk. | Run 1 | Run 2 | Run 3 | Run 4 | Run 5 |
|---|---|---|---|---|---|
| | 0.2291 | 0.2588 | 0.2468 | D-30 | |

LSC-01YR

Interpoll Laboratories
(612) 786-6020

# EPA Method 5 Data Reporting Sheet
## Filter Gravimetrics

Job ACS
Team Leader DB
Date Submitted 11-12-93
Test No. 13
Date of Analysis 11-26-93

Source West Pellet cooler
Test Site Stack
Date of Test 11-11-93
No. of Runs Completed 3
Technician C. Helgeson

| | | |
|---|---|---|
| 0 | Test 13 Run 0<br>Field Blank<br>Log Number 1636-119F<br>Comments | Filter No. 5867<br>Filter Type 4"GF<br>Filter Tare Wt. .9320 g<br>Filter+Sample Wt. .9320 g<br>Sample Wt. 0.0000 g |
| 1 | Test 13 Run 1<br>Log Number -120F<br>Comments | Filter No. 6007<br>Filter Type 4"GF<br>Filter Tare Wt. .8505 g<br>Filter+Sample Wt. .9316 g<br>Sample Wt. 0.0811 g |
| 2 | Test 13 Run 2<br>Log Number -121F<br>Comments | Filter No. 6008<br>Filter Type 4"GF<br>Filter Tare Wt. .8542 g<br>Filter+Sample Wt. .9031 g<br>Sample Wt. 0.0489 g |
| 3 | Test 13 Run 3<br>Log Number -122F<br>Comments | Filter No. 6009<br>Filter Type 4"GF<br>Filter Tare Wt. .8629 g<br>Filter+Sample Wt. 1.0049 g<br>Sample Wt. 0.1420 g |
| 4 | Test ____ Run ____<br>Log Number<br>Comments | Filter No.<br>Filter Type<br>Filter Tare Wt. g<br>Filter+Sample Wt. g<br>Sample Wt. g |
| 5 | Test ____ Run ____<br>Log Number<br>Comments | Filter No.<br>Filter Type<br>Filter Tare Wt. g<br>Filter+Sample Wt. g<br>Sample Wt. g |

*Results:*

| Field Blk. | Run 1 | Run 2 | Run 3 | Run 4 | Run 5 |
|---|---|---|---|---|---|
| | 0.0811 | 0.0489 | 0.1420 | | |

| Field Blk. | Run 1 | Run 2 | Run 3 | Run 4 | Run 5 |
|---|---|---|---|---|---|
| | 0.3116 | 0.3111 | 0.3909 | | |

LSC-02PR

Interpoll Laboratories
(612) 786-6020

# EPA Method 5 Data Reporting Sheet
## Impinger Catch/Minnesota Protocol

Job ACS
Team Leader SLB
Date Submitted 11-12-93
Test No. 12
Date of Analysis 11-29-93

Source Pellet Loadout
Test Site Stack
Date of Test 11-11-93
No. of Runs Completed 3
Technician C. Helgeson

| | | |
|---|---|---|
| 0 | Test 12 Run 0<br>Field Blank<br>Log Number 1636-117 I<br>Comments | Dish No. 14<br>Dish Tare Wt. 47.6594 g<br>Dish+Sample Wt. 47.6595 g<br>Sample Wt. 0.0001 g |
| 1 | Test 12 Run 1<br>Log Number -116 I<br>Comments | Dish No. 16<br>Dish Tare Wt. 52.8212 g<br>Dish+Sample Wt. 52.8251 g<br>Sample Wt. 0.0039 g |
| 2 | Test 12 Run 2<br>Log Number -117 I<br>Comments | Dish No. 17<br>Dish Tare Wt. 48.3905 g<br>Dish+Sample Wt. 48.3926 g<br>Sample Wt. 0.0021 g |
| 3 | Test 12 Run 3<br>Log Number -118 I<br>Comments | Dish No. 18<br>Dish Tare Wt. 49.9879 g<br>Dish+Sample Wt. 49.9890 g<br>Sample Wt. 0.0011 g |
| 4 | Test ____ Run ____<br>Log Number<br>Comments | Dish No.<br>Dish Tare Wt. g<br>Dish+Sample Wt. g<br>Sample Wt. g |
| 5 | Test ____ Run ____<br>Log Number<br>Comments | Dish No.<br>Dish Tare Wt. g<br>Dish+Sample Wt. g<br>Sample Wt. g |

Blank Solvent Wt. 0.0001 g

*Results:*

| Field Blk. | Run 1 | Run 2 | Run 3 | Run 4 | Run 5 |
|---|---|---|---|---|---|
| | 0.0038 | 0.0020 | 0.0010 | D-32 | |

LSC-03.GR

Interpoll Laboratories
(612) 786-6020

# EPA Method 5 Data Reporting Sheet
## Probe/Cyclone Wash

Job ACS
Team Leader SCB
Date Submitted 11-12-93
Test No. 12
Date of Analysis 11-24-93
Transport Leakage ☒ None ☐ _____ ml

Source Pellet Loadout
Test Site Stack
Date of Test 11-11-93
No. of Runs Completed 3
Technician C. Hellesen
Solvent Acetone

| | | |
|---|---|---|
| 0 | Test ____ Run 0<br>Field Blank<br>Log Number ____<br>Vol. of Solvent ____ ml<br>*Solvent Residue 4.0 ug/ml | Dish No. ____<br>Dish Tare Wt. ____ g<br>Dish+Sample Wt. ____ g<br>Sample Wt. ____ g |
| 1 | Test 12 Run 1<br>Vol. of Solvent 70 ml<br>Log Number 1636-116P<br>Comments ____ | Dish No. 93<br>Dish Tare Wt. 53.9827 g<br>Dish+Sample Wt. 53.9874 g<br>Sample Wt. 0.0047 g |
| 2 | Test 12 Run 2<br>Vol. of Solvent 85 ml<br>Log Number -117P<br>Comments ____ | Dish No. 93A<br>Dish Tare Wt. 49.1988 g<br>Dish+Sample Wt. 49.2011 g<br>Sample Wt. 0.0023 g |
| 3 | Test 12 Run 3<br>Vol. of Solvent 65 ml<br>Log Number -118P<br>Comments ____ | Dish No. 100<br>Dish Tare Wt. 45.9676 g<br>Dish+Sample Wt. 45.9688 g<br>Sample Wt. 0.0012 g |
| 4 | Test ____ Run ____<br>Vol. of Solvent ____ ml<br>Log Number ____<br>Comments ____ | Dish No. ____<br>Dish Tare Wt. ____ g<br>Dish+Sample Wt. ____ g<br>Sample Wt. ____ g |
| 5 | Test ____ Run ____<br>Vol. of Solvent ____ ml<br>Log Number ____<br>Comments ____ | Dish No. ____<br>Dish Tare Wt. ____ g<br>Dish+Sample Wt. ____ g<br>Sample Wt. ____ g |

*Solvent Residue ____ ug/ml = [(Sample Wt. ____ g)(10⁶)]/Vol. of Sol. ____ ml
EPA-M5 Acetone Residue Blank Spec. ≤ 7.8 ug/ml

*Results:*

| Field Blk. | Run 1 | Run 2 | Run 3 | Run 4 | Run 5 |
|---|---|---|---|---|---|
| | 0.0044 | 0.0020 | 0.0009 | D-33 | |

LSC-01YR

Interpoll Laboratories
(612) 786-6020

# EPA Method 5 Data Reporting Sheet
## Filter Gravimetrics

Job ACS
Team Leader SCB
Date Submitted 11-12-93
Test No. 12
Date of Analysis 11-24-93

Source Pellet Loadout
Test Site Stack
Date of Test 11-11-93
No. of Runs Completed 3
Technician C. Helgeson

| | | |
|---|---|---|
| 0 | Test ____ Run 0<br>Field Blank<br>Log Number ____<br>Comments ____ | Filter No. ____<br>Filter Type ____<br>Filter Tare Wt. ____ g<br>Filter+Sample Wt. ____ g<br>Sample Wt. ____ g |
| 1 | Test 12 Run 1<br>Log Number 1636-116F<br>Comments ____ | Filter No. 5964<br>Filter Type 4"GF<br>Filter Tare Wt. .9323 g<br>Filter+Sample Wt. .9328 g<br>Sample Wt. 0.0005 g |
| 2 | Test 12 Run 2<br>Log Number -117F<br>Comments ____ | Filter No. 5954<br>Filter Type 4"GF<br>Filter Tare Wt. .9447 g<br>Filter+Sample Wt. .9453 g<br>Sample Wt. 0.0006 g |
| 3 | Test 12 Run 3<br>Log Number -118F<br>Comments ____ | Filter No. 5966<br>Filter Type 4"GF<br>Filter Tare Wt. .9301 g<br>Filter+Sample Wt. .9310 g<br>Sample Wt. 0.0009 g |
| 4 | Test ____ Run ____<br>Log Number ____<br>Comments ____ | Filter No. ____<br>Filter Type ____<br>Filter Tare Wt. ____ g<br>Filter+Sample Wt. ____ g<br>Sample Wt. ____ g |
| 5 | Test ____ Run ____<br>Log Number ____<br>Comments ____ | Filter No. ____<br>Filter Type ____<br>Filter Tare Wt. ____ g<br>Filter+Sample Wt. ____ g<br>Sample Wt. ____ g |

*Results:*

| Field Blk. | Run 1 | Run 2 | Run 3 | Run 4 | Run 5 |
|---|---|---|---|---|---|
| | 0.0005 | 0.0006 | 0.0009 | | |

| Field Blk. | Run 1 | Run 2 | Run 3 | Run 4 | Run 5 |
|---|---|---|---|---|---|
| | 0.0057 | 0.0046 | 0.0028 | | |

LSC-02PR

Interpoll Laboratories
(612) 786-6020

## EPA Method 6 Sulfur Dioxide Calculation Data Sheet[1]

Job: ACS
Team leader: SLB
Date submitted: 11-12-93
Test Number: 9
Date of analysis: 11-24-93

Source: A Pulp Dryer
Test Site: Stack
Date of Test: 11-11-93
No. of Runs Completed: 3
Technician: C. Helgeson

### *MEQ Calculation*

$$MEQ = \frac{DF\ N\ (V_s - V_b)\ V_s}{V_a}$$

DF = Dilution Factor
N = Normality of Titrant
$V_s$ = Volume of Titrant Sample (ml)
$V_b$ = Volume of Titrant Blank (ml)
$V_s$ = Final Volume of sample (ml)
$V_a$ = Volume of Aliquot (ml)

### *Water Catch*

Test 9 Run 1 MEQ = (1.0)(.0100)(1.90 - .15)(1010) / (20.0) = 0.884 MEQ

Test 9 Run 2 MEQ = (1.0)(.0100)(1.75 - .15)(1010) / (20.0) = 0.808 MEQ

Test 9 Run 3 MEQ = (1.0)(.0100)(1.75 - .15)(1010) / (20.0) = 0.808 MEQ

### *3% Peroxide Catch*

Test 9 Run 1 MEQ = (1.0)(.0100)(4.90 - .15)(500) / (20.0) = 1.19 MEQ

Test 9 Run 2 MEQ = (1.0)(.0100)(3.50 - .15)(500) / (20.0) = 0.838 MEQ

Test 9 Run 3 MEQ = (1.0)(.0100)(3.55 - .15)(500) / (20.0) = 0.850 MEQ

### *Total MEQ Per Run:*

Test 9 Run 1 = 2.07 MEQ
Test 9 Run 2 = 1.65 MEQ
Test 9 Run 3 = 1.66 MEQ

Comments:

1 Form to be used in conjunction with combination method 5 and 6 train.

S-421A

Interpoll Laboratories
(612) 786-6020

## EPA Method 6 Sulfur Dioxide Calculation Data Sheet[1]

Job: ACS
Team leader: SLB
Date submitted: 11-12-93
Test Number: 5
Date of analysis: 11-19-93

Source: B Pulp Dryer
Test Site: Stack
Date of Test: 11-10-93
No. of Runs Completed: 3
Technician: C. Helgeson

### *MEQ Calculation*

$$MEQ = \frac{DF\ N\ (V_s - V_b)\ V_s}{V_a}$$

DF = Dilution Factor
N = Normality of Titrant
$V_s$ = Volume of Titrant Sample (ml)
$V_b$ = Volume of Titrant Blank (ml)
$V_s$ = Final Volume of sample (ml)
$V_a$ = Volume of Aliquot (ml)

### *Water Catch*

Test 5 Run 1 — MEQ = (1.0)(.0100)(2.60 − .15)(1010) / (20.0) = 1.24 MEQ

Test 5 Run 2 — MEQ = (1.0)(.0100)(2.40 − .15)(1010) / (20.0) = 1.14 MEQ

Test 5 Run 3 — MEQ = (1.0)(.0100)(2.10 − .15)(1010) / (20.0) = 0.985 MEQ

### *3% Peroxide Catch*

Test 5 Run 1 — MEQ = (1.0)(.0100)(5.45 − .15)(500) / (20.0) = 1.33 MEQ

Test 5 Run 2 — MEQ = (1.0)(.0100)(4.55 − .15)(500) / (20.0) = 1.10 MEQ

Test 5 Run 3 — MEQ = (1.0)(.0100)(3.80 − .15)(500) / (20.0) = 0.913 MEQ

### *Total MEQ Per Run:*

Test 5 Run 1 = 2.57 MEQ
Test 5 Run 2 = 2.24 MEQ
Test 5 Run 3 = 1.90 MEQ

Comments:

1 Form to be used in conjunction with combination method 5 and 6 train.

S-421A

Interpoll Laboratories
(612) 786-6020

## EPA Method 6 Sulfur Dioxide Calculation Data Sheet[1]

Job ACS
Team leader SLB
Date submitted 11-12-93
Test Number 1
Date of analysis 11-19-93

Source C Pulp Dryer
Test Site Stack
Date of Test 11-9-93
No. of Runs Completed 3
Technician C. Helgoson

### *MEQ Calculation*

$$MEQ = \frac{DF\ N\ (V_s - V_b)\ V_s}{V_a}$$

DF = Dilution Factor
N = Normality of Titrant
$V_s$ = Volume of Titrant Sample (ml)
$V_b$ = Volume of Titrant Blank (ml)
$V_s$ = Final Volume of sample (ml)
$V_a$ = Volume of Aliquot (ml)

### *Water Catch*

Test 1 Run 1 MEQ = (1.0)(.0100)(2.95 - .15)(1010) / (20.0) = 1.41 MEQ

Test 1 Run 2 MEQ = (1.0)(.0100)(2.80 - .15)(1010) / (20.0) = 1.34 MEQ

Test 1 Run 3 MEQ = (1.0)(.0100)(3.10 - .15)(1010) / (20.0) = 1.49 MEQ

### *3% Peroxide Catch*

Test 1 Run 1 MEQ = (1.0)(.0100)(4.50 - .15)(500) / (20.0) = 1.09 MEQ

Test 1 Run 2 MEQ = (1.0)(.0100)(0.50 - .15)(500) / (20.0) = 0.088 MEQ

Test 1 Run 3 MEQ = (1.0)(.0100)(6.25 - .15)(500) / (20.0) = 1.53 MEQ

### *Total MEQ Per Run:*

Test 1 Run 1 = 2.50 MEQ
Test 1 Run 2 = 1.43 MEQ
Test 1 Run 3 = 3.02 MEQ

Comments:

1 Form to be used in conjunction with combination method 5 and 6 train.
S-421A

Interpoll Laboratories
(612)786-6020

EPA Method 7A Recovery and Analysis Data Sheet (1)

| **********SOURCE********** | **********RECOVERY********** | **********ANALYTICAL********** |
|---|---|---|
| Job ACS / E. Grand Forks | Date of Recovery 11-17-93 | Date of Analysis 11-19-93 |
| Source A Pulp Dryer Stack | Recovered by C. Helgeson | Analyst BMB |
| Date of Sampling 11-11-93 | Recovery volume 500 ml | Eluent D34A |
| Test No(s) 9 | Barometric at time 29.16 IN.HG. | Chromatograph: Dionex System 4000i |

Samples collected in accordance with EPA Method 7, CFR Title 40, Part 60, Appendix A. Samples analyzed in accordance with EPA Method 7A by ion chromatography. Mercury manometers used to measure flask pressures/vacuums in sampling and in recovery. Thommen Model TX 19 jewel barometer calibrated against laboratory mercury in glass barometer used to measure field barometric pressure. Three field blanks are prepared and the average used to correct measured nitrate concentrations. All samples are analyzed as a batch using a Dionex Model 4270 Chromatograph Data Intergrator. The integrator is programmed to give the actual concentration of the 500 ml recovered sample even if a subsequent dilution was made. The dilution is indicated here as well as on the chromatogram.

$$C_{RS} = DF(C_{DS}) \qquad M_{NO_3} = (C_{RS} - \overline{C}_B)V_R \qquad \overline{C}_B = (C_{B1} + C_{B2} + C_{B3})/3$$

where:

$C_{RS}$ = concentration of nitrate in 500 ml recovered sample in ug/ml

DF = dilution factor

$C_{DS}$ = concentration of nitrate of a 500 ml recovered sample which has been diluted by a factor of DF to bring it into the proper range for the ion chromatograph. This value is an intermediate number and is not outputted by the electronic integrator which is programmed to output the concentration of the original undiluted 500 ml recovered sample.

$M_{NO_3}$ = total mass of nitrate in micrograms in the 500 ml recovered sample and/or in the 2L flask.

$C_B$ = average conc. of nitrate in 500 ml recovered samples from the three field blanks (ug/ml)

$C_{B1}$, $C_{B2}$, $C_{B3}$ = conc. of nitrate in 500 ml recovered samples from the three field blanks (ug/ml)

$V_R$ = recovery volume for samples and field blanks in ml

S-340(1)

Interpoll Laboratories
(612)786-6020

EPA Method 7A Recovery and Analysis Data Sheet (2)

| | Sample Log ID No. | Flask No. | Test/ Run | Final Flask Conditions $t_f$ (°F) | + | - | $\Delta P_g$ (IN.HG.) | Chrom Run No. | DF | Nitrate Concentration (ug/ml) Uncorr. for blank $C_{RS}$ | Corr. for blank ($C_{RS} - \bar{C}_B$) | Total nitrate in Sample (ug) ($M_{NO_3^-}$) |
|---|---|---|---|---|---|---|---|---|---|---|---|---|
| 1 | 1636-01 | 13 | 9-1-1 | 72 | | | | | | | | |
| 2 | -02 | 14 | 9-1-2 | | | | | | | | | |
| 3 | -03 | 15 | 9-1-3 | | | | | | | | | |
| 4 | -04 | 16 | 9-1-1 | | | | | | | | | |
| 5 | -05 | 17 | 9-2-2 | | | | | | | | | |
| 6 | -06 | 18 | 9-2-3 | | | | | | | | | |
| 7 | -07 | 73 | 9-2-1 | | ✓ | | 0.1 | | | 1.00 | 1.00 | 500 |
| 8 | -08 | 74 | 9-2-2 | | | ✓ | 0.6 | | | 0.958 | 0.958 | 479 |
| 9 | -09 | 75 | 9-3-3 | | ✓ | | 0.2 | | | 0.973 | 0.973 | 487 |
| 10 | -10 | 76 | 9-3-1 | | | ✓ | 1.5 | | | 0.978 | 0.978 | 489 |
| 11 | -11 | 77 | 9-3-2 | | | ✓ | 0.4 | | | 0.998 | 0.998 | 499 |
| 12 | -12 | 78 | 9-3-3 | | | ✓ | 0.7 | | | 0.997 | 0.997 | 499 |
| 13 | | | | | | | | | | | | |
| 14 | | | | | | | | | | | | |
| 15 | | | | | | | | | | | | |
| 16 | | | | | | | | | | | | |
| 17 | | | | | | | | | | | | |
| 18 | | | | | | | | | | | | |
| 19 | | | | | | | | | | | | |
| 20 | | | | | | | | | | | | |
| 21 | | | | | | | | | | | | |
| 22 | | | | | | | | | | | | |
| 23 | | | | | | | | | | | | |
| 24 | | | | | | | | | | | | |
| 25 | | | | | | | | | | | | |
| 26 | | | | | | | | | | | | |
| 27 | | | | | | | | | | | | |
| Blank 1 | | | | | | | | | 1 | CB1 | | |
| Blank 2 | | | | | | | | | 1 | CB2 | | $\bar{C}_B$ = |
| Blank 3 | | | | | | | | | 1 | CB3 | | |

S-340(2) R-9/85

Interpoll Laboratories
(612)786-6020

## EPA Method 7A Recovery and Analysis Data Sheet (1)

| **********SOURCE********** | **********RECOVERY********** | **********ANALYTICAL********** |
|---|---|---|
| Job ACS / E. Grand Forks | Date of Recovery 11-18-93 | Date of Analysis 11-19-93 |
| Source A Pulp Dryer Stack | Recovered by C. Helgeson | Analyst SMS |
| Date of Sampling 11-11-93 | Recovery volume 500 ml | Eluent A34A |
| Test No(s) 9 | Barometric at time ~~29.16~~ 29.056 IN.HG. | Chromatograph: Dionex System 4000i |

Samples collected in accordance with EPA Method 7, CFR Title 40, Part 60, Appendix A. Samples analyzed in accordance with EPA Method 7A by ion chromatography. Mercury manometers used to measure flask pressures/vacuums in sampling and in recovery. Thommen Model TX 19 jewel barometer calibrated against laboratory mercury in glass barometer used to measure field barometric pressure. Three field blanks are prepared and the average used to correct measured nitrate concentrations. All samples are analyzed as a batch using a Dionex Model 4270 Chromatograph Data Intergrator. The integrator is programmed to give the actual concentration of the 500 ml recovered sample even if a subsequent dilution was made. The dilution is indicated here as well as on the chromatogram.

$$C_{RS} = DF(C_{DS}) \qquad M_{NO_3} = (C_{RS} - \bar{C}_B)V_R \qquad \bar{C}_B = (C_{B1} + C_{B2} + C_{B3})/3$$

where: $C_{RS}$ = concentration of nitrate in 500 ml recovered sample in ug/ml

$DF$ = dilution factor

$C_{DS}$ = concentration of nitrate of a 500 ml recovered sample which has been diluted by a factor of DF to bring it into the proper range for the ion chromatograph. This value is an intermediate number and is not outputted by the electronic integrator which is programmed to output the concentration of the original undiluted 500 ml recovered sample.

$M_{NO_3}$ = total mass of nitrate in micrograms in the 500 ml recovered sample and/or in the 2L flask.

$C_B$ = average conc. of nitrate in 500 ml recovered samples from the three field blanks (ug/ml)

$C_{B1}$, $C_{B2}$, $C_{B3}$ = conc. of nitrate in 500 ml recovered samples from the three field blanks (ug/ml)

$V_R$ = recovery volume for samples and field blanks in ml

S-340(1)

29.056 For Flask 13-18

Interpoll Laboratories
(612)786-6020

EPA Method 7A Recovery and Analysis Data Sheet (2)

| | Sample Log ID No. | Flask No. | Test/ Run | Final Flask Conditions $t_f$ (°F) | + | - | $\Delta P_g$ (IN.HG.) | Chrom Run No. | DF | Nitrate Concentration (ug/ml) Uncorr. for blank $C_{RS}$ | Corr. for blank ($C_{RS} - C_B$) | Total nitrate in Sample (ug) ($M_{NO_3^-}$) |
|---|---|---|---|---|---|---|---|---|---|---|---|---|
| 1 | 1636-01 | 13 | 9-1-1 | 72 | | ✓ | 0.4 | | 1 | 0.885 | 0.885 | 443 |
| 2 | -02 | 14 | 9-1-2 | | ✓ | | 0.2 | | 1 | 0.920 | 0.920 | 460 |
| 3 | -03 | 15 | 9-1-3 | | | ✓ | 0.2 | | 1 | 0.883 | 0.880 | 441 |
| 4 | -04 | 16 | 9-1-1 | | | ✓ | 0.1 | | 1 | 0.890 | 0.890 | 445 |
| 5 | -05 | 17 | 9-2-2 | | ✓ | | 0.3 | | 1 | 0.909 | 0.909 | 455 |
| 6 | -06 | 18 | 9-2-3 | | ✓ | | 0.1 | | 1 | 0.915 | 0.915 | 458 |
| 7 | -07 | 73 | 9-2-1 | | ✓ | | 0.1 | | 1 | | | |
| 8 | -08 | 74 | 9-2-2 | | | ✓ | 0.6 | | 1 | | | |
| 9 | -09 | 75 | 9-3-3 | | ✓ | | 0.2 | | 1 | | | |
| 10 | -10 | 76 | 9-3-1 | | | ✓ | 1.5 | | 1 | | | |
| 11 | -11 | 77 | 9-3-2 | | | ✓ | 0.4 | | 1 | | | |
| 12 | -12 | 78 | 9-3-3 | | | ✓ | 0.7 | | 1 | | | |
| 13 | | | | | | | | | | | | |
| 14 | | | | | | | | | | | | |
| 15 | | | | | | | | | | | | |
| 16 | | | | | | | | | | | | |
| 17 | | | | | | | | | | | | |
| 18 | | | | | | | | | | | | |
| 19 | | | | | | | | | | | | |
| 20 | | | | | | | | | | | | |
| 21 | | | | | | | | | | | | |
| 22 | | | | | | | | | | | | |
| 23 | | | | | | | | | | | | |
| 24 | | | | | | | | | | | | |
| 25 | | | | | | | | | | | | |
| 26 | | | | | | | | | | | | |
| 27 | | | | | | | | | | | | |
| Blank 1 | | | | | | | | | 1 | CB1 | | |
| Blank 2 | | | | | | | | | 1 | CB2 | | $\bar{C}_B$ = |
| Blank 3 | | | | | | | | | 1 | CB3 | | |

S-340(2' ^-9/85

Interpoll Laboratories
(612)786-6020

EPA Method 7A Recovery and Analysis Data Sheet (1)

| **********SOURCE********** | **********RECOVERY********** | **********ANALYTICAL********** |
|---|---|---|
| Job ACS / E. Grand Forks | Date of Recovery C. Helgeson | Date of Analysis 11-19-93 |
| Source B Pulp Dryer stack | Recovered by 11-17-93 | Analyst BMS |
| Date of Sampling 11-10-93 | Recovery volume 500 ml | Eluent ASU/A |
| Test No(s) 5 | Barometric at time 29.16 IN.HG. | Chromatograph: Dionex System 4000i |

Samples collected in accordance with EPA Method 7, CFR Title 40, Part 60, Appendix A. Samples analyzed in accordance with EPA Method 7A by ion chromatography. Mercury manometers used to measure flask pressures/vacuums in sampling and in recovery. Thommen Model TX 19 jewel barometer calibrated against laboratory mercury in glass barometer used to measure field barometric pressure. Three field blanks are prepared and the average used to correct measured nitrate concentrations. All samples are analyzed as a batch using a Dionex Model 4270 Chromatograph Data Intergrator. The integrator is programmed to give the actual concentration of the 500 ml recovered sample even if a subsequent dilution was made. The dilution is indicated here as well as on the chromatogram.

$$C_{RS} = DF(C_{DS}) \qquad M_{NO_3} = (C_{RS} - \overline{C}_B)V_R \qquad \overline{C}_B = (C_{B1} + C_{B2} + C_{B3})/3$$

where: $C_{RS}$ = concentration of nitrate in 500 ml recovered sample in ug/ml

DF = dilution factor

$C_{DS}$ = concentration of nitrate of a 500 ml recovered sample which has been diluted by a factor of DF to bring it into the proper range for the ion chromatograph. This value is an intermediate number and is not outputted by the electronic integrator which is programmed to output the concentration of the original undiluted 500 ml recovered sample.

$M_{NO_3}$ = total mass of nitrate in micrograms in the 500 ml recovered sample and/or in the 2L flask.

$C_B$ = average conc. of nitrate in 500 ml recovered samples from the three field blanks (ug/ml)

$C_{B1}$, $C_{B2}$, $C_{B3}$ = conc. of nitrate in 500 ml recovered samples from the three field blanks (ug/ml)

$V_R$ = recovery volume for samples and field blanks in ml

S-340(1)

Interpoll Laboratories
(612)786-6020

EPA Method 7A Recovery and Analysis Data Sheet (2)

| | Sample Log ID No. | Flask No. | Test/ Run | Final Flask Conditions $t_f$ (°F) | + | - | $\Delta P_g$ (IN.HG.) | Chrom Run No. | DF | Nitrate Concentration (ug/ml) Uncorr. for blank $C_{RS}$ | Corr. for blank ($C_{RS} - \bar{C}_B$) | Total nitrate in Sample (ug) ($M_{NO_3^-}$) |
|---|---|---|---|---|---|---|---|---|---|---|---|---|
| 1 | 1636-13 | 25 | 5-1-1 | 72 | | ✓ | 1.3 | | 1 | 0.740 | 0.740 | 370 |
| 2 | -14 | 26 | 5-1-2 | | | ✓ | 0.1 | | 1 | 0.6666 | 0.6666 | 333 |
| 3 | -15 | 27 | 5-1-3 | | | ✓ | 0.5 | | 1 | 0.564 | 0.564 | 282 |
| 4 | -16 | 28 | 5-1-1 | | | ✓ | 0.3 | | 1 | 0.560 | 0.560 | 280 |
| 5 | -17 | 29 | 5-2-2 | | ✓ | | 0.5 | | 1 | 0.637 | 0.637 | 319 |
| 6 | -18 | 30 | 5-2-3 | | | ✓ | 0.3 | | 1 | 0.601 | 0.601 | 301 |
| 7 | -19 | 31 | 5-2-1 | | | ✓ | 2.3 | | 1 | 0.600 | 0.600 | 300 |
| 8 | -20 | 32 | 5-2-2 | | | ✓ | 0.3 | | 1 | 0.620 | 0.620 | 310 |
| 9 | -21 | 33 | 5-3-3 | | | | 0 | | 1 | 0.594 | 0.594 | 297 ~~178~~ |
| 10 | -22 | 34 | 5-3-1 | | | ✓ | 0.7 | | 1 | 0.610 | 0.610 | 305 |
| 11 | -23 | 35 | 5-3-2 | | | ✓ | 2.0 | | 1 | 0.572 | 0.572 | 286 |
| 12 | -24 | 36 | 5-3-3 | | | ✓ | 2.1 | | 1 | 0.635 | 0.635 | 318 ~~320~~ |
| 13 | | | | | | | | | | | | |
| 14 | | | | | | | | | | | | |
| 15 | | | | | | | | | | | | |
| 16 | | | | | | | | | | | | |
| 17 | | | | | | | | | | | | |
| 18 | | | | | | | | | | | | |
| 19 | | | | | | | | | | | | |
| 20 | | | | | | | | | | | | |
| 21 | | | | | | | | | | | | |
| 22 | | | | | | | | | | | | |
| 23 | | | | | | | | | | | | |
| 24 | | | | | | | | | | | | |
| 25 | | | | | | | | | | | | |
| 26 | | | | | | | | | | | | |
| 27 | | | | | | | | | | | | |
| Blank 1 | | | | | | | | | 1 | CB1 | | |
| Blank 2 | | | | | | | | | 1 | CB2 | | $\bar{C}_B$ = |
| Blank 3 | | | | | | | | | 1 | CB3 | | |

S-340(2) R-9/85

Interpoll Laboratories
(612)786-6020

EPA Method 7A Recovery and Analysis Data Sheet (1)

| **********SOURCE********** | **********RECOVERY********** | **********ANALYTICAL********** |
|---|---|---|
| Job ACS / E Grand Forks | Date of Recovery 11-17-93 | Date of Analysis 11-19-93 |
| Source C Pulp Dryer Stack | Recovered by C. Helgeson | Analyst BMS |
| Date of Sampling 11-9-93 | Recovery volume 500 ml | Eluent ASHA |
| Test No(s) 1 | Barometric at time 29.16 IN.HG. | Chromatograph: Dionex System 4000i |

Samples collected in accordance with EPA Method 7, CFR Title 40, Part 60, Appendix A. Samples analyzed in accordance with EPA Method 7A by ion chromatography. Mercury manometers used to measure flask pressures/vacuums in sampling and in recovery. Thommen Model TX 19 jewel barometer calibrated against laboratory mercury in glass barometer used to measure field barometric pressure. Three field blanks are prepared and the average used to correct measured nitrate concentrations. All samples are analyzed as a batch using a Dionex Model 4270 Chromatograph Data Intergrator. The integrator is programmed to give the actual concentration of the 500 ml recovered sample even if a subsequent dilution was made. The dilution is indicated here as well as on the chromatogram.

$$C_{RS} = DF(C_{DS}) \qquad M_{NO_3} = (C_{RS} - \overline{C}_B)V_R \qquad \overline{C}_B = (C_{B1} + C_{B2} + C_{B3})/3$$

where: $C_{RS}$ = concentration of nitrate in 500 ml recovered sample in ug/ml

DF = dilution factor

$C_{DS}$ = concentration of nitrate of a 500 ml recovered sample which has been diluted by a factor of DF to bring it into the proper range for the ion chromatograph. This value is an intermediate number and is not outputted by the electronic integrator which is programmed to output the concentration of the original undiluted 500 ml recovered sample.

$M_{NO_3}$ = total mass of nitrate in micrograms in the 500 ml recovered sample and/or in the 2L flask.

$C_B$ = average conc. of nitrate in 500 ml recovered samples from the three field blanks (ug/ml)

$C_{B1}$, $C_{B2}$, $C_{B3}$ = conc. of nitrate in 500 ml recovered samples from the three field blanks (ug/ml)

$V_R$ = recovery volume for samples and field blanks in ml

S-340(1)

Interpoll Laboratories
(612)786-6020

EPA Method 7A Recovery and Analysis Data Sheet (2)

| | Sample Log ID No. | Flask No. | Test/ Run | Final Flask Conditions $t_f$ (°F) | + | - | $\Delta P_g$ (IN.HG.) | Chrom Run No. | DF | Nitrate Concentration (ug/ml) Uncorr. for blank $C_{RS}$ | Corr. for blank ($C_{RS} - C_B$) | Total nitrate in Sample (ug) ($M_{NO_3^-}$) |
|---|---|---|---|---|---|---|---|---|---|---|---|---|
| 1 | 1636-25 | 37 | 1-1-1 | 72 | | | 0 | | 1 | 0.876 | 0.876 | 438 |
| 2 | -26 | 38 | 1-1-2 | | ✓ | | 1.1 | | 1 | 0.930 | 0.930 | 465 |
| 3 | -27 | 39 | 1-1-3 | | | | 0 | | 1 | 0.932 | 0.932 | 466 |
| 4 | -28 | 40 | 1-1-1 | | | ✓ | 1.4 | | 1 | 0.939 | 0.939 | 470 |
| 5 | -29 | 41 | 1-2-2 | | | ✓ | 1.3 | | 1 | 0.964 | 0.964 | 482 |
| 6 | -30 | 42 | 1-2-3 | | | ✓ | 1.5 | | 1 | 0.974 | 0.974 | 487 |
| 7 | -31 | 79 | 1-2-1 | | ✓ | | 0.3 | | 1 | 0.879 | 0.879 ~~0.876~~ 11-21-93 | 440 |
| 8 | -32 | 80 | 1-2-2 | | ✓ | | 0.9 | | 1 | 0.894 | 0.894 | 447 |
| 9 | -33 | 81 | 1-3-3 | | ✓ | | 0.8 | | 1 | 0.802 | 0.802 | 401 |
| 10 | -34 | 82 | 1-3-1 | | | ✓ | 1.1 | | 1 | 0.890 | 0.890 | 445 |
| 11 | -35 | 83 | 1-3-2 | | | ✓ | 1.6 | | 1 | 0.907 | 0.907 | 454 |
| 12 | -36 | 84 | 1-3-3 | ✓ | ✓ | | 1.8 | | 1 | 0.846 | 0.846 | 423 |
| 13 | | | | | | | | | | | | |
| 14 | | | | | | | | | | | | |
| 15 | | | | | | | | | | | | |
| 16 | | | | | | | | | | | | |
| 17 | | | | | | | | | | | | |
| 18 | | | | | | | | | | | | |
| 19 | | | | | | | | | | | | |
| 20 | | | | | | | | | | | | |
| 21 | | | | | | | | | | | | |
| 22 | | | | | | | | | | | | |
| 23 | | | | | | | | | | | | |
| 24 | | | | | | | | | | | | |
| 25 | | | | | | | | | | | | |
| 26 | | | | | | | | | | | | |
| 27 | | | | | | | | | | | | |
| Blank 1 | | | | | | | | | 1 | CB1 | | |
| Blank 2 | | | | | | | | | 1 | CB2 | | |
| Blank 3 | | | | | | | | | 1 | CB3 | | |

$\bar{C}_B$ = _____

S-340(2) R-9/85