Note: This is a reference cited in *AP 42, Compilation of Air Pollutant Emission Factors, Volume I Stationary Point and Area Sources.* AP42 is located on the EPA web site at www.epa.gov/ttn/chief/ap42/

The file name refers to the reference number, the AP42 chapter and section. The file name "ref02_c01s02.pdf" would mean the reference is from AP42 chapter 1 section 2. The reference may be from a previous version of the section and no longer cited. The primary source should always be checked.

AP-42 Section Number: **9.9.1**

Reference Number: **26**

Title: **Test No. 73-GRN-1, Ralston Purina Company, Louisville, KY**

PEDCo Environmental

1972

AP-42 Section 9.9.1
Reference 26
Report Sect.
Reference

12/72

TEST NUMBER 73-GRN-1

RALSTON PURINA COMPANY
LOUISVILLE, KENTUCKY

Dec. 1972

PEDCo ENVIRONMENTAL

TEST NUMBER 73-GRN-1

RALSTON PURINA COMPANY
LOUISVILLE, KENTUCKY

PEDCO-ENVIRONMENTAL

TEST NUMBER 73-GRN-1

RALSTON PURINA COMPANY
LOUISVILLE, KENTUCKY

Prepared by

Richard W. Gerstle, P.E.
and
Robert S. Amick

EPA Project Officer

Thomas E. Ward

PEDCo-Environmental Specialists, Inc.
Cincinnati, Ohio

Contract No. 68-02-0237, Task 17

I. TABLE OF CONTENTS

		Page Number
II.	INTRODUCTION	1
III.	SUMMARY OF RESULTS	4
IV.	PROCESS DESCRIPTION	12
V.	PROCESS OPERATION	16
VI.	LOCATION OF SAMPLING POINTS	17
VII.	SAMPLING PROCEDURES	21
	APPENDICES	
A.	PARTICULATE RESULTS AND CALCULATIONS	
B.	GASEOUS RESULTS	
D.	FIELD DATA	
E.	SAMPLING PROCEDURES	
F.	LABORATORY REPORT	
G.	TEST LOG	
I.	PROJECT PARTICIPANTS AND TITLES	

II. INTRODUCTION

Tests Performed

A series of tests were conducted at the Ralston Purina Company, Chow Division Plant in Louisville, Kentucky on November 6 and 7, 1972. Tests were made to determine particulate concentrations at the inlet and outlet to the pellet cooler cyclone and at the outlet of the hammermill cyclone. Stack gas velocities, temperature, and moisture content were also measured during each test. Table 1 summarizes the test locations, dates and the measurements made.

Sampling Sites

Figure 1 shows the sampling site locations. Stack gases were sampled for particulate concentration before and after the cyclone serving the pellet cooling operation at Points A and B in Figure 1. The outlet site was located in a temporary duct which had been added to the cyclone to provide a suitable sampling site. Normally the cyclone is vented directly to the atmosphere from the fan.

The outlet to the hammermill cyclone was also sampled for particulate matter. Sampling was done at point C as shown in Figure 1, by using a temporary cyclone outlet stack extension. The cyclone, as normally operated, had a rain cap (Chinaman's hat) placed over the outlet.

TABLE 1

SUMMARY OF EMISSION MEASUREMENTS MADE AT

RALSTON PURINA COMPANY IN LOUISVILLE, KENTUCKY

DATE 1972	TEST NO.	TEST SITE	STACK GAS PARAMETERS			EMISSIONS
			Velocity	Temp.	$\%H_2O$	Particulate
11/6	1	Pellet Cooler Cyclone Inlet	↓	↓	↓	↓
11/6	2	Pellet Cooler Cyclone Outlet				
11/6	3	Pellet Cooler Cyclone Inlet				
11/6	4	Pellet Cooler Cyclone Outlet				
11/6	5	Pellet Cooler Cyclone Inlet				
11/6	6	Pellet Cooler Cyclone Outlet				
11/7	7	Hammermill Cyclone Outlet				
11/7	8	Hammermill Cyclone Outlet				
11/7	9	Hammermill Cyclone Outlet				

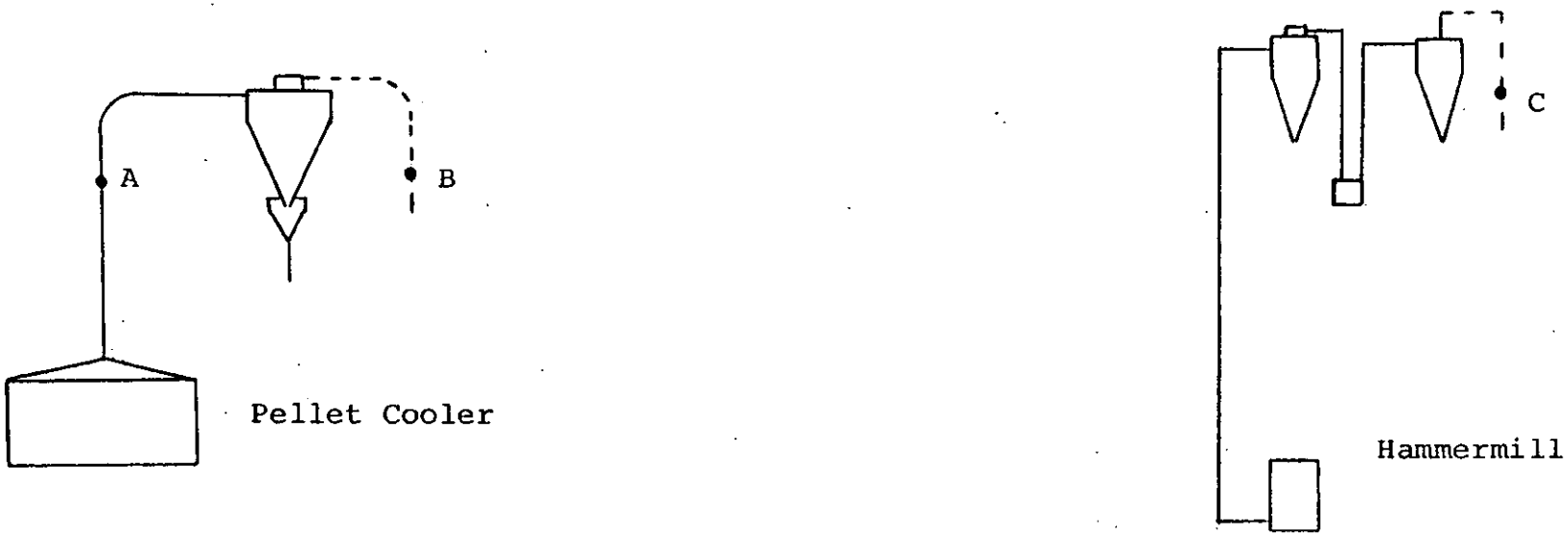

Figure 1. Sampling Sites - Ralston Purina Co., Louisville, Kentucky

III. SUMMARY OF RESULTS

Tables 2 through 6 summarize the stack gas parameters, and the emission,process, and sampling data obtained during this test series. Additional data, calculations, and original field data are included in the Appendices to this report.

Pellet Cooler

Table 2 contains the stack gas and particulate emission data for the pellet cooler at the inlet and outlet of the cyclone serving this operation. The slightly higher gas flows at the outlet site, as compared to the inlet site, are probably due to the leakage of outside air into the duct work around the fan shaft and housing.

Two values are reported for the particulate concentrations and emissions. The value designated as "front" represents the particulate collected in the front half of the sampling train, namely, the probe and filter. The "total" value is the entire amount of particulate collected in the train, namely the front half and the material collected in the impingers. The amount collected in the impingers (organic extract and inorganic residue) amounted to an average of 2% of the total particulate collected at the inlet site and 32% at the outlet.

TABLE 2. PELLET COOLER EMISSION DATA SUMMARY

RALSTON PURINA COMPANY, LOUISVILLE, KENTUCKY

November 6, 1972

			Stack Gas Parameters				Particulate Emissions					
							Concentration Grs./SCF		Pounds/Hour		Pounds/Ton	
Test No.	Time	Site[a]	Velocity FPS	Temp. °F.	Moisture %	Volume[b] SCFM	Front	Total	Front	Total	Front	Total
1	13:30 to	Inlet	57.1	94	2.2	15,495	.3616	.3696	48.019	49.075	4.99	5.10
2	15:45	Outlet	44.5	90	2.5	16,085	.0159	.0250	2.149	3.445	.223	.358
3	16:20 to	Inlet	55.9	92	2.0	15,200	.4074	.4161	53.066	54.197	5.51	5.63
4	18:30	Outlet	44.7	90	1.9	16,167	.0143	.0213	1.976	2.948	.205	.306
5	19:20 to	Inlet	53.3	90	2.2	14,538	.5020	.5083	62.546	63.335	5.80	5.87
6	21:40	Outlet	44.3	86	2.3	16,057	.0128	.0175	1.765	2.409	.164	.223

(a) Inlet and outlet to cyclone collector

(b) Standard cubic feet per minute, dry basis corrected to 70°F. and 29.92 Hg.

TABLE 3. PELLET COOLER PRODUCTION DATA

Run No.	Test No.	Feed Composition, %	Feed Rate, Pounds/Hour
1	1,2	40% Ground Corn 30% Wheat Middlings 5% Minerals 20% Grain By-Products 5% Molasses	19256
2	3,4		
3	5,6	65% Ground Corn 25%-30% Soybean Meal 5% Minerals 2% Animal By-Products	20575[a] 22550[b]

(a) Rate during first hour of a two-hour test.

(b) Rate during second hour; average rate = 21563

TABLE 4. SUMMARY OF LABORATORY RESULTS AND SAMPLING DATA

RALSTON PURINA COMPANY - PELLET COOLER

Test Number	Meter Volume SCFD[a]	Particulate Found, mg		% Isokinetic
		Front	Total	
1	83.246	1950.9	1993.8	107
2	60.883[b]	61.5	98.6	102
3	78.364	2068.9	2113.0	107
4	107.546	99.4	148.3	101
5	78.706	2560.7	2593.0	108
6	110.894	92.2	125.8	104

a) Standard Cubic Feet, Dry Basis Corrected to 70° F and 29.92" Hg.

b) Smaller Sized Sampling Nozzle Used During This Run

TABLE 5. HAMMERMILL EMISSION DATA SUMMARY
RALSTON PURINA COMPANY, LOUISVILLE, KENTUCKY
November 7, 1972

Test No.	Time	Stack Gas Parameters[a]				Particulate Emissions					
		Velocity FPS	Temp. °F.	Moisture %	Volume[b] SCFM	Concentration Grs./SCF		Pounds/Hour		Pounds/Ton	
						Front	Total	Front	Total	Front	Total
7	12:30 to 15:30	52.5	72	1.7	5,316	.0253	.0335	1.151	1.525	.144	.191
8	16:20 to 17:00	57.0	78	1.5	5,713	.0192	.0252	.938	1.234	.117	.154
9	18:30 to 19:40	62.1	76	1.7	6,240	.0153	.0212	.817	1.133	.102	.142

(a) Cyclone Outlet

(b) Standard cubic feet per minute, dry basis corrected to 70°F. and 29.92" Hg.

TABLE 6. SUMMARY OF LABORATORY RESULTS AND SAMPLING DATA

RALSTON PURINA COMPANY - HAMMERMILL CYCLONE OUTLET

Test Number	Meter Volume SCFD[a]	Particulate Found, mg		% Isokinetic
		Front	Total	
7	80.471	131.8	174.6	111
8	46.469	57.7	75.9	115
9	50.419	49.9	69.2	114

a) Standard cubic feet per minute, dry basis corrected to 70°F and 29.92 "Hg.

Table 3 summarizes the pellet composition and production rate for each of the test runs. The first two runs (Test 1, 2, 3 and 4) were essentially identical from a production viewpoint. A dairy feed was produced during the first two runs at an average rate of 9.628 tons per hour. During the third run, two types of turkey feed were produced. The two feeds differed only in the amount of soybean meal, with the feed produced during the second hour of this run containing about 5% more soybean meal. During the switch from one feed to another, sampling was discontinued. The average process rate was 10.7815 tons per hour.

The data in Table 2 show that particulate emissions from the process increased during the three runs. Process weight rates were identical for the first two runs but increased during run 3. The total particulate emitted from the cyclone averaged 0.0212 grains per SCF, 2.934 pounds per hour, and 0.296 pounds per ton of product. Average cyclone efficiency, based on pounds of total particulate was 94.6%. There were no visible emissions from the cyclone outlet. Variations in efficiency are probably due to particle size variations.

Table 4 presents the laboratory results for each run, the volume of gas sampled and the percent of isokinetic sampling rate for each of the six tests on the pellet cooler. Each test extended over approximately a two hour period.

Hammermill

Table 5 presents a summary of stack gas parameters and particulate emission data for the hammermill cyclone outlet sampling site. An average of 1.3 pounds of particulate (0.162 pounds per ton of product) were emitted from this cyclone at a concentration of 0.0266 grains per standard cubic foot. A production rate of 8 tons per hour was maintained during all tests. The opacity was 5% white.

An average of 75% of the particulate matter was found in the front half of the sampling train. Table 6 presents a summary of the sample volumes, laboratory results, and percent of isokinetic sampling rate. Sampling times were two hours for test 7 and 64 minutes each for tests 8 and 9.

This sampling site contained two points which had negative velocity head readings due to the cyclonic nature of the flow. This flow pattern limits the accuracy of the total stack gas flow as measured with a pitot tube.

IV. PROCESS DESCRIPTION

Pellet Cooling

A wide variety of cattle and poultry feeds are manufactured in both checker and pellet form at this plant. In the pelletizing process tested, ingredients are mixed in a batch, and gravity fed to a California Pellet Mill where they are formed into small cylindrical pellets. As shown in Figure 2, the pellets then drop into a double-pass, horizontal cooler through which room air is drawn to cool and partially dry the warm pellets. (California Pellet Mill Co., Model No. 5 HR 34DD, Serial No. 232828). This cooler consists of two continuous perforated belts with an effective width of 34 inches and length of 60 inches. Dust entrained in the cooling air is collected in a Longhorn No. 79 cyclone collector and the cleaned air vented directly to the atmosphere. A 30 horsepower fan operating at 1330 rpm* was mounted at the cyclone outlet.

Fines collected in the cyclone are recycled to the pellet mill.

Hammermill

Whole kernel corn is pulverized by hammermills for use as a basic feed ingredient. A number of hammermills are used at this plant. The unit tested was a Prater, size 9, style GOS (Serial No. 22469), as shown in Figure 3. Cracked kernels

---

* not measured.

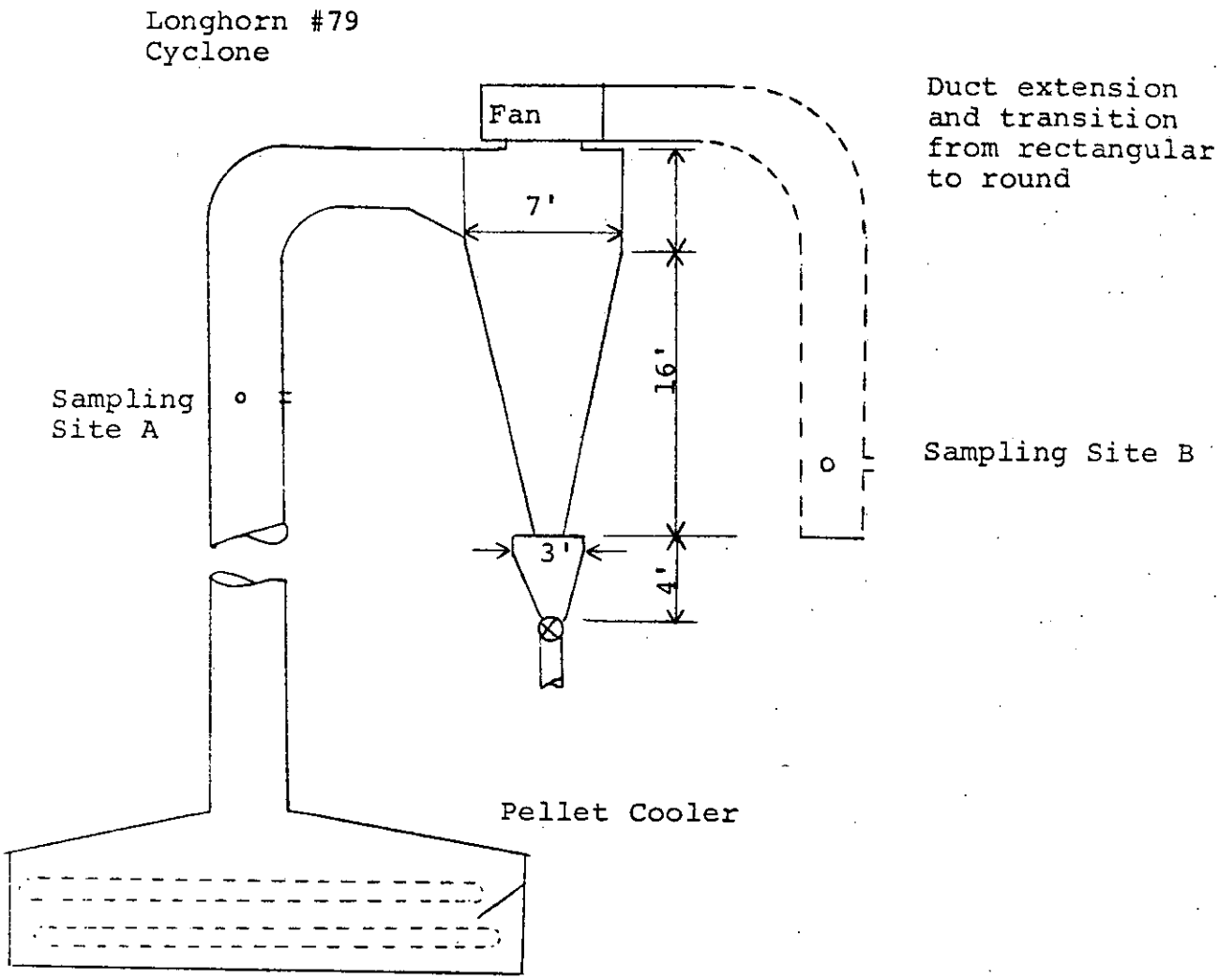

Figure 2. Pellet Cooler

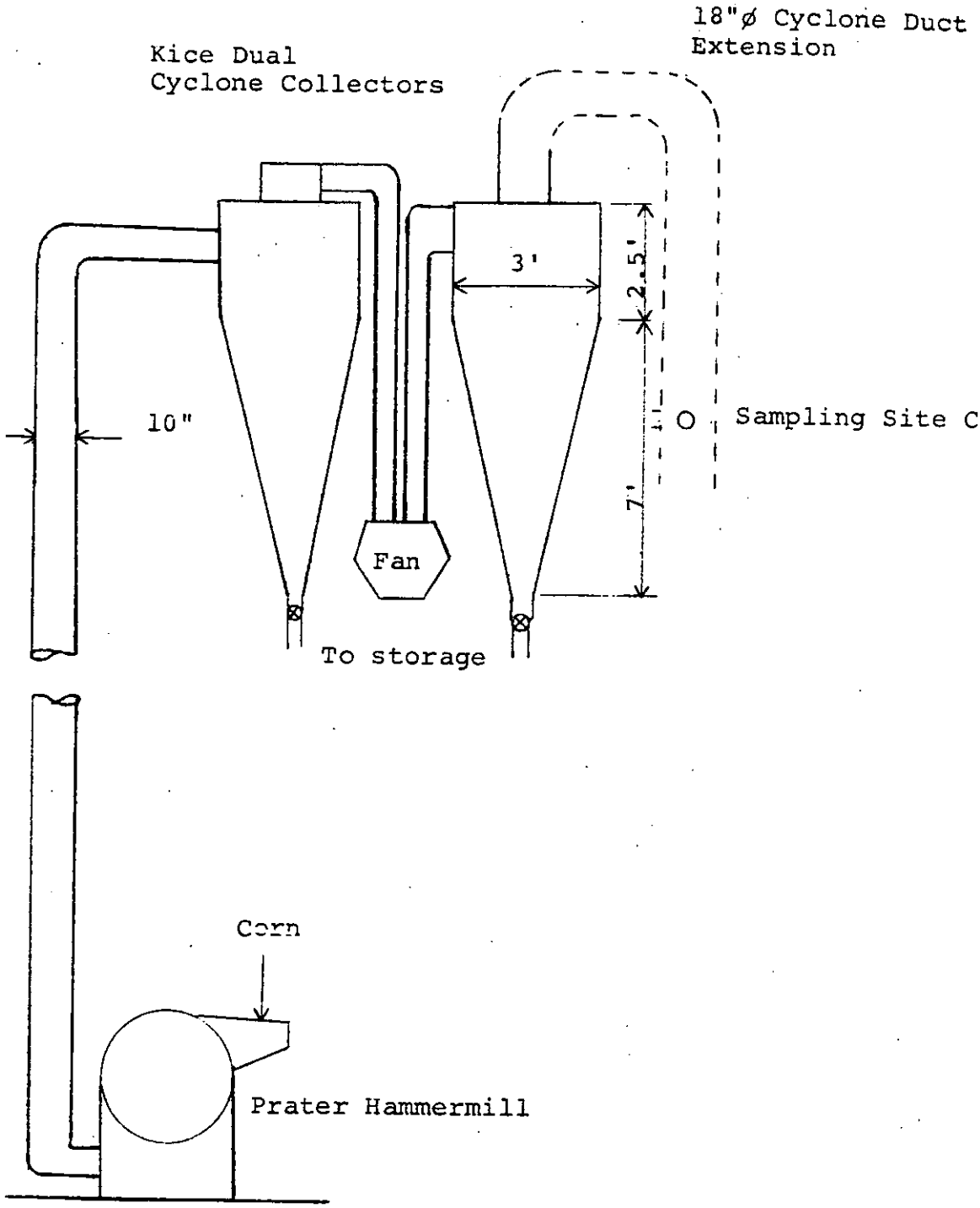

Figure 3. Hammermill System

are then pneumatically conveyed by a 50 horsepower blower to two cyclone collectors mounted in series. The cyclone collection system is a Kice, Model 2 SPW 16-8. The product is collected in the cyclones, and fines are vented to the atmosphere.

V. PROCESS OPERATION

Pellet Cooler

The pellet cooler operated in a normal manner. Feeds were chosen which provided long runs, i.e. about 2.5 hours. The composition of the feeds was previously shown in Table 3. The pellet mill operated at a power input of 130-150 amps during the first run and for 75% of the second run and then dropped off slowly to 110 amps.

The addition of a cyclone extension did not apparently effect the cooling air rate through the unit.

Hammermill

The hammermill operated continually in a normal manner. During each of these tests, Number 2 yellow corn with 2% FM was ground at a steady rate of 8 tons per hour. The hammermill operated at 1800 rpm, and a size 12 screen was used to yield a course grind. A sieve analysis of the ground corn yielded the following data:

Tyler Screen Size	% Retained
8	5.5
24	58.5-65.0
42	85.5-87.5

The addition of the cyclone extension did not apparently affect the air flow through the process.

VI. LOCATION OF SAMPLING POINTS

Figures 4, 5, and 6 show the sampling ports and the number of sampling points at the sites used to determine emissions from these two operations. As shown in Figure 4, the pellet cooler cyclone inlet samples were collected at 32 points (16 along each diameter) in the 30 inch round vertical duct. This port was 5.1 diameters upstream from the bend leading into the cyclone and 5.2 diameters downstream from the transition duct leading from the pellet cooler hood. Figure 5 shows the pellet cooler cyclone outlet sampling site and the 36 traverse points (18 along each diameter) in the 34.5 inch round vertical duct. This port was located in the temporary duct extension and was 3.33 diameters downstream from the transition section and bend (duct changed from rectangular to round), and 0.83 diameters upstream from the duct outlet.

Figure 6 shows the hammermill cyclone outlet site and the 16 points (8 along each diameter) in an 18 inch round vertical duct. The sampling ports were 2 diameters upstream from the duct exit and 4.7 diameters downstream from a bend.

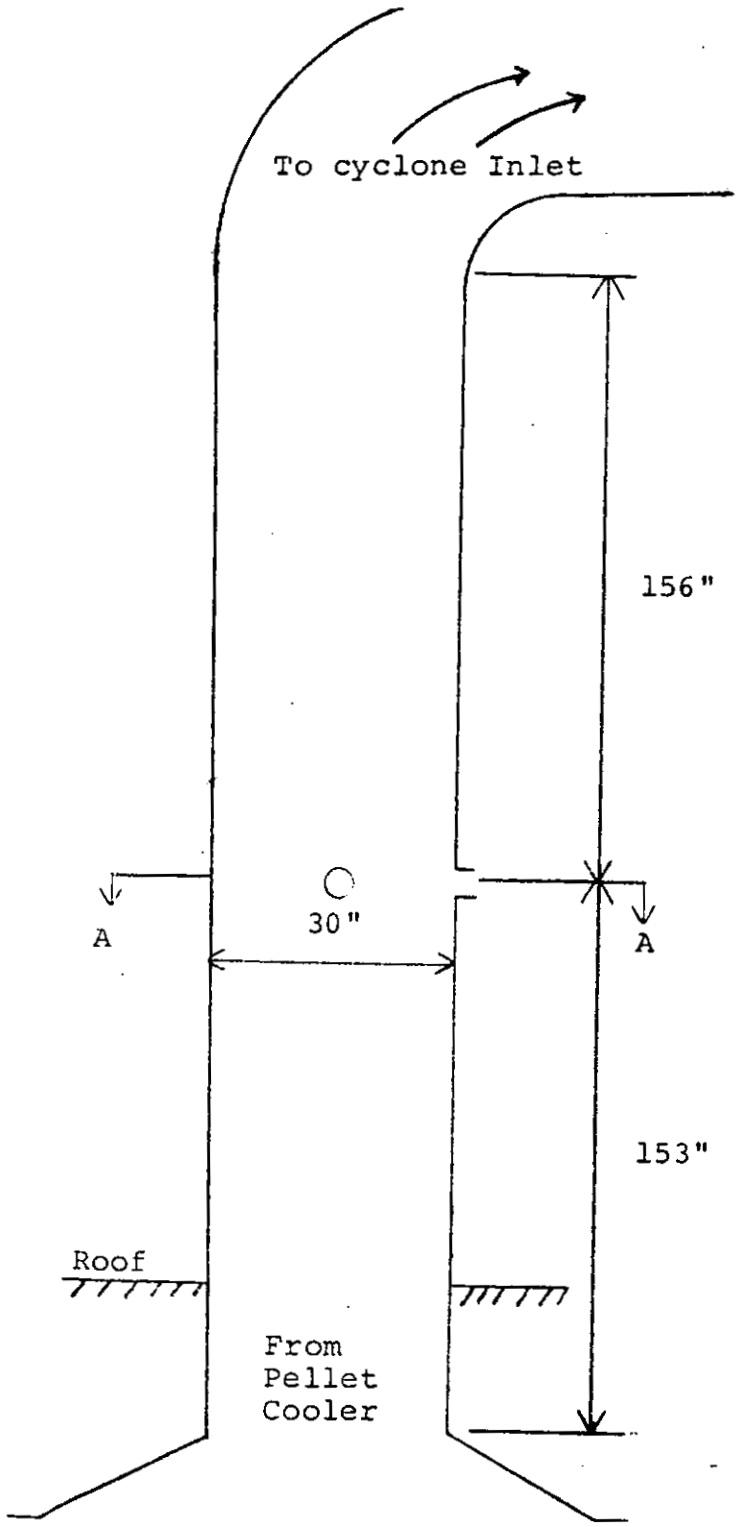

Point	Distance to Traverse Point, In.
1	1.0
2	1.5
3	2.6
4	3.8
5	5.1
6	6.6
7	8.5
8	11.3
9	18.8
10	21.5
11	23.4
12	24.9
13	26.3
14	27.5
15	28.5
16	29.0

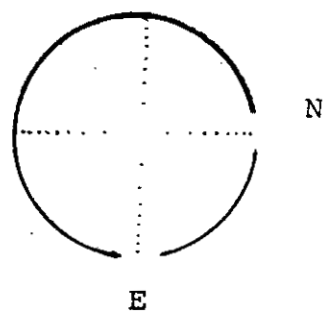

Section AA

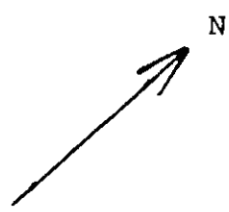

FIGURE 4. PELLET COOLER CYCLONE INLET SAMPLING LOCATION

Point	Distance to Traverse Point, In.
1	1.0
2	1.5
3	2.6
4	3.8
5	5.0
6	6.5
7	8.1
8	10.2
9	13.2
10	21.3
11	24.5
12	26.4
13	28.0
14	29.5
15	30.7
16	31.9
17	33.0
18	33.3

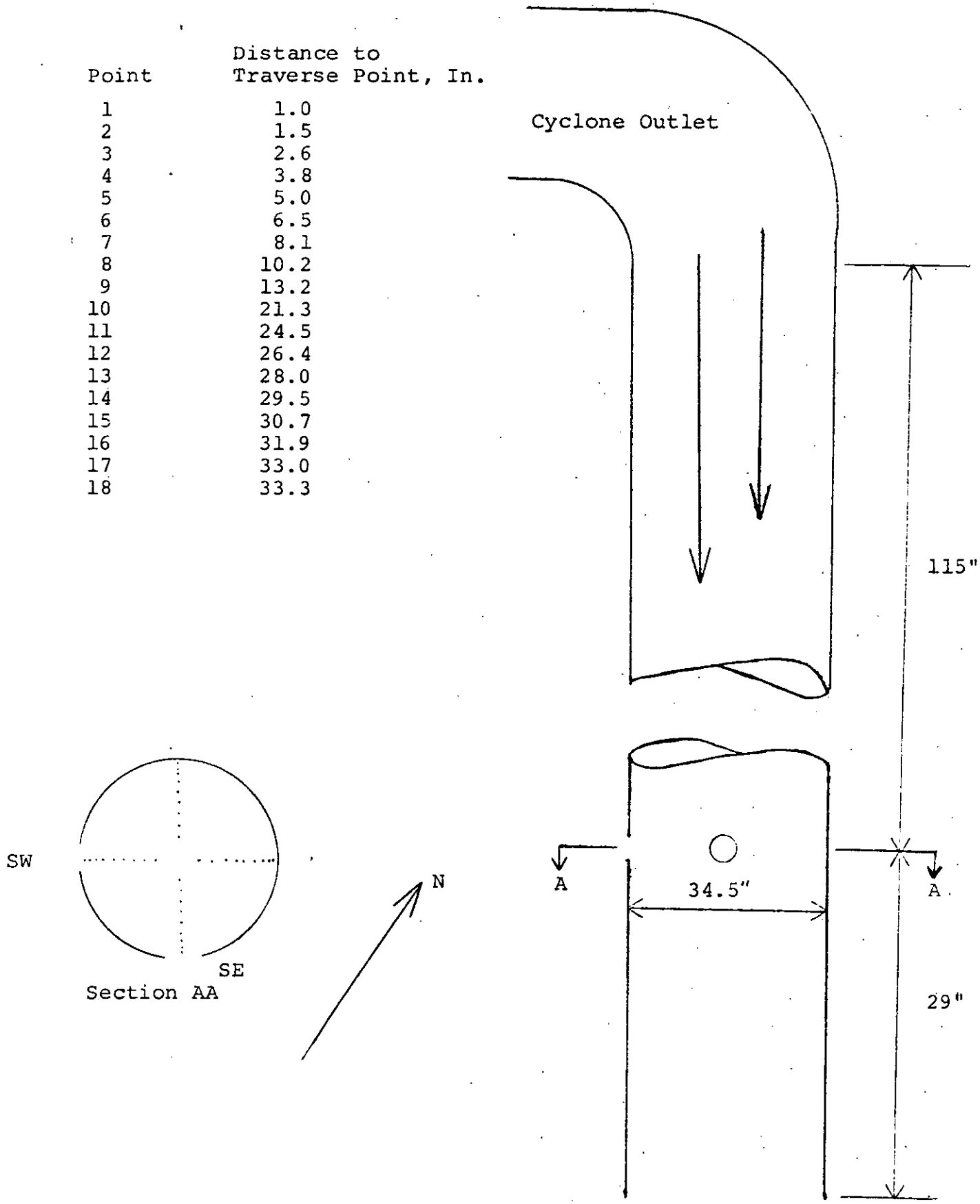

FIGURE 5. PELLET COOLER CYCLONE OUTLET SAMPLING LOCATION

Point	Distance to Traverse Point, In.
1	1.0
2	1.9
3	3.5
4	5.8
5	12.2
6	14.5
7	16.1
8	17.0

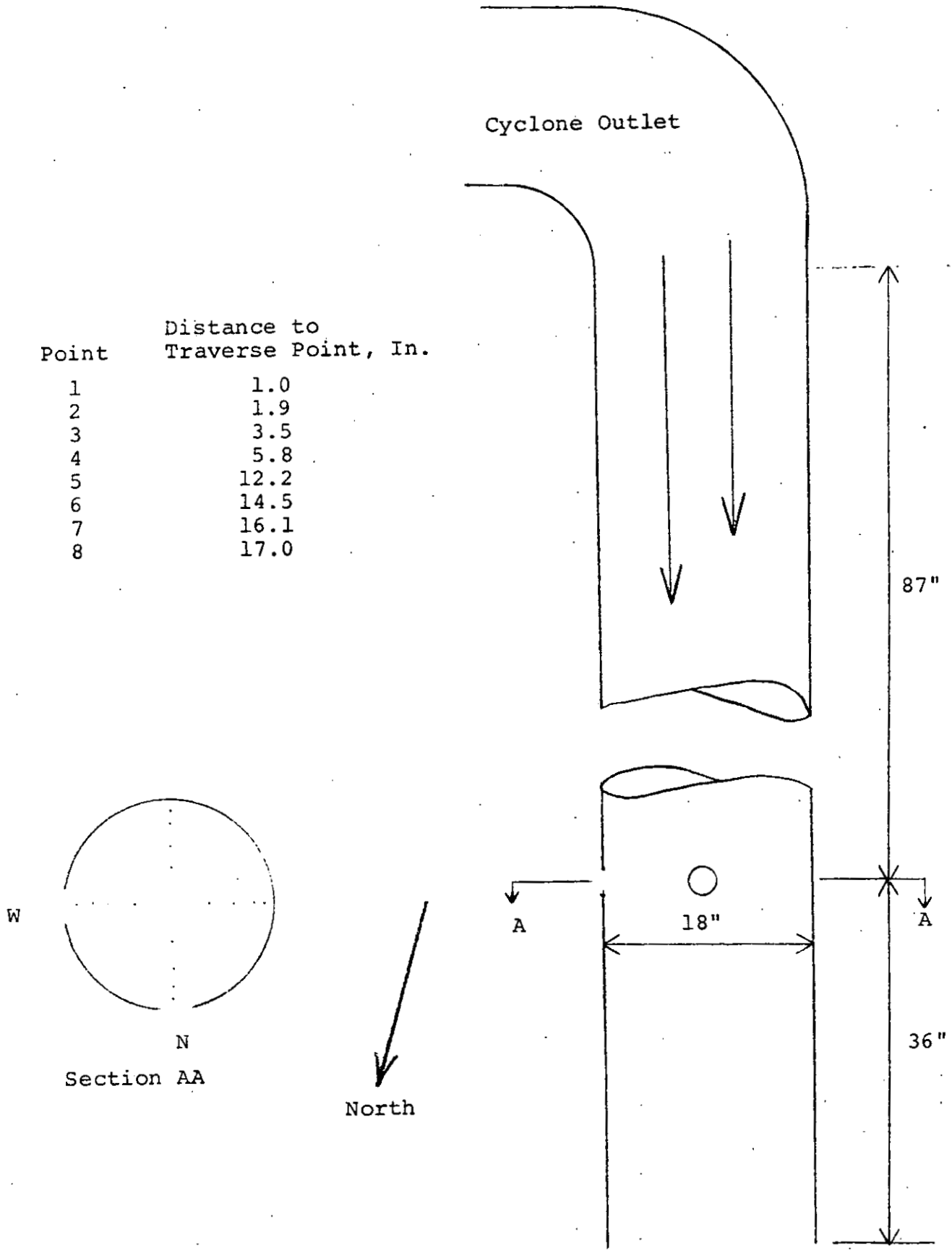

FIGURE 6. HAMMERMILL CYCLONE OUTLET SAMPLING LOCATION

VII. SAMPLING PROCEDURES

All sampling procedures were selected by EPA prior to field sampling. The analysis of collected samples was performed by PEDCo. Original data sheets and associated velocity and sampling volume calculations are included in Appendix D.

Velocity and Gas Temperature

All gas velocities were measured with a type S pitot tube and inclined draft gage. In all cases velocities were measured at each sampling point across the stack diameter to determine an average value according to procedures described in the Federal Register[1] - Method 1. Temperatures were measured by long stem dial thermometers.

Particulates

Method 5 as described in the Federal Register[1] was used to measure particulate matter. A glass lined probe, fiber glass filter, and impingers containing distilled water were used as shown in Figure 7. The fourth impinger contained silica gel. The sampling cyclone was not used except for Test 1. Due to low moisture content and near ambient stack gas temperature, probes and filters were not heated during the tests.

---

1) Federal Register, Vol. 36, No. 247, Part II Dec. 23, 1971

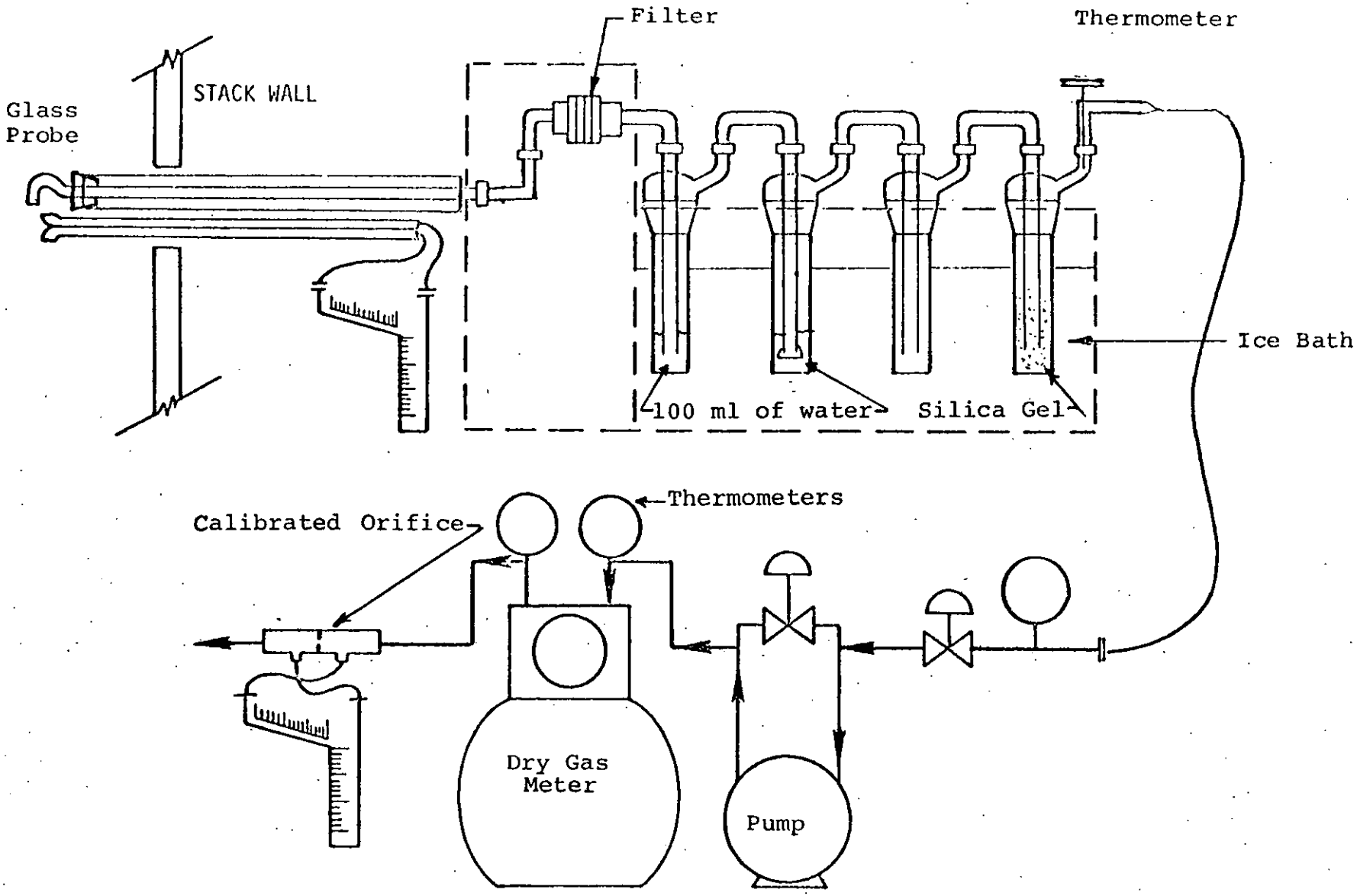

Figure 7. Particulate sampling train.

In all cases sampling was conducted under isokinetic conditions by continually monitoring the velocity with a pitot tube and adjusting the sampling rate accordingly with a three-independent-variable nomograph.

The train cleanup procedure consisted of measuring the water collected and weighing the silica gel to determine moisture content. The water was then poured into a glass jar. The filter was removed and placed in marked container. The probe and front half of the filter holder were then rinsed with analytical reagent grade acetone and the washings placed in a glass container. The rear half of the train consisting of filter holder, impingers, and connectors were rinsed with distilled water and this water added to the impinger contents. The rear half of the train was then rinsed with acetone and placed in a third sample jar. A portion of the acetone and distilled water used in the sample recovery, were set aside and used as blanks for analysis.

Analysis followed the procedures described in Method 5 of the Federal Register of August 17, 1971.[2] This consisted of:

1. Drying the filter in a desiccator at room temperature and weighing.

---

2. Federal Register, Vol. 36 No. 159 Part II, Aug. 17, 1971.

2. Transferring the acetone washings from the probe and front half of the filter holder to a tared beaker and evaporating to dryness at room temperature and weighing.

3. Extracting organics from the impinger water and washings with chloroform and ether. The extracts were placed in a tared beaker and dried at room temperature and then weighed.

4. The remaining water was placed in a tared beaker and evaporated by boiling. The residue was weighed.

5. Transferring the acetone washings from the rear half of the train to a tared beaker, evaporating to dryness at room temperature and weighing.

Appendix A

Particulate Results and Calculations

TEST DATA SUMMARY SHEET

Ralston Purina

City Louisville, Kentucky Test Site Pellet Cooler

Test No.	1	2	3	4
Date 1972	11-6	11-6	11-6	11-6
Time	1320-1536	1340-1548	1625-1830	1620-1832
Meter Volume, C.F.	88.374	66.257	82.529	118.612
ΔH Avg. "H_2O Avg.	1.34	0.62	1.25	1.93
Meter Inlet Temp. °F	104	119	98	130
Meter Outlet Temp. °F	92	103	85	107
Pump Vacuum "Hg	4.9	4.7	7.1	4.7
Filter Temp. °F	N/A	N/A	N/A	N/A
Impinger Temp. °F	65	66	58	71
Test Time, Min.	128	126	123.6	126.0
Barometric Press. "Hg	29.58	29.58	29.45	29.45
Stack Gage Press. "H_2O	-1.20	-0.42	-1.20	-0.42
Stack Gas Temp. °F	94	90	92	90
Stack Area, Ft.^{2}	4.909	6.492	4.909	6.492
Nozzle Size, Inches	0.1875	0.1875	0.1875	0.2500
Molecular Weight	28.76	28.73	28.78	28.79
% Moisture	2.24	2.53	2.05	1.97
Sample Volume SCFD	83.246	60.883	78.364	107.546
Stack Gas Velocity FPS	57.1	44.5	55.9	44.7
Stack Gas Volume SCFM	15,849	16,502	15,518	16,494
Stack Gas Volume SCFMD	15,495	16,085	15,200	16,169
% Isokinetic	107.4	101.7	106.8	100.5
Particulate Found, mg				
Probe	1950.8[3]	61.3	809.5	93.0
Filter	0.1	0.2	1259.4	6.4
Impinger Organics[1]	36.2	28.3	37.8	41.6
Impinger Residue[2]	6.7	8.8	6.3	7.3
Total	1993.8	98.6	2113.0	148.3

1. Sum of ether and chloroform extract, and acetone rinse
2. Residue from evaporation of extracted impinger water
3. Includes cyclone

TEST DATA SUMMARY SHEET

RALSTON PURINA

City Louisville, Kentucky Test Site Pellet Cooler

Test No.	5	6		
Date 1972	11-6	11-6		
Time	1920-2140	1920-2135		
Meter Volume, C.F.	81.735	121.244		
ΔH Avg. "H_2O Avg.	1.13	1.91		
Meter Inlet Temp. °F	92	124		
Meter Outlet Temp. °F	79	101		
Pump Vacuum "Hg	4.0	4.6		
Filter Temp. °F	N/A	N/A		
Impinger Temp. °F	62	77		
Test Time, Min.	128	126		
Barometric Press. "Hg	29.55	29.40		
Stack Gage Press. "H_2O	-1.55	-.42		
Stack Gas Temp. °F	90	86		
Stack Area, Ft.^{2}	4.909	6.492		
Nozzle Size, Inches	0.1875	0.2500		
Molecular Weight	28.75	28.75		
% Moisture	2.27	2.30		
Sample Volume SCFD	78.700	110.894		
Stack Gas Velocity FPS	53.3	44.3		
Stack Gas Volume SCFM	14,876	16,436		
Stack Gas Volume SCFMD	14,538	16,059		
% Isokinetic	108.1	104.3		
Particulate Found, mg				
Probe	2558.4	91.3		
Filter	2.3	0.9		
Impinger Organics	26.4	29.0		
Impinger Residue	5.9	4.6		
Total	2593.0	125.8		

1. Sum of ether and chloroform extract and acetone rinse.
2. Residue from evaporation of extracted impinger water.

TEST DATA SUMMARY SHEET

Ralston Purina

City Louisville, Ky. Test Site Hammermill

Test No.	7	8	9	
Date	11-7	11-7	11-7	
Time	1230-1530	1620-1800	1830-1940	
Meter Volume, C.F.	84.049	49.786	51.758	
ΔH Avg. "H_2O Avg.	1.28	1.39	1.59	
Meter Inlet Temp. °F	91	106	82	
Meter Outlet Temp. °F	73	86	64	
Pump Vacuum "Hg	2.7	4.6	4.0	
Filter Temp. °F	N/A	N/A	N/A	
Impinger Temp. °F	65	62	62	
Test Time, Min.	120.0	64	64	
Barometric Press. "Hg	29.20	29.20	29.20	
Stack Gage Press. "H_2O	-.31	-.27	-.27	
Stack Gas Temp. °F	72	78	76	
Stack Area, Ft.^{2}	1.767	1.767	1.767	
Nozzle Size, Inches	0.1875	0.1875	0.1875	
Molecular Weight	28.81	28.84	28.81	
% Moisture	1.71	1.52	1.76	
Sample Volume SCFD	80.471	46.469	50.419	
Stack Gas Velocity FPS	52.5	57.0	62.1	
Stack Gas Volume SCFM	5409	5800	6352	
Stack Gas Volume SCFMD	5316	5712	6240	
% Isokinetic	111.3	114.7	114.1	
Particulate Found, mg				
Probe	129.2	54.8	49.3	
Filter	2.6	2.9	0.6	
Impinger Organics	37.3	13.0	6.6	
Impinger Residue	5.5	5.2	12.7	
Total	174.6	75.9	69.2	

1. Sum of ether and chloroform extract, and acetone rinse.
2. Residue from evaporation of extracted impinger water.

EXAMPLE CALCULATIONS[a] TEST NO. 1

1. Volume of dry gas sampled at standard conditions = 70°F, 29.92" Hg.

$$V_{m_{std}} = \frac{17.71\, V_m \left(P_B + \frac{P_m}{13.6}\right)}{\left(T_m + 460\right)} = \_\_\_ \text{ SCF}$$

$$V_{m_{std}} = \frac{17.71(88.374)\left(29.58 + \frac{1.34}{13.6}\right)}{\left(98 + 460\right)} = \underline{83.246 \text{ SCF}}$$

2. Volume of water vapor at 70°F & 29.92" Hg, SCF

$$V_{w_{gas}} = 0.0474\, V_w = \_\_\_ \text{ SCF}$$

$$V_{w_{gas}} = 0.0474(40.2) = \underline{1.905 \text{ SCF}}$$

3. % Moisture in stack gas

$$\% \, m = \frac{100 \times V_{w_{gas}}}{V_{m_{std}} + V_{w_{gas}}} = \_\_\_ \%$$

$$\% \, m = \frac{100 \times 1.905}{83.246 + 1.905} = \underline{2.24 \%}$$

a) ALL CALCULATIONS ARE COMPUTERIZED. HAND CALCULATIONS DO NOT ALWAYS AGREE EXACTLY BECAUSE OF ROUNDING OFF ERRORS.

4. Mole fraction of dry gas

$$M_d = \frac{100 - \%M}{100}$$

$$M_d = \frac{100 - 2.2}{100} = \underline{0.978}$$

5. Average molecular weight of dry stack gas

$$MW_d = \left(\%CO_2 \times \frac{44}{100}\right) + \left(\%O_2 \times \frac{32}{100}\right) + \left(\%N_2 \times \frac{28}{100}\right)$$

NOT APPLICABLE

6. Molecular weight of stack gas

$$MW = MW_d \times M_d + 18(1 - M_d)$$

NOT APPLICABLE

7. Stack velocity @ stack conditions, fpm

$$V_s = 4350 \sqrt{\Delta P_s \frac{(T_s + 460)}{(P_s \times MW)}} = \text{fpm}$$

$$V_s = 4350 \sqrt{.9489 \frac{(94 + 460)}{(29.49 \times 28.76)}} = \underline{3426 \text{ FPM}}$$

8. Stack gas volume @ standard conditions, SCFM

$$Q_s = \frac{0.123 \times V_s \times A_s \times M_d \times P_s}{(T_s + 460)} = \text{SCFM}$$

From printout A_s = 4.909 sq. ft.

converting to sq in – $4.909 \text{ ft}^2 \times \frac{144 \text{ in}^2}{\text{ft}^2} = 706.8 \text{ in}^2$

$$Q_s = \frac{0.123(3426)(706.8)(.978)(29.49)}{(94 + 460)} = \underline{15{,}500 \text{ SCFM}}$$

9. % Isokinetic

$$\% I = \frac{1032 (T_s + 460) V_{m_{std}}}{V_s T_t P_s M_d D_n^2} = \%$$

$$\% I = \frac{1032 (94 + 460)(83.246)}{(3426)(128)(29.49)(0.978)(.1875)^2} = \underline{107\%}$$

10. Particulate - probe, cyclone, & filter, gr/scf

$$C_{an} = 0.015432\left(\frac{m_f}{Vm_{std}}\right) = \text{gr/scf}$$

$$C_{an} = 0.015432\left(\frac{1950.9}{83.248}\right) = \underline{.3616 \text{ gr/scf}}$$

11. Particulate - total, gr/SCF

$$C_{ao} = 0.015432\left(\frac{m_t}{Vm_{std}}\right) = \text{gr/SCF}$$

$$C_{ao} = 0.015432\left(\frac{1993.8}{84.648}\right) = \underline{.3696 \text{ gr/SCF}}$$

12. Particulate - probe, cyclone, & filter, gr/SCF. STACK conditions

NOT APPLICABLE

13. Particulate - total, gr/SCF @ stack conditions.

NOT APPLICABLE

14. Particulate - probe, cyclone, & filter, lb/hr

$C_{aw} = 0.00857 \; C_{an} \; Q_s =$ lb/hr

$C_{aw} = 0.00857 \, (0.3616)(15{,}495) = \underline{48.012 \text{ lb/hr}}$

15. Particulate - total, lb/hr

$C_{ax} = 0.00857 \; C_{ao} \; Q_s =$ lb/hr

$C_{ax} = 0.00857 \, (.3696)(15{,}495) = \underline{49.075 \text{ lb/hr}}$

APPENDIX B.

GASEOUS RESULTS

No gaseous emissions were measured during this test series. Air was the only gas flowing in this process system.

APPENDIX D. FIELD DATA

The field data sheets included in this appendix consist of the original data sheets and computer print-outs of these data along with associated calculations for moisture, meter volume, and stack gas flow.

FIELD DATA

PLANT	RALSTON PURINA, LOUISVILLE,KY.	DATE	11/06/72
SAMPLING LOCATION	PELLET COOLER-INLET	RUN NUMBER	1
SAMPLE TYPE	PARTICULATE	PROBE LENGTH AND TYPE	36 INCH GLASS
OPERATOR	R S AMICK	NOZZLE I.D.	.1875
AMBIENT TEMP.(DEG.F)	60	ASSUMED MOISTURE	2
BAR.PRESS.(IN.HG)	29.58	SAMPLE BOX NUMBER	0
STATIC PRESS(IN.H2O)	-1.20	METER BOX NUMBER	6
FILTER NUMBER(S)	200053	METER HEAD DIFF.	1.85
STACK INSIDE DIM(IN)	30.000	C FACTOR	1.1
PITOT TUBE COEFF	.85	PROBE HEATER SETTING	
		HEATER BOX SETTING	
READ AND RECORD DATA EVERY 4	MINUTES	REFERENCE PRESS DIFF.	1.31

TRAVERSE POINT NO.	SAMPLE TIME (MIN.)	CLOCK TIME (24-HR CLOCK)	GAS METER READING (CU.FT.)	VELOCITY HEAD (IN.H2O)	ORIFICE PRESSURE DIFFERENTIAL (IN.H2O) DESIRED	ORIFICE PRESSURE DIFFERENTIAL (IN.H2O) ACTUAL	STACK TEMP (DEG.F)	DRY GAS METER TEMP (DEG.F) INLET	DRY GAS METER TEMP (DEG.F) OUTLET	PUMP VACUUM (IN.HG)	SAMPLE BOX TEMP (DEG.F)	IMPINGER TEMP (DEG.F)
INIT	0	1320	156.680									
N-1	4.		159.123	.650	.94	.94	90	80	80	5.0		70
2	8.0		161.448	.700	.98	.98	90	83	80	5.0		62
3	12.0		163.916	.800	1.15	1.15	90	85	80	5.0		60
4	16.0		166.521	.800	1.15	1.15	90	90	81	5.0		61
5	20.0		168.996	.840	1.16	1.16	90	94	83	5.0		61
6	24.0		171.663	.940	1.30	1.30	90	97	84	5.0		62
7	28.0		174.441	.940	1.30	1.30	94	101	86	5.0		63
8	32.0		177.164	.970	1.35	1.35	93	104	88	5.0		63
9	36.0		180.044	1.100	1.57	1.57	94	106	89	5.0		62
10	40.0		183.114	1.150	1.60	1.60	95	108	91	5.0		63
11	44.0		186.019	1.100	1.57	1.57	95	110	93	5.0		63
12	48.0		188.995	1.100	1.57	1.57	95	111	94	5.0		64
13	52.0		191.954	1.100	1.57	1.57	95	111	94	5.0		67
14	56.0		194.962	1.100	1.57	1.57	94	113	96	5.0		67
15	60.0		197.955	1.100	1.57	1.57	94	114	97	5.0		67
16	64.0		200.896	1.100	1.57	1.57	94	114	97	5.0		68
E-1	68.0	1432	203.000	.540	.75	.75	94	105	97	4.0		66
2	72.0		205.226	.570	.78	.78	94	105	97	4.0		66
3	76.0		207.483	.650	.90	.90	94	106	97	4.0		63
4	80.0		209.854	.670	.91	.91	93	107	97	4.0		64
5	84.0		212.314	.750	.98	.98	95	107	97	4.0		65
6	88.0		214.754	.790	1.08	1.08	97	106	96	4.0		66
7	92.0		217.424	.870	1.18	1.18	97	107	96	4.0		66
8	96.0		220.064	.940	1.30	1.30	97	107	96	5.0		67
9	100.0		223.000	1.100	1.57	1.57	97	108	95	5.0		64
10	104.0		226.041	1.150	1.59	1.59	94	108	95	5.0		64
11	108.0		229.121	1.150	1.59	1.59	94	108	95	5.0		64
12	112.0		232.231	1.200	1.70	1.70	94	108	94	5.3		66
13	116.0		235.496	1.200	1.70	1.70	94	108	94	5.5		67
14	120.0		238.666	1.200	1.70	1.70	95	108	94	5.5		67
15	124.0		241.841	1.200	1.70	1.70	95	108	94	5.5		67
16	128.0	1536	245.054	1.150	1.59	1.59	95	108	94	5.5		67
TOTALS	128.0		88.374									
AVERAGE					1.34	1.34	94	104	92	4.9		65

PLANT RALSTON PURINA, LOUISVILLE, KY.
SAMPLING LOCATION PELLET COOLER-INLET

DATE 11/06/72
RUN NUMBER 1

DRY MOLECULAR WEIGHT DETERMINATION

GAS	VOL. PERCENT DRY BASIS

CO2	
O2	
CO	
N2	
TOTAL	
DRY MOLECULAR WEIGHT, LB/LB-MOLE	29.00

MOISTURE CONTENT DETERMINATION

IMPINGER MOISTURE, ML	16.0
SILICA MOISTURE, ML	24.2
TOTAL MOISTURE, ML	40.2
WATER VAPOR COLLECTED, STD. CU. FT.	1.905
GAS METER VOL., CU. FT.	
GROSS TOTAL	88.374
LESS LEAKAGE CORR	.000
NET TOTAL	88.374
DRY GAS VOL. THROUGH METER, STD. CU. FT	83.246
MOISTURE CONTENT, VOL. FRACTION	.0224

STACK GAS VELOCITY AND VOLUME DETERMINATION

STACK AREA, SQ. FT.	4.909
PITOT TUBE COEFFICIENT	.85
STACK ABS. PRESS., IN. HG	29.49
STACK GAS TEMPERATURE, DEG. F	94
STACK GAS MOL. WT., WET BASIS	28.75
SQRT(VEL HD X STACK TEMP ABS)	22.9
STACK GAS VELOCITY, ACT. FPS	57.1
STACK GAS VOLUME, STD CFM,	
WET BASIS	15849.2
DRY BASIS	15494.5

ISOKINETIC VARIATION

PERCENT OF ISOKINETIC SAMPLING 107.4

FIELD DATA

PLANT	RALSTON PURINA, LOUISVILLE,KY.	DATE	11/06/72
SAMPLING LOCATION	PELLET COOLER-OUTLET	RUN NUMBER	2
SAMPLE TYPE	PARTICULATE	PROBE LENGTH AND TYPE	3 FT GLASS
OPERATOR	G FORTE	NOZZLE I.D.	.1875
AMBIENT TEMP.(DEG.F)	60	ASSUMED MOISTURE	2
BAR.PRESS.(IN.HG)	29.58	SAMPLE BOX NUMBER	0
STATIC PRESS(IN.H2O)	-.42	METER BOX NUMBER	0
FILTER NUMBER(S)	200056	METER HEAD DIFF.	1.40 AT 0.75 SCFM
STACK INSIDE DIM(IN)	34.500	C FACTOR	0.82
PITOT TUBE COEFF	.85	PROBE HEATER SETTING	
		HEATER BOX SETTING	
		REFERENCE PRESS DIFF.	1.78

READ AND RECORD DATA EVERY 3.5 MINUTES

TRAVERSE POINT NO.	SAMPLE TIME (MIN.)	CLOCK TIME (24-HR CLOCK)	GAS METER READING (CU.FT.)	VELOCITY HEAD (IN.H2O)	ORIFICE PRESSURE DIFFERENTIAL (IN.H2O) DESIRED	ORIFICE PRESSURE DIFFERENTIAL (IN.H2O) ACTUAL	STACK TEMP (DEG.F)	DRY GAS METER TEMP (DEG.F) INLET	DRY GAS METER TEMP (DEG.F) OUTLET	PUMP VACUUM (IN.HG)	SAMPLE BOX TEMP (DEG.F)	IMPINGER TEMP (DEG.F)
INIT	0	1340	605.400									60
SE-1	3.5		607.010	.410	.44	.44	87	82	80	3.0		62
2	7.0		608.600	.430	.46	.46	87	84	80	3.0		65
3	10.5		610.180	.430	.46	.46	87	88	80	3.0		65
4	14.0		611.890	.500	.54	.54	87	90	81	4.0		65
5	17.5		613.660	.510	.55	.55	90	95	83	4.0		65
6	21.0		615.460	.540	.58	.58	90	100	86	4.5		65
7	24.5		617.280	.550	.59	.59	90	104	88	4.5		65
8	28.0		619.170	.600	.65	.65	90	108	90	5.0		65
9	31.5		621.110	.630	.67	.67	90	112	92	5.0		65
10	35.0		623.040	.610	.65	.65	90	115	95	5.0		65
11	38.5		625.000	.570	.61	.61	90	118	97	4.5		65
12	42.0		626.790	.570	.61	.61	90	120	99	4.5		65
13	45.5		628.690	.580	.62	.62	90	122	101	4.5		65
14	49.0		630.560	.610	.65	.65	90	124	103	5.0		65
15	52.5		632.520	.630	.67	.67	90	126	104	5.0		65
16	56.0		634.530	.630	.67	.67	90	128	107	5.0		67
17	59.5		636.480	.590	.64	.64	90	128	108	5.0		67
18	63.0		638.332	.610	.65	.65	90	129	109	5.0		67
SW-1	66.5		640.110	.480	.51	.51	90	126	110	4.0		67
2	70.0		641.860	.480	.51	.51	90	126	110	4.0		67
3	73.5		643.600	.490	.53	.53	90	127	110	4.0		67
4	77.0		645.410	.520	.56	.56	90	128	111	4.0		67
5	80.5		647.290	.570	.61	.61	90	128	112	5.0		67
6	84.0		649.180	.570	.61	.61	90	128	112	5.0		67
7	87.5		651.140	.620	.66	.66	90	129	112	5.0		67
8	91.0		653.130	.620	.66	.66	90	129	112	5.0		67
9	94.5		655.180	.670	.72	.72	90	129	112	5.5		67

PLANT: RALSTON PURINA, LOUISVILLE, KY.
SAMPLING LOCATION: PELLET COOLER-OUTLET
DATE: 11/06/72
RUN NUMBER: 2

TRAVERSE POINT NO.	SAMPLE TIME (MIN.)	CLOCK TIME (24-HR CLOCK)	GAS METER READING (CU.FT.)	VELOCITY HEAD (IN.H2O)	ORIFICE PRESSURE DIFFERENTIAL (IN.H2O) DESIRED	ORIFICE PRESSURE DIFFERENTIAL (IN.H2O) ACTUAL	STACK TEMP (DEG.F)	DRY GAS METER TEMP (DEG.F) INLET	DRY GAS METER TEMP (DEG.F) OUTLET	PUMP VACUUM (IN.HG)	SAMPLE BOX TEMP (DEG.F)	IMPINGER TEMP (DEG.F)
10	98.0		657.190	.620	.66	.66	90	129	112	5.5		67
11	101.5		659.170	.620	.66	.66	90	129	112	5.5		67
12	105.0		661.150	.620	.66	.66	90	129	112	5.5		67
13	108.5		663.150	.630	.67	.67	90	130	113	5.0		67
14	112.0		665.220	.670	.72	.72	90	130	113	5.5		67
15	115.5		667.310	.680	.73	.73	90	130	113	5.5		67
16	119.0		669.430	.700	.75	.75	90	130	113	5.5		67
17	122.5		671.540	.700	.75	.75	90	130	113	5.5		67
18	126.0	1548	671.657	.710	.76	.76	90	130	113	5.5		67
TOTALS	126.0		66.257									
AVERAGE					.62	.62	90	119	103	4.7		66

PLANT	RALSTON PURINA, LOUISVILLE,KY.	DATE	11/06/72
SAMPLING LOCATION	PELLET COOLER-OUTLET	RUN NUMBER	2

DRY MOLECULAR WEIGHT DETERMINATION

GAS	VOL. PERCENT DRY BASIS
CO2	
O2	
CO	
N2	
TOTAL	

DRY MOLECULAR WEIGHT,LB/LB-MOLE 29.00

MOISTURE CONTENT DETERMINATION

IMPINGER MOISTURE,ML	10.0
SILICA MOISTURE,ML	23.3
TOTAL MOISTURE,ML	33.3
WATER VAPOR COLLECTED, STD. CU. FT.	1.578
GAS METER VOL.,CU.FT.	
GROSS TOTAL	66.257
LESS LEAKAGE CORR	.000
NET TOTAL	66.257
DRY GAS VOL. THROUGH METER,STD. CU. FT	60.883
MOISTURE CONTENT, VOL. FRACTION	.0253

STACK GAS VELOCITY AND VOLUME DETERMINATION

STACK AREA,SQ. FT.	6.492
PITOT TUBE COEFFICIENT	.85
STACK ABS.PRESS.,IN.HG	29.54
STACK GAS TEMPERATURE,DEG.F	90
STACK GAS MOL. WT.,WET BASIS	28.72
SQRT(VEL HD X STACK TEMP ABS)	17.9
STACK GAS VELOCITY, ACT. FPS	44.5
STACK GAS VOLUME,STD CFM,	
WET BASIS	16501.7
DRY BASIS	16084.7

ISOKINETIC VARIATION

PERCENT OF ISOKINETIC SAMPLING	101.7

FIELD DATA

PLANT	RALSTON PURINA, LOUISVILLE,KY.	DATE	11/06/72
SAMPLING LOCATION	PELLET COOLER-INLET	RUN NUMBER	3
SAMPLE TYPE	PARTICULATE	PROBE LENGTH AND TYPE	4 FT GLASS
OPERATOR	R S AMICK	NOZZLE I.D.	.1875
AMBIENT TEMP.(DEG.F)	60	ASSUMED MOISTURE	2
BAR.PRESS.(IN.HG)	29.45	SAMPLE BOX NUMBER	0
STATIC PRESS(IN.H2O)	-1.20	METER BOX NUMBER	6
FILTER NUMBER(S)	200055	METER HEAD DIFF.	1.85 AT 0.75 SCFM
STACK INSIDE DIM(IN)	30.000	C FACTOR	1.10
PITOT TUBE COEFF	.85	PROBE HEATER SETTING	
		HEATER BOX SETTING	
READ AND RECORD DATA EVERY 4	MINUTES	REFERENCE PRESS DIFF.	1.31

TRAVERSE POINT NO.	SAMPLE TIME (MIN.)	CLOCK TIME (24-HR CLOCK)	GAS METER READING (CU.FT.)	VELOCITY HEAD (IN.H2O)	ORIFICE PRESSURE DIFFERENTIAL (IN.H2O) DESIRED	ORIFICE PRESSURE DIFFERENTIAL (IN.H2O) ACTUAL	STACK TEMP (DEG.F)	DRY GAS METER TEMP (DEG.F) INLET	DRY GAS METER TEMP (DEG.F) OUTLET	PUMP VACUUM (IN.HG)	SAMPLE BOX TEMP (DEG.F)	IMPINGER TEMP (DEG.F)
INIT	0	1625	245.908									
N-1	4.0		248.094	.570	.81	.81	96	82	82	5.0		65
2	8.0		250.354	.640	.88	.88	96	88	82	5.3		57
3	12.0		252.632	.640	.88	.88	96	91	82	5.5		56
4	16.0		254.196	.680	.95	.95	94	94	83	6.0		56
5	20.0		257.419	.720	.98	.98	95	96	84	6.0		57
6	24.0		259.750	.750	1.02	1.02	97	97	84	6.0		57
7	28.0		261.916	.800	1.09	1.09	96	98	85	6.0		57
8	32.0		264.751	.880	1.22	1.22	94	99	85	7.0		57
9	36.0		267.530	.980	1.38	1.38	90	101	86	9.0		57
10	40.0		270.564	1.200	1.65	1.65	90	102	86	9.0		57
11	44.0		273.700	1.200	1.65	1.65	90	103	86	9.0		57
12	48.0		276.811	1.200	1.65	1.65	90	103	86	9.0		57
13	52.0		279.970	1.200	1.65	1.65	90	103	86	9.0		58
14	56.0		283.144	1.200	1.65	1.65	90	103	86	9.0		58
15	60.0		286.084	1.200	1.65	1.65	90	102	86	9.0		58
16	64.0		288.859	.950	1.30	1.30	90	101	85	9.0		58
E-1	68.0		291.116	.650	.91	.91	90	89	84	5.5		58
2	72.0		293.530	.740	.98	.98	90	91	84	5.5		58
3	76.0		295.999	.760	1.05	1.05	90	93	84	6.0		59
4	80.0		298.491	.800	1.10	1.10	92	96	84	6.0		60
5	84.0		301.052	.880	1.18	1.18	92	97	84	7.0		58
6	88.0		303.812	.900	1.20	1.20	92	98	84	7.0		58
7	92.0		306.314	.950	1.29	1.29	90	99	85	7.0		58
8	96.0		309.419	.980	1.30	1.30	90	100	85	7.0		58
9	100.0		311.887	.980	1.30	1.30	90	100	85	7.0		59
10	104.0		314.644	1.000	1.32	1.32	90	100	85	7.0		59
11	108.0		317.249	1.000	1.32	1.32	90	100	85	7.0		60
12	112.0		320.333	1.000	1.32	1.32	90	101	85	7.0		60
13	116.0		323.060	1.000	1.32	1.32	90	102	86	7.0		60
14	120.0		325.875	1.000	1.32	1.32	90	102	86	7.0		60
15	123.6		328.437	1.000	1.32	1.32	90	102	86	7.0		61
TOTALS	123.6		82.529									
AVERAGE					1.25	1.25	92	98	85	7.1		58

PLANT RALSTON PURINA, LOUISVILLE, KY.
SAMPLING LOCATION PELLET COOLER-INLET

DATE 11/06/72
RUN NUMBER 3

DRY MOLECULAR WEIGHT DETERMINATION

GAS	VOL. PERCENT DRY BASIS

CO2	
O2	
CO	
N2	
TOTAL	
DRY MOLECULAR WEIGHT, LB/LB-MOLE	29.00

MOISTURE CONTENT DETERMINATION

IMPINGER MOISTURE, ML	18.0
SILICA MOISTURE, ML	16.6
TOTAL MOISTURE, ML	34.6
WATER VAPOR COLLECTED, STD. CU. FT.	1.640
GAS METER VOL., CU.FT.	
GROSS TOTAL	82.529
LESS LEAKAGE CORR	.000
NET TOTAL	82.529
DRY GAS VOL. THROUGH METER, STD. CU. FT	78.364
MOISTURE CONTENT, VOL. FRACTION	.0205

STACK GAS VELOCITY AND VOLUME DETERMINATION

STACK AREA, SQ. FT.	4.909
PITOT TUBE COEFFICIENT	.85
STACK ABS.PRESS., IN.HG	29.36
STACK GAS TEMPERATURE, DEG.F	92
STACK GAS MOL. WT., WET BASIS	28.77
SQRT(VEL HD X STACK TEMP ABS)	22.4
STACK GAS VELOCITY, ACT. FPS	55.9
STACK GAS VOLUME, STD CFM,	
WET BASIS	15517.6
DRY BASIS	15199.5

ISOKINETIC VARIATION

PERCENT OF ISOKINETIC SAMPLING	106.8

FIELD DATA

PLANT	RALSTON PURINA, LOUISVILLE,KY.	DATE	11/06/72
SAMPLING LOCATION	PELLET COOLER-OUTLET	RUN NUMBER	4
SAMPLE TYPE	PARTICULATE	PROBE LENGTH AND TYPE	4 FT GLASS
OPERATOR	G FORTE	NOZZLE I.D.	.2500
AMBIENT TEMP.(DEG.F)	50	ASSUMED MOISTURE	2
BAR.PRESS.(IN.HG)	29.45	SAMPLE BOX NUMBER	0
STATIC PRESS(IN.H2O)	-.42	METER BOX NUMBER	0
FILTER NUMBER(S)	200054	METER HEAD DIFF.	1.40 AT 0.75 SCFM
STACK INSIDE DIM(IN)	34.500	C FACTOR	0.82
PITOT TUBE COEFF	.85	PROBE HEATER SETTING	
		HEATER BOX SETTING	
READ AND RECORD DATA EVERY 3.5 MINUTES		REFERENCE PRESS DIFF.	1.78

TRAVERSE POINT NO.	SAMPLE TIME (MIN.)	CLOCK TIME (24-HR CLOCK)	GAS METER READING (CU.FT.)	VELOCITY HEAD (IN.H2O)	ORIFICE PRESSURE DIFFERENTIAL (IN.H2O) DESIRED	ORIFICE PRESSURE DIFFERENTIAL (IN.H2O) ACTUAL	STACK TEMP (DEG.F)	DRY GAS METER TEMP (DEG.F) INLET	DRY GAS METER TEMP (DEG.F) OUTLET	PUMP VACUUM (IN.HG)	SAMPLE BOX TEMP (DEG.F)	IMPINGER TEMP (DEG.F)
INIT	0	1620	673.742									
SE-1	3.5		676.550	.430	1.43	1.43	90	104	95	4.0		82
2	7.0		679.290	.410	1.35	1.35	90	.08	95	4.0		82
3	10.5		682.090	.430	1.43	1.43	90	108	95	4.0		82
4	14.0		685.010	.510	1.70	1.70	90	110	95	4.5		82
5	17.5		688.180	.540	1.80	1.80	90	115	96	4.5		84
6	21.0		690.890	.550	1.82	1.82	90	120	98	4.5		84
7	24.5		694.570	.570	1.89	1.89	90	122	99	4.5		84
8	28.0		697.930	.610	2.00	2.00	90	126	100	5.0		84
9	31.5		701.300	.640	2.10	2.10	90	128	102	5.0		84
10	35.0		704.650	.580	1.92	1.92	90	130	104	5.0		78
11	38.5		707.990	.600	1.98	1.98	90	131	104	5.0		78
12	42.0		711.290	.600	1.98	1.98	90	132	105	5.0		72
13	45.5		714.620	.620	2.02	2.02	90	133	107	5.0		72
14	49.0		718.160	.660	2.18	2.18	90	134	108	5.5		70
15	52.5		721.710	.680	2.20	2.20	90	135	108	5.5		66
16	56.0		725.250	.680	2.20	2.20	90	136	109	5.5		65
17	59.5		728.720	.650	2.15	2.15	90	136	110	5.0		65
18	63.0		732.093	.600	1.98	1.98	90	136	110	5.0		65
SW-1	66.5		735.320	.540	1.80	1.80	90	132	110	4.0		63
2	70.0		738.540	.570	1.89	1.89	90	131	110	4.5		63
3	73.5		741.840	.580	1.92	1.92	90	131	110	4.5		63
4	77.0		745.410	.600	1.98	1.98	90	132	110	5.0		63
5	80.5		748.470	.620	2.02	2.02	90	134	110	5.0		65
6	84.0		752.010	.610	2.00	2.00	90	134	110	5.0		65
7	87.5		755.320	.610	2.00	2.00	90	135	111	5.0		65
8	91.0		758.760	.600	1.98	1.98	90	135	111	5.0		65
9	94.5		762.110	.590	1.95	1.95	90	135	112	4.5		65

PLANT RALSTON PURINA, LOUISVILLE, KY. DATE 11/06/72

SAMPLING LOCATION PELLET COOLER-OUTLET RUN NUMBER 4

TRAVERSE POINT NO.	SAMPLE TIME (MIN.)	CLOCK TIME (24-HR CLOCK)	GAS METER READING (CU.FT.)	VELOCITY HEAD (IN.H2O)	ORIFICE PRESSURE DIFFERENTIAL (IN.H2O) DESIRED	ORIFICE PRESSURE DIFFERENTIAL (IN.H2O) ACTUAL	STACK TEMP (DEG.F)	DRY GAS METER TEMP (DEG.F) INLET	DRY GAS METER TEMP (DEG.F) OUTLET	PUMP VACUUM (IN.HG)	SAMPLE BOX TEMP (DEG.F)	IMPINGER TEMP (DEG.F)
10	98.0		765.420	.580	1.92	1.92	90	135	112	4.5		65
11	101.5		768.770	.580	1.92	1.92	90	135	112	4.5		65
12	105.0		772.070	.580	1.92	1.92	90	136	112	4.5		65
13	108.5		775.390	.590	1.95	1.95	90	136	112	4.5		65
14	112.0		778.830	.600	1.98	1.98	90	136	112	4.5		65
15	115.5		782.240	.620	2.02	2.02	90	136	112	4.5		65
16	119.0		785.610	.630	2.05	2.05	90	136	112	4.5		65
17	122.5		788.990	.600	1.98	1.98	90	136	112	4.5		65
18	126.0	1832	792.354	.580	1.92	1.92	90	136	112	4.5		65
TOTALS	126.0		118.612									
AVERAGE					1.93	1.93	90	130	107	4.7		71

PLANT: RALSTON PURINA, LOUISVILLE, KY.
SAMPLING LOCATION: PELLET COOLER-OUTLET

DATE: 11/06/72
RUN NUMBER: 4

DRY MOLECULAR WEIGHT DETERMINATION

GAS	VOL. PERCENT DRY BASIS
CO2	
O2	
CO	
N2	
TOTAL	
DRY MOLECULAR WEIGHT, LB/LB-MOLE	29.00

MOISTURE CONTENT DETERMINATION

IMPINGER MOISTURE, ML	12.0
SILICA MOISTURE, ML	33.6
TOTAL MOISTURE, ML	45.6
WATER VAPOR COLLECTED, STD. CU. FT.	2.161
GAS METER VOL., CU. FT.	
GROSS TOTAL	118.612
LESS LEAKAGE CORR	.000
NET TOTAL	118.612
DRY GAS VOL. THROUGH METER, STD. CU. FT	107.546
MOISTURE CONTENT, VOL. FRACTION	.0197

STACK GAS VELOCITY AND VOLUME DETERMINATION

STACK AREA, SQ. FT.	6.492
PITOT TUBE COEFFICIENT	.85
STACK ABS. PRESS., IN. HG	29.41
STACK GAS TEMPERATURE, DEG. F	90
STACK GAS MOL. WT., WET BASIS	28.78
SQRT(VEL HD X STACK TEMP ABS)	17.9
STACK GAS VELOCITY, ACT. FPS	44.7
STACK GAS VOLUME, STD CFM,	
WET BASIS	16493.6
DRY BASIS	16168.6

ISOKINETIC VARIATION

PERCENT OF ISOKINETIC SAMPLING	100.5

FIELD DATA

PLANT	RALSTON PURINA, LOUISVILLE,KY.	DATE	11/06/72
SAMPLING LOCATION	PELLET COOLER-INLET	RUN NUMBER	5
SAMPLE TYPE	PARTICULATE	PROBE LENGTH AND TYPE	36 FT GLASS
OPERATOR	R S AMICK	NOZZLE I.D.	.1875
AMBIENT TEMP.(DEG.F)	50	ASSUMED MOISTURE	2
BAR.PRESS.(IN.HG)	29.55	SAMPLE BOX NUMBER	0
STATIC PRESS(IN.H2O)	-1.55	METER BOX NUMBER	6
FILTER NUMBER(S)	200060	METER HEAD DIFF.	1.85 AT 0.75 SCFM
STACK INSIDE DIM(IN)	30.000	C FACTOR	
PITOT TUBE COEFF	.85	PROBE HEATER SETTING	
		HEATER BOX SETTING	
		REFERENCE PRESS DIFF.	1.31

READ AND RECORD DATA EVERY 4 MINUTES

TRAVERSE POINT NO.	SAMPLE TIME (MIN.)	CLOCK TIME (24-HR CLOCK)	GAS METER READING (CU.FT.)	VELOCITY HEAD (IN.H2O)	ORIFICE PRESSURE DIFFERENTIAL (IN.H2O) DESIRED	ORIFICE PRESSURE DIFFERENTIAL (IN.H2O) ACTUAL	STACK TEMP (DEG.F)	DRY GAS METER TEMP (DEG.F) INLET	DRY GAS METER TEMP (DEG.F) OUTLET	PUMP VACUUM (IN.HG)	SAMPLE BOX TEMP (DEG.F)	IMPINGER TEMP (DEG.F)
INIT	0	1920	328.627	.680	.97	.97	90	76	74	4.0		60
E-1	4.0		331.124	.700	.98	.98	90	78	74	4.0		60
2	8.0		333.454	.750	1.00	1.00	90	80	74	4.0		58
3	12.0		335.860	.820	1.10	1.10	92	87	76	4.0		60
4	16.0		338.299	.820	1.10	1.10	92	90	76	4.0		61
5	20.0		340.821	.820	1.10	1.10	92	92	77	4.0		61
6	24.0		343.341	.820	1.10	1.10	92	93	77	4.0		60
7	28.0		345.921	.850	1.11	1.11	93	94	79	4.0		60
8	32.0		348.600	.850	1.11	1.11	92	94	80	4.0		60
9	36.0		351.050	.870	1.18	1.18	91	95	80	4.0		60
10	40.0		353.674	.870	1.18	1.18	90	96	80	4.5		61
11	44.0		356.111	.880	1.19	1.19	91	96	81	4.5		62
12	48.0		358.962	.880	1.19	1.19	90	96	81	4.5		63
13	52.0		361.664	.910	1.20	1.20	90	96	82	4.0		65
14	56.0		364.271	.930	1.28	1.28	90	96	82	4.0		65
15	60.0		366.944	.950	1.30	1.30	90	97	82	4.0		65
16	64.0	2024	369.673	.680	.92	.92	90	82	78	4.0		65
N-1	68.0		372.108	.680	.92	.92	90	85	78	4.0		65
2	72.0		374.217	.630	.87	.87	90	87	79	4.0		66
3	76.0		376.517	.770	1.05	1.05	90	91	79	4.0		66
4	80.0		378.946	.750	1.03	1.03	90	92	80	4.0		66
5	84.0		381.400	.770	1.05	1.05	90	93	80	4.0		60
6	88.0		383.900	.800	1.12	1.12	90	93	80	4.0		61
7	92.0		386.514	.820	1.13	1.13	90	94	80	4.0		61
8	96.0		388.938	.900	1.25	1.25	90	94	81	4.0		62
9	100.0		391.584	.930	1.28	1.28	90	94	81	4.0		63
10	104.0		394.296	.910	1.22	1.22	90	94	81	4.0		63
11	108.0		396.500	.910	1.22	1.22	90	95	81	4.0		64
12	112.0		399.673	.910	1.22	1.22	90	96	82	4.0		64
13	116.0		402.710	.910	1.22	1.22	90	96	82	4.0		64
14	120.0		405.020	.910	1.22	1.22	90	96	82	4.0		68
15	124.0		407.721	.860	1.20	1.20	90	96	82	4.0		
16	128.0	2140	410.362									
TOTALS	128.0		81.735		1.13	1.13	90	92	79	4.0		62
AVERAGE												

PLANT RALSTON PURINA, LOUISVILLE, KY.
SAMPLING LOCATION PELLET COOLER-INLET

DATE 11/06/72
RUN NUMBER 5

DRY MOLECULAR WEIGHT DETERMINATION

GAS	VOL. PERCENT DRY BASIS
CO2	
O2	
CO	
N2	
TOTAL	
DRY MOLECULAR WEIGHT, LB/LB-MOLE	29.00

MOISTURE CONTENT DETERMINATION

IMPINGER MOISTURE, ML	12.0
SILICA MOISTURE, ML	26.6
TOTAL MOISTURE, ML	38.6
WATER VAPOR COLLECTED, STD. CU. FT.	1.830
GAS METER VOL., CU. FT.	
GROSS TOTAL	81.735
LESS LEAKAGE CORR	.000
NET TOTAL	81.735
DRY GAS VOL. THROUGH METER, STD. CU. FT	78.706
MOISTURE CONTENT, VOL. FRACTION	.0227

STACK GAS VELOCITY AND VOLUME DETERMINATION

STACK AREA, SQ. FT.	4.909
PITOT TUBE COEFFICIENT	.85
STACK ABS. PRESS., IN. HG	29.43
STACK GAS TEMPERATURE, DEG. F	90
STACK GAS MOL. WT., WET BASIS	28.75
SQRT(VEL HD X STACK TEMP ABS)	21.3
STACK GAS VELOCITY, ACT. FPS	53.3
STACK GAS VOLUME, STD CFM, WET BASIS	14875.9
DRY BASIS	14537.9

ISOKINETIC VARIATION

PERCENT OF ISOKINETIC SAMPLING 108.3

FIELD DATA

PLANT	RALSTON PURINA, LOUISVILLE,KY.	DATE	11/06/72
SAMPLING LOCATION	PELLET COOLER-OUTLET	RUN NUMBER	6
SAMPLE TYPE	PARTICULATE	PROBE LENGTH AND TYPE	3 FT GLASS
OPERATOR	G FORTE	NOZZLE I.D.	.2500
AMBIENT TEMP.(DEG.F)	50	ASSUMED MOISTURE	2
BAR.PRESS.(IN.HG)	29.40	SAMPLE BOX NUMBER	0
STATIC PRESS(IN.H2O)	-.42	METER BOX NUMBER	0
FILTER NUMBER(S)	200058	METER HEAD DIFF.	1.40 AT 0.75 SCFM
STACK INSIDE DIM(IN)	34.500	C FACTOR	0.82
PITOT TUBE COEFF	.85	PROBE HEATER SETTING	
		HEATER BOX SETTING	
READ AND RECORD DATA EVERY 3.5 MINUTES		REFERENCE PRESS DIFF.	

TRAVERSE POINT NO.	SAMPLE TIME (MIN.)	CLOCK TIME (24-HR CLOCK)	GAS METER READING (CU.FT.)	VELOCITY HEAD (IN.H2O)	ORIFICE PRESSURE DIFFERENTIAL (IN.H2O) DESIRED	ORIFICE PRESSURE DIFFERENTIAL (IN.H2O) ACTUAL	STACK TEMP (DEG.F)	DRY GAS METER TEMP (DEG.F) INLET	DRY GAS METER TEMP (DEG.F) OUTLET	PUMP VACUUM (IN.HG)	SAMPLE BOX TEMP (DEG.F)	IMPINGER TEMP (DEG.F)
INIT	0	1920	793.144									
SE-1	3.5		795.940	.440	1.45	1.45	90	96	94	4.0		70
2	7.0		798.710	.400	1.35	1.35	90	98	94	4.0		70
3	10.5		801.560	.490	1.62	1.62	90	102	94	4.0		75
4	14.0		804.530	.490	1.62	1.62	90	106	92	4.0		75
5	17.5		807.610	.530	1.75	1.75	90	110	92	4.0		75
6	21.0		810.750	.540	1.80	1.80	90	114	92	4.0		75
7	24.5		813.980	.570	1.89	1.89	90	116	93	4.5		75
8	28.0		817.320	.610	2.00	2.00	90	119	95	5.0		78
9	31.5		820.730	.640	2.10	2.10	90	120	96	5.0		78
10	35.0		824.160	.620	2.05	2.05	85	123	98	5.0		78
11	38.5		827.480	.620	2.05	2.05	85	124	98	5.0		78
12	42.0		830.840	.630	2.08	2.08	85	126	100	5.0		78
13	45.5		834.280	.630	2.08	2.08	85	127	101	5.0		78
14	49.0		837.770	.640	2.10	2.10	85	128	101	5.0		78
15	52.5		841.490	.670	2.20	2.20	85	129	102	5.0		78
16	56.0		844.990	.710	2.35	2.35	85	130	103	5.5		78
17	59.5		848.700	.710	2.35	2.35	85	130	103	5.5		78
18	63.0		852.417	.740	2.40	2.40	85	131	103	5.5		80
SW-1	66.5		858.850	.460	1.55	1.55	85	128	105	4.0		80
2	70.0		861.440	.460	1.55	1.55	85	129	105	4.0		80
3	73.5		864.450	.470	1.56	1.56	85	130	105	4.0		80
4	77.0		867.310	.470	1.56	1.56	85	128	104	4.0		80
5	80.5		870.210	.460	1.55	1.55	85	126	104	4.0		80
6	84.0		873.210	.460	1.55	1.55	85	124	104	4.0		77
7	87.5		876.230	.480	1.60	1.60	85	125	104	4.0		77
8	91.0		879.300	.500	1.65	1.65	85	125	104	4.0		77
9	94.5		882.540	.550	1.82	1.82	85	126	105	4.5		77

PLANT RALSTON PURINA, LOUISVILLE, KY. DATE 11/06/72

SAMPLING LOCATION PELLET COOLER-OUTLET RUN NUMBER 6

TRAVERSE POINT NO.	SAMPLE TIME (MIN.)	CLOCK TIME (24-HR CLOCK)	GAS METER READING (CU.FT.)	VELOCITY HEAD (IN.H2O)	ORIFICE PRESSURE DIFFERENTIAL (IN.H2O) DESIRED	ORIFICE PRESSURE DIFFERENTIAL (IN.H2O) ACTUAL	STACK TEMP (DEG.F.)	DRY GAS METER TEMP (DEG.F) INLET	DRY GAS METER TEMP (DEG.F) OUTLET	PUMP VACUUM (IN.HG)	SAMPLE BOX TEMP (DEG.F)	IMPINGER TEMP (DEG.F)
10	98.0		885.800	.600	2.00	2.00	85	127	106	4.5		77
11	101.5		889.310	.620	2.02	2.02	85	129	104	5.0		77
12	105.0		892.870	.620	2.02	2.02	85	129	104	5.0		77
13	108.5		896.380	.630	2.10	2.10	85	131	106	5.0		77
14	112.0		899.950	.650	2.15	2.15	85	132	106	5.0		77
15	115.5		903.470	.650	2.15	2.15	85	132	106	5.0		77
16	119.0		907.180	.670	2.20	2.20	85	134	107	5.0		77
17	122.5		910.850	.690	2.25	2.25	85	134	107	5.0		77
18	126.0	2135	914.388	.700	2.30	2.30	85	134	107	5.0		77
TOTALS	126.0		121.244									
AVERAGE					1.91	1.91	86	124	101	4.6		77

PLANT RALSTON PURINA, LOUISVILLE, KY.
SAMPLING LOCATION PELLET COOLER-OUTLET

DATE 11/06/72
RUN NUMBER 6

DRY MOLECULAR WEIGHT DETERMINATION

GAS	VOL. PERCENT DRY BASIS

CO2	
O2	
CO	
N2	
TOTAL	
DRY MOLECULAR WEIGHT, LB/LB-MOLE	29.00

MOISTURE CONTENT DETERMINATION

IMPINGER MOISTURE, ML	5.0
SILICA MOISTURE, ML	50.0
TOTAL MOISTURE, ML	55.0
WATER VAPOR COLLECTED, STD. CU. FT.	2.607
GAS METER VOL., CU.FT.	
GROSS TOTAL	121.244
LESS LEAKAGE CORR	.000
NET TOTAL	121.244
DRY GAS VOL. THROUGH METER, STD. CU. FT	110.894
MOISTURE CONTENT, VOL. FRACTION	.0230

STACK GAS VELOCITY AND VOLUME DETERMINATION

STACK AREA, SQ. FT.	6.492
PITOT TUBE COEFFICIENT	.85
STACK ABS.PRESS., IN.HG	29.36
STACK GAS TEMPERATURE, DEG.F	86
STACK GAS MOL. WT., WET BASIS	28.75
SQRT(VEL HD X STACK TEMP ABS)	17.7
STACK GAS VELOCITY, ACT. FPS	44.3
STACK GAS VOLUME, STD CFM, WET BASIS	16436.1
DRY BASIS	16058.6

ISOKINETIC VARIATION

PERCENT OF ISOKINETIC SAMPLING 104.3

FIELD DATA

PLANT	RALSTON PURINA, LOUISVILLE,KY.	DATE	11/07/72
SAMPLING LOCATION	HAMMERMILL OUTLET	RUN NUMBER	7
SAMPLE TYPE	PARTICULATE	PROBE LENGTH AND TYPE	24 INCH GLASS
OPERATOR	R AMICK	NOZZLE I.D.	.1875
AMBIENT TEMP.(DEG.F)	60	ASSUMED MOISTURE	2
BAR.PRESS.(IN.HG)	29.20	SAMPLE BOX NUMBER	0
STATIC PRESS(IN.H2O)	-.31	METER BOX NUMBER	0
FILTER NUMBER(S)	200059	METER HEAD DIFF.	1.40 AT 0.75 SCFM
STACK INSIDE DIM(IN)	18.000	C FACTOR	0.86
PITOT TUBE COEFF	.85	PROBE HEATER SETTING	
		HEATER BOX SETTING	
READ AND RECORD DATA EVERY 7.5 MINUTES		REFERENCE PRESS DIFF.	1.65

TRAVERSE POINT NO.	SAMPLE TIME (MIN.)	CLOCK TIME (24-HR CLOCK)	GAS METER READING (CU.FT.)	VELOCITY HEAD (IN.H2O)	ORIFICE PRESSURE DIFFERENTIAL (IN.H2O) DESIRED	ORIFICE PRESSURE DIFFERENTIAL (IN.H2O) ACTUAL	STACK TEMP (DEG.F)	DRY GAS METER TEMP (DEG.F) INLET	DRY GAS METER TEMP (DEG.F) OUTLET	PUMP VACUUM (IN.HG)	SAMPLE BOX TEMP (DEG.F)	IMPINGER TEMP (DEG.F)
INIT	0		914.549									
N-1	7.5	1230	920.846	1.100	1.25	1.25	70	62	62	3.0		65
2	15.0		926.541	1.100	1.25	1.25	70	81	64	3.0		65
3	22.5		931.714	.970	1.18	1.18	70	92	70	3.0		65
4	30.0		936.164	.650	.75	.75	70	95	74	3.0		65
5	37.5		936.164	-.100			70	92	78	.0		65
6	45.0		941.085	.700	.82	.82	70	98	80	2.0		66
7	52.5		946.999	1.600	1.80	1.80	70	103	80	3.0		63
8	60.0	1330	954.495	1.600	1.80	1.80	70	107	83	3.0		62
W-1	67.5	1430	961.503	1.400	1.62	1.62	70	60	60	4.0		62
2	75.0		967.454	1.200	1.36	1.38	70	83	64	3.0		65
3	82.5		973.421	1.200	1.38	1.38	70	80	69	3.0		65
4	90.0		978.141	.750	.87	.87	70	96	76	3.0		66
5	97.5		978.141	-.100			70			.0		
6	105.0		984.586	1.300	1.48	1.48	80	96	76	3.0		67
7	112.5		991.283	1.700	1.95	1.95	80	106	80	4.0		66
8	120.0		998.598	1.500	1.68	1.68	80	112	85	4.0		67
TOTALS	120.0		84.049									
AVERAGE					1.37	1.37	72	91	73	2.7		65

PLANT RALSTON PURINA, LOUISVILLE, KY.
SAMPLING LOCATION HAMMERMILL OUTLET

DATE 11/07/72
RUN NUMBER 7

DRY MOLECULAR WEIGHT DETERMINATION

GAS	VOL. PERCENT DRY BASIS
CO2	
O2	
CO	
N2	
TOTAL	
DRY MOLECULAR WEIGHT, LB/LB-MOLE	29.00

MOISTURE CONTENT DETERMINATION

IMPINGER MOISTURE, ML	.0
SILICA MOISTURE, ML	29.6
TOTAL MOISTURE, ML	29.6
WATER VAPOR COLLECTED, STD. CU. FT.	1.403
GAS METER VOL., CU.FT.	
GROSS TOTAL	84.049
LESS LEAKAGE CORR	.000
NET TOTAL	84.049
DRY GAS VOL. THROUGH METER, STD. CU. FT	80.471
MOISTURE CONTENT, VOL. FRACTION	.0171

STACK GAS VELOCITY AND VOLUME DETERMINATION

STACK AREA, SQ. FT.	1.767
PITOT TUBE COEFFICIENT	.85
STACK ABS. PRESS., IN.HG	29.17
STACK GAS TEMPERATURE, DEG.F	72
STACK GAS MOL. WT., WET BASIS	28.81
SQRT(VEL HD X STACK TEMP ABS)	21.0
STACK GAS VELOCITY, ACT. FPS	52.5
STACK GAS VOLUME, STD CFM,	
WET BASIS	5408.8
DRY BASIS	5316.1
ISOKINETIC VARIATION	(111.3)*
PERCENT OF ISOKINETIC SAMPLING	116.2

* Value computed when negative velocities are assumed to be zero

FIELD DATA

PLANT	RALSTON PURINA, LOUISVILLE,KY.	DATE	11/07/72
SAMPLING LOCATION	HAMMERMILL-OUTLET	RUN NUMBER	8
SAMPLE TYPE	PARTICULATE	PROBE LENGTH AND TYPE	24 FT
OPERATOR	R S AMICK	NOZZLE I.D.	.1875
AMBIENT TEMP.(DEG.F)	50	ASSUMED MOISTURE	2
BAR.PRESS.(IN.HG)	29.20	SAMPLE BOX NUMBER	0
STATIC PRESS(IN.H2O)	-.27	METER BOX NUMBER	0
FILTER NUMBER(S)	200061	METER HEAD DIFF.	1.40 AT 0.75 SCFM
STACK INSIDE DIM(IN)	18.000	C FACTOR	0.86
PITOT TUBE COEFF	.85	PROBE HEATER SETTING	
		HEATER BOX SETTING	
READ AND RECORD DATA EVERY 4	MINUTES	REFERENCE PRESS DIFF.	1.65

TRAVERSE POINT NO.	SAMPLE TIME (MIN.)	CLOCK TIME (24-HR CLOCK)	GAS METER READING (CU.FT.)	VELOCITY HEAD (IN.H2O)	ORIFICE PRESSURE DIFFERENTIAL (IN.H2O) DESIRED	ORIFICE PRESSURE DIFFERENTIAL (IN.H2O) ACTUAL	STACK TEMP (DEG.F)	DRY GAS METER TEMP (DEG.F) INLET	DRY GAS METER TEMP (DEG.F) OUTLET	PUMP VACUUM (IN.HG)	SAMPLE BOX TEMP (DEG.F)	IMPINGER TEMP (DEG.F)
INIT	0	1620	998.866									
N-1	4.0		2.380	1.400	1.60	1.60	80	96	85	4.0		60
2	8.0		5.724	1.400	1.60	1.60	80	102	85	4.0		61
3	12.0		8.654	.350	.41	.41	80	103	86	4.0		60
4	16.0		10.673	.410	.49	.49	80	104	87	4.0		60
5	20.0		12.544	.430	.52	.52	80	106	88	4.0		60
6	24.0		15.614	1.500	1.70	1.70	80	109	88	4.0		60
7	28.0		19.085	1.700	1.95	1.95	80	116	89	5.0		60
8	32.0	1652	21.862	1.700	1.95	1.95	80	118	90	5.0		60
W-1	36.0		26.544	1.300	1.52	1.52	76	104	88	5.0		62
2	40.0		30.085	1.500	1.70	1.70	76	106	87	5.0		63
3	44.0		33.361	1.100	1.27	1.27	76	110	87	5.0		64
4	48.0		35.999	.480	.56	.56	77	113	86	5.0		65
5	52.0		35.999	-.100			76			.0		
6	56.0		40.454	1.300	1.52	1.52	76	102	84	6.0		65
7	60.0		44.321	1.750	2.00	2.00	77	102	83	7.0		65
8	64.0	1700	48.652	1.800	2.05	2.05	76	103	83	7.0		65
TOTALS	64.0		49.786									
AVERAGE					1.39	1.39	78	106	86	4.6		62

PLANT	RALSTON PURINA, LOUISVILLE,KY,	DATE	11/07/72
SAMPLING LOCATION	HAMMERMILL-OUTLET	RUN NUMBER	8

DRY MOLECULAR WEIGHT DETERMINATION

GAS	VOL. PERCENT DRY BASIS
CO2	
O2	
CO	
N2	
TOTAL	
DRY MOLECULAR WEIGHT,LB/LB-MOLE	29.00

MOISTURE CONTENT DETERMINATION

IMPINGER MOISTURE,ML	.0
SILICA MOISTURE,ML	15.1
TOTAL MOISTURE,ML	15.1
WATER VAPOR COLLECTED, STD. CU. FT.	.716
GAS METER VOL.,CU.FT.	
GROSS TOTAL	49.786
LESS LEAKAGE CORR	.000
NET TOTAL	49.786
DRY GAS VOL. THROUGH METER,STD. CU. FT	46.469
MOISTURE CONTENT, VOL. FRACTION	.0152

STACK GAS VELOCITY AND VOLUME DETERMINATION

STACK AREA,SQ. FT.	1.767
PITOT TUBE COEFFICIENT	.85
STACK ABS.PRESS.,IN.HG	29.18
STACK GAS TEMPERATURE,DEG.F	78
STACK GAS MOL. WT.,WET BASIS	28.83
SQRT(VEL HD X STACK TEMP ABS)	22.7
STACK GAS VELOCITY, ACT. FPS	57.0
STACK GAS VOLUME,STD CFM,	
WET BASIS	5800.5
DRY BASIS	5712.5
ISOKINETIC VARIATION	(114.7)*
PERCENT OF ISOKINETIC SAMPLING	117.1

* Value computed when negative velocities are assumed to be zero

FIELD DATA

PLANT	RALSTON PURINA, LOUISVILLE, KY.	DATE	11/07/72
SAMPLING LOCATION	HAMMERMILL OUTLET	RUN NUMBER	9
SAMPLE TYPE	PARTICULATE	PROBE LENGTH AND TYPE	24 INCH GLASS
OPERATOR	R S AMICK	NOZZLE I.D.	.1875
AMBIENT TEMP.(DEG.F)	57	ASSUMED MOISTURE	2
BAR.PRESS.(IN.HG)	29.20	SAMPLE BOX NUMBER	0
STATIC PRESS(IN.H2O)	-.27	METER BOX NUMBER	0
FILTER NUMBER(S)	200062	METER HEAD DIFF.	1.40 AT 0.75 SCFM
STACK INSIDE DIM(IN)	18.000	C FACTOR	0.86
PITOT TUBE COEFF	.85	PROBE HEATER SETTING	
		HEATER BOX SETTING	
		REFERENCE PRESS DIFF.	1.65

READ AND RECORD DATA EVERY 4 MINUTES

TRAVERSE POINT NO.	SAMPLE TIME (MIN.)	CLOCK TIME (24-HR CLOCK)	GAS METER READING (CU.FT.)	VELOCITY HEAD (IN.H2O)	ORIFICE PRESSURE DIFFERENTIAL (IN.H2O) DESIRED	ORIFICE PRESSURE DIFFERENTIAL (IN.H2O) ACTUAL	STACK TEMP (DEG.F)	DRY GAS METER TEMP. (DEG.F) INLET	DRY GAS METER TEMP. (DEG.F) OUTLET	PUMP VACUUM (IN.HG)	SAMPLE BOX TEMP (DEG.F)	IMPINGER TEMP (DEG.F)
INIT	0	1830	48.778									60
W-1	4.0		52.111	1.500	1.75	1.75	74	55	55	4.0		60
2	8.0		55.864	1.300	1.50	1.50	74	70	57	4.0		61
3	12.0		58.971	1.300	1.50	1.50	76	76	58	4.0		61
4	16.0		61.741	.900	1.05	1.05	75	78	60	4.0		
5	20.0		61.741	-.100			75			.0		60
6	24.0		65.653	1.000	1.12	1.12	76	83	61	5.0		59
7	28.0		69.520	1.850	2.18	2.18	77	86	63	5.0		59
8	32.0		73.476	1.850	2.18	2.18	77	88	64	6.0		61
N-1	36.0		77.124	1.600	1.90	1.90	77					62
2	40.0		80.946	1.600	1.90	1.90	76	79	66			62
3	44.0		83.811	1.000	1.12	1.12	76	83	67			63
4	48.0		86.941	1.000	1.12	1.12	75	87	68			65
5	52.0		89.811	1.000	1.12	1.12	75	88	68			65
6	56.0		93.999	1.800	2.00	2.00	76	89	68			65
7	60.0		96.923	1.400	1.65	1.65	77	91	69			64
8	64.0	1940	100.536	1.500	1.75	1.75	77	92	70			
TOTALS	64.0		51.758									62
AVERAGE					1.59	1.59	76	82	64	4.0		

PLANT RALSTON PURINA, LOUISVILLE, KY.
SAMPLING LOCATION HAMMERMILL OUTLET

DATE 11/07/72
RUN NUMBER 9

DRY MOLECULAR WEIGHT DETERMINATION

GAS	VOL. PERCENT DRY BASIS
CO2	
O2	
CO	
N2	
TOTAL	
DRY MOLECULAR WEIGHT, LB/LB-MOLE	29.00

MOISTURE CONTENT DETERMINATION

IMPINGER MOISTURE, ML	.0
SILICA MOISTURE, ML	19.1
TOTAL MOISTURE, ML	19.1
WATER VAPOR COLLECTED, STD. CU. FT.	.905
GAS METER VOL., CU. FT.	
GROSS TOTAL	51.758
LESS LEAKAGE CORR	.000
NET TOTAL	51.758
DRY GAS VOL. THROUGH METER, STD. CU. FT	50.419
MOISTURE CONTENT, VOL. FRACTION	.0176

STACK GAS VELOCITY AND VOLUME DETERMINATION

STACK AREA, SQ. FT.	1.767
PITOT TUBE COEFFICIENT	.85
STACK ABS. PRESS., IN. HG	29.18
STACK GAS TEMPERATURE, DEG. F	76
STACK GAS MOL. WT., WET BASIS	28.81
SQRT(VEL HD X STACK TEMP ABS)	24.8
STACK GAS VELOCITY, ACT. FPS	62.1
STACK GAS VOLUME, STD CFM, WET BASIS	6352.3
STACK GAS VOLUME, STD CFM, DRY BASIS	6240.3
ISOKINETIC VARIATION	(114.1)*
PERCENT OF ISOKINETIC SAMPLING	116.3

*Value computed when negative velocities are assumed to be zero

PLANT RALSTON PURINA
DATE 6 NOV. 72
SAMPLING LOCATION PELLET COOLER - INLET
SAMPLE TYPE PARTICULATE
RUN NUMBER 1
OPERATOR R.S. AMICK
AMBIENT TEMPERATURE 60
BAROMETRIC PRESSURE ~~30.08~~ 29.58
STATIC PRESSURE, (P_s) -1.2
FILTER NUMBER(s) 200053
STACK DIMEN. 30" I.D.
PITOT TUBE "S" TYPE

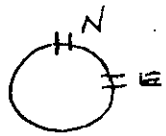

PROBE LENGTH AND TYPE 36" Glass
NOZZLE I.D. .1875
ASSUMED MOISTURE, % 2
SAMPLE BOX NUMBER —
METER BOX NUMBER 6
METER $\Delta H_@$ 1.85
C FACTOR 1.1
PROBE HEATER SETTING N.A.
HEATER BOX SETTING N.A.
REFERENCE Δp ~~[illegible]~~ 1.31

SCHEMATIC OF TRAVERSE POINT LAYOUT

READ AND RECORD ALL DATA EVERY 40 MINUTES

7 8 9 10	11 12 13 14	15 16 17 18	19 20 21 22 23 24	25 26 27 28 29	30 31 32 33	34 35 36 37	38 39 40 41	42 43 44	45 46 47	48 49 50 51	52 53 54	55 56 57
TRAVERSE POINT NUMBER	SAMPLING TIME, min	CLOCK TIME (24 hr CLOCK)	GAS METER READING (V_m), ft^3	VELOCITY HEAD (Δp_s), in. H_2O	ORIFICE PRESSURE DIFFERENTIAL (ΔH), in. H_2O DESIRED	ORIFICE PRESSURE DIFFERENTIAL (ΔH), in. H_2O ACTUAL	STACK TEMPERATURE (T_s), °F	DRY GAS METER TEMPERATURE INLET ($T_{m_{in}}$), °F	DRY GAS METER TEMPERATURE OUTLET ($T_{m_{out}}$), °F	PUMP VACUUM, in. Hg	SAMPLE BOX TEMPERATURE °F	IMPINGER TEMPERATURE °F
	0	1320	156.680									
N-1	4.0		159.123	.650	.94	.94	90	80	80	5.0	N/A	70
2	8.		161.448	.700	.98	.98	90	83	80	5.0		62
3	12.		163.916	[illegible]	1.15	1.15	90	85	80	5.0		60
4	16.		166.521	.800	1.15	1.15	90	90	81	5.0		61
5	20.		168.996	.840	1.16	1.16	90	94	83	5.0		61
6	24.		171.663	.940	1.30	1.30	90	97	84	5.0		62
7	28.		174.441	.940	1.30	1.30	94	101	86	5.0		63
8	32.		177.164	.970	1.35	1.35	93	104	88	5.0		63
9	36.		180.044	1.100	1.57	1.57	94	106	89	5.0		62
10	40.		183.114	1.150	1.60	1.60	95	108	91	5.0		63
11	44.		186.019	1.100	1.57	1.57	95	110	93	5.0		63
12	48.		188.995	1.100	1.57	1.57	95	111	94	5.0		64
13	52.		191.954	1.100	1.57	1.57	95	111	94	5.0		67
14	56.		194.962	1.100	1.57	1.57	94	113	96	5.0		67
15	60.		197.955	1.100	1.57	1.57	94	114	97	5.0		67
16	64.		200.896	1.100	1.57	1.57	94	114	97	5.0		68
	.	1432	.	.	.	.				.		
E-1	68.		203.000	.540	.75	.75	94	105	97	4.0		66
2	72.		205.226	.570	.78	.78	94	105	97	4.0		66
3	76.		207.483	.650	.90	.90	94	106	97	4.0		63
4	80.		209.854	.670	.91	.91	93	107	97	4.0		64
5	84.		212.314	.750	.98	.98	95	107	97	4.0		65
6	88.		214.754	.790	1.08	1.08	97	106	96	4.0		66

LEAKAGE @ 15 "Hg = 0 CFM

GAS METER COR = 0.0

PEDCo - ENVIRONMENTA
SUITE 8 • ATKINSON SQUARE
CINCINNATI, OHIO 45246

PLANT RALSTON RURINA
DATE 6 NOV. 72
SAMPLING LOCATION PELLET COOLER INLET
SAMPLE TYPE PARTICULATE
RUN NUMBER 1
OPERATOR
AMBIENT TEMPERATURE
BAROMETRIC PRESSURE
STATIC PRESSURE, (P_s)
FILTER NUMBER(s)
STACK DIMEN.
PITOT TUBE

PROBE LENGTH AND TYPE
NOZZLE I.D.
ASSUMED MOISTURE, %
SAMPLE BOX NUMBER
METER BOX NUMBER
METER $\Delta H_@$
C FACTOR
PROBE HEATER SETTING
HEATER BOX SETTING
REFERENCE Δp

SCHEMATIC OF TRAVERSE POINT LAYOUT

READ AND RECORD ALL DATA EVERY 40 MINUTES

7 8 9 10	11 12 13 14	15 16 17 18	19 20 21 22 23 24	25 26 27 28 29	30 31 32 33	34 35 36 37	38 39 40 41	42 43 44	45 46 47	48 49 50 51	52 53 54	55 56 57
TRAVERSE POINT NUMBER	SAMPLING TIME, min	CLOCK TIME (24 hr CLOCK)	GAS METER READING (V_m), ft^3	VELOCITY HEAD (Δp_s), in. H_2O	ORIFICE PRESSURE DIFFERENTIAL (ΔH), in. H_2O DESIRED	ORIFICE PRESSURE DIFFERENTIAL (ΔH), in. H_2O ACTUAL	STACK TEMPERATURE (T_s), °F	DRY GAS METER TEMPERATURE INLET ($T_{m_{in}}$), °F	DRY GAS METER TEMPERATURE OUTLET ($T_{m_{out}}$), °F	PUMP VACUUM, in. Hg	SAMPLE BOX TEMPERATURE °F	IMPINGER TEMPERATURE °F
	0											
7	92.		217.424	.870	1.18	1.18	97	107	96	4.0	N/A	66
8	96.		220.064	.940	1.30	1.30	97	107	96	5.0		67
9	100.		223.000	1.100	1.57	1.57	97	108	95	5.0		64
10	104.		226.041	1.150	1.59	1.59	94	108	95	5.0		64
11	108.		229.121	1.150	1.59	1.59	94	108	95	5.0		64
12	112.		232.231	1.200	1.70	1.70	94	108	94	5.3		66
13	116.		235.496	1.200	1.70	1.70	94	108	94	5.5		67
14	120.		238.666	1.200	1.70	1.70	95	108	94	5.5		67
15	124.		241.841	1.200	1.70	1.70	95	108	94	5.5		67
16	128.	1536	245.054	1.150	1.59	1.59	95	108	94	5.5		67

LEAKAGE @ _____ "Hg = _____ CFM

GAS METER COR. _____

PEDCo - ENVIRONMENTAL
SUITE 8 • ATKINSON SQUARE
CINCINNATI, OHIO 45246

PLANT RALSTON PURINA
DATE 6 NOV. 72
SAMPLING LOCATION PELLET COOLER-OUTLET
SAMPLE TYPE PARTICULATE
RUN NUMBER 2
OPERATOR G. FORTE
AMBIENT TEMPERATURE 60
BAROMETRIC PRESSURE ~~30.08~~ 29.58
STATIC PRESSURE, (P_s) -0.42
FILTER NUMBER(s) 200056
STACK DIMEN. 34.5
PITOT TUBE "S" TYPE

PROBE LENGTH AND TYPE 3' GLASS
NOZZLE I.D. 0.1875
ASSUMED MOISTURE, % 2
SAMPLE BOX NUMBER –
METER BOX NUMBER –
METER $\Delta H_@$ 1.40 @ 0.75 CFM
C FACTOR 0.82
PROBE HEATER SETTING –
HEATER BOX SETTING –
REFERENCE Δp 1.78

SCHEMATIC OF TRAVERSE POINT LAYOUT

READ AND RECORD ALL DATA EVERY 3 .5 MINUTES

7 8 9 10	11 12 13 14	15 16 17 18	19 20 21 22 23 24	25 26 27 28 29	30 31 32 33	34 35 36 37	38 39 40 41	42 43 44	45 46 47	48 49 50 51	52 53 54	55 56 57
TRAVERSE POINT NUMBER	SAMPLING TIME, min	CLOCK TIME (24 hr CLOCK)	GAS METER READING (V_m), ft^3	VELOCITY HEAD (Δp_s), in. H_2O	ORIFICE PRESSURE DIFFERENTIAL (ΔH), in. H_2O DESIRED	ORIFICE PRESSURE DIFFERENTIAL (ΔH), in. H_2O ACTUAL	STACK TEMPERATURE (T_s), °F	DRY GAS METER TEMPERATURE INLET ($T_{m_{in}}$), °F	DRY GAS METER TEMPERATURE OUTLET ($T_{m_{out}}$), °F	PUMP VACUUM, in. Hg	SAMPLE BOX TEMPERATURE °F	IMPINGER TEMPERATURE °F
	0	1340	605.400									
SE-1	3.5		607.01	0.41	0.44	0.44	87	82	80	3.0		60
2	7.0		608.60	.43	.46	.46	87	84	80	3.0		62
3	10.5		610.18	.43	.46	.46	87	88	80	3.0		65
4	14.0		611.89	.50	.54	.54	87	90	81	4.0		65
5	17.5		613.66	.51	.55	.55	90	95	83	4.0		65
6	21.0		615.46	.54	.58	.58	90	100	86	4.5		65
7	24.5		617.28	.55	.59	.59	90	104	88	4.5		65
8	28.0		619.17	.60	.65	.65	90	108	90	5.0		65
9	31.5		621.11	.63	.67	.67	90	112	92	5.0		65
10	35.0		623.04	.61	.65	.65	90	115	95	5.0		65
11	38.5		625.00	.57	.61	.61	90	118	97	4.5		65
12	42.0		626.79	.57	.61	.61	90	120	99	4.5		65
13	45.5		628.69	.58	.62	.62	90	122	101	4.5		65
14	49.0		630.56	.61	.65	.65	90	124	103	5.0		65
15	52.5		632.52	.63	.67	.67	90	126	104	5.0		65
16	56.0		634.53	.63	.67	.67	90	128	107	5.0		67
17	59.5		636.48	.59	.64	.64	90	128	108	5.0		67
18	63.0		638.332	.61	.65	.65	90	129	109	5.0		67
SW-1	66.5		640.11	.48	.51	.51	90	126	110	4.0		67
2	70.0		641.86	.48	.51	.51	90	126	110	4.0		67
3	73.5		643.60	.49	.53	.53	90	127	110	4.0		67
4	77.0		645.41	.52	.56	.56	90	128	111	4.0		67

LEAKAGE @ 15 "Hg = 0 CFM

GAS METER COR.

PEDCo - ENVIRONMENTAL
SUITE B • ATKINSON SQUARE
CINCINNATI, OHIO 45246

FIELD DATA

PLANT
DATE
SAMPLING LOCATION OUTLET
SAMPLE TYPE
RUN NUMBER 2
OPERATOR
AMBIENT TEMPERATURE
BAROMETRIC PRESSURE
STATIC PRESSURE, (P_s)
FILTER NUMBER(s)
STACK DIMEN.
PITOT TUBE

PROBE LENGTH AND TYPE
NOZZLE I.D.
ASSUMED MOISTURE, %
SAMPLE BOX NUMBER
METER BOX NUMBER
METER $\Delta H_@$
C FACTOR
PROBE HEATER SETTING
HEATER BOX SETTING
REFERENCE Δp

SCHEMATIC OF TRAVERSE POINT LAYOUT

READ AND RECORD ALL DATA EVERY ___0___ MINUTES

8 9 10	11 12 13 14	15 16 17 18	19 20 21 . 22 23 24	25 26 27 28 29	30 31 32 33	34 35 36 37	38 39 40 41	42 43 44	45 46 47	48 49 50 51	52 53 54	55 56 57
TRAVERSE POINT NUMBER	SAMPLING TIME, min	CLOCK TIME (24 hr CLOCK)	GAS METER READING (V_m), ft^3	VELOCITY HEAD (Δp_s), in. H_2O	ORIFICE PRESSURE DIFFERENTIAL (ΔH), in. H_2O DESIRED	ORIFICE PRESSURE DIFFERENTIAL (ΔH), in. H_2O ACTUAL	STACK TEMPERATURE (T_s), °F	DRY GAS METER TEMPERATURE INLET ($T_{m_{in}}$), °F	DRY GAS METER TEMPERATURE OUTLET ($T_{m_{out}}$), °F	PUMP VACUUM, in. Hg	~~SAMPLE BOX TEMPERATURE °F~~	IMPINGER TEMPERATURE °F
	0		.									
SW-5	80.5		647.29	0.57	.61	.61	90	128	112	5.0		67
6	84.0		649.18	.57	.61	.61	90	128	112	5.0		67
7	87.5		651.14	.62	.66	.66	90	129	112	5.0		67
8	91.0		653.13	.62	.66	.66	90	129	112	5.0		67
9	94.5		655.18	.67	.72	.72	90	129	112	5.5		67
10	98.0		657.19	.62	.66	.66	90	129	112	5.5		67
11	101.5		659.17	.62	.66	.66	90	129	112	5.5		67
12	105.0		661.15	.62	.66	.66	90	129	112	5.5		67
13	108.5		663.15	.63	.67	.67	90	130	113	5.0		67
14	112.0		665.22	.67	.72	.72	90	130	113	5.5		67
15	115.5		667.31	.68	.73	.73	90	130	113	5.5		67
16	119.0		669.43	.70	.75	.75	90	130	113	5.5		67
17	122.5		671.54	.70	.75	.75	90	130	113	5.5		67
18	126.0	1548	671.657	.71	.76	.76	90	130	113	5.5		67
	.		.	.	.	.				.		
	.		.	.	.	.				.		
	.		.	.	.	.				.		
	.		.	.	.	.				.		
	.		.	.	.	.				.		
	.		.	.	.	.				.		
	.		.	.	.	.				.		
	.		.	.	.	.				.		
	.		.	.	.	.				.		
	.		.	.	.	.				.		

LEAKAGE @ ____ "Hg = ____ CFM

GAS METER COR. ____
7 8 9 10 11

PEDCo - ENVIRONMENTAL
SUITE 8 • ATKINSON SQUARE
CINCINNATI, OHIO 45246

PLANT RALSTON PURINA, LOUISVILLE, KY.
DATE 6 NOV. 72
SAMPLING LOCATION PELLET COOLER INLET
SAMPLE TYPE PARTICULATE
RUN NUMBER 3
OPERATOR R. S. AMICK
AMBIENT TEMPERATURE 60°F
BAROMETRIC PRESSURE ~~29.88~~ 29.45
STATIC PRESSURE, (P_s) -1.2" H_2O
FILTER NUMBER(s) 2000 53
STACK DIMEN. 30 IN. I.D.
PITOT TUBE "S"

PROBE LENGTH AND TYPE 4' GLASS
NOZZLE I.D. .1875 IN.
ASSUMED MOISTURE, % 2
SAMPLE BOX NUMBER —
METER BOX NUMBER 6
METER $\Delta H_@$ 1.85 @ 0.75 cfm
C FACTOR 1.0
PROBE HEATER SETTING N/A
HEATER BOX SETTING N/A
REFERENCE Δp 1.31

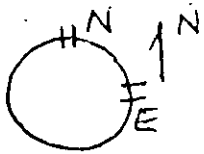

SCHEMATIC OF TRAVERSE POINT LAYOUT

READ AND RECORD ALL DATA EVERY 4.0 MINUTES

8 9 10	11 12 13 14	15 16 17 18	19 20 21 22 23 24	25 26 27 28 29	30 31 32 33	34 35 36 37	38 39 40 41	42 43 44	45 46 47	48 49 50 51	52 53 54	55 56 57
TRAVERSE POINT NUMBER	SAMPLING TIME, min	CLOCK TIME (24 hr CLOCK)	GAS METER READING (V_m), ft^3	VELOCITY HEAD (Δp_s), in. H_2O	ORIFICE PRESSURE DIFFERENTIAL (ΔH), in. H_2O DESIRED	ORIFICE PRESSURE DIFFERENTIAL (ΔH), in. H_2O ACTUAL	STACK TEMPERATURE (T_s), °F	DRY GAS METER TEMPERATURE INLET ($T_{m_{in}}$), °F	DRY GAS METER TEMPERATURE OUTLET ($T_{m_{out}}$), °F	PUMP VACUUM, in. Hg	SAMPLE BOX TEMPERATURE °F	IMPINGER TEMPERATURE °F
	0	1625	245.908									
N-1	4.		248.094	.570	.81	.81	96	82	82	50	N/A	65
2	8.		250.354	.640	.88	.88	96	88	82	5.5		57
3	12.		252.632	.640	.88	.88	96	91	82	5.5		56
4	16.		254.196	.680	.95	.95	94	94	83	6.0		56
5	20.		257.419	.720	.98	.98	95	96	84	6.0		57
6	24.		259.750	.750	1.02	1.02	97	97	84	6.0		57
7	28.		261.916	.800	1.09	1.09	96	98	85	6.0		57
8	32.		264.751	.880	1.22	1.22	94	99	85	6.0		57
9	36.		267.530	.980	1.38	1.38	90	101	86	9.0		57
10	40.		270.564	1.200	1.65	1.65	90	102	86	9.0		57
11	44.		273.700	1.200	1.65	1.65	90	103	86	9.0		57
12	48.		276.811	1.200	1.65	1.65	90	103	86	9.0		57
13	52.		279.970	1.200	1.65	1.65	90	103	86	9.0		58
14	56.		283.144	1.200	1.65	1.65	90	103	86	9.0		58
15	60.		286.084	1.200	1.65	1.65	90	102	86	9.0		58
16	64.		288.859	.950	1.30	1.30	90	101	85	9.0		58
E	0.		.	~~.650~~	~~.91~~	.		~~89~~	~~84~~	.		
1	68.		291.116	.650	.91	.91	90	89	84	5.5		58
2	72.		293.530	.740	.98	.98	90	91	84	5.5		58
3	76.		295.999	.760	1.05	1.05	90	93	84	6.0		59
4	80.		298.491	.800	1.10	1.10	92	96	84	6.0		60
5	84.		301.052	.880	1.18	1.18	92	97	84	7.0		58
6	88.		303.812	.900	1.20	1.20	92	98	84	7.0		58

LEAKAGE @ 15 "Hg = 0 CFM

GAS METER COR. . (7 8 9 10 11)

PEDCo - ENVIRONMENTAL
SUITE 8 • ATKINSON SQUARE
CINCINNATI, OHIO 45246

FIELD DATA

Particulate #3 Continued Inlet

PLANT RALSTON PURINA
DATE
SAMPLING LOCATION
SAMPLE TYPE
RUN NUMBER
OPERATOR
AMBIENT TEMPERATURE
BAROMETRIC PRESSURE
STATIC PRESSURE, (P_s)
FILTER NUMBER(s)
STACK DIMEN.
PITOT TUBE

PROBE LENGTH AND TYPE
NOZZLE I.D.
ASSUMED MOISTURE, %
SAMPLE BOX NUMBER
METER BOX NUMBER
METER $\Delta H_@$
C FACTOR
PROBE HEATER SETTING
HEATER BOX SETTING
REFERENCE Δp

SCHEMATIC OF TRAVERSE POINT LAYOUT

READ AND RECORD ALL DATA EVERY 4 MINUTES

8 9 10	11 12 13 14	15 16 17 18	19 20 21 22 23 24	25 26 27 28 29	30 31 32 33	34 35 36 37	38 39 40 41	42 43 44	45 46 47	48 49 50 51	52 53 54	55 56 57
TRAVERSE POINT NUMBER	SAMPLING TIME, min	CLOCK TIME (24 hr CLOCK)	GAS METER READING (V_m), ft^3	VELOCITY HEAD (Δp_s), in. H_2O	ORIFICE PRESSURE DIFFERENTIAL (ΔH), in. H_2O DESIRED	ACTUAL	STACK TEMPERATURE (T_s), °F	DRY GAS METER TEMPERATURE INLET ($T_{m_{in}}$), °F	OUTLET ($T_{m_{out}}$), °F	PUMP VACUUM, in. Hg	SAMPLE BOX TEMPERATURE °F	IMPINGER TEMPERATURE °F
	0											
7	92		306.314	.950	1.29	1.29	90	99	85	7.0	N/A	58
8	96		309.419	.980	1.30	1.30	90	100	85	7.0	↓	58
9	100		311.887	.980	1.30	1.30	90	100	85	7.0	↓	59
10	104		314.644	1.000	1.32	1.32	90	100	85	7.0	↓	59
11	108		317.249	1.000	1.32	1.32	90	100	85	7.0	↓	60
12	112		320.333	1.000	1.32	1.32	90	101	85	7.0	↓	60
13	116		323.060	1.000	1.32	1.32	90	102	86	7.0	↓	60
14	120		325.875	1.000	1.32	1.32	90	102	86	7.0	↓	60
15	123.6		328.437	1.000	1.32	1.32	90	102	86	7.0	↓	61

LEAKAGE @ ____ "Hg = ____ CFM

GAS METER COR. ____.____
7 8 9 10 11

PEDCo - ENVIRONMENTAL
SUITE 8 • ATKINSON SQUARE
CINCINNATI, OHIO 45246

PLANT RALSTON PURINA
DATE 6 NOV. 72
SAMPLING LOCATION PELLET COOLER-OUTLET
SAMPLE TYPE PARTICULATE
RUN NUMBER 4
OPERATOR G. FORTE
AMBIENT TEMPERATURE 50
BAROMETRIC PRESSURE 29.45
STATIC PRESSURE, (P_s) -0.42
FILTER NUMBER(s) 200054
STACK DIMEN. 34.5
PITOT TUBE "S" TYPE

PROBE LENGTH AND TYPE 4' GLASS
NOZZLE I.D. 0.250
ASSUMED MOISTURE, % 2
SAMPLE BOX NUMBER –
METER BOX NUMBER –
METER $\Delta H_@$ 1.40 @ 0.75 CFM
C FACTOR 0.82
PROBE HEATER SETTING –
HEATER BOX SETTING –
REFERENCE Δp 1.78

SCHEMATIC OF TRAVERSE POINT LAYOUT

READ AND RECORD ALL DATA EVERY 3.5 MINUTES

7 8 9 10	11 12 13 14	15 16 17 18	19 20 21 22 23 24	25 26 27 28 29	30 31 32 33	34 35 36 37	38 39 40 41	42 43 44	45 46 47	48 49 50 51	52 53 54	55 56 57
TRAVERSE POINT NUMBER	SAMPLING TIME, min	CLOCK TIME (24 hr CLOCK)	GAS METER READING (V_m), ft^3	VELOCITY HEAD (Δp_s), in. H_2O	ORIFICE PRESSURE DIFFERENTIAL (ΔH), in. H_2O DESIRED	ORIFICE PRESSURE DIFFERENTIAL (ΔH), in. H_2O ACTUAL	STACK TEMPERATURE (T_s), °F	DRY GAS METER TEMPERATURE INLET ($T_{m_{in}}$), °F	DRY GAS METER TEMPERATURE OUTLET ($T_{m_{out}}$), °F	PUMP VACUUM, in. Hg	SAMPLE BOX TEMPERATURE °F	IMPINGER TEMPERATURE °F
	0		673.742									
SW-1	3.5		676.55	0.43	1.43	1.43	90	104	95	4.0		82
2	7.0		679.29	.41	1.35	1.35	90	108	95	4.0		82
3	10.5		682.09	.43	1.43	1.43	90	108	95	4.0		82
4	14.0		685.01	.51	1.70	1.70	90	110	95	4.5		82
5	17.5		688.18	.54	1.80	1.80	90	115	96	4.5		84
6	21.0		690.89	.55	1.82	1.82	90	120	98	4.5		84
7	24.5		694.57	.57	1.89	1.89	90	122	99	4.5		84
8	28.0		697.93	.61	2.00	2.00	90	126	100	5.0		84
9	31.5		701.30	.64	2.10	2.10	90	128	102	5.0		84
10	35.0		704.65	.58	1.92	1.92	90	130	104	5.0		78
11	38.5		707.99	.60	1.98	1.98	90	131	104	5.0		78
12	42.0		711.29	.60	1.98	1.98	90	132	105	5.0		72
13	45.5		714.62	.62	2.02	2.02	90	133	107	5.0		72
14	49.0		718.16	.66	2.18	2.18	90	134	108	5.5		70
15	52.5		721.71	.68	2.20	2.20	90	135	108	5.5		66
16	56.0		725.25	.68	2.20	2.20	90	136	109	5.5		65
17	59.5		728.72	.65	2.15	2.15	90	136	110	5.0		65
18	63.0		732.093	.60	1.98	1.98	90	136	110	5.0		65
SW-1	66.5		735.32	.54	1.80	1.80	90	132	110	4.0		63
2	70.0		738.54	.57	1.89	1.89	90	131	110	4.5		63
3	73.5		741.84	.58	1.92	1.92	90	131	110	4.5		63
4	77.0		745.41	.60	1.98	1.98	90	132	110	5.0		63

LEAKAGE @ 15 "Hg = 0.004 CFM

GAS METER COR. 0.

PEDCo - ENVIRONMENTAL
SUITE B • ATKINSON SQUARE
CINCINNATI, OHIO 45246

PLANT
DATE
SAMPLING LOCATION OUTLET
SAMPLE TYPE
RUN NUMBER 4
OPERATOR
AMBIENT TEMPERATURE
BAROMETRIC PRESSURE
STATIC PRESSURE, (P_s)
FILTER NUMBER(s)
STACK DIMEN.
PITOT TUBE

PROBE LENGTH AND TYPE
NOZZLE I.D.
ASSUMED MOISTURE, %
SAMPLE BOX NUMBER
METER BOX NUMBER
METER $\Delta H_@$
C FACTOR
PROBE HEATER SETTING
HEATER BOX SETTING
REFERENCE Δp

SCHEMATIC OF TRAVERSE POINT LAYOUT

READ AND RECORD ALL DATA EVERY 3.5 MINUTES

7 8 9 10	11 12 13 14	15 16 17 18	19 20 21 22 23 24	25 26 27 28 29	30 31 32 33	34 35 36 37	38 39 40 41	42 43 44	45 46 47	48 49 50 51	52 53 54	55 56 57
TRAVERSE POINT NUMBER	SAMPLING TIME, min	CLOCK TIME (24 hr CLOCK)	GAS METER READING (V_m), ft^3	VELOCITY HEAD (Δp_s), in. H_2O	ORIFICE PRESSURE DIFFERENTIAL (ΔH), in. H_2O DESIRED	ORIFICE PRESSURE DIFFERENTIAL (ΔH), in. H_2O ACTUAL	STACK TEMPERATURE (T_s), °F	DRY GAS METER TEMPERATURE INLET ($T_{m_{in}}$), °F	DRY GAS METER TEMPERATURE OUTLET ($T_{m_{out}}$), °F	PUMP VACUUM, in. Hg	~~SAMPLE BOX TEMPERATURE~~	IMPINGER TEMPERATURE °F
	0											
SW-5	80.5		748.47	0.62	2.02	2.02	90	134	110	5.0		65
6	84.0		752.01	.61	2.00	2.00	90	134	110	5.0		65
7	87.5		755.32	.61	2.00	2.00	90	135	111	5.0		65
8	91.0		758.76	.60	1.98	1.98	90	135	111	5.0		65
9	94.5		762.11	.50	1.95	1.95	90	135	112	4.5		65
10	98.0		765.42	.58	1.92	1.92	90	135	112	4.5		65
11	101.5		768.77	.58	1.92	1.92	90	135	112	4.5		65
12	105.0		772.07	.58	1.92	1.92	90	136	112	4.5		65
13	108.5		775.39	.59	1.95	1.95	90	136	112	4.5		65
14	112.0		778.83	.60	1.98	1.98	90	136	112	4.5		65
15	115.5		782.24	.62	2.02	2.02	90	136	112	4.5		65
16	119.0		785.61	.63	2.05	2.05	90	136	112	4.5		65
17	122.5		788.99	.60	1.98	1.98	90	136	112	4.5		65
18	126.0	1032	792.354	.58	1.92	1.92	90	136	112	4.5		65

LEAKAGE @ ____ "Hg = ____ CFM

GAS METER COR. ____

PEDCo - ENVIRONMENTAL
SUITE 8 • ATKINSON SQUARE
CINCINNATI, OHIO 45246

FIELD DATA

p.1 of 2

PLANT RALSTON PURINA Louisville, Ky.
DATE 6 Nov. 72
SAMPLING LOCATION PELLET COOLER Inlet
SAMPLE TYPE PARTICULATE
RUN NUMBER #5
OPERATOR R.S. AMICK
AMBIENT TEMPERATURE 50°F
BAROMETRIC PRESSURE ~~30.05~~ 29.55
STATIC PRESSURE, (P_s) ~~-.05~~ -1.55
FILTER NUMBER(s) 200060
STACK DIMEN. 30" I.D.
PITOT TUBE "S"

PROBE LENGTH AND TYPE 36" Glass
NOZZLE I.D. .1875 in.
ASSUMED MOISTURE, % 2
SAMPLE BOX NUMBER —
METER BOX NUMBER 6
METER $\Delta H_@$ 1.85 @ 0.75 cfm
C FACTOR
PROBE HEATER SETTING N/A
HEATER BOX SETTING N/A
REFERENCE Δp 1.31

SCHEMATIC OF TRAVERSE POINT LAYOUT

READ AND RECORD ALL DATA EVERY 4 MINUTES

7 8 9 10 TRAVERSE POINT NUMBER	11 12 13 14 SAMPLING TIME, min	15 16 17 18 CLOCK TIME (24 hr CLOCK)	19 20 21 22 23 24 GAS METER READING (V_m), ft^3	25 26 27 28 29 VELOCITY HEAD (Δp_s), in. H_2O	30 31 32 33 ORIFICE PRESSURE DIFFERENTIAL (ΔH), in. H_2O DESIRED	34 35 36 37 ORIFICE PRESSURE DIFFERENTIAL (ΔH), in. H_2O ACTUAL	38 39 40 41 STACK TEMPERATURE (T_s), °F	42 43 44 DRY GAS METER TEMPERATURE INLET ($T_{m_{in}}$), °F	45 46 47 DRY GAS METER TEMPERATURE OUTLET ($T_{m_{out}}$), °F	48 49 50 51 PUMP VACUUM, in. Hg	52 53 54 SAMPLE BOX TEMPERATURE °F	55 56 57 IMPINGER TEMPERATURE °F
	0		328.627									
E-1	4.		331.124	.680	.97	.97	90	76	74	4.0	N/A	60
2	8.		333.454	.700	.98	.98	90	78	74	4.0		60
3	12.		335.860	.750	1.00	1.00	90	80	74	4.0		58
4	16.		338.299	.820	1.10	1.10	92	87	76	4.0		60
5	20.		340.821	.820	1.10	1.10	92	90	76	4.0		61
6	24.		343.341	.820	1.10	1.10	92	92	77	4.0		61
7	28.		345.921	.820	1.10	1.10	93	93	77	4.0		64
8	32.		348.600	.850	1.11	1.11	92	94	79	4.0		60
9	36.		351.050	.850	1.11	1.11	91	94	80	4.0		60
10	40.		353.674	.870	1.18	1.18	90	95	81	4.0		60
11	44.		356.111	.870	1.18	1.18	91	96	88	4.5		60
12	48.		358.962	.880	1.19	1.19	90	96	81	4.5		61
13	52.		361.664	.880	1.19	1.19	90	96	81	4.5		62
14	56.		364.271	.910	1.20	1.20	90	96	82	4.0		63
15	60.		366.944	.930	1.28	1.28	90	96	82	4.0		65
16	64.		369.673	.950	1.30	1.30	90	97	82	4.0		65
N												
1	68.		372.168	.680	.92	.92	90	82	78	4.0		65
2	72.		374.217	.680	.92	.92	90	85	78	4.0		65
3	76.		376.517	.630	.87	.87	90	87	79	4.0		66
4	80.		378.946	.770	1.05	1.05	90	91	79	4.0		66
5	84.		381.400	.750	1.03	1.03	90	92	80	4.0		66
6	88.		383.900	.770	1.05	1.05	90	93	80	4.0		66

LEAKAGE @ 15 "Hg = 0 CFM

GAS METER COR. 0.0

PEDCo - ENVIRONMENTAL
SUITE 8 • ATKINSON SQUARE
CINCINNATI, OHIO 45246

Pelle- Co
Inlet Test #5

FIELD DATA

PLANT
DATE
SAMPLING LOCATION
SAMPLE TYPE
RUN NUMBER
OPERATOR
AMBIENT TEMPERATURE
BAROMETRIC PRESSURE
STATIC PRESSURE, (P_s)
FILTER NUMBER(s)
STACK DIMEN.
PITOT TUBE

PROBE LENGTH AND TYPE
NOZZLE I.D.
ASSUMED MOISTURE, %
SAMPLE BOX NUMBER
METER BOX NUMBER
METER $\Delta H_@$
C FACTOR
PROBE HEATER SETTING
HEATER BOX SETTING
REFERENCE Δp

SCHEMATIC OF TRAVERSE POINT LAYOUT

READ AND RECORD ALL DATA EVERY 4.0 MINUTES

7 8 9 10 TRAVERSE POINT NUMBER	11 12 13 14 SAMPLING TIME, min	15 16 17 18 CLOCK TIME (24 hr CLOCK)	19 20 21 22 23 24 GAS METER READING (V_m), ft^3	25 26 27 28 29 VELOCITY HEAD (Δp_s), in. H_2O	30 31 32 33 ORIFICE PRESSURE DIFFERENTIAL (ΔH), in. H_2O DESIRED	34 35 36 37 ACTUAL	38 39 40 41 STACK TEMPERATURE (T_s), °F	42 43 44 DRY GAS METER TEMPERATURE INLET ($T_{m_{in}}$), °F	45 46 47 OUTLET ($T_{m_{out}}$), °F	48 49 50 51 PUMP VACUUM, in. Hg	52 53 54 SAMPLE BOX TEMPERATURE °F	55 56 57 IMPINGER TEMPERATURE °F
	0		.									
7	92.		386.514	.800	1.12	1.12	90	93	80	4.0	N/A	60
8	96.		388.938	.820	1.13	1.13	90	94	80	4.0		61
9	100.		391.584	.900	1.25	1.25	90	94	81	4.0		61
10	104.		394.296	.930	1.28	1.28	90	94	81	4.0		62
11	108.		396.500	.910	1.22	1.22	90	94	81	4.0		63
12	112.		399.673	.910	1.22	1.22	90	95	81	4.0		63
13	116.	402.716	[illegible]	.910	1.22	1.22	90	96	82	4.0		64
14	120.		405.020	.910	1.22	1.22	90	96	82	4.0		64
15	124.		407.721	.910	1.22	1.22	90	96	82	4.0		68
16	128.		410.362	.860	1.20	1.20	90	96	82	4.0		68

LEAKAGE @ ____ "Hg = ____ CFM

GAS METER COR. ____ 7 8 9 10 11

PEDCo - ENVIRONMENTAL
SUITE 8 • ATKINSON SQUARE
CINCINNATI, OHIO 45246

PLANT RALSTON PURINA
DATE 6 NOV. 72
SAMPLING LOCATION PELLET COOLER - OUTLET
SAMPLE TYPE PARTICULATES
RUN NUMBER 6
OPERATOR G. FORTE
AMBIENT TEMPERATURE 50°
BAROMETRIC PRESSURE ~~29.30~~ 29.40
STATIC PRESSURE, (P_s) -0.42
FILTER NUMBER(s) 200058
STACK DIMEN. 34.5
PITOT TUBE "S" TYPE

PROBE LENGTH AND TYPE 3' GLASS
NOZZLE I.D. 0.250
ASSUMED MOISTURE, % 2
SAMPLE BOX NUMBER —
METER BOX NUMBER —
METER $\Delta H_@$ 1.40 @ 0.75 CFM
C FACTOR 0.82
PROBE HEATER SETTING —
HEATER BOX SETTING —
REFERENCE Δp —

SCHEMATIC OF TRAVERSE POINT LAYOUT

READ AND RECORD ALL DATA EVERY 3.5 MINUTES

7 8 9 10	11 12 13 14	15 16 17 18	19 20 21 22 23 24	25 26 27 28 29	30 31 32 33	34 35 36 37	38 39 40 41	42 43 44	45 46 47	48 49 50 51	52 53 54	55 56 57
TRAVERSE POINT NUMBER	SAMPLING TIME, min	CLOCK TIME (24 hr CLOCK)	GAS METER READING (V_m), ft^3	VELOCITY HEAD (Δp_s), in. H_2O	ORIFICE PRESSURE DIFFERENTIAL (ΔH), in. H_2O DESIRED	ORIFICE PRESSURE DIFFERENTIAL (ΔH), in. H_2O ACTUAL	STACK TEMPERATURE (T_s), °F	DRY GAS METER TEMPERATURE INLET ($T_{m_{in}}$), °F	DRY GAS METER TEMPERATURE OUTLET ($T_{m_{out}}$), °F	PUMP VACUUM, in. Hg	SAMPLE BOX TEMPERATURE °F	IMPINGER TEMPERATURE °F
	0	920	793.144									
SE-1	3.5		795.94	0.44	1.45	1.45	90	96	94	4.0	~~70~~	70
2	7.0		798.71	.40	1.35	1.35	90	98	94	4.0	~~70~~	70
3	10.5		801.56	.49	1.62	1.62	90	102	94	4.0	~~75~~	75
4	14.0		804.53	.49	1.62	1.62	90	106	92	4.0	~~75~~	75
5	17.5		807.61	.53	1.75	1.75	90	110	92	4.0	~~75~~	75
6	21.0		810.75	.54	1.80	1.80	90	114	92	4.0	~~75~~	75
7	24.5		813.98	.57	1.89	1.89	90	116	93	4.5	~~75~~	75
8	28.0		817.32	.61	2.00	2.00	90	119	95	5.0	~~78~~	78
9	31.5		820.73	.64	2.10	2.10	90	120	96	5.0	~~78~~	78
10	35.0		824.16	.62	2.05	2.05	85	123	98	5.0	~~78~~	78
11	38.5		827.48	.62	2.05	2.05	85	124	98	5.0	~~78~~	78
12	42.0		830.84	.63	2.08	2.08	85	126	100	5.0		78
13	45.5		834.28	.63	2.08	2.08	85	127	101	5.0		78
14	49.0		837.77	.64	2.10	2.10	85	128	101	5.0		78
15	52.5		841.49	.67	2.20	2.20	85	129	102	5.0		78
16	56.0		844.99	.71	2.35	2.35	85	130	103	5.5		78
17	59.5		848.70	.71	2.35	2.35	85	130	103	5.5		78
18	63.0		852.417	.74	2.40	2.40	85	131	103	5.5		80
			*									
SW-1	66.5		85 0.85 ~~855.48~~	.46	1.55	1.55	85	128	105	4.0		80
2	70.0		86 1.44 ~~858.45~~	.46	1.55	1.55	85	129	105	4.0		80
3	73.5		864.45	.47	1.56	1.56	85	130	105	4.0		80
4	77.0		867.31	.47	1.56	1.56	85	128	104	4.0		80

LEAKAGE @ 15" Hg = 0 CFM * LEAK CHECKED

GAS METER COR. 6.433

PEDCo - ENVIRONMENTAL
SUITE 8 • ATKINSON SQUARE
CINCINNATI, OHIO 45246

PLANT
DATE
SAMPLING LOCATION OUTLET
SAMPLE TYPE
RUN NUMBER 6
OPERATOR
AMBIENT TEMPERATURE
BAROMETRIC PRESSURE
STATIC PRESSURE, (P_s)
FILTER NUMBER(s)
STACK DIMEN.
PITOT TUBE

PROBE LENGTH AND TYPE
NOZZLE I.D.
ASSUMED MOISTURE, %
SAMPLE BOX NUMBER
METER BOX NUMBER
METER $\Delta H_@$
C FACTOR
PROBE HEATER SETTING
HEATER BOX SETTING
REFERENCE Δp

SCHEMATIC OF TRAVERSE POINT LAYOUT

READ AND RECORD ALL DATA EVERY 3.5 MINUTES

7 8 9 10	11 12 13 14	15 16 17 18	19 20 21 22 23 24	25 26 27 28 29	30 31 32 33	34 35 36 37	38 39 40 41	42 43 44	45 46 47	48 49 50 51	52 53 54	55 56 57
TRAVERSE POINT NUMBER	SAMPLING TIME, min	CLOCK TIME (24 hr CLOCK)	GAS METER READING (V_m), ft^3	VELOCITY HEAD (Δp_s), in. H_2O	ORIFICE PRESSURE DIFFERENTIAL (ΔH), in. H_2O DESIRED	ORIFICE PRESSURE DIFFERENTIAL (ΔH), in. H_2O ACTUAL	STACK TEMPERATURE (T_s), °F	DRY GAS METER TEMPERATURE INLET ($T_{m_{in}}$), °F	DRY GAS METER TEMPERATURE OUTLET ($T_{m_{out}}$), °F	PUMP VACUUM, in. Hg	SAMPLE BOX TEMPERATURE °F	IMPINGER TEMPERATURE °F
	0											
SW-5	80.5		870.21	.46	1.55	1.55	85	126	104	4.0		80
6	84.0		873.21	.46	1.55	1.55	85	124	104	4.0		77
7	87.5		876.23	.48	1.60	1.60	85	125	104	4.0		77
8	91.0		879.30	.50	1.65	1.65	85	125	104	4.0		77
9	94.5		882.54	.55	1.82	1.82	85	126	105	4.5		77
10	98.0		885.80	.60	2.00	2.00	85	127	105	4.5		77
11	101.5		889.31	.62	2.02	2.02	85	129	104	5.0		77
12	105.0		892.87	.62	2.02	2.02	85	129	104	5.0		77
13	108.5		896.38	.63	2.10	2.10	85	131	106	5.0		77
14	112.0		899.95	.65	2.15	2.15	85	132	106	5.0		77
15	115.5		903.47	.65	2.15	2.15	85	132	106	5.0		77
16	119.0		907.18	.67	2.20	2.20	85	134	107	5.0		77
17	122.5		910.85	.69	2.25	2.25	85	134	107	5.0		77
18	126.0	2135	914.388	.70	2.30	2.30	85	134	107	5.0		77

LEAKAGE @ ____ "Hg = ____ CFM

GAS METER COR. ____

PEDCo - ENVIRONMENTAL
SUITE 8 • ATKINSON SQUARE
CINCINNATI, OHIO 45246

PLANT RALSTON - PURINA - LOUISVILLE, KY.
DATE 7 NOV. 72
SAMPLING LOCATION HAMMERMILL OUTLET
SAMPLE TYPE PARTICULATE
RUN NUMBER #7
OPERATOR R. AMICK
AMBIENT TEMPERATURE 60°F
BAROMETRIC PRESSURE ~~29.70~~ 29.20
STATIC PRESSURE, (P_s) -.31
FILTER NUMBER(s) ~~[illegible]~~ 200059
STACK DIMEN. 18" I.D.
PITOT TUBE "S"

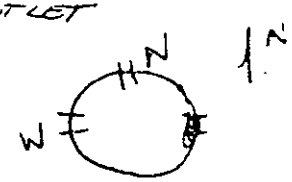

PROBE LENGTH AND TYPE 24" Glass
NOZZLE I.D. .1875 in.
ASSUMED MOISTURE, % 2
SAMPLE BOX NUMBER —
METER BOX NUMBER —
METER $\Delta H_@$ 1.40 @ 0.75 cfm
C FACTOR 0.86
PROBE HEATER SETTING N/A
HEATER BOX SETTING N/A
REFERENCE Δp - 1.65

SCHEMATIC OF TRAVERSE POINT LAYOUT
READ AND RECORD ALL DATA EVERY 7.5 MINUTES

7 8 9 10	11 12 13 14	15 16 17 18	19 20 21 22 23 24	25 26 27 28 29	30 31 32 33	34 35 36 37	38 39 40 41	42 43 44	45 46 47	48 49 50 51	52 53 54	55 56 57
TRAVERSE POINT NUMBER	SAMPLING TIME, min	CLOCK TIME (24 hr CLOCK)	GAS METER READING (V_m), ft^3	VELOCITY HEAD (Δp_s), in. H_2O	ORIFICE PRESSURE DIFFERENTIAL (ΔH), in. H_2O DESIRED	ORIFICE PRESSURE DIFFERENTIAL (ΔH), in. H_2O ACTUAL	STACK TEMPERATURE (T_s), °F	DRY GAS METER TEMPERATURE INLET ($T_{m_{in}}$), °F	DRY GAS METER TEMPERATURE OUTLET ($T_{m_{out}}$), °F	PUMP VACUUM, in. Hg	SAMPLE BOX TEMPERATURE °F	IMPINGER TEMPERATURE °F
	0		914.549									
N-1	7.50	1230	920.846	1.100	1.25	1.25	70	62	62	3.0	N/A	65
2	15.00		926.541	1.100	1.25	1.25	70	81	64 64	3.0		65
3	22.50		931.714	.970	1.18	1.18	70	92	70	3.0		65
4	30.00		936.164	.650	.75	.75	70	95	74	3.0		65
5	37.50	*	[illegible]	-.100	.00	.00	70	92	78	0.0		65
6	45.00		941.085	.700	.82	.82	70	98	80	2.0		66
7	52.50		946.999	1.600	1.80	1.80	70	103	80	3.0		63
8	60.00	1330	954.495	1.600	1.80	1.80	70	107	83	3.0		62
	.	1430	.	.	.	.				.		
W-1	67.50		961.503	1.400	1.62	1.62	70	60	60	4.0		62
2	75.00		967.454	1.200	1.38	1.38	70	83	64	3.0		65
3	82.50		973.421	1.200	1.38	1.38	70	80	69	3.0		65
4	90.00		978.141	.750	.87	.87	70	96	76	3.0		66
5	97.50	*	0 .	-.100	.	.	70			.		
6	105.00		984.586	1.30	1.48	1.48	80	96	76	3.0		67
7	112.50		991.283	1.70	1.95	1.95	80	106	80	4.0		66
8	120.00		998.598	1.50	1.68	1.68	80	112	85	4.0		67
	.		.	.	.	.				.		
	.		.	.	.	.				.		
	.		.	.	.	.				.		
	.		.	.	.	.				.		
	.		.	.	.	.				.		
	.		.	.	.	.				.		
	.		.	.	.	.				.		

LEAKAGE @ 15 "Hg - 0 CFM

GAS METER COR. 00

* Negative Flow - very little Sample taken for this period
0 • ~~Volume Sampled (936.822 - 936.164 = .658) [illegible]~~ no positive flow at this point. Volume should be included.

PEDCo - ENVIRONMENTAL
SUITE 8 • ATKINSON SQUARE
CINCINNATI, OHIO 45246

PLANT RALSTON - PURINA - LOUISVILLE, KY.
DATE 7 NOV. 72
SAMPLING LOCATION HAMMERMILL
SAMPLE TYPE PARTICULATE
RUN NUMBER 8
OPERATOR R. S. ALMICK
AMBIENT TEMPERATURE 54°F - RAINY & WINDY
BAROMETRIC PRESSURE 29.70 29.20
STATIC PRESSURE, (P_s) -.27
FILTER NUMBER(s) 200061
STACK DIMEN. 18 in. I.D.
PITOT TUBE "S"

PROBE LENGTH AND TYPE 24"
NOZZLE I.D. .1875 in.
ASSUMED MOISTURE, % 2
SAMPLE BOX NUMBER —
METER BOX NUMBER —
METER $\Delta H_@$ 1.70 @ 0.75 cfm
C FACTOR 0.86
PROBE HEATER SETTING N/A
HEATER BOX SETTING N/A
REFERENCE Δp 1.65

HN 1
W I

SCHEMATIC OF TRAVERSE POINT LAYOUT

READ AND RECORD ALL DATA EVERY 4. MINUTES

7 8 9 10 TRAVERSE POINT NUMBER	11 12 13 14 SAMPLING TIME, min	15 16 17 18 CLOCK TIME (24 hr CLOCK)	19 20 21 22 23 24 GAS METER READING (V_m), ft^3	25 26 27 28 29 VELOCITY HEAD (Δp_s), in. H_2O	30 31 32 33 ORIFICE PRESSURE DIFFERENTIAL (ΔH), in. H_2O DESIRED	34 35 36 37 ACTUAL	38 39 40 41 STACK TEMPERATURE (T_s), °F	42 43 44 DRY GAS METER TEMPERATURE INLET ($T_{m_{in}}$), °F	45 46 47 OUTLET ($T_{m_{out}}$), °F	48 49 50 51 PUMP VACUUM, in. Hg	52 53 54 SAMPLE BOX TEMPERATURE °F	55 56 57 IMPINGER TEMPERATURE °F
	0	1620	998.866									
N1	4.		2.380	1.400	1.60	1.60	80	96	85	4.0	N/A	60°
2	8.		1005.724	1.400	1.60	1.60	80	102	85	4.0	N/A	61
3	12.		1008.654	0.350	.41	.41	80	103	86	4.0		60
4	16.		1010.673	0.410	.49	.49	80	104	87	4.0		60
5	20.		1012.544	.430	.52	.52	80	106	88	4.0		60
6	24.		1015.614	1.500	1.70	1.70	80	109	88	4.0		60
7	28.		1019.085	1.700	1.95	1.95	80	116	89	4.0		60
8	32.		1021.862	1.700	1.95	1.95	80	118	90	5.0		60
	.		.	-.100	.	.				.		
W-1	36.		1026.544	1.300	1.52	1.52	76	104	88	5.0		62
2	40.		1030.085	1.500	1.70	1.70	76	106	87	5.0		63
3	44.		1033.361	1.100	1.27	1.27	76	110	87	5.0		64
4	48.		1035.999	0.480	0.56	0.56	77	113	86	5.0		65
5	52.	☆	.	-.100	.	.	77			.		
6	56.		1040.454	1.300	1.52	1.52	76	102	84	6.0		65
7	60.		1044.321	1.750	2.00	2.00	77	102	83	7.0		65
8	64.	1700	1048.652	1.800	2.05	2.05	76	103	83	7.0		65

LEAKAGE @ 15 "Hg = 0 CFM ☆ Negative Flow (Upward)

GAS METER COR. 0.0

PEDCo - ENVIRONMENTAL
SUITE 8 • ATKINSON SQUARE
CINCINNATI, OHIO 45246

PLANT RALSTON PURINA
DATE 7 NOV 72
SAMPLING LOCATION HAMMERMILL
SAMPLE TYPE PARTICULATE
RUN NUMBER #9
OPERATOR R.S. AMICK
AMBIENT TEMPERATURE 52°F
BAROMETRIC PRESSURE ~~29.94~~ 28.20
STATIC PRESSURE, (P_s) -.31
FILTER NUMBER(s) 200062
STACK DIMEN. 18 in
PITOT TUBE "S"

PROBE LENGTH AND TYPE 24" Glass
NOZZLE I.D. .1875
ASSUMED MOISTURE, % 2
SAMPLE BOX NUMBER —
METER BOX NUMBER —
METER $\Delta H_@$ 1.40 @ 0.75 cfm
C FACTOR 0.80
PROBE HEATER SETTING N/A
HEATER BOX SETTING N/A
REFERENCE Δp 1.65

SCHEMATIC OF TRAVERSE POINT LAYOUT
READ AND RECORD ALL DATA EVERY 4.0 MINUTES

7 8 9 10	11 12 13 14	15 16 17 18	19 20 21 22 23 24	25 26 27 28 29	30 31 32 33	34 35 36 37	38 39 40 41	42 43 44	45 46 47	48 49 50 51	52 53 54	55 56 57
TRAVERSE POINT NUMBER	SAMPLING TIME, min	CLOCK TIME (24 hr CLOCK)	GAS METER READING (V_m), ft^3	VELOCITY HEAD (Δp_s), in. H_2O	ORIFICE PRESSURE DIFFERENTIAL (ΔH), in. H_2O DESIRED	ORIFICE PRESSURE DIFFERENTIAL (ΔH), in. H_2O ACTUAL	STACK TEMPERATURE (T_s), °F	DRY GAS METER TEMPERATURE INLET ($T_{m_{in}}$), °F	DRY GAS METER TEMPERATURE OUTLET ($T_{m_{out}}$), °F	PUMP VACUUM, in. Hg	SAMPLE BOX TEMPERATURE °F	IMPINGER TEMPERATURE °F
	0	1830	48.778									
W-1	4.		52.111	1.500	1.75	1.75	74	55	55	4.0	N/A	60
2	8.		55.864	1.300	1.50	1.50	74	79	57	4.0		60
3	12.		58.971	1.300	1.50	1.50	76	76	58	4.0		61
4	16.		61.741	.900	1.05	1.05	75	78	60	4.0		61
5	20.	*	.	-.100	.	.	75			.		
6	24.		65.653	1.000	1.12	1.12	76	83	61	5.0		60
7	28.		69.520	1.850	2.18	2.18	77	86	63	5.0		59
8	32.		73.476	1.850	2.18	2.18	77	88	64	6.0		59
N	36.		.	1.600	1.90	1.90	78	79	65	6.0		59
1	40.		77.124	1.600	1.90	1.90	77	8		.		61
2	44.		80.946	1.600	1.90	1.90	76	79	66	.		62
3	48.		83.811	1.000	1.12	1.12	76	83	67	.		62
4	48.		86.941	1.000	1.12	1.12	75	87	68	.		63
5	52.		89.811	1.000	1.12	1.12	75	88	68	.		65
6	56.		93.999	1.800	2.00	2.00	76	89	68	.		65
7	60.		96.923	1.400	1.65	1.65	77	91	69	.		65
8	64.		100.536	1.500	1.75	1.75	77	92	70	.		64

LEAKAGE @ 13 "Hg = 0 CFM

* Negative flow - Skipped point & did not sample

GAS METER COR. 0.0

PEDCo - ENVIRONMENTAL
SUITE 8 • ATKINSON SQUARE
CINCINNATI, OHIO 45246

GAS VELOCITY AND VOLUME DATA

Test No. Preliminary Vel. Traverse

Location Pellet Cooler Inlet

VELOCITY TRAVERSE DATA

Point	Position Inches[a]	Reading, Δp "H_2O	$\sqrt{\Delta p}$	T_s °F
N-1	1.00	0.49		90
2	1.5	.52		
3	2.6	.55		
4	3.8	.68		
5	5.1	.70		
6	~~[illegible]~~ 6.6	.73		
7	8.5	.77		
8	11.3	.84		
9	18.8	.91		
10	21.5	.92		
11	23.4	.92		
12	24.9	.92		
13	26.3	.91		
14	27.5	.89		
15	28.5	.86		
16	29.0	.78		
E-1		0.54		
2		.64		
3		.68		
4		.77		
5		.79		
6		.80		
7		.83		
Total		-		
Average		-		

a) From outside of port to sampling point.

Pitot tube 5"

Manometer -

Thermometer

Data Recorder R.W.G. + GF

Date 6 Nov. 72

Stack Inside Dimensions 30" ϕ (3½" NIPPLE)

Stack Area, A_s = _____ sq. ft.

Barometric Pressure, P_b = 29.58 "Hg

Stack Gage Pressure = -1.6 "H_2O

Stack Abs. Pressure, P_s = _____ $\frac{\text{"}H_2O}{13.6}$ + P_b = _____ "H

Stack Gas Temp., T_s = _____ °F + 460 = _____ °R

Molecular Weight of Stack Gas, M_s = _____

$$V_s = 174 \sqrt{\Delta p}\ Cp \sqrt{T_s \times \frac{29.92}{P_s} \times \frac{29}{M_s}}\ \text{ft/min.}$$

V_s =

Q, Volume = _____ ft/min. x _____ sq. ft. = _____ cf

Q_w, Standard Volume at 70°F and 29.92 "Hg (Wet Basis) =

$$Q \times \frac{530}{T_s} \times \frac{P_s}{29.92} = 17.7 \times \_\_\_ \times \_\_\_ = \_\_\_$$

$Q_s = Q_w \times (100-W)/100$ = _____

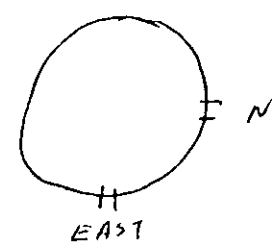

PEDCo-ENVIRONMENTAL
SUITE 8 • ATKINSON SQUARE
CINCINNATI, OHIO 45246
513/771-4330

GAS VELOCITY AND VOLUME DATA

Test No. _____

Location INLET (CONT'D)

VELOCITY TRAVERSE DATA

Point	Position Inches[a]	Reading, Δp "H_2O	$\sqrt{\Delta p}$	T_s °F
8		0.87		
9		.87		
10		.85		
11		.87		
12		.86		
13		.86		
14		.86		
15		.84		
16		.81		
Total		-		
Average		-		

a) From outside of port to sampling point.

Pitot tube _____
Manometer _____
Thermometer _____

Data Recorder _____

Date _____

Stack Inside Dimensions _____

Stack Area, A_s = _____ sq. ft.

Barometric Pressure, P_b = _____ "Hg

Stack Gage Pressure = _____ "H_2O

Stack Abs. Pressure, P_s = _____ $\frac{\text{"}H_2O}{13.6}$ + P_b = _____ "Hg

Stack Gas Temp., T_s = _____ °F + 460 = _____ °R

Molecular Weight of Stack Gas, M_s = _____

$$V_s = 174 \sqrt{\Delta p}\ Cp \sqrt{T_s \times \frac{29.92}{P_s} \times \frac{29}{M_s}}\ \text{ft/min.}$$

V_s =

Q, Volume = _____ ft/min. x _____ sq. ft. = _____ cfm

Q_w, Standard Volume at 70°F and 29.92 "Hg (Wet Basis) =

$$Q \times \frac{530}{T_s} \times \frac{P_s}{29.92} = 17.7 \times \_\_\_\_ \times \_\_\_\_ = \_\_\_\_$$

$Q_s = Q_w \times (100-W)/100$ = _____

PEDCo-ENVIRONMENTAL
SUITE 8 • ATKINSON SQUARE
CINCINNATI, OHIO 45246
513/771-4330

GAS VELOCITY AND VOLUME DATA

Test No. Preliminary Traverse

Location Pellet Cooler Outlet Ralston Purin

VELOCITY TRAVERSE DATA

Point	Position Inches[a]	Reading, Δp "H_2O	$\sqrt{\Delta p}$	T_s °F
S-1	1.0	0.47		80
2	1.5	.55		
3	2.6	.57		
4	3.8	.60		
5	5.0	.61		
6	6.5	.58		
7	8.1	.52		
8	10.2	.52		
9	13.7	.54		
10	21.3	.57		
11	24.3	.56		
12	26.4	.56		
13	28.0	.57		
14	29.5	.60		
15	30.7	.61		
16	31.9	.61		
17	33.0	.57		
18	33.5	.56		
E-1				
2				
3				
4				
5				
Total		-		
Average		-		

Stack Inside Dimensions 34.5"

Stack Area, A_s = _____ sq. ft.

Barometric Pressure, P_b = 29.58 "Hg

Stack Gage Pressure = -0.42 "H_2O

Stack Abs. Pressure, P_s = _____ $\frac{\text{"}H_2O}{13.6}$ + P_b = _____ "H

Stack Gas Temp., T_s = _____ °F + 460 = _____ °R

Molecular Weight of Stack Gas, M_s = _____

$V_s = 174 \sqrt{\Delta p}\ Cp \sqrt{T_s \times \frac{29.92}{P_s} \times \frac{29}{M_s}}$ ft/min.

V_s =

Q, Volume = _____ ft/min. x _____ sq. ft. = _____ cf

Q_w, Standard Volume at 70°F and 29.92 "Hg (Wet Basis) =

$Q \times \frac{530}{T_s} \times \frac{P_s}{29.92}$ = 17.7 x _____ x _____ = _____

$Q_s = Q_w \times (100-W)/100$ = _____

a) From outside of port to sampling point.

Pitot tube S

Manometer

Thermometer DIAL

Data Recorder GF

Date 6 Nov, 1972

PEDCo-ENVIRONMENTAL
SUITE 8 • ATKINSON SQUARE
CINCINNATI, OHIO 45246
513/771-4330

NOMOGRAPH DATA

PLANT Ralston Purina, Louisville, Ky.

DATE 6 Nov. 72

SAMPLING LOCATION Pellet Cooler Inlet; Test 1, 3, & 5

CALIBRATED PRESSURE DIFFERENTIAL ACROSS ORIFICE, in. H_2O	$\Delta H_@$	1.85 @ 0.75 cfm
AVERAGE METER TEMPERATURE (AMBIENT + 20 °F), °F	$T_{m_{avg.}}$	90
PERCENT MOISTURE IN GAS STREAM BY VOLUME	B_{wo}	2
BAROMETRIC PRESSURE AT METER, in. Hg	P_m	29.55
STATIC PRESSURE IN STACK, in. Hg ($P_m \pm 0.073$ x STACK GAUGE PRESSURE in in. H_2O)	P_s	-1.2
RATIO OF STATIC PRESSURE TO METER PRESSURE	P_s/P_m	1.0
AVERAGE STACK TEMPERATURE, °F	$T_{s_{avg.}}$	90
AVERAGE VELOCITY HEAD, in. H_2O	$\Delta p_{avg.}$	.80
MAXIMUM VELOCITY HEAD, in. H_2O	$\Delta p_{max.}$	1.20
C FACTOR		1.1
CALCULATED NOZZLE DIAMETER, in.		.1875
ACTUAL NOZZLE DIAMETER, in.		.1875
REFERENCE Δp, in. H_2O		1.31

EPA (Dur) 234
4/72

NOMOGRAPH DATA

PLANT RALSTON PURINA

DATE 6 NOV. 72

SAMPLING LOCATION PELLET COOLER OUTLET: TESTS 2, 4, & 6

CALIBRATED PRESSURE DIFFERENTIAL ACROSS ORIFICE, in. H_2O	$\Delta H_@$	1.40 @ 0.75 cfm
ASSUMED AVERAGE METER TEMPERATURE (AMBIENT + 20 °F), °F	$T_{m_{avg.}}$	90
Assumed PERCENT MOISTURE IN GAS STREAM BY VOLUME	B_{wo}	2
BAROMETRIC PRESSURE AT METER, in. Hg	P_m	29.58
STATIC PRESSURE IN STACK, in. Hg ($P_m \pm 0.073$ x STACK GAUGE PRESSURE in in. H_2O)	P_s	−0.42
RATIO OF STATIC PRESSURE TO METER PRESSURE	P_s/P_m	1.0
AVERAGE STACK TEMPERATURE, °F	$T_{s_{avg.}}$	90
AVERAGE VELOCITY HEAD, in. H_2O	$\Delta p_{avg.}$	0.60
MAXIMUM VELOCITY HEAD, in. H_2O	$\Delta p_{max.}$	0.68
C FACTOR		0.82
CALCULATED NOZZLE DIAMETER, in.		★ .1875 - TEST 2 - .250 - TESTS 4 & 6
ACTUAL NOZZLE DIAMETER, in.		" "
REFERENCE Δp, in. H_2O		1.78

EPA (Dur) 234
4/72

★ Nomograph indicated .250" nozzle; however, .1875 in. nozzle was used on first run to ensure that the ~~meter~~ pump could pull the required flow for isokinetic maintenance.

NOMOGRAPH DATA

PLANT RALSTON PURINA - Louisville, Ky.

DATE 7 Nov. 72

SAMPLING LOCATION HAMMERMILL OUTLET TESTS 7,8,~~9~~

CALIBRATED PRESSURE DIFFERENTIAL ACROSS ORIFICE, in. H_2O	$\Delta H_@$	1.40
ASSUMED AVERAGE METER TEMPERATURE (AMBIENT + 20 °F), °F	$T_{m_{avg.}}$	110
ASSUMED PERCENT MOISTURE IN GAS STREAM BY VOLUME	B_{wo}	2
BAROMETRIC PRESSURE AT METER, in. Hg	P_m	29.20
STATIC PRESSURE IN STACK, in. Hg ($P_m \pm 0.073$ x STACK GAUGE PRESSURE in in. H_2O)	P_s	-.27
RATIO OF STATIC PRESSURE TO METER PRESSURE	P_s/P_m	1.0
AVERAGE STACK TEMPERATURE, °F	$T_{s_{avg.}}$	70
AVERAGE VELOCITY HEAD, in. H_2O	$\Delta p_{avg.}$	0.80
MAXIMUM VELOCITY HEAD, in. H_2O	$\Delta p_{max.}$	1.70
C FACTOR		0.86
CALCULATED NOZZLE DIAMETER, in.		.1875
ACTUAL NOZZLE DIAMETER, in.		.1875
REFERENCE Δp, in. H_2O		1.65

EPA (Dur) 234
4/72

APPENDIX E

SAMPLING PROCEDURES

DETERMINATION OF PARTICULATE EMISSIONS FROM STATIONARY SOURCES

INTRODUCTION

The following method was used in this test program. Sampling and analytical procedures followed those described in the Federal Register.[1]

SAMPLING APPARATUS

The particulate sampling train in the procedure used in these tests met design specifications established by the EPA.

Nozzle - Stainless steel (316) with sharp, tapered leading edge.

Probe - Pyrex glass with a heating system capable of maintaining a minimum gas temperature of 250°F at the exit end during sampling and prevent condensation from occurring. No heating of the probe was done in this test.

Pitot Tube - Type S attached to probe to monitor stack gas velocity.

Filter Holder - Pyrex glass with heating system capable of maintaining minimum temperature of 225°F. No heating of the probe was done in these tests.

---

1. Federal Register, Vol. 36, No. 247, Part II - Thursday, Dec. 23, 1971.

Impingers - Four impingers connected in series with glass ball joints. The first, third, and fourth impingers were of the Greenburg-Smith design, modified by replacing the tip with a 1/2 inch I.D. glass tube extending to 1/2 inch from the bottom of the flask. The second impinger was of the Greenburg-Smith design with a standard tip.

Metering System - Vacuum gauge, leak-free pump, thermometers capable of measuring temperature to within 5°F, dry gas meter with 2% accuracy, and related equipment, or equivalent, as needed to maintain an isokinetic sampling rate and to determine sample volume.

Barometer - To measure atmospheric pressures to ± 0.1 inches Hg.

SAMPLING PROCEDURE

After selecting the sampling site and the minimum number of traverse points, the stack pressure, temperature, moisture, and range of velocity head were measured according to procedures described in Method 1 of the Federal Register (December 23, 1971).

Approximately 200 grams of silica gel was weighed in a sealed impinger prior to each test. Glass fiber filters* (3" diameter) were desiccated for at least 24 hours and

* MSA 1106 BH

weighed to the nearest 0.1 mg. One-hundred ml. of distilled water was placed in each of the first two impingers; the third impinger was initially empty; and the impinger containing the silica gel was placed next in series. The train was set up without the probe as shown in Figure A-1. The sampling train was leak checked at the sampling site by plugging the inlet to the filter holder and pulling a 15 in. Hg vacuum. Leakage rates of less than 0.02 cfm at a vacuum of 15 in. Hg were recorded in all cases. The probe assembly was then attached and crushed ice was placed around the impingers. More ice was added during the run to keep the temperature of the gases leaving the last impinger at approximately 70°F.

During sampling, the data required on the meter data sheet was recorded at each sampling point and when significant changes in stack flow conditions required additional adjustments in flow rate. Isokinetic sampling rates were set throughout the sampling period with the aid of a nomograph

SAMPLE RECOVERY PROCEDURE

The sampling train was moved carefully from the test site to the cleanup area at the plant. Samples of the acetone and water used in the sample recovery were taken for use as blanks. The sample fractions were recovered as follows:

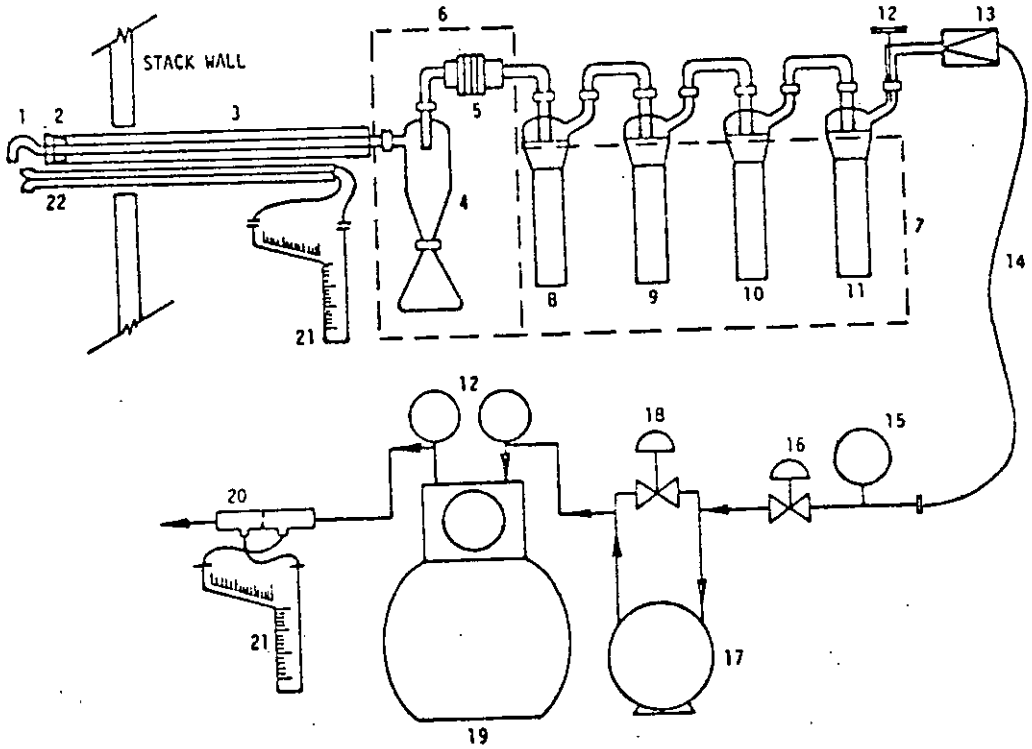

1. - S. S. Nozzle
2. - S. S. Union
3. - Probe
4. - Cyclone (Optional)
5. - Glass Filter Holder
6. - Heated Box
7. - Ice Bath
8. - Modified G-S Imp.
9. - G-S Impinger
10. - Modified G-S Imp.
11. - Modified G-S Imp.
12. - Thermometers
13. - Check Valve
14. - Umbilical Cord
15. - Vacuum Gauge
16. - Valve
17. - Leak-Free Pump
18. - By-Pass Valve
19. - Dry Gas Test Meter
20. - Orifice
21. - Dual Manometer
22. - S Pitot Tube

Figure A-1 Particulate Sampling Train

Container No. 1 - The filter was removed from its holder and placed in a petri dish and sealed.

Container No. 2 - Loose particulate and acetone washings from all sample-exposed surface prior to the filter were placed in a glass jar and sealed.

Container No. 3 - The condensate from the first three Greenburg-Smith impingers was measured within ± 1 ml. and placed into a glass jar. Water rinsings from the back half of the filter holder, the fritted glass support, all connectors, and the first three Greenburg-Smith impingers were placed in this container and the container sealed with tape.

Container No. 4 - Acetone rinsings from the back half of the filter holder, the fritted glass support, all connectors, and the first three Greenburg-Smith impingers were placed in this container and sealed.

The silica gel from the fourth impinger was weighed and recorded. The used silica gel was discarded.

ANALYTICAL PROCEDURES

All data was recorded on the Analytical Data Sheets included in Appendix F. The following procedures were used and followed the methods described in the Federal Register of August 17, 1971.[1]

Container No. 1 - The filter and any loose particulate matter from this sample container was placed into tared glass weighing dish, desiccated to a constant weight and weighed to the nearest 0.1 mg.

---

1. Federal Register August 17, 1971, Vol. 36, No. 159 Part II, Pg. 15717.

Container No. 2 - The acetone washings were transferred to a tared beaker and evaporated to dryness at ambient temperature and pressure; desiccated to a constant weight; and weighed to the nearest 0.1 mg.

Container No. 3 - Organic matter from the impinger solution was extracted with three 25 ml. portions each of ethyl ether and chloroform. The extracts were combined into a tared beaker; evaporated until no solvent remained at about 70°F. The sample was then desiccated to a constant weight and weighed to the nearest 0.1 mg. The remaining water was evaporated by boiling in a tared beaker, and the residue weighed.

Container No. 4 - The acetone washings from the back half of the filter holder, fritted support, connectors and first three Greenburg-Smith impingers were transferred to a tared beaker, and evaporated to dryness at ambient temperature and pressure. The sample was then desiccated to a constant weight and weighed to the nearest 0.1 mg.

The total particulate weight was obtained by totaling the weights of the individual sample components. The front half of the sample consisted only of the filter and probe washings. All liquid fractions were corrected for acetone and distilled water blank values.

APPENDIX F

LABORATORY REPORT

CASCADE® L1-C2462 RALSTON PURINA CO. PN 3082-0 PRINTED IN U.S.A.

	SAMPLE DESCRIPTION	EPA NO. 72-001	WT GROSS	WT TARE	WT FILTER	WT NET	Vol. ml
Filters	1 PELLET COOLER INLET	934 53	.3106 .3106	.3105		.0001	—
	2 PELLET COOLER OUTLET	938 56	.3110 .3110	.3108		.0002	—
	3 PELLET COOLER INLET	942 55	1.5960 1.5960	.3366		1.2594	—
	4 PELLET COOLER OUTLET	946 50	.3189 .3189	.3125		.0064	—
	5 PELLET COOLER INLET	950 60	.3412 .3412	.3389		.0023	—
	6 PELLET COOLER OUTLET	954 58	.3115 .3115	.3106		.0009	—
	7 HAMMERMILL OUTLET	958 59	.3434 .3434	.3408		.0026	—
	8 HAMMERMILL OUTLET	962 61	.3131 .3131	.3102		.0029	—
	9 HAMMERMILL OUTLET	966 62	.3087 .3087	.3081		.0006	—
Water	1 PELLET COOLER INLET	935 ✓	98.8324 98.8320	96.8792		1.9530	465
	2 " " OUTLET	939 ✓	96.5257 96.5265	96.4637		.0624	240
	3 " " INLET	943 ✓	99.1875 99.1870	98.3756		.8117	460
	4 " " OUTLET	947 ✓	98.6123 98.6129	98.5177		.0949	400
	5 " " INLET	951 ✓	101.2431 101.2432	98.6820		2.5611	560
	6 " " OUTLET	955 ✓	96.9779 96.9788	96.8860		.0924	235
	7 HAMMERMILL "	959 ✓	94.6996 94.7006	94.5691		~~.1307~~ .1310	365
	8 " "	963 ✓	98.9258 98.9269	98.8700		.0564	340
	9 " "	967 ✓	96.1928 96.1934	96.1426		.0505	255
Organic Fraction	1 PELLET COOLER INLET	936-O	98.3876 98.3879	98.3839		.0039	495
	2 " " OUTLET	940-O	97.8535 97.8539	97.8509		.0028	450
	3 " " INLET	944-O	96.3508 96.3514	96.3465		.0046	390
	4 " " OUTLET	948-O	106.3886 106.3882	106.3839		.0045	375
	5 " " INLET	952-O	94.5722 94.5718	94.5672		.0048	485
	6 " " OUTLET	956-O	103.9872 103.9868	103.9838		.0032	530
	7 HAMMERMILL "	960-O	98.5712 98.5720	98.5667		.0049	450
	8 " "	964-O	95.4012 95.4007	95.3980		.0030	555
	9 " "	968-O	99.1213 99.1208	99.1187		.0024	590
Inorganic Fraction	1 PELLET COOLER INLET	✓936-I	99.9964 99.9970	99.9892		.0075	495
	2 " " OUTLET	✓940-I	104.9878 104.9878	104.9783		.0095	450
	3 " " INLET	✓944-I	97.8155 97.8155	97.8075		.0080	390
	4 " " OUTLET	✓948-I	106.0976 106.0967	106.0893		.0079	375
	5 " " INLET	✓952-I	101.4192 101.4189	101.4124		.0067	485
	6 " " OUTLET	✓956-I	100.8790 100.8797	100.8740		.0054	530
	7 HAMMERMILL "	✓960-I	100.6964 100.6973	100.6907		.0062	450
	8 " "	✓964-I	99.6991 99.6995	99.6932		.0061	555
	9 " "	✓968-I	96.4687 96.4692	96.4615		.0075	590

SAMPLE DESCRIPTION	EPA NO. 72-001	WT GROSS,	WT GROSS$_2$	WT TARE	WT NET	VOL(ML)
1 PELLET COOLER INLET	937 ✓	99.7158	99.7167	99.6880	.0333	210
2 " " OUTLET	941 ✓	102.1721	102.1725	102.1463	.0260	98
3 " " INLET	945 ✓	99.6486	99.6482	99.6141	.0343	230
4 " " OUTLET	949 ✓	100.4145	100.4149	100.3767	.0380	185
5 " " INLET	953 ✓	101.6173	101.6173	101.5946	.0227	235
6 " " OUTLET	957 ✓	99.4034	99.4039	99.3766	.0271	275
7 HAMMERMILL "	961 ✓	101.5584	101.5580	101.5244	.0338	300
8 " "	965 ✓	100.3452	100.3458	100.3337	.0118	370
9 " "	969 ✓	99.4558	99.4561	99.4441	.0119	335
ACETONE BLANK		102.0881	102.0883	102.0858	.0024	500
H_2O BLANK	1.6 mg/l	103.2665	103.2665	103.2657	.0008	500
H_2O	1.6 mg/l					
ACETONE	4.8 mg/l					

PEDCo-ENVIRONMENTAL
SUITE 8 • ATKINSON SQUARE
CINCINNATI, OHIO 45246

ANALYTICAL DATA

PLANT RALSTON PURINA LOUISVILLE COMMENTS:
DATE NOV. 6, 1972
SAMPLING LOCATION PELLET COOLER - INLET
SAMPLE TYPE PARTICULATE
RUN NUMBER 1
SAMPLE BOX NUMBER —
CLEAN-UP MAN R. GERSTLE

FRONT HALF

LABORATORY RESULTS

ACETONE WASH OF NOZZLE, PROBE, CYCLONE (BYPASS), FLASK, FRONT HALF OF FILTER HOLDER

1953.0-2.2
CONTAINER 72-001-935 1950.8 mg

FILTER NUMBER 200053

CONTAINER 72-001-934 0.1 mg

Cyclone used on only this run.

FRONT HALF SUBTOTAL 1950.9 mg

BACK HALF

IMPINGER CONTENTS AND WATER WASH OF IMPINGERS, CONNECTORS, AND BACK HALF OF FILTER HOLDER

7.5-.8
CONTAINER 72-001-936I 6.7 mg
ETHER-CHLOROFORM EXTRACTION 72-001-936O 3.9 mg

ACETONE WASH OF IMPINGERS, CONNECTORS, AND BACK HALF OF FILTER HOLDER

CONTAINER 72-001-937 32.3 mg
33.3-1.0

BACK HALF SUBTOTAL 42.9 mg

TOTAL WEIGHT 1993.8 mg

MOISTURE

IMPINGERS
FINAL VOLUME 216 ml (~~160~~)
INITIAL VOLUME ~~200~~ ml
NET VOLUME 16 ml

SILICA GEL (TARE 452.2)
FINAL WEIGHT 676.4 g
INITIAL WEIGHT 652.2 g
NET WEIGHT 24.2 g

TOTAL MOISTURE 40.2 g

PEDCo-ENVIRONMENTAL
SUITE 8 • ATKINSON SQUARE
CINCINNATI, OHIO 45246

ANALYTICAL DATA

PLANT RALSTON PURINA LOUISVILLE COMMENTS:

DATE 6 NOV. 72

SAMPLING LOCATION PELLET COOLER OUTLET

SAMPLE TYPE PARTICULATE

RUN NUMBER 2

SAMPLE BOX NUMBER —

CLEAN-UP MAN R. W. GERSTLE

FRONT HALF

LABORATORY RESULTS

ACETONE WASH OF NOZZLE, PROBE, CYCLONE (BYPASS), ~~FLASK~~, FRONT HALF OF FILTER HOLDER — CONTAINER 72-001-939 (62.4 − 1.1) 61.3 mg

FILTER NUMBER ~~[illegible]~~ 200056 — CONTAINER 72-001-938 0.2 mg

FRONT HALF SUBTOTAL 61.5 mg

BACK HALF

IMPINGER CONTENTS AND WATER WASH OF IMPINGERS, CONNECTORS, AND BACK HALF OF FILTER HOLDER — CONTAINER 72-001-940 I (9.5 − .7) 8.8 mg

ETHER-CHLOROFORM EXTRACTION 72-001-940 O 2.8 mg

ACETONE WASH OF IMPINGERS, CONNECTORS, AND BACK HALF OF FILTER HOLDER — CONTAINER 72-001-941 (26.0 − 0.5) 25.5 mg

BACK HALF SUBTOTAL 37.1 mg

TOTAL WEIGHT 98.6 mg

MOISTURE

IMPINGERS
FINAL VOLUME 210 ml (162) ≈ 50cc spilled
INITIAL VOLUME 200 ml
NET VOLUME ~10 ml

SILICA GEL (446.7 TARE)
FINAL WEIGHT 660.0 g
INITIAL WEIGHT 646.7 g
NET WEIGHT 23.3 g

TOTAL MOISTURE 33.3 g

PEDCo-ENVIRONMENTAL
SUITE 8 • ATKINSON SQUARE
CINCINNATI, OHIO 45246

ANALYTICAL DATA

PLANT RALSTON

DATE

SAMPLING LOCATION PELLET COOLER - INLET

SAMPLE TYPE PART.

RUN NUMBER 3

SAMPLE BOX NUMBER —

CLEAN-UP MAN R.W. GERSTE

COMMENTS:

FRONT HALF

LABORATORY RESULTS

ACETONE WASH OF NOZZLE, PROBE, CYCLONE (BYPASS), [redacted], FRONT HALF OF FILTER HOLDER

811.7 - 2.2
CONTAINER 72-001-943 809.5 mg

FILTER NUMBER 200056

CONTAINER 72-001-942 1259.4 mg

FRONT HALF SUBTOTAL 2068.9 mg

BACK HALF

IMPINGER CONTENTS AND WATER WASH OF IMPINGERS, CONNECTORS, AND BACK HALF OF FILTER HOLDER

8.0 - .7
CONTAINER 72-001-944-5 6.3 mg

ETHER-CHLOROFORM EXTRACTION 72-001-944-0 4.6 mg

ACETONE WASH OF IMPINGERS, CONNECTORS, AND BACK HALF OF FILTER HOLDER

CONTAINER 72-001-945 33.2 mg
34.3 - 1.1

BACK HALF SUBTOTAL 44.1 mg

TOTAL WEIGHT 2113.0 mg

MOISTURE

IMPINGERS
FINAL VOLUME 218 ml
INITIAL VOLUME 200 ml
NET VOLUME 18 ml

SILICA GEL
FINAL WEIGHT 700.9 g
INITIAL WEIGHT 684.3 g
NET WEIGHT 16.6 g

TOTAL MOISTURE 34.6 g

PEDCo-ENVIRONMENTAL
SUITE 8 • ATKINSON SQUARE
CINCINNATI, OHIO 45246

ANALYTICAL DATA

PLANT RALSTON

DATE

SAMPLING LOCATION PELLET COOLER-OUTLET

SAMPLE TYPE PART

RUN NUMBER 4

SAMPLE BOX NUMBER —

CLEAN-UP MAN R.W. GERSTLE

COMMENTS:

FRONT HALF

LABORATORY RESULTS

ACETONE WASH OF NOZZLE, PROBE, CYCLONE (BYPASS), FLASK, FRONT HALF OF FILTER HOLDER

94.9 - 1.9

CONTAINER 72-001-947 93.0 mg

FILTER NUMBER ~~200050~~ 200054

CONTAINER 72-001-946 6.4 mg

FRONT HALF SUBTOTAL 99.4 mg

BACK HALF

IMPINGER CONTENTS AND WATER WASH OF IMPINGERS, CONNECTORS, AND BACK HALF OF FILTER HOLDER

7.9 - 0.6

CONTAINER 72-001-948-I 7.3 mg

ETHER-CHLOROFORM EXTRACTION 72-001-948-O 4.5 mg

ACETONE WASH OF IMPINGERS, CONNECTORS, AND BACK HALF OF FILTER HOLDER

CONTAINER 72-001-949 37.1 mg

38.0 - 0.9

BACK HALF SUBTOTAL 48.9 mg

TOTAL WEIGHT 148.3 mg

MOISTURE

IMPINGERS

FINAL VOLUME 212 ml

INITIAL VOLUME 200 ml

NET VOLUME 12 ml

SILICA GEL

FINAL WEIGHT 716.5 g

INITIAL WEIGHT 682.9 g

NET WEIGHT 33.6 g

TOTAL MOISTURE 45.6 g

PEDCo-ENVIRONMENTAL
SUITE 8 • ATKINSON SQUARE
CINCINNATI, OHIO 45246

ANALYTICAL DATA

PLANT RALSTON

DATE 11-6-72

SAMPLING LOCATION PELLET COOLER-~~INLET~~ INLET

SAMPLE TYPE PART

RUN NUMBER B5IN

SAMPLE BOX NUMBER —

CLEAN-UP MAN R.W. GERSTE

COMMENTS:

FRONT HALF

LABORATORY RESULTS

ACETONE WASH OF NOZZLE, PROBE, CYCLONE (BYPASS), FLASK, FRONT HALF OF FILTER HOLDER — 2561.1 − 2.7 CONTAINER 72-001-951 — 2558.4 mg

FILTER NUMBER 200060 — CONTAINER 72-001-950 — 2.3 mg

FRONT HALF SUBTOTAL 2560.7 mg

BACK HALF

IMPINGER CONTENTS AND WATER WASH OF IMPINGERS, CONNECTORS, AND BACK HALF OF FILTER HOLDER — 6.7 − 0.8 CONTAINER 72-001-952-I — 5.9 mg

ETHER-CHLOROFORM EXTRACTION 72-001-952-O — 4.8 mg

ACETONE WASH OF IMPINGERS, CONNECTORS, AND BACK HALF OF FILTER HOLDER — CONTAINER 72-001-953 — 21.6 mg

22.7 − 1.1

BACK HALF SUBTOTAL 32.3 mg

TOTAL WEIGHT 2593.0 mg

MOISTURE

IMPINGERS

FINAL VOLUME 212 ml

INITIAL VOLUME 200 ml

NET VOLUME 12 ml

SILICA GEL

FINAL WEIGHT 629.7 g

INITIAL WEIGHT 603.1 g

NET WEIGHT 26.6 g

TOTAL MOISTURE 38.6 g

ANALYTICAL DATA

PLANT RALSTON

DATE NOV. 6, 1972

SAMPLING LOCATION PELLET COOLER OUTLET

SAMPLE TYPE PART

RUN NUMBER 6 OUT

SAMPLE BOX NUMBER

CLEAN-UP MAN RG + GF

COMMENTS:

FRONT HALF

LABORATORY RESULTS

ACETONE WASH OF NOZZLE, PROBE, CYCLONE (BYPASS), FLASK, FRONT HALF OF FILTER HOLDER

CONTAINER 72-001-955 (92.4 - 1.1) 91.3 mg

FILTER NUMBER 200058

CONTAINER 72-001-954 0.9 mg

FRONT HALF SUBTOTAL 92.2 mg

BACK HALF

IMPINGER CONTENTS AND WATER WASH OF IMPINGERS, CONNECTORS, AND BACK HALF OF FILTER HOLDER

CONTAINER 72-001-956-I (5.4 - 0.8) 4.6 mg

ETHER-CHLOROFORM EXTRACTION 72-001-956-O 3.2 mg

ACETONE WASH OF IMPINGERS, CONNECTORS, AND BACK HALF OF FILTER HOLDER

CONTAINER 72-001-957 (27.1 - 1.3) 25.8 mg

BACK HALF SUBTOTAL 33.6 mg

TOTAL WEIGHT 125.8 mg

MOISTURE

IMPINGERS

FINAL VOLUME 205 ml

INITIAL VOLUME 200 ml

NET VOLUME 5 ml

SILICA GEL ~642.6

FINAL WEIGHT	X g	g	g
INITIAL WEIGHT	592.6 g	g	g
NET WEIGHT	~50 g	g	g

TOTAL MOISTURE ~55 g

Silica Gel impinger
Broken after run (bottom fell out)

ANALYTICAL DATA

PLANT RALSTON PURINA-LOUISVILLE COMMENTS:

DATE 7 NOV. 1972

SAMPLING LOCATION HAMMERMILL OUTLET

SAMPLE TYPE PARTICULATE

RUN NUMBER 7

SAMPLE BOX NUMBER

CLEAN-UP MAN

FRONT HALF

		LABORATORY RESULTS
ACETONE WASH OF NOZZLE, PROBE, CYCLONE (BYPASS), FLASK, FRONT HALF OF FILTER HOLDER	CONTAINER 72-001-959 (131.0-1.8)	129.2 mg
FILTER NUMBER 200-059	CONTAINER 72-001-958	2.6 mg
FRONT HALF SUBTOTAL		131.8 mg

BACK HALF

IMPINGER CONTENTS AND WATER WASH OF IMPINGERS, CONNECTORS, AND BACK HALF OF FILTER HOLDER	CONTAINER 72-001-960-I (6.2-0.7)	5.5 mg
	ETHER-CHLOROFORM EXTRACTION 72-001-960-O	4.9 mg
ACETONE WASH OF IMPINGERS, CONNECTORS, AND BACK HALF OF FILTER HOLDER	CONTAINER 72-001-961	32.4 mg
	BACK HALF SUBTOTAL	42.8 mg
	TOTAL WEIGHT	174.6 mg

MOISTURE

IMPINGERS

FINAL VOLUME	200 ml	
INITIAL VOLUME	200 ml	
NET VOLUME	ml	

SILICA GEL

FINAL WEIGHT	239.0* g	g	g
INITIAL WEIGHT	209.4 g	g	g
NET WEIGHT	29.6 g	g	g

TOTAL MOISTURE 29.6 g

* weighed 12 hrs. after test

PEDCo-ENVIRONMENTAL
SUITE 8 • ATKINSON SQUARE
CINCINNATI, OHIO 45246

ANALYTICAL DATA

PLANT RALSTON - PURINA - LOUISVILLE COMMENTS:

DATE 7 NOV. 72

SAMPLING LOCATION HAMMERMILL OUTLET

SAMPLE TYPE PARTICULATE

RUN NUMBER 8

SAMPLE BOX NUMBER —

CLEAN-UP MAN G. FORTE & E. MEER

FRONT HALF

LABORATORY RESULTS

ACETONE WASH OF NOZZLE, PROBE, CYCLONE (BYPASS), FLASK, FRONT HALF OF FILTER HOLDER — 56.4 − 1.6 CONTAINER 72-001-963 54.8 mg

FILTER NUMBER 200,061 — CONTAINER 72-001-962 2.9 mg

FRONT HALF SUBTOTAL 57.7 mg

BACK HALF

IMPINGER CONTENTS AND WATER WASH OF IMPINGERS, CONNECTORS, AND BACK HALF OF FILTER HOLDER — 6.1 − 0.9 CONTAINER 72-001-964-I 5.2 mg

ETHER-CHLOROFORM EXTRACTION 72-001-964-O 3.0 mg

ACETONE WASH OF IMPINGERS, CONNECTORS, AND BACK HALF OF FILTER HOLDER — CONTAINER 72-001-965 10.0 mg

11.8 − 1.8

BACK HALF SUBTOTAL 18.2 mg

TOTAL WEIGHT 75.9 mg

MOISTURE

IMPINGERS

FINAL VOLUME 200 ml

INITIAL VOLUME 200 ml

NET VOLUME ____ ml

SILICA GEL

FINAL WEIGHT 678.6 g ____ g ____ g

INITIAL WEIGHT 663.5 g ____ g ____ g

NET WEIGHT 15.1 g ____ g ____ g

TOTAL MOISTURE 15.1 g

PEDCo-ENVIRONMENTAL
SUITE 8 • ATKINSON SQUARE
CINCINNATI, OHIO 45246

ANALYTICAL DATA

PLANT RALSTON PURINA
DATE 7 NOV. 72
SAMPLING LOCATION HAMMERMILL
SAMPLE TYPE PARTICULATE
RUN NUMBER 09
SAMPLE BOX NUMBER —
CLEAN-UP MAN G. FORTE & E. MEER

COMMENTS:

FRONT HALF

LABORATORY RESULTS

ACETONE WASH OF NOZZLE, PROBE, CYCLONE (BYPASS), FLASK, FRONT HALF OF FILTER HOLDER

50.5 − 1.2
CONTAINER 72-001-967 49.3 mg

FILTER NUMBER 200,062

CONTAINER 72-001-966 0.6 mg

FRONT HALF SUBTOTAL 49.9 mg

BACK HALF

IMPINGER CONTENTS AND WATER WASH OF IMPINGERS, CONNECTORS, AND BACK HALF OF FILTER HOLDER

7.5 − 0.9
CONTAINER 72-001-968-I 6.6 mg
ETHER-CHLOROFORM EXTRACTION 72-001-968-O 2.4 mg

ACETONE WASH OF IMPINGERS, CONNECTORS, AND BACK HALF OF FILTER HOLDER

CONTAINER 72-001-969 10.3 mg

11.9 − 1.6
BACK HALF SUBTOTAL 19.3 mg

TOTAL WEIGHT 69.2 mg

MOISTURE

IMPINGERS
FINAL VOLUME 200 ml
INITIAL VOLUME 200 ml
NET VOLUME ml

SILICA GEL
FINAL WEIGHT 667.5 g g g
INITIAL WEIGHT 648.4 g g g
NET WEIGHT 19.1 g g g

TOTAL MOISTURE 19.1 g

APPENDIX G. TEST LOG

Personnel:	EPA:	Tom Ward, Project Officer
		Bill Mitchell
		Roy Neulicht
		Ken Woodard
	PEDCo:	R. Amick
		R. Gerstle
		E. Meer
		G. Forte
	Ralston Purina:	J. Ballentine

DATE	TIME	EVENT
11/6/72	800	PEDCo crew arrives at Ralston Purina Feed Plant in Louisville, Kentucky
	800-1320	Preparation for tests on pellet cooler cyclone
	1320-1536	Tests 1 and 2 on pellet cooler cyclone
	1625-1740	Tests 3 and 4 on pellet cooler cyclone
	1920-2140	Tests 5 and 6 on pellet cooler cyclone 13-15 minute break after one hour to change product
	1920-2140	Tests 5 and 6 on pellet cooler cyclone
11/7/72	800	PEDCo crew arrival at plant
	800-1230	Preparation for hammermill cyclone tests (in cold rain)
	1100-1330	R. Gerstle and G. Forte return to Cincinnati
	1230-1330	First half of test 7 on hammermill cyclone
	1330-1430	Lunch
	1430-1500	Finish Test 7

DATE	TIME	EVENT
11/7/72	1620-1700	Test 8 on Hammermill cyclone
	1830-1940	Test 9 on Hammermill cyclone
	1940-2100	Clean up trains
11/8/72	800-1100	Clean up test area, pack equipment, load truck.
	1100-1200	Lunch
	1200-1400	Drive van to Cincinnati

APPENDIX I. PROJECT PARTICIPANTS AND TITLES

Ralston Purina Co.
Louisville, Kentucky

EPA (OAP)

- Tom Ward - Project Officer, ETB
- Ken Woodard - Chemical Engineer, ESED
- Bill Mitchell - QAMEL
- Roy Neulicht - ETB

Ralston Purina

- Jim Ballentine - Plant Manager

PEDCo

- R. Gerstle, P.E. - Engineering Supervisor and Field Supervisor
- R. Amick - Environmental Engineer and Assistant Field Supervisor
- G. Forte - Technician
- E. Meer - Technician