Note: This is a reference cited in *AP 42, Compilation of Air Pollutant Emission Factors, Volume I Stationary Point and Area Sources.* AP42 is located on the EPA web site at www.epa.gov/ttn/chief/ap42/

The file name refers to the reference number, the AP42 chapter and section. The file name "ref02_c01s02.pdf" would mean the reference is from AP42 chapter 1 section 2. The reference may be from a previous version of the section and no longer cited. The primary source should always be checked.

AP42 Section:	9.9.1
Reference:	19
Title:	Emission Factors For Grain Elevators, Final Report to National Grain and Feed Foundation, Midwest Research Institute, Kansas City, Missouri, January, 1997.

check on #19

MRI REPORT

Emission Factors for Grain Elevators

Final Report

For National Grain and Feed Foundation
1201 New York Avenue, NW, Suite 830
Washington, D.C. 20005

Attn.: Thomas O'Connor

MRI Project Nos. 3889 and 4671

January 3, 1997

MIDWEST RESEARCH INSTITUTE 425 Volker Boulevard, Kansas City, MO 64110-2299 • (816) 753-7600

Preface

This report describes the results of a field-testing program conducted for the National Grain and Feed Foundation. Mr. Thomas O'Connor served as technical monitor for the program. Dr. Gregory E. Muleski and Mr. Gary Garman are the authors of this report. The assistance of Farmers Cooperative Association, Cargill, and Continental Grain is gratefully acknowledged.

Approved for:

MIDWEST RESEARCH INSTITUTE

Thomas J. Grant, Ph.D., P.E.
Director
Applied Engineering

January 3, 1997

Contents

Preface ii
Figures iv
Tables v
Executive Summary vi

1 Introduction 1

2 Test Site/Source Selection and Scheduling 6

3 Test Results 16

4 Discussion of Results 31

5 References 34

Appendix—Measured Control Effectiveness

Figures

1. Schematic Diagram of Exposure Profiling Concept 8
2. High-volume Cyclone Preseparator 9
3. Schematic Diagram Showing How Internal Tests Were Conducted 11
4. Sampler Deployment Used for Test Series BD-1 through -11 18
5. Floor Plan for BD-101 Test Series 19
6. Sampler Deployment for Test Series BD-102 through -123 20
7. Sampler Deployment Used for Test Series BE-1 through -9 22
8. Sampler Deployment for Test Series BE-101 23
9. Sampler Deployment for Test Series BE-201 to 202 23
10. Floor Plans for BF-1 Test Series 24
11. Sampler Deployment for Test Series BF-1 through 8 25

Tables

1. Test Matrix 4
2. Quality Assurance Procedures for Sampling Media 12
3. Quality Assurance Procedures for Sampling Equipment 12
4. Test Series 16
5. Uncontrolled PM10 Emission Factors (lb/ton) 26
6. Controlled PM10 Emission Factors (lb/ton) 28
7. Uncontrolled TP Emission Factors (lb/ton) 29
8. Controlled TP Emission Factors (lb/ton) 30
9. Summary of Uncontrolled PM10 Emission Factors 32
10. Summary of Uncontrolled TP Emission Factors 33

Executive Summary

Background

In 1994, the National Grain and Feed Association (NGFA) raised concerns that the data used to establish emission factors likely overstated emissions from uncontrolled grain handling operations. NGFA noted that most current emission factors were based upon dust concentrations measured at the inlet of a cyclone or fabric filter dust collector. These measurements reflect the amount of dust that can be stripped from a grain stream rather than the dust that occurs from an uncontrolled operation.

To help address this problem, the NGFA's National Grain and Feed Foundation (NGFF) retained Midwest Research Institute (MRI) to gather uncontrolled emission data at country and terminal grain elevators. MRI performed the actual research with the U.S. Environmental Protection Agency (EPA) reviewing and commenting on the research protocol. Field measurement was performed in the late summer and fall of 1995. This report provides a description of the tests performed; the data gathered during the testing; and the recommended new emission factors for grain elevators.

Report Summary and Conclusions

Testing was performed at one country elevator and two terminal elevators located within driving distance of MRI's Kansas City headquarters. The elevators handled wheat, corn, soybeans and sorghum. Historically, these four grains represent more than 92% of the grains and oilseeds grown in the United States. Thus, tests using these four grains are representative of typical emissions at elevators receiving and shipping grain by rail and/or truck.

The research program represented a cooperative effort between EPA and industry. A total of 54 tests were performed using an EPA-endorsed testing technique called "exposure profiling." Exposure profiling requires simultaneous multipoint sampling over the effective cross-section of the dust source plume. The method relies on a mass balance scheme similar to EPA reference methods to test conventional ducted sources. Importantly, EPA recommended this sampling technique as a more accurate method of developing uncontrolled emission factors than relying on dust concentrations at the inlet of control devices.

Using exposure profiling, data were gathered for dust emissions from the grain elevator building and from the unloading/loading of trucks and railcars. Test focused on PM10 emissions because that size range forms the basis for the National Ambient Air

Quality Standards (NAAQS) for particulate matter. Furthermore, EPA considers PM10 as the regulated pollutant when determining applicability of the Title V permitting program.

Testing found that uncontrolled emissions were indeed significantly lower than the AP-42 factors contained either in Supplement B (dated September 1988) or in the May 1994 report. Furthermore, for a specific handling operation, tests showed little difference in the amount of dust between different grains. Thus, the data support the recommendation to combine grains into a single emission factor for a specific grain handling operation. A new set of PM10 emission factors for grain operations is recommended based on this research. These factors agree well with "interim" emission factors for grain elevators published by EPA in November 1995.

Some data were gathered on total particulate (TP) matter emitted from grain handling operations. These tests confirmed that, unlike PM10, TP measurements are dependent on sampler location because TP rapidly precipitates out of the atmosphere. Therefore, TP emission factors are not a reliable indicator of the likely magnitude of particulate matter emitted by a grain elevator into the ambient atmosphere because sampler location and rapid settling can introduce wide variability into the measurements.

Additional testing was performed to confirm the ability of vegetable and food grade mineral oil to control dust emissions from grain handling operations. Although there were some problems with preliminary tests due to improper application, test results show that oil addition systems can typically achieve control efficiencies between 60% and 80% when oil is properly applied. Controlled test results are discussed in the Appendix.

Section 1
Introduction

In May 1994, the Agency issued a draft revision of the *Compilation of Air Pollutant Emission Factors* (AP-42). The May 1994 report—"Emission Factor Documentation for AP-42 Section 9.9.1"—proposed revised emission factors for grain elevators, mills and processing facilities. The National Grain and Feed Association (NGFA) raised concerns that the data used to establish emission factors likely overstated emissions from uncontrolled grain handling operations.

Specifically, both the emission factors contained in AP-42 Supplement B (dated September 1988) and the revised emission factors proposed in the May 1994 report are based upon dust concentration measurements at the inlet side of a cyclone or fabric filter dust collector. In order to provide more realistic estimates of uncontrolled dust emissions from grain elevators, the EPA published an "Interim Section: 9.9.1 Grain Elevators and Processes" in November 1995. The interim emission factors are substantially lower than the previous AP-42 factors. State permitting officials could use the interim factors until the present research project was completed and permanent AP-42 factors established. EPA and the grain industry agree that the interim factors are more in line with likely emission levels at uncontrolled grain elevators than the current or May 1994 emission factors.

It is now widely accepted that the inlet side of a dust control device cannot be used as an accurate estimate of uncontrolled emissions (the basis for the emission factors in AP-42). These measurements reflect the amount of dust that can be stripped from a grain stream rather than the dust that occurs from an uncontrolled operation.

To address this problem, the NGFA's National Grain and Feed Foundation (NGFF) retained Midwest Research Institute (MRI) to gather data on uncontrolled emissions from country and terminal grain elevators. EPA participated by reviewing and commenting on the research protocol. The research was performed in the late summer and fall of 1995. This report provides a description of the tests performed, the data gathered during the testing, and recommends new emission factors for grain elevators.

Grain elevators are buildings and other related structures at which grains and oilseeds are gathered, conditioned, stored and shipped for milling, processing manufacturing, or export. The primary grains handled in the United States include wheat, corn, and soybeans. Other grains handled by grain elevators include oats, barley, rice and sorghum.

Country grain elevators normally receive grain by either "straight" trucks (which have a flat bed and are unloaded through a tailgate) or hopper bottom trucks. Terminal facilities predominately receive grain by hopper bottom trucks, railcars or barges. It is important to recognize that hopper bottom trucks are increasingly replacing straight trucks as the dominant mode of truck grain movement.

Country elevators use both truck and rail as primary means of shipment. Hopper rail cars are the primary way terminal facilities ship grain. Box cars are no longer used to ship grain by the grain industry.

Traditional grain elevators—both country and terminal—are designed so that equipment (such as cleaners, conveyors, and legs) are located inside a building or structure which prevents all but trace visible amounts of dust from reaching the ambient environment. Typically, dust emissions from equipment inside the elevator building are controlled using cyclones; fabric filers; oil-based dust suppression; and enclosure. In contrast to this traditional design, modern elevator design stresses the use of outside enclosed equipment that prevent visible emissions. This testing program was designed to characterize likely emissions from traditional elevators.

It is important to distinguish between emission sources controlled with aspirated capture/collection systems and those not so equipped. For sources with aspirated systems, conventional "stack" testing methods can be used to determine PM concentrations upstream and downstream of the control device. The outlet discharge measurements from this sampling strategy reliably reflect (controlled) PM emitted to the ambient atmosphere. Although the inlet values represent a reasonable estimate of the emissions at the control device inlet, these values will significantly overstate what could reasonably be expected to be emitted from the elevator building if the control device was not present.

Specifically, the inlet measurements of the control device do not accurately reflect emissions from uncontrolled sources. Because uncontrolled emissions are not aspirated, emission factors based on conventional testing methods that measure the dust concentration in a duct being aspirated by a high velocity fan are "likely to be biased high for uncontrolled emissions at operations not equipped with ventilation systems." [1]

Most available data on dust emissions from grain elevators was compiled in the 1970's to develop worst-case design criteria for dust collection devices (such as cyclones and baghouses) during EPA's development of New Source Performance Standards (NSPS) for grain elevators. For example, data was collected on dust control devices associated with legs, cleaners, and belts inside the elevator building. Unfortunately, these data were then used as estimates of emissions that would occur if the control device was not present. This is clearly inaccurate, as noted above.

However, estimating the amount of **dust that might escape from the elevator building or structure under a reasonably worst case scenario**, is a reasonable approach to addressing potential emissions from grain elevator structures.

Of particular interest is PM10 (i.e., particulate matter no greater than 10 μm in aerodynamic diameter). This size range is the basis for EPA's National Ambient Air Quality Standards (NAAQS) for PM. PM10 is also the regulated pollutant when determining applicability of the permitting program mandated in the 1990 Amendments to the Clean Air Act.

This report describes the results from a field testing program conducted for the NGFF to develop more accurate estimates of likely emissions from elevator buildings and when shipping and receiving grain. In all, 54 tests were conducted over four different grain types and at three grain elevators during the summer and fall of 1995 (see Table 1). As stated earlier, the main objective of the test program was to obtain test data on likely dust emissions from uncontrolled grain handling operations that more accurately reflect the PM10 emissions released to the ambient atmosphere. To this end, 36 tests were directed to emissions from operations with deactivated control measures (i.e., dust pick-up points or oil suppression). Fourteen other tests were conducted to evaluate the effectiveness of those control measures. Finally, four tests were used to define "background" conditions.

This research program was a cooperative effort between industry and EPA. The Agency was closely involved in the development and approval of the test protocol used in the research program. The research protocol builds upon earlier testing that MRI performed for EPA in the summer of 1994.[2] In preparation for this earlier testing, representatives of the EPA, MRI, private industry, the Nebraska Grain and Feed Association, and the Nebraska Department of Environmental Quality met in Lincoln, Nebraska during June 1994 to discuss emission testing methodology. The group agreed that stack test methods (such as EPA Method 5 for total particulate or Method 201[A] for PM-10) represented the most appropriate sampling strategy for sources controlled with aspirated capture/collection systems. However, the group also agreed that the use of stack test data as the basis for emission factors for uncontrolled grain elevators and mills is inappropriate. Basing emission factors on that data results in significant overestimates of likely emissions from facilities without aspirated capture/collection systems.

As a result, the EPA tasked MRI to prepare a "generic" test plan[3] that described testing strategies to develop grain emission factors for ambient air pollution purposes. In other words, the test methods were selected that best characterize uncontrolled (i.e., non-aspirated) emissions that escape from the elevator building and from the loading/unloading of trucks and railcars.

The test plan recommended "exposure profiling," which requires simultaneous multipoint sampling over the effective cross-section of the dust source plume. The method relies on a mass balance scheme similar to EPA standard test methods used for conventional ducted sources. The most important distinction between "exposure profiling" and conventional stack testing, however, is that the former samples emissions borne by ambient winds while the latter induces a strong draft to capture particulate. The tests described in this report followed the recommended test strategies.

Table 1. Test Matrix

Emission source	Elevator					
	Country		Terminal 1		Terminal 2	
Receiving	Straight truck		Hopper truck			
	2 corn	BD-5,7	4 wheat	BE-1,4,5,6		
	1 soybean	BD-9	1 corn	BE-7		
			1 soybean	BE-8		
			1 milo	BE-9		
Shipping	Hopper bottom		Hopper truck			
	1 wheat	BD-1	2 soybean[d]	BD-201,202		
	Straight truck		Railcar			
	2 corn	BD-4,-6	4 wheat	BE-102,103,104,105[a]		
	2 corn (oiled)	BD-10,11[b]		BE-111,113		
	1 soybean	BD-8	2 wheat (oiled)	BE-106,107,108		
			3 soybean	BE-109,110		
			2 soybean (oiled)			
Internal handling[e]	6 wheat	BD-102,103,104,106[a]			3 wheat	BF-1,2,3
		BD-115,116			3 corn	BF-4,5,6
	4 wheat (oiled)	BD-107,108 [b]				
		BD-113,114[b]				
	3 corn	BD-118,119,120			Background test[c]	BF-8
	2 corn (oiled)	BD-121,123				
	Background tests[c]	BD-105,111,123				

a Dust control system and local dust pickup points operated during these tests.
b *First and second handlings of freshly oiled grain.*
c Background tests in which no grain was moved. Used to establish background concentration for internal handling tests.
d Soybeans from 1994 harvest. Had been oiled upon receipt.
e Operations underway during testing differed slightly between facilities. Internal handling refers to dust emissions from grain handling operations inside a grain elevator structure, including dust emissions form discharge spouts to open belt conveyors; the discharge of grain from an open belt to another open belt; the discharge of grain from belt trippers into bins; the discharge of grain from moveable grain distributors into bins; the discharge of grain into scales and upper and lower scale garners; leaks from enclosed equipment, such as drag conveyors, bucket elevator legs, cleaners, etc. and any bin opening.

The remainder of this report is structured as follows: Section 2 describes the sources tested and the methodology used. Section 3 presents the test results obtained during the program, and Section 4 discusses the results in the context of recommending emission factors. Section 5 contains the references. The Appendix describes the results of field testing dust controls.

Section 2
Test Site/Source Selection and Scheduling

Once general testing strategy and priorities for testing were established, NGFF and MRI worked closely to identify suitable host facilities for the test program. A total of eight elevators were visited during the week of May 15, 1995. Three elevators—one country and two terminals—were selected for field testing. The country elevator was selected for testing of internal handling and grain receiving/shipping. The facility was equipped to apply oil for dust suppression.

At Terminal 1, the truck shed was well oriented with respect to the prevailing wind direction. Furthermore, the rail shed was relatively enclosed and would channel winds. This facility was selected for field testing of emissions from

- truck receiving
- truck shipping
- railcar shipping

The second terminal elevator (Terminal 2) was selected for testing of internal handling emissions. Industry defines "internal handling" emissions to be dust emissions from grain handling operations that take place within a grain elevator structure, including dust emissions from discharge spouts to open belt conveyors; the discharge of grain from an open belt to another open belt; the discharge of grain from belt trippers into bins; the discharge of grain from moveable grain distributors into bins; the discharge of grain into scales and upper and lower scale garners; enclosed equipment, such as drag conveyors, legs, cleaners, etc.; and any bin opening. One of the primary goals of the testing program was to determine the reasonable worst case scenario of emissions to the ambient atmosphere from internal operations.

Once test sites had been identified, MRI developed site-specific test plans to assess the air pollution impact of particulate that escapes the elevator building. Site-specific plans were submitted to NGFA, and were then forwarded to USEPA Office of Air Quality Planning and Standards for review and comment. The plans followed the guidelines used to develop the "generic" test plans prepared for USEPA.[3] The guidelines include:

- Using exposure profiling to measure fugitive (i.e., non-ducted) emission sources at elevators. It was agreed that exposure profiling represents the most appropriate means to measure emissions from non-aspirated sources at elevators. Exposure profiling requires simultaneous multipoint sampling over the effective cross-section of the dust source plume. The method relies on a mass balance scheme similar to testing methods used in conventional duct testing. Most importantly, exposure profiling attempts to sample emissions as they would occur "naturally."

- Relying on the wind to carry particulate from the source to the sampling array for testing of "external" sources (i.e., those open to ambient winds, such as receiving and shipping).

- Focusing on the particulate that could escape the building under a reasonably worst case scenario for testing of "internal" sources not open to ambient winds. Testing focused on a "reasonable worst-case" so that the resulting factors represent likely upper bounds for emissions from grain elevator buildings.

- Focusing on the regulated pollutant, PM10, during testing. However, limited effort was directed toward total airborne particulate.

The exposure profiling technique used for the tests in this study is based on the isokinetic profiling concept that is used in conventional source testing. The passage of airborne pollutant immediately downwind of the source was measured directly by means of simultaneous multipoint sampling over the effective cross-section of the open dust source plume. This technique used a mass-balance calculation scheme similar to EPA Method 5 stack testing, rather than requiring indirect calculation through the application of a generalized atmospheric dispersion model.

Testing relied on two basic equipment deployment schemes, one for "external" sources—such as receiving and shipping—and the other for "internal handling" sources. Testing of "external" sources relied on ambient winds to carry dust to the samplers. Figure 1 shows a schematic illustration of how PM emissions were sampled. Sampling relied on multipoint exposure profiling over the area through which particulate escapes to the ambient environment.

Multipoint measurements of both concentration and air flow were conducted simultaneously over the effective area of the plume. Dust was sampled through a cyclone preseparator (Figure 2) which exhibits a 50% cutpoint of approximately 10 microns in aerodynamic diameter (μmA) when operated at 40 cfm. Thus, the cyclone collected a sample associated with PM10 (particulate matter no greater than 10 μmA) on 8 in by 10 in glass fiber filter. In addition, a coarser particulate sample was collected within the body of the cyclone. The same type of volumetric flow controller (VFC) used in reference PM10 samplers was employed to control the airflow at 40 cfm. During each test, air flow (wind) was monitored at the downwind sampling sites by a Biram vane anemometer.

For loading bay operations, the effective area corresponded to the open doorway area. For loading from external spouts, a temporary "baffle" was constructed. The baffle served only to channel ambient winds to define a dust plume. Because particulate concentrations (mass/volume) and wind speed (length/time) are known throughout the sampling plane, the mass emission rate is easily found. The contribution of ambient ("background") particulate was accounted for by the use of samplers upwind from the tested operation.

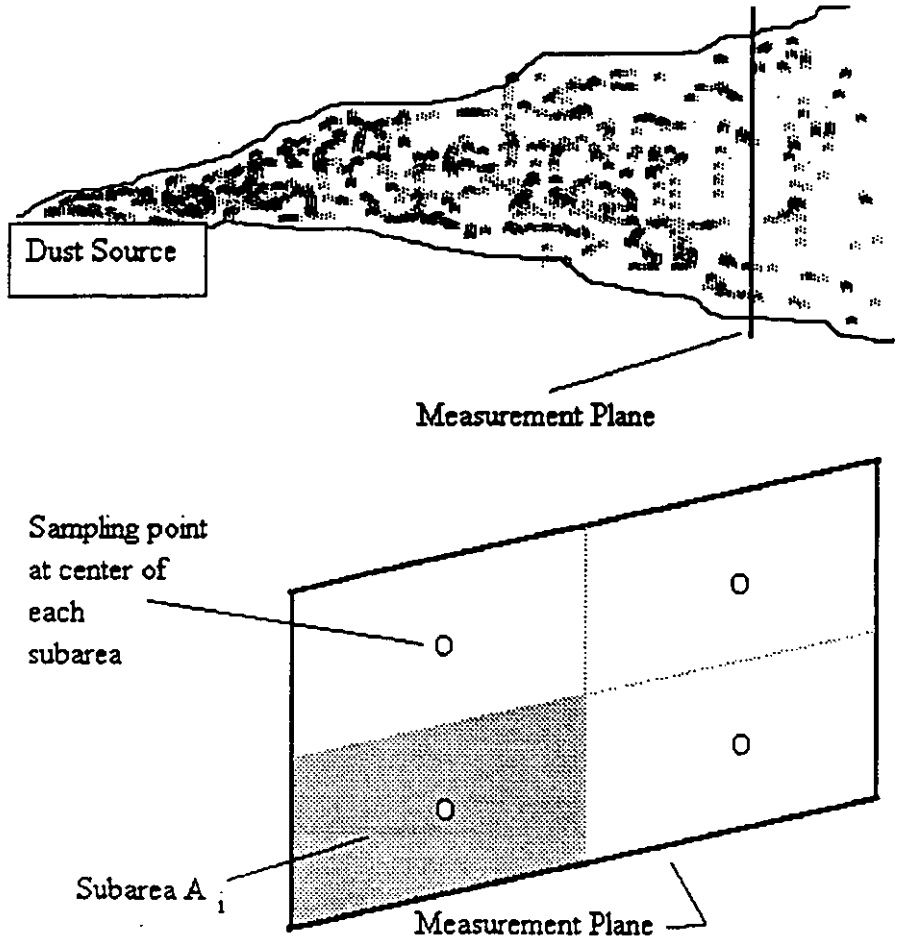

Emission rate = $\sum$ mass flux X area X sampling time

Mass flux through subarea = Concentration X Air flow

Figure 1. Schematic Diagram of Exposure Profiling Concept

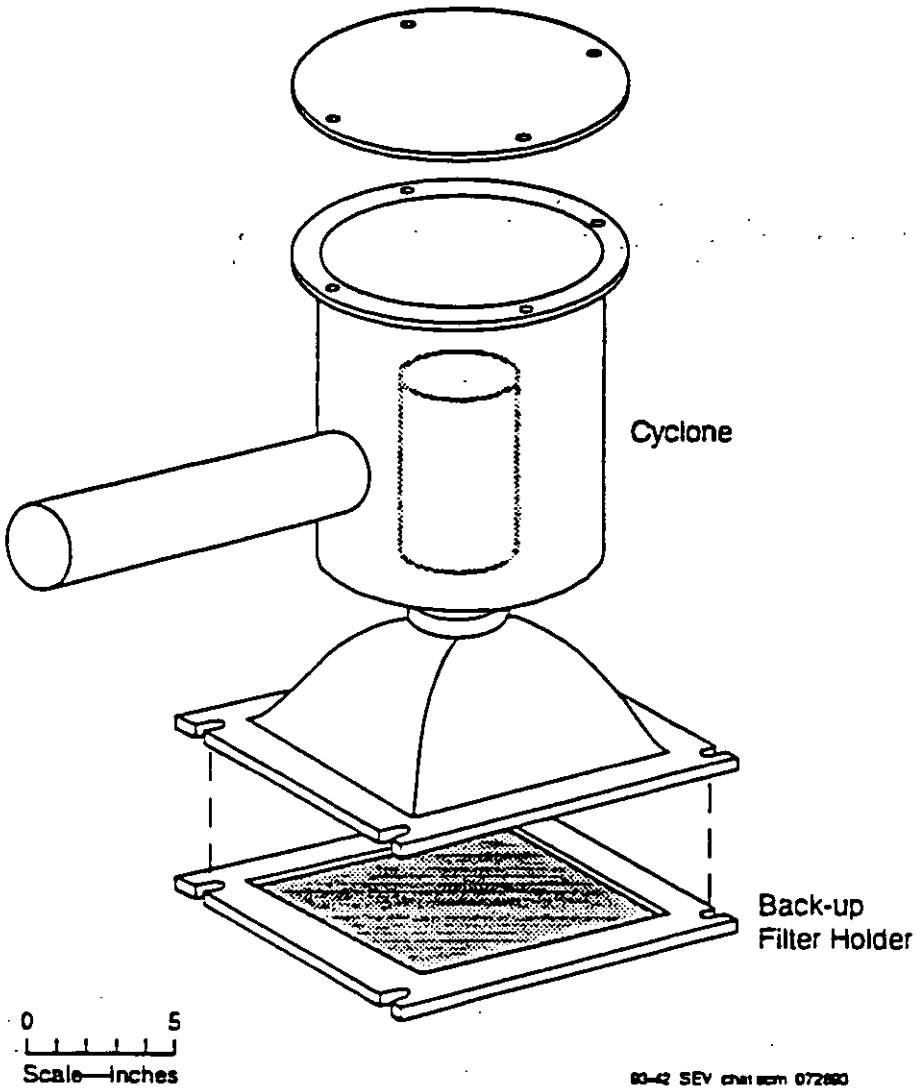

Figure 2. High-volume Cyclone Preseparator

As noted earlier, it is crucially important that testing focus on the particulate that escapes the building. To this end, a "reasonable worst-case" approach was adopted to characterize internal sources so that the resulting factors represent likely upper bounds. For these sources, testing relied on (a) sealing off much of the headhouse; (b) use of propeller fans to pull a slight draft through 1 or 2 windows; and (c) use of high-volume air sampling to quantify the **PM mass actually leaving the elevator building.**

Figure 3 shows a schematic diagram of the testing strategy. Because the particulate concentrations (mass/volume) and the evacuation rate (volume/time) were well characterized at each point, then the mass emission rate through the opening could be easily found. Note that the results obtained in this way represent upper bounds on the amount of particulate that escapes the building.

This strategy does not permit an "upwind" method of determining background concentrations. However, sampling was conducted not only when grain was being handled, but also under "background" conditions. The latter takes into account the particulate mass contained within the building.

The sampling and analysis procedures followed in this field testing program were subject to certain QA guidelines. These guidelines will be discussed in conjunction with the activities to which they apply. These procedures met or exceeded the requirements specified in the reports entitled "Quality Assurance Handbook for Air Pollution Measurement Systems, Volume II—Ambient Air Specific Methods" (EPA 600/4-77-027a) and "Ambient Monitoring Guidelines for Prevention of Significant Deterioration" (EPA 450/2-78-019).

As part of the QA program for this study, routine audits of sampling and analysis procedures were performed. The purpose of the audits was to demonstrate that measurements were made within acceptable control conditions for particulate source sampling and to assess the source testing data for precision and accuracy. Examples of items audited include gravimetric analysis, flow rate calibration, data processing, and emission factor calculation. The mandatory use of specially designed reporting forms for sampling and analysis data obtained in the field and the laboratory aided in the auditing procedure. Further details on specific sampling and analysis procedures are provided in the following sections.

Particulate samples were collected on Whatman EPM-2000 glass fiber filters. Prior to the initial weighing, the filters were equilibrated for 24 h at constant temperature and humidity in a special weighing room. During weighing, the balance was checked at frequent intervals with standard (Class S) weights to ensure accuracy. The filters remained in the same controlled environment for another 24 h, after which a second analyst reweighed them as a precision check. Ten percent of the filters used in the field served as blanks. The QA guidelines pertaining to preparation of sample collection media and equipment operations are presented in Tables 2 and 3, respectively.

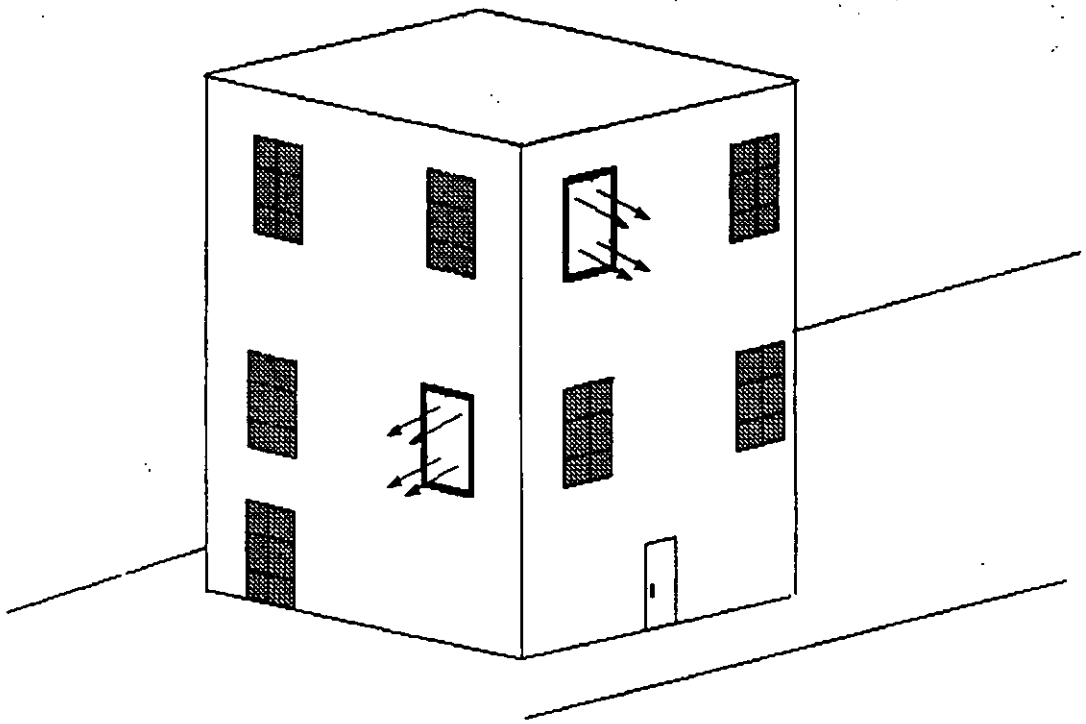

Figure 3. Schematic Diagram Showing How Internal Tests Were Conducted

Table 2. Quality Assurance Procedures for Sampling Media

Activity	QA check/requirement
Preparation	Inspect and imprint glass fiber media with identification numbers.
Conditioning	Equilibrate media for 24 h in clean controlled room with relative humidity of 40% (variation of less than ±5% RH) and with temperature of 23°C (variation of less than ±1°C).
Weighing	Weigh hi-vol filters to nearest 0.05 mg.
Auditing of weights	Independently verify final weights of 10% of filters (at least four from each batch). Reweigh batch if weights of any hi-vol filters deviate by more than ±2.0 mg. For tare weights, conduct a 100% audit. Reweigh tare weight of any filters that deviate by more than ±1.0 mg. Follow same procedures for impactor substrates used for sizing tests. Audit limits for impactor substrates are 1.0 and 0.5 mg for final and tare weights, respectively.
Correction for handling effects	Weigh and handle at least one blank for each 1 to 10 filters of each type used to test.
Calibration of balance	Balance to be calibrated once per year by certified manufacturer's representative. Check prior to each use with laboratory Class S weights.

Table 3. Quality Assurance Procedures for Sampling Equipment

Activity	QA check/requirement[a]
Maintenance • All samplers	Check motors, gaskets, timers, and flow measuring devices at each plant prior to testing.
Operation • Timing	Start and stop all downwind samplers during time span not exceeding 1 min.
• Isokinetic sampling (cyclones)	Adjust sampling intake orientation whenever mean wind direction dictates. Change the cyclone intake nozzle whenever the mean wind speed approaching the sampler falls outside of the suggested bounds for that nozzle. This technique allocates no nozzle for wind speeds ranging from 0 to 10 mph, and unique nozzles for four wind speed ranges above 10 mph.
• Prevention of static mode deposition	Cover sampler inlets prior to and immediately after sampling.

[a] "Mean" denotes a 3- to 15-min average.

To prevent particulate losses, the exposed media were carefully transferred at the end of each run to protective containers for transportation. The interior surfaces of cyclone preseparators were washed with distilled water; particulate matter that collected on the interior surfaces of cyclone preseparators during sizing tests was rinsed into separate sample jars which were then capped and taped shut. In the field laboratory, exposed filters were placed in individual glassine envelopes and then into numbered file folders. When exposed filters and the associated blanks were returned to the MRI laboratory, they were equilibrated under the same conditions as the initial weighing. After reweighing, 10% were audited to check weighing accuracy.

To determine the sample weight of particulate collected on the interior surfaces of samplers, the entire wash solution was passed through a Büchner-type funnel holding an 11-cm glass fiber filter under suction. This ensured collection of all suspended material on the filter. (The 11-cm filters were substituted for standard 47-mm filters because of the large amount of material collected in the cyclone.)

All wash filters were weighed with a 100% audit of tared and a 10% audit of exposed filters. Blank values were determined by washing "clean" (unexposed) cyclone preseparators in the field and following the above procedures.

To calculate emission rates from exposure profiling test data, a conservation of mass approach is used. The passage of airborne particulate (i.e., the quantity of emissions per unit of source activity) is obtained by spatial integration of distributed measurements of exposure (mass/area) over the effective cross-section of the plume. Exposure is the point value of the flux (mass/area-time) of airborne particulate integrated over the time of measurement, or equivalently, the net particulate mass passing through a unit area normal to the mean wind direction during the test.

The concentration of particulate matter measured by an individual sampler is given by:

$$C = \frac{m}{Qt}$$

where: C = particulate concentration (mass/volume)
m = particulate sample weight (mass)
Q = sampler flow rate (volume/time)
t = duration of sampling (time)

The material collected on the 8- x 10-in filter corresponds to the PM10 concentration.

The isokinetic flow rate (IFR) is the ratio of a directional sampler's intake air speed to the mean wind speed approaching the sampler. It is given by:

$$IFR = \frac{Q}{aU}$$

where: Q = sampler flow rate (volume/time)
a = intake area of sampler (area)
U = mean wind speed at height of sampler (length/time)

This ratio is of interest in the sampling of total particulate, since isokinetic sampling ensures that particles of all sizes are sampled without bias. The cyclone has an intake velocity of 880 ft/min (10 mph) when operated at 40 cfm. Note, however, that because the primary interest in this program was directed to PM-10 emissions, sampling under moderately nonisokinetic conditions posed no difficulty. PM-10 particles have weak inertial characteristics at normal wind speeds and therefore are relative unaffected by anisokinesis.[4] Section 3 discusses the effect of nonisokinetic sampling in connection with total particulate emission factors.

The net particulate flux represents net passage of mass per unit area and is found by:

$$F = (C - C_b)U$$

where: F = net particulate flux (mass/area/time)
C = concentration measured (mass volume)
C_b = "background" concentration (mass/volume)
U = mean wind speed (length/time) through measurement plane

Whether one or several samplers are used to sample over the effective area, the mass emitted is found by:

$$M = \sum_{i=1}^{n} A_i \cdot F_i \cdot t_i$$

where: n = number of samplers used
M = mass flow rate (mass/time)
F_i = particulate flux (mass/area-time) measured by sampler "i"
A_i = area of measurement plane sampled by "i"
t_i = time sampler "i" ran

Dividing M by the weight of grain handled yields the emission factor in lb/ton. Weights could be directly recorded for all tests except those of internal handling at the country elevator (which did not have a scale within the headhouse). In that case, the weight of grain handled was based on the elapsed time of grain movement; the stated capacity (bu/hr) of the leg; and the assumed grain density (60 lb/bu for wheat and 56 lb/bu for corn, sorghum or soybeans).

The original test schedule called for beginning field sampling activities in August 1995 and concluding by mid-October. However, the fall harvest was three to five weeks later than normal during 1995 and testing did not conclude until early December 1995.

Throughout the report, the term emission factor is used mainly to reference PM10 emissions. As noted above, a limited effort was directed to characterizing total particulate (TP) emissions in addition to PM10. However, it is critically important to note that apparent TP emission factors are strongly dependent upon the distance between where emissions are released and where they are measured. Because of wind directions and other logistical concerns, it was not possible to keep that distance reasonably constant. For example, in railcar loading tests, the distance differed by a factor of 3 depending upon whether winds were westerly or easterly. Clearly, the additional distance that emissions need to travel gives the particles additional time to settle out, thus decreasing the apparent emission rate.

PM10 emissions, on the other hand, remain suspended and are thus unaffected by different source-to-measurement-plane distances. For this reason and the fact that EPA uses PM10 as the basis for (a) ambient air quality standards and (b) determining applicability of the new permitting program mandated in the 1990 Amendments to the Clean Air Act, the report focuses its main attention on PM10 emissions.

Section 3
Test Results

This section describes the results from the field testing program. Table 4 presents the test matrix along with the run numbers used to identify the tests. Run numbers for tests conducted at the country elevators and Terminals 1 and 2 start with the prefix BD, BE and BF, respectively, to identify the general facility location. Thereafter, the run number is associated with a test series, as shown below:

Table 4. Test Series

Test series	Country BD runs	Terminal 1 BE runs	Terminal 2 BF runs
1, 2, ...	Truck receiving and shipping	Truck receiving	Internal handling
101, 102, ...	Internal handling	Railcar shipping	
201, 202, ...		Truck shipping	

The test series reference different arrangements of samplers used. For example, tests BD-1, 2, ..., 11 refer to tests conducted at the country elevator using air samplers within the plane of the downwind doorway of the loading/unloading bay. The BD-101 test series were also conducted at the country elevator but used a different sampling arrangement. Six different sampling configurations were used during the course of the study. Owing to the different harvest periods, testing was conducted in five major blocks of time from late August until early December 1995.

Figure 4 shows the sampler deployment used for test series BD-1 through BD-11, which considered emissions from truck receiving and shipping. In this arrangement, the doorway was divided into 4 subareas, with a sampler located at the center of each subarea. All tests were conducted with the dust pickups deactivated.

The first test (Run BD-1) conducted during the research program served as "shakedown" to determine how much grain needed to be handled from an external operation to capture adequate sample mass on the filters. (The quantity of grain was determined by weighing the truck before and after the test.) After 13 tons had been transferred, visual examination of the high volume filters revealed that substantial mass (several hundred milligrams) had been collected. Because that level borders on overloading the filter, subsequent runs in the BD-1 series were limited to handling 7 to 9 tons of grain.

Figure 5 shows the floor plan for the bin deck and distributor floor at the country elevator (test series BD-102 through 123). Windows and doors on these floors were closed

and the rooms evacuated through a 48-in fan located behind the sampling enclosure shown in Figure 6. These tests usually required approximately 10 minutes of grain movement through the distributor. The start and stop of movement of grain through the distributor was determined by sound to the nearest quarter-minute; the amount of grain handled was determined by multiplying the elapsed time by the stated capacity of the leg. After the movement of grain stopped, samplers continued to run for at least 10 minutes to ensure that remaining dust would be sampled. Because the fan evacuated at approximately 15,000 cfm, this corresponds to approximately 5 air exchanges after the movement of grain stopped. During sampling of internal operations, grain was elevated to the top of the headhouse by an inside bucket elevator leg. The grain was then discharged into grain storage either inside or outside of the headhouse after first passing through a moveable distributor and spouting system.

The sampling arrangement used for test series BE-1 through 9 is shown in Figure 7. These tests of grain receiving from hopper bottom trucks were conducted with the dust control system deactivated. Tests were quite short and usually only half of a truckload was used to test. Grain amounts were determined by weighing the truck before and after the test. Note that runs BE-2 and BE-3 were aborted tests. A brief wind reversal occurred during BE-2 and substantial dust was observed to be displaced out the upwind door during BE-3. Thereafter, the grating was covered during the remaining tests to block displaced air and thus direct the emissions through the downwind doorway to ensure that the test captured all dust being emitted.

Test series BE-101-113 concerned railcar loading and used the sampling arrangement shown in Figure 8. The arrangement relied on a plastic sheeting enclosure to define the effective area of the plume. Samplers were placed at the center of two equal subareas. The amount of grain was controlled by the loading operator who provided a total weight of grain loaded into the railcar.

Test series BE-201 through 202 (Figure 9) relied on a temporary baffle to channel winds during tests of truck shipping from an outside spout. The baffle was 20 ft long, 17 ft wide and 14 ft high. The amount of grain handled was determined by weighing the truck before and after the tests. Note that a third test (BD-203) was aborted because of a wind reversal during the run.

Internal handling tests (test series BF-1 through 8) were conducted using the sampling arrangement shown in Figures 10 and 11. Here, two floors were sealed and evacuated using a 48-in fan on the scale (lower) floor and a 36-in fan on the garner (upper) floor. The amount of grain moved during a test was supplied by the elevator operator. Samplers continued to run for 10 minutes after the movement of grain so that all dust suspended inside of the elevator that might be emitted to the ambient atmosphere under a reasonably worst case scenario was sampled. During sampling of internal operations, grain was discharged into a bucket elevator leg from the basement belt and elevated to the top of the headhouse. The grain was then discharged onto a gallery belt for storage in silos after first passing through a garner, scale and distribution system.

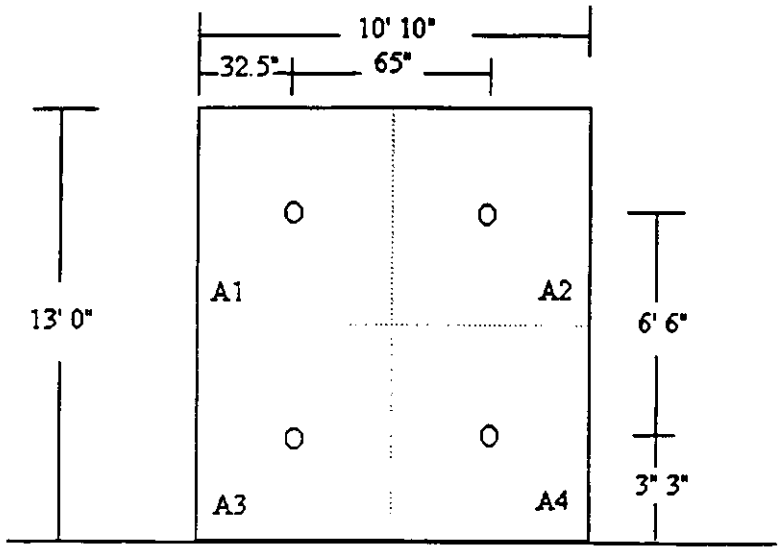

Figure 4. Sampler Deployment Used for Test Series BD-1 through -11

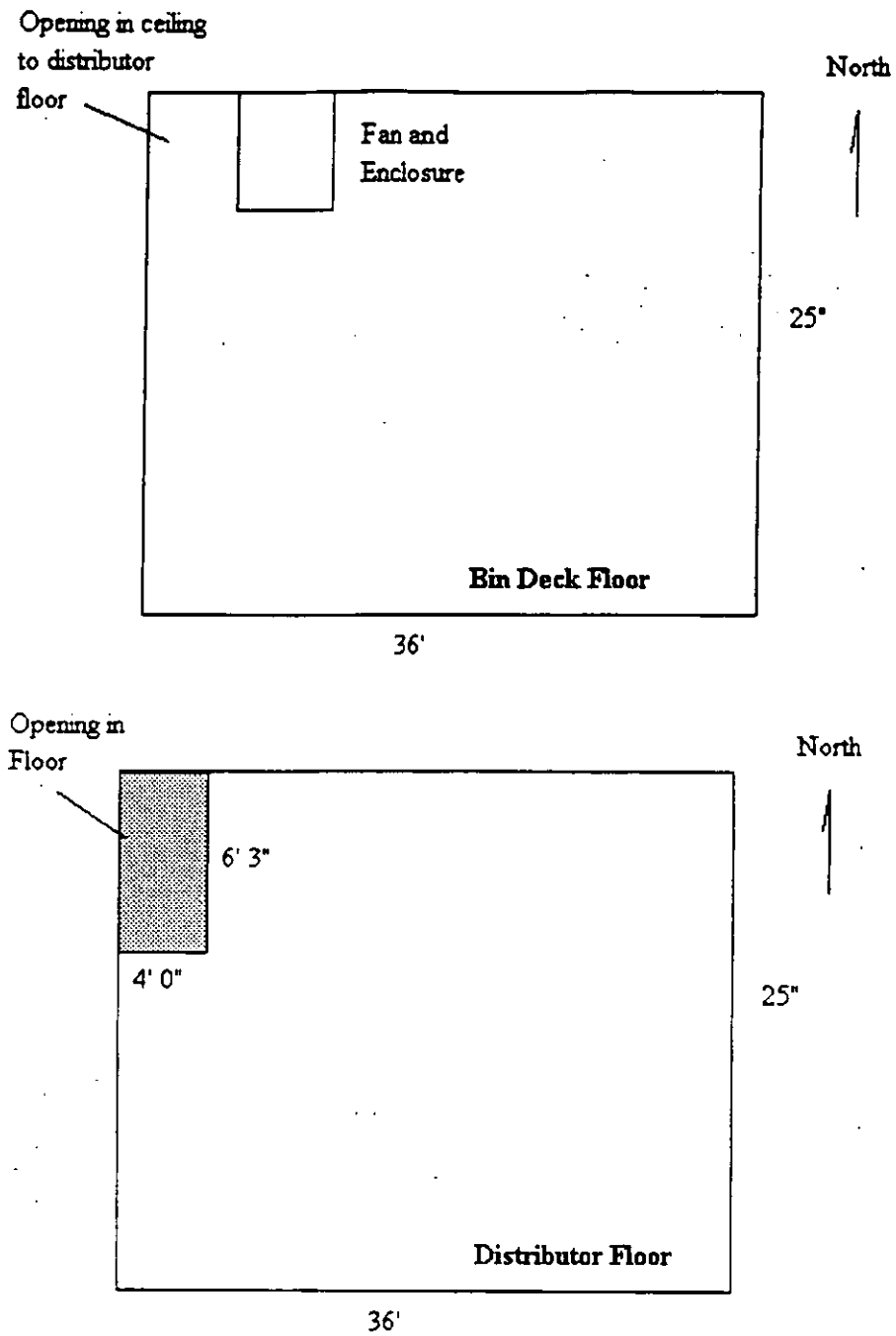

Figure 5. Floor Plan for BD-101 Test Series

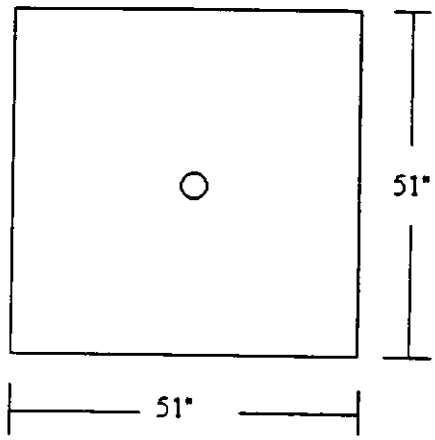

Figure 6. Sampler Deployment for Test Series BD-102 through -123

Tables 5 and 6 summarize the uncontrolled and controlled PM10 emission factors, respectively, determined in the program. The uncontrolled test results are used in the next section to recommend emission factors for inclusion in AP-42. The Appendix discusses the controlled test results.

Tables 7 and 8 present the uncontrolled and controlled, respectively, TP emission factors obtained during this study. These factors should be considered as conservative upper bounds on the "true" TP emission factors for the reasons given below.

As noted in Section 2, the isokinetic flow ratio (IFR) is important in determining total particulate (TP) concentrations and emission factors. The IFR is the ratio between the sampler intake speed and the speed of the air approaching the sampler. For an IFR > 1, the sampler speed is faster than the air speed and too few large particles are sampled. For IFR < 1, too many large particles enter the sampler. Thus, depending upon whether the IFR is greater or less than one, the measured TP concentration is less or greater than the "true" TP concentration.

Fairly complicated relationships have been proposed to correct for non-isokinetic conditions. In all these relationships, the ratio (R) of "true-to-measured" concentration varies from a value of 1 for small particles to a value equal to the IFR for large particles. The relationships differ only in how they fit the curve between these two limiting cases.

In this report, a simplified correction has been used to place conservatively high upper bounds on TP emissions. This approach assumes that all particles that pass through the cyclone and are caught on the filter are unaffected by isokinesis (i.e., R = 1). On the other hand, all particles caught within the body of the cyclone are considered "large" particles (i.e., R = IFR). However, if the IFR < 1, then the large particle concentration is not corrected. Because (a) the limiting case of the nonisokinetic correction is applied and (b) no decrease is used for IFR < 1, the values reported here represent conservative upper bounds on the "true" TP concentrations and emissions.

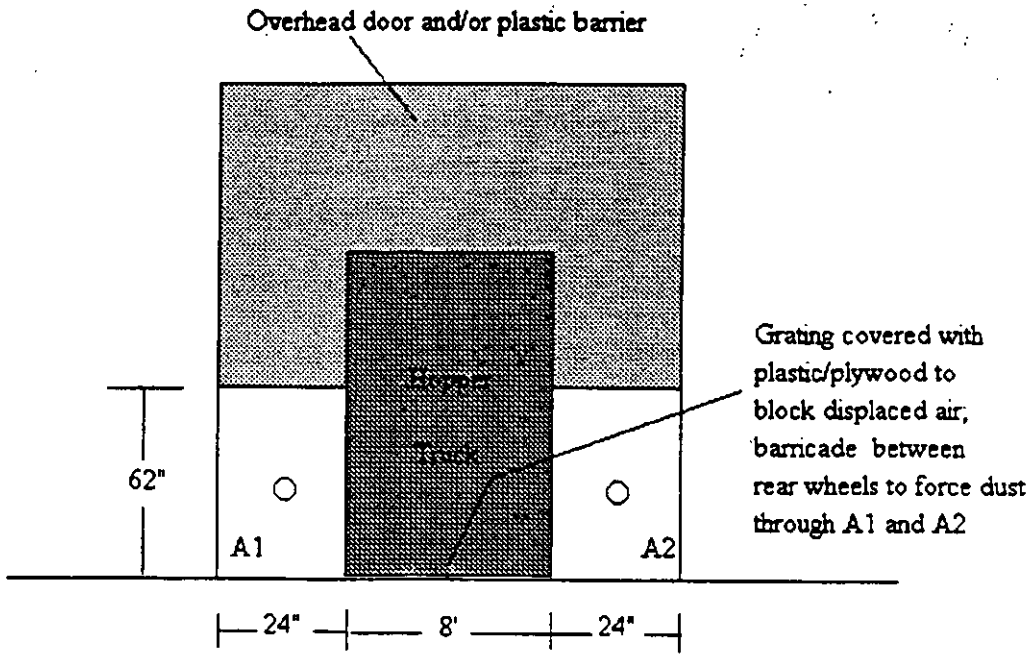

Note: Lateral dimensions approximate, depending on how truck is positioned within shed

Note Runs BE-1 through BE-6 conducted in northeast doorway; Runs BE-7, 8, and 9 conducted in southwest doorway.

Figure 7. Sampler Deployment Used for Test Series BE-1 through -9

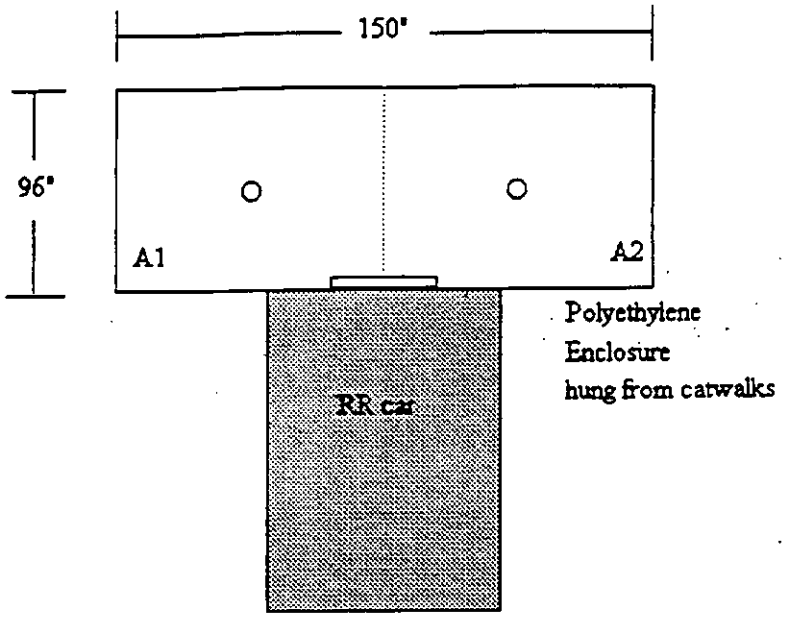

Figure 8. Sampler Deployment for Test Series BE-101

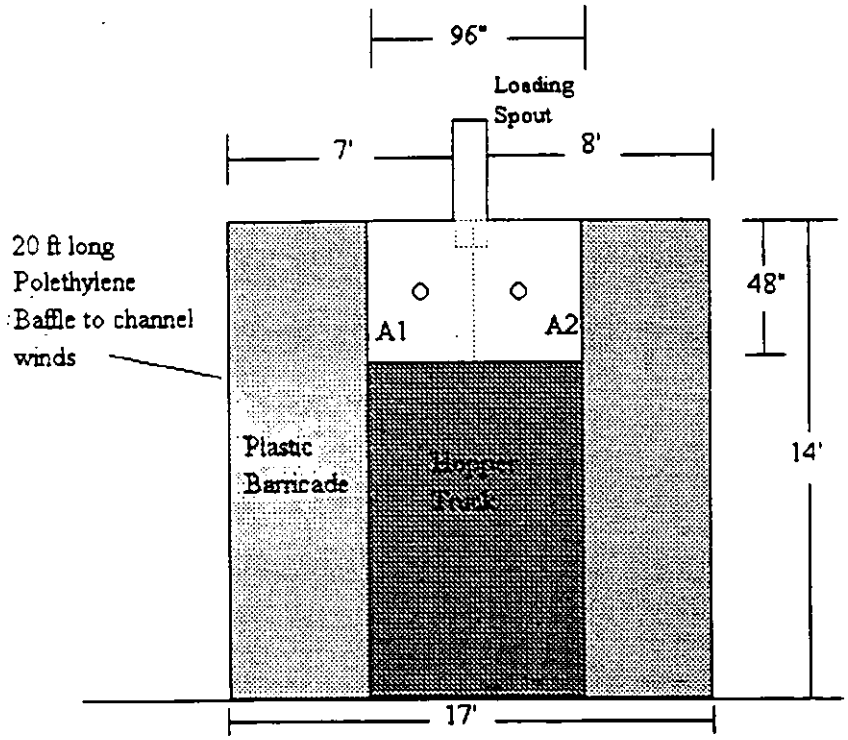

Figure 9. Sampler Deployment for Test Series BE-201 to 202

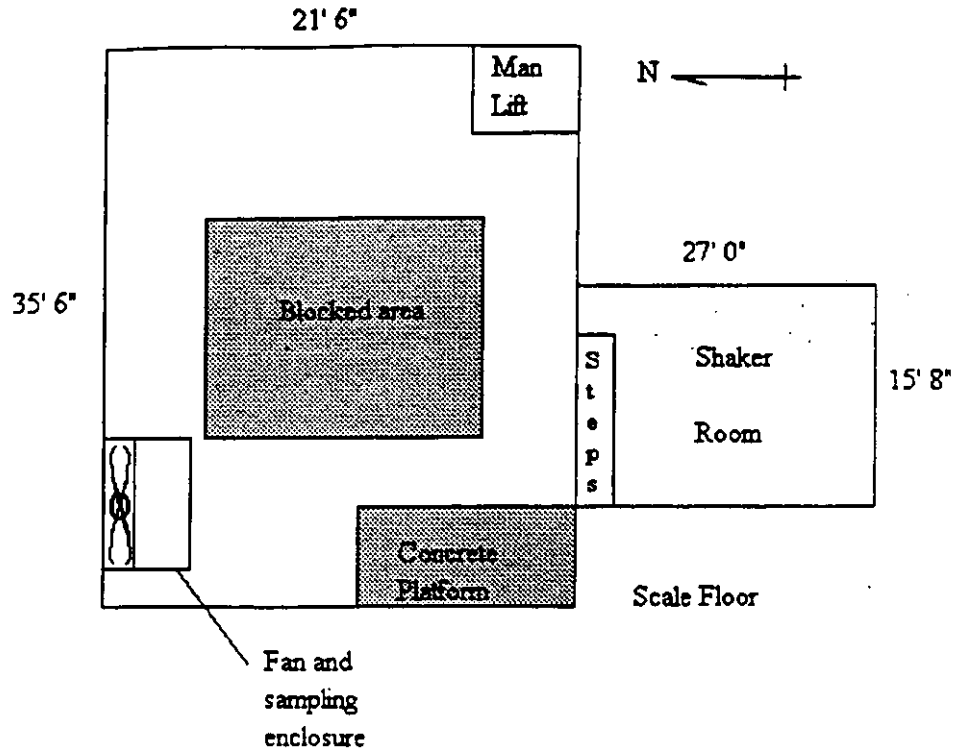

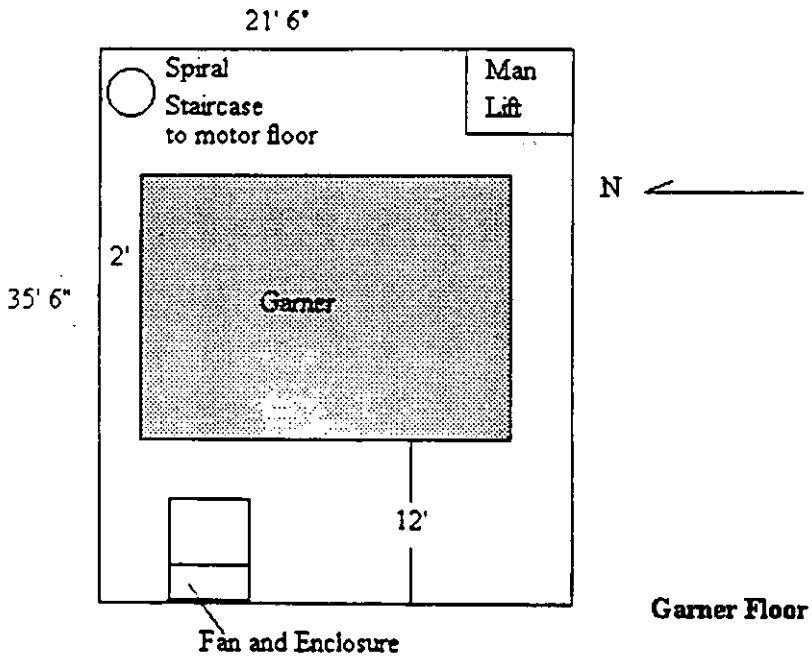

Figure 10. Floor Plans for BF-1 Test Series

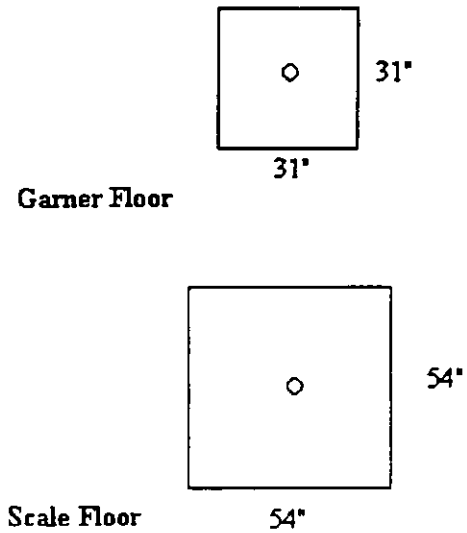

Figure 11. Sampler Deployment for Test Series BF-1 through 8

Table 5. Uncontrolled PM10 Emission Factors (lb/ton)

Emission source	Elevator						
	Country			Terminal 1			Terminal 2
Receiving	Straight truck			Hopper truck			
	2 corn	BD-5	0.113	4 wheat	BE-1	0.0103	
		BD-7	0.0131		BE-4	0.00571	
					BE-5	0.00286	
	1 soybean	BD-9	0.0521		BE-6	0.00405	
				1 corn	BE-7	0.0176	
				1 soybean	BE-8	0.00530	
				1 milo	BE-9	0.00802	
Shipping	Hopper bottom			Hopper truck			
	1 wheat	BD-1	0.0786	2 soybean[a]	BE-201	0.00211	
					BE-202	0.00364	
	Straight truck						
	2 corn	BD-4	0.0424	Railcar			
		BD-6	0.0166	3 wheat	BE-102	0.00269	
					BE-103	0.00212	
	1 soybean	BD-8	0.0323		BE-104	0.00380	
				3 soybean	BE-106	0.00162	
					BE-107	0.00192	
					BE-108	0.00130	

Table 5 (Continued)

Emission source	Elevator					
	Country			Terminal 1	Terminal 2	
Internal handling[c]	5 wheat[b]	BD-102	0.0189		3 wheat	
		BD-103	0.0218			BF-1 0.0492
		BD-104	0.0199			BF-2 0.0652
						BF-3 0.0816
		BD-115	0.0181		3 corn	
		BD-116	0.0270			BF-4 0.0425
						BF-5 0.0289
						BF-6 0.0235
	3 corn[b]	BD-118	0.0282			
		BD-119	0.0223			
		BD-120	0.0243			

[a] The grain had been treated with soybean oil in the Fall of 1994. However, research[5] indicates that the residual ability of oil to reduce dust emissions from grain is insignificant after the treated grain has been in storage for six months. Since testing occurred almost 12 months after treatment, no residual control is expected.

[b] The amount of grain handled is based on 60 lb/bu for wheat and 56 lb/bu for corn.

[c] During sampling of internal operations at the country elevator, grain was elevated to the top of the headhouse by an inside bucket elevator leg. The grain was then discharged into grain storage either inside or outside of the headhouse after first passing through a moveable distributor and spouting system. During sampling of internal operations at terminal 2, grain was discharged into a bucket elevator leg from the basement belt and elevated to the top of the headhouse. The grain was then discharged onto a gallery belt for storage in silos after first passing through a garner, scale and distribution system.

Table 6. Controlled PM10 Emission Factors (lb/ton)

Emission source	Elevator		
	Country	Terminal 1	Terminal 2
Shipping	Straight truck 2 corn (oiled) BD-10[b] 0.0522 BD-11[b] 0.0203	Railcar 1 wheat BE-105[a] 0.00065 2 wheat (oiled) BE-111 0.00073 BE-113 0.00055 2 soybean (oiled) BE-109 0.00162 BE-110 0.00243	
Internal handling[c]	2 wheat BD-106[a] 0.00774 BD-110[a] 0.00993 4 wheat (oiled) BD-107[b] 0.0178 BD-108[b] 0.0109 BD-113[b] 0.00671 BD-114[b] 0.00766 2 corn (oiled) BD-121[b] 0.0178 BD-122[b] 0.00543		

[a] The dust control system and local dust pickup points operated during these tests.

[b] First and second handlings of freshly oiled grain.

[c] During sampling of internal operations at the country elevator, grain was elevated to the top of the headhouse by an inside bucket elevator leg. The grain was then discharged into grain storage either inside or outside of the headhouse after first passing through a moveable distributor and spouting system. The amount of grain handled is based on 60 lb/bu for wheat and 56 lb/bu for corn.

Table 7. Uncontrolled TP Emission Factors (lb/ton)

Emission source	Elevator								
	Country			Terminal 1			Terminal 2		
Receiving	Straight truck			Hopper truck					
	2 corn	BD-5	0.497	4 wheat	BE-1	0.0792			
		BD-7	0.261		BE-4	0.0288			
					BE-5	0.00674			
	1 soybean	BD-9	0.153		BE-6	0.0135			
Shipping	Hopper bottom			Hopper truck					
	1 wheat	BD-1	0.238	2 soybean[a]	BE-201	0.00972			
					BE-202	0.0238			
	Straight truck								
	2 corn	BD-4	0.227	Railcar					
		BD-6	0.359	3 wheat	BE-102	0.0286			
					BE-103	0.0193			
					BE-104	0.0341			
	1 soybean	BD-8	0.0879						
Internal handling[c]	5 wheat[b]	BD-102	0.0309				1 wheat		
		BD-103	0.0355					BF-2	0.0836
		BD-104	0.0286						
		BD-115	0.0253						
		BD-116	0.0372				1 corn		
								BF-4	0.163
	3 corn[b]	BD-118	0.0773						
		BD-119	0.0529						
		BD-120	0.0702						

a The grain had been treated with soybean oil in the Fall of 1994. However, research[5] indicates that the residual ability of oil to reduce dust emissions from grain is insignificant after the treated grain has been in storage for six months. Since testing occurred almost 12 months after treatment, no residual control is expected.

b The amount of grain handled is based on 60 lb/bu for wheat and 56 lb/bu for corn.

c During sampling of internal operations at the country elevator, grain was elevated to the top of the headhouse by an inside bucket elevator leg. The grain was then discharged into grain storage either inside or outside of the headhouse after first passing through a moveable distributor and spouting system. During sampling of internal operations at terminal 2, grain was discharged into a bucket elevator leg from the basement belt and elevated to the top of the headhouse. The grain was then discharged onto a gallery belt for storage in silos after first passing through a garner, scale and distribution system.

Table 8. Controlled TP Emission Factors (lb/ton)

Emission Source	Elevator		
	Country	Terminal 1	Terminal 2
Shipping	Straight truck 2 corn (oiled) BD-10[b] 1.03 BD-11[b] 0.643	Railcar 1 wheat BE-105[a] 0.00494	
Internal handling[c]	2 wheat BD-106[a] 0.0139 BD-110[a] 0.0147 4 wheat (oiled) BD-107[b] 0.0473 BD-108[b] 0.0294 BD-113[b] 0.0112 BD-114[b] 0.0106 2 corn (oiled) BD-121[b] 0.0584 BD-122[b] 0.0377		

[a] The dust control system and local dust pickup points operated during these tests.

[b] First and second handlings of freshly oiled grain.

[c] During sampling of internal operations at the country elevator, grain was elevated to the top of the headhouse by an inside bucket elevator leg. The grain was then discharged into grain storage either inside or outside of the headhouse after first passing through a moveable distributor and spouting system. The amount of grain handled is based on 60 lb/bu for wheat and 56 lb/bu for corn.

Section 4
Discussion of Results

This section discusses the test results obtained during the field program for uncontrolled conditions and recommends emission factors for application to elevators without dust control systems. Before beginning that discussion, several points should be noted.

The field results indicate that, within a specific operation at a single facility, results for different grains and oilseeds tend to overlap one other. For example, when one considers receiving from hopper trucks at Terminal 1 (i.e., the BD-1 test series in Table 5), one finds that the results for both soybeans and sorghum lie within the range for wheat. Similar results are found for straight truck shipping/receiving tests in Table 5. Furthermore, a paired t-test analysis of the BD-101 series indicates that there is no significant difference in emissions from rail shipping of wheat as opposed to soybeans. Simply put, the field tests indicate that there is not a significant difference in the amount of dust emitted from a specific operation handling different grains.

In other words, the field test results for a specific operation handling a single grain span a fairly broad range (roughly a factor of 2 to 4 between the low and high values). This means that field test results can be combined across different grains with little loss in information.

Because no significant difference was observed between grains in field tests, it was decided to average emission factors across grain types for two reasons: 1) Averaging test results across grains results in a relatively simple set of emission factors that provide information that is representative of expected emissions from grain elevators; and 2) the size of the available database for each emission factor is effectively increased and, importantly, greater confidence can be attributed to the resulting factors.

Recommended emission factors for uncontrolled operations were developed in the following way:

1. First, it was decided not to distinguish between country and terminal elevator in the final table. This is the same approach taken in the interim set of emission factors. Rather, emission factors are grouped by operation and across grains. This approach recognizes that: a) there is no conceptual difference between specific operations (e.g., receiving, shipping, etc.) at country and terminal facilities; b) the emission factors intrinsically account for differences in volume put-through; and c) actual test data did not show any appreciable difference between grains.

2. At the request of EPA, separate emission factors for straight and hopper bottom trucks are reported. This is different than the approach taken in the interim set of emission factors where only one emission factor for truck receiving is reported.

3. Because the size and degree of enclosures of rail and truck shipping areas can differ greatly, emission results from railcar and truck shipping were considered separately.

4. For rail receiving, the mechanism of hopper truck unloading is conceptually equivalent to that for hopper railcar unloading. Both operations represent choke unloading from a hopper compartment. (Recall that hopper cars are the only type of rail car now used to transport grain in the U.S.)

Thus, the following PM10 emission factors (Table 9) are based on the results of this field testing program:

Table 9. Summary of Uncontrolled PM10 Emission Factors

Operation	PM10 emission factor (lb/ton)	Basis for factor
Truck shipping	0.029	Arithmetic average of runs BD-1, 4, 6, 8 and BE-201, 202 (6 tests)
Truck receiving		Arithmetic average of runs
- Hopper bottom trucks	0.0077	- BE-1, 4 through 9 (7 tests)
- Straight trucks	0.059	- BD-5, 7, 9 (3 tests)
- Combined	0.023	- BD-5,7,9 and BE-1, 4 through 9 (10 tests)
Rail shipping	0.0022	Arithmetic average of BE-102 through 108 (6 tests)
Rail receiving	0.0077	Assumed analogy with hopper truck receiving. Arithmetic average of BE-1, 4 through 9 (7 tests)
Internal handling	0.034	Arithmetic average of runs BD-102 through 104, 115, 116, 118 through 120 and BF-1 through 6 (14 tests)

Table 10 summarizes the uncontrolled TP emission factors obtained during the field testing. Note that, because of the way isokinetic corrections were applied, these values represent conservative upper bounds on actual TP emission factors.

Table 10. Summary of Uncontrolled TP Emission Factors

Operation	TP emission factor (lb/ton)[a]	Basis for factor
Truck shipping	0.16	Arithmetic average of runs BD-1, 4, 6, 8 and BE-201, 202 (6 tests)
Truck receiving		Arithmetic average of runs
- Hopper bottom trucks	0.032	- BE-1, 4 through 6 (4 tests)
- Straight trucks	0.30	- BD-5, 7, 9 (3 tests)
- Combined	0.15	- BD-5,7,9 and BE-1, 4 through 6 (7 tests)
Rail shipping	0.027	Arithmetic average of BE-102 through 104 (3 tests)
Rail receiving	0.032	Assumed analogy with hopper truck receiving. Arithmetic average of BE-1, 4 through 6 (4 tests)
Internal handling	0.060	Arithmetic average of runs BD-102 through 104, 115, 116, 118 through 120 and BF-2 and 4 (10 tests)

[a] These values represent conservative upper bounds on "true" TP emission factors. See the discussion about isokinetic corrections in Section 3.

These emission factors generally agree well with the interim factors adopted by EPA in November 1995. Although the factors for shipping and receiving are higher, the emission factor for internal emissions is lower. Some difference in emissions data between the "Interim Section 9.9.1: Grain Elevators and Processes" and the test results was expected.

Section 5
References

1. Midwest Research Institute, "Emission Factor Documentation for AP-42 Section 9.9.1: Grain Elevators and Grain Processing Plants," EPA Contract No. 68-D2-0159, Work Assignment No. I-08, May 1994.

2 Midwest Research Institute, "Tests of Oil Suppression of PM-10 at Grain Elevators," EPA Contract No. 68-D2-0165, Work Assignment No. 2-32, November 1994.

3. Midwest Research Institute, "PM-10 Test Strategies for Grain Elevators," EPA Contract No. 68-D2-0165, Work Assignment Nos. 1-30 and 2-32, January 1995.

4. Davies, C. N., "The Entry of Aerosols in Sampling Heads and Tubes," *British Journal of Applied Physics*, 2:921, 1968.

5. Lai, F. S. et al., "Reducing Grain Dust with Oil Additives," *Transactions of the ASAE*, 6:1626, 1981.

Appendix

Measured Control Effectiveness

As discussed in Section 3 of the report, a secondary objective of the field program was to develop additional test data on the effectiveness of different control measures. This appendix describes results from those tests.

A.1 Country Elevator Oil Suppression Tests

Although the country elevator has an oil suppression system, it does not regularly apply oil to the grain received. The facility agreed to operate the system on a limited basis for testing purposes. Thus, the results obtained during the BD tests reference freshly oiled grains. To obtain information on how oil can become more effective with the greater mixing that occurs with repeated handling, controlled tests were conducted in pairs. The first test involved freshly oiled grain. Thereafter, the second test in the sequence used the same grain in a second "turn"; no additional oil was applied.

The first controlled test sequence involved internal handling of wheat (tests BD-107 and 108). When referenced against a mean uncontrolled PM10 emission factor of 0.021 lb/ton, the first and second turns resulted in efficiencies of 16% and 48%, respectively. Note, however, that the facility reported low pressure when applying the oil. For this reason, a second wheat test sequence was conducted (BD-113 and 114). Here, the oil pressure was reported as normal and the first and second turns resulted in 68% and 64% efficiency, respectively.

A similar test sequence of the internal handling of oiled corn was conducted at the country elevator. Referenced to an uncontrolled PM10 emission factor of 0.023 lb/ton, the first and second turns exhibited 29% and 78%, respectively.

A second corn test sequence (BD-10 and 11) of shipping emissions was conducted. Again, the corn was first oiled and then handled. The first turn resulted in no observable control. The corn was re-elevated and loaded a second time. For that test, an emission factor of 0.0203 lb/ton was found. This represented a 30% reduction from the uncontrolled average of 0.0295 lb/ton. Even more importantly, the second test represents a 60% reduction from the first turn.

A.2 Terminal 1 Oil Suppression Tests

Additional controlled tests were conducted at Terminal 1. Unlike the country elevator, Terminal 1 routinely oils all grains at the time of receipt. Both controlled test sequences involved railcar shipping. Tests BE-111 and 113 were conducted on oiled wheat, and averaged 78% control of PM10 emissions. Tests BE-109 and 110 (conducted on oiled soybeans) did not exhibit any observable control when referenced against the average uncontrolled emission factor from Tests BE-106 to 108.

A.3 Dust Aspiration Tests

In addition to the tests of oil suppression, limited effort was directed toward characterizing the effectiveness of active ventilation on dust sources. Tests BD-106 and 110 were conducted with the headhouse aspiration systems activated at the country elevator. The average result of 0.0088 lb/ton represents a reduction of approximately 60% from the mean uncontrolled PM10 emission factor of 0.021 lb/ton.

Test BE-105 was conducted with the dust pickup activated at the Terminal 1 railcar loading facility, and a reduction in dust emissions of 77% was found.

Additional efficiencies for different types of control equipment have been listed in Appendix C.2 Generalized Particle Size Distribution in Supplement A to AP-42 dated September 1990.