Note: This is a reference cited in *AP 42, Compilation of Air Pollutant Emission Factors, Volume I Stationary Point and Area Sources.* AP42 is located on the EPA web site at www.epa.gov/ttn/chief/ap42/

The file name refers to the reference number, the AP42 chapter and section. The file name "ref02_c01s02.pdf" would mean the reference is from AP42 chapter 1 section 2. The reference may be from a previous version of the section and no longer cited. The primary source should always be checked.

Background Report Reference

AP-42 Section Number: 9.9.1

Background Report Section: 4

Reference Number: 23

Title: Stationary Source Testing of a Country Grain Evaluator at The Great Bend Cooperative Association Elevator B, Great Bend, Kansas

Midwest Research Institute

April 1976

STATIONARY SOURCE TESTING OF A COUNTRY GRAIN ELEVATOR

at

The Great Bend Cooperative Association
Elevator B
Great Bend, Kansas

by

William H. Maxwell
Midwest Research Institute

FINAL REPORT
April 29, 1976

EPA Contract No. 68-02-1403
MRI Project No. 3927-C(19)

For

National Air Data Branch
Office of Air Quality Planning and Standards
Environmental Protection Agency
Research Triangle Park, North Carolina 27711

Attn: Mr. Thomas F. Lahre

PREFACE

The work reported herein was conducted by Midwest Research Institute (MRI) under Environmental Protection Agency (EPA) Contract No. 68-02-1403, Task No. 19.

The project was under the technical supervision of Mr. Paul C. Constant, Jr., Head, Environmental Measurements Section of the Physical Sciences Division. Mr. William H. Maxwell served as crew chief and was assisted by Mr. Thomas Merrifield. The analysis of the samples was done by Ms. Carol Green. Mr. Thomas Merrifield was responsible for the data reduction and computer analysis.

MIDWEST RESEARCH INSTITUTE

Paul C. Constant, Jr.
Program Manager

Approved:

L. J. Shannon, Assistant Director
Physical Sciences Division

TABLE OF CONTENTS

		Page
I.	Introduction	1
II.	Summary and Discussion of Results	1
	A. Soybeans	1
	B. Wheat	4
	C. Corn	8
	D. Milo	8
III.	Process Description and Operation	13
	A. Process Description	13
	B. Process Operation	15
IV.	Location of Sample Points	21
V.	Sampling and Analytical Procedures	21
Appendix A - Results of Analysis - Printout of Computer Computations		23
Appendix B - Sample Calculations		52

List of Figures

Figure	Title	Page
1	Schematic of Process Operation--Great Bend, Kansas, Cooperative Association, Elevator B	14
2	Schematic of Sampling Site--Load-Out	16
3	Schematic of Sampling Site--Tunnel Belt	17
4	Schematic of Sampling Site--Bin Vent	18

List of Tables

Table	Title	Page
1	Summary of Emission Factors and Approximate Catch Size Fractions	2
2	Summary of Particulate Results - Soybeans	3
3	Approximate Particulate Catch - Probe-Cyclone Versus Filter (Soybeans)	5
4	Summary of Particulate Results - Wheat	6
5	Approximate Particulate Catch - Probe-Cyclone Versus Filter (Wheat)	7
6	Summary of Particulate Results - Corn	9
7	Approximate Particulate Catch - Probe-Cyclone Versus Filter (Corn)	10
8	Summary of Particulate Results - Milo	11
9	Approximate Particulate Catch - Probe-Cyclone Versus Filter (Milo)	12
10	Summary of Grain Data Versus Sampling Time	19
11	Location of Sample Points	22
A-1	Particulate Data and Calculated Values - Run 1-LOS	24
A-2	Particulate Data and Calculated Values - Run 2-LOS	25
A-3	Particulate Data and Calculated Values - Run 3-LOW	26
A-4	Particulate Data and Calculated Values - Run 4-TBW	27
A-5	Particulate Data and Calculated Values - Run 5-BVW	28
A-6	Particulate Data and Calculated Values - Run 6-LOW	29
A-7	Particulate Data and Calculated Values - Run 7-BVW	30
A-8	Particulate Data and Calculated Values - Run 8-TBC	31
A-9	Particulate Data and Calculated Values - Run 9-TBC	32

List of Tables (Concluded)

Table	Title	Page
A-10	Particulate Data and Calculated Values - Run 10-TBM . . .	33
A-11	Particulate Data and Calculated Values - Run 11-BVM . . .	34
A-12	Particulate Data and Calculated Values - Run 12-TBM . . .	35
A-13	Particulate Emission Data	36
A-14	Particulate Emission Data (Metric Results).	40
A-15	Summary of Results.	44
A-16	Summary of Results--Metric Units.	48

I. INTRODUCTION

This report presents the results of source testing performed during the period October 29 to 31, 1975, by Midwest Research Institute (MRI) on three activities of the Great Bend Cooperative Association, Elevator B, at Great Bend, Kansas. Testing for particulate emissions was conducted on the ducts of the dust emission handling system during periods of grain load-out, bin transfer, and bin loading (venting), all batch or semicontinuous processes.

All tests were conducted on the ducts prior to the cyclone control device. Tests were conducted in accordance with the Federal Register, Vol. 36, No. 247, Part II, December 23, 1971, except as may be defined later in this report.

The following sections of this report present:

1. The summary and discussion of results;

2. The process description and operation;

3. The location of the sampling points; and

4. The sampling and analytical procedures.

II. SUMMARY AND DISCUSSION OF RESULTS

Table 1 presents a summary of the emission factors and approximate catch size fractions for all of the tests.

A. Soybeans

Table 2 presents a summary of the particulate load results and the calculated emission factors for the dust-handling system during soybean load-out. Data are given only for the "front half" of the sampling train as specified in the referenced Federal Register and in the task order. These data are presented as grains per dry standard cubic foot (gr/dscf), milligrams per normal cubic meter (mg/ncm), pounds per hour (lb/hr), kilograms per hour (kg/hr), pounds emissions per ton grain handled (lb/ton), and kilograms emissions per metric ton grain handled (kg/Mton). Computer printouts of the field data and reductions are found in Appendix A. Sample calculations are found in Appendix B.

TABLE 1

SUMMARY OF EMISSION FACTORS AND APPROXIMATE CATCH SIZE FRACTIONS

Grain	Run[d/]	Load-Out[a/] Emission Factor lb/ton[e/]	Load-Out[a/] Emission Factor kg/Mton[e/]	Load-Out[a/] Approximate Percent Catch > 5 μ	Tunnel Belt[b/] Emission Factor lb/ton[e/]	Tunnel Belt[b/] Emission Factor kg/M ton[e/]	Tunnel Belt[b/] Approximate Percent Catch > 5 μ	Bin Vent[c/] Emission Factor lb/ton[e/]	Bin Vent[c/] Emission Factor kg/M ton[e/]	Bin Vent[c/] Approximate Percent Catch > 5 μ
Soybeans	1-LOS	3.40	1.70	96	-	-	-	-	-	-
	2-LOS	2.05	1.03	97	-	-	-	-	-	-
Wheat	3-LOW	0.77	0.38	97	-	-	-	-	-	-
	4-TBW	-	-	-	0.37	0.18	97	-	-	-
	5-BVW	-	-	-	-	-	-	0.02	0.01	85
	6-LOW	0.58	0.29	97	-	-	-	-	-	-
	7-BVW	-	-	-	-	-	-	0.02	0.01	79
Corn	8-TBC	-	-	-	0.89	0.45	99	-	-	-
	9-TBC	-	-	-	0.92	0.46	99	-	-	-
Milo	10-TBM	-	-	-	0.58	0.29	99	-	-	-
	11-BVM	-	-	-	-	-	-	0.03	0.02	90
	12-TBM	-	-	-	0.68	0.34	99	-	-	-
Soybeans	Average	2.72	1.36	96	-	-	-	-	-	-
Wheat	Average	0.68	0.34	97	0.37	0.18	97	0.02	0.01	83
Corn	Average	-	-	-	0.91	0.45	99	-	-	-
Milo	Average	-	-	-	0.63	0.32	99	0.03	0.02	90

a/ Includes tunnel belt drop point, pulley hoods, leg cross belt, leg boots, and grain scale.
b/ Includes tunnel belt drop point, pulley hoods, leg cross belt, and leg boot.
c/ Bin vent only; grain scale bin for wheat; standard bin for milo.
d/ _-LO- = Load-out
_-TB_ = Tunnel belt (Bin transfer)
_-BV_ = Bin vent
_-__S = Soybeans
_-__W = Wheat
_-__C = Corn
_-__M = Milo
e/ lb/ton = Founds emissions per ton grain handled.
kg/Mton = Kilograms emissions per metric ton grain handled.

TABLE 2

SUMMARY OF PARTICULATE RESULTS - SOYBEANS

Run	Date	Particulate Load				Emission Factor	
		gr/dscf[a]	mg/ncm[a]	lb/hr[a]	kg/hr[a]	lb/ton[a]	kg/Mton[a]
	Load-Out[b]						
1-LOS	October 29	4.691	10,700	340	154	3.40	1.70
2-LOS	October 29	2.886	6,600	205	93	2.05	1.03
	Average	3.789	8,670	272	124	2.72	1.36

a/ gr/dscf = Grains per dry standard cubic foot
mg/ncm = Milligrams per normal cubic meter
lb/hr = Pounds per hour
kg/hr = Kilograms per hour
lb/ton = Pounds emissions per ton grain handled
kg/Mton = Kilograms emissions per metric ton grain handled

b/ Includes tunnel belt drop point, pulley hoods, leg cross belt, leg boots, and grain scale.

Sampling volumes were 31.42 dscf (0.89 ncm) and 30.72 dscf (0.87 ncm). Values for the percent isokinetic sampling rate were 98.5 and 98.6.

As no combustion was involved, no Orsat analyses were performed on the gas stream. Ambient air values of 20.9% oxygen, 79.1% nitrogen, and 0.0% carbon dioxide and carbon monoxide were used for the gas stream composition. Percent moisture determinations were obtained using a sling psychrometer and a psychrometric chart. The value for the volume of water collected needed for entry into the computer program was back-calculated from this percent moisture value using the standard equation. The moisture percentage used was 0.6% for both runs.

Table 3 presents an approximate breakdown of the weight of material collected in the probe-cyclone and filter for each run and the approximate size fraction this weight represents. Information obtained from the Research Appliance Company indicates that the cyclone will retain particles greater than 5 μ diameter, irrespective of flow rate. From this information, it appears that approximately 96% of the material collected during the load-out tests is of size greater than 5 μ.

B. Wheat

Table 4 presents a summary of the particulate load results and the calculated emission factors for the dust handling system during wheat load-out, tunnel belt, and bin venting operations. Data are presented as for soybeans. Computer printouts of the field data and reductions are found in Appendix A. Sample calculations are found in Appendix B.

Sampling volumes ranged from 20.41 dscf (0.58 ncm) to 47.96 dscf (1.36 ncm). Values for the percent isokinetic sampling rate varied from 97.7 to 99.5.

Again, no Orsat values were obtained, ambient air composition values being used as before. Percent moisture values, as obtained for soybeans, ranged from 0.8 to 1.3%.

Table 5 presents an approximate breakdown of the weight of material collected in the probe-cyclone and filter for each run and the approximate size fraction this weight represents. It appears that approximately 97% of the material collected during the load-out tests, 97% of the material collected during the bin transfer test, and 83% of the material collected during the bin vent tests is of size greater than 5 μ.

TABLE 3

APPROXIMATE PARTICULATE CATCH - PROBE-CYCLONE VERSUS FILTER (SOYBEANS)

Run	Date	Probe-Cyclone (mg) > 5 μ[a/]	Filter (mg) < 5 μ, > 0.3 μ[a/]	Probe-Cyclone Versus Total (%)
Load-Out [b/]				
1-LOS	October 29	9,149	422	96
2-LOS	October 29	5,584	173	97
Average		7,366	297	96

a/ Size fraction information obtained from Research Appliance Company.

b/ Includes tunnel belt drop point, pulley hoods, leg cross belt, leg boots, and grain scale.

TABLE 4

SUMMARY OF PARTICULATE RESULTS - WHEAT

Run	Date	Particulate Load gr/dscf[a]	mg/ncm[a]	lb/hr[a]	kg/hr[a]	Emission Factor lb/ton[a]	kg/Mton[a]
Load-Out [b]							
3-LOW	October 29	1.040	2,380	76.6	34.7	0.766	0.383
6-LOW	October 31	0.849	1,940	58.3	26.7	0.583	0.292
Average		0.944	2,160	67.7	30.7	0.677	0.338
Tunnel Belt [c]							
4-TBW	October 29	0.587	1,340	43.9	19.9	0.366	0.183
Average		0.587	1,340	43.9	19.9	0.366	0.183
Bin Vent [d]							
5-BVW	October 30	0.469	1,070	1.5	0.7	0.015	0.008
7-BVW	October 31	0.674	1,540	2.1	0.9	0.021	0.011
Average		0.572	1,300	1.8	0.8	0.018	0.009

a/ gr/dscf = Grains per dry standard cubic foot
mg/ncm = Milligrams per normal cubic meter
lb/hr = Pounds per hour
kg/hr = Kilograms per hour
lb/ton = Pounds emissions per ton grain handled
kg/Mton = Kilograms emissions per metric ton grain handled.

b/ Includes tunnel belt drop point, pulley hoods, leg cross belt, leg boots, and grain scale.

c/ Includes tunnel belt drop point, pulley hoods, leg cross belt, and leg boot.

d/ Bin vent only (grain scale bin).

TABLE 5

APPROXIMATE PARTICULATE CATCH - PROBE-CYCLONE VERSUS FILTER (WHEAT)

Run	Date	Probe-Cyclone (mg) > 5 μ a/	Filter (mg) < 5 μ, > 0.3 μ a/	Probe-Cyclone Versus Total (%)
Load-Out b/				
3-LOW	October 29	2,080	74	97
6-LOW	October 31	1,597	43	97
Average		1,838	58	97
Tunnel Belt c/				
4-TBW	October 29	1,192	39	97
Average		1,192	39	97
Bin Vent d/				
5-BVW	October 30	1,239	222	85
7-BVW	October 31	706	186	79
Average		972	205	83

a/ Size fraction information obtained from Research Appliance Company.
b/ Includes tunnel belt drop point, pulley hoods, leg cross belt, leg boots, and grain scale.
c/ Includes tunnel belt drop point, pulley hoods, leg cross belt, and leg boot
d/ Bin vent only (grain scale bin).

C. Corn

Table 6 presents a summary of the particulate load results and the calculated emission factors for the duct-handling system during corn bin transfer. Data are presented as for soybeans. Computer printouts of the field data and reductions are found in Appendix A. Sample calculations are found in Appendix B.

Sampling volumes were 28.09 dscf (0.80 ncm) and 29.51 dscf (0.84 ncm). Values for the percent isokinetic sampling rate were 97.9 and 97.8.

Ambient air composition values were again used, and the percent moisture values were 1.5 and 1.2% for the first and second runs, respectively.

Table 7 presents the approximate breakdown of the weight of material collected in the probe-cyclone and filter for each run and the approximate size fraction this weight represents. It appears that approximately 99% of the material collected during the bin transfer tests is of size greater than 5 μ.

D. Milo

Table 8 presents a summary of the particulate load results and the calculated emission factors for the dust-handling system during milo (grain sorghum) tunnel belt and bin venting operations. Data are presented as for soybeans. Computer printouts of the field data and reductions are found in Appendix A. Sample calculations are found in Appendix B.

Sampling volumes ranged from 17.18 dscf (0.49 ncm) to 28.93 dscf (0.82 ncm). Values for the percent isokinetic sampling rate ranged from 98.0 to 99.0.

Ambient air composition values were again used and the percent moisture values ranged from 1.2 to 1.7%.

Table 9 presents an approximate breakdown of the weight of material collected in the probe-cyclone and filter for each run and the approximate size fraction this weight represents. It appears that approximately 99 and 90% of the material collected during the tunnel belt and bin vent tests, respectively, is of size greater than 5 μ.

TABLE 6

SUMMARY OF PARTICULATE RESULTS - CORN

Run	Date	Particulate Load				Emission Factor	
		gr/dscf[a]	mg/ncm[a]	lb/hr[a]	kg/hr[a]	lb/ton[a]	kg/Mton[a]
Tunnel Belt[b]							
8-TBC	October 31	1.644	3,760	107	48.7	0.892	0.446
9-TBC	October 31	1.602	3,660	110	49.9	0.917	0.459
Average		1.623	3,710	109	49.3	0.908	0.454

a/ gr/dscf = Grains per dry standard cubic foot
mg/ncm = Milligrams per normal cubic meter
lb/hr = Pounds per hour
kg/hr = Kilograms per hour
lb/ton = Pounds emissions per ton grain handled
kg/Mton = Kilograms emissions per metric ton grain handled

b/ Includes tunnel belt drop point, pulley hoods, leg cross belt, and leg boot.

TABLE 7

APPROXIMATE PARTICULATE CATCH - PROBE-CYCLONE VERSUS FILTER (CORN)

Run	Date	Probe-Cyclone (mg) > 5 μ[a/]	Filter (mg) < 5 μ, > 0.3 μ[a/]	Probe-Cyclone Versus Total (%)
Tunnel Belt[b/]				
8-TBC	October 31	2,982	17	99
9-TBC	October 31	3,051	19	99
Average		3,016	18	99

a/ Size fraction information obtained from Research Appliance Company.
b/ Includes tunnel belt drop point, pulley hoods, leg cross belt, and leg boot.

TABLE 8

SUMMARY OF PARTICULATE RESULTS - MILO

Run	Date	Particulate Load gr/dscf[a]	mg/ncm[a]	lb/hr[a]	kg/hr[a]	Emission Factor lb/ton[a]	kg/Mton[a]
Tunnel Belt[b]							
10-TBM	October 31	1.043	2,390	70.1	31.8	0.584	0.292
12-TBM	October 31	1.244	2,850	81.9	37.1	0.683	0.341
Average		1.144	2,620	76.0	34.5	0.633	0.317
Bin Vent[c]							
11-BVM	October 31	0.727	1,660	4.0	1.8	0.033	0.017
Average		0.727	1,660	4.0	1.8	0.033	0.017

a/ gr/dscf = Grains per dry standard cubic foot
mg/ncm = Milligrams per normal cubic meter
lb/hr = Pounds per hour
kg/hr = Kilograms per hour
lb/ton = Pounds emissions per ton grain handled
kg/Mton = Kilograms emissions per metric ton grain handled

b/ Includes tunnel belt drop point, pulley hoods, leg cross belt, and leg boot.

c/ Bin vent only (standard bin).

TABLE 9

APPROXIMATE PARTICULATE CATCH - PROBE-CYCLONE VERSUS FILTER (MILO)

Run	Date	Probe-Cyclone (mg) > 5 μ[a]	Filter (mg) < 5 μ, > 0.3 μ[a]	Probe-Cyclone Versus Total (%)
Tunnel Belt[b]				
10-TBM	October 31	1,946	14	99
12-TBM	October 31	2,270	20	99
Average		2,108	17	99
Bin Vent[c]				
11-BVM	October 31	733	78	90
Average		733	78	90

a/ Size fraction information obtained from Research Appliance Company.
b/ Includes tunnel belt drop point, pulley hoods, leg cross belt, and leg boot.
c/ Bin vent only (standard bin).

III. PROCESS DESCRIPTION AND OPERATION

The Great Bend Cooperative Association's Elevator B operates as a typical country grain elevator. It has a storage capacity of 570,000 bushels of grain. The agricultural area that the elevator serves primarily grows four grain crops: wheat, milo (grain sorghum), soybeans, and corn.

A. Process Description

The elevator receives grain direct from the farmer and immediately transfers it into bins. The grain may be held in storage for the farmer or processed for sale and shipment to a feed mill, grain mill, or terminal elevator. The grain may be dried at the elevator if wet, or handled as received. It also may be treated chemically if wet or to control insects.

A schematic diagram of the operation of Elevator B is shown in Figure 1. The grain is transported by the farmer to the elevator and dumped into the truck dump hopper. The elevator legs transport the grain to the headhouse where it is distributed into one of the several bins. Grain may also be circulated from bin to bin during treatment or cooling operations utilizing the tunnel belts and elevator legs.

Most grain handling activities are connected to the dust emission control system, thought by elevator personnel to have been constructed in the mid-1940's. All dust collection points are ducted to a common duct running from the basement area to the cyclone on the roof.

The ducting begins at the far ends of the tunnel belts with small hoods serving the belt pulleys. The ducts run the length of the tunnel belts to the center of the elevator building. Along this length, ducts serving the small dust hoods at each bin tunnel belt drop point join the common duct at intervals. At the center of the elevator building, ducts serving the elevator leg boots, leg cross belt, belt pulleys, and grain scale join the common duct. The dust duct then runs up the building wall to the fan at the elevator leg head level. Just below, at the gallery belt level, further ducting joins the system. Two ducts begin at the far end of the gallery belts at the pulley hoods. Running the length of the gallery, they are joined by the bin vent ducts at intervals. The bin vents are ducts inserted into the bin near the grain entry hole, flush with the bin roof. Other ducts serving the elevator leg transfer points (gallery belt hoods) also meet the common duct at this point. Just before the fan, the duct serving the one controlled elevator leg head joins the system. From the fan, the dust control ducting is directed to two cyclones in parallel. However, as one cyclone is almost completely filled with dust, essentially only one cyclone is in operation. The collected dust is trucked to landfill but is not weighed or estimated as to amount.

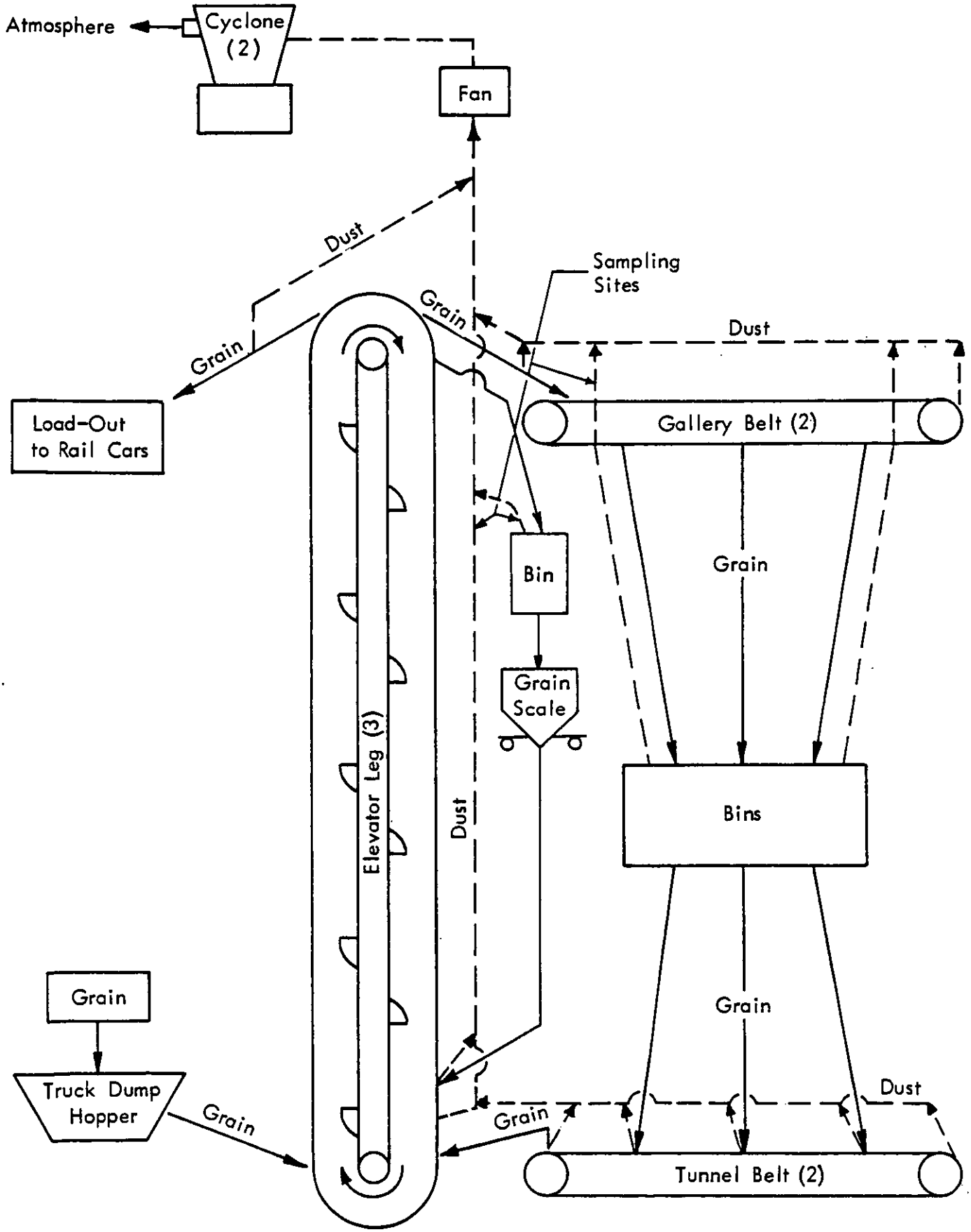

Figure 1 - Schematic of Process Operation--Great Bend, Kansas, Cooperative Association, Elevator B

The dust control fan is run at all times that grain handling is taking place. Each separate duct is equipped with a slide valve so that those ducts serving inactive operations may be closed off, providing adequate air flow for active operations.

B. Process Operation

The purpose of the tests was to measure uncontrolled emission levels during normal elevator operation and use these data to compute uncontrolled emission factors. Standard operation of the elevator is to give priority to grain load-out operations over grain turning or treating. Load-out operations involve the tunnel belt, leg cross belt, two of the three elevator legs, and the grain scale. The third elevator leg may be used to handle grain received by the elevator from farmers, if necessary. After load-out, the tunnel belt, leg cross belt, one elevator leg, and gallery belt may be used for grain turning (bin transfer) used to treat, aerate, or cool stored grain.

This priority system was followed during the test series. No grain was received during load-out tests. Every effort was made to have open only those ducts serving active operations. The dust ducts used during load-out tests were those controlling the bin tunnel belt drop point, tunnel belt pulleys, elevator xeg boots, leg cross belt, and grain scale. Those used for the tunnel belt (bin transfer) tests were the same with the exclusion of one elevator leg boot and the grain scale. The bin vent tests involved only that vent serving the bin being filled. Figures 2, 3, and 4 show schematics of these operations. Note that neither the load-out nor the bin transfer tests included either the leg transfer points (gallery belt hoods) or lone leg head duct that are shown meeting the common duct above the sampling sites in Figure 1.

Grain handling rates were obtained from elevator personnel. These were approximately 200,000 lb/hr (90,720 kg/hr) for load-out operations and 240,000 lb/hr (108,860 kg/hr) for bin transfer operations. Table 10 presents a summary of the grain data versus the sampling periods.

Cursory observation of the dust emission control system indicates a fairly good capture efficiency. The hoods seem to trap most of the dust with little entrainment of grain. No observations could be made on the closed systems, such as the elevator leg, boots and heads.

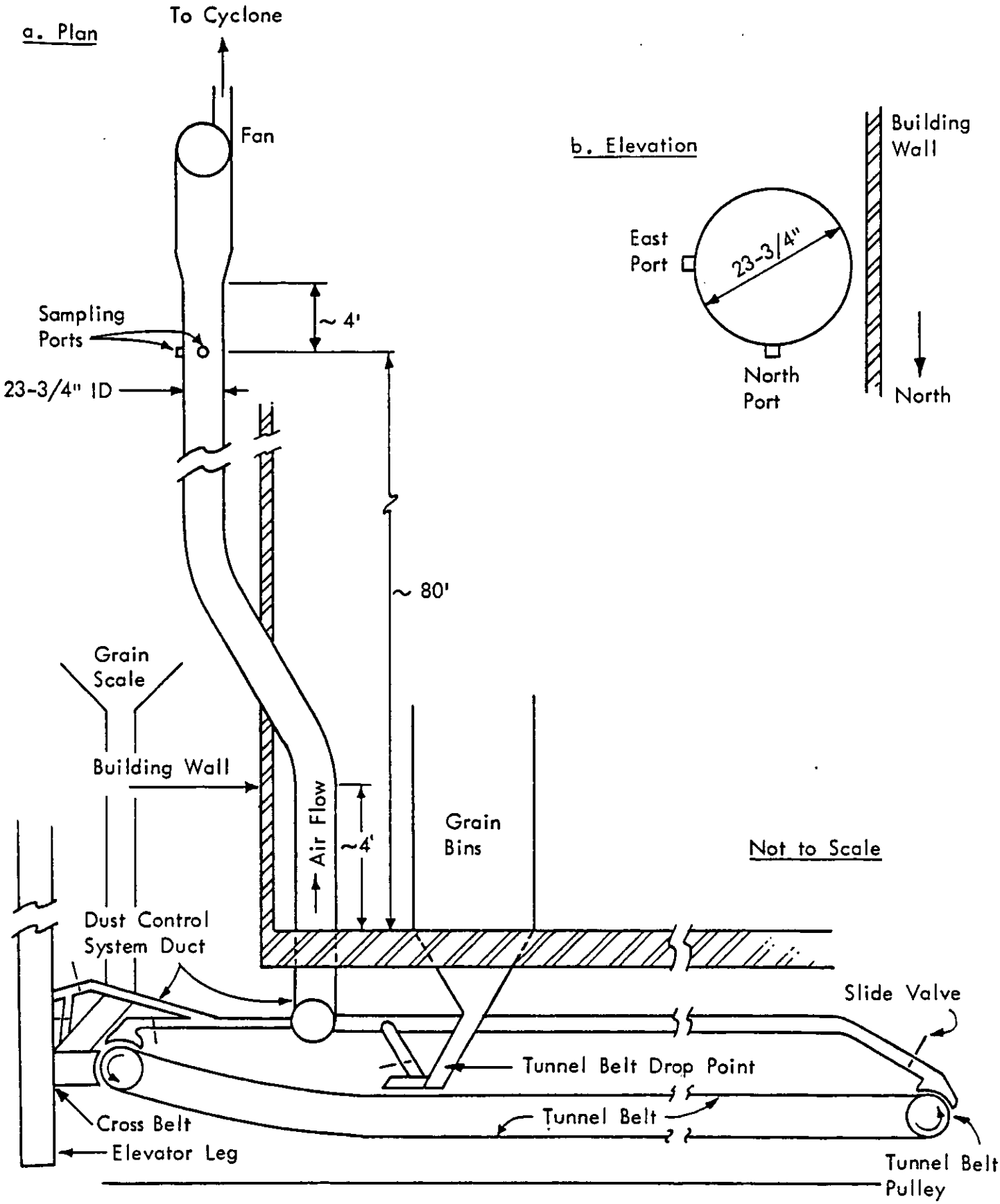

Figure 2 - Schematic of Sampling Site--Load-Out

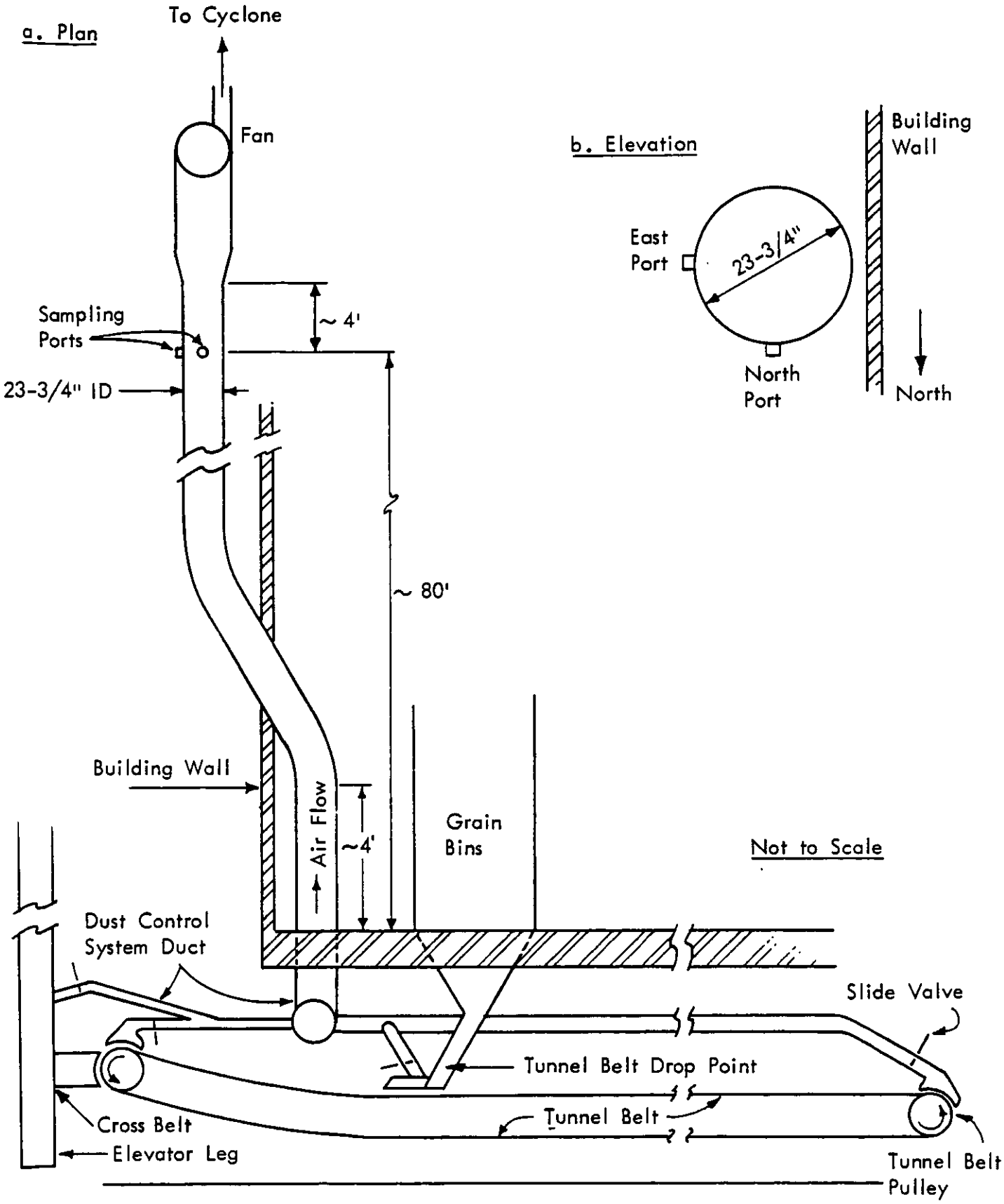

Figure 3 - Schematic of Sampling Site--Tunnel Belt

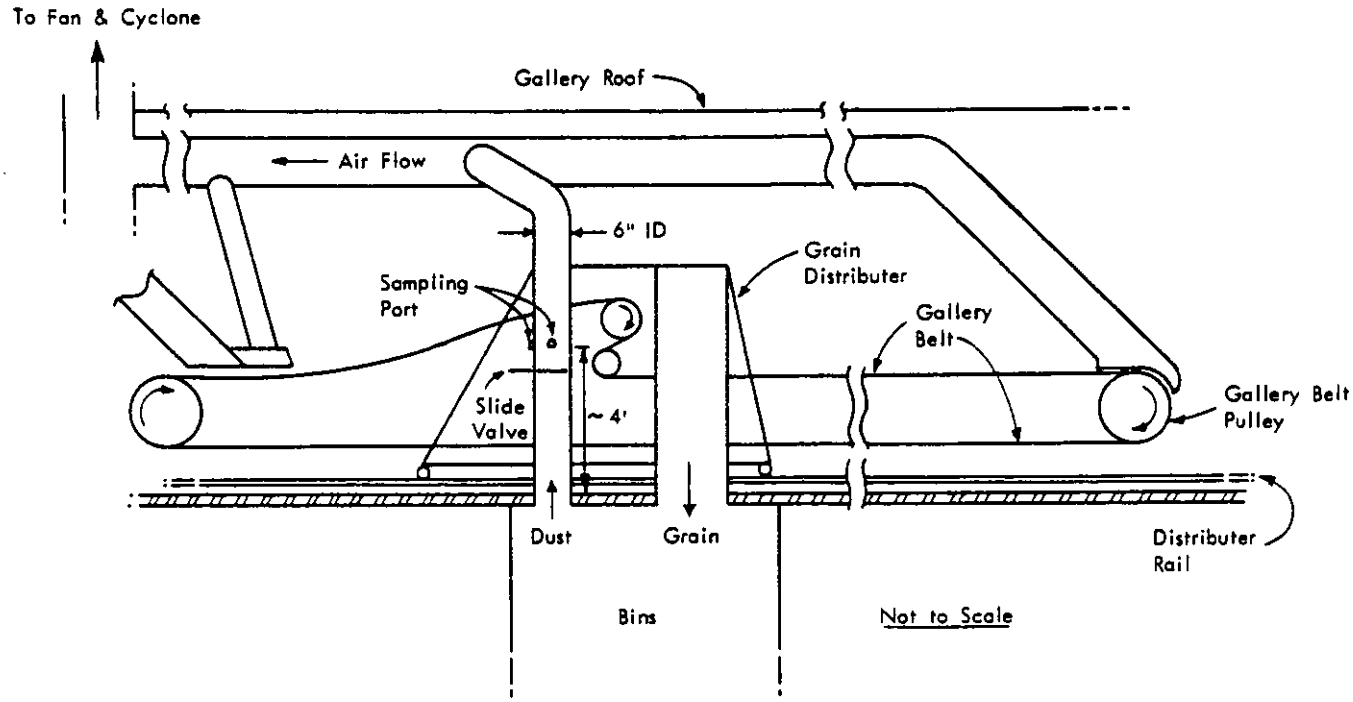

a. Standard Bin

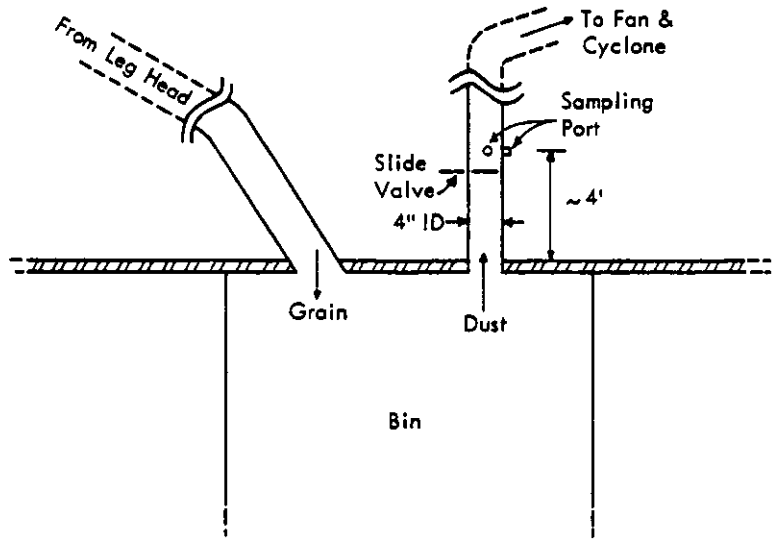

b. Grain Scale Bin

Figure 4 - Schematic of Sampling Site--Bin Vent

TABLE 10

SUMMARY OF GRAIN DATA VERSUS SAMPLING TIME

Run	Date	Sampling Time	Sampling Duration (min)	Grain Weight lb	Grain Weight kg
Soybeans: Load-Out					
1-LOS	October 29	0929-0959	30	100,000	45,360
		1004-1034	30	100,000	45,360
			60	200,000	90,720
				(100 tons)	(90.7 Mtons)
2-LOS	October 29	1054-1124	30	100,000	45,360
		1127-1157	30	100,000	45,360
			60	200,000	90,720
				(100 tons)	(90.7 Mtons)
Wheat: Load-Out					
3-LOW	October 29	1535-1605	30	100,000	45,360
		1609-1639	30	100,000	45,360
			60	200,000	90,720
				(100 tons)	(90.7 Mtons)
6-LOW	October 31	0903-0933	30	100,000	45,360
		0937-1007	30	100,000	45,360
			60	200,000	90,720
				(100 tons)	(90.7 Mtons)
Wheat: Tunnel Belt					
4-TBW	October 29	1653-1723	30	120,000	54,430
		1727-1757	30	120,000	54,430
			60	240,000	108,860
				(120 tons)	(108.9 Mtons)
Wheat: Bin Vent					
5-BVW	October 30	0902-0932	30	100,000	45,360
		0937-1007	30	100,000	45,360
			60	200,000	90,720
				(100 tons)	(90.7 Mtons)

TABLE 10 (Concluded)

Run	Date	Sampling Time	Sampling Duration (min)	Grain Weight lb	Grain Weight kg
7-BVW	October 31	0902-0907	5	16,667	7,560
		0918-0943	25	83,333	37,800
		0949-1019	30	100,000	45,360
			60	200,000	90,720
				(100 tons)	(90.7 Mtons)
Corn: Tunnel Belt					
8-TBC	October 31	1200-1205	5	20,000	9,070
		1235-1300	25	100,000	45,360
		1305-1335	30	120,000	54,430
			60	240,000	108,860
				(120 tons)	(108.9 Mtons)
9-TBC	October 31	1349-1419	30	120,000	54,430
		1422-1452	30	120,000	54,430
			60	240,000	108,860
				(120 tons)	(108.9 Mtons)
Milo: Tunnel Belt					
10-TBM	October 31	1515-1545	30	120,000	54,430
		1549-1619	30	120,000	54,430
			60	240,000	108,860
				(120 tons)	(108.9 Mtons)
12-TBM	October 31	1645-1715	30	120,000	54,430
		1719-1749	30	120,000	54,430
			60	240,000	108,860
				(120 tons)	(108.9 Mtons)
Milo: Bin Vent					
11-BVM	October 31	1527-1557	30	120,000	54,430
		1603-1633	30	120,000	54,430
			60	240,000	108,860
				(120 tons)	(108.9 Mtons)

IV. LOCATION OF SAMPLE POINTS

Figures 2 and 3 show a schematic of the load-out and tunnel belt sampling sites, respectively. Figure 4 presents a similar layout for the bin vent system. The location of the sampling sites was in accordance with Federal Register guidelines.

Table 11 presents the sampling point locations for the ducts.

V. SAMPLING AND ANALYTICAL PROCEDURES

Particulate samples were taken with Research Appliance Company Model 2243 "Stacksamplr" equipment, modified by MRI. Sampling train specifications were in compliance with the Federal Register, Vol. 36, No. 247, Part II, December 23, 1971.

A preliminary velocity traverse was made for each duct. A stainless steel probe liner was used for all tests. Since the gas stream was ambient air at near ambient temperature, no probe or filter heaters were used.

Due to space limitations on the bin vent ducts, a right-angle, stainless steel extension was made for use on one traverse. As the bin vent ducts were of small diameter, velocity traverses were taken separately prior to the sampling traverses for each traverse in order to lessen the flow disturbances possible from the large pitob in the small duct.

Sampling times were chosen as 1 hr upon the request and approval of the project monitor. Five-minute sample times per point were used on the load-out and tunnel belt tests while 7-1/2 min sample times per point were used on the bin vent tests.

As has been mentioned previously in the report, percent moisture values for the gas stream were obtained using a sling psychrometer and a psychrometric chart. The gas composition of the stream was taken to be that of ambient air.

Analysis of the samples was in compliance with the referenced Federal Register.

TABLE 11

LOCATION OF SAMPLE POINTS

Load-Out and Tunnel Belt

Duct ID = 23.75 in.

Point	Fraction of Duct ID (%)	Distance From Inside Wall (in.)
1	4.4	1-0
2	14.7	3-1/2
3	29.5	7-0
4	70.5	16-3/4
5	85.3	20-1/4
6	95.6	22-3/4

Bin Vent (Wheat)

Duct ID = 4.0 in.

1	6.7	1-0
2	25.0	1-1/4
3	75.0	2-3/4
4	93.3	3-0

Bin Vent (Milo)

Duct ID = 5.875 in.

1	6.7	1-0
2	25.0	1-1/2
3	75.0	4-3/8
4	93.3	4-7/8

APPENDIX A

RESULTS OF ANALYSIS - PRINTOUT OF COMPUTER COMPUTATIONS

TABLE A-1

PARTICULATE DATA AND CALCULATED VALUES

RUN- 1-LOS DATE- 10-29-75

ATMOS TEMP (DG.F)	ATMOS PRES (I.HG)	STACK VAC (I.H2O)	H2O COND (ML)	PARTIC WT-PTL (MG)	PARTIC WT-TTL (MG)	STACK AREA (FT2)	INIT VOL (DCF)	PERC O2 DRY	PERC CO2 DRY	PERC CO DRY	PITOT TUBE COEF
50.0	28.44	-3.90	4.0	9570.00	9570.00	3.08	322.24	20.9	0.0	0.0	.746

PORT-POINT	SAMP TIME (MIN)	METER VOL (DCF)	DELTA P (I.H2O)	DELTA H (I.H2O)	TEMP IN (D.F)	TEMP OUT (D.F)	TRAIN VAC (I.HG)	STACK TEMP (D.F)	S.GEL TEMP (D.F)	PROBE T DIA (IN)	VEL (F[illegible])
N 1	5.00	324.59	.660	.940	48.0	48.0	2.5	45.0	50.0	.188	2429.0
N 2	5.00	326.75	.560	.800	54.0	49.0	2.5	46.0	50.0	.188	2239.6
N 3	5.00	329.27	.680	.970	60.0	50.0	2.5	46.0	50.0	.188	2468.0
N 4	5.00	332.27	1.100	1.550	68.0	52.0	2.5	46.0	50.0	.188	3138.9
N 5	5.00	335.22	1.000	1.420	76.0	54.0	2.5	46.0	50.0	.188	2992.8
N 6	5.00	337.96	.910	1.300	76.0	56.0	2.5	46.0	50.0	.188	2855.0
E 1	5.00	340.98	.980	1.400	76.0	60.0	2.5	46.0	50.0	.188	2962.8
E 2	5.00	343.68	.700	1.000	76.0	62.0	2.5	46.0	50.0	.188	2504.0
E 3	5.00	346.04	.730	1.050	76.0	62.0	2.5	46.0	50.0	.188	2557.1
E 4	5.00	348.78	.970	1.380	78.0	64.0	2.5	46.0	50.0	.188	2947.6
E 5	5.00	351.99	1.000	1.420	80.0	66.0	2.5	46.0	50.0	.188	2992.8
E 6	5.00	354.83	.940	1.350	84.0	66.0	2.5	46.0	50.0	.188	2901.7

TABLE A-2

PARTICULATE DATA AND CALCULATED VALUES

RUN- 2-LOS DATE- 10-29-75

ATMOS TEMP (DG.F)	ATMOS PRES (I.HG)	STACK VAC (I.H2O)	H2O COND (ML)	PARTIC WT-PTL (MG)	PARTIC WT-TTL (MG)	STACK AREA (FT2)	INIT VOL (DCF)	PERC O2 DRY	PERC CO2 DRY	PERC CO DRY	PITOT TUBE COEF
50.0	28.48	-3.90	3.9	5757.10	5757.10	3.08	354.83	20.9	0.0	0.0	.746

PORT-POINT	SAMP TIME (MIN)	METER VOL (DCF)	DELTA P (I.H2O)	DELTA H (I.H2O)	TEMP IN (D.F)	TEMP OUT (D.F)	TRAIN VAC (I.HG)	STACK TEMP (D.F)	S.GEL TEMP (D.F)	PROBE T DIA (IN)	VEL (FPM)
E 1	5.00	357.31	.600	.870	67.0	67.0	2.0	49.0	54.0	.188	2323.5
E 2	5.00	359.77	.640	.930	72.0	67.0	2.0	51.0	54.0	.188	2404.4
E 3	5.00	362.47	.980	1.400	77.0	67.0	2.5	50.0	54.0	.188	2972.4
E 4	5.00	365.47	1.000	1.400	82.0	68.0	2.5	49.0	54.0	.188	2999.6
E 5	5.00	368.38	.930	1.320	84.0	69.0	2.5	50.0	54.0	.188	2895.5
E 6	5.00	371.11	.840	1.200	86.0	70.0	2.5	51.0	54.0	.188	2754.6
N 1	5.00	373.87	.560	.810	84.0	71.0	2.0	50.0	54.0	.188	2246.9
N 2	5.00	375.69	.570	.820	86.0	72.0	2.0	50.0	54.0	.188	2266.9
N 3	5.00	378.24	.660	.940	86.0	72.0	2.5	51.0	54.0	.188	2441.7
N 4	5.00	381.20	1.100	1.580	88.0	72.0	2.5	51.0	54.0	.188	3152.2
N 5	5.00	384.50	1.100	1.580	92.0	72.0	2.5	51.0	54.0	.188	3152.2
N 6	5.00	387.41	.900	1.280	94.0	76.0	2.5	51.0	54.0	.188	2851.3

TABLE A-3

PARTICULATE DATA AND CALCULATED VALUES

RUN- 3-LOW DATE- 10-29-75

ATMOS TEMP (DG.F)	ATMOS PRES (I.HG)	STACK VAC (I.H2O)	H2O COND (ML)	PARTIC WT-PTL (MG)	PARTIC WT-TTL (MG)	STACK AREA (FT2)	INIT VOL (DCF)	PERC O2 DRY	PERC CO2 DRY	PERC CO DRY	PITOT TUBE COEF
61.0	28.40	-3.90	5.4	2153.60	2153.60	3.08	387.41	20.9	0.0	0.0	.746

PORT-POINT	SAMP TIME (MIN)	METER VOL (DCF)	DELTA P (I.H2O)	DELTA H (I.H2O)	TEMP IN (D.F)	TEMP OUT (D.F)	TRAIN VAC (I.HG)	STACK TEMP (D.F)	S.GEL TEMP (D.F)	PROBE T DIA (IN)	VEL (FPM)
N 1	5.00	390.24	.940	1.350	62.0	62.0	2.5	58.0	60.0	.188	2939.0
N 2	5.00	392.30	.550	.800	64.0	64.0	2.5	60.0	60.0	.188	2252.4
N 3	5.00	394.84	.810	1.190	70.0	64.0	2.5	60.0	60.0	.188	2733.5
N 4	5.00	397.99	1.000	1.410	76.0	65.0	2.0	60.0	60.0	.188	3037.2
N 5	5.00	400.96	.990	1.400	81.0	67.0	2.0	61.0	60.0	.188	3024.9
N 6	5.00	403.75	.870	1.250	86.0	70.0	2.5	61.0	60.0	.188	2835.6
E 1	5.00	406.43	.820	1.180	88.0	72.0	2.0	61.0	60.0	.188	2752.9
E 2	5.00	408.91	.710	1.030	90.0	74.0	2.0	62.0	60.0	.188	2564.1
E 3	5.00	411.98	.910	1.300	93.0	76.0	2.5	62.0	60.0	.188	2902.9
E 4	5.00	415.16	1.100	1.560	98.0	8.0	3.0	62.0	60.0	.188	3191.6
E 5	5.00	418.35	1.200	1.700	100.0	80.0	4.0	63.0	60.0	.188	3336.7
E 6	5.00	421.40	1.000	1.410	104.0	82.0	2.5	63.0	60.0	.188	3045.9

TABLE A-4

PARTICULATE DATA AND CALCULATED VALUES

RUN- 4-TBW DATE- 10-29-75

ATMOS TEMP (DG.F)	ATMOS PRES (I.HG)	STACK VAC (I.H2O)	H2O COND (ML)	PARTIC WT-PTL (MG)	PARTIC WT-TTL (MG)	STACK AREA (FT2)	INIT VOL (DCF)	PERC O2 DRY	PERC CO2 DRY	PERC CO DRY	PITOT TUBE COEF
61.0	28.35	-3.90	5.5	1230.40	1230.40	3.08	421.40	20.9	0.0	0.0	.746

PORT-POINT	SAMP TIME (MIN)	METER VOL (DCF)	DELTA P (I.H2O)	DELTA H (I.H2O)	TEMP IN (D.F)	TEMP OUT (D.F)	TRAIN VAC (I.HG)	STACK TEMP (D.F)	S.GEL TEMP (D.F)	PROBE T DIA (IN)	VEL (FPM)
E 1	5.00	424.18	.850	1.200	86.0	81.0	2.5	64.0	53.0	.188	2813.4
E 2	5.00	426.73	.710	1.020	88.0	81.0	2.0	64.0	53.0	.188	2571.3
E 3	5.00	429.60	.870	1.250	94.0	82.0	2.5	64.0	53.0	.188	2846.3
E 4	5.00	432.84	1.200	1.700	98.0	83.0	2.5	64.0	53.0	.188	3342.8
E 5	5.00	436.05	1.100	1.570	102.0	84.0	2.5	64.0	53.0	.188	3200.5
E 6	5.00	438.95	.930	1.330	103.0	84.0	2.5	64.0	53.0	.188	2942.8
N 1	5.00	442.27	1.200	1.700	100.0	84.0	2.5	63.0	53.0	.188	3339.6
N 2	5.00	444.88	.700	1.000	101.0	86.0	2.5	64.0	53.0	.188	2553.1
N 3	5.00	447.86	.920	1.300	104.0	86.0	2.5	64.0	53.0	.188	2926.9
N 4	5.00	450.95	.990	1.400	106.0	86.0	2.5	65.0	53.0	.188	3039.1
N 5	5.00	453.86	.960	1.370	102.0	86.0	2.5	64.0	53.0	.188	2989.9
N 6	5.00	456.72	.850	1.220	105.0	87.0	2.5	64.0	53.0	.188	2813.4

TABLE A-5

PARTICULATE DATA AND CALCULATED VALUES

RUN- 5-BVW DATE- 10-30-75

ATMOS TEMP (DG.F)	ATMOS PRES (I.HG)	STACK VAC (I.H2O)	H2O COND (ML)	PARTIC WT-PTL (MG)	PARTIC WT-TTL (MG)	STACK AREA (FT2)	INIT VOL (DCF)	PERC O2 DRY	PERC CO2 DRY	PERC CO DRY	PITOT TUBE COEF
55.0	28.17	-2.60	9.2	1460.80	1460.80	.09	140.10	20.9	0.0	0.0	.838

PORT-POINT		SAMP TIME (MIN)	METER VOL (DCF)	DELTA P (I.H2O)	DELTA H (I.H2O)	TEMP IN (D.F)	TEMP OUT (D.F)	TRAIN VAC (I.HG)	STACK TEMP (D.F)	S.GEL TEMP (D.F)	PROBE T DIA (IN)	VEL (FPM)
E	1	5.00	144.22	1.600	2.300	54.0	52.0	5.0	52.0	50.0	.188	4307.6
E	1	2.50	146.29	1.600	2.300	61.0	52.0	5.0	52.0	50.0	.188	4307.6
E	2	2.50	148.35	1.600	2.300	66.0	53.0	5.0	52.0	50.0	.188	4307.6
E	2	5.00	152.57	1.600	2.300	70.0	53.0	5.0	52.0	50.0	.188	4307.6
E	3	5.00	156.42	1.500	2.100	78.0	56.0	5.0	52.0	50.0	.188	4170.8
E	3	2.50	158.40	1.500	2.100	82.0	58.0	5.0	52.0	50.0	.188	4170.8
E	4	2.50	160.50	1.500	2.100	86.0	60.0	5.0	52.0	50.0	.188	4170.8
E	4	5.00	164.82	1.500	2.100	87.0	61.0	5.0	52.0	50.0	.188	4170.8
N	1	5.00	169.30	1.700	2.400	82.0	64.0	5.0	60.0	50.0	.188	4474.7
N	1	2.50	171.46	1.700	2.400	88.0	66.0	5.0	60.0	50.0	.188	4474.7
N	2	2.50	173.59	1.600	2.300	92.0	67.0	5.0	60.0	50.0	.188	4341.1
N	2	5.00	177.93	1.600	2.300	94.0	68.0	5.0	60.0	50.0	.188	4341.1
N	3	5.00	182.30	1.600	2.300	98.0	70.0	5.0	60.0	50.0	.188	4341.1
N	3	2.50	184.48	1.600	2.300	100.0	72.0	5.0	60.0	50.0	.188	4341.1
N	4	2.50	186.65	1.600	2.300	102.0	74.0	5.0	60.0	50.0	.188	4341.1
N	4	5.00	191.03	1.600	2.300	102.0	74.0	5.0	60.0	50.0	.188	4341.1

TABLE A-6

PARTICULATE DATA AND CALCULATED VALUES

RUN- 6-LOW DATE- 10-31-75

ATMOS TEMP (DG.F)	ATMOS PRES (I.HG)	STACK VAC (I.H2O)	H2O COND (ML)	PARTIC WT-PTL (MG)	PARTIC WT-TTL (MG)	STACK AREA (FT2)	INIT VOL (DCF)	PERC O2 DRY	PERC CO2 DRY	PERC CO DRY	PITOT TUBE COEF
61.0	27.74	-3.90	8.3	1639.90	1639.90	3.08	456.73	20.9	0.0	0.0	.746

PORT-POINT	SAMP TIME (MIN)	METER VOL (DCF)	DELTA P (I.H2O)	DELTA H (I.H2O)	TEMP IN (D.F)	TEMP OUT (D.F)	TRAIN VAC (I.HG)	STACK TEMP (D.F)	S.GEL TEMP (D.F)	PROBE T DIA (IN)	VEL (FPM)
N 1	5.00	459.99	.610	.880	60.0	60.0	2.0	62.0	51.0	.188	2406.8
N 2	5.00	461.42	.710	1.010	62.0	60.0	2.0	63.0	51.0	.188	2599.1
N 3	5.00	464.00	.900	1.270	66.0	62.0	2.0	63.0	51.0	.188	2926.3
N 4	5.00	466.83	1.000	1.410	73.0	63.0	2.0	63.0	51.0	.188	3084.6
N 5	5.00	469.64	.930	1.300	80.0	65.0	2.0	63.0	51.0	.188	2974.6
N 6	5.00	472.51	.830	1.200	84.0	68.0	2.0	63.0	51.0	.188	2810.2
E 1	5.00	474.78	.580	.840	78.0	70.0	2.0	63.0	51.0	.188	2349.1
E 2	5.00	477.26	.720	1.030	85.0	72.0	2.0	63.0	51.0	.188	2617.3
E 3	5.00	480.09	.870	1.250	88.0	73.0	2.0	63.0	51.0	.188	2877.1
E 4	5.00	483.09	1.100	1.570	91.0	75.0	2.0	63.0	51.0	.188	3235.1
E 5	5.00	486.25	.950	1.360	95.0	76.0	2.0	63.0	51.0	.188	3006.5
E 6	5.00	488.98	.790	1.120	96.0	78.0	2.0	63.0	51.0	.188	2741.6

TABLE A-7

PARTICULATE DATA AND CALCULATED VALUES

RUN- 7-BVW DATE- 10-31-75

ATMOS TEMP (DG.F)	ATMOS PRES (I.HG)	STACK VAC (I.H2O)	H2O COND (ML)	PARTIC WT-PTL (MG)	PARTIC WT-TTL (MG)	STACK AREA (FT2)	INIT VOL (DCF)	PERC O2 DRY	PERC CO2 DRY	PERC CO DRY	PITOT TUBE COEF
61.0	27.74	-2.60	[illegible].7	893.10	893.10	.09	191.03	20.9	0.0	0.0	.838

PORT-POINT	SAMP TIME (MIN)	METER VOL (DCF)	DELTA P (I.H2O)	DELTA H (I.H2O)	TEMP IN (D.F)	TEMP OUT (D.F)	TRAIN VAC (I.HG)	STACK TEMP (D.F)	S.GEL TEMP (D.F)	PROBE T DIA (IN)	VEL (FPM)
N 1	5.00	192.82	1.500	.360	61.0	60.0	1.0	67.0	50.0	.125	4267.2
N 1	2.50	193.82	1.500	.360	64.0	60.0	2.0	67.0	50.0	.125	4267.2
N 2	2.50	194.56	1.500	.400	65.0	61.0	2.0	67.0	50.0	.125	4267.2
N 2	5.00	196.38	1.500	.400	67.0	61.0	2.0	67.0	50.0	.125	4267.2
N 3	5.00	198.30	1.600	.440	72.0	62.0	2.0	67.0	50.0	.125	4407.1
N 3	2.50	199.18	1.600	.440	76.0	64.0	2.0	67.0	50.0	.125	4407.1
N 4	2.50	200.18	1.700	.460	78.0	65.0	2.0	67.0	50.0	.125	4542.8
N 4	5.00	202.09	1.700	.460	81.0	67.0	2.0	67.0	50.0	.125	4542.8
W 1	5.00	204.16	1.500	.460	77.0	69.0	1.0	67.0	50.0	.125	4267.2
W 1	2.50	204.88	1.500	.400	81.0	70.0	1.0	67.0	50.0	.125	4267.2
W 2	2.50	205.80	1.500	.400	81.0	71.0	1.0	67.0	50.0	.125	4267.2
W 2	5.00	207.57	1.500	.400	82.0	72.0	1.0	67.0	50.0	.125	4267.2
W 3	5.00	20[illegible].45	1.500	.400	86.0	74.0	2.0	67.0	50.0	.125	4267.2
W 3	2.50	210.34	1.500	.400	87.0	74.0	2.0	67.0	50.0	.125	4267.2
W 4	2.50	211.29	1.500	.400	88.0	75.0	2.0	67.0	50.0	.125	4267.2
W 4	5.00	213.11	1.500	.400	89.0	75.0	2.0	67.0	50.0	.125	4267.2

TABLE A-8

PARTICULATE DATA AND CALCULATED VALUES

RUN- 8-TBC DATE- 10-31-75

ATMOS TEMP (DG.F)	ATMOS PRES (I.HG)	STACK VAC (I.H2O)	H2O COND (ML)	PARTIC WT-PTL (MG)	PARTIC WT-TTL (MG)	STACK AREA (FT2)	INIT VOL (DCF)	PERC O2 DRY	PERC CO2 DRY	PERC CO DRY	PITOT TUBE COEF
65.0	27.71	-3.90	9.0	2998.90	2998.90	3.08	488.98	20.9	0.0	0.0	.746

PORT-POINT	SAMP TIME (MIN)	METER VOL (DCF)	DELTA P (I.H2O)	DELTA H (I.H2O)	TEMP IN (D.F)	TEMP OUT (D.F)	TRAIN VAC (I.HG)	STACK TEMP (D.F)	S.GEL TEMP (D.F)	PROBE T DIA (IN)	VEL (FPM)
E 1	5.00	490.93	.440	.640	68.0	68.0	2.0	65.0	52.0	.188	2051.8
E 2	5.00	493.18	.640	.810	70.0	69.0	2.0	65.0	52.0	.188	2474.6
E 3	5.00	495.84	.760	1.100	72.0	70.0	2.0	65.0	52.0	.188	2696.6
E 4	5.00	498.41	.790	1.130	78.0	71.0	2.0	65.0	52.0	.188	2749.3
E 5	5.00	501.16	.800	1.150	84.0	72.0	2.0	65.0	52.0	.188	2766.7
E 6	5.00	503.72	.740	1.070	89.0	74.0	2.0	65.0	52.0	.188	2660.9
N 1	5.00	506.18	.660	.940	88.0	76.0	2.0	65.0	52.0	.188	2512.9
N 2	5.00	508.35	.550	.790	92.0	78.0	2.0	65.0	52.0	.188	2294.0
N 3	5.00	510.87	.660	.940	94.0	79.0	2.0	65.0	52.0	.188	2512.9
N 4	5.00	513.87	.980	1.380	96.0	80.0	2.0	65.0	52.0	.188	3062.1
N 5	5.00	516.85	1.000	1.410	100.0	83.0	2.0	65.0	52.0	.188	3093.2
N 6	5.00	519.84	.950	1.360	102.0	84.0	2.0	65.0	52.0	.188	3014.9

TABLE A-9

PARTICULATE DATA AND CALCULATED VALUES

RUN- 9-TBC DATE- 10-31-75

ATMOS TEMP (DG.F)	ATMOS PRES (I.HG)	STACK VAC (I.H2O)	H2O COND (ML)	PARTIC WT-PTL (MG)	PARTIC WT-TTL (MG)	STACK AREA (FT2)	INIT VOL (DCF)	PERC O2 DRY	PERC CO2 DRY	PERC CO DRY	PITOT TUBE COEF
65.0	27.71	-3.90	7.5	3069.30	3069.30	3.08	519.84	20.9	0.0	0.0	.746

PORT-POINT	SAMP TIME (MIN)	METER VOL (DCF)	DELTA P (I.H2O)	DELTA H (I.H2O)	TEMP IN (D.F)	TEMP OUT (D.F)	TRAIN VAC (I.HG)	STACK TEMP (D.F)	S.GEL TEMP (D.F)	PROBE T DIA (IN)	VEL (FPM)
N 1	5.00	522.63	.850	1.200	86.0	83.0	1.0	65.0	52.0	.188	2850.2
N 2	5.00	524.84	.540	.780	91.0	84.0	1.0	65.0	52.0	.188	2271.7
N 3	5.00	527.26	.620	.880	94.0	84.0	1.0	66.0	52.0	.188	2436.5
N 4	5.00	530.24	1.000	1.400	96.0	84.0	1.0	66.0	52.0	.188	3094.4
N 5	5.00	533.45	1.100	1.550	100.0	85.0	1.0	66.0	52.0	.188	3245.4
N 6	5.00	536.52	.970	1.300	104.0	86.0	1.0	66.0	52.0	.188	3047.6
E 1	5.00	538.92	.600	.860	98.0	86.0	1.0	66.0	52.0	.188	2396.9
E 2	5.00	541.58	.750	1.050	101.0	87.0	1.0	66.0	52.0	.188	2679.8
E 3	5.00	544.42	.860	1.200	104.0	88.0	1.0	68.0	52.0	.188	2875.1
E 4	5.00	547.47	.960	1.400	107.0	88.0	1.0	68.0	52.0	.188	3037.6
E 5	5.00	550.43	.920	1.300	110.0	90.0	1.0	68.0	52.0	.188	2973.7
E 6	5.00	553.00	.710	1.000	111.0	90.0	1.0	68.0	52.0	.188	2612.3

TABLE A-10

PARTICULATE DATA AND CALCULATED VALUES

RUN- 10-TBM DATE- 10-31-75

ATMOS TEMP (DG.F)	ATMOS PRES (I.HG)	STACK VAC (I.H2O)	H2O COND (ML)	PARTIC WT-PTL (MG)	PARTIC WT-TTL (MG)	STACK AREA (FT2)	INIT VOL (DCF)	PERC O2 DRY	PERC CO2 DRY	PERC CO DRY	PITOT TUBE COEF
69.0	27.65	-3.90	7.4	1959.70	1959.70	3.08	553.00	20.9	0.0	0.0	.746

PORT-POINT	SAMP TIME (MIN)	METER VOL (DCF)	DELTA P (I.H2O)	DELTA H (I.H2O)	TEMP IN (D.F)	TEMP OUT (D.F)	TRAIN VAC (I.HG)	STACK TEMP (D.F)	S.GEL TEMP (D.F)	PROBE T DIA (IN)	VEL (FPM)
E 1	5.00	555.29	.570	.820	88.0	86.0	2.0	68.0	52.0	.188	2343.2
E 2	5.00	557.73	.670	.950	89.0	86.0	2.0	68.0	52.0	.188	2540.4
E 3	5.00	560.71	.880	1.250	96.0	86.0	2.0	68.0	52.0	.188	2911.5
E 4	5.00	563.68	.980	1.380	102.0	87.0	2.0	68.0	52.0	.188	3072.4
E 5	5.00	566.48	.810	1.170	104.0	88.0	2.0	68.0	52.0	.188	2793.3
E 6	5.00	569.18	.800	1.150	105.0	90.0	2.0	68.0	52.0	.188	2776.0
N 1	5.00	571.45	.540	.780	100.0	88.0	2.0	68.0	52.0	.188	2280.7
N 2	5.00	573.92	.640	.910	100.0	88.0	2.0	68.0	52.0	.188	2482.9
N 3	5.00	576.52	.760	1.090	100.0	88.0	2.0	68.0	52.0	.188	2705.7
N 4	5.00	579.60	1.000	1.420	100.0	88.0	2.0	68.0	52.0	.188	3103.6
N 5	5.00	582.61	1.000	1.420	102.0	89.0	2.0	68.0	52.0	.188	3103.6
N 6	5.00	585.59	.850	1.230	105.0	89.0	2.0	68.0	52.0	.188	2861.4

TABLE A-11

PARTICULATE DATA AND CALCULATED VALUES

RUN- 11-BVM DATE- 10-31-75

ATMOS TEMP (DG.F)	ATMOS PRES (I.HG)	STACK VAC (I.H2O)	H2O COND (ML)	PARTIC WT-PTL (MG)	PARTIC WT-TTL (MG)	STACK AREA (FT2)	INIT VOL (DCF)	PERC O2 DRY	PERC CO2 DRY	PERC CO DRY	PITOT TUBE COEF
70.0	27.65	-1.60	4.4	811.60	811.60	.19	213.11	20.9	0.0	0.0	.838

PORT-POINT	SAMP TIME (MIN)	METER VOL (DCF)	DELTA P (I.H2O)	DELTA H (I.H2O)	TEMP IN (D.F)	TEMP OUT (D.F)	TRAIN VAC (I.HG)	STACK TEMP (D.F)	S.GEL TEMP (D.F)	PROBE T DIA (IN)	VEL (FPM)
E 1	5.00	215.00	1.300	.360	72.0	70.0	1.0	65.0	52.0	.125	3975.8
E 1	2.50	215.72	1.300	.350	74.0	70.0	1.0	65.0	52.0	.125	3975.8
E 2	2.50	216.59	1.500	.410	75.0	70.0	1.0	65.0	52.0	.125	4270.7
E 2	5.00	218.35	1.500	.410	80.0	72.0	1.0	65.0	52.0	.125	4270.7
E 3	5.00	220.01	1.200	.320	82.0	72.0	1.0	65.0	52.0	.125	3819.9
E 3	2.50	220.78	1.200	.320	84.0	74.0	1.0	65.0	52.0	.125	3819.9
E 4	2.50	221.55	.880	.240	86.0	75.0	1.0	65.0	52.0	.125	3271.1
E 4	5.00	223.01	.880	.240	86.0	75.0	1.0	65.0	52.0	.125	3271.1
N 1	5.00	224.35	.650	.180	84.0	78.0	1.0	65.0	52.0	.125	2811.3
N 1	2.50	224.90	.650	.180	86.0	79.0	1.0	65.0	52.0	.125	2811.3
N 2	2.50	225.47	.900	.240	86.0	80.0	1.0	65.0	52.0	.125	3308.1
N 2	5.00	226.87	.900	.240	88.0	80.0	1.0	65.0	52.0	.125	3308.1
N 3	5.00	228.57	1.300	.360	92.0	82.0	1.0	65.0	52.0	.125	3975.8
N 3	2.50	229.42	1.300	.360	94.0	82.0	1.0	65.0	52.0	.125	3975.8
N 4	2.50	230.27	1.200	.320	95.0	84.0	1.0	65.0	52.0	.125	3819.9
N 4	5.00	232.07	1.200	.320	96.0	84.0	1.0	65.0	52.0	.125	3819.9

TABLE A-12

PARTICULATE DATA AND CALCULATED VALUES

RUN- 12-TBD DATE- 10-31-75

ATMOS TEMP (DG.F)	ATMOS PRES (I.HG)	STACK VAC (I.H2O)	H2O COND (ML)	PARTIC WT-PTL (MG)	PARTIC WT-TTL (MG)	STACK AREA (FT2)	INIT VOL (DCF)	PERC O2 DRY	PERC CO2 DRY	PERC CO DRY	PITOT TUBE COEF
73.0	27.65	-3.90	10.3	2289.60	2289.60	3.08	585.59	20.9	0.0	0.0	.7[illegible]6

PORT-POINT	SAMP TIME (MIN)	METER VOL (DCF)	DELTA P (I.H2O)	DELTA H (I.H2O)	TEMP IN (D.F)	TEMP OUT (D.F)	TRAIN VAC (I.HG)	STACK TEMP (D.F)	S.GEL TEMP (D.F)	PROBE T DIA (IN)	VEL (FPM)
N 1	5.00	587.66	.460	.670	88.0	86.0	2.0	68.0	54.0	.188	2107.0
N 2	5.00	589.97	.590	.850	88.0	86.0	2.0	68.0	54.0	.188	2386.2
N 3	5.00	592.55	.720	1.030	94.0	86.0	2.0	68.0	54.0	.188	2636.0
N 4	5.00	595.61	1.000	1.420	98.0	86.0	2.0	68.0	54.0	.188	3106.5
N 5	5.00	598.62	.990	1.400	102.0	87.0	2.0	68.0	54.0	.188	3091.0
N 6	5.00	601.47	.860	1.250	103.0	87.0	2.0	68.0	54.0	.188	2880.9
E 1	5.00	603.87	.590	.850	101.0	88.0	2.0	68.0	54.0	.188	2386.2
E 2	5.00	606.30	.650	.940	102.0	89.0	2.0	68.0	54.0	.188	2504.6
E 3	5.00	609.02	.790	1.130	103.0	90.0	2.0	68.0	54.0	.188	2761.1
E 4	5.00	612.23	1.000	1.420	104.0	90.0	2.0	68.0	54.0	.188	3106.5
E 5	5.00	614.80	.770	1.100	105.0	90.0	2.0	68.0	54.0	.188	2726.0
E 6	5.00	617.55	.800	1.150	106.0	91.0	2.0	68.0	54.0	.188	2778.6

TABLE A-13

PARTICULATE EMISSION DATA

NAME	DESCRIPTION	UNITS	1-LOS	2-LOS	3-LOW
	DATE OF RUN		10-29-75	10-29-75	10-29-75
DN	PROBE TIP DIAMETER	IN	.188	.188	.188
TT	NET TIME OF RUN	MIN	60.0	60.0	60.0
PB	BAROMETRIC PRESSURE	IN.HG	28.44	28.48	28.4
PM	AVG ORIFICE PRES DROP	IN.H2O	1.215	1.177	1.298
VM	VOL DRY GAS-METER COND	DCF	32.59	32.58	33.99
TM	AVG GAS METER TEMP	DEG.F	64.2	76.7	77.8
VMSTD	VOL DRY GAS-STD COND	DSCF	31.42	30.72	31.91
VW	TOTAL H2O COLLECTED	ML	4.0	3.9	5.4
VWV	VOL H2O VAPOR-STD COND	SCF	.19	.18	.26
PMOS	PERCENT MOISTURE BY VOL		.6	.6	.8
MD	MOLE FRACTION DRY GAS		.994	.994	.992
PCO2	PERCENT CO2 BY VOL, DRY		0.0	0.0	0.0
PO2	PERCENT O2 BY VOL, DRY		20.9	20.9	20.9
PCO	PERCENT CO BY VOL, DRY		0.0	0.0	0.0
PN2	PERCENT N2 BY VOL, DRY		79.1	79.1	79.1
MWD	MOLECULAR WT-DRY STK GAS		28.84	28.84	28.84
MW	MOLECULAR WT-STK GAS		28.77	28.77	28.75
CP	PITOT TUBE COEFFICIENT		.746	.746	.746
DPS	AVG STK VELOCITY HEAD	IN.H2O	.852	.823	.918
TS	AVG STACK TEMPERATURE	DEG.F	45.9	57.3	61.1
NP	NET SAMPLING POINTS		12	12	12
PST	STATIC PRES OF STACK	IN.HG	.29	.29	.29
PS	STACK PRESSURE, ABSOLUTE	IN.HG	28.73	28.77	28.79
VS	AVG STACK GAS VELOCITY	FPM	2750	2706	2886
AS	STACK AREA	IN2	444	444	444
QAM	ACTUAL STACK FLOWRATE	M3/MIN	239.8	236.0	251.6
QS	STK FLOWRATE, DRY,STD CN	DSCFM	8467	8271	8597
QA	ACTUAL STACK FLOWRATE	ACFM	8469	8333	8887
PERI	PERCENT ISOKINETIC		98.5	98.6	98.5
MF	PARTICULATE WT-PARTIAL	MG	9570.00	5757.10	2153.60
MT	PARTICULATE WT-TOTAL	MG	9570.00	5757.10	2153.60
IC	PERC IMPINGER CATCH		0.00	0.00	0.00
CAN	PART. LOAD-PTL.STD CN	GR/DSCF	4.69079	2.88629	1.03950
CAO	PART. LOAD-TTL.STD CN	GR/DSCF	4.69079	2.88629	1.03950
CAT	PART. LOAD-PTL.STK CN	GR/ACF	4.68981	2.86474	1.00564
CAU	PART. LOAD-TTL.STK CN	GR/ACF	4.68981	2.86474	1.00564
CAW	PARTIC EMIS-PARTIAL	LB/HR	340.37	204.59	76.59
CAX	PARTIC EMIS-TOTAL	LB/HR	340.37	204.59	76.59

TABLE A-13 (Continued)

PARTICULATE EMISSION DATA

NAME	DESCRIPTION	UNITS	4-TBW	5-BVW	6-LOW
	DATE OF RUN		10-29-75	10-30-75	10-31-75
DN	PROBE TIP DIAMETER	IN	.188	.188	.188
TT	NET TIME OF RUN	MIN	60.0	60.0	60.0
PB	BAROMETRIC PRESSURE	IN.HG	28.35	28.17	27.74
PM	AVG ORIFICE PRES DROP	IN.H2O	1.338	2.262	1.187
VM	VOL DRY GAS-METER COND	DCF	35.32	5[illegible].93	32.25
TM	AVG GAS METER TEMP	DEG.F	91.[illegible]	73.	74.2
VMSTD	VOL DRY GAS-STD COND	DSCF	32.27	47.96	29.76
VW	TOTAL H2O COLLECTED	ML	5.5	9.[illegible]	[illegible].3
VWV	VOL H2O VAPOR-STD COND	SCF	.[illegible]	.44	.3[illegible]
PMOS	PERCENT MOISTURE BY VOL		.[illegible]	.9	[illegible]
MD	MOLE FRACTION DRY GAS		.992	.99[illegible]	.987
PCO2	PERCENT CO2 BY VOL, DRY		0.0	0.0	0.0
PO2	PERCENT O2 BY VOL, DRY		20.9	20.9	20.9
PCO	PERCENT CO BY VOL, DRY		0.0	0.0	0.0
PN2	PERCENT N2 BY VOL, DRY		79.1	79.1	79.1
MWD	MOLECULAR WT-DRY STK GAS		28.84	28.84	28.84
MW	MOLECULAR WT-STK GAS		28.75	28.74	28.69
CP	PITOT TUBE COEFFICIENT		.746	.8[illegible]8	.746
DPS	AVG STK VELOCITY HEAD	IN.H2O	.940	1.587	.832
TS	AVG STACK TEMPERATURE	DEG.F	6[illegible].0	56.0	6[illegible].9
NP	NET SAMPLING POINTS		12	1[illegible]	12
PST	STATIC PRES OF STACK	IN.HG	.29	.19	.29
PS	STACK PRESSURE, ABSOLUTE	IN.HG	28.64	28.36	28.[illegible]3
VS	AVG STACK GAS VELOCITY	FPM	2949	4308	2803
AS	STACK AREA	IN2	444	[illegible]3	444
QAM	ACTUAL STACK FLOWRATE	M3/MIN	257.2	11.[illegible]	244.5
QS	STK FLOWRATE, DRY,STD CN	DSCFM	8722	374	8[illegible]89
QA	ACTUAL STACK FLOWRATE	ACFM	9[illegible]82	388	8[illegible]33
PERI	PERCENT ISOKINETIC		98.2	99.[illegible]	97.7
MF	PARTICULATE WT-PARTIAL	MG	1230.40	1460.80	1639.90
MT	PARTICULATE WT-TOTAL	MG	1230.40	1460.80	1639.90
IC	PERC IMPINGER CATCH		0.00	0.00	0.00
CAN	PART. LOAD-PTL.STD CN	GR/DSCF	.58724	.46905	.84860
CAO	PART. LOAD-TTL,STD CN	GR/DSCF	.58724	.46905	.84860
CAT	PART. LOAD-PTL,STK CN	GR/ACF	.56394	.45257	.795[illegible]5
CAU	PART. LOAD-TTL,STK CN	GR/ACF	.56394	.45257	.795[illegible]5
CAW	PARTIC EMIS-PARTIAL	LB/HR	43.89	1.5[illegible]	58.8[illegible]
CAX	PARTIC EMIS-TOTAL	LB/HR	43.89	1.5[illegible]	58.8[illegible]

TABLE A-13 (Continued)

PARTICULATE EMISSION DATA

NAME	DESCRIPTION	UNITS	7-BVW	8-TBC	9-TBC
	DATE OF RUN		10-31-75	10-31-75	10-31-75
DN	PROBE TIP DIAMETER	IN	.125	.188	.188
TT	NET TIME OF RUN	MIN	60.0	60.0	60.0
PB	BAROMETRIC PRESSURE	IN.HG	27.74	27.71	27.71
PM	AVG ORIFICE PRES DROP	IN.H2O	.412	1.060	1.160
VM	VOL DRY GAS-METER COND	DCF	22.08	30.86	33.[illegible]
TM	AVG GAS METER TEMP	DEG.F	72.3	8[illegible].7	93.[illegible]
VMSTD	VOL DRY GAS-STD COND	DSCF	20.41	2[illegible].09	29.51
VW	TOTAL H2O COLLECTED	ML	5.7	9.	7.[illegible]
VWV	VOL H2O VAPOR-STD COND	SCF	.27	.43	.3[illegible]
PMOS	PERCENT MOISTURE BY VOL		1.3	1.5	1.2
MD	MOLE FRACTION DRY GAS		.987	.98[illegible]	.988
PCO2	PERCENT CO2 BY VOL, DRY		0.0	0.0	0.0
PO2	PERCENT O2 BY VOL, DRY		20.9	20.9	20.9
PCO	PERCENT CO BY VOL, DRY		0.0	0.0	0.0
PN2	PERCENT N2 BY VOL, DRY		79.1	79.1	79.1
MWD	MOLECULAR WT-DRY STK GAS		28.84	28.84	28.84
MW	MOLECULAR WT-STK GAS		28.69	28.67	28.7[illegible]
CP	PITOT TUBE COEFFICIENT		.8[illegible]8	.746	.746
DPS	AVG STK VELOCITY HEAD	IN.H2O	1.537	.747	.823
TS	AVG STACK TEMPERATURE	DEG.F	67.0	65.0	66.5
NP	NET SAMPLING POINTS		15	12	12
PST	STATIC PRES OF STACK	IN.HG	.19	.29	.29
PS	STACK PRESSURE, ABSOLUTE	IN.HG	27.93	28.00	28.00
VS	AVG STACK GAS VELOCITY	FPM	4320	2658	279[illegible]
AS	STACK AREA	IN2	13	444	444
QAM	ACTUAL STACK FLOWRATE	M3/MIN	11.[illegible]	231.8	243.[illegible]
QS	STK FLOWRATE, DRY,STD CN	DSCFM	360	7618	8009
QA	ACTUAL STACK FLOWRATE	ACFM	389	8187	86[illegible]
PERI	PERCENT ISOKINETIC		99.4	97.9	97.8
MF	PARTICULATE WT-PARTIAL	MG	893.10	2998.90	30[illegible]9.30
MT	PARTICULATE WT-TOTAL	MG	893.10	2998.90	30[illegible]9.30
IC	PERC IMPINGER CATCH		0.00	0.00	0.00
CAN	PART. LOAD-PTL.STD CN	GR/DSCF	.67403	1.64391	1.60158
CAO	PART. LOAD-TTL.STD CN	GR/DSCF	.67403	1.64391	1.60158
CAT	PART. LOAD-PTL,STK CN	GR/ACF	.62453	1.52967	1.49[illegible]64
CAU	PART. LOAD-TTL,STK CN	GR/ACF	.62453	1.52967	1.49[illegible]64
CAW	PARTIC EMIS-PARTIAL	LB/HR	2.08	107.32	109.93
CAX	PARTIC EMIS-TOTAL	LB/HR	2.08	107.32	109.93

TABLE A-13 (Concluded)

PARTICULATE EMISSION DATA

NAME	DESCRIPTION	UNITS	10-TBM	11-BVM	12-TBM
	DATE OF RUN		10-31-75	10-31-75	10-31-75
DN	PROBE TIP DIAMETER	IN	.188	.125	.188
TT	NET TIME OF RUN	MIN	60.0	60.0	60.0
PB	BAROMETRIC PRESSURE	IN.HG	27.65	27.65	27.65
PM	AVG ORIFICE PRES DROP	IN.H2O	1.131	.303	1.101
VM	VOL DRY GAS-METER COND	DCF	32.59	18.96	31.96
TM	AVG GAS METER TEMP	DEG.F	93.5	8[illegible].8	93.8
VMSTD	VOL DRY GAS-STD COND	DSCF	28.93	17.18	28.35
VW	TOTAL H2O COLLECTED	ML	7.4	4.4	1[illegible].
VWV	VOL H2O VAPOR-STD COND	SCF	.35	.2[illegible]	.4[illegible]
PMOS	PERCENT MOISTURE BY VOL		1.2	1.2	1.7
MD	MOLE FRACTION DRY GAS		.988	.988	.98[illegible]
PCO2	PERCENT CO2 BY VOL, DRY		0.0	0.0	0.0
PO2	PERCENT O2 BY VOL, DRY		20.9	20.9	20.9
PCO	PERCENT CO BY VOL, DRY		0.0	0.0	0.0
PN2	PERCENT N2 BY VOL, DRY		79.1	79.1	79.1
MWD	MOLECULAR WT-DRY STK GAS		28.84	28.84	28.84
MW	MOLECULAR WT-STK GAS		28.71	28.71	28.65
CP	PITOT TUBE COEFFICIENT		.746	.838	.746
DPS	AVG STK VELOCITY HEAD	IN.H2O	.792	1.116	.768
TS	AVG STACK TEMPERATURE	DEG.F	68.0	65.0	68.0
NP	NET SAMPLING POINTS		12	16	12
PST	STATIC PRES OF STACK	IN.HG	.29	.12	.29
PS	STACK PRESSURE, ABSOLUTE	IN.HG	27.94	27.77	27.94
VS	AVG STACK GAS VELOCITY	FPM	2749	3658	27[illegible]7
AS	STACK AREA	IN2	444	27	444
QAM	ACTUAL STACK FLOWRATE	M3/MIN	239.7	19.7	236.[illegible]
QS	STK FLOWRATE, DRY,STD CN	DSCFM	7839	643	768[illegible]
QA	ACTUAL STACK FLOWRATE	ACFM	8465	695	8336
PERI	PERCENT ISOKINETIC		98.0	99.0	98.0
MF	PARTICULATE WT-PARTIAL	MG	1959.70	811.60	2289.60
MT	PARTICULATE WT-TOTAL	MG	1959.70	811.60	2289.60
IC	PERC IMPINGER CATCH		0.00	0.00	0.00
CAN	PART. LOAD-PTL,STD CN	GR/DSCF	1.04335	.72732	1.24368
CAO	PART. LOAD-TTL.STD CN	GR/DSCF	1.04335	.72732	1.24368
CAT	PART. LOAD-PTL,STK CN	GR/ACF	.96617	.67326	1.14591
CAU	PART. LOAD-TTL.STK CN	GR/ACF	.96617	.67326	1.14591
CAW	PARTIC EMIS-PARTIAL	LB/HR	70.09	4.01	81.86
CAX	PARTIC EMIS-TOTAL	LB/HR	70.09	4.01	81.86

TABLE A-14

PARTICULATE EMISSION DATA
(METRIC RESULTS)

NAME	DESCRIPTION	UNITS	1-LOS	2-LOS	3-LOS
	DATE OF RUN		10-29-75	10-29-75	10-29-75
DN	PROBE TIP DIAMETER	IN	.188	.188	.188
TT	NET TIME OF RUN	MIN	60.0	60.0	60.0
PB	BAROMETRIC PRESSURE	IN.HG	28.44	28.48	28.4
PM	AVG ORIFICE PRES DROP	IN.H2O	1.215	1.177	1.298
VM	VOL DRY GAS-METER COND	DCF	32.59	32.58	33.99
TM	AVG GAS METER TEMP	DEG.F	64.2	76.7	77.8
VMSTM	VOL DRY GAS-STD COND	NCM	.89	.87	.9[illegible]
VW	TOTAL H2O COLLECTED	ML	4.0	3.9	5.4
VWM	VOL H2O VAPOR-STD COND	NM3	.01	.01	.01
PMOS	PERCENT MOISTURE BY VOL		.6	.6	.9
MD	MOLE FRACTION DRY GAS		.994	.994	.99[illegible]
PCO2	PERCENT CO2 BY VOL, DRY		0.0	0.0	0.0
PO2	PERCENT O2 BY VOL, DRY		20.9	20.9	20.9
PCO	PERCENT CO BY VOL, DRY		0.0	0.0	0.0
PN2	PERCENT N2 BY VOL, DRY		79.1	79.1	79.1
MWD	MOLECULAR WT-DRY STK GAS		28.84	28.84	28.84
MW	MOLECULAR WT-STK GAS		28.77	28.77	28.75
CP	PITOT TUBE COEFFICIENT		.746	.746	.746
DPS	AVG STK VELOCITY HEAD	IN.H2O	.852	.823	.9[illegible]8
TSM	AVG STACK TEMPERATURE	DEG.C	7.7	1[illegible].2	1[illegible].2
NP	NET SAMPLING POINTS		12	12	12
PST	STATIC PRES OF STACK	IN.HG	.29	.29	.29
PS	STACK PRESSURE, ABSOLUTE	IN.HG	28.73	28.77	28.69
VSM	AVG STACK GAS VELOCITY	M/MIN	838.2	824.7	879.5
AS	STACK AREA	IN2	444	444	444
QAM	ACTUAL STACK FLOWRATE	M3/MIN	239.8	236.[illegible]	251.6
QSM	STK FLOWRATE, DRY,STD CN	NM3/MIN	239.8	234.2	243.4
PERI	PERCENT ISOKINETIC		98.5	98.6	98.5
MF	PARTICULATE WT-PARTIAL	MG	9570.00	5757.10	2153.60
MT	PARTICULATE WT-TOTAL	MG	9570.00	5757.10	2153.60
IC	PERC IMPINGER CATCH		0.00	0.00	0.00
CANM	PART. LOAD-PTL,STD CN	MG/NM3	10734.13	6604.80	2378.73
CAOM	PART. LOAD-TTL,STD CN	MG/NM3	10734.13	6604.80	2378.73
CATM	PART. LOAD-PTL,STK CN	MG/M3	10731.88	6555.49	2301.25
CAUM	PART. LOAD-TTL,STK CN	MG/M3	10731.88	6555.49	2301.25
CAWM	PARTIC EMIS-PARTIAL	KG/HR	154.391	92.798	34.739
CAXM	PARTIC EMIS-TOTAL	KG/HR	154.391	92.798	34.739

TABLE A-14 (Continued)

PARTICULATE EMISSION DATA
(METRIC RESULTS)

NAME	DESCRIPTION	UNITS	4-TBW	5-BVW	6-OW
	DATE OF RUN		10-29-75	10-30-75	10-31-75
DN	PROBE TIP DIAMETER	IN	.188	.188	.188
TT	NET TIME OF RUN	MIN	60.0	60.0	60.0
PB	BAROMETRIC PRESSURE	IN.HG	28.35	28.[illegible]7	27.74
PM	AVG ORIFICE PRES DROP	IN.H2O	1.338	2.262	1.187
VM	VOL DRY GAS-METER COND	DCF	35.32	50.93	32.25
TM	AVG GAS METER TEMP	DEG.F	91.6	73.0	74.2
VMSTM	VOL DRY GAS-STD COND	NCM	.91	1.36	.8
VW	TOTAL H2O COLLECTED	ML	5.5	9.[illegible]	[illegible].3
VWM	VOL H2O VAPOR-STD COND	NM3	.01	.01	.01
PMOS	PERCENT MOISTURE BY VOL		.8	.9	1.3
MD	MOLE FRACTION DRY GAS		.992	.991	.98[illegible]
PCO2	PERCENT CO2 BY VOL, DRY		0.0	0.0	0.0
PO2	PERCENT O2 BY VOL, DRY		20.9	20.9	20.9
PCO	PERCENT CO BY VOL, DRY		0.0	0.0	0.0
PN2	PERCENT N2 BY VOL, DRY		79.1	79.1	79.1
MWD	MOLECULAR WT-DRY STK GAS		28.84	28.84	28.84
MW	MOLECULAR WT-STK GAS		28.75	28.74	28.69
CP	PITOT TUBE COEFFICIENT		.746	.838	.746
DPS	AVG STK VELOCITY HEAD	IN.H2O	.940	1.587	.832
TSM	AVG STACK TEMPERATURE	DEG.C	17.8	13.3	17.2
NP	NET SAMPLING POINTS		12	16	12
PST	STATIC PRES OF STACK	IN.HG	.29	.19	.29
PS	STACK PRESSURE, ABSOLUTE	IN.HG	28.64	28.36	28.[illegible]3
VSM	AVG STACK GAS VELOCITY	M/MIN	898.9	1313.1	854.4
AS	STACK AREA	IN2	444	[illegible]3	444
QAM	ACTUAL STACK FLOWRATE	M3/MIN	257.2	11.[illegible]	244.5
QSM	STK FLOWRATE, DRY,STD CN	NM3/MIN	247.0	10.6	22[illegible].1
PERI	PERCENT ISOKINETIC		98.2	99.[illegible]	97.7
MF	PARTICULATE WT-PARTIAL	MG	1230.40	1460.80	1639.90
MT	PARTICULATE WT-TOTAL	MG	1230.40	1460.80	1639.90
IC	PERC IMPINGER CATCH		0.00	0.00	0.00
CANM	PART. LOAD-PTL.STD CN	MG/NM3	1343.81	1073.36	1941.87
CAOM	PART. LOAD-TTL.STD CN	MG/NM3	1343.81	1073.36	1941.87
CATM	PART. LOAD-PTL.STK CN	MG/M3	1290.48	1035.62	1819.58
CAUM	PART. LOAD-TTL.STK CN	MG/M3	1290.48	1035.62	1819.58
CAWM	PARTIC EMIS-PARTIAL	KG/HR	19.910	.682	26.684
CAXM	PARTIC EMIS-TOTAL	KG/HR	19.910	.682	26.684

TABLE A-14 (Continued)

PARTICULATE EMISSION DATA
(METRIC RESULTS)

NAME	DESCRIPTION	UNITS	7-BVW	8-TBC	9-TBC
	DATE OF RUN		10-31-75	10-31-75	10-31-75
DN	PROBE TIP DIAMETER	IN	.125	.188	.188
TT	NET TIME OF RUN	MIN	60.0	60.0	60.0
PB	BAROMETRIC PRESSURE	IN.HG	27.74	27.71	27.71
PM	AVG ORIFICE PRES DROP	IN.H2O	.412	1.060	1.160
VM	VOL DRY GAS-METER COND	DCF	22.08	30.86	33.16
TM	AVG GAS METER TEMP	DEG.F	72.3	80.7	93.[illegible]
VMSTM	VOL DRY GAS-STD COND	NCM	.58	.80	.84
VW	TOTAL H2O COLLECTED	ML	5.7	9.[illegible]	7.5
VWM	VOL H2O VAPOR-STD COND	NM3	.01	.01	.01
PMOS	PERCENT MOISTURE BY VOL		1.3	1.5	1.2
MD	MOLE FRACTION DRY GAS		.987	.985	.988
PCO2	PERCENT CO2 BY VOL, DRY		0.0	0.0	0.0
PO2	PERCENT O2 BY VOL, DRY		20.9	20.9	20.9
PCO	PERCENT CO BY VOL, DRY		0.0	0.0	0.0
PN2	PERCENT N2 BY VOL, DRY		79.1	79.1	79.1
MWD	MOLECULAR WT-DRY STK GAS		28.84	28.84	28.84
MW	MOLECULAR WT-STK GAS		28.69	28.67	28.7[illegible]
CP	PITOT TUBE COEFFICIENT		.838	.746	.746
DPS	AVG STK VELOCITY HEAD	IN.H2O	1.537	.747	.823
TSM	AVG STACK TEMPERATURE	DEG.C	19.4	19.3	19.2
NP	NET SAMPLING POINTS		16	12	12
PST	STATIC PRES OF STACK	IN.HG	.19	.29	.29
PS	STACK PRESSURE, ABSOLUTE	IN.HG	27.93	28.00	28.00
VSM	AVG STACK GAS VELOCITY	M/MIN	1316.9	810.2	851.7
AS	STACK AREA	IN2	13	444	444
QAM	ACTUAL STACK FLOWRATE	M3/MIN	11.0	231.8	243.7
QSM	STK FLOWRATE, DRY,STD CN	NM3/MIN	10.2	215.7	226.8
PERI	PERCENT ISOKINETIC		99.4	97.9	97.8
MF	PARTICULATE WT-PARTIAL	MG	893.10	2998.90	3069.30
MT	PARTICULATE WT-TOTAL	MG	893.10	2998.90	3069.30
IC	PERC IMPINGER CATCH		0.00	0.00	0.00
CANM	PART. LOAD-PTL.STD CN	MG/NM3	1542.40	3761.64	3664.96
CAOM	PART. LOAD-TTL.STD CN	MG/NM3	1542.40	3761.84	3664.96
CATM	PART. LOAD-PTL.STK CN	MG/M3	1429.15	3500.40	3411.09
CAUM	PART. LOAD-TTL.STK CN	MG/M3	1429.15	3500.40	3411.09
CAWM	PARTIC EMIS-PARTIAL	KG/HR	.944	48.679	49.864
CAXM	PARTIC EMIS-TOTAL	KG/HR	.944	48.679	49.864

TABLE A-14 (Concluded)

PARTICULATE EMISSION DATA
(METRIC RESULTS)

NAME	DESCRIPTION	UNITS	10-TBM	11-BVM	12-TBM
	DATE OF RUN		10-31-75	10-31-75	10-31-75
DN	PROBE TIP DIAMETER	IN	.188	.125	.188
TT	NET TIME OF RUN	MIN	60.0	60.0	60.0
PB	BAROMETRIC PRESSURE	IN.HG	27.65	27.65	27.65
PM	AVG ORIFICE PRES DROP	IN.H2O	1.131	.303	1.101
VM	VOL DRY GAS-METER COND	DCF	32.59	1[illegible].96	31.96
TM	AVG GAS METER TEMP	DEG.F	93.5	8[illegible].8	93.8
VMSTM	VOL DRY GAS-STD COND	NCM	.82	.49	.8[illegible]
VW	TOTAL H2O COLLECTED	ML	7.4	4.4	1[illegible].3
VWM	VOL H2O VAPOR-STD COND	NM3	.01	.01	.01
PMOS	PERCENT MOISTURE BY VOL		1.2	1.2	1.7
MD	MOLE FRACTION DRY GAS		.988	.988	.98[illegible]
PCO2	PERCENT CO2 BY VOL, DRY		0.0	0.0	0.0
PO2	PERCENT O2 BY VOL, DRY		20.9	20.9	20.9
PCO	PERCENT CO BY VOL, DRY		0.0	0.0	0.0
PN2	PERCENT N2 BY VOL, DRY		79.1	79.1	79.1
MWD	MOLECULAR WT-DRY STK GAS		28.84	28.84	28.84
MW	MOLECULAR WT-STK GAS		28.71	28.71	28.[illegible]5
CP	PITOT TUBE COEFFICIENT		.746	.838	.746
DPS	AVG STK VELOCITY HEAD	IN.H2O	.792	1.116	.768
TSM	AVG STACK TEMPERATURE	DEG.C	20.0	18.3	20.0
NP	NET SAMPLING POINTS		12	16	12
PST	STATIC PRES OF STACK	IN.HG	.29	.12	.29
PS	STACK PRESSURE, ABSOLUTE	IN.HG	27.94	27.77	27.94
VSM	AVG STACK GAS VELOCITY	M/MIN	837.8	1114.9	825.[illegible]
AS	STACK AREA	IN2	444	27	444
QAM	ACTUAL STACK FLOWRATE	M3/MIN	239.7	19.7	23[illegible]
QSM	STK FLOWRATE, DRY,STD CN	NM3/MIN	222.0	18.2	217.[illegible]
PERI	PERCENT ISOKINETIC		98.0	99.0	98.0
MF	PARTICULATE WT-PARTIAL	MG	1959.70	811.60	2289.60
MT	PARTICULATE WT-TOTAL	MG	1959.70	811.60	2289.60
IC	PERC IMPINGER CATCH		0.00	0.00	0.00
CANM	PART. LOAD-PTL,STD CN	MG/NM3	2387.54	1664.37	2845.96
CAOM	PART. LOAD-TTL,STD CN	MG/NM3	2387.54	1664.37	2845.96
CATM	PART. LOAD-PTL,STK CN	MG/M3	2210.92	1540.65	2622.23
CAUM	PART. LOAD-TTL,STK CN	MG/M3	2210.92	1540.65	2622.23
CAWM	PARTIC EMIS-PARTIAL	KG/HR	31.793	1.819	37.131
CAXM	PARTIC EMIS-TOTAL	KG/HR	31.793	1.819	37.131

TABLE A-15

SUMMARY OF RESULTS

NAME	DESCRIPTION	UNITS	1-LOS	2-LOS	3-LOW
	DATE OF RUN		10-29-75	10-29-75	10-29-75
VMSTD	VOL DRY GAS-STD COND	DSCF	31.42	30.72	31.91
PMOS	PERCENT MOISTURE BY VOL		.6	.6	.8
TS	AVG STACK TEMPERATURE	DEG.F	45.9	50.3	61.1
QS	STK FLOWRATE, DRY,STD CN	DSCFM	8467	8271	8597
QA	ACTUAL STACK FLOWRATE	ACFM	8469	8333	8887
PERI	PERCENT ISOKINETIC		98.5	98.6	98.5
PARTICULATES -- PARTIAL CATCH					
MF	PARTICULATE WT-PARTIAL	MG	9570.00	5757.10	2153.60
CAN	PART. LOAD-PTL,STD CN	GR/DSCF	4.69079	2.88629	1.03950
CAT	PART. LOAD-PTL,STK CN	GR/ACF	4.68981	2.86474	1.00564
CAW	PARTIC EMIS-PARTIAL	LB/HR	340.37	204.59	76.59
PARTICULATES -- TOTAL CATCH					
MT	PARTICULATE WT-TOTAL	MG	9570.00	5757.10	2153.60
CAO	PART. LOAD-TTL,STD CN	GR/DSCF	4.69079	2.88629	1.03950
CAU	PART. LOAD-TTL,STK CN	GR/ACF	4.68981	2.86474	1.00564
CAX	PARTIC EMIS-TOTAL	LB/HR	340.37	204.59	76.59
IC	PERC IMPINGER CATCH		0.00	0.00	0.00

TABLE A-15 (Continued)

SUMMARY OF RESULTS

NAME	DESCRIPTION	UNITS	4-TBW	5-BVW	6-BOW
	DATE OF RUN		10-29-75	10-30-75	10-31-75
VMSTD	VOL DRY GAS-STD COND	DSCF	32.27	47.96	29.76
PMOS	PERCENT MOISTURE BY VOL		.5	.9	1.3
TS	AVG STACK TEMPERATURE	DEG.F	64.0	56.0	62.9
QS	STK FLOWRATE, DRY,STD CN	DSCFM	8722	374	8189
QA	ACTUAL STACK FLOWRATE	ACFM	9182	388	8633
PERI	PERCENT ISOKINETIC		98.2	99.5	97.7
PARTICULATES -- PARTIAL CATCH					
MF	PARTICULATE WT-PARTIAL	MG	1230.40	1460.80	1639.90
CAN	PART. LOAD-PTL,STD CN	GR/DSCF	.58724	.46905	.84860
CAT	PART. LOAD-PTL,STK CN	GR/ACF	.56394	.45257	.79515
CAW	PARTIC EMIS-PARTIAL	LB/HR	43.89	1.50	58.83
PARTICULATES -- TOTAL CATCH					
MT	PARTICULATE WT-TOTAL	MG	1230.40	1460.80	1639.90
CAO	PART. LOAD-TTL,STD CN	GR/DSCF	.58724	.46905	.84860
CAU	PART. LOAD-TTL,STK CN	GR/ACF	.56394	.45257	.79515
CAX	PARTIC EMIS-TOTAL	LB/HR	43.89	1.50	58.83
IC	PERC IMPINGER CATCH		0.00	0.00	0.00

TABLE A-15 (Continued)

SUMMARY OF RESULTS

NAME	DESCRIPTION	UNITS	7-BVW	8-TBC	9-TBC
	DATE OF RUN		10-31-75	10-31-75	10-31-75
VMSTD	VOL DRY GAS-STD COND	DSCF	20.41	28.09	29.51
PMOS	PERCENT MOISTURE BY VOL		1.3	1.5	1.2
TS	AVG STACK TEMPERATURE	DEG.F	67.0	65.0	66.5
QS	STK FLOWRATE, DRY,STD CN	DSCFM	360	7618	8009
QA	ACTUAL STACK FLOWRATE	ACFM	389	8187	86[illegible]
PERI	PERCENT ISOKINETIC		99.4	97.9	97.8
PARTICULATES -- PARTIAL CATCH					
MF	PARTICULATE WT-PARTIAL	MG	893.10	2998.90	3069.30
CAN	PART. LOAD-PTL,STD CN	GR/DSCF	.67403	1.64391	1.60158
CAT	PART. LOAD-PTL,STK CN	GR/ACF	.62453	1.52967	1.49064
CAW	PARTIC EMIS-PARTIAL	LB/HR	2.08	107.32	109.93
PARTICULATES -- TOTAL CATCH					
MT	PARTICULATE WT-TOTAL	MG	893.10	2998.90	3069.30
CAO	PART. LOAD-TTL,STD CN	GR/DSCF	.67403	1.64391	1.60158
CAU	PART. LOAD-TTL,STK CN	GR/ACF	.62453	1.52967	1.49064
CAX	PARTIC EMIS-TOTAL	LB/HR	2.08	107.32	109.93
IC	PERC IMPINGER CATCH		0.00	0.00	0.00

TABLE A-15 (Concluded)

SUMMARY OF RESULTS

NAME	DESCRIPTION	UNITS	10-TBM	11-BVM	12-TBM
	DATE OF RUN		10-31-75	10-31-75	10-31-75
VMSTD	VOL DRY GAS-STD COND	DSCF	28.93	17.18	28.35
PMOS	PERCENT MOISTURE BY VOL		1.2	1.2	1.7
TS	AVG STACK TEMPERATURE	DEG.F	68.0	65.0	68.0
QS	STK FLOWRATE, DRY,STD CN	DSCFM	7839	643	768
QA	ACTUAL STACK FLOWRATE	ACFM	8465	695	8336
PERI	PERCENT ISOKINETIC		98.0	99.0	98.0
PARTICULATES -- PARTIAL CATCH					
MF	PARTICULATE WT-PARTIAL	MG	1959.70	811.60	2289.60
CAN	PART. LOAD-PTL,STD CN	GR/DSCF	1.04335	.72732	1.24368
CAT	PART. LOAD-PTL,STK CN	GR/ACF	.96617	.67326	1.14591
CAW	PARTIC EMIS-PARTIAL	LB/HR	70.09	4.01	81.86
PARTICULATES -- TOTAL CATCH					
MT	PARTICULATE WT-TOTAL	MG	1959.70	811.60	2289.60
CAO	PART. LOAD-TTL,STD CN	GR/DSCF	1.04335	.72732	1.24368
CAU	PART. LOAD-TTL,STK CN	GR/ACF	.96617	.67326	1.14591
CAX	PARTIC EMIS-TOTAL	LB/HR	70.09	4.01	81.86
IC	PERC IMPINGER CATCH		0.00	0.00	0.00

TABLE A-16

SUMMARY OF RESULTS--METRIC UNITS

NAME	DESCRIPTION	UNITS	1-LOS	2-LOS	3-LOW
	DATE OF RUN		10-29-75	10-29-75	10-29-75
VMSTM	VOL DRY GAS-STD COND	NCM	.890	.870	.903
PMOS	PERCENT MOISTURE BY VOL		.6	.6	.8
TSM	AVG STACK TEMPERATURE	DEG.C	7.7	10.2	16.2
QSM	STK FLOWRATE, DRY,STD CN	NM3/MIN	239.8	234.2	243.4
QAM	ACTUAL STACK FLOWRATE	M3/MIN	239.8	236.0	251.6
PERI	PERCENT ISOKINETIC		98.5	98.6	98.5
PARTICULATES -- PARTIAL CATCH					
MF	PARTICULATE WT-PARTIAL	MG	9570.00	5757.10	2153.60
CANM	PART. LOAD-PTL,STD CN	MG/NM3	10734.13	6604.80	2378.73
CATM	PART. LOAD-PTL,STK CN	MG/M3	10731.88	6555.49	2301.25
CAWM	PARTIC EMIS-PARTIAL	KG/HR	154.391	92.798	34.739
PARTICULATES -- TOTAL CATCH					
MT	PARTICULATE WT-TOTAL	MG	9570.00	5757.10	2153.60
CAOM	PART. LOAD-TTL,STD CN	MG/NM3	10734.13	6604.80	2378.73
CAUM	PART. LOAD-TTL,STK CN	MG/M3	10731.88	6555.49	2301.25
CAXM	PARTIC EMIS-TOTAL	KG/HR	154.391	92.798	34.739
IC	PERC IMPINGER CATCH		0.00	0.00	0.00

TABLE A-16 (Continued)

SUMMARY OF RESULTS--METRIC UNITS

NAME	DESCRIPTION	UNITS	4-TBW	5-BVW	6-LOW
	DATE OF RUN		10-29-75	10-30-75	10-31-75
VMSTM	VOL DRY GAS-STD COND	NCM	.914	1.358	.843
PMOS	PERCENT MOISTURE BY VOL		.8	.9	1.3
TSM	AVG STACK TEMPERATURE	DEG.C	17.8	13.3	17.2
QSM	STK FLOWRATE, DRY,STD CN	NM3/MIN	247.0	10.6	229.1
QAM	ACTUAL STACK FLOWRATE	M3/MIN	257.2	11.0	244.5
PERI	PERCENT ISOKINETIC		98.2	99.5	97.7
PARTICULATES -- PARTIAL CATCH					
MF	PARTICULATE WT-PARTIAL	MG	1230.40	1460.80	1639.90
CANM	PART. LOAD-PTL,STD CN	MG/NM3	1343.81	1073.36	1941.87
CATM	PART. LOAD-PTL,STK CN	MG/M3	1290.48	1035.62	1819.58
CAWM	PARTIC EMIS-PARTIAL	KG/HR	19.910	.682	26.684
PARTICULATES -- TOTAL CATCH					
MT	PARTICULATE WT-TOTAL	MG	1230.40	1460.80	1639.90
CAOM	PART. LOAD-TTL,STD CN	MG/NM3	1343.81	1073.36	1941.87
CAUM	PART. LOAD-TTL,STK CN	MG/M3	1290.48	1035.62	1819.58
CAXM	PARTIC EMIS-TOTAL	KG/HR	19.910	.682	26.684
IC	PERC IMPINGER CATCH		0.00	0.00	0.00

TABLE A-16 (Continued)

SUMMARY OF RESULTS--METRIC UNITS

NAME	DESCRIPTION	UNITS	7-BVW	8-TBC	9-TBC
	DATE OF RUN		10-31-75	10-31-75	10-31-75
VMSTM	VOL DRY GAS-STD COND	NCM	.578	.796	.8[illegible]6
PMOS	PERCENT MOISTURE BY VOL		1.3	1.5	1.2
TSM	AVG STACK TEMPERATURE	DEG.C	19.4	18.3	19.2
QSM	STK FLOWRATE, DRY,STD CN	NM3/MIN	10.2	215.7	226.8
QAM	ACTUAL STACK FLOWRATE	M3/MIN	11.0	231.8	243.7
PERI	PERCENT ISOKINETIC		99.4	97.9	97.8
PARTICULATES -- PARTIAL CATCH					
MF	PARTICULATE WT-PARTIAL	MG	893.10	2998.90	3069.30
CANM	PART. LOAD-PTL,STD CN	MG/NM3	1542.40	3761.84	3664.96
CATM	PART. LOAD-PTL,STK CN	MG/M3	1429.15	3500.40	3411.09
CAWM	PARTIC EMIS-PARTIAL	KG/HR	.944	48.679	49.864
PARTICULATES -- TOTAL CATCH					
MT	PARTICULATE WT-TOTAL	MG	893.10	2998.90	3069.30
CAOM	PART. LOAD-TTL,STD CN	MG/NM3	1542.40	3761.84	3664.96
CAUM	PART. LOAD-TTL,STK CN	MG/M3	1429.15	3500.40	3411.09
CAXM	PARTIC EMIS-TOTAL	KG/HR	.944	48.679	49.864
IC	PERC IMPINGER CATCH		0.00	0.00	0.00

TABLE A-16 (Concluded)

SUMMARY OF RESULTS--METRIC UNITS

NAME	DESCRIPTION	UNITS	1[illegible]-TBM	11-BVM	12-TBM
	DATE OF RUN		10-31-75	10-31-75	10-31-75
VMSTM	VOL DRY GAS-STD COND	NCM	.819	.487	.8[illegible]3
PMOS	PERCENT MOISTURE BY VOL		1.2	1.2	1.7
TSM	AVG STACK TEMPERATURE	DEG.C	20.0	1[illegible].3	20.0
QSM	STK FLOWRATE, DRY,STD CN	NM3/MIN	222.[illegible]	18.2	217.[illegible]
QAM	ACTUAL STACK FLOWRATE	M3/MIN	239.7	19.7	236.[illegible]
PERI	PERCENT ISOKINETIC		98.0	99.0	98.0
PARTICULATES -- PARTIAL CATCH					
MF	PARTICULATE WT-PARTIAL	MG	1959.70	811.60	2289.60
CANM	PART. LOAD-PTL,STD CN	MG/NM3	2387.54	1664.37	2845.96
CATM	PART. LOAD-PTL,STK CN	MG/M3	2210.92	1540.65	2622.23
CAWM	PARTIC EMIS-PARTIAL	KG/HR	31.793	1.819	37.131
PARTICULATES -- TOTAL CATCH					
MT	PARTICULATE WT-TOTAL	MG	1959.70	811.60	2289.60
CAOM	PART. LOAD-TTL,STD CN	MG/NM3	2387.54	1664.37	2845.96
CAUM	PART. LOAD-TTL,STK CN	MG/M3	2210.92	1540.65	2622.23
CAXM	PARTIC EMIS-TOTAL	KG/HR	31.793	1.819	37.131
IC	PERC IMPINGER CATCH		0.00	0.00	0.00

APPENDIX B

SAMPLE CALCULATIONS

EXAMPLE PARTICULATE CALCULATIONS

1. VOLUME OF DRY GAS SAMPLED AT STANDARD CONDITIONS (1)

$$VMSTD = \frac{17.71*VM*(PM + PM/13.6)}{TM+460.}$$

$$= \frac{17.71*\ 32.59*(28.44+\ 1.215/13.6)}{64.2+460.} = \quad 31.42 \text{ DSCF}$$

$$VMSTM = VMSTD*0.028317 = \quad 31.42*0.028317 = \quad .89 \text{ DNM3}$$

2. VOLUME OF WATER VAPOR AT STANDARD CONDITIONS

$$VWV = 0.0474*VW = 0.0474* \quad 4.0 = \quad .19 \text{ SCF}$$

$$VWM = VWV*0.028317 = \quad .190*0.028317 = \quad .0054 \text{ NM3}$$

3. PERCENT MOISTURE IN STACK GAS

$$PMOS = \frac{100.*VWV}{VMSTD+VWV} = \frac{100.* \quad .19}{31.42+ \quad .19} = \quad .6 \text{ PERCENT}$$

4. MOLE FRACTION OF DRY STACK GAS

$$MD = \frac{100.-PMOS}{100.} = \frac{100.- \quad .6}{100.} = \quad .994$$

5. AVERAGE MOLECULAR WEIGHT OF DRY STACK GAS

$$MWD = (PCO2 * 44/100) + (PO2 * 32/100) + (PN2+PCO * 28/100)$$

$$= (\ 0.0 * 44/100) + (20.9 * 32/100) + (79.1 * 28/100)$$

$$= \quad 28.84$$

6. MOLECULAR WEIGHT OF STACK GAS

MW = MWD*MD + 18*(1-MD)

= 28.8* .994 + 18*(1- .994) = 28.77

7. STACK GAS VELOCITY AT STACK CONDITIONS

VS = 5129*CP*ASQRT(DPS*(TS+460))*
SQRT(1/(PS*MW))

= 5129* .746 * 2[illegible].663
SQRT(1/(28.73 28.77)) = 275[illegible] FPM

VSM = VS*0.3048 = 2750*0.3048 = 838 METERS/MIN

8. STACK GAS VOLUMETRIC FLOW AT STANDARD CONDITIONS, DRY BASIS (1)

$$QS = \frac{0.123*VS*AS*MD*PS}{TS+460}$$

$$= \frac{0.123* \ 2750* \ 444* \ .994*28.73}{45.9 +460}$$

= 8467 DSCFM

QSM = QS*0.028317 = 8467*0.028317 = 240 NM3/MIN

9. STACK GAS VOLUMETRIC FLOW AT STACK CONDITIONS

$$QA = \frac{QS * (TS+460)}{17.71 * PS * MD}$$

$$= \frac{8467*(\ 45.9+460)}{17.71*28.73* \ .994}$$

= 8469 ACFM

QAM = QA*0.028317 = 8469*0.028317 = 240 NM3/MIN

10. PERCENT ISOKINETIC

$$PERI = \frac{1032*(TS+460)*VMSTD}{VS*TT*PS*ND*(DN*DN)}$$

$$= \frac{1032*(\ 45.9+460)*\ \ 31.42}{2750*\ \ 60.0*28.73*\ .994*\ .188 * .188} = \quad 98.5 \text{ PERCENT}$$

11. PARTICULATE LOADING -- PROBE, CYCLONE, AND FILTER
(AT STANDARD CONDITIONS)

CAN = 0.0154 * (MF/VMSTD)

= 0.0154*(9570.00/ 31.42) = 4.69079 GR/DSCF

CANM = CAN*2288.34 = 4.69079*2288.34 = 10734.13 MG/NM3

12. PARTICULATE LOADING -- TOTAL
(AT STANDARD CONDITIONS) (1)

CAO = 0.0154 * (MT/VMSTD)

= 0.0154*(9570.00/ 31.42) = 4.69079 GR/DSCF

CAOM = CAO*2288.34 = 4.69079*2288.34 = 10734.13 MG/NM3

13. PARTICULATE LOADING -- PROBE, CYCLONE, AND FILTER
(AT STACK CONDITIONS)

$$CAT = \frac{17.71*CAN*PS*ND}{TS+460}$$

$$= \frac{17.71*\ 4.6908*28.73*\ .994}{45.9+460} = 4.68981 \text{ GR/ACF}$$

CATM = CAT*2288.34 = 4.68981*2288.34 = 10731.88 MG/M3

14. PARTICULATE LOADING -- TOTAL
(AT STACK CONDITIONS)

$$CAU = \frac{17.71*CAO*PS*MD}{TS+460}$$

$$= \frac{17.71*\ 4.6908*28.73*\ .994}{45.9+460} = 4.68981 \text{ GR/ACF}$$

CAUM = CAU*2288.34 = 4.68981*2288.34 = 10731.88 MG/M3

15. PARTICULATE EMISSION RATE
-- PROBE, CYCLONE, AND FILTER

CAW = 0.00857*CAN*QS

= 0.00857* 4.6908* 8467 = 340.37 LB/HR

CAWM = CAW*0.45359 = 340.37*0.45359 = 154.39 KG/HR

16. PARTICULATE EMISSION RATE
-- TOTAL

CAX = 0.00857*CAO*QS

= 0.00857* 4.6908* 8467 = 340.37 LB/HR

CAXM = CAX*0.45359 = 340.37*0.45359 = 154.39 KG/HR

17. EMISSION FACTOR--TOTAL

$$E = \frac{\text{Particulate Emission Rate}}{\text{Tons Grain Handled}}$$

$$= \frac{76.6}{100} = 0.766 \ \frac{\text{lb}}{\text{ton}}$$

EM = (E) x (0.5)

$$= (0.766) \times (0.5) = 0.383 \ \frac{\text{kg}}{\text{Mton}}$$

18. KILOGRAMS GRAIN

KG = (lb grain) x (0.4535924)

= (100,000) x (0.4535924)

= 45,360 kg

---

(1) STANDARD CONDITIONS- AT 70 DEG F (21.1 DEG C), 29.92 IN HG (760 MM HG)