Note: This is a reference cited in *AP 42, Compilation of Air Pollutant Emission Factors, Volume I Stationary Point and Area Sources.* AP42 is located on the EPA web site at www.epa.gov/ttn/chief/ap42/

The file name refers to the reference number, the AP42 chapter and section. The file name "ref02_c01s02.pdf" would mean the reference is from AP42 chapter 1 section 2. The reference may be from a previous version of the section and no longer cited. The primary source should always be checked.

Background Report Reference

AP-42 Section Number: 9.9.1

Background Report Section: 4

Reference Number: 15

Title: Air Pollution Emission Test at Adolph Coors Company

York Research Corporation

July 1977

REPORT NO. 77-SPP-17 1.1

AP-42 Section 9.9.1
Reference
Report Sect. 4
Reference 15

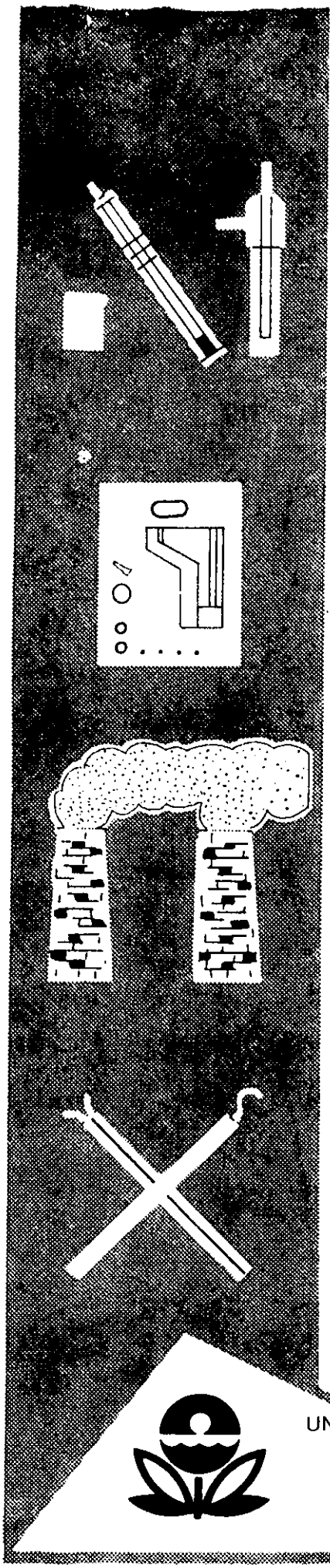

AIR POLLUTION EMISSION TEST

ADOLPH COORS BREWERY

GOLDEN, COLORADO

UNITED STATES ENVIRONMENTAL PROTECTION AGENCY
Office of Air and Waste Management
Office of Air Quality Planning and Standards
Emission Measurement Branch
Research Triangle Park, North Carolina

UNITED STATES ENVIRONMENTAL PROTECTION AGENCY
Office of Air Quality Planning and Standards
Research Triangle Park, North Carolina 27711

SUBJECT: Source Test Report

DATE: October 11, 1977

FROM: J. E. McCarley, Chief, Field Testing Section, Emission Measurement Branch, ESED (MD-13)

TO: See Below

The enclosed final source test report is submitted for your information. Any questions regarding the test should be directed to the Project Officer (telephone: 8/629-5243). Additional copies of this report are available from the ERC Library, Research Triangle Park, North Carolina 27711.

Industry: Coal-Fired Steam Generators

Process:

Company: Adolph Coors Brewery

Location: Golden, Colorado

Project Report Number: 77-SPP_17

Project Officer: Dennis Holzschuh

Enclosure

Addressees:
John Nader (MD-46)
Arch MacQueen (MD-14) Rec'd 10/13/77
Director, Air & Hazardous Materials Division, Region VIII
(copy enclosed for State agency)
APTIC (MD-18)

EMISSION TESTS
AT
ADOLPH COORS COMPANY
NO. 4 COAL-FIRED STEAM GENERATOR

Project No. 77-SPP-17
Contract No. 68-02-1401
Task No. 33

Prepared for
U.S. Environmental Protection Agency
Emission Measurement Branch
Research Triangle Park,
North Carolina 27711

Prepared by
York Research Corporation
Western Regional Facility
7100 N. Broadway, Bldg 3A
Denver, Colorado 80221

YRC No. 7-8479-33

July 26, 1977

TABLE OF CONTENTS

	LIST OF TABLES AND FIGURES	i
	ABBREVIATIONS	ii
1.0	INTRODUCTION	1
2.0	SUMMARY OF RESULTS	2
3.0	DESCRIPTION OF PROCESS	2
4.0	PROCEDURES	6
	4.1 LOCATION OF SAMPLING PORTS	6
	4.2 SAMPLING PROCEDURES	6
	4.3 CALIBRATION	11
5.0	DISCUSSION OF RESULTS	12
	APPENDIX	
	A. CALCULATIONS	
	B. COMPUTER PRINTOUTS	
	C. CALCULATION TABLES	
	D. FIELD DATA	
	E. LAB RESULTS	
	F. CALIBRATION	

LIST OF TABLES AND FIGURES

Table	Description	Page
2-1	Summary of Emission Tests	3
2-2	Percent by Weight	4
5-1	Particulate Summary in English Units	13
5-2	Particulate Summary in Metric Units	14
5-3	Particulate Results Out-of-Stack Plus In-Stack	15
5-4	Elemental Analysis	16
5-5	Coal Analysis	17

Figure	Description	Page
3-1	Schematic of Process	5
4.1-1	Location of Sampling Ports	7
4.2.1-1	EPA Particulate Sampling Train	8

ABBREVIATIONS

acf	Actual Cubic Feet
acfm	Actual Cubic Feet per Minute
dcf	Dry Cubic Feet
dscf	Dry Standard Cubic Feet
dscfm	Dry Standard Cubic Feet per Minute
^{o}F	Degrees Farenheit
fps	Feet per Second
in. Hg	Inches of Mercury
in. H_2O	Inches of Water
lb	Pound
mBTU	Million British Thermal Unit
mg	Milligram
min	Minute
ml	Milliliter
ppm	Parts per Million
scf	Standard Cubic Feet
scfd	Standard Cubic Feet Dry

1.0 INTRODUCTION

York Research Corporation (YRC), at the request of the Emission Measurement Branch of the U. S. Environmental Protection Agency (EPA), conducted stack testing at the Adolph Coors Company, Golden, Colorado.

The purpose of the task was twofold. First, emission information was desired on a baghouse control system for a low sulfur coal boiler. Secondly, a comparison was desired between the proposed in-stack filter sampling, Method 17; and the out-of-stack filter train, Method 5, upon which emission regulations are currently based. The facility selected for this testing is a coal fired boiler equipped with a baghouse dust control system to remove the particulate from a corner fired coal burning boiler.

Field testing was performed June 6, 7, and 8, 1977. The project was coordinated through the following Coors personnel: Mr. Mike Wallace, Environmental Engineer; Mr. Bob Lang, Manager of Engineering; and Mr. Dennis Capps, Power Plant Manager.

Mr. Dennis Holzschuh, Emission Measurement Branch (EMB), coordinated and observed the field test program. Mr. Reid Iverson, Industrial Studies Branch (ISB), and Ms. Carol Specht (ISB) obtained boiler operating data during testing. Mr. Roger Johnson (YRC) directed the sampling activities. The following York personnel obtained the field data:

Mr. Paul Wade -- Test Engineer, Console Operator

Mr. Louis Clark -- Technical Assistant, Assistant to Console Operator

Mr. Jim Olsen -- Test Engineer, Opacity Observer

Mr. Bill Cesearo -- Technical Assistant, Coal Sampling

Samples were also obtained by Coors test personnel throughout the sampling program. The Coors testing did not interfere in any way with the purpose of this project. The Coors tests were for compliance purposes of the Adolph Coors Company.

2.0 SUMMARY OF RESULTS

Table 2-1 summarizes the results of the particulate tests and opacity observations. The "in-stack" refers to the in-stack filter as per EPA Method 17. The "total" refers to in-stack plus out-of-stack filter catch and probe wash. The out-of-stack weight gain fluctuated from 2.1 to 20.3 milligrams. The effect of this fluctuation on the resultant emission rate was an increase of an average of 0.004 lb/mBTU. This increase ranged from 0.0007 to 0.0071 lb/mBTU or 0.7 to 7.1 percent of the new source performance standard of 0.1 lb/mBTU.

The emission rates were calculated by "F" factor computations. The integrated Orsat train for test one developed a leak which invalidated the oxygen value for test one. The average oxygen content for tests two and three was used for this computation.

Opacity data was obtained by a certified opacity observer. No visible emissions were recorded as "N", and less than 5% opacity was recorded as zero. This data was averaged for six minute intervals (24 observations), and the resulting data sets were averaged and reported in Table 2-1. With the exception of occassional readings of 10%, all readings were zero (<5%) or N.

The particulate samples were analyzed by atomic absorption spectrophotometry. Table 2-2 summarizes the percent by weight of each of six elements and sulfates for the in-stack and out-of-stack samples. For the elements analyzed, the composition of the sample appears similar with the exception of magnesium, sodium, and sulfates. The sodium fraction of the out-of-stack sample is consistently larger, and the magnesium fraction of the in-stack sample is consistently larger. The percent sulfate content of the out-of-stack sample was consistently larger than the in-stack sample.

3.0 DESCRIPTION OF PROCESS

Process parameters were monitored by Mr. Reid Iverson and Ms. Carol Specht of the Industrial Studies Branch. This data is not included in this report. The process, in general, is a pulverized coal-fired boiler equipped with a fabric filter dust collector. Figure 3-1 schematically describes the process. Coal is loaded into dual hoppers for subsequent

TABLE 2-1

SUMMARY OF EMISSION TESTS

Test Number	1		2		3		Average	
Sample Description	In-Stack	Total	In-Stack	Total	In-Stack	Total	In-Stack	Total
Sample Weight (mg)	94.6	96.7	70.2	90.5	110.1	122.1	91.6	103.1
Particulate Concentration								
gr/scfd	0.01889	0.01931	0.01376	0.01774	0.02228	0.02871	0.01830	0.02192
mg/nm^3	43.22	44.18	31.49	40.60	50.96	65.70	41.89	50.16
Particulate Emission Rate								
lb/mBTU	0.0329	0.0336	0.0245	0.0316	0.0386	0.0428	0.0320	0.0360
$g/10^6$ Calories	0.0593	0.0606	0.0442	0.0569	0.0695	0.0771	0.05765	0.0649
Opacity (%)		.6		1.1		.2		

TABLE 2-2

PERCENT BY WEIGHT

Test Number	Sodium	Potassium	Magnesium	Iron	Titanium	Copper	Sulfate
1 In-Stack	0.61	0.37	5.0	5.2	0.2	0.04	1.01
1 Out-of-Stack	55.6	0.71	3.2	8.7	0.0	0.4	12.3
2 In-Stack	0.8	0.5	4.2	6.0	0.4	0.03	1.03
2 Out-of-Stack	5.2	0.3	1.1	2.5	0.2	0.07	3.10
3 In-Stack	0.7	0.4	3.4	7.3	0.3	0.03	1.18
3 Out-of-Stack	43.0	0.2	0.2	1.6	0.0	0.007	2.32

Figure 3-1

SCHEMATIC OF PROCESS

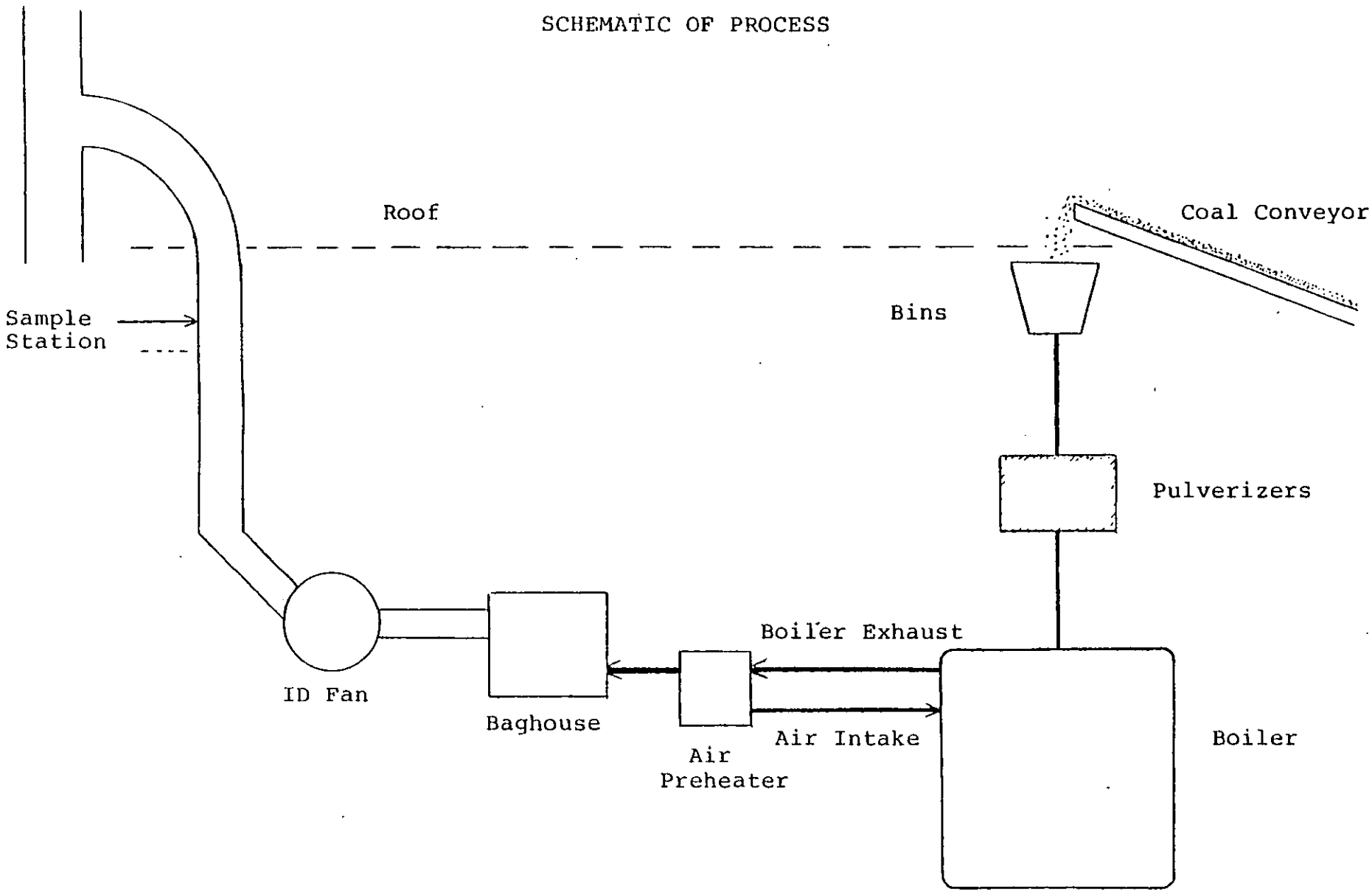

pulverization and transportation to the burners. The boiler is tangentially fired boiler with pulverized coal being fed into each of four burners. The rated capacity of the boiler is 250,000 pounds of steam per hour.

The tests were run during normal boiler operations. Soot blowing was incorporated into the testing cycle during test three.

4.0 PROCEDURES

The methodology for this sampling program was designed to meet the specifications in the task order.

4.1 Location of Sampling Ports

Particulate samples were extracted at the outlet of the fabric filter dust collector. The location of the sampling ports along with the disturbances upstream and downstream are described in Figure 4.1-1. The sampling location is 4.6 diameters downstream from a bend in the duct (dimension "A" in EPA Method 1), and 1.6 diameters upstream from a bend in the duct (dimension "B" in EPA Method 1).

4.2 Sampling Procedures

4.2.1 Particulate

The particulate emissions were measured according to proposed EPA Reference Method 17 modified to include an EPA Method 5 filter configuration as a backup filter. In this method, a preliminary velocity profile was conducted so that a sampling nozzle of an appropriate diameter could be selected. The sampling equipment was Research Appliance Company's STAKSAMPLR as described schematically in Figure 4.2.1-1.

The in-stack filter was a glass fiber filter followed by a stainless steel probe and backed up by a glass fiber filter in a heated sample box. The gas sample was drawn in through the nozzle, particulate was removed at the in-stack filter with the gas stream then passing through the heated sample probe to a heated filter box. The filter

Figure 4.1-1

LOCATION OF SAMPLING PORTS

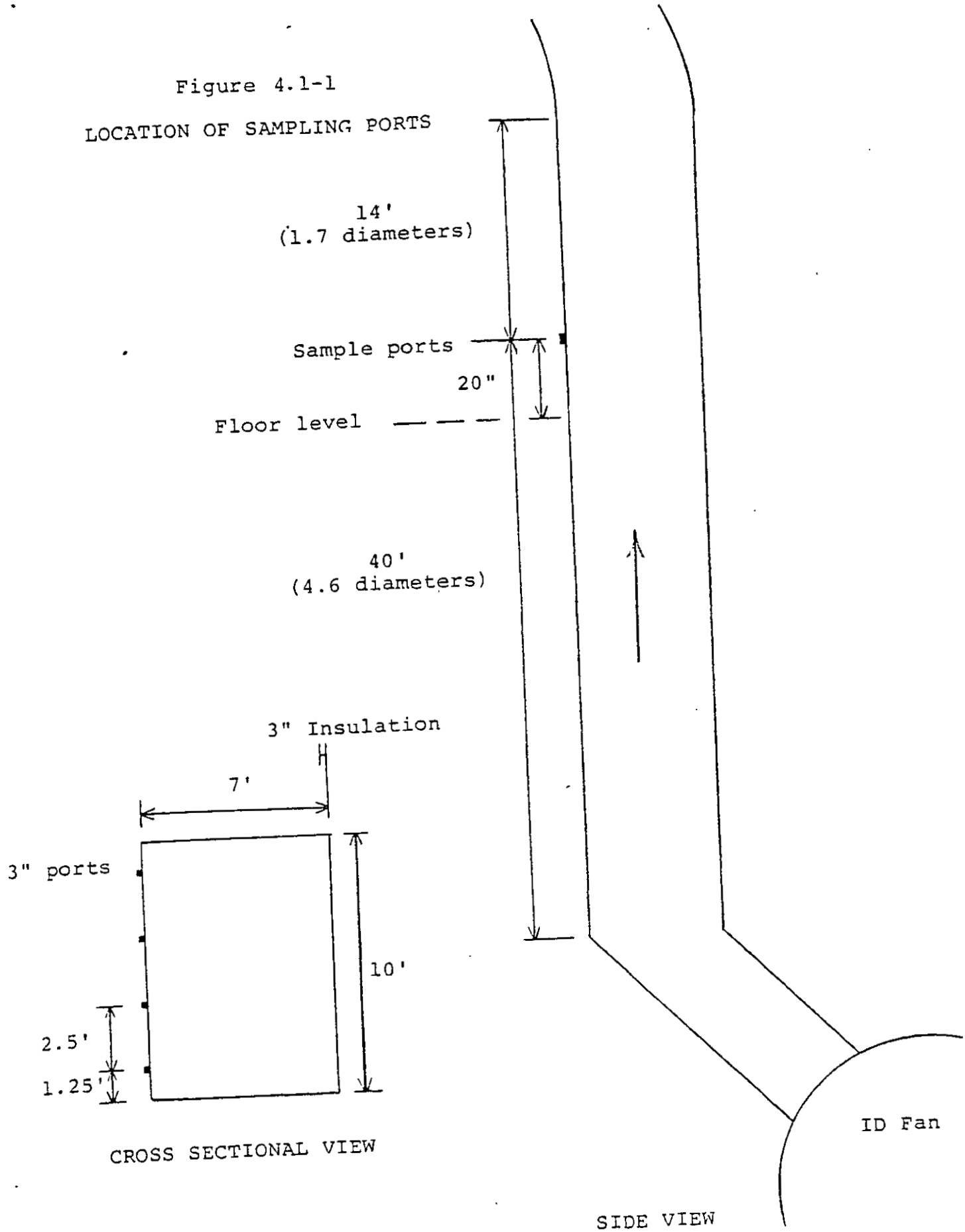

EPA PARTICULATE SAMPLING TRAIN
FIGURE 4.2.1-1

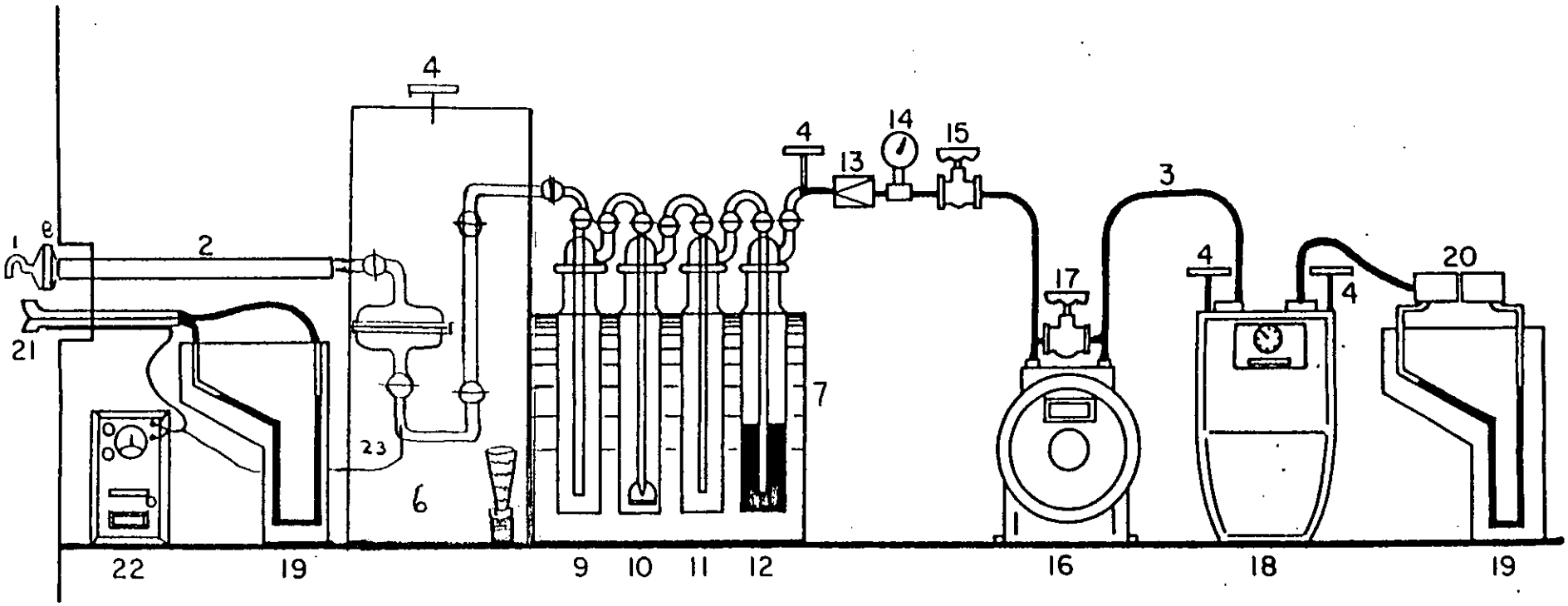

1. Sampling Nozzle
2. Sampling Probe
3. Umbilical
4. Thermometer
5. Filter Holder
6. Heater Box
7. Ice Bath
8. In-Stack Filter Holder
9. Untipped Impinger
10. Tipped Impinger
11. Unitpped Impinger
12. Untipped Impinger
13. Check Valve
14. Vacuum Gauge
15. Line Shut-off Valve
16. Vacuum Pump
17. Pump Adjustment
18. Dry Gas Meter
19. Inclined Manometer
20. Calibrated Orifice
21. Pitot Tube
22. Pyrometer
23. Thermocouple

out of the stack was maintained at a temperature of 320°F, ±20°F, to remove any remaining particulate matter from the gas sample. The gas then flowed through an ice-cooled impinger train and silica gel which quantitatively removed all water from the gas stream. The gas then flowed through a leakless pump, dry test meter, and calibrated orifice. The dry test meter integrated the total volume sampled while the orifice pressure differential was monitored and adjusted to maintain isokinetic sampling.

At the conclusion of the test, the sampling train was leak checked at the nozzle with a 15 inch mercury vacuum. The probe and filter assembly were carefully removed to the sample recovery area. The weight gain in the first three impingers was measured, and the contents of the impingers discarded. The silica gel was weighed on a triple beam balance with the weight gain recorded. The filter was removed from the in-stack filter holder, placed in a petri dish, sealed with plastic tape, and labeled. All loose particulate matter and acetone washings prior to the in-stack filter were collected and placed in a glass sample bottle with a Teflon liner in the cap. The out-of-stack filter was also removed from the holder, placed in a petri dish, sealed with plastic tape, and labeled. A probe brush and/or rubber policeman was used to remove particulates which adhered to the walls of the probe and glassware. The particulate matter which was collected after the in-stack filter was placed in a separate sample bottle, sealed with plastic tape, labeled, and placed with the other samples.

Samples were labeled with York three part labels as well as labels provided by the Emission Measurement Branch of the EPA. Coal samples were analyzed and forwarded to the Emission Measurement Branch. Particulate samples were analyzed gravimetrically, then analyzed by AA spectrophotometry. The AA procedure consumes the sample in the analysis.

4.2.2 Laboratory Analysis

In the laboratory the filter was transferred from the sample container, desiccated and dried to a constant weight. The acetone washings were transferred to a tared beaker, evaporated to dryness

desiccated and dried to a constant weight. An acetone blank, obtained from the wash containers during sample recovery in the field, was analyzed as the acetone wash samples.

After the gravimetric determination had been made, the particulate matter was digested with hydrochloric acid and analyzed by atomic absorption spectroscopy. The in-stack and out-of-stack particulate samples plus a blank in-stack and out-of-stack filter and an acetone blank were analyzed for sodium, potassium, magnesium, iron, titanium, and copper. Sulfates were determined colorimetrically.

4.2.3 Traversing

A preliminary traverse of the duct for velocity and temperature was conducted before particulate sampling began. Additional traverses of velocity and temperature were conducted during the particulate sampling as required by the EPA Reference Method 17. Samples were extracted from four ports with eight points per port for a total of 32 points. Sampling time was four minutes per point for a total sample time of 128 minutes. The Appendix contains the field data.

4.2.4 Molecular Weight Determination

Stack gas samples were withdrawn through a stainless steel tube attached to the particulate sampling probe, through a condensor, diaphragm pump, rotameter, and into a tedlar bag. An integrated sample over the entire test was collected by adjusting the rotameter to extract a proportional volume of gas at each point tested. At the conclusion of the test, three Orsat determinations were run on each bag to determine the carbon dioxide and oxygen content of the gas stream. The gas analysis data sheets are included in the Appendix.

4.2.5 Moisture

Moisture was measured during each of the particulate runs according to the EPA Reference Method 17. The preliminary moisture was estimated. The results of each particulate run was used for subsequent moisture estimates.

4.2.6 Opacity

Opacity was read according to EPA Reference Method 9. Mr. James Olsen read the opacity during each run. Observations began at least one half hour prior to the test and continued one half hour after each test. Mr. Olsen was recertified on April 5, 1977, by the Colorado Department of Health.

4.2.7 Coal Sampling

Pulverized coal samples were obtained ten minutes before the start of the test run and at half hour intervals until the test run was completed. The individual samples were combined to obtain a composite sample for thecoal burned during the test. A coal sampling device provided by Coors was used to collect the samples out of two ports on each of four pulverized coal streams. An ultimate analysis was conducted on the coal for moisture, ash, sulfur, carbon, hydrogen, oxygen, nitrogen, and the gross heat value for each test run. ASTM Method D3176-74 was used for the ultimate analysis of the coal.

4.3 Calibration

4.3.1 Pitot Tube

The "S"-type pitot tube used for the test was calibrated against a standard type pitot tube in a wind tunnel prior to the test. The calibration data is included in the Appendix.

4.3.2 Particulate Sampling Equipment

The orifice and dry test meter were calibrated prior to the field test with documentation available at the time of testing. The dry test meter and orifice calibration data are included in the Appendix.

4.3.3 Temperature Sensor

The thermocouple used for measuring the stack temperature was calibrated in boiling water and in the ambient air against a liquid thermometer. The calibration data are included in the Appendix.

5.0 DISCUSSION OF RESULTS

Tables 5-1 and 5-2 summarize the results of in-stack particulate tests in English and Metric units respectively. The "partial" refers to in-stack filter only. "Total" refers to in-stack filter plus acetone washes. Table 5-3 summarizes the out-of-stack plus in-stack results. Table 5-4 summarizes the mass in milligrams per sample of six elements and sulfates. Table 5-5 summarizes the ultimate analysis of the coal samples.

In general, testing went smoothly with the exception of a leak in the integrated Orsat sample train during test one. The cause of the leak was determined and repaired, and subsequent runs proceeded without difficulty. The average of test two and test three was used for computational purposes whenever Orsat data was needed.

The temperature of the out-of-stack filter was maintained at 320°F, ±20°F, for all tests. The temperature was monitored at a temperature well in a 90° elbow immediately following the filter holder.

Visually, the particulate samples appeared very similar. Analytically, the results point out a tenfold increase of weight on the out-of-stack filter from test one to test two. The out-of-stack filter catch for test three is equal to the average of the first two tests. There were no deviations from standard sampling and sample recovery procedures to account for this difference of in-stack vs. out-of-stack particulate concentrations. Soot blowing occurred during test three for the first hour of the test. Test three reflects an overall increase of particulate sample weight of about 25%. The emission rate for test three was still well below the new source performance standard for particulate material.

The Appendix to this report contains the computational formulas as well as the calculation forms for non-computerized calculations. Point isokinetics were computed and are included in the Appendix of this report.

TABLE 5-1

YORK RESEARCH CORPORATION JOB NUMBER: 7-8479-23
ONE RESEARCH DRIVE, STAMFORD, CONNECTICUT 06906

CLIENT: EPA
PLANT LOCATION: COBRS
UNIT TESTED: BOILER 4

PARTICULATE SUMMARY IN ENGLISH UNITS

DESCRIPTION	UNITS	1	2	3	AVERAGE
GENERAL DATA					
DATE OF RUN		JUN 7,77	JUN 8,77	JUN 8,77	
BAROMETRIC PRESSURE	IN.HG	24.55	24.91	24.91	
STACK PRESSURE, ABS.	IN.HG	24.60	24.96	24.96	
STACK AREA	SQ. FT	70.00	70.00	70.00	
NET TIME OF RUN	MIN	123.0	123.0	123.0	
PERCENT ISOKINETIC		100.1	100.7	101.3	100.7
GAS DATA					
AVG STACK GAS VELOCITY	FPS	43.007	43.060	41.303	42.523
AVG STACK TEMPERATURE	DEG.F	355.0	355.0	355.0	355.0
ACTUAL STACK FLOWRATE	ACFM	130629.	130850.	175574.	179013.
STK FLOWRATE, DRY, STD	DSCFM	35877.	36945.	33716.	35512.
MOLECULAR WT-DRY STK GAS		30.44	30.46	30.42	
MOLECULAR WT-STK GAS		29.06	29.04	28.91	
MOLE FRACTION DRY GAS		0.389	0.386	0.379	
GAS ANALYSIS (DRY PERCENT BASIS)					
CARBON DIOXIDE		14.1	14.2	14.0	14.1
OXYGEN		4.5	4.6	4.4	4.5
CARBON MONOXIDE		0.	0.	0.	0.
NITROGEN		81.4	81.2	81.6	81.4
MOISTURE BY VOL		11.1	11.4	12.1	11.5
SAMPLE COLLECTION DATA					
TOTAL H2O COLLECTED	ML	202.5	212.6	221.0	
VOL H2O VAPOR-STD COND	SCF	9.60	10.08	10.48	
VOL DRY GAS-METER COND	DCF	104.71	106.04	103.93	
VOL DRY GAS-STD COND	DSCF	77.14	78.57	76.14	
AVG GAS METER TEMP	DEG.F	133.5	133.7	145.5	
AVG ORIF PRES DROP	IN.H2O	1.363	1.863	1.768	
PARTICULATE WEIGHT DATA					
NET WEIGHT PARTIAL	MG	72.30	60.40	82.30	71.33
NET WEIGHT TOTAL	MG	94.60	73.20	110.10	91.63
PARTICULATE EMISSIONS					
PARTIAL					
GRAINS PER SCFD		0.01443	0.01134	0.01675	0.01434
GRAINS PER SCFD @12%CO2		0.01228	0.01000	0.01436	0.01221
GRAINS PER ACF		0.00636	0.00569	0.00799	0.00635
POUNDS PER HOUR		10.62	8.82	12.02	10.49
POUNDS PER MBTU		0.0251	0.0211	0.0277	0.0246
TOTAL					
GRAINS PER SCFD		0.01339	0.01376	0.02227	0.01330
GRAINS PER SCFD @12%CO2		0.01607	0.01163	0.01909	0.01560
GRAINS PER ACF		0.00593	0.00661	0.01062	0.00874
POUNDS PER HOUR		13.90	10.25	15.98	13.38
POUNDS PER MBTU		0.0329	0.0245	0.0386	0.0320

TABLE 5-2

YORK RESEARCH CORPORATION JOB NUMBER: 7-3479-33
ONE RESEARCH DRIVE, STAMFORD, CONNECTICUT 06906

CLIENT: EPA
PLANT LOCATION: COORS
UNIT TESTED: BOILER 4

PARTICULATE SUMMARY IN METRIC UNITS

DESCRIPTION	UNITS	1	2	3	AVERAGE
GENERAL DATA					
DATE OF RUN		JUN 7,77	JUN 8,77	JUN 8,77	
BAROMETRIC PRESSURE	MM.HG	623.57	632.71	632.71	
STACK PRESSURE, ABS.	MM.HG	624.88	634.02	634.02	
STACK AREA	M2	6.503	6.503	6.503	
NET TIME OF RUN	MIN	123.0	123.0	123.0	
PERCENT ISOKINETIC		100.1	100.7	101.3	100.7
GAS DATA					
AVG STACK GAS VELOCITY	M/S	13.108	13.125	12.742	12.992
AVG STACK TEMPERATURE	DEG.C	179.4	179.4	179.4	179.4
ACTUAL STACK FLOWRATE	AM3/M	5115.	5121.	4972.	5069.
STK FLOWRATE,DRY,STD	DNM3/M	2432.	2462.	2371.	2421.
MOLECULAR WT-DRY STK GAS		30.44	30.46	30.42	
MOLECULAR WT-STK GAS		29.06	29.04	28.91	
MOLE FRACTION DRY GAS		0.889	0.886	0.879	
GAS ANALYSIS (DRY PERCENT BASIS)					
CARBON DIOXIDE		14.1	14.2	14.0	14.1
OXYGEN		4.5	4.6	4.4	4.5
CARBON MONOXIDE		0.	0.	0.	0.
NITROGEN		81.4	81.2	81.6	81.4
MOISTURE BY VOL		11.1	11.4	12.1	11.5
SAMPLE COLLECTION DATA					
TOTAL H2O COLLECTED	ML	202.5	212.6	221.0	
VOL H2O VAPOR-STD COND	NM3	0.27	0.29	0.30	
VOL DRY GAS-METER COND	DM3	2.97	3.00	2.94	
VOL DRY GAS-STD COND	DNM3	2.18	2.22	2.16	
AVG GAS METER TEMP	DEG.C	56.4	59.3	63.1	
AVG ORIF PRES DROP	MM.H2O	47.315	47.823	44.902	
PARTICULATE WEIGHT DATA					
NET WEIGHT PARTIAL	MG	72.30	60.40	82.30	71.83
NET WEIGHT TOTAL	MG	94.60	70.20	110.10	91.63
PARTICULATE EMISSIONS					
PARTIAL					
MG/NORMALIZED CU.METERS		33.03	27.09	38.33	32.32
MG/NORM. CU.M @12% CO2		28.11	22.59	32.05	27.05
MG/ACTUAL CU. METERS		15.70	13.02	18.27	15.67
KILOGRAMS/HOUR		4.32	4.00	5.45	4.76
G/10^6 CALORIES		0.04529	0.03800	0.05228	0.04519
TOTAL					
MG/NORMALIZED CU.METERS		43.22	31.49	50.96	41.89
MG/NORM. CU.M @12% CO2		36.78	26.61	42.68	35.69
MG/ACTUAL CU. METERS		20.55	15.14	24.30	19.99
KILOGRAMS/HOUR		5.31	4.65	7.25	5.87
G/10^6 CALORIES		0.05926	0.04416	0.06952	0.05765

TABLE 5-3

PARTICULATE RESULTS
OUT-OF-STACK PLUS IN-STACK

Test Number	1	2	3	Avg.
In-Stack Total Wt.	94.6	70.2	110.1	91.63
In-Stack + Out-of-Stack Total Wt.	96.7	90.5	122.1	103.1
In-Stack + Out-of-Stack Results				
English:				
Grains/scfd	0.01931	0.01774	0.02470	0.0206
Grains/acf	0.00918	0.00852	0.01178	0.00983
lb/hour	14.21	13.21	20.60	16.01
lb/mBTU	0.0336	0.0316	0.0428	0.0360
Metric:				
mg/nm^3	44.18	40.60	56.51	47.10
mg/am^3	21.01	19.51	26.95	22.49
kilogram/hour	6.45	5.99	8.04	6.83
kilogram/10^6 calorie	0.0606	0.0569	0.0771	0.0649

TABLE 5-4

ELEMENTAL ANALYSIS

TEST NO.	SAMPLE TYPE	YRC SAMPLE NO.	WT.GAIN TOTAL	SODIUM MG	POTASSIUM MG	MAGNESIUM MG	IRON MG	TITANIUM MG	COPPER MG	SULFATE MG
1	In-Stack Filter	14011	72.3	0.750	0.375	4.160	4.190	0.230	0.008	0.88
1	Acetone Wash In-Stack	14012	22.3	0.135	0.035	0.563	0.730	-	0.034	0.30
1	Out-of-Stack Filter	14014	1.9	2.775	0.058	0.206	0.043	0.025	-	0.25
1	Acetone Probe Wash	14013	2.5	0.110	0.028	0.005	0.213	-	0.009	0.09
2	In-Stack Filter	14016	60.4	0.775	0.375	2.690	3.810	0.275	0.008	0.86
2	Acetone Wash In-Stack	14017	9.8	0.093	0.025	0.294	0.356	0.038	0.015	0.09
2	Out-of-Stack Filter	14018	2.5	2.625	0.080	0.156	0.056	-	-	0.40
2	Acetone Probe Wash	14019	20.1	0.155	0.043	0.213	0.525	0.038	0.014	0.31
3	In-Stack Filter	14021	82.8	0.950	0.450	3.313	5.000	0.338	0.010	1.21
3	Acetone Wash In-Stack	14022	27.3	0.165	0.060	0.463	2.940	-	0.028	0.31
3	Out-of-Stack Filter	14023	5.5	2.175	0.065	0.106	0.069	-	0.005	0.23
3	Acetone Probe Wash	14024	9.3	0.078	0.025	0.063	0.200	-	0.004	0.14
Blank	In-Stack Filter	60673	0.0	0.258	0.048	0.094	0.031	0.025	0.003	0.17
Blank	Out-of-Stack Filter	60674	0.0	1.650	0.053	0.094	0.030	-	-	-
Blank	Acetone	14015	2.3	0.068	0.018	0.050	0.044	-	-	0.08

Note: "-" Means non-detectable.

TABLE 5-5

COAL ANALYSIS

TEST NO.	COAL ANALYSIS, DRY BASIS %H	%C	%S	%N	%O	%ASH	BTU/LBM
1	4.32	64.00	0.57	1.46	17.89	11.76	11,058
2	4.69	62.96	0.54	1.45	19.58	10.78	10,771
3	4.56	65.02	0.47	1.45	20.40	8.10	11,290

Prepared by:

R. Roger Johnson
Project Director

Approved by:

Arthur E. Hudson
Manager, Western Operations

APPENDIX

A. CALCULATIONS

B. COMPUTER PRINTOUTS

C. CALCULATION TABLES

D. FIELD DATA

E. LAB RESULTS

F. CALIBRATION

A. CALCULATIONS

PARTICULATE CALCULATIONS

DEFINITIONS OF TERMS

V_m = Volume gas meter, meter conditions, dry (Ft. 3)

P_b = Barometric pressure (IN.HG)

$\overline{\Delta H}$ = Average orifice pressure differential (IN.H_2O)

T_m = Average meter temperature (Deg. F)

V_w = Volume of moisture collected (ML)

ΔP_s = Velocity head (IN. H_2O)

P_s = Stack Pressure (IN. HG)

F_s = Pitot tube coefficient from calibration of pitot tube (Dimensionless)

T_s = Stack temperature (Deg. F)

A_s = Crossectional area of stack (FT^2)

D_m = Diameter of nozzle (Inches)

θ = Time of test, (MIN)

M_f = Weight of probe, cyclone and filters (MG)

M_t = Total weight (MG)

PARTICULATE CALCULATIONS

The following are the basic equations used in calculating final data as found in the final summary.

1. Volume of dry gas sampled at standard conditions - 70°F, 29.92" Hg, ft.^{3}

$$V_{m_{std}} = \frac{17.7 \times V_m \left(P_b + \frac{\overline{\Delta H}}{13.6}\right)}{(T_m + 460)} = FT^3$$

2. Volume of water vapor at 70°F and 29.92" Hg, Ft.^{3}

$$V_{w_{gas}} = 0.0474 \times V_w = FT^3$$

3. % Moisture in stack gas

$$\%M = \frac{100 \times V_{w_{gas}}}{V_{m_{std}} + V_{w_{gas}}} = \%$$

4. Mole fraction of dry gas

$$M_d = \frac{100 - \%M}{100}$$

5. Average molecular weight of dry stack gas

$$M\,W_d = \left(\% CO_2 \times \frac{44}{100}\right) + \left(\%O_2 \times \frac{32}{100}\right) + \left(\%N_2 \times \frac{28}{100}\right)$$

6. Molecular weight of stack gas

$$M\,W = M\,W_d \times M_d + 18\,(1 - M_d)$$

7. Stack velocity at stack conditions, fpm

$$V_s = 5128.8 x F_s \sqrt{\Delta P_s \times (T_s + 460)} \left(\frac{1}{P_s \times M W}\right)^{1/2} = \text{fpm}$$

8. Stack gas volume at standard conditions, SCFM

$$Q_s = \frac{0.123 \times V_s \times A_s \times M_d \times P_s}{(T_s + 460)} = \text{SCFM}$$

9. Percent isokinetic

$$\%I = \frac{1032 \times (T_s + 460) \times V_{m_{std}}}{V_s \times \theta \times P_s \times M_d \times (D_n)^2} = \%$$

10. Particulate - probe, cyclone and filter, gr/SCF

$$C_{an} = 0.0154 \times \frac{M_f}{V_{m\ std}} = \text{gr/SCF}$$

11. Particulate total, gr/SCF

$$C_{ao} = 0.0154 \times \frac{M_t}{V_{m\ std}} = \text{gr/SCF}$$

12. Particulate - probe, cyclone and filter, gr/CF at stack conditions

$$C_{at} = \frac{17.7 \times C_{an} \times P_s \times M_d}{(T_s + 460)} = \text{gr/CF}$$

13. Particulate - total, gr/CF at stack conditions

$$C_{au} = \frac{17.7 \times C_{ao} \times P_s \times M_d}{(T_s + 460)} = \text{gr/CF}$$

14. Particulate - probe, cyclone and filter, lb/hr.

$C_{aw} = 0.00857 \times C_{an} \times Q_s = \text{lb/hr}$

15. Particulate - total, lb/hr.

$C_{ax} = 0.00857 \times C_{ao} \times Q_s = \text{lb/hr}$

EMISSION RATE CALCULATIONS

1. Compute F, DSCF/10^6BTU; DSCM/10^6Calories

$$F_{(\text{English units})} = \frac{10^6 \quad 3.64\%H + 1.53\%C + 0.57\%S + 0.14\%N - 0.46\%O}{GCV}$$

$$F_{(\text{metric})} = 1.123 \times 10^{-4} (F_{\text{English units}})$$

where:

H, C, S, N, and O are content by weight of hydrogen, carbon, sulfur, nitrogen, and oxygen; dry.

GCV is the gross caloric value (BTU/lb) on a dry basis.

2. Calculate emission rate, E

$$E = CF \frac{20.9}{20.9 - \%O_2}$$

where:

C = Pollutant concentration, lb/ft^3 or mg/m^3

F = "F" factor computed in Step 1

O_2 = Percent oxygen by volume

B. COMPUTER PRINTOUTS

YØR K RESEARCH CØRPØRATIØN JØB NUMBER: 7-8479-33
ØNE RESEARCH DRIVE, STAMFØRD, CØNNECTICUT 06906

CLIENT: EPA
PLANT LØCATIØN: CØØRS
UNIT TESTED: BØILER 4
DUCT NUMBER: BAGHØUSE
DUCT AREA: 70.00SQ.FT., 7' X 10'
DUCT LØCATIØN: ØUTLET
FILTER NUMBERS: D1124,47D1001

TEST NUMBER: F
DATE: JUN 7,77
TEST CØND: FULL LØAD
BAR. PRESS-IN HG: 24.55
PITØT TUBE FACTØR: 0.875
TIME TEST STARTED: 1045

SAMPLE PØINT --	ELAP TIME (MIN)	SAMPLE VØLUME (DCF)	PITØT RDG (INH2Ø)	ØRIFICE RDG (INH2Ø)	METER TEMP (DEG.F) IN	METER TEMP (DEG.F) ØUT	NØZ /DIA (IN)	STACK TEMP (DF)	STACK VEL (FPS)	%I --
STAR	0.	436.728								
D1	4.0	439.580	0.270	1.750	106.	104.	0.300	355.	41.476	94.5
D2	8.0	442.770	0.300	1.900	116.	104.	0.300	355.	43.719	99.5
D3	12.0	445.790	0.260	1.650	122.	104.	0.300	355.	40.700	100.6
D4	16.0	449.350	0.370	2.310	130.	106.	0.300	355.	48.553	98.8
D5	20.0	452.900	0.310	2.000	136.	107.	0.300	355.	44.442	107.0
D6	24.0	456.510	0.350	2.250	141.	109.	0.300	355.	47.222	101.9
D7	28.0	459.980	0.330	2.100	144.	110.	0.300	355.	45.853	100.6
D8	32.0	463.457	0.330	2.100	146.	112.	0.300	355.	45.853	100.5
STAR	32.0	463.457								
C1	36.0	466.700	0.300	1.900	144.	114.	0.300	355.	43.719	98.2
C2	40.0	469.870	0.270	1.750	144.	114.	0.300	355.	41.476	101.2
C3	44.0	472.960	0.250	1.600	148.	116.	0.300	355.	39.910	102.0
C4	48.0	476.020	0.250	1.600	150.	117.	0.300	355.	39.910	100.8
C5	52.0	478.960	0.230	1.460	150.	118.	0.300	355.	38.280	100.8
C6	56.0	482.010	0.250	1.600	151.	119.	0.300	355.	39.910	100.2
C7	60.0	484.890	0.280	1.780	152.	120.	0.300	355.	42.237	89.3
C8	64.0	488.182	0.270	1.750	146.	120.	0.300	355.	41.476	104.4
STAR	64.0	488.182								
B1	68.0	491.380	0.300	1.900	145.	121.	0.300	355.	43.719	96.3
B2	72.0	494.720	0.290	1.860	150.	122.	0.300	355.	42.984	101.8
B3	76.0	497.830	0.250	1.600	152.	124.	0.300	355.	39.910	101.7
B4	80.0	500.750	0.230	1.460	154.	124.	0.300	355.	38.280	99.4
B5	84.0	503.780	0.240	1.520	154.	124.	0.300	355.	39.104	101.0
B6	88.0	506.970	0.270	1.750	155.	126.	0.300	355.	41.476	100.1
B7	92.0	510.460	0.310	2.000	157.	126.	0.300	355.	44.442	102.1
B8	96.0	514.009	0.330	2.100	160.	127.	0.300	355.	45.853	100.4
STAR	96.0	514.009								
A1	100.0	517.280	0.270	1.750	156.	127.	0.300	355.	41.476	102.5
A2	104.0	520.570	0.290	1.860	156.	128.	0.300	355.	42.984	99.4
A3	108.0	523.860	0.270	1.750	156.	128.	0.300	355.	41.476	103.0
A4	112.0	527.170	0.290	1.860	158.	128.	0.300	355.	42.984	99.9
A5	116.0	530.630	0.320	2.050	160.	129.	0.300	355.	45.153	99.2
A6	120.0	534.140	0.330	2.100	161.	129.	0.300	355.	45.853	99.0
A7	124.0	537.770	0.350	2.250	162.	130.	0.300	355.	47.222	99.3
A8	128.0	541.442	0.360	2.300	163.	131.	0.300	355.	47.892	99.0

YØRK RESEARCH CØRPØRATIØN JØB NUMBER: 7-8479-33
ØNE RESEARCH DRIVE, STAMFØRD, CØNNECTICUT 06906

CLIENT: EPA
PLANT LØCATIØN: CØØRS
UNIT TESTED: BØILER 4
DUCT NUMBER: BAGHØUSE
DUCT AREA: 70.00SQ.FT. 7' X 10'
DUCT LØCATIØN: ØUTLET
FILTER NUMBERS: D1135,47D1016

TEST NUMBER: 2
DATE: JUN 8,77
TEST CØND: FULL LØAD
BAR. PRESS-IN HG: 24.91
PITØT TUBE FACTØR: 0.875
TIME TEST STARTED: 850

SAMPLE PØINT	ELAP TIME (MIN)	SAMPLE VØLUME (DCF)	PITØT RDG (INH2Ø)	ØRIFICE RDG (INH2Ø)	METERTEMP (DEG.F) IN	METERTEMP (DEG.F) ØUT	NØZ DIA (IN)	STACK TEMP (DF)	STACK VEL (FPS)	%I
STAR	0.	542.872								
A1	4.0	545.890	0.270	1.700	110.	108.	0.300	355.	41.293	101.0
A2	8.0	549.260	0.330	2.100	116.	108.	0.300	355.	45.651	101.7
A3	12.0	552.640	0.300	1.900	125.	108.	0.300	355.	43.526	106.1
A4	16.0	556.010	0.330	2.100	133.	109.	0.300	355.	45.651	100.3
A5	20.0	559.440	0.320	2.050	138.	110.	0.300	355.	44.954	103.2
A6	24.0	562.960	0.350	2.250	145.	112.	0.300	355.	47.014	100.6
A7	28.0	566.660	0.380	2.400	149.	114.	0.300	355.	48.987	101.1
A8	32.0	570.330	0.360	2.300	152.	116.	0.300	355.	47.681	102.6
STAR	32.0	570.330								
B1	36.0	573.700	0.300	1.900	152.	118.	0.300	355.	43.526	102.9
B2	40.0	576.960	0.290	1.850	153.	119.	0.300	355.	42.795	101.1
B3	44.0	580.130	0.270	1.700	154.	121.	0.300	355.	41.293	101.6
B4	48.0	583.260	0.260	1.650	155.	122.	0.300	355.	40.521	102.1
B5	52.0	586.340	0.260	1.650	156.	123.	0.300	355.	40.521	100.3
B6	56.0	589.680	0.280	1.800	158.	126.	0.300	355.	42.051	104.5
B7	60.0	593.050	0.320	2.050	160.	128.	0.300	355.	44.954	98.4
B8	64.0	596.649	0.350	2.250	162.	127.	0.300	355.	47.014	100.5
STAR	64.0	596.649								
C1	68.0	599.920	0.290	1.850	152.	126.	0.300	355.	42.795	101.0
C2	72.0	603.120	0.270	1.700	156.	128.	0.300	355.	41.293	101.9
C3	76.0	606.180	0.250	1.580	159.	128.	0.300	355.	39.734	101.0
C4	80.0	609.140	0.240	1.500	160.	128.	0.300	355.	38.931	99.7
C5	84.0	612.250	0.250	1.580	160.	128.	0.300	355.	39.734	102.6
C6	88.0	615.370	0.250	1.580	161.	131.	0.300	355.	39.734	102.6
C7	92.0	618.750	0.300	1.900	164.	132.	0.300	355.	43.526	101.3
C8	96.0	622.188	0.310	2.000	165.	133.	0.300	355.	44.246	101.2
STAR	96.0	622.188								
D1	100.0	625.250	0.250	1.580	157.	131.	0.300	355.	39.734	101.0
D2	104.0	628.400	0.280	1.800	160.	133.	0.300	355.	42.051	97.9
D3	108.0	631.640	0.250	1.580	162.	133.	0.300	355.	39.734	106.4
D4	112.0	634.850	0.270	1.700	163.	134.	0.300	355.	41.293	101.3
D5	116.0	638.230	0.300	1.900	164.	134.	0.300	355.	43.526	101.2
D6	120.0	641.730	0.320	2.050	166.	134.	0.300	355.	44.954	101.3
D7	124.0	645.270	0.320	2.050	167.	135.	0.300	355.	44.954	102.3
D8	128.0	648.910	0.350	2.250	168.	135.	0.300	355.	47.014	100.6

YØR K RESEARCH CØRPØRATIØN JØB NUMBER: 7-8479-33
ØNE RESEARCH DRIVE, STAMFØRD, CØNNECTICUT 06906

CLIENT: EPA
PLANT LØCATIØN: CØØRS
UNIT TESTED: BØILER 4
DUCT NUMBER: BAGHØUSE
DUCT AREA: 70.0SQ.FT. 7' X 10'
DUCT LØCATIØN: ØUTLET
FILTER NUMBERS: D1147,47D1017

TEST NUMBER: 3
DATE: JUN 8,77
TEST CØND: FULL LØAD
BAR. PRESS-IN HG: 24.91
PITØT TUBE FACTØR: 0.875
TIME TEST STARTED: 1300

SAMPLE PØINT --	ELAP TIME (MIN)	SAMPLE VØLUME (DCF)	PITØT RDG (INH2Ø)	ØRIFICE RDG (INH2Ø)	METER TEMP (DEG.F) IN	ØUT	NØZ DIA (IN)	STACK TEMP (DF)	STACK VEL (FPS)	%I -- --
STAR	0.	649.315								
D1	4.0	652.370	0.250	1.600	118.	116.	0.300	355.	39.740	104.5
D2	8.0	655.550	0.280	1.800	128.	116.	0.300	355.	42.057	102.1
D3	12.0	658.610	0.250	1.600	134.	117.	0.300	355.	39.740	103.4
D4	16.0	661.690	0.260	1.650	140.	118.	0.300	355.	40.527	101.5
D5	20.0	664.980	0.300	1.900	145.	120.	0.300	355.	43.533	100.5
D6	24.0	668.260	0.280	1.800	151.	121.	0.300	355.	42.057	103.1
D7	28.0	671.720	0.340	2.170	155.	122.	0.300	355.	46.345	98.4
D8	32.0	675.168	0.310	2.000	158.	124.	0.300	355.	44.253	102.3
STAR	32.0	675.168								
C1	36.0	678.250	0.260	1.650	150.	126.	0.300	355.	40.527	100.2
C2	40.0	681.450	0.270	1.700	153.	127.	0.300	355.	41.299	101.8
C3	44.0	684.480	0.230	1.450	158.	128.	0.300	355.	38.117	103.9
C4	48.0	687.460	0.240	1.500	160.	129.	0.300	355.	38.937	99.9
C5	52.0	690.420	0.240	1.500	162.	130.	0.300	355.	38.937	99.0
C6	56.0	693.700	0.270	1.700	165.	132.	0.300	355.	41.299	103.1
C7	60.0	696.850	0.260	1.650	167.	133.	0.300	355.	40.527	100.6
C8	64.0	700.113	0.280	1.800	169.	135.	0.300	355.	42.057	100.2
STAR	64.0	700.113								
B1	68.0	703.340	0.280	1.800	161.	134.	0.300	355.	42.057	99.7
B2	72.0	706.770	0.310	2.000	165.	136.	0.300	355.	44.253	100.4
B3	76.0	709.870	0.230	1.450	166.	136.	0.300	355.	38.117	105.1
B4	80.0	712.920	0.240	1.500	166.	136.	0.300	355.	38.937	101.2
B5	84.0	715.940	0.240	1.500	167.	136.	0.300	355.	38.937	100.2
B6	88.0	719.210	0.280	1.800	168.	138.	0.300	355.	42.057	100.3
B7	92.0	722.540	0.290	1.850	169.	138.	0.300	355.	42.801	100.3
B8	96.0	725.938	0.290	1.850	170.	140.	0.300	355.	42.801	102.1
STAR	96.0	725.938								
A1	100.0	729.250	0.290	1.850	168.	139.	0.300	355.	42.801	99.7
A2	104.0	732.530	0.240	1.500	168.	139.	0.300	355.	38.937	108.5
A3	108.0	735.820	0.280	1.800	170.	140.	0.300	355.	42.057	100.6
A4	112.0	739.310	0.310	2.000	171.	140.	0.300	355.	44.253	101.4
A5	116.0	742.760	0.320	2.050	172.	140.	0.300	355.	44.961	98.6
A6	120.0	746.270	0.320	2.050	172.	140.	0.300	355.	44.961	100.3
A7	124.0	749.900	0.350	2.250	174.	141.	0.300	355.	47.021	99.0
A8	128.0	753.296	0.290	1.850	173.	141.	0.300	355.	42.801	101.8

C. CALCULATION TABLES

Coal Analysis, Dry Basis

TEST Number	% H	% C	% S	% N	% O	% Ash	BTU/lbm	F (DSCF/10^6 Btu)	F (dscm/10^6 cc)
1	4.32	64.00	0.57	1.46	17.89	11.76	11,058	9.58×10^3	1.0762
2	4.69	62.96	0.54	1.45	19.58	10.78	10,771	9.739×10^3	1.0939
3	4.56	65.02	0.47	1.45	20.40	8.10	11,290	9.594×10^3	1.0776

Computation of Emission Rate; E, lb/MBTU, g/10^6 calorie

	F (ENGLISH)	C g/scf	O %	$\frac{20.9}{20.9 - O\%}$	C mg/Nm³	F (metric)	E lb/MBTU	E (g/10^6 calorie)
1	9581	0.01889	4.5	1.274	43.22	1.0762	0.0329	0.05926
2	9739	0.01376	4.6	1.282	31.49	1.0939	0.0245	0.04416
3	9594	0.02227	4.4	1.266	50.96	1.0776	0.0386	0.06952
Average emissions:							0.0320	0.05765

TEST Number 1. OPACITY DATA

START OPACITY 1000 End OPACITY 1338

START PARTICULATE 1045 End Particulate 1300

6 minute average

START TO	6	12	18	24	30	36	42	48	54	60	average
1 hour	0	.2	.417	.104	1.875	.625	1.667	1.146	.521	0	.656
2 hour	.417	.417	1.25	.208	.833	.417	.313	0	0	1.354	.521
3 hour	.417	0	.938	1.042	1.042	.208	0	0	0	.208	.386
4 hour	.313	.938	1.875	1.25	.938	.938	.227				.926 / .60

N = 0 (averaged as 0%); 0 = 5% or less (averaged as 2.5%)

$$\text{Average} = \frac{\Sigma \text{ observation in 6 minute time interval}}{\text{TOTAL OBSERVATIONS for TIME INTERVAL}}$$

TOTAL OBSERVATION = 24 (except at end of observation period where there may be fewer observations)

TEST Number 2 OPACITY DATA

START OPACITY 820 End OPACITY 1138

START PARTICULATE 850 End Particulate 1105

6 minute average

START TO	6	12	18	24	30	36	42	48	54	60	average
1 hour	1.45	.52	.94	1.35	1.46	1.56	.52	1.77	1.15	1.46	1.22
2 hour	.31	1.15	1.25	.94	.31	.63	.73	1.56	.21	.73	.78
3 hour	1.25	1.15	.52	1.46	.83	1.67	.73	.83	~~1.07~~ .63	2.4	1.15
4 hour	1.67	1.56	1.88	1.88							1.75 ~~1.13~~

N = 0 (averaged as 0%); O = 5% or less (averaged as 2.5%)

$$\text{Average} = \frac{\Sigma \text{ observation in 6 minute time interval}}{\text{TOTAL OBSERVATIONS for TIME INTERVAL}}$$

TOTAL OBSERVATION = 24 (except at end of observation period where there may be fewer observations)

TEST Number 3 OPACITY DATA

START OPACITY 1230 End OPACITY 1550

START PARTICULATE 1300 End Particulate 1516

6 minute average

START TO	6	12	18	24	30	36	42	48	54	60	average
1 hour	.31	.21	.12	*	*	.63	.21	.52	.31	.21	.32
2 hour	0	.10	.31	.52	0	.10	.21	.63	0	.10	.20
3 hour	.42	.42	0	.31	.21	.10	.21	0	0	.10	.18
4 hour	.10	0	.31	.21							.16
											.22

* no data

N = 0 (averaged as 0%); 0 = 5% or less (averaged as 2.5%)

$$\text{Average} = \frac{\Sigma \text{ observation in 6 minute time interval}}{\text{TOTAL OBSERVATIONS for TIME INTERVAL}}$$

TOTAL OBSERVATION = 24 (except at end of observation period where there may be fewer observations)

D. FIELD DATA

Test [redacted] Leak check 1 min .012 Start [redacted] Filter [redacted] 320 [redacted]

PAUL

FIELD DATA

PLANT [illegible]
DATE [illegible]
SAMPLING LOCATION BOILER 4 BAGHOUSE
SAMPLE TYPE [illegible]
RUN NUMBER [illegible]
OPERATOR PAUL & RW
AMBIENT TEMPERATURE 110°
BAROMETRIC PRESSURE 24.55
STATIC PRESSURE, (P_s) 0.7
FILTER NUMBER (s) D1124 / 47D1001

14011 FILTER
14012 INSTACK
14013 INSTACK A/N
14014 PROBE A/N
14015 HTRBOX FILTER
ACETONE BLK .4680 g / .1241 g

PROBE LENGTH AND TYPE STAINLESS STEEL 8' IN STACK TILTED
NOZZLE I.D. 0.300
ASSUMED MOISTURE, % 12%
SAMPLE BOX NUMBER 1RD-8
METER BOX NUMBER D-3
METER $\Delta H_@$ 1.95
C FACTOR 1.13
PROBE HEATER SETTING 115
HEATER BOX SETTING 410
REFERENCE Δp .295

SCHEMATIC OF TRAVERSE POINT LAYOUT

READ AND RECORD ALL DATA EVERY 4 MINUTES

TRAVERSE POINT NUMBER	SAMPLING TIME, min	CLOCK TIME (24-hr CLOCK)	GAS METER READING (V_m), ft^3	VELOCITY HEAD (Δp_s), in. H_2O	ORIFICE PRESSURE DIFFERENTIAL (ΔH), in. H_2O DESIRED	ORIFICE PRESSURE DIFFERENTIAL (ΔH), in. H_2O ACTUAL	STACK TEMPERATURE (T_s), °F	DRY GAS METER TEMPERATURE INLET ($T_{m\,in}$), °F	DRY GAS METER TEMPERATURE OUTLET ($T_{m\,out}$), °F	PUMP VACUUM, in. Hg	SAMPLE BOX TEMPERATURE, °F		IMPINGER TEMPERATURE, °F
START	0	10:45	436.728								FILTER		
D 1	4	10:49	439.58	.27	1.75	1.75	355	106	104	5.0	308	315	116
2	8	10:53	442.77	.30	1.90	1.90	355	116	104	5.2	308	327	116
3	12	10:57	445.79	.26	1.65	1.65	355	122	104	6.0	310	335	117
4	16	11:01	449.35	.36	2.31	2.31	355	130	106	7.0	313	337	132
5	20	11:05	452.90	.31	2.00	2.00	355	136	107	6.5	315	339	138
6	24	11:09	456.51	.35	2.25	2.25	355	141	109	6.5	312	340	115
7	28	11:13	459.98	.33	2.10	2.10	355	144	110	6.5	310	335	104
8	32	11:17	463.457	.33	2.10	2.10	355	146	112	7.0	310	332	98
START	32	11:20	463.457										
C 1	36	11:24	466.70	.30	1.90	1.90	355	144	114	6.5	311	325	99
2	40	11:28	469.87	.27	1.75	1.75	355	144	114	6.0	308	332	99
3	44	11:32	472.96	.25	1.60	1.60	355	148	116	6.0	306	335	99
4	48	11:36	476.02	.25	1.60	1.60	355	150	117	6.0	305	335	99
5	52	11:40	478.96	.23	1.46	1.46	355	150	118	6.0	307	332	99
6	56	11:44	482.01	.25	1.60	1.60	355	151	119	6.0	307	330	99
7	60	11:48	484.89	.28	1.78	1.78	355	152	120	6.5	309	328	96
8	64	11:52	488.182	.27	1.75	1.75	355	146	120	6.5	275	300	95
START	64	11:54	488.182										
B 1	68	11:58	491.38	.30	1.90	1.90	355	145	121	6.5	296	308	100
2	72	12:02	494.72	.29	1.86	1.86	355	150	122	6.5	305	325	92
3	76	12:06	497.83	.25	1.60	1.60	355	152	124	6.0	310	330	92
4	80	12:10	500.75	.23	1.46	1.46	355	154	124	6.0	308	330	92
5	84	12:14	503.78	.24	1.52	1.52	355	154	124	6.0	310	330	93

11:46 STOP 484.123 Power out 2 min.

COMMENTS: 1 impinger Tare

ES-041

SG.

#1) 551.5 / 675.0 #2) 574.0 / 599.5 #3) 449.0 / 460.4 #4) 741.5 / 783.6

[redacted] Run Test # [redacted] Fuel [redacted]

TRAVERSE POINT NUMBER	SAMPLING TIME, min	CLOCK TIME (24-hr CLOCK)	GAS METER READING (V_m), ft^3	VELOCITY HEAD (Δp_s), in. H_2O	ORIFICE PRESSURE DIFFERENTIAL (ΔH), in H_2O DESIRED	ORIFICE PRESSURE DIFFERENTIAL (ΔH), in H_2O ACTUAL	STACK TEMPERATURE (T_s), °F	DRY GAS METER TEMPERATURE INLET ($T_{m\,in}$), °F	DRY GAS METER TEMPERATURE OUTLET ($T_{m\,out}$), °F	PUMP VACUUM, in Hg	SAMPLE BOX TEMPERATURE, °F		IMPINGER TEMPERATURE, °F
												FILTER	
B 6	88	12:18	506.97	.27	1.75	1.75	355	155	126	7.0	312	330	91
7	92	12:22	510.46	.31	2.00	2.00	355	157	126	7.5	313	325	91
8	96	12:26	514.009	.33	2.10	2.10	355	160	127	8.0	315	325	92
[illegible]	96	12:28	514.009										
A 1	100	12:32	517.28	.27	1.75	1.75	355	156	127	7.5	314	322	95
2	104	12:36	520.57	.29	1.86	1.86	355	156	128	7.5	310	330	93
3	108	12:40	523.86	.27	1.75	1.75	355	156	128	7.5	305	330	93
4	112	12:44	527.17	.29	1.86	1.86	355	158	128	8.0	303	330	93
5	116	12:48	530.63	.32	2.05	2.05	355	160	129	9.0	306	325	94
6	120	12:52	534.14	.33	2.10	2.10	355	161	129	9.5	308	325	93
7	124	12:56	537.77	.35	2.25	2.25	355	162	130	10.5	312	325	93
8	128	13:00	541.442	.36	2.30	2.30	355	163	131	11.0	318	330	93

FINISH LEAK CHECK 1 MIN. 0.012

ES-042

DRY MOLECULAR WEIGHT DETERMINATION

PLANT EPA/ COORS

DATE JUNE 7, 1977

SAMPLING TIME (24-hr CLOCK) TEST 1

SAMPLING LOCATION OUTLET BAGHOUSE, BOILER 4

SAMPLE TYPE (BAG, INTEGRATED, CONTINUOUS)

ANALYTICAL METHOD ORSAT

AMBIENT TEMPERATURE LAB ~ 75

OPERATOR

COMMENTS:

RUN / GAS	1		2		3		AVERAGE NET VOLUME	MULTIPLIER	MOLECULAR WEIGHT OF STACK GAS (DRY BASIS) M_d, lb/lb-mole
	ACTUAL READING	NET	ACTUAL READING	NET	ACTUAL READING	NET			
CO_2	8.4	8.4	8.8	8.8	8.8	8.8	8.7	44/100	
O_2 (NET IS ACTUAL O_2 READING MINUS ACTUAL CO_2 READING)	19.0	10.6	19.4	10.6	19.4	10.6	10.6	32/100	
CO (NET IS ACTUAL CO READING MINUS ACTUAL O_2 READING)								28/100	
N_2 (NET IS 100 MINUS ACTUAL CO READING)								28/100	
								TOTAL	

ES-043

Date 6/7/77

Observer [illegible]

Location

Name ADOLPH COORS COMPANY

Address GOLDEN, CO

Observation Point EAST OF STACK

Stack - Distance From 50' Height 50'

Wind - Speed 0-10 Direction SE

Type of Installation BOILER

Fuel COAL FIRED

Observation began 1000 Ended CONTINUE NEXT PAGE

Density Smoke Tabulation

No. Units × Equiv. No. 1 Units

Units No. 0

Units No. ½

Units No. 1

Units No. 1½

Units No. 2

Units No. 2½

Units No. 3

Units No. 3½

Units No. 4

Units No. 4½

Units No. 5

Units Equiv. Units

Equiv. Units / Units × 20% =

% Smoke Density

Remarks:

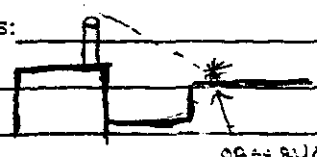

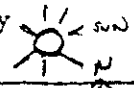

OBSERVATION POINT 45° ANGLE

	0	15	30	45		0	15	30	45
0	N	N	N	N	30	N	N	N	N
1	N	N	N	N	31	N	N	N	N
2	N	N	N	N	32	N	N	N	N
3	N	N	N	N	33	N	N	N	N
4	N	N	N	N	34	N	O	10	O
5	N	N	N	N	35	N	N	N	N
6	N	N	N	N	36	N	N	N	N
7	N	N	N	N	37	N	N	10	O
8	N	N	N	N	38	O	N	N	N
9	O	N	N	N	39	N	N	N	N
10	N	O	N	N	40	N	N	O	10
11	N	N	N	N	41	10	O	N	N
12	O	O	N	N	42	N	N	N	N
13	N	N	N	N	43	N	N	N	10
14	N	N	O	N	44	O	N	N	N
15	N	N	N	N	45	N	N	N	N
16	N	N	N	N	46	N	N	N	O
17	N	N	N	O	47	10	O	N	N
18	N	N	N	N	48	N	O	N	N
19	N	N	O	N	49	N	N	N	N
20	N	N	N	N	50	O	O	N	O
21	N	N	N	N	51	O	N	N	N
22	N	N	N	N	52	N	N	N	N
23	N	N	N	N	53	N	N	N	N
24	N	N	N	10	54	N	N	N	N
25	10	10	O	O	55	N	N	N	N
26	O	O	O	O	56	N	N	N	N
27	N	N	N	N	57	N	N	N	N
28	N	N	N	N	58	N	N	N	N
29	N	N	N	N	59	N	N	N	N

SKY VERY LIGHTLY OVERCAST WITH WHITE CLOUDS

WHITE SMOKE

Owner

Manager

Address

O = 5% OR LESS

N = NO VISIBLE EMISSIONS

Date 6/7/77

Observer Joe F. Olson

Location

Name ADOLPH COORS COMPANY

Address GOLDEN, CO

Observation Point SAME AS PAGE 1

Stack - Distance From ____ Height ____

Wind - Speed 6-10 Direction SE

Type of Installation BOILER

Fuel COAL FIRED

Observation began 1100 Ended CONTINUE NEXT PAGE

Density Smoke Tabulation

No. Units × Equiv. No. 1 Units

Units No. 0 ____

Units No. ½ ____

Units No. 1 ____

Units No. 1½ ____

Units No. 2 ____

Units No. 2½ ____

Units No. 3 ____

Units No. 3½ ____

Units No. 4 ____

Units No. 4½ ____

Units No. 5 ____

____ Units ____ Equiv. Units

Equiv. Units / Units × 20% =

____ % Smoke Density

Remarks: BLUE SKY WHITE SMOKE

	0	15	30	45		0	15	30	45
0	N	N	N	N	30	N	N	0	0
1	N	N	N	N	31	N	N	N	N
2	N	N	0	0	32	N	N	N	N
3	N	N	N	N	33	N	N	N	0
4	N	N	N	N	34	0	N	N	N
5	N	N	0	0	35	N	N	N	N
6	N	0	N	N	36	N	N	N	N
7	N	N	N	N	37	0	N	N	N
8	N	N	N	0	38	N	N	N	N
9	0	N	0	N	39	N	N	N	N
10	N	N	N	N	40	0	0	N	N
11	N	N	N	N	41	N	N	N	N
12	10	0	0	N	42	N	N	N	N
13	N	N	N	N	43	N	N	N	N
14	N	N	N	N	44	N	N	N	N
15	10	0	0	N	45	N	N	N	N
16	N	N	N	N	46	N	N	N	N
17	N	N	N	N	47	N	N	N	N
18	N	N	N	N	48	N	N	N	N
19	N	N	N	N	49	N	N	N	N
20	N	N	N	N	50	N	N	N	N
21	N	0	0	N	51	N	N	N	N
22	N	N	N	N	52	N	N	N	N
23	N	N	N	N	53	N	N	N	N
24	N	N	0	0	54	N	N	N	N
25	N	N	N	N	55	N	N	0	10
26	N	N	N	N	56	0	0	N	N
27	N	N	10	0	57	N	N	0	N
28	0	N	N	N	58	N	N	N	10
29	N	N	N	N	59	0	N	N	N

1146*

* 1146 SHUT DOWN SAMPLING TRAIN. LOSS OF POWER SHUT DOWN FOR ~2 MIN

Owner

Manager ____

Address ____

Date 6/7/77

Observer [illegible]

Location

Name ADOLPH COORS COMPANY

Address GOLDEN, CO

Observation Point SAME AS PAGE 1

Stack - Distance From ____ Height ____

Wind - Speed 0-10 Direction SE

Type of Installation BOILER

Fuel COAL FIRED

Observation began 1200 Ended CONTINUE NEXT PAGE

Density Smoke Tabulation

No. Units × Equiv. No. 1 Units

Units No. 0 ____

Units No. ½ ____

Units No. 1 ____

Units No. 1½ ____

Units No. 2 ____

Units No. 2½ ____

Units No. 3 ____

Units No. 3½ ____

Units No. 4 ____

Units No. 4½ ____

Units No. 5 ____

Units ____ Equiv. Units ____

Equiv. Units / Units × 20% =

% Smoke Density

Remarks: LIGHTLY OVERCAST WITH WHITE CLOUDS WHITE SMOKE

	0	15	30	45		0	15	30	45
0	N	N	N	N	30	0	0	N	N
1	N	N	N	N	31	N	N	N	N
2	0	0	N	N	32	N	N	N	N
3	N	N	N	N	33	N	N	N	N
4	N	N	N	N	34	N	N	N	N
5	0	0	N	N	35	N	N	N	N
6	N	N	N	N	36	N	N	N	N
7	N	N	N	N	37	N	N	N	N
8	N	N	N	N	38	N	N	N	N
9	N	N	N	N	39	N	N	N	N
10	N	N	N	N	40	N	N	N	N
11	N	N	N	N	41	N	N	N	N
12	N	N	N	N	42	N	N	N	N
13	N	N	N	N	43	N	N	N	N
14	N	N	0	0	44	N	N	N	N
15	N	N	0	N	45	N	N	N	N
16	N	N	N	N	46	N	N	N	N
17	0	N	10	0	47	N	N	N	N
18	0	0	0	N	48	N	N	N	N
19	N	N	N	N	49	N	N	N	N
20	N	N	0	0	50	N	N	N	N
21	0	N	N	N	51	N	N	N	N
22	N	N	N	N	52	N	N	N	N
23	N	N	N	10	53	N	N	N	N
24	0	N	N	N	54	N	N	N	N
25	N	N	N	N	55	0	0	N	N
26	N	N	N	10	56	N	N	N	N
27	10	0	N	N	57	N	N	N	N
28	N	N	N	N	58	N	N	N	N
29	N	N	N	N	59	N	N	N	N

Owner

Manager ____

Address ____

Date 6/7/77

Observer [illegible]

Location

Name ADOLPH COORS COMPANY

Address GOLDEN, CO

Observation Point SAME AS PAGE ONE

Stack - Distance From ____ Height ____

Wind - Speed 0-10 Direction SE

Type of Installation BOILER

Fuel COAL FIRED

Observation began 1320 Ended 1338

Density Smoke Tabulation

No. Units × Equiv. No. 1 Units

Units No. 0 ____

Units No. ½ ____

Units No. 1 ____

Units No. 1½ ____

Units No. 2 ____

Units No. 2½ ____

Units No. 3 ____

Units No. 3½ ____

Units No. 4 ____

Units No. 4½ ____

Units No. 5 ____

____ Units ____ Equiv. Units

Equiv. Units / Units × 20% =

____ % Smoke Density

Remarks: LIGHTLY OVERCAST WITH WHITE CLOUDS WHITE SMOKE SUN NOW ALMOST DIRECTLY OVERHEAD

* SAMPLING (PARTICULATE) FINISHED

	0	15	30	45		0	15	30	45
0	N	N	N	N	30	N	N	N	N
1	N	N	N	N	31	N	N	N	N
2	N	N	N	N	32	N	0	0	0
3	N	N	N	N	33	N	N	N	N
4	N	0	0	0	34	0	N	N	N
5	N	N	N	N	35	N	N	0	10
6	N	N	N	N	36	0	N	N	N
7	N	N	0	10	37	N	N	N	N
8	N	N	N*	N	38	N	N	N	OPACITY TEST FINISHED
9	N	N	N	N	39				
10	N	0	0	0	40				
11	0	N	N	N	41				
12	N	N	N	N	42				
13	N	N	N	0	43				
14	0	N	0	0	44				
15	N	N	N	N	45				
16	N	N	10	10	46				
17	10	0	0	N	47				
18	N	N	N	N	48				
19	N	N	N	N	49				
20	10	10	0	0	50				
21	N	0	0	N	51				
22	N	N	N	N	52				
23	N	N	N	N	53				
24	N	N	N	N	54				
25	N	N	N	N	55				
26	N	N	N	N	56				
27	N	N	N	N	57				
28	N	N	N	N	58				
29	N	10	10	0	59				

Owner Manager ____

Address ____

Le[redacted]ck [redacted]ta[redacted] 0.[redacted]5 [redacted]) [redacted]in[redacted]

FIELD DATA

IN STACK FILTER 14016
ACET WASH 14017
OUT OF STACK FILTER 14018
acetone wash 14019

PLANT Coors Brewery Golden Colo.
DATE 8/7/77
SAMPLING LOCATION BOILER #4 BAGHOUSE
SAMPLE TYPE PARTICULATE EPA METHOD II
RUN NUMBER ~~[illegible]~~ TWO
OPERATOR PAUL FITWIS
AMBIENT TEMPERATURE 110
BAROMETRIC PRESSURE 24.91
STATIC PRESSURE, (P_s) .70
FILTER NUMBER (s) D1135, 0.4742g Tare
47D1016, 0.1267g

PROBE LENGTH AND TYPE 8' SS INSTACK FILTER
NOZZLE I.D. 0.300
ASSUMED MOISTURE, % 12
SAMPLE BOX NUMBER IRO-8
METER BOX NUMBER U-3
METER $\Delta H_@$ 1.95
C FACTOR 1.13
PROBE HEATER SETTING 115
HEATER BOX SETTING
REFERENCE Δp 0.295

SCHEMATIC OF TRAVERSE POINT LAYOUT

READ AND RECORD ALL DATA EVERY 4 MINUTES

TRAVERSE POINT NUMBER	SAMPLING TIME, min	CLOCK TIME (24-hr CLOCK)	GAS METER READING (V_m), ft^3	VELOCITY HEAD (Δp_s), in. H_2O	ORIFICE PRESSURE DIFFERENTIAL (ΔH), in. H_2O DESIRED	ORIFICE PRESSURE DIFFERENTIAL (ΔH), in. H_2O ACTUAL	STACK TEMPERATURE (T_s), °F	DRY GAS METER TEMPERATURE INLET ($T_{m\,in}$), °F	DRY GAS METER TEMPERATURE OUTLET ($T_{m\,out}$), °F	PUMP VACUUM, in. Hg	SAMPLE BOX TEMPERATURE, °F		IMPINGER TEMPERATURE, °F
START	0	8:50	542.872								FILTER		
A1	4	8:54	545.89	.27	1.70	1.70	355	111	108	5.5	290	280	96
2	8	8:58	549.26	.33	2.10	2.10	355	116	108	6.0	292	295	94
3	12	9:02	552.64	.30	1.90	1.90	355	125	108	6.5	292	305	90
4	16	9:06	556.01	.33	2.10	2.10	355	133	109	7.0	305	320	85
5	20	9:10	559.44	.32	2.05	2.05	355	138	110	7.0	313	327	86
6	24	9:14	562.96	.35	2.25	2.25	355	145	112	7.5	317	330	86
7	28	9:18	566.66	.38	2.40	2.40	355	149	114	8.0	326	330	86
8	32	9:22	570.330	.36	2.30	2.30	355	152	116	8.0	328	330	86
START	32	9:23	570.330										
B1	36	9:27	573.70	.30	1.90	1.90	355	152	118	7.0	329	330	96
2	40	9:31	576.96	.29	1.85	1.85	355	153	119	7.0	330	335	94
3	44	9:35	580.13	.27	1.70	1.70	355	154	121	6.5	328	335	94
4	48	9:39	583.26	.26	1.65	1.65	355	155	122	6.5	330	335	94
5	52	9:43	586.34	.26	1.65	1.65	355	156	123	6.5	333	340	93
6	56	9:47	589.68	.28	1.80	1.80	355	158	126	7.0	335	340	93
7	60	9:51	593.05	.32	2.05	2.05	355	160	128	7.5	299	335	92
8	64	9:55	596.649	.35	2.25	2.25	355	162	127	8.5	245	318	92
START	64	9:58	596.649										
C1	68	10:02	599.92	.29	1.85	1.85	355	152	126	7.5	277	300	108
2	72	10:06	603.12	.27	1.70	1.70	355	156	128	7.5	304	320	108
3	76	10:10	606.18	.25	1.58	1.58	355	159	128	7.0	310	320	106
4	80	10:14	609.14	.24	1.50	1.50	355	160	128	7.0	320	325	105
5	84	10:18	612.25	.25	1.58	1.58	355	160	128	7.5	325	330	104

ORSATE ← START

COMMENTS: IMP. TARE WTS / FINAL WTS
#1 550.0/756.3 #2 585.5/542.8 #3 451.1/461.0 #4 835.0/874.1

ES-041

TRAVERSE POINT NUMBER	SAMPLING TIME, min	CLOCK TIME (24-hr CLOCK)	GAS METER READING (V_m), ft^3	VELOCITY HEAD (Δp_s), in. H_2O	ORIFICE PRESSURE DIFFERENTIAL (ΔH), in H_2O DESIRED	ORIFICE PRESSURE DIFFERENTIAL (ΔH), in H_2O ACTUAL	STACK TEMPERATURE (T_s), °F	DRY GAS METER TEMPERATURE INLET ($T_{m\,in}$), °F	DRY GAS METER TEMPERATURE OUTLET ($T_{m\,out}$), °F	PUMP VACUUM, in Hg	SAMPLE BOX TEMPERATURE, °F		IMPINGER TEMPERATURE, °F
6	88	10:22	615.37	.25	1.58	1.58	355	161	131	7.5	326	330	101
7	92	10:26	618.75	.30	1.90	1.90	355	164	132	9.0	323	330	105
8	96	10:30	622.188	.31	2.00	2.00	355	165	133	10.0	320	330	101
STOP	96	10:32	622.188										
D1	100	10:37	625.25	.25	1.58	1.58	355	157	131	8.0	323	330	102
2	104	10:41	628.40	.28	1.80	1.80	355	160	133	9.5	322	330	101
3	108	10:45	631.64	.25	1.58	1.58	355	162	133	9.0	322	330	100
4	112	10:49	634.85	.27	1.70	1.70	355	163	134	9.5	323	330	99
5	116	10:53	638.23	.30	1.90	1.90	355	164	134	10.5	326	330	99
6	120	10:57	641.73	.32	2.05	2.05	355	166	134	12.0	327	330	96
7	124	11:01	645.27	.32	2.05	2.05	355	167	135	12.0	327	330	96
8	128	11:05	648.910	.35	2.25	2.25	355	168	135	14.0	328	330	96
			LEAK	CHECK	END		1 MIN.		0.0	07			

ES-042

DRY MOLECULAR WEIGHT DETERMINATION

PLANT EPA / COORS
DATE JUNE 8, 1977
SAMPLING TIME (24-hr CLOCK) TEST 2
SAMPLING LOCATION OUTLET BAGHOUSE, BOILER 4
SAMPLE TYPE (BAG, INTEGRATED, CONTINUOUS) (SEE COMMENT)
ANALYTICAL METHOD ORSAT
AMBIENT TEMPERATURE LAB ~75°
OPERATOR [illegible]

COMMENTS:
LEAK IN SAMPLING CONDENSOR DELAYED START OF ORSAT ~ 25 MINUTES INTO TEST 2.

RUN / GAS	1		2		3		AVERAGE NET VOLUME	MULTIPLIER	MOLECULAR WEIGHT OF STACK GAS (DRY BASIS) M_d, lb/lb-mole
	ACTUAL READING	NET	ACTUAL READING	NET	ACTUAL READING	NET			
CO_2	14.4	14.4	14.2	14.2	14.2	14.2	14.2	44/100	
O_2 (NET IS ACTUAL O_2 READING MINUS ACTUAL CO_2 READING)	19.1	4.7	18.7	4.5	18.7	4.5	4.6	32/100	
CO (NET IS ACTUAL CO READING MINUS ACTUAL O_2 READING)								28/100	
N_2 (NET IS 100 MINUS ACTUAL CO READING)								28/100	
								TOTAL	

ES-043

Date 6/8/77

Observer [illegible]

Location

Name ADOLPH COORS COMPANY

Address GOLDEN, CO

Observation Point SAME AS 6/7/77

Stack - Distance From ____ Height ____

Wind - Speed 0-10 Direction EAST

Type of Installation BOILER

Fuel COAL FIRED

Observation began 0820 Ended CONTINUE NEXT PAGE

Density Smoke Tabulation

No. Units × Equiv. No. 1 Units

____ Units No. 0

____ Units No. ½

____ Units No. 1

____ Units No. 1½

____ Units No. 2

____ Units No. 2½

____ Units No. 3

____ Units No. 3½

____ Units No. 4

____ Units No. 4½

____ Units No. 5

____ Units ____ Equiv. Units

Equiv. Units / Units × 20% =

____ % Smoke Density

Remarks: BLUE SKY WHITE SMOKE

START PARTICULATE 08:50

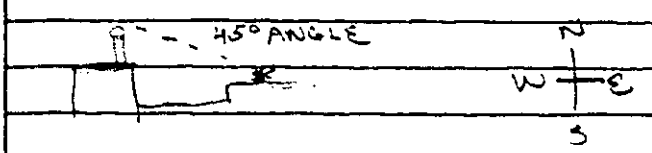

* OBSERVATION POINT

	0	15	30	45		0	15	30	45
0	0	0	0	N	30	N	0	10	10
1	N	N	N	N	31	0	0	N	N
2	0	0	10	0	32	N	N	0	0
3	0	N	0	N	33	0	0	N	N
4	N	N	N	N	34	N	N	N	N
5	N	N	0	0	35	N	N	N	N
6	0	0	0	N	36	N	N	N	0
7	0	N	N	0	37	0	N	N	N
8	N	N	N	N	38	N	N	N	N
9	N	N	N	N	39	N	N	N	0
10	N	N	N	N	40	0	0	N	N
11	N	N	N	0	41	N	N	N	N
12	N	N	N	0	42	N	N	N	N
13	0	N	0	0	43	0	10	0	0
14	N	N	N	0	44	0	N	0	N
15	0	0	0	0	45	N	N	N	N
16	N	N	N	N	46	N	10	0	0
17	N	N	N	N	47	0	0	N	N
18	0	0	0	0	48	N	N	N	N
19	N	N	N	N	49	N	0	0	0
20	N	N	N	N	50	N	N	N	N
21	0	10	0	0	51	N	N	N	N
22	0	0	N	N	52	N	0	10	0
23	N	N	N	N	53	0	0	N	N
24	0	0	0	N	54	N	N	N	N
25	N	N	0	N	55	N	N	0	10
26	0	N	N	N	56	10	0	0	0
27	N	0	10	0	57	0	0	N	N
28	0	0	0	N	58	N	N	N	N
29	N	N	N	N	59	N	N	N	N

Owner

Manager ____

Address ____

Date 6/8/77

Observer [illegible]

Location

Name ADOLPH COORS COMPANY

Address GOLDEN, CO

Observation Point SAME AS 6/7/77

Stack - Distance From ____ Height ____

Wind - Speed 0-10 Direction SE

Type of Installation BOILER

Fuel COAL FIRED

Observation began 0920 Ended CONTINUE NEXT PAGE

Density Smoke Tabulation

No. Units × Equiv. No. 1 Units

____ Units No. 0 ____

____ Units No. ½ ____

____ Units No. 1 ____

____ Units No. 1½ ____

____ Units No. 2 ____

____ Units No. 2½ ____

____ Units No. 3 ____

____ Units No. 3½ ____

____ Units No. 4 ____

____ Units No. 4½ ____

____ Units No. 5 ____

____ Units ____ Equiv. Units

Equiv. Units / Units × 20% =

____ % Smoke Density

Remarks: BLUE SKY WHITE SMOKE

	0	15	30	45		0	15	30	45
0	N	N	N	N	30	O	O	N	N
1	N	N	N	N	31	N	N	N	N
2	O	N	N	N	32	N	N	N	N
3	N	N	N	N	33	O	O	O	O
4	N	N	N	N	34	N	N	N	N
5	O	O	N	N	35	N	N	N	N
6	O	O	N	N	36	N	O	O	O
7	N	N	N	N	37	N	N	N	N
8	O	10	O	N	38	N	N	N	N
9	N	N	N	N	39	N	O	O	O
10	N	N	N	N	40	O	N	N	N
11	N	O	O	O	41	N	N	N	N
12	O	O	N	N	42	N	N	O	O
13	N	N	N	N	43	O	O	N	N
14	N	O	O	O	44	N	N	N	N
15	O	O	N	N	45	N	N	10	10
16	N	N	N	N	46	O	O	O	N
17	N	N	10	O	47	N	N	N	N
18	O	N	N	N	48	N	N	N	N
19	N	N	N	N	49	N	N	N	N
20	N	N	O	10	50	N	N	N	N
21	O	O	O	N	51	N	N	N	N
22	N	N	N	N	52	O	O	N	N
23	N	N	N	N	53	N	N	N	N
24	N	N	N	N	54	N	N	N	O
25	N	N	N	N	55	O	N	O	N
26	N	N	N	O	56	N	N	N	N
27	O	N	N	N	57	N	N	N	N
28	N	N	N	N	58	O	O	O	O
29	N	N	N	O	59	N	N	N	N

Owner

Manager ____

Address ____

Date 6/8/77

Observer [illegible]

Location

Name ADOLPH COORS COMPANY

Address GOLDEN, CO

Observation Point SAME AS 6/7/77

Stack - Distance From ____ Height ____

Wind - Speed [illegible] Direction SE

Type of Installation BOILER

Fuel COAL FIRED

Observation began 1020 Ended CONTINUE

Density Smoke Tabulation NEXT PAGE

No. Units × Equiv. No. 1 Units

____ Units No. 0

____ Units No. ½

____ Units No. 1

____ Units No. 1½

____ Units No. 2

____ Units No. 2½

____ Units No. 3

____ Units No. 3½

____ Units No. 4

____ Units No. 4½

____ Units No. 5

____ Units ____ Equiv. Units

Equiv. Units / Units × 20% =

____ % Smoke Density

Remarks: SKY BLUE WHITE SMOKE

* PARTICULATE TEST FINISHED

	0	15	30	45		0	15	30	45
0	N	N	N	O	30	N	O	O	N
1	O	O	O	N	31	N	N	N	N
2	O	N	N	N	32	N	O	10	O
3	N	N	N	N	33	O	O	N	N
4	N	O	O	O	34	N	N	N	N
5	O	O	O	O	35	N	O	10	O
6	O	N	N	N	36	O	O	O	O
7	N	O	O	O	37	O	N	N	N
8	O	N	N	N	38	N	N	N	N
9	N	N	N	N	39	N	N	N	N
10	N	N	O	O	40	N	N	N	N
11	O	O	O	O	41	N	N	O	O
12	O	N	N	N	42	O	N	N	N
13	N	N	N	N	43	N	N	N	N
14	N	N	N	N	44	N	N	O	O
15	N	N	N	N	45	O	O	N	O
16	N	N	O	O	46	O	N	N	N
17	O	O	N	N	47	O	N*	N	N
18	O	O	N	N	48	O	O	N	N
19	O	O	N	O	49	N	N	N	N
20	10	O	O	O	50	N	N	N	N
21	N	N	N	N	51	O	O	O	N
22	N	N	N	N	52	O	N	N	N
23	O	O	N	N	53	N	N	N	N
24	O	N	N	O	54	O	O	O	O
25	N	N	N	N	55	O	O	O	O
26	O	O	O	N	56	O	O	O	O
27	N	O	N	N	57	O	O	10	O
28	N	N	N	N	58	O	O	O	O
29	N	O	O	N	59	N	N	N	N

Owner

Manager ____

Address ____

Date 6/8/77

Observer [illegible]

Location

Name ADOLPH COORS COMPANY

Address GOLDEN, CO

Observation Point SAME AS 6/7/77

Stack - Distance From ____ Height ____

Wind - Speed 0-10 Direction SE

Type of Installation BOILER

Fuel COAL FIRED

Observation began 1120 Ended 1138

Density Smoke Tabulation

No. Units × Equiv. No. 1 Units

____ Units No. 0 ____

____ Units No. ½ ____

____ Units No. 1 ____

____ Units No. 1½ ____

____ Units No. 2 ____

____ Units No. 2½ ____

____ Units No. 3 ____

____ Units No. 3½ ____

____ Units No. 4 ____

____ Units No. 4½ ____

____ Units No. 5 ____

____ Units ____ Equiv. Units

Equiv. Units / Units × 20% =

____ % Smoke Density

Remarks: SKY BLUE WHITE SMOKE

	0	15	30	45		0	15	30	45
0	N	O	10	O	30				
1	O	O	O	O	31				
2	O	O	O	O	32				
3	O	O	N	N	33				
4	N	N	N	N	34				
5	N	N	N	N	35				
6	N	N	N	O	36				
7	O	O	N	O	37				
8	N	N	O	O	38				
9	O	O	O	O	39				
10	O	O	N	O	40				
11	O	O	N	N	41				
12	N	N	N	O	42				
13	O	O	O	O	43				
14	O	O	O	O	44				
15	O	N	N	N	45				
16	O	O	O	O	46				
17	O	O	O	O	47				
18	O	O	O	N	48				
19		FINISHED			49				
20	OPACITY TEST				50				
21					51				
22					52				
23					53				
24					54				
25					55				
26					56				
27					57				
28					58				
29					59				

Owner

Manager ____

Address ____

[redacted] 0.008 [redacted] Blowing soot [redacted]

13:59

FIELD DATA

QUALITY CONTROLLED YORK RESEARCH CORPORATION

IN STACK FILTER 14021
INSTACK RINSE WASH 14022
OUT STACK Filter 14023
Probe WASH 14024

PLANT Coors
DATE 6-8-77
SAMPLING LOCATION Boiler #4 BAGHOUSE
SAMPLE TYPE EPA method 17
RUN NUMBER Three
OPERATOR Paul + Louis
AMBIENT TEMPERATURE 110°
BAROMETRIC PRESSURE 24.91
STATIC PRESSURE, (P_s) 0.70
FILTER NUMBER (s) D 1147 | 47D10017
0.4621 | 0.1224

PROBE LENGTH AND TYPE 8'0" SS Instack filter
NOZZLE I.D. 0.300
ASSUMED MOISTURE, % 12
SAMPLE BOX NUMBER IRO-8
METER BOX NUMBER D-3
METER $\Delta H_@$ 1.95
C FACTOR 1.13
PROBE HEATER SETTING 115
HEATER BOX SETTING
REFERENCE Δp 0.295

Blowing soot
13:00 — 13:59

SCHEMATIC OF TRAVERSE POINT LAYOUT

READ AND RECORD ALL DATA EVERY 4 MINUTES

TRAVERSE POINT NUMBER	SAMPLING TIME, min	CLOCK TIME (24-hr CLOCK)	GAS METER READING (V_m), ft^3	VELOCITY HEAD (Δp_s), in. H_2O	ORIFICE PRESSURE DIFFERENTIAL (ΔH), in. H_2O DESIRED	ORIFICE PRESSURE DIFFERENTIAL (ΔH), in. H_2O ACTUAL	STACK TEMPERATURE (T_s), °F	DRY GAS METER TEMPERATURE INLET ($T_{m\ in}$), °F	DRY GAS METER TEMPERATURE OUTLET ($T_{m\ out}$), °F	PUMP VACUUM, in. Hg	SAMPLE BOX TEMPERATURE, °F		IMPINGER TEMPERATURE, °F
STAR	0	13:00	649.315										
D1	4	13:04	652.37	.25	1.60	1.60	355	118	116	6.0	322	285	111
2	8	13:08	655.55	.28	1.80	1.80	355	128	116	6.5	328	320	103
3	12	13:12	658.61	.25	1.60	1.60	355	134	117	6.0	334	330	96
4	16	13:16	661.69	.26	1.65	1.65	355	140	118	6.5	335	330	94
5	20	13:20	664.98	.30	1.90	1.90	355	145	120	7.0	338	330	93
6	24	13:24	668.26	.28	1.80	1.80	355	151	121	7.0	341	340	93
7	28	13:28	671.72	.34	2.17	2.17	355	155	122	8.0	315	340	92
8	32	13:32	675.168	.31	2.00	2.00	355	158	124	8.0	292	330	92
STAR	32	13:35	675.168										
C1	36	13:39	678.25	.26	1.65	1.65	355	150	126	7.5	316	318	108
2	40	13:43	681.45	.27	1.70	1.70	355	153	127	7.5	320	330	100
3	44	13:47	684.48	.23	1.45	1.45	355	158	128	7.0	317	335	99
4	48	13:51	687.46	.24	1.50	1.50	355	160	129	7.0	310	330	100
5	52	13:55	690.42	.24	1.50	1.50	355	162	130	7.0	320	335	100
6	56	13:59	693.70	.27	1.70	1.70	355	165	132	8.0	330	330	99
7	60	14:03	696.85	.26	1.65	1.65	355	167	133	8.0	322	330	98
8	64	14:07	700.113	.28	1.80	1.80	355	169	135	8.5	300	320	96
STAR	64	14:10	700.113										
B1	68	14:14	703.34	.28	1.80	1.80	355	161	134	8.5	324	315	100
2	72	14:18	706.77	.31	2.00	2.00	355	165	136	9.5	285	330	96
3	76	14:22	709.87	.23	1.45	1.45	355	166	136	8.0	300	330	96
4	80	14:26	712.92	.24	1.50	1.50	355	166	136	8.0	318	330	96
5	84	14:30	715.94	.24	1.50	1.50	355	167	136	8.5	326	330	96

COMMENTS

#1 579.6 | 702.7

#2 553.2 | 577.5

#3 450.5 | 461.1

#4 S.G. 824.1 | 867.1

ES-041

TRAVERSE POINT NUMBER	SAMPLING TIME, min	CLOCK TIME (24 hr CLOCK)	GAS METER READING (V_m), ft^3	VELOCITY HEAD (Δp_s), in. H_2O	ORIFICE PRESSURE DIFFERENTIAL (ΔH), in. H_2O DESIRED	ORIFICE PRESSURE DIFFERENTIAL (ΔH), in. H_2O ACTUAL	STACK TEMPERATURE (T_s), °F	DRY GAS METER TEMPERATURE INLET ($T_{m\ in}$), °F	DRY GAS METER TEMPERATURE OUTLET ($T_{m\ out}$), °F	PUMP VACUUM, in Hg	SAMPLE BOX TEMPERATURE, °F		IMPINGER TEMPERATURE, °F
6	88	14:34	719.21	.28	1.80	1.80	355	168	138	10.0	287	330	97
7	92	14:38	722.54	.29	1.85	1.85	355	169	138	10.0	315	325	96
8	96	14:42	725.938	.29	1.85	1.85	355	170	140	10.5	324	330	96
START	96	14:44	725.938										
1	100	14:48	729.25	.29	1.85	1.85	355	168	139	10.5	299	315	102
2	104	14:52	732.53	.24	1.50	1.50	355	168	139	10.0	316	320	102
3	108	14:56	735.82	.28	1.80	1.80	355	170	140	10.5	318	320	102
4	112	15:00	739.31	.31	2.00	2.00	355	171	140	12.0	321	320	101
5	116	15:04	742.76	.32	2.05	2.05	355	172	140	13.0	320	320	100
6	120	15:08	746.27	.32	2.05	2.05	355	172	140	13.0	289	300	100
7	124	15:12	749.90	.35	2.25	2.25	355	174	141	15.0	308	300	100
8	128	15:16	753.296	.29	1.85	1.85	355	173	141	14.0	322	300	99

Leak check end 1 min. 0.010

ES-042

DRY MOLECULAR WEIGHT DETERMINATION

PLANT EPA / COORS
DATE June 8, 77
SAMPLING TIME (24-hr CLOCK) TEST 3
SAMPLING LOCATION OUTLET BOILER 4 BAGHOUSE
SAMPLE TYPE (BAG, INTEGRATED, CONTINUOUS)
ANALYTICAL METHOD ORSAT
AMBIENT TEMPERATURE 75° Lab
OPERATOR

COMMENTS:

RUN / GAS	1		2		3		AVERAGE NET VOLUME	MULTIPLIER	MOLECULAR WEIGHT OF STACK GAS (DRY BASIS) M_d, lb/lb-mole
	ACTUAL READING	NET	ACTUAL READING	NET	ACTUAL READING	NET			
CO_2	14.0	14.0	13.9	13.9	14.0	14.0	14.0	44/100	
O_2 (NET IS ACTUAL O_2 READING MINUS ACTUAL CO_2 READING)	18.4	4.4	18.3	4.4	18.4	4.4	4.4	32/100	
CO (NET IS ACTUAL CO READING MINUS ACTUAL O_2 READING)	—		—		—			28/100	
N_2 (NET IS 100 MINUS ACTUAL CO READING)								28/100	
								TOTAL	

ES-043

Date 6/8/77

Observer [illegible]

Location

Name ADOLPH COORS COMPANY

Address GOLDEN, CO

Observation Point NORTH OF STACK

Stack - Distance From 25 Height 15

Wind - Speed 0-10 Direction SE

Type of Installation BOILER

Fuel COAL FIRED

Observation began 1230 Ended CONTINUE NEXT PAGE

Density Smoke Tabulation

No. Units × Equiv. No. 1 Units

Units No. 0

Units No. ½

Units No. 1

Units No. 1½

Units No. 2

Units No. 2½

Units No. 3

Units No. 3½

Units No. 4

Units No. 4½

Units No. 5

Units Equiv. Units

Equiv. Units / Units × 20% =

% Smoke Density W

Remarks:

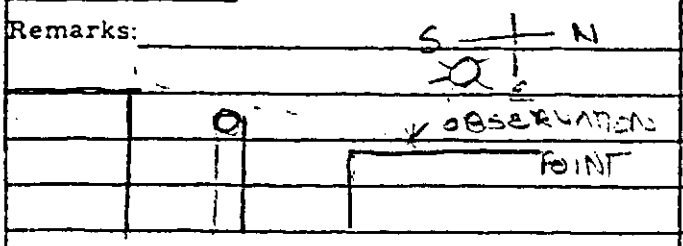

	0	15	30	45		0	15	30	45
0	N	N	N	N	30	N	N	N	N
1	N	N	N	N	31	N	O	O	O
2	N	O	O	N	32	O	O	O	N
3	N	N	N	N	33	N	N	N	N
4	N	N	N	N	34	N	N	N	N
5	N	N	O	N	35	N	N	N	N
6	N	N	N	N	36	N	N	N	N
7	N	N	N	N	37	N	N	N	O
8	N	N	N	N	38	N	N	N	N
9	N	N	N	N	39	N	N	N	N
10	N	N	N	N	40	N	N	N	O
11	N	N	O	O	41	N	N	N	N
12	O	N	N	N	42	N	N	N	N
13	N	N	N	N	43	N	N	N	N
14	N	N	N	N	44	O	O	N	N
15	N	N	N	N	45	N	N	N	N
16	N				46	N	N	N	N
17	TOLD STOP EPA		TO BY DENNIS		47	O	O	O	N
18					48	N	N	N	N
19					49	N	N	N	N
20		↑			50	O	O	O	N
21					51	N	N	N	N
22	MISSING DATA				52	N	N	N	N
23					53	N	N	N	N
24					54	N	N	N	N
25					55	N	N	N	N
26		↓			56	N	O	O	N
27			SAID TO CONTINUE		57	N	N	N	N
28					58	N	N	N	N
29	ROLL				59	N	N	N	N

PARTIALLY USE BUILDING AS BACKGROUND. PARTIALLY USE SKY. WHICH IS BLUE WHITE SMOKE

Owner

Manager

Address

Date 6/9/77

Observer [illegible]

Location

Name ADOLPH COORS COMPANY

Address GOLDEN, CO

Observation Point SAME

Stack - Distance From ____ Height ____

Wind - Speed 0-10 Direction SE

Type of Installation BOILER

Fuel COAL FIRED

Observation began 1330 Ended CONTINUE NEXT PAGE

Density Smoke Tabulation

No. Units × Equiv. No. 1 Units

Units No. 0 ____

Units No. ½ ____

Units No. 1 ____

Units No. 1½ ____

Units No. 2 ____

Units No. 2½ ____

Units No. 3 ____

Units No. 3½ ____

Units No. 4 ____

Units No. 4½ ____

Units No. 5 ____

Units ____ Equiv. Units ____

Equiv. Units / Units × 20% =

% Smoke Density

Remarks: BLUE SKY

*SKY PARTLY

CLOUDY WITH

WHITE AND DARK

CLOUDS

** CONTINUE QUESTIONS

WHITE SMOKE

	0	15	30	45		0	15	30	45
0	N	N	N	N	30	N	N	O	N
1	N	N	N	N	31	N	N	N	N
2	N	N	N	N	32	N	N	N	N
3	N	N	N	N	33	N	N	N	N
4	N	N	N	N	34	N	N	N	N
5	N	N	N	N	35	N	N	N	N
6	N	N	N	N	36	N	N	N	N
7	N	N	N	N	37	O	N	N	N
8	N	N	N	N	38	N	N	N	N
9	O	N	N	N	39	N	N	N	N
10	N	N	N	N	40	O	N	N	N
11	N	N	N	N	41	N	N	N	N
12	O	N	N	N	42	N	N	N	N
13	N	N	N	N	43	O	O	O	O
*14	N	N	N	N	44	N	N	N	N
15	O	O	N	N	45	N	N	N	N
16	N	N	N	N	46	N	O	O	N
17	N	N	N	N	47	N	N	N	N
18	N	O	O	O	48	N	N	N	N
19	N	N	N	N	49	N	N	N	N
20	N	N	N	N	50	N	N	N	N
21	N	O	O	N	51	N	N	N	N
22	N	N	N	N	52	N	N	N	N
23	N	N	N	N	53	N	N	N	N
24	N	N	N	N	54	N	N	N	N
**25	N	N	N	N	55	N	N	N	N
26	N	N	N	N	56	N	N	N	N
27	N	N	N	N	57	N	N	N	N
28	N	N	N	N	58	N	N	N	O
29	N	N	N	N	59	N	N	N	N

Owner

Manager ____

Address ____

Date 6/8/77

Observer [illegible]

Location

Name ADOLPH COORS COMPANY

Address GOLDEN, CO

Observation Point SAME

Stack - Distance From ____ Height ____

Wind - Speed 10-20 Direction WEST

Type of Installation BOILER

Fuel COAL FIRED

Observation began 1430 Ended CONTINUE NEXT PAGE

Density Smoke Tabulation

No. Units × Equiv. No. 1 Units

____ Units No. 0

____ Units No. ½

____ Units No. 1

____ Units No. 1½

____ Units No. 2

____ Units No. 2½

____ Units No. 3

____ Units No. 3½

____ Units No. 4

____ Units No. 4½

____ Units No. 5

____ Units ____ Equiv. Units

Equiv. Units / Units × 20% =

____ % Smoke Density

Remarks: CLOUDY DARK OVERCAST WHITE SMOKE * PARTICULATE TEST FINISHED

	0	15	30	45		0	15	30	45
0	N	N	N	N	30	N	N	N	N
1	N	N	N	N	31	N	N	N	N
2	O	O	N	N	32	N	N	N	N
3	N	N	N	N	33	N	N	N	N
4	N	N	N	N	34	N	N	N	N
5	O	O	N	N	35	N	N	N	N
6	N	N	N	N	36	N	O	N	O
7	N	N	N	N	37	N	N	N	N
8	O	O	N	N	38	N	N	N	N
9	N	N	N	N	39	N	N	N	N
10	N	N	N	N	40	N	N	N	N
11	N	O	O	N	41	N	N	N	N
12	N	N	N	N	42	N	N	N	N
13	N	N	N	N	43	N	N	N	N
14	N	N	N	N	44	N	N	N	N
15	N	N	N	N	45	N	N	N	N
16	N	N	N	N	46	N	N	N	N
17	N	N	N	N	47	N	N	N	N
18	N	N	N	N	48	N	N	N	N
19	N	N	N	N	49	N	N	N	N
20	N	O	O	N	50	N	N	N	N *
21	N	N	N	N	51	N	N	N	N
22	N	N	N	N	52	N	N	N	N
23	N	N	N	O	53	N	N	N	N
24	O	N	N	N	54	N	N	N	O
25	N	N	N	N	55	N	N	N	N
26	N	N	N	N	56	N	N	N	N
27	O	N	N	N	57	N	N	N	N
28	N	N	N	N	58	N	N	N	N
29	N	N	N	N	59	N	N	N	N

Owner

Manager ____

Address ____

Date 6/8/77

Observer for F. O[illegible]

Location

Name COORS

Address GOLDEN, CO

Observation Point SAME

Stack - Distance From ____ Height ____

Wind - Speed 10-25 Direction WEST

Type of Installation ____

Fuel ____

Observation began 1530 Ended 1550

Density Smoke Tabulation

No. Units × Equiv. No. 1 Units

____ Units No. 0 ____

____ Units No. ½ ____

____ Units No. 1 ____

____ Units No. 1½ ____

____ Units No. 2 ____

____ Units No. 2½ ____

____ Units No. 3 ____

____ Units No. 3½ ____

____ Units No. 4 ____

____ Units No. 4½ ____

____ Units No. 5 ____

____ Units ____ Equiv. Units

Equiv. Units / Units × 20% =

____ % Smoke Density

Remarks: OVERCAST WHITE CLOUDS WHITE SMOKE

	0	15	30	45		0	15	30	45
0	N	N	N	N	30				
1	N	O	N	N	31				
2	N	N	N	N	32				
3	N	N	N	N	33				
4	N	N	N	N	34				
5	N	N	N	N	35				
6	N	N	N	N	36				
7	N	N	N	N	37				
8	N	N	N	N	38				
9	N	N	N	N	39				
10	N	N	N	N	40				
11	N	N	N	N	41				
12	N	N	N	N	42				
13	N	N	O	O	43				
14	N	N	N	N	44				
15	N	N	N	N	45				
16	N	N	N	O	46				
17	N	N	N	N	47				
18	N	N	N	N	48				
19	N	N	N	O	49				
20	N	N	N	N	50				
21					51				
22					52				
23					53				
24					54				
25					55				
26					56				
27					57				
28					58				
29					59				

Owner

Manager ____

Address ____

PRELIMINARY VELOCITY TRAVERSE

PLANT COORS EPA TEST
DATE 6/6/77
LOCATION OUTLET OF BAGHOUSE, BOILER 4
STACK I.D. 7'x 10'
BAROMETRIC PRESSURE, in. Hg 24.69
STACK GAUGE PRESSURE, in. H_2O +0.70
OPERATORS Roger & Jim & Bill

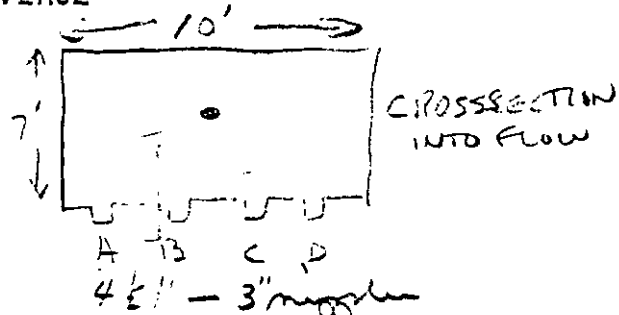

SCHEMATIC OF TRAVERSE POINT LAYOUT

1315

TRAVERSE POINT NUMBER	VELOCITY HEAD (Δp_s), in. H_2O	STACK TEMPERATURE (T_s), °F
A 1	0.33	335
2	0.26	335
3	0.34	340
4	0.36	340
5	0.37	340
6	0.35	345
7	0.38	345
8	0.37	345
B 1	0.32	335
2	0.26	340
3	0.25	340
4	0.21	340
5	0.20	345
6	0.22	345
7	0.30	345
8	0.30	345
AVERAGE	~.3	340

1517 recheck w/o SO2 minutes
0.34/335
0.37/335
0.33/340
0.36/345
0.37/345
0.35/350
0.39/345
0.38/350
0.27/330
0.31/330
0.31/335
0.26/340
0.26/340
0.25/345
0.30/345
0.29/345

(SO2 monitor)

TRAVERSE POINT NUMBER	VELOCITY HEAD (Δp_s), in. H_2O	STACK TEMPERATURE (T_s), °F
C 1	0.32	330
2	0.27	335
3	0.27	340
4	0.28	345
5	0.29	345
6	0.27	345
7	0.29	350
8	0.30	350
D 1	0.31	340
2	0.26	345
3	0.27	340
4	0.30	345
5	0.31	345
6	0.40	350
7	0.33	350
8	0.37	350
AVERAGE	~.03	345

ES-045

NOMOGRAPH DATA

PLANT EPA/ COORS

DATE 6/6/77

SAMPLING LOCATION OUTLET BAG, UNIT 4

CALIBRATED PRESSURE DIFFERENTIAL ACROSS ORIFICE, in. H_2O	$\Delta H_@$	1.96
AVERAGE METER TEMPERATURE (AMBIENT + 20 °F), °F 95	$T_{m_{avg.}}$	130
PERCENT MOISTURE IN GAS STREAM BY VOLUME	B_{wo}	10%
BAROMETRIC PRESSURE AT METER, in. Hg P_b	P_m	24.55
STATIC PRESSURE IN STACK, in. Hg ($P_m \pm 0.073$ x STACK GAUGE PRESSURE in in. H_2O)	P_s	24.74
RATIO OF STATIC PRESSURE TO METER PRESSURE	P_s/P_m	0.995 → 0.99
AVERAGE STACK TEMPERATURE, °F	$T_{s_{avg.}}$	345
AVERAGE VELOCITY HEAD, in. H_2O	$\Delta p_{avg.}$	0.3
MAXIMUM VELOCITY HEAD, in. H_2O	$\Delta p_{max.}$	0.4
C FACTOR $[1.07]\frac{(0.375)^2}{(0.85)^2}$	1.13	
CALCULATED NOZZLE DIAMETER, in.	0.3	
ACTUAL NOZZLE DIAMETER, in.	0.300	
REFERENCE Δp, in. H_2O	0.295	

QUALITY CONTROLLED YORK RESEARCH CORPORATION

CHAIN OF CUSTODY RECORD
YORK RESEARCH CORPORATION

Project No. 7-8479-33

Client/Plant EPA / COORS

Project Director ROGER JOHNSON

Samples taken: 6-7-77, 6-8-77 (Date) PAUL WADE PARK, BILL CESAREO (Operator) 11 SAMPLES / 11 CONTAINERS (Total Number)

Sample ID	Sample Type	Test Location	No. of Samples	Sample Obtained By	Date of Sample	Rec'd By	Date	Reason	Rec'd By	Date	Reason
S-77-001-908	TEST 1 EPA (DUR) 215	INSTACK FILTER	1	YRC	6/7/77						
S-77-001-909	TEST 1 EPA (DUR) 215	INSTACK ACET. WASH	1	YRC	6/7/77						
S-77-001-910	TEST 1 EPA (DUR) 215	OUT OF STACK FILTER	1	YRC	6/7/77						
S-77-001-911	TEST 1 EPA (DUR) 215	OUT OF STACK PROPEW WASH	1	YRC	6/7/77						
S-77-001-912	TEST 1 EPA (DUR) 215	ACETONE BLANK	1	YRC	6/7/77						
S-77-002-073	TEST 1 EPA (DUR) 215	COAL SAMPLE	2 CONTAINERS	YRC	6/7/77						
S-77-001-913	TEST 2 EPA (DUR) 215	INSTACK FILTER	1	YRC	6/8/77						
S-77-001-918	TEST 2 EPA (DUR) 215	INSTACK ACET WASH	1	YRC	6/8/77						
S-77-001-919	TEST 2 EPA (DUR) 215	OUT OF STACK FILTER	1	YRC	6/8/77						
S-77-001-920	TEST 2 EPA (DUR) 215	OUT OF STACK WASH ACET	1	YRC	6/8/77						
S-77-002-074	TEST 2 EPA (DUR) 215	COAL SAMPLE	1	YRC	6/8/77						

CHAIN OF CUSTODY RECORD
YORK RESEARCH CORPORATION

Project No. 7-8479-33

Client/Plant EPA/COORS

Project Director ROGER JOHNSON

Samples taken: 6/8/77 (Date) PAUL WADE - PARTICULATE; BILL GESARCO, COAL (Operator) Total Number

Sample ID	Sample Type	Test Location	No. of Samples	Sample Obtained By	Date of Sample	Rec'd By	Date	Reason	Rec'd By	Date	Reason
S-77-001-921	TEST 3 EPA (DUR) 215	IN STACK FILTER	1	YRC	6/8/77						
S-77-001-922	TEST 3 EPA (DUR) 215	IN STACK ACETONE WASH	1	YRC	6/8/77						
S-77-001-923	TEST 3 EPA (DUR) 215	HTR BOX FILTER	1	YRC	6/8/77						
S-77-001-924	TEST 3 EPA (DUR) 215	PROBE WASH	1	YRC	6/8/77						
S-77-002-075	TEST 3 EPA (DUR) 215	COAL SAMPLE	1	YRC	6/8/77						

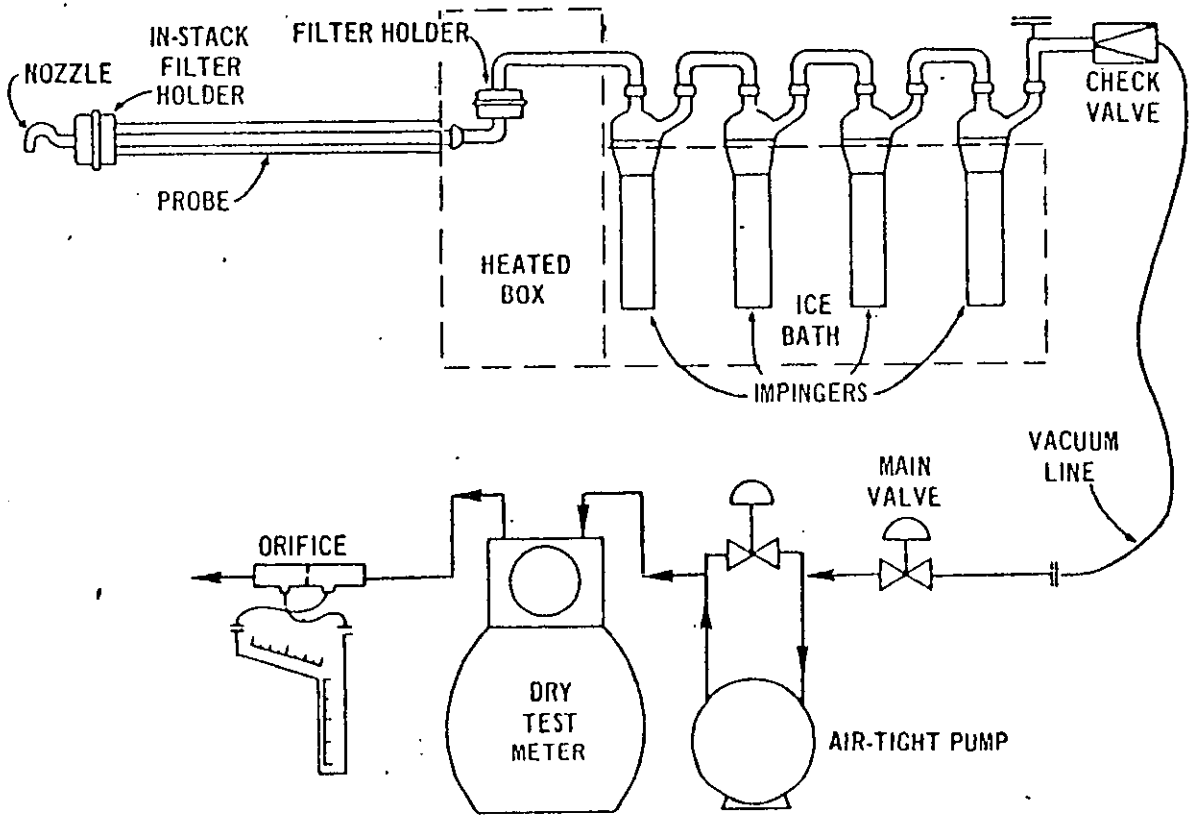

Figure 1. In-stack particulate sampling train.

E. LAB RESULTS

LABORATORY RESULTS

Project No. 7-8479-33 Date Received _____

Client/Plant EPA / COORS Date Reported _____

Sample ID	Sample Type	Test Location	Test No.	Method	Results (units)
14011	FILTER	OUT BAG	1	EPA 17	72.5 mg
14012	INSTACK WASH	OUT BAG	1	EPA 17	22.3 mg
14013	Probe WASH	OUT BAG	1	EPA 5	2.5 mg
14014	HTR BOX FILTER	OUT BAG	1	EPA 5	1.9 mg
14015	BLANK ACETONE		1	EPA 5/17	2.3 mg
14016	INSTACK FILTER	OUT Bag	2	EPA 17	60.1 mg
14017	INSTACK WASH	out Bag house	2	EPA 17	9.8 mg
14018	HTR BOX FILTER	out Bag house	2	EPA 5	[illegible] mg
14019	PROBE WASH	out Bag house	2	EPA 5	20.1 mg
14021	INSTACK FILTER	OUT BAG	3	EPA 17	82.[illegible] mg
14022	INSTACK WASH ACETONE	OUT BAG	3	EPA 17	27.3 mg
14023	HTR BOX FILTER	OUT BAG	3	EPA 5	[illegible] mg
14024	PROBE WASH	OUT BAG	3	EPA 5	9.3 mg

ALICE ASHWOOD

Signature of Analyst

QUALITY CONTROLLED YORK RESEARCH CORPORATION

Environmental Consultants

July 11, 1977

Mr. Roger Johnson
York Research Corporation
7100 Broadway
Building 3A
Denver, Colorado 80221

Re: Analyses results for 7-8479-33

Dear Roger:

On the attached sheets are copies of laboratory results for samples received for YRC Job No. 7-8479-33. The raw data sheets will be retained in our files for reference if you have any questions.

As requested, the coal samples were forwarded to the specified EPA address.

Sincerely,

Bob Kearton

Bob Kearton

York Research Corporation
One Research Drive, Stamford, Connecticut 06906 • Telephone: (203) 325-1371 • TWX: 710-474-3947

PROXIMATE AND ULTIMATE
ANALYSIS ON SOLID FUEL

Job Number: 7-8479-33 Date: 7/8/77

Sample I.D.#	14001 14002	14003	14004	
Moisture - Surface				
Moisture - Intrinsic				
Moisture - Total	18.33	16.40	17.58	
BTU/lb. (Dry)	11,058	10,771	11,290	
BTU/lb. (as received)	9,031	9,005	9,305	
% Volatile Carbon (Dry)	37.40	41.54	49.90	
% Volatile Carbon (as received)	30.54	34.73	41.13	
% Ash (Dry)	11.76	10.78	8.10	
% Ash (as received)	9.60	9.01	6.68	
% Fixed Carbon (Dry)	50.84	47.68	42.00	
% Fixed Carbon (as received)	41.52	39.86	34.62	
% Sulfur (Dry)	0.57	0.54	0.47	
% Sulfur (as received)	0.47	0.45	0.39	
% Nitrogen (Dry)	1.46	1.45	1.45	
% Nitrogen (as received)	1.19	1.21	1.20	
% Carbon (Dry)	64.00	62.96	65.02	
% Carbon (as received)	52.27	52.63	53.59	
% Hydrogen (Dry)	4.32	4.69	4.56	
% Hydrogen (as received)	3.64	4.03	3.87	
% Oxygen (Dry)	17.89	19.58	20.40	
% Oxygen (as received)	15.50	17.26	17.70	

Comments:

Analyst: A. Gale

Approved By: RSK

YORK RESEARCH CORPORATION

FORM #L-002

(1)

ANALYSIS REPORT

Project Number 7-8479-33

Client EPA / Coors

Date July 11. 1977

Report to

Job Number Results of Analysis of filters and Acetone Washes residues. Results in milligrams per sample

Sample Number	60674 BL	14011 F	14012 W	14014 F	14013 W
Sodium	1.650	0.750	0.135	2.775	0.110
Potassium	0.053	0.375	0.035	0.058	0.028
Magnesium	0.094	4.160	0.563	0.206	0.050
Iron	0.030	4.190	0.730	0.043	0.213
Titanium	None	0.230	None	0.025	None
Copper	None	0.008	0.034	None	0.009
	None	0.88	0.30	0.25	0.09

F - Filter

W - Acetone Wash

Analysis Performed By Gregory Pautchem

YORK RESEARCH CORPORATION

FORM #L-002

(2)

ANALYSIS REPORT

Project Number 7-8479-33

Client EPA / COORS

Date July 11, 1977

Report to

Job Number Analysis of filters and Acetone Washes
Results in milligrams per sample

Sample No.		60673 F	14015 W	14016 F	14017 W
Sodium		0.258	0.068	0.775	0.093
Potassium		0.048	0.018	0.375	0.025
Magnesium		0.094	0.050	2.690	0.294
Iron		0.031	0.044	3.810	0.356
Titanium		0.025	None	0.275	0.038
Copper		0.003	None	0.008	0.015
S		0.17	0.08	0.86	0.09

Analysis Performed By Gregory Patchen

YORK RESEARCH CORPORATION

FORM #L-002

(3)

ANALYSIS REPORT

Project Number 7-8479-33

Client EPA / Coors

Date July 11, 1977

Report to

Analysis of filters and acetone washes residues

~~Job Number~~ Results in milligrams per ~~filter~~ sample

Sample No		14018 F	14019 W	14021 F	14022 W
Sodium		2.625	0.155	0.950	0.165
Potassium		0.080	0.043	0.450	0.060
Magnesium		0.156	0.213	3.313	0.463
Iron		0.056	0.525	5.000	2.940
Titanium		None	0.038	0.338	None
Copper		None	0.014	0.010	0.023
		0.40	0.31	1.27	0.31

Analysis Performed By Gregory Gustafson

YORK RESEARCH CORPORATION

FORM #L-002

(4)

ANALYSIS REPORT

Project Number 7-8479-33

Client EPA / Coors

Date July 11, 1977

Report to

Job Number Analysis of filters and acetone washes residues
Results in milligrams per sample

Sample No		14023 F	14024 W		
Sodium		2.175	0.078		
Potassium		0.065	0.025		
Magnesium		0.106	0.063		
Iron		0.069	0.200		
Titanium		None	None		
Copper		0.005	0.004		
Sulfates		0.23	0.14		

Analysis Performed By Gregory Pantelen

F. CALIBRATION DATA

DRY GAS METER CALIBRATION

DATE: 3-14-77

METER NUMBER 690101
Meter Box D3

Flow Rate	CF_W	T_W	CF_D	T_D	Y
.10 CFM	2		100.8		
.5 CFM	5		100.7		
1.1 CFM	10		100.9		

$$Y = \frac{CF_W\ (T_D + 460)}{CF_D\ (T_W + 460)}$$

Tolerance Y = .99 - 1.01 Ideal 1.00

Primary Standard: Bell Prover

Rockwell Representative: R.F. Bleich

ORIFICE AND DRY GAS METER

CALIBRATION SHEET

		Man.	H@
$\Delta H_@ = \dfrac{0.0317 \text{ (Man. Orifice)}}{P_b\ (OT_d + 460)} \left(\dfrac{(T_w + 460)t}{CF_w} \right)^2$			
$\Delta H_@ = \dfrac{0.01585}{24.30(\frac{76}{536} + 460)} \left(\dfrac{10(\frac{76}{536} + 460)}{4.375} \right)^2$		.5	1.83
$\Delta H_@ = \dfrac{0.0317}{24.30(\frac{86}{546} + 460)} \left(\dfrac{(\frac{86}{546} + 460)10}{6.15} \right)^2$		1.0	1.88
$\Delta H_@ = \dfrac{0.0634}{24.30(\frac{97}{557} + 460)} \left(\dfrac{10(\frac{97}{557} + 460)}{8.605} \right)^2$		2.0	1.96

Calibration Calculations Meter and Pump Box

Date 3/17/77 Box No. D-3

	Man.	Y
$Y = \dfrac{CF_w\ P_b\ (T_d \text{ avg.} + 460)}{CF_d\ P_b + \dfrac{\text{Man. Orifice}}{13.6}\ (T_w + 460)}$		
$Y = \dfrac{\_\_\_ \times \_\_\_ (\_\_\_ + 460)}{\_\_\_ (\_\_\_ + 0.0368)(\_\_\_ + 460)}$	.5	
$Y = \dfrac{\_\_\_ \times \_\_\_ (\_\_\_ + 460)}{\_\_\_ (\_\_\_ + 0.0737)(\_\_\_ + 460)}$	1.0	
$Y = \dfrac{\_\_\_ \times \_\_\_ (\_\_\_ + 460)}{\_\_\_ (\_\_\_ + 0.147)(\_\_\_ + 460)}$	2.0	

R. Woolick

York Research Corporation

Pitot Tube Calibration

	ΔP_{std}	ΔP_s	$\frac{\Delta P_{std}}{\Delta P_s}$	F_s
A	0.65	0.84	.773	.8796
A	0.65	0.84	.773	.8796
A	0.65	0.84	.773	.8796
B	0.64	0.83	.771	.8781
B	0.64	0.84	.762	.8728
B	0.62	0.84	.738	.8591

$$F_s = \sqrt{\frac{\Delta P_{std}}{\Delta P_s}}$$

$(\Sigma F_s)_A = 2.6388$

$(\Sigma F_s)_B = 2.6100$

Pitot Tube # Coors, EPA

F_s = .875

$$\frac{(\Sigma F_s)_A}{3} = .8796$$

F_{std} = 1.00

$$\frac{(\Sigma F_s)_B}{3} = .8700$$

Calibrated by [illegible]

Date 6/6/77

Minimite used to measure stack temps.
Y3-103

Temperature Sensor

Job No. 7-8479-33
COORS

	Standard Temp. (Thermometer) °F	Test Temp. (Thermocouple) °F	Difference °F
Boiling H_2O	203°F	210°F	+7
Ambient Air	77°F	78°F	+1
Oven	152°C 305.6°F	337°F	+ 31.4
Boiling Oil	196°C 384°F	415	+ 31

Calibration checked by PAUL

Date 6/9/77

P_b 24.75
from [illegible], 20 boils at 202°F

Minimite used to measure filter temps,
3A-103

Temperature Sensor

Job No. 7-8479-33
COORS

	Standard Temp. (Thermometer) °F	Test Temp. (Thermocouple) °F	Difference °F
Boiling H_2O	202°F	207°F	+5
Ambient Air	77°F	78°F	+1
Oven	152°C 305.6 °F	335°F	+29.4
Boiling Oil	196°C 384. °F	408°F	+24

Calibration checked by PAUL

Date 6/9/77

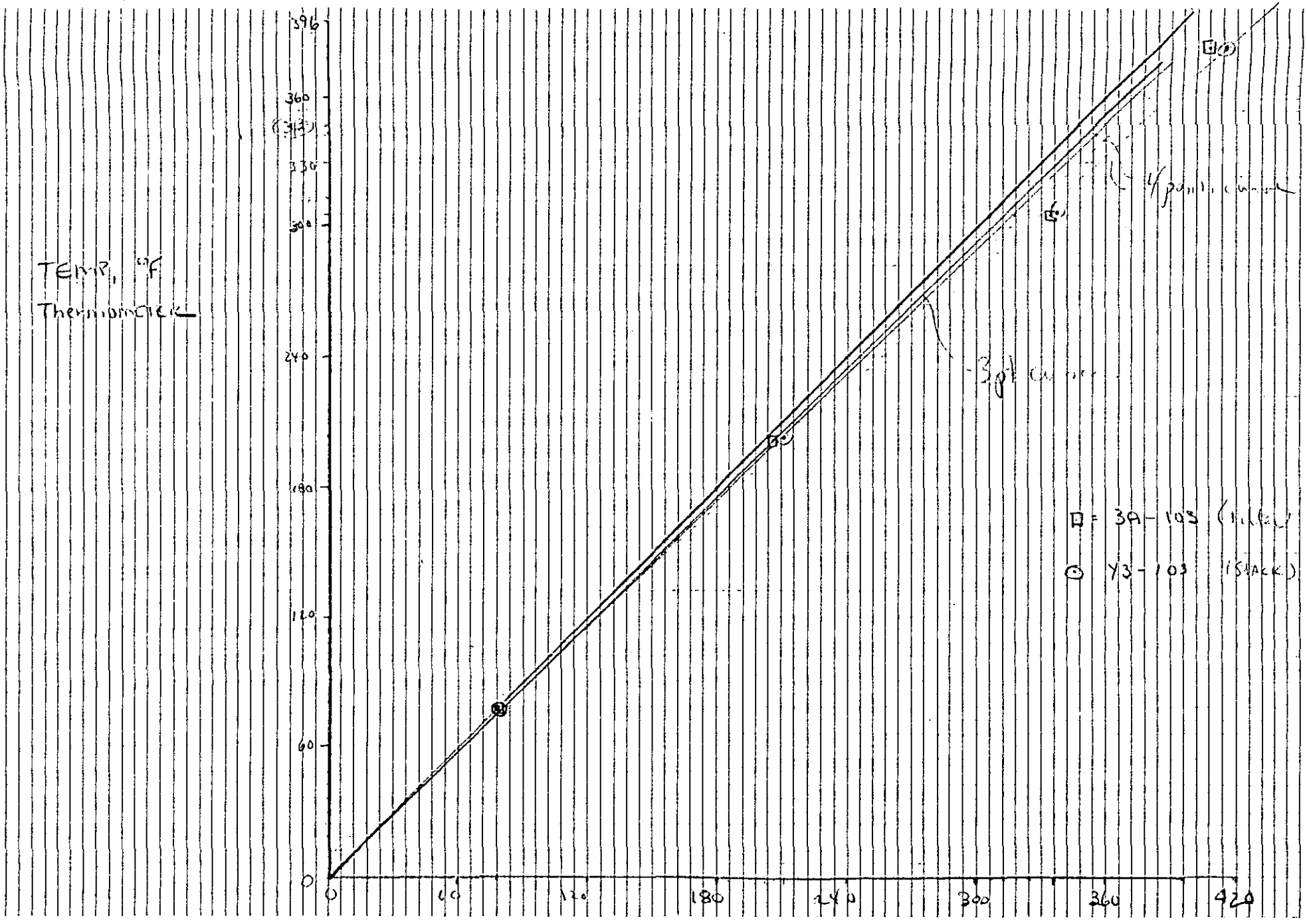

TEMP, °F
MINIMITE

THE MEAD CORPORATION, DAYTON, O. 45402
ACCURACY QUADRILLE No. 58-1410

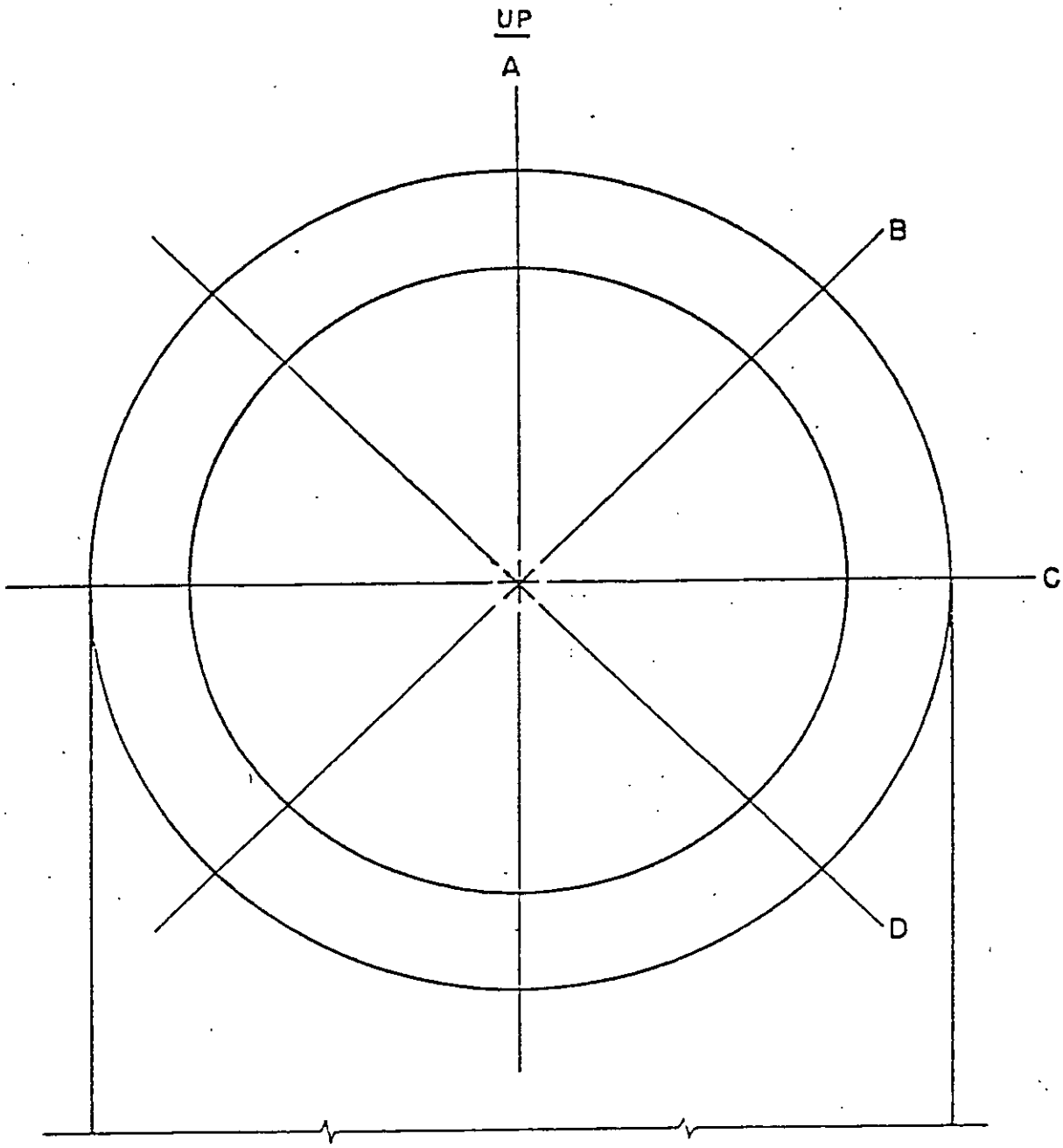

A 0.300 B 0.301

C 0.300 D 0.300

NOZZLE MEASURMENT