Note: This is a reference cited in *AP 42, Compilation of Air Pollutant Emission Factors, Volume I Stationary Point and Area Sources.* AP42 is located on the EPA web site at www.epa.gov/ttn/chief/ap42/

The file name refers to the reference number, the AP42 chapter and section. The file name "ref02_c01s02.pdf" would mean the reference is from AP42 chapter 1 section 2. The reference may be from a previous version of the section and no longer cited. The primary source should always be checked.

Background Report Reference

AP-42 Section Number: 9.7

Background Chapter: 2

Reference Number: 13

Title: Series Cyclone Arrangements to Reduce Gin Emissions

E.P. Columbus

1993

TRANSACTIONS OF ASAE 36(2) 545-550

AP-42 Section 9.7
Reference —
Report Sect. 2
Reference 13

SERIES CYCLONE ARRANGEMENTS TO REDUCE GIN EMISSIONS[1]

by
Eugene P. Columbus[2]

Abstract

The efficiency of several cyclone arrangements in removing dust particles less than 10 microns was evaluated over a two-year period using cyclones installed in a small-scale ginning system at the Cotton Ginning Laboratory, Stoneville, Mississippi. A 2D2D, 1D3D, and a large diameter (LD) cyclone were used in the experiment. The efficiencies of the 2D2D and the 1D3D cyclones were similar when used as primary collectors. In the first year both the LD+1D3D and 2D2D+1D3D arrangements of cyclones were equally effective in reducing total and PM 10 particulate emissions. However, in the second year the 2D2D+1D3D cyclone combination reduced total emissions by 28.9% and PM 10 emissions by 31.5% over the LD+1D3D combination. The 2D2D+1D3D combination had the highest pressure drop of all the treatments, but a better reduction of particulate emissions. Therefore, the 2D2D+1D3D system was the most efficient configuration of those tested.

Introduction

Cyclones have effectively removed particulates from the exhausts of cotton gins for many years. The first designs were the "large diameter" (LD) types (Figure 1). In the early 1950s, the more efficient small diameter cyclones, now commonly called 2D2D cyclones, were introduced to the ginning industry (Figure 2). The 2D2D refers to the dimensions of the body and cone of the cyclone which are multiples of the diameter (D), thus the cyclone body and cone lengths are twice the diameter. Increased emphasis on pollution abatement stimulated research at the USDA Ginning Laboratories to evaluate and determine operating parameters for the 2D2D cyclones (Griffin and Columbus, 1981).

Baker and Stedronsky (1967) found that trash input rates and inlet velocities influenced the operational characteristics of 2D2D cyclones. This test revealed that the overall collection efficiency of the cyclone used for trash and dust separation was 99.9%. The effect of particle size distribution on collection efficiency was not evaluated. An experiment conducted by Wesley, et al. (1970), revealed collection efficiencies for two types of 2D2D cyclones used for trash and dust separation were in excess of 99.5%. One of the cyclones was a half-sized body, 2D2D that utilized an involute entrance; however, both cyclones had equal inlet and exit areas. The standard 2D2D cyclone had a slightly higher collection efficiency, but both efficiencies were in excess of 99.5%. The normal 2D2D cyclone also collected virtually 100% of the particles greater than 24 microns, whereas

[1]To be published in Transaction of ASAE.
[2]Agricultural Engineer, U.S. Cotton Ginning Laboratory, ARS, USDA, Stoneville, MS.

the other cyclone collected basically 100% of the particles greater than 28 microns in diameter. A more intensive study by Wesley, et al. (1972) revealed that the 2D2D cyclone collected virtually 100% of particles greater than 20 microns at the optimum inlet velocity of 15.24 m/s (3000 ft/min).

Parnell and Davis (1979) using grain dust, reported a reduction in particulate emissions associated with the use of a "long-cone" (1D3D) cyclone (Figure 3) over the conventional 2D2D cyclone. The 1D3D cyclone has a body length equal to the diameter and a cone length equal to three diameters. The 1D3D cyclone's inlet is long and narrow compared to the 2D2D cyclone inlet. They also reported on a design model that allows for the prediction of emission concentrations from various single cyclones as well as cyclones in series. A computer-aided cyclone design model was evaluated by Parnell, et al. (1982) and results indicated emission concentrations from various cyclones were highly dependent upon particulate loading rates. This model was also used to evaluate the 2D2D and an experimental 1D4D cyclone. All testing was performed using grain dust with a mass median diameter of 12 to 15 microns.

Gillum, et al. (1982) tested two types of cyclones (2D2D and 1D3D) used as secondary cleaners on exhausts of the primary 2D2D cyclone. They found an increase in collection efficiency when using series cyclones but a substantial increase in the gin's power requirement was needed to overcome the increased pressure drop across both cyclones. Gillum and Hughs (1983) determined that series cyclones could be operated at lower than normal inlet velocities with a subsequent reduction in pressure drop across both cyclones.

The U.S. Environmental Protection Agency (EPA) regulates ambient air quality. Prior to 1987 the EPA regulated total suspended particulate matter or TSP; however, on July 1, 1987, the EPA announced their final decision to change the ambient-air quality standards to limit particles with an aerodynamic diameter less than or equal to 10 microns which are commonly called PM 10 particles (Federal Register, 1987).

Columbus and Anthony (1990) reported on a preliminary study that used series cyclones to improve collection efficiency of both TSP and PM 10 dust particles. They found that the combined efficiencies for both TSP and PM 10 emissions of any two types of cyclones (LD, 2D2D or 1D3D) were greater than those for just one cyclone. Emission concentrations from the 2D2D+1D3D combination was not significantly different at the 95% level from the LD+1D3D combination in reducing PM 10 emissions.

All the studies referenced above except Columbus and Anthony (1990) used grain dust, gin trash or particulates previously separated from an air stream by a cyclone. The particulates were

then "spiked" into an air stream and removed by the respective test setups. The study reported herein fed seed cotton with its inherent particulate load into an air stream, separated the seed cotton from the conveying air by means of a separator and then introduced that air with its particulate load into the cyclone setup. Thus, the particulates were not subjected to pre-separation by other cyclones and the particle size distribution (PSD) should be representative of the particular cotton used. This made the test more similar to actual field conditions than previous research for separator exhausts.

The objectives of the two-year study reported herein were to evaluate the use of sequential cyclone arrangements to increase collection efficiency of gin particulates with specific emphasis on particles smaller than 10 microns.

Procedures

A small-scale ginning system at the USDA Ginning Laboratory, Stoneville, Mississippi, was utilized in 1990 and 1991 for this research. In this system, a No. 35 centrifugal fan turning at 2500 r/min and powered by a 30 hp motor was used to pick up seed cotton from the feed control and convey it to the first separator. The air, 0.85 m^3/s (1800 cfm) and emissions from this separator were ducted into the cyclone system as shown in Figure 4. It should be noted here that the exhaust from the separator probably contains more fine dust than some of the other gin exhausts such as the trash fan from the seed cotton cleaners. The cyclones were constructed in the Ginning Lab.'s sheet metal shop and the LD cyclone was 116.8 cm (46 in), the 2D2D cyclone was 66.0 cm (26 in) and the 1D3D cyclone was 63.5 cm (25 in) in diameter. In 1990, the four cyclone treatments were:

1. 2D2D
2. LD+2D2D
3. LD+1D3D
4. 2D2D+1D3D.

In 1991 there were five cyclone treatments:

1. 2D2D
2. 1D3D
3. LD+2D2D
4. LD+1D3D
5. 2D2D+1D3D.

Modified high-volume samplers were used to sample the dust laden air at three locations as shown in Figure 4. These sampling points remained fixed regardless of the type cyclones being tested. All sampling was performed isokinetically by matching the velocity of the conveying air with the air velocity entering the sampling probe. This was accomplished by manually adjusting the voltage supply to the air sampler motor. Air flow entering the sampling probe was monitored by a flow meter and

converted to velocity so that both the velocity in the conveying duct and the sampling probe could be equilibrated. During the test, temperature, relative humidity and barometric pressure, sampling time and sampling flow rate were recorded so that flow rates could be corrected to 21°C, 50% RH, and 101.33 kPa. The filters used to capture the dust were a polyweb media manufactured by the James River Corporation*. These filters were weighed to the nearest 0.0001 g before and after sampling. The dust captured on the filters was analyzed for particle size distribution (PSD) using a Coulter Counter as described by Herber and Parnell (1988).

Statistical comparisons were made at the 5% and 1% levels of probability, and Duncan's Multiple Range Test (DMRT) was used to separate treatment means. Data from both years of the study were combined and analyzed using Procedure General Linear Model (PROC GLM) (SAS, 1989); however, the interaction of treatment and years was significant for several of the dependent variables. Therefore, the studies are reported by years.

Results

Processing rate for the 1990 experiment ranged from 0.050 to 0.063 kg/s (6.65 to 8.35 lb/min) and was not significantly different at the 95% level for the four treatments. In the 1991 study, the seed cotton was not ginned but rather returned via the overflow to storage and thus the processing rate ranged from 0.068 to 0.083 kg/s (9.1 to 11.1 lb/min) which was faster than the 1990 study. Using these processing rates and the air flow rate mentioned in the "Procedures" section, the air to seed cotton ratio was about 10 to 17 m^3/kg (160 to 270 ft^3/lb) which is 8 to 13 times higher than that found in most commercial gins. This high air to seed cotton ratio probably accounts for the small emission concentrations reported as compared to that in some of the referenced studies. Sampling time averaged about 20 minutes for the 1990 study and about 16 minutes for the 1991 study. For both years, neither seed cotton moisture nor foreign matter were significantly different for the cyclone treatments. Each year, the cotton for the experiment was spindle harvested on the same day from the same field and was the same variety (DES 119).

Velocity and pressure drop

Average inlet velocity and pressure drop across the cyclones are shown in Table 1. In 1990 the velocity for the 2D2D cyclone was lower than the recommended 15.24 m/s (3,000 ft/min) for Treatments 2 and 4 but was higher for Treatment 1; also, the velocity for the 1D3D cyclone was lower for both treatments than the 16.26 m/s (3,200 ft/min) used by Gillum and Hughs (1983).

---

*Mention of a trade name, proprietary product, or specific equipment does not constitute a guarantee or warranty by the U.S. Department of Agriculture and does not imply approval of the product to the exclusion of others that may be available.

Pressure drop ranged from 1.07 to 2.43 kPa (4.3 to 9.8 in) for the 2D2D cyclone and 2D2D+1D3D combination, respectively, during the 1990 study. The velocities for the 1991 study for the 2D2D cyclone were very near the recommended 15.24 m/s (3,000 ft/min) for Treatments 1, 3, and 5. Velocities for the 1D3D cyclone were also very near the recommended 16.26 m/s (3,200 ft/min) for Treatments 2, 4, and 5. Pressure drops for the treatments during the 1991 study ranged from 1.32 to 2.56 kPa (5.3 to 10.3 in) for the 2D2D cyclone and 2D2D+1D3D combinations, respectively.

Emissions data

1990 Study

The emissions data in Table 2 are divided into three sections: 1) Before cyclones, 2) after one cyclone, and 3) after two cyclones. PM 10 dust percentage and the mass median diameter as determined by the Coulter Counter were not the same for each treatment prior to the cyclone treatment sequences. However, the PM 10 and total dust concentrations were not significantly different for the four treatments. After the emissions had passed through one cyclone, the percent of PM 10 dust entering the second cyclone increased greatly. The percentage of PM 10 dust on the filters increased with the emissions from the 2D2D cyclone having a larger percentage of particles less than 10 microns. This was due to the effect of the first cyclone removing a large portion of the larger particles and the smaller particles passing through to the second cyclone. The mass median diameter of the particles emitted from the 2D2D cyclone were 5.0 and 5.3 microns compared to 6.3 and 6.4 for the particles emitted from the LD cyclone.

The total concentration data were quite erratic; thus, only one of the treatments showed a significant difference. The PM 10 concentration (product of total concentration and percentage PM 10 dust) emitted by the 2D2D cyclone was lower than that emitted by the LD cyclone. Emissions data after two cyclones indicated no differences in treatment means for mass median diameter. The emissions from the 2D2D cyclone contained a higher percentage of PM 10 dust which is a result of better collection efficiency than the LD cyclone and smaller mass median diameter. Total concentration mean for the 2D2D+1D3D treatment was lower than the LD+2D2D but not lower than the LD+1D3D treatment. The lowest PM 10 concentration mean was the result of the 2D2D+1D3D treatment.

1991 Study

Table 3 contains the emissions data for the 1991 study and is structured like Table 2. PM 10 dust percentage and the mass median diameter as determined by the Coulter Counter and the total dust concentration were not the same for each treatment prior to the cyclone treatment sequences. However, the PM 10 dust concentrations were not significantly different for the five treatments. As in the 1990 study, after the emissions had

passed through one cyclone, the data changed and the percentage of PM 10 particles are higher. This fact is due in part to the first cyclone removing the larger particles and leaving the smaller particles in the air stream. The percentage of PM 10 dust on the filters was greatly increased with the emissions from the 2D2D and 1D3D cyclones having a larger percentage by weight of particles less than 10 microns. Again as in 1990, this was due to the fact the 2D2D and 1D3D cyclones removed more of the larger particles than did the LD cyclone. The mass median diameter of the particles ranged from 4.5 to 7.7 microns for the 1D3D and LD cyclones, respectively.

The total concentration of dust emitted from the LD cyclone was greater than that from the 2D2D or the 1D3D cyclone. The PM 10 concentration emitted by the 2D2D cyclone was lower than that emitted by the LD cyclone. Although the PM 10 emissions from the 1D3D cyclone showed a trend to be less than those from the 2D2D cyclone, the values were not statistically different. Emissions data after two cyclones indicate no differences in treatment means for mass median diameter or PM 10 dust. The total concentration mean for the 2D2D+1D3D treatment was lower than the LD+2D2D and the LD+1D3D treatments. The same trend was seen for the PM 10 concentrations with the lowest concentration being associated with the 2D2D+1D3D treatment and the highest concentration associated with the LD+2D2D treatment.

Efficiencies

1990 Study

The efficiencies reported in Table 4 are based on the particulate concentration of the air entering the cyclone minus the particulate concentration in the cyclone exhaust divided by the entering particulate concentration. As stated earlier, the particulates used in this study were from air that had been used to convey seed cotton and thus had never been pre-collected by other cyclones. This fact could account for the differences in cyclone efficiencies reported in the "Introduction" that were all above 99%.

As expected, the 2D2D cyclone had a higher collection efficiency than the LD cyclone. The efficiencies of the 2D2D and 1D3D cyclone were not significantly different when used as the secondary collector. Combined efficiencies were higher than single cyclones with the 2D2D+1D3D treatment being highest though not statistically different from the LD+1D3D treatment. Thus, adding the 1D3D cyclone to the 2D2D cyclone resulted in significant reduction in emissions, however, the combined efficiency of the LD+1D3D was not significantly different, and the pressure drop was not as large. Efficiencies of the primary cyclone for PM 10 emissions were similar to those for total emissions with the 2D2D cyclone having the higher efficiency. The 2D2D and 1D3D cyclones had similar efficiencies when used after the LD cyclone. The combined efficiencies data indicated the 2D2D+1D3D treatment had the highest value but was not significantly different from the LD+1D3D treatment. Thus, from

the standpoint of reducing PM 10 emissions, the LD+1D3D cyclone treatment provided the same reduction as did the 2D2D+1D3D treatment.

1991 Study

Efficiencies for the three types of cyclones as the primary collectors for total emissions are shown in Table 4. The primary collector efficiency for the 2D2D and 1D3D cyclones were not statistically different from each other but were higher than that for the LD cyclone. The secondary cyclone efficiency was lower for the 1D3D cyclone when combined with the 2D2D cyclone. The combined efficiency was highest for the 2D2D+1D3D (28.9% higher than the LD+1D3D) treatment and the LD+2D2D and LD+1D3D treatments were not different. Thus, adding the 1D3D cyclone to the 2D2D cyclone resulted in significant reduction in emissions. Efficiencies of the 2D2D and 1D3D cyclones, when used as the primary collectors, were 24.2 and 23.0 percentage points higher than when they were used as the secondary collector behind the LD cyclone.

Efficiencies of the primary cyclone for PM 10 emissions were similar to those for total emissions with the 1D3D cyclone having the highest efficiency though not different from the 2D2D or the 2D2D+1D3D treatment. Efficiencies of the 2D2D and 1D3D cyclones, when used as the primary collector, were 27.3 and 26.0 percentage points higher than when they were used as the secondary collector behind the LD cyclone. The 2D2D and 1D3D cyclones had statistically equal efficiencies when used after the LD cyclone. The combined efficiencies indicated the 2D2D+1D3D treatment had the highest value, 31.5% higher than the LD+2D2D treatment. Thus from the standpoint of reducing PM 10 emissions, the LD+2D2D and the LD+1D3D treatments provided the same reduction but not as much as the 2D2D+1D3D treatment. The static pressure drop across the 2D2D+1D3D treatment was the highest of all treatments, however, given the environmental concerns and the reduction in emissions, the 2D2D+1D3D combination would be the best configuration of those tested.

Summary and Conclusions

Experiments were conducted in 1990 and 1991 using four and five cyclone treatments, respectively, to determine the collection efficiency of particulates from cotton gins and to determine the reduction of PM 10 emissions. The cyclones were used to clean the exhaust from an unloader fan separator which probably contains a higher percentage of fine dust than some of the other systems such as the trash fans from seed cotton cleaners. As the primary collector, the 1D3D cyclone had the lowest emission rate but was not statistically different from the 2D2D cyclone treatment. All three cyclones lowered the total and PM 10 particulate concentrations in the emissions. As expected, the 2D2D and the 1D3D cyclones accomplished a greater reduction than did the LD cyclone for both total and PM 10 emissions. The addition of a second cyclone after the LD

cyclone further reduced the emissions. The 2D2D+1D3D treatment obtained the highest reduction in both total and PM 10 emissions; however, in the 1990 study the LD+1D3D treatment performed as well.

The efficiencies of the 2D2D and 1D3D cyclones for reducing total emissions were higher when used as the primary collector as opposed to being the secondary collectors behind the LD cyclone. This was probably due to higher emissions entering the cyclone. In reducing PM 10 emissions, the efficiencies of the 2D2D and 1D3D cyclones were again higher when used as the primary collectors. The 2D2D+1D3D cyclone treatment had the highest efficiency of reducing both total and PM 10 emissions. This treatment also had the highest pressure drop which means that it would require more horsepower to operate. The 2D2D+1D3D was the most efficient configuration in reducing particulate emissions of those tested. Therefore, in those areas where increased collection efficiencies are needed, the 2D2D+1D3D system offers that option.

References

1. Baker, R. V. and V. L. Stedronsky. 1967. Gin trash collection efficiency of small diameter cyclones. USDA ARS 42-133. 16 p.

2. Columbus, E. P. and W. S. Anthony. 1990. Sequential cyclones to clean gin exhausts. ASAE Paper No. 904063, 17 p.

3. Federal Register. 1987. Vol 52, No. 126. Revisions to the National Ambient Air Quality Standards for Particulate Emissions, p 24634.

4. Gillum, M. N., S. E. Hughs, and B. M. Armijo. 1982. Use of secondary cyclones for reducing gin emissions. Transactions of the ASAE 25(1):210-213.

5. Gillum, M. N. and S. E. Hughs. 1983. Velocity effects on operating parameters of series cyclones. Transactions of the ASAE 26(2):606-609.

6. Griffin, A. C., Jr. and E. P. Columbus. 1981. Dust in cotton gins: An overview. Pages 27-36 in J. G. Montalvo, Jr. ed. Cotton Dust: Controlling an Occupational Health Hazard. American Chemical Society Symposium Series, No. 189.

7. Harrell, E. A. and V. P. Moore. 1962. Trash collecting systems at cotton gins. USDA, ARS 42-62.

8. Herber, D. J. and C. B. Parnell, Jr. 1988. Comparison of PM 10 and high-volume air samplers using a Coulter Counter particle size analyzer. ASAE Paper No. SWR 88-109, 11 p.

9. Parnell, C. B., Jr., and D. Davis. 1979. Predicted effects of the use of new cyclone designs on agricultural processing particulate emissions. Southwest Region Meeting. ASAE, Hot Springs, AR.

10. Parnell, C. B. Jr., P. Hickman, and F. Guzman. 1982. Cyclone design methodology for agricultural processing. ASAE Paper No. 82-3582, 17 p.

11. SAS Institute, Inc., SAS/STAT User's Guide, Version 6, Fourth Edition, Volume 2, 1989. Cary, NC: Sas Institute, Inc., 846 p.

12. Wesley, R. A., O. L. McCaskill, and E. P. Columbus. 1970. A comparison and evaluation of performance of two small-diameter cyclones for collecting cotton gin waste. USDA, ARS 42-167.

13. Wesley, R. A., W. D. Mayfield, and O. L. McCaskill. 1972. An evaluation of the cyclone collector for cotton gins. USDA, ARS Technical Bulletin No. 1439, 13 p.

Table 1. Average inlet velocity corrected for temperature, relative humidity and barometric pressure, and pressure drop across cyclones.

Treat-	Velocity[1], m/s (ft/min)			Pressure drop[2], kPa (in. water)			
ment	LD	2D2D	1D3D	LD	2D2D	1D3D	Total
1990 Study							
1	-- (--)[3]	15.8 (3115)	-- (--)[3]	-- (--)[3]	1.27 (5.1)	-- (--)[3]	1.27 (5.1)
2	10.6 (2082)	12.8 (2525)	-- (--)[3]	0.34 (1.4)	1.07 (4.3)	-- (--)[3]	1.41 (5.7)
3	11.0 (2170)	-- (--)[3]	14.0 (2765)	0.30 (1.2)	-- (--)[3]	1.39 (5.6)	1.69 (6.8)
4	-- (--)[3]	12.8 (2530)	13.4 (2630)	-- (--)[3]	1.14 (4.6)	1.29 (5.2)	2.43 (9.8)
1991 Study							
1	-- (--)[3]	15.2 (2987)	-- (--)[3]	-- (--)[3]	1.32 (5.3)	-- (--)[3]	1.3 (5.3)
2	-- (--)[3]	-- (--)[3]	16.23 (3195)	-- (--)[3]	-- (--)[3]	1.62 (6.5)	1.6 (6.5)
3	8.7 (1718)	15.39 (3030)	-- (--)[3]	0.32 (1.3)	1.34 (5.4)	-- (--)[3]	1.7 (6.7)
4	8.8 (1737)	-- (--)[3]	16.46 (3241)	0.32 (1.3)	-- (--)[3]	1.54 (6.2)	1.9 (7.5)
5	-- (--)[3]	15.39 (3030)	16.01 (3152)	-- (--)[3]	1.27 (5.1)	1.29 (5.2)	2.6 (10.3)

[1]Velocity in cyclone inlet transition.
[2]Includes pressure drop of inlet and outlet transitions.
[3]Not in test sequence.

Table 2. Dust concentrations before, during and after cyclone collection treatments, 1990 study.

	Before cyclones				After one cyclone			
Treatment	PM 10 dust, %	Mass median diameter, microns	Total concentration, $\mu g/m^3$	PM 10 concentration, $\mu g/m^3$	PM 10 dust, %	Mass median diameter, microns	Total concentration, $\mu g/m^3$	PM 10 concentration, $\mu g/m^3$
2D2D	52.3bc[2]	9.8a	40626.8a	19739.8a	83.0a	5.0b	3064.0b	2527.5b
LD+2D2D	58.5a	8.3b	30845.1a	18031.2a	74.5b	6.3a	8930.9a	6647.0a
LD+1D3D	57.4ab	8.7b	32792.4a	18546.6a	75.1b	6.4a	5182.0b	3879.5b
2D2D+1D3D	49.9c	10.1a	39472.5a	19595.0a	85.5a	5.3b	3600.6b	2926.4b

Table 2. Continued.

After two cyclones			
PM 10 dust, %	Mass median diameter, microns	Total concentration, $\mu g/m^3$	PM 10 concentration, $\mu g/m^3$
2	2	2	2
76.2b	5.6a	2167.4a	1648.5a
76.6b	5.7a	1433.2ab	1094.3ab
77.7a	4.9a	1069.6b	829.6b

[1]Means in a column not followed by the same letter are significantly different at the 5% level of probability as judged by Duncan's Multiple Range Test.
[2]Only one cyclone used in the treatment.

Table 3. Dust concentrations in the exhaust air before and after cyclone collection treatments, 1991 Study.

	Before cyclones				After one cyclone			
Treatment	PM 10[2] dust, %	Mass median diameter, microns	Total concentration, .µg/m^3	PM 10 concentration, .µg/m^3	PM 10[2] dust, %	Mass median diameter, microns	Total concentration, .µg/m^3	PM 10 concentration, .µg/m^3
2D2D	45.9b	11.0a	186,355.0a	85,428.6a	82.8a	4.6c	9,340.5b	7,748.1b
1D3D	52.7a	9.4a	135,996.7ab	71,959.2a	76.2b	4.5c	6,347.3b	4,843.3b
LD+2D2D	46.7ab	10.8a	131,128.5b	61,301.5a	64.6d	7.7a	29,616.1a	19,160.0a
LD+1D3D	46.2ab	10.9a	131,735.2b	60,895.1a	64.0d	7.7a	28,501.2a	18,230.6a
2D2D+1D3D	48.0ab	10.6a	154,113.6ab	74,630.0a	69.8c	5.8b	8,833.2b	6,175.6b

Table 3. Continued.

After two cyclones[1]			
PM 10[2] dust, %	Mass median diameter, microns	Total concentration, .µg/m^3	PM 10 concentration, .µg/m^3
--[3]	--[3]	--[3]	--[3]
--[3]	--[3]	--[3]	--[3]
80.2a	4.6a	8,554.3a	6,851.6a
79.2a	4.9a	7,600.9a	6,030.2a
81.4a	4.8a	5,405.2b	4,399.1b

[1]Means in a column not followed by the same letter are significantly different at the 5% level of probability as judged by Duncan's Multiple Range Test.

[2]Particles captured on the filters that were less than 10 microns, expressed as a percent.

[3]Only one cyclone used in the treatment.

Table 4. Collection efficiencies of primary and secondary cyclones.

	Efficiencies based on total emissions, %[2]			Efficiencies based on PM 10 emissions, %[2]		
Treatment[1]	Primary cyclone	Secondary cyclone	Combined	Primary cyclone	Secondary cyclone	Combined
1990 Study						
2D2D	94.2a	--[3]	--[3]	87.9a	--[3]	--[3]
LD+2D2D	71.1c	75.8a	93.0b	63.2c	75.3a	90.9b
LD+1D3D	84.0b	72.6a	95.6ab	78.9b	72.0a	94.2ab
2D2D+1D3D	90.5a	69.0a	97.2a	84.5ab	70.6a	95.6a
1991 Study						
2D2D	95.0a	--[3]	--[3]	90.9a	--[3]	--[3]
1D3D	95.2a	--[3]	--[3]	92.9a	--[3]	--[3]
LD+2D2D	77.3b	70.8a	93.5b	68.2b	63.6a	88.8b
LD+1D3D	78.3b	73.2a	94.2b	69.7b	66.9a	90.0b
2D2D+1D3D	94.2a	38.5b	96.4a	91.5a	28.0	93.8a

[1]Primary cyclone listed first.

[2]Means in a column not followed by the same letter are significantly different at the 5% level of probability as judged by Duncan's Multiple Range Test.

[3]No secondary cyclone in the test sequence.

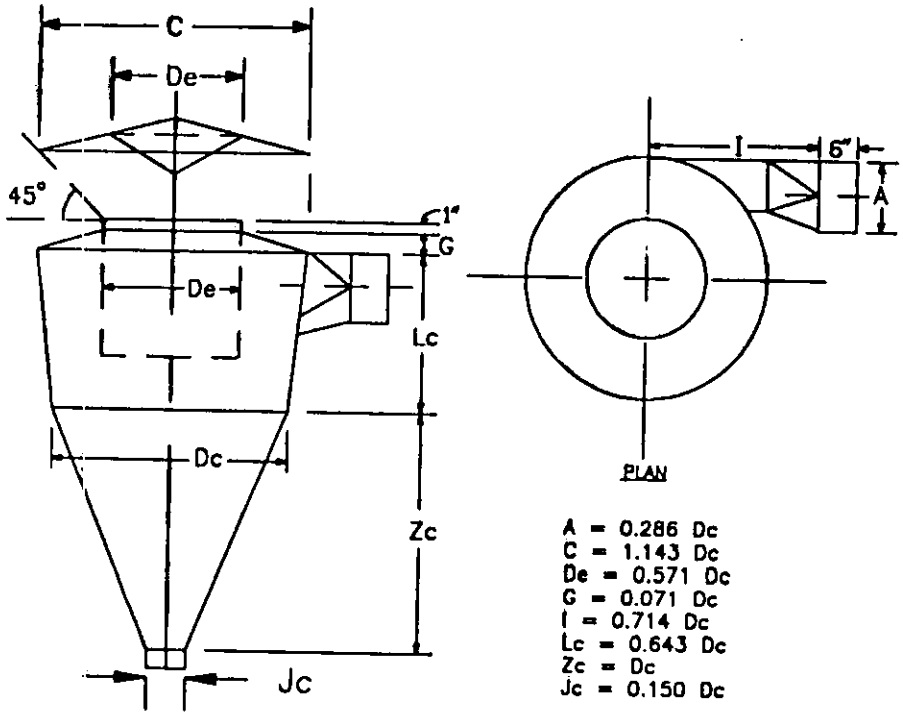

Figure 1. Relative dimensions of the large diameter (LD) cyclone. The dimensions are based on the air flow ratio (see reference No. 7, Harrell and Moore, 1962).

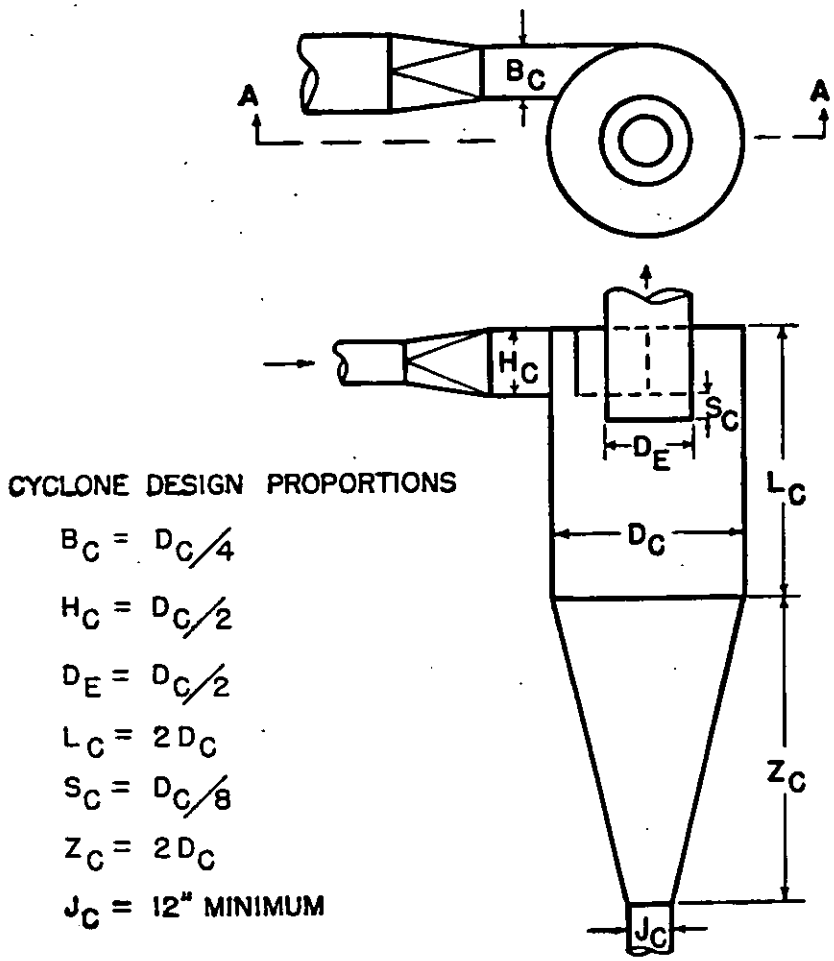

Figure 2. Relative dimensions of the conventional 2D2D cyclone.

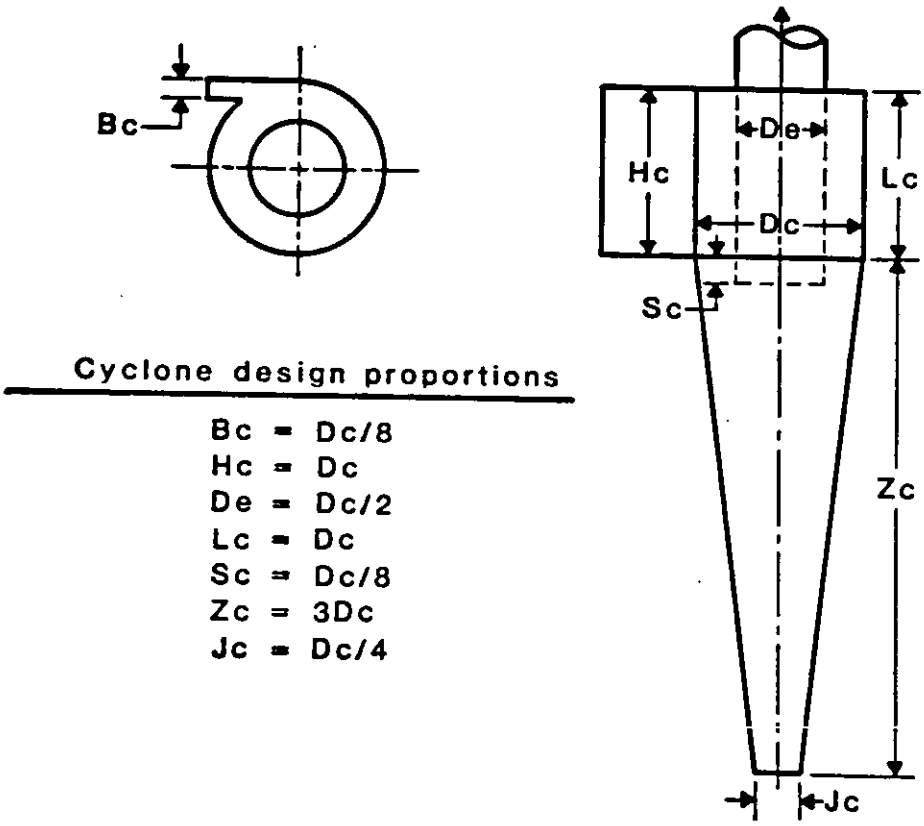

Figure 3. Relative dimensions of the long cone or 1D3D cyclone.

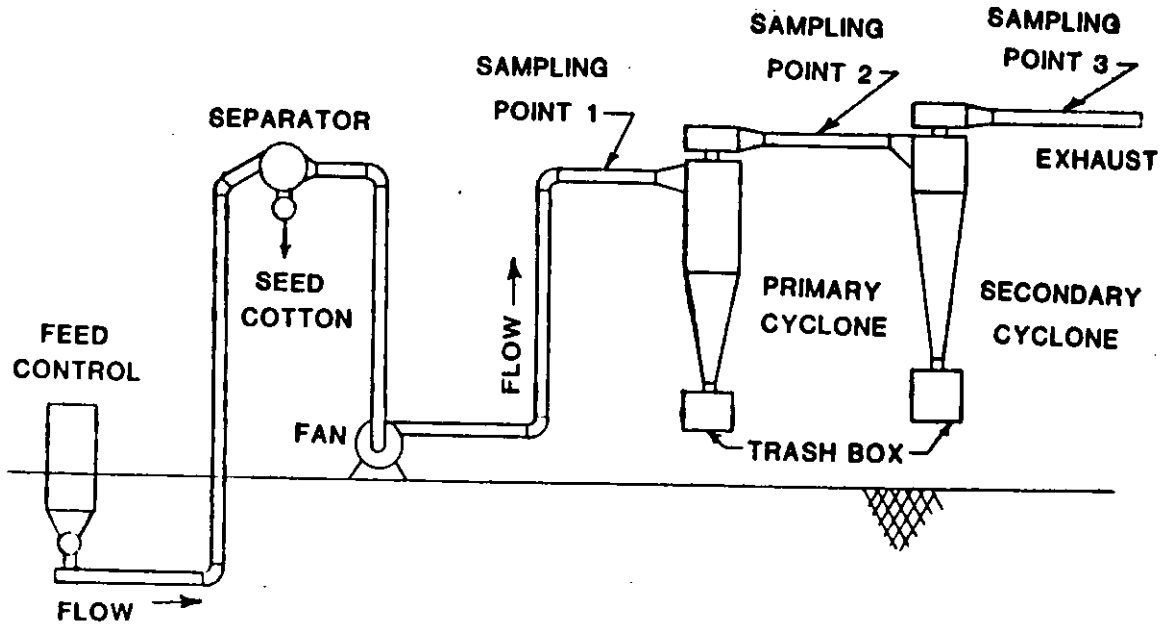

Figure 4. Schematic showing feed control, separator, fan, cyclones and sampling stations.