702-02-01 0:1

GE Energy
LELAP Certificate 01964

Jeffery C. Daniels
Senior Project Manager

ISO 9001 Accredited
Quality System

NITROGEN OXIDES AND CARBON MONOXIDE EMISSIONS PERFORMANCE TEST

Performed At
Motiva Enterprises, LLC
Norco Refinery
Sulfur Plant S3 Incinerator Stack
Norco, Louisiana

Agency Interest Number 1406
Title V Permit # 2903-V0
EPN 2-90
EQT 078

Test Date
March 5, 2008

Report No.
GE Energy Management Services, Inc. Project M22E1650C

Report Submittal Date
May 20, 2008

GE Energy Management Services, Inc.
888 Industrial Drive
Elmhurst, Illinois 60126
USA

T 630-530-6600
F 630-530-6630

GE Energy

TABLE OF CONTENTS

CERTIFICATION SHEET i

1.0 INTRODUCTION 1

1.1 Project Contact Information 1

2.0 SUMMARY OF RESULTS 2

3.0 DISCUSSION OF RESULTS 2

4.0 TEST PROCEDURES 2

4.1 General Test Procedures Using Instrumental Reference Methods 3

4.2 Volumetric Flowrate Determination 4

4.3 Oxygen (O_2) Determination 4

4.4 Oxygen (O_2)/Carbon Dioxide (CO_2) Determination 4

4.5 Moisture (H_2O) Determination 4

4.6 Nitrogen Oxides (NO_X) Determination 5

4.7 Carbon Monoxide (CO) Determination 5

5.0 QUALITY ASSURANCE PROCEDURES 6

6.0 TEST RESULTS SUMMARIES 7

APPENDIX

Test Section Diagrams 10

Sampling Train Diagrams 12

Calculation Nomenclature and Formulas 16

Plant Operating Data 22

Computerized Reference Method Test Run Data

Instrumental Reference Method Worksheets 26

Test Run Averages 30

Bias and Drift Calibrations 33

Volumetric Exhaust Flow Data 38

Field Data Forms (By Hand) 41

Test Equipment Calibration Data 46

Calibration Gas Cylinder Data 60

NO_2 to NO Conversion Test Data 67

Response Time Test Data 69

Interference Test Information 71

LELAP Certificate 74

ISO 9001 Certificate 75

GE Energy

CERTIFICATION SHEET

Having supervised the test program described in this report, and having written this report, I hereby certify the data, information, and results in this report to be accurate and true according to the methods and procedures used.

GE Energy holds a certificate (see attached) in the Louisiana Environmental Laboratory Accreditation Program and incorporates GE Energy's ISO 9001 Accredited Quality Assurance Program into every segment of its testing activities. Data collected under the supervision of others is included in this report and is presumed gathered in accordance with recognized standards.

GE ENERGY MANAGEMENT SERVICES, INC.

Certification of sampling procedures by the team leader of the personnel conducting the sampling procedures:

Signature	Jeffery C. Daniels **Printed Name of Person Signing**
Senior Project Manager **Title**	May 20, 2008 **Date**

Certification of test report by the senior staff person at the testing company who is responsible for reviewing the test report:

Signature	Frank H. Jarke **Printed Name of Person Signing**
Quality Assurance Manager **Title**	May 20, 2008 **Date**

© 2008, General Electric Company. All rights reserved. The contents of this document are the property of General Electric Company. No part of this work may be reproduced or transmitted in any form or by any means, except as permitted in written license agreement with General Electric Company. General Electric Company has made every reasonable attempt to ensure the completeness and accuracy of this document. The GE logo is a registered trademark of General Electric Company

GE Energy

NITROGEN OXIDES AND CARBON MONOXIDE EMISSIONS PERFORMANCE TEST
Performed For
Motiva Enterprises LLC
At The
Norco Refinery
Sulfur Plant S3 Incinerator Stack
Norco, Louisiana
March 5, 2008

1.0 INTRODUCTION

GE Energy Management Services, Inc. (GE Energy) performed an emissions compliance test program to evaluate NO_X and CO emission rates, expressed as lb/hr, at the S3 Sulfur Incinerator Stack of Motiva Enterprises LLC Norco Refinery in Norco Louisiana in accordance with Specific Requirement number 29 of the Title V permit 2903-V0.

The performance tests were performed on March 5, 2008 in accordance with procedures described in the Code of Federal Regulations, Title 40, Part 60 (40CFR60) Appendix A. The emission limits are:

Unit	NO_X Emission Limit	CO Emission Limit
	Avg. Hourly lb/hr	Avg. Hourly lb/hr
S3	2.1	8.6

1.1 Project Contact Information

Location	Address	Contact
Test Facility	Motiva Enterprises LLC Norco Refinery 15536 River Road Norco, Louisiana 70079	Mr. Rene Thoulion Environmental Department 504-465-7264 (phone) rene.thoulion@motivaent.com
Testing Company Representative	GE Energy Management Services, Inc. 888 Industrial Drive Elmhurst, Illinois 60126	Mr. Jeffery C. Daniels Senior Project Manager 630-530-6655 (phone) 630-530-6630 (fax) jeffery.daniels@ge.com

The GE Energy test crew consisted of J. Hamner, R. Leski and J. Daniels of GE Energy.

2.0 SUMMARY OF RESULTS

The average test results of the performance test are presented in the following table. Complete test results are presented in Section 6.0.

Criteria	Test Date	Permit Limit	Actual Performance
NO_X lb/hr emission rate	March 5, 2008	2.1	2.0
CO lb/hr emission rate		8.6	0.2

3.0 DISCUSSION OF RESULTS

The test results indicate the NO_X and CO emissions meet the performance criteria specified by Specific Requirement number 29 of the Title V permit 2903-V0.

The velocity pressure readings were observed to be low enough to require the use of a more sensitive differential pressure gauge than described in USEPA Method 2 (a 10" water column inclined-vertical manometer, having 0.01" H_2O divisions on the 0 to 1" inclined scale, and 0.1" H_20 divisions on the 1 to 10" vertical scale). A Dwyer 0.25" water column inclined manometer was used.

The raw RM data used to document quality assurance checks and test run averages are appended. A PDF of the complete record for the test period is archived on the GE Energy server in Elmhurst, Illinois and can be made available upon request.

Three (3) test runs were performed at the S3 Incinerator Stack. The average value for each pollutant parameter was used to demonstrate compliance with the specified emission standard. The equations used to determine the NO_X and CO emission rates are appended.

4.0 TEST PROCEDURES

All testing, sampling, analytical, and calibration procedures used for this test program were performed as described in the Code of Federal Regulations, Title 40, Part 60 (40CFR60), Appendix A, Methods 1, 2, 3, 3A, 7E, 10, and the latest revisions thereof. Where applicable, the Quality Assurance Handbook for Air Pollution Measurement Systems, Volume III, Stationary Source Specific Methods USEPA 600/R-94/038c, September 1994 was used to supplement procedures.

4.1 General Test Procedures Using Instrumental Reference Methods

GE Energy performed the NO_X and CO performance tests using a temperature controlled mobile emissions laboratory. The laboratory was equipped with precision gas analyzers that meet or exceed the equipment requirements of the specified instrumental reference methods.

A temporary record of the analyzer outputs was recorded on a data logger. Using a computer the data logger files were converted to a permanent data file using PDF software and the raw data was imported into Microsoft Excel to reduce the data into a format to report average test results, calibration responses and quality assurance checks.

The specific reference methods used are identified in following sections. All applicable reference method measurements were performed simultaneously for each test run. Each of the specified instrumental test methods follows similar procedures.

Each gaseous sample was collected using an extractive sampling. A sample probe with a Nickel alloy liner was used to traverse the test point on a measurement line with points at three points located at 16.7, 50.0 and 83.3 percent of the stack diameter, for 20 minutes at each point using one port. The gas stream was conditioned by filtering particulate and condensing moisture prior to conveying gas to the analyzers.

A system response time test was performed for each instrument used. Calibrations were performed using EPA Protocol gases. Zero gas was used to zero the instrument. Prior to sampling, the pollutant analyzers were calibrated directly with high-range, mid-range, and zero gases. Before and after each test run, zero and upscale calibration gases were introduced into the sampling system to check system bias and calibration drift. A period equal to or greater than twice the longest observed response was allowed to pass before starting a test run after completing a system calibration check.

An interference test has been performed for each model of analyzer used to document the response to common interference. Interference test information is appended to this report.

Two sets of printouts from the Motiva Norco operating data historian were generated during the performance tests that bracketed the emission tests. The printouts present the operating parameters for the S3 Thermal Reactor and the Incinerator Stack during the emission tests.

4.2 Volumetric Flowrate Determination

In order to determine emission rates on lb/hr basis, the stack gas velocity and volumetric flowrate were determined using Method 2, 40CFR60.

Velocity pressures were determined by traversing the test location with an S-type pitot tube. Temperatures were measured using a K-type thermocouple with a calibrated digital temperature indicator. The molecular weight and moisture content of the gases were determined to permit the calculation of the volumetric flowrate. Sampling points utilized were determined using Method 1, 40CFR60.

4.3 Oxygen (O_2) Determination

An Servomex Model 1440 oxygen (O_2) analyzer was used to determine O_2 concentrations in the stack gas in accordance with Method 3A, 40CFR60. This instrument has a paramagnetic detector and operates in a range of 0-25% CO_2.

4.4 Oxygen (O_2)/Carbon Dioxide (CO_2) Determination

Oxygen (O_2) and carbon dioxide (CO_2) gas content was determined for the velocity traverse tests in accordance with Method 3, 40CFR60. This method analyzed samples collected in a grab manner using a Fyrite gas analyzer. Several gas extractions were performed during each test run to ensure a stable reading. Mandatory leak checks were performed prior to and following each use. Chemicals are changed frequently and inspected for reactivity prior to each use.

4.5 Moisture (H_2O) Determination

An Alternative Method for Stack Gas Moisture Determination, written by John Stanley and Peter Westlin, August 1978, Emission Measurement Branch, USEPA, was utilized to determine water (H_2O) content of the exhaust gas. The sampling equipment was the same as specified for the moisture approximation method in Reference Method 4, except for the addition of two impingers, one containing silica gel. (Note: This is not an approximation method.)

Approximately 15 ml of water were added to each of the first two impingers and the third was left empty. An impinger containing approximately 15 grams of silica gel was attached following the third impinger. The entire impinger train, excluding the inlet and outlet connectors, was weighed to the nearest 0.05 gram. The impingers were placed in an ice bath.

Each moisture test run was performed simultaneously with the pollutant measurement run that the moisture run data would be applied to. Each test run

sample was extracted through a stainless steel probe at a constant sample rate of between 1 to 4 liters per minute, which was maintained during the course of the other simultaneous reference method sampling. This method specifies a minimum moisture catch of 1.0 gram to maintain measurement accuracy. An adequate volume was drawn to collect more than 1.0 gram of moisture (typically greater than 15 minutes).

After each run, a leak check of the sampling train was performed at a vacuum greater than the vacuum observed during the test run. An acceptable leak check indicates no flow with the dry gas meter remaining stationary for one minute and no more than one bubble per second being observed in the impingers. Following the leak check, the impingers were removed from the ice bath and allowed to warm. Any condensed moisture on the exterior was removed and the train reweighed.

4.6 Nitrogen Oxides (NO_X) Determination

Method 7E was used for determining nitrogen oxides (NO_X) emissions from the test location. A portion of the gas stream was conveyed to a Thermo Environmental Model 42C gas analyzer for determination of NO_X content. This instrument has a chemiluminesce detector and operates at several range settings.

To measure NO_X concentrations (i.e., NO plus NO_2), the sample gas flow was diverted through a NO_2-to-NO converter. A NO_2 to NO conversion tests was performed each day that the NO_X analyzer was used, prior to performing any test runs. The instrument was operated in the NO_X mode during all tests and calibrations.

4.7 Carbon Monoxide (CO) Determination

USEPA Method 10 procedure was used to determine the carbon monoxide (CO) concentrations using a Thermo Environmental Model 48C nondispersive infrared analyzer (NDIR). This instrument employs an internal gas correlation filter wheel, which eliminates potential detector interference. Instruments so equipped do not require the use of the interference removal trap.

5.0 QUALITY ASSURANCE PROCEDURES

GE Energy recognizes the previously described reference methods to be very technique oriented and attempts to minimize all factors that can increase error by implementing its Quality Assurance Program into every segment of its testing activities.

All calibration gases were certified in accordance with EPA Traceability Protocol for Assay and Certification of Gaseous Calibration Standards, USEPA 600/R-97/121, September 1997. Calibration gas certificates are appended.

6.0 TEST RESULTS SUMMARIES

GASEOUS TEST RESULTS SUMMARY

NO_X AND CO Emissions Performance Test
Motiva Enterprises, LLC
Norco Refinery
S3 Sulfur Incinerator Stack
Norco, Louisiana

Run #	Start Time	End Time	NOx ppmvd	CO ppmvd	O2 % dry	NOx lb/hr	CO lb/hr	Flow dscfm
1	13:45	14:45	22.5	3.3	6.7	1.9	0.2	12,060
2	15:08	16:08	22.8	3.4	6.5	2.0	0.2	12,102
3	16:31	17:31	25.1	4.3	6.4	2.2	0.2	12,074
Average			23.5	3.7	6.5	2.0	0.2	12,079

APPENDIX

EQUAL AREA TRAVERSE FOR ROUND DUCTS (VELOCITY TRAVERSE)

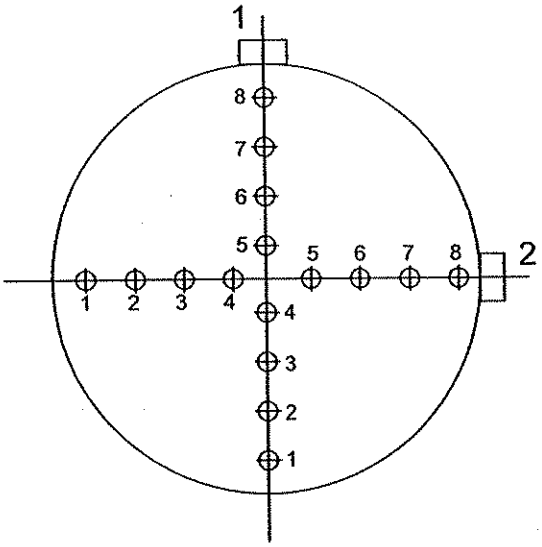

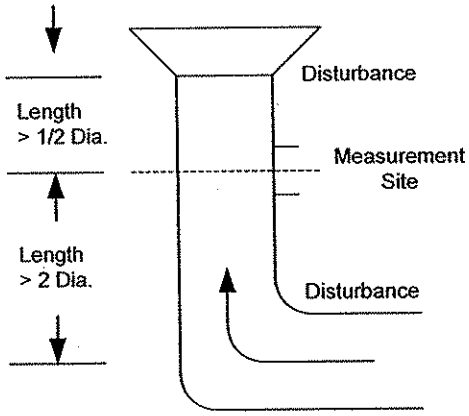

Job:	Motiva Enterprises LLC Norco Refinery Norco, Louisiana
Date:	March 5, 2008
Unit No:	Sulfur Plant S3
Test Location:	Incinerator Stack
Diameter:	9 Feet 11 Inches
Area:	77.236 Square Feet
No. Sample Points:	16

GASEOUS TRAVERSE FOR ROUND DUCTS

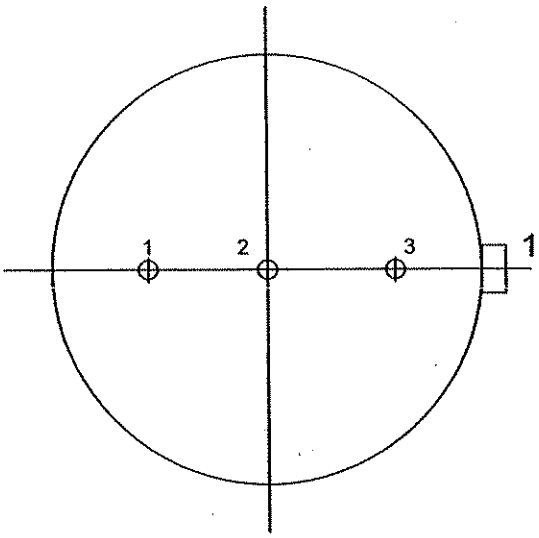

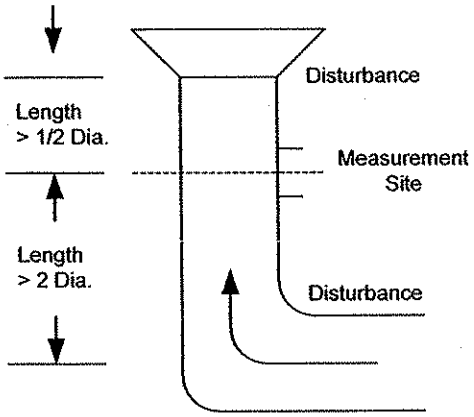

Job: Motiva Enterprises, LLC
Sulfur Plant
Norco, Louisiana

Date: March 5, 2008

Test Location: S3 Incinerator Stack

No. Sample Points: 3

Percent of Stack Diameter:

1. 17% of the diameter
2. 50% of the diameter
3. 83% of the diameter

S-Type Pitot Tube Manometer Assembly

USEPA Method 2

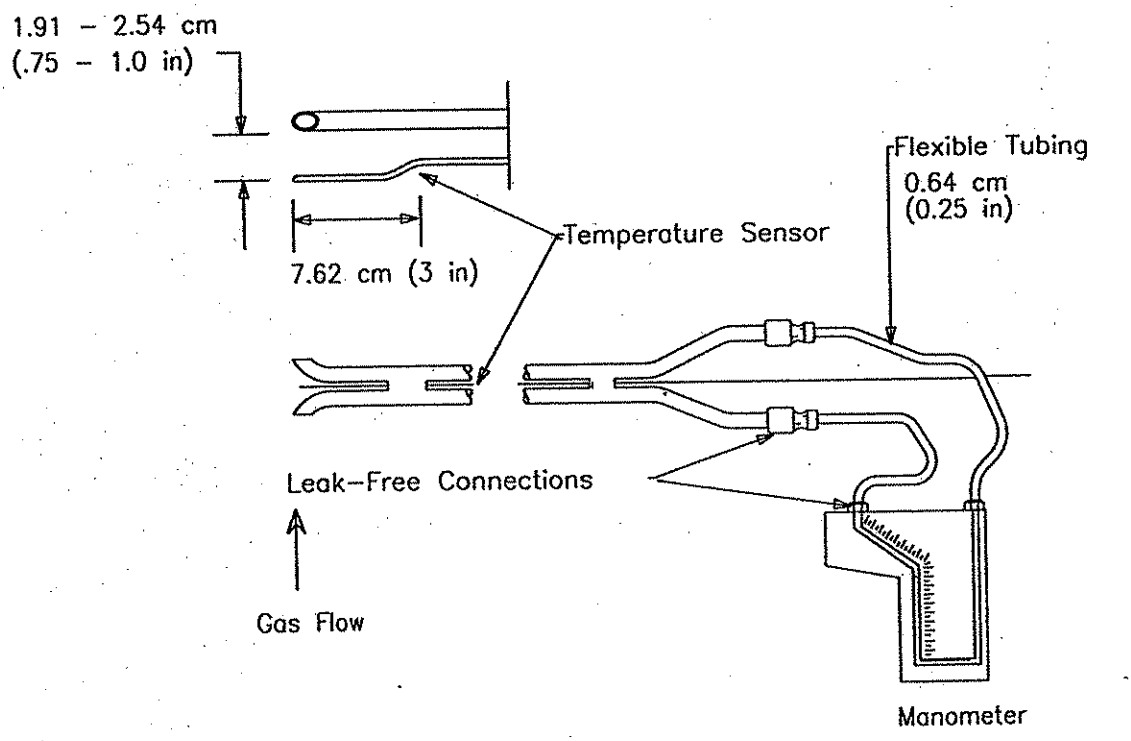

Dwg - AD

Sampling Train for Integrated Gas Sampling

USEPA Method 3

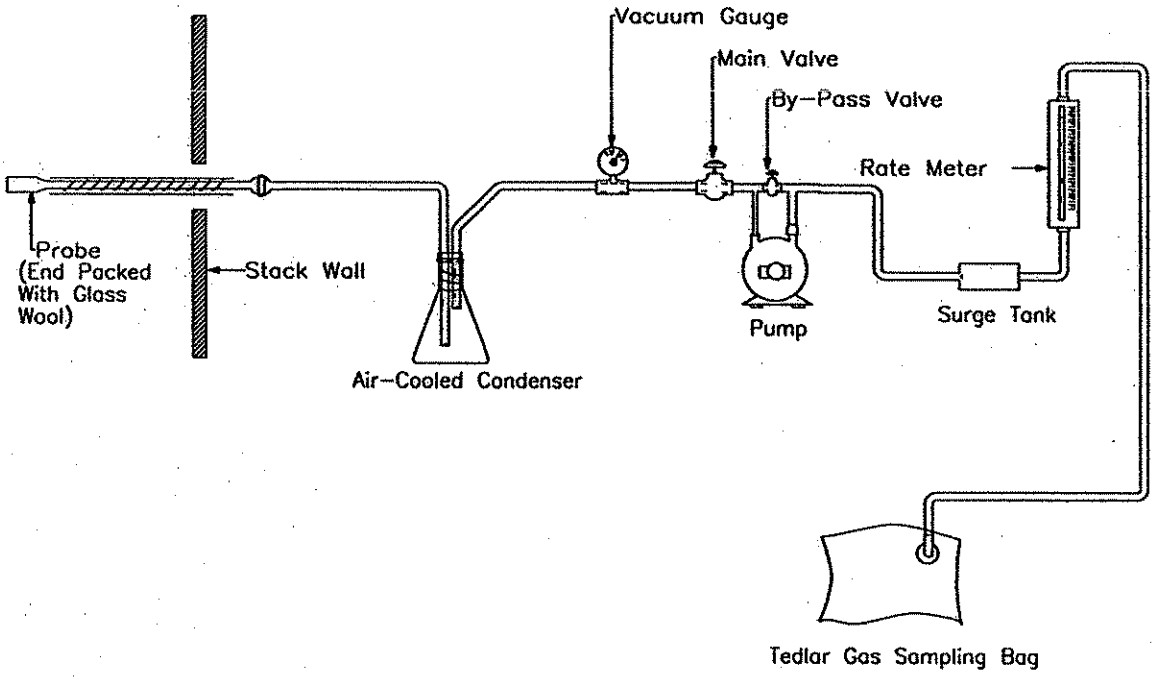

Dwg - E

Multi-Component Gaseous Sampling Train

USEPA Methods 3A, 7E or 10

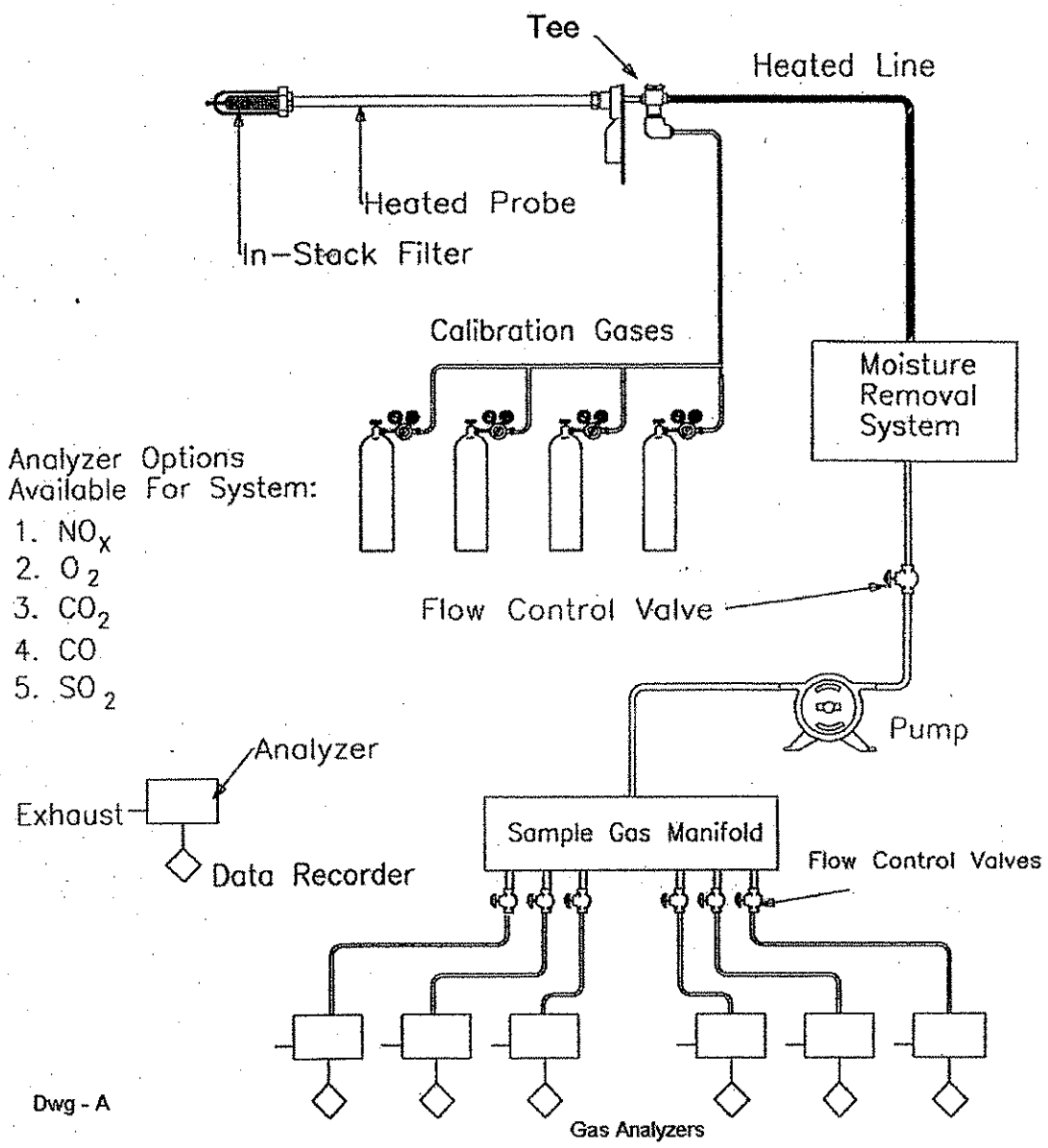

Determination of Moisture Content in Stack Gases

USEPA Method 4

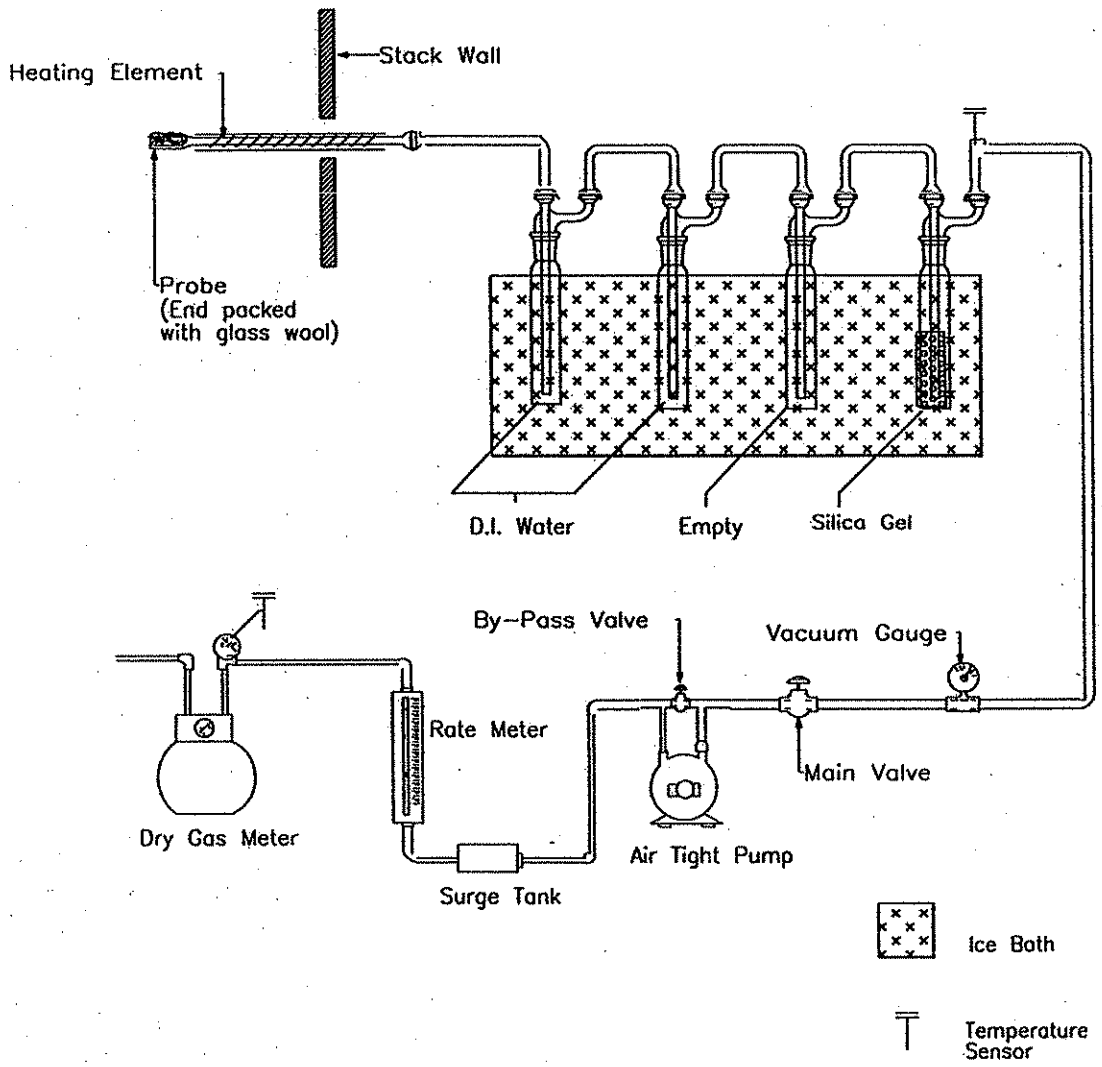

Dwg - T

Example Calculations - Volumetric Flow

Company: Motiva Enterprises, LLC
Plant: Norco Refinery
Source: Sulfur Plant S3 Incinerator Stack
Run: 1
Date: 03/05/08

Moisture Content

$$V_{m(std)} = \frac{528}{29.92} \times V_m \times \frac{P_{bar} + \frac{\Delta H}{13.6}}{(460 + T_m)} \times Y_d$$

$$V_{w(std)} = (0.04707 \times V_{lc} \text{ net } H_2O) + (0.04715 \times V_{lc} \text{ silica net } H_2O)$$

$$BWS = \frac{V_{w(std)}}{V_{w(std)} + V_{m(std)}}$$

$V_{w(std)}$ = 0.580 $V_{m(std)}$ = 3.201

B_{ws} = 0.153

Dry Molecular Weight

$$M_d = 0.44 \times (\%CO_2) + 0.32 \times (\%O_2) + 0.28 \times \%N_2$$

$\%CO_2$ = 10.8 $\%O_2$ = 6.6 $\%N_2$ = 82.6

M_d = 29.99

Wet Molecular Weight

$$M_s = M_d \times (1-B_{ws}) + (18.0 \times B_{ws})$$

M_d = 29.99 B_{ws} = 0.153

M_s = 28.16

Average Duct Velocity

$$V_s = 85.49 \times C_p \times (\text{Sqrt DP})_{avg} \times (T_{s(avg)}+460/(P_s \times M_s))^{1/2}$$

C_p = 0.823 $T_{s(avg)}$ = 1268.4 $(\text{Sqrt DP})_{avg}$: 0.100
P_s = 29.80 M_s = 28.16

V_s = 10.10

Volumetric Flow Rate

$$Q_{acfm\ (Actual\ CFM)} = V_s \times A \times 60$$

V_s = 10.10 A = 77.241

Q_{ACFM} = 46801

$$Q_{scfm\ (Standard\ cfm)} = \frac{528}{29.92} \times \frac{Q_{acfm} \times Ps}{460 + T_{s(avg)}}$$

Q_{acfm} = 46801 P_s = 29.80 $T_{s(avg)}$ = 1268.4

Q_{SCFM} = 14238

$$Q_{dscfm\ (Dry\ Standard\ CFM)}\ scfm \times (1 - B_{WS})$$

Q_{scfm} = 14238 B_{WS} = 0.153

Q_{dscfm} = 12060

© Copyright 2007 GE Energy

Example Calculations - Effluent Gas Concentration Determination

Project Number:	M22E1650	Test Date:	03/05/08
Customer:	Motiva Enterprises, LLC	Facility:	Norco Refinery
Unit Identification:	Sulfur Plant S3	Run #:	1

$$C_{gas} = (C - C_0) \times \frac{C_{ma}}{C_m - C_0}$$

Where:

C_{gas} = Effluent gas concentration (ppm or %vol)

C = Average gas concentration indicated by analyzer (ppm or %vol)

C_0 = Average of pre- and post-test system bias checks using low range gas (ppm or % vol)

C_m = Average of pre- and post-test system bias checks using upscale gas (ppm or % vol)

C_{ma} = Actual concentration of upscale gas (ppm or % vol)

NOx	C =	22.26 ppm	C_0 =	0.05 ppm
	C_m =	88.66 ppm	C_{ma} =	89.66 ppm
	C_{NOx} =	**22.5 ppm**		
CO	C =	3.38 ppm	C_0 =	0.12 ppm
	C_m =	50.08 ppm	C_{ma} =	50.20 ppm
	C_{CO} =	**3.3 ppm**		
O2	C =	6.77 %vol	C_0 =	0.08 %vol
	C_m =	12.40 %vol	C_{ma} =	12.41 %vol
	C_{O2} =	**6.7 %vol**		

© Copyright 2008 GE Energy

Example Calculations - Pollutant Emission Rate, Volumetric Flow Rate-Based

Project Number:	M22E1650	Test Date:	03/05/08
Customer:	Motiva Enterprises, LLC	Facility:	Norco Refinery
Unit Identification:	Sulfur Plant S3	Run #:	1

$$ER = C_{gas} \times MW \times 1.556E\text{-}07 \times Flow$$

Where:

ER = Pollutant emission rate (lb/hr)

C_{gas} = Pollutant concentration (ppm, wet or dry basis, but the same as flow)

MW = Pollutant molecular weight (lb/lb-mole)

Flow = Volumetric flow rate (cubic feet per minute wet or dry, but the same as C_{gas})

NOx	C_{gas} =	22.5 ppm		MW =	46.01 gr/gr-mole
	Flow =		12060 DSCFM		
	ER_{NOx} =	**1.9 lb/hr**			
CO	C_{gas} =	3.3 ppm		MW =	28.00 gr/gr-mole
	Flow =		12060 DSCFM		
	ER_{CO} =	**0.2 lb/hr**			

© Copyright 2008 GE Energy

VOLUMETRIC AIR FLOW CALCULATIONS

$$Vm\ (std) = \frac{528}{29.92} \times Vm \times \left[\frac{P_{bar} + \frac{\Delta H}{13.6}}{(460 + Tm)} \right] \times Y$$

$$Vw\ (std) = 0.0471 \times Vlc$$

Vlc = water + silica net

$$Bws = \left[\frac{Vw\ (std)}{Vw\ (std) + Vm\ (std)} \right]$$

$$Md = (0.44 \times \%CO_2) + (0.32 \times \%O_2) + [0.28 \times (100 - \%CO_2 - \%O_2)]$$

$$MS = Md \times (1 - Bws) + (18 \times Bws)$$

$$Vs = \sqrt{\frac{(Ts + 460)}{Ms \times Ps}} \times \sqrt{\Delta P} \times Cp \times 85.49$$

Cp = pitot tube correction factor
Ps = absolute flue gas pressure
Ms = molecular weight of gas (lb/lb mole)
Md = dry molecular weight of gas (lb/lb mole)
Bws = water vapor in gas stream proportion by volume

$$Acfm = Vs \times Area\ (of\ stack\ or\ duct) \times 60$$

$$Dscfm = Acfm \times \frac{528}{29.92} \times \left[\frac{Ps}{(460 + Ts)} \right] \times (1 - Bws)$$

$$Scfm = Acfm \times \frac{528}{29.92} \times \left[\frac{Ps}{(460 + Ts)} \right]$$

$$Scfh = Scfm \times 60 \frac{min}{hr}$$

© Copyright 2007 GE Energy

MOISTURE CALCULATIONS

$$V_{wc(std)} = \frac{(V_f - V_i)\,\rho_w\,R\,T_{std}}{P_{std}M_w} = 0.04707(V_f - V_i)$$

$$V_{wsg(std)} = \frac{(W_f - W_i)\,R\,T_{std}}{P_{std}\,M_w} = 0.04715\ (W_f - W_i)$$

$$V_{m(std)} = \frac{528}{29.92}\ V_m\ Y\ \frac{P_{bar} + \frac{\Delta H}{13.6}}{T_m}$$

$$B_{ws} = \frac{V_{wc(std)} + V_{wsg(std)}}{V_{wc(std)} + V_{wsg(std)} + V_{m(std)}}$$

Where:

B_{ws} = Water vapor in gas stream, proportion by volume
M_w = Molecular weight of water, 18.015 lb/lb-mole
P_{bar} = Barometric pressure at the testing site, in. Hg
P_{std} = Standard absolute pressure, 29.92 in. Hg
R = Ideal gas constant, 0.048137 (in. Hg)(ft^3)/(g-mole)(°R) = [21.8348(in. Hg)(ft^3)/(lb-mole)(°R)]/453.592 g-mole/lb-mole
T_m = Absolute average dry gas meter temperature, °R
T_{std} = Standard absolute temperature, 528 °R
V_f = Final volume of condenser water, ml
V_i = Initial volume of condenser water, ml
V_m = Dry gas volume measured by dry gas meter, dcf
$V_{m(std)}$ = Dry gas volume measured by dry gas meter, corrected to standard conditions, scf
$V_{wc(std)}$ = Volume of condensed water vapor, corrected to standard conditions, scf
$V_{wsg(std)}$ = Volume of water vapor collected in silica gel, corrected to standard conditions, scf
W_f = Final weight of silica gel, g
W_i = Initial weight of silica gel, g
Y = Dry gas meter calibration factor
ΔH = Average pressure exerted on dry gas meter outlet by gas sample bag, in. H_2O
ρ_w = Density of water, 0.9982 g/ml
13.6 = Specific gravity of mercury (Hg)
17.64 = T_{std}/P_{std}
0.04707 = ft^3/ml
0.04715 = ft^3/g

©Copyright 2007 GE Energy

DERIVATION OF FACTORS USED IN CO AND NO_x CALCULATIONS

Factors for calculating concentration as pounds per dry standard cubic feet:

$$\text{Factor for } C_{CO} = \frac{28.01 \text{ grams/gram-mole}}{2\frac{\text{gram-equivalents}}{\text{gram-mole}} \times 1000\frac{\text{gram-milliquivalents}}{\text{gram-equivalent}} \times 453.592\frac{\text{grams}}{\text{lb}}}$$

$$= 3.087577 \times 10^{-5} \text{ lb/g-meq} \quad \underline{\text{Use } 3.0876 \times 10^{-5}}$$

$$\text{Factor for } C_{NO_2} \text{ as } NO_2 = \frac{28316.846 \text{ ml/scf}}{4.53592 \times 10^{8} \ \mu\text{g/lb}} = 6.242801 \times 10^{-5} \frac{\text{lb/scf}}{\mu\text{g/ml}} \quad \underline{\text{Use } 6.2428 \times 10^{-5}}$$

Factors for calculating from lb/dscf to parts per million:

Using 22.414 liters of gas per gram-mole at 0°C and 1 atmosphere pressure,

One pound-mole of gas is contained in 359.04765 ft^3 at 32°F and 29.92 in. Hg, or 385.31943 ft^3 at 68°F and 29.92 in. Hg

$$\text{ppm} = \frac{\text{Mlb/lb-mole}}{385.31943 \text{ dscf/lb-mole} \times 10^6} = 2.5952494 \times 10^{-9} \text{ M lb/dscf}$$

Where M = pollutant molecular weight; CO = 28.01 lb/lb-mole; and NO_2 = 46.0055 lb/lb-mole

$$\text{Factor for ppm CO} = \frac{1}{28.01 \times 2.5952 \times 10^{-9}} = 1.375676 \times 10^{5} \text{ dscf/lb}$$

$$\underline{\text{Use } 1.3757 \times 10^{5}}$$

$$\text{Factor for ppm } NO_x = \frac{1}{46.0055 \times 2.5952494 \times 10^{-9}} = 8.3755079 \times 10^{6} \text{ dscf/lb}$$

$$\underline{\text{Use } 8.3755 \times 10^{6}}$$

All constant values and conversion factors were taken from the CRC *Handbook of Chemistry and Physics* , 48th Edition 1967-1968 and from the latest Periodic Table of Elements.

© Copyright 2006 GE Energy

Incinerator

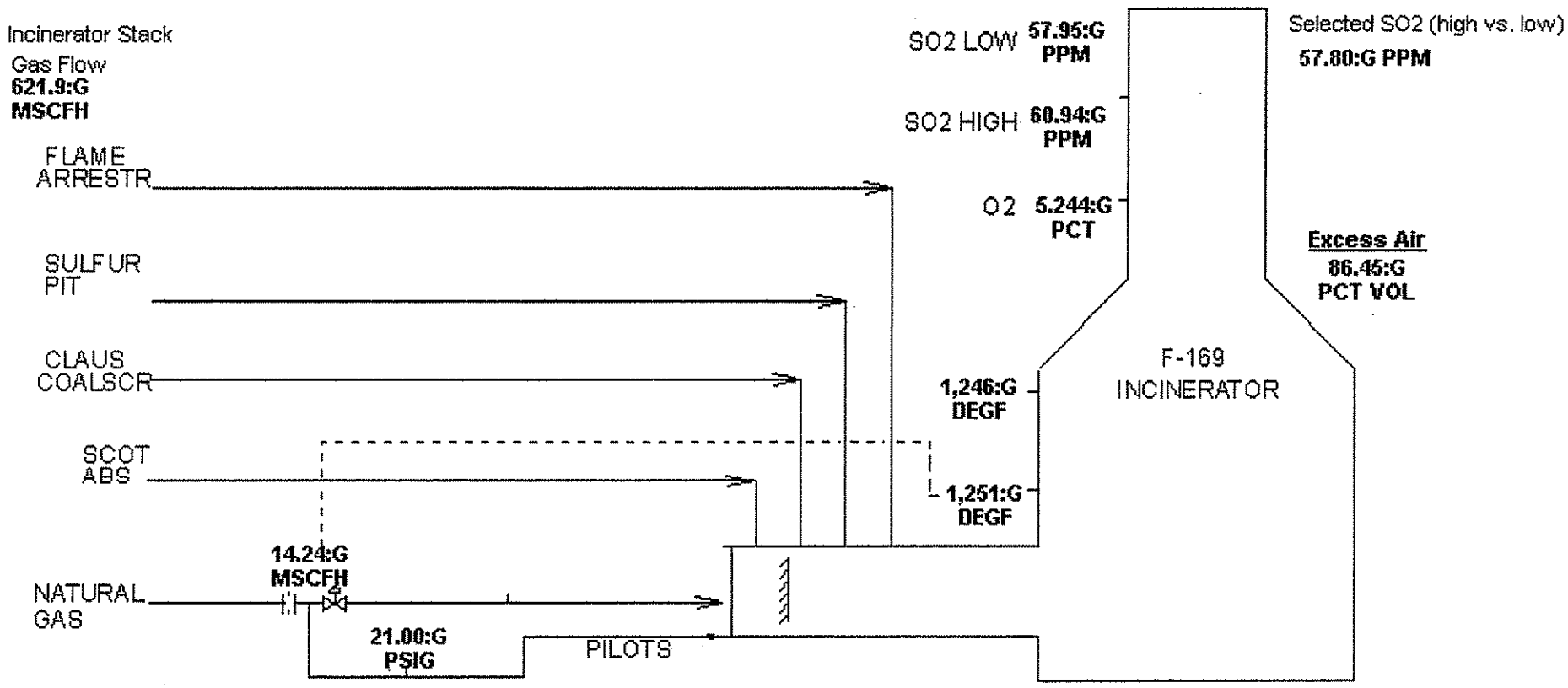

Running Averages

	Mass	State Permit Limit	Conc	Regulatory Limit (Subpart J)
Stack SO2: 12 HR Rolling Avg	3.876:G LB/HR	<33.08	54.95:G PPM	<250

Calculated Rates

	Hourly Mass rate	Concentration Rate
These vaules are calcs	8.420:G lb/hr	80.27:G ppm

use these values as a guide in the event the SO2 analyzer goes out

Thermal Reactor

S2/S3 Modes NORMAL:G

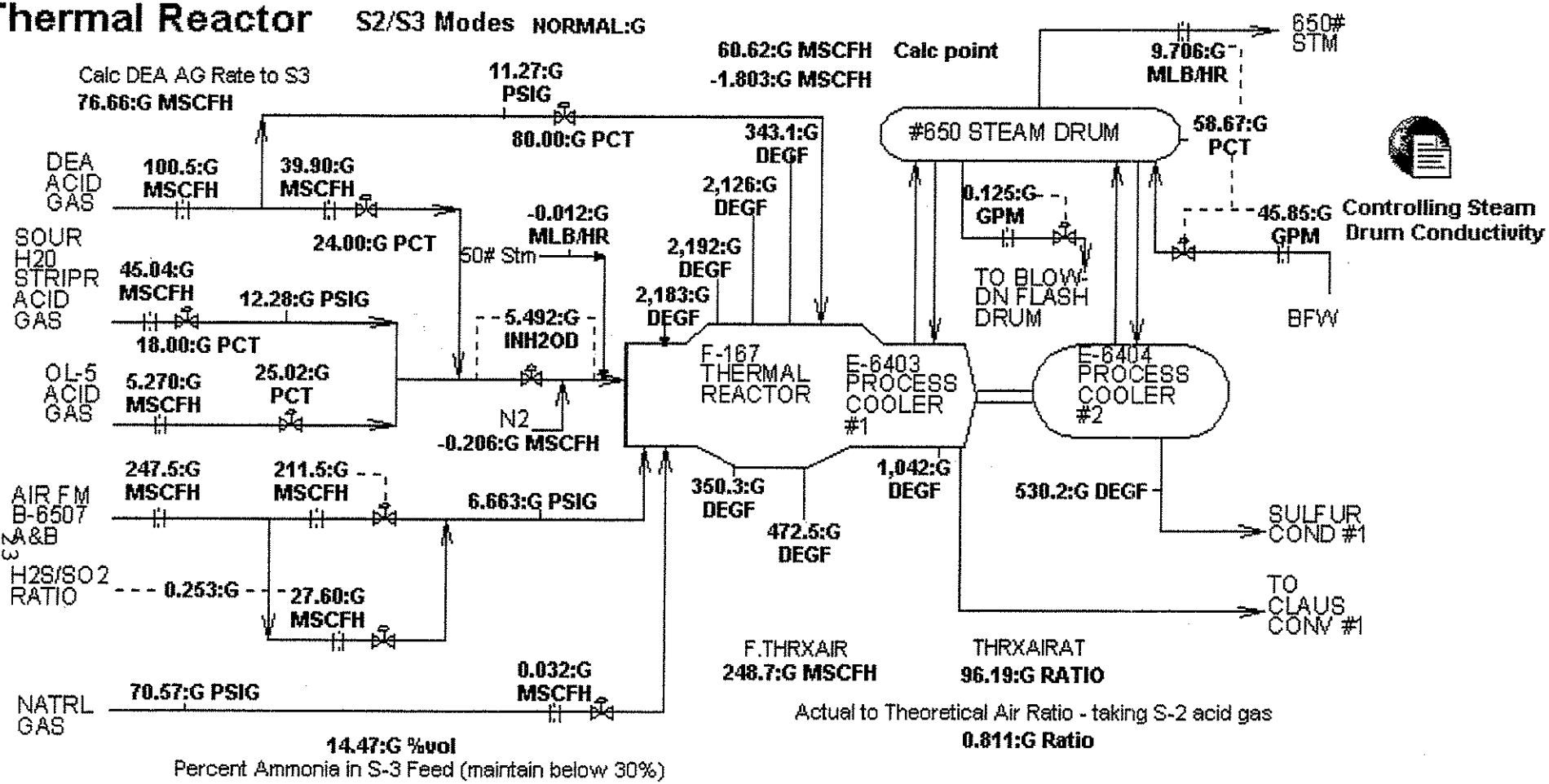

Thermal Reactor Equivalent Load
80.37:G LT/D

Claus Normalized Pressure
9.634:G PSI

Ratio with Natural Gas Only - Hot Sweep
642.1:G

SWS Feed
886.9:G GPM

Total Flow to Thermal Rxtr
397.9:G MSCFH

Total AG Flow to Thermal Rxtr
150.8:G MSCFH

Incinerator

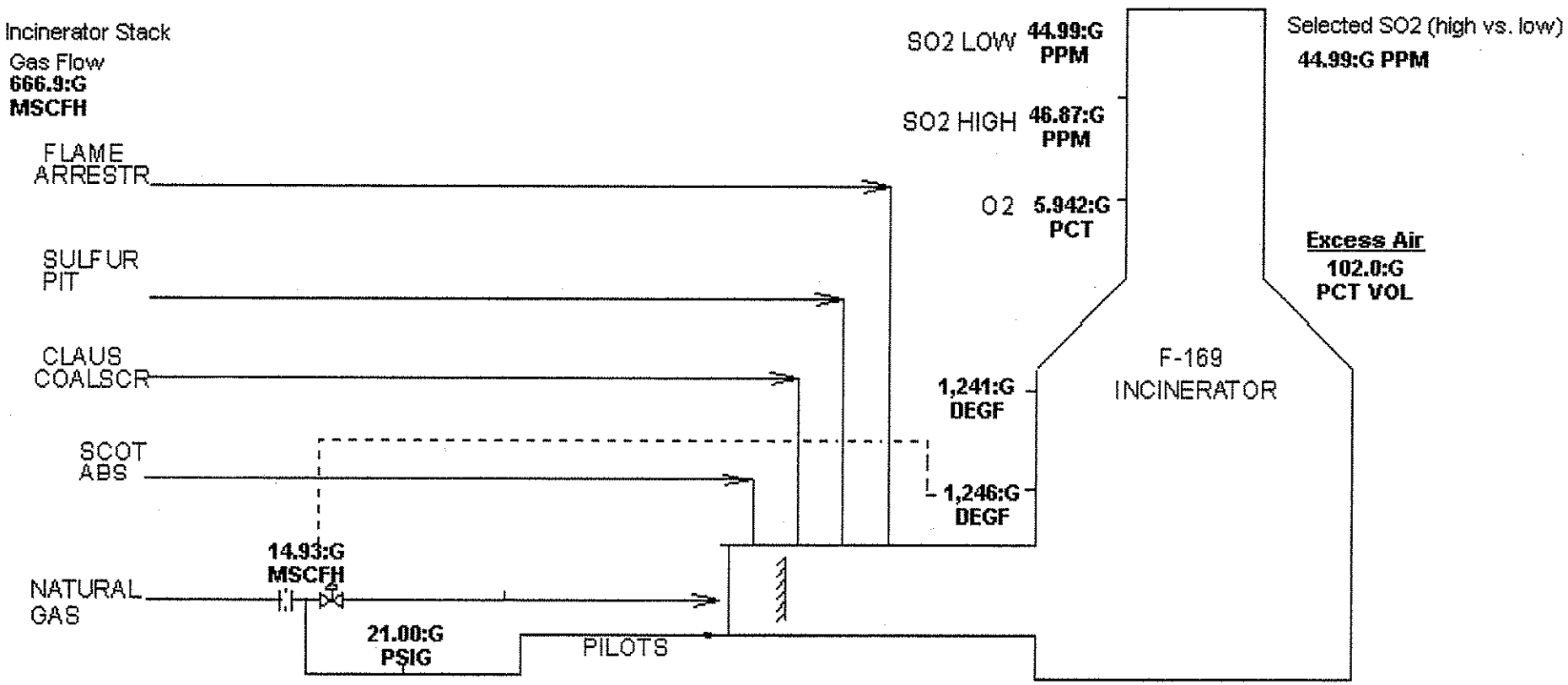

Running Averages

	Mass	State Permit Limit	Conc	Regulatory Limit (Subpart J)
Stack SO2: 12 HR Rolling Avg	3.805:G LB/HR	<33.08	54.23:G PPM	<250

Calculated Rates

	Hourly Mass rate	Concentration Rate
These vaules are calcs	8.688:G lb/hr	77.23:G ppm

use these values as a guide in the event the SO2 analyzer goes out

Thermal Reactor

S2/S3 Modes NORMAL:G

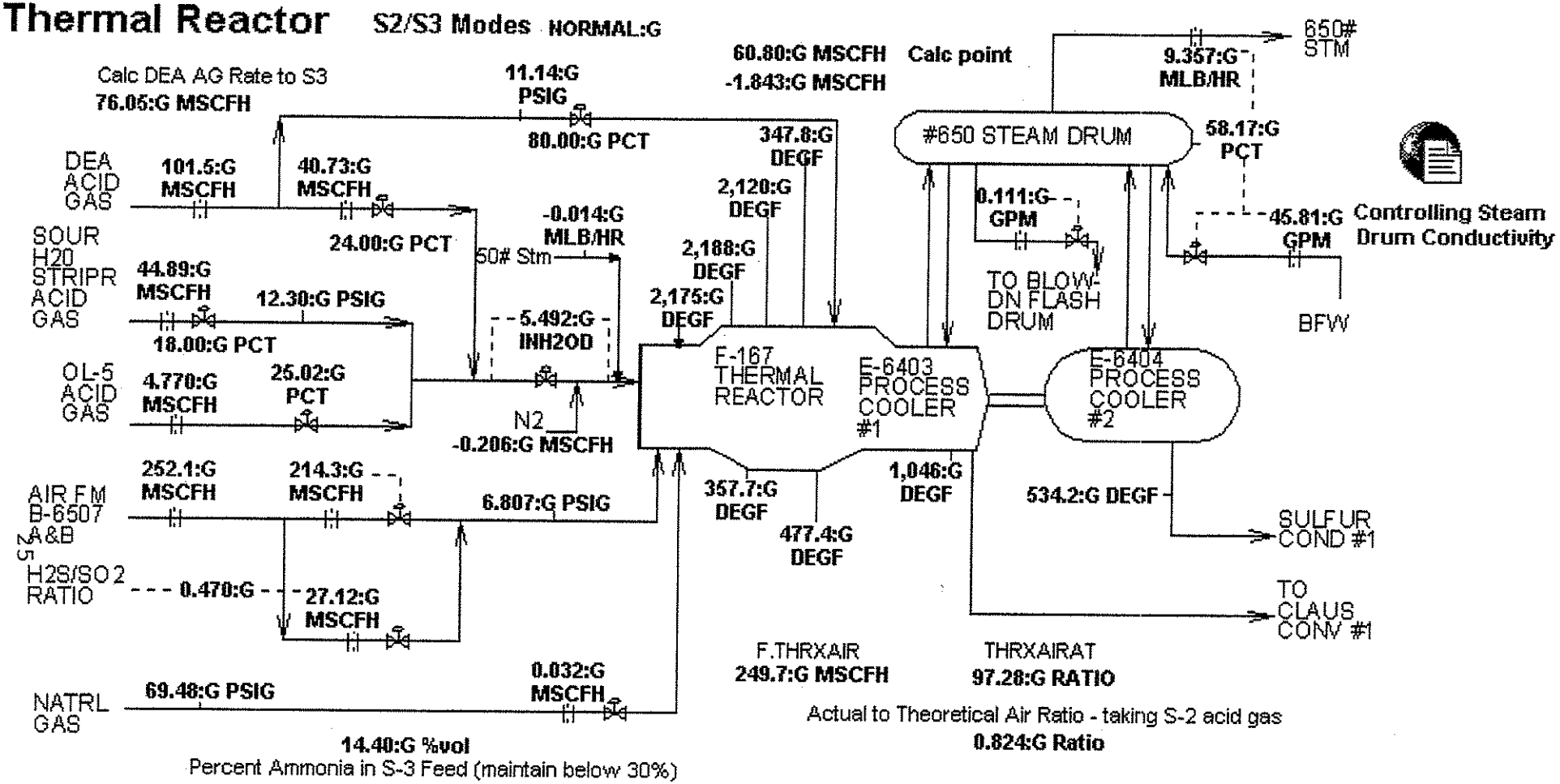

Thermal Reactor Equivalent Load
82.00:G LT/D

Claus Normalized Pressure
9.601:G PSI

Ratio with Natural Gas Only - Hot Sweep
649.0:G

SWS Feed
887.8:G GPM

Total Flow to Thermal Rxtr
402.9:G MSCFH

Total AG Flow to Thermal Rxtr
151.2:G MSCFH

Instrumental Reference Method Field Data

Project Number:	M22E1650	Test Date(s):	March 5, 2008
Customer:	Motiva Enterprises, LLC	Facility:	Norco Refinery
Unit Identification:	Sulfur Plant S3	Recorded by:	J. Hamner
Sample Location:	Incinerator Stack		
RM Probe Type:	Extractive		

RM Analyzer Information			
Pollutant	Manufacturer	Model #	Serial Number
NOx	TECO	42C	42CHL-74547-376
CO	TECO	48C	509110861
O2	Servomex	1440	1420D/3504

Reference Method Initial Linearity Check						
Pollutant	Cal Gas Level	Cal Gas Cylinder Information			Analyzer Response	Linearity Status
		Concentration	Exp Date	ID #		
NOx	Low	0	N/A	ALM038103	0.00	Pass
	Mid	89.66	07/31/08	ALM053192	88.50	Pass
	High	167.6	06/22/08	ALM019237	168.38	Pass
CO	Low	0	N/A	ALM038103	0.00	Pass
	Mid	50.2	06/13/10	ALM057279	50.28	Pass
	High	90.29	04/03/10	ALM011473	90.11	Pass
O2	Low	0	N/A	ALM038103	0.00	Pass
	Mid	12.41	08/26/10	ALM001689	12.55	Pass
	High	21.15	09/28/08	ALM027417	21.15	Pass

© Copyright 2008 GE Energy

Instrumental Reference Method Field Data

Project Number:	M22E1650	Test Dates:	03/05/08
Customer:	Motiva Enterprises, LLC	Facility:	Norco Refinery
Unit Identification:	Sulfur Plant S3	Recorded by:	J. Hamner

		NOx		CO		O2	Volumetric Flow Rate DSCFM	
Calibration Span		167.6		90.29		21.15		
Run Average Raw Analyzer Responses								
Run 1	13:45 - 14:45	22.26		3.38		6.77	12060	
Run 2	15:08 - 16:08	22.57		3.57		6.54	12102	
Run 3	16:31 - 17:31	24.81		4.49		6.46	12074	

System Response to Zero Calibration Gas

	NOx				CO				O2	
	Pre	Post			Pre	Post			Pre	Post
Run 1	0.02	0.07			0.07	0.16			0.08	0.07
Run 2	0.07	0.07			0.16	0.15			0.07	0.10
Run 3	0.07	0.07			0.15	0.16			0.10	0.07

System Response to Upscale Calibration Gas

	NOx				CO				O2	
Cma	89.66				50.2				12.41	
	Pre	Post			Pre	Post			Pre	Post
Run 1	88.73	88.59			50.03	50.12			12.43	12.37
Run 2	88.59	88.24			50.12	50.60			12.37	12.49
Run 3	88.24	88.41			50.60	50.17			12.49	12.36

© Copyright 2008 GE Energy

Project Number:	M22E1650	Test Dates:	03/05/08
Customer:	Motiva Enterprises, LLC	Facility:	Norco Refinery
Unit Identification:	Sulfur Plant S3	Recorded by:	J. Hamner

NOx System Bias and Drift Summary

Run #	Calibration Gas Level	(C_{DIR}) Direct Calibration Error Response	Initial Values		Final Values		Drift (% of span)
			System Response (ppm)	System Bias (% of span)	System Response (ppm)	System Bias (% of span)	
1	Low Level Gas	0.00	0.0	0.0	0.1	0.0	0.0
	Upscale Gas	88.50	88.7	0.1	88.6	0.1	0.1
2	Low Level Gas	0.00	0.1	0.0	0.1	0.0	0.0
	Upscale Gas	88.50	88.6	0.1	88.2	-0.2	0.2
3	Low Level Gas	0.00	0.1	0.0	0.1	0.0	0.0
	Upscale Gas	88.50	88.2	-0.2	88.4	-0.1	0.1

CO System Bias and Drift Summary

Run #	Calibration Gas Level	(C_{DIR}) Direct Calibration Error Response	Initial Values		Final Values		Drift (% of span)
			System Response (ppm)	System Bias (% of span)	System Response (ppm)	System Bias (% of span)	
1	Low Level Gas	0.00	0.1	0.1	0.2	0.2	0.1
	Upscale Gas	50.28	50.0	-0.3	50.1	-0.2	0.1
2	Low Level Gas	0.00	0.2	0.2	0.2	0.2	0.0
	Upscale Gas	50.28	50.1	-0.2	50.6	0.4	0.5
3	Low Level Gas	0.00	0.2	0.2	0.2	0.2	0.0
	Upscale Gas	50.28	50.6	0.4	50.2	-0.1	0.5

O2 System Bias and Drift Summary

Run #	Calibration Gas Level	(C_{DIR}) Direct Calibration Error Response	Initial Values		Final Values		Drift (% of span)
			System Response (%vol)	System Bias (% of span)	System Response (%vol)	System Bias (% of span)	
1	Low Level Gas	0.00	0.1	0.4	0.1	0.3	0.0
	Upscale Gas	12.55	12.4	-0.6	12.4	-0.9	0.3
2	Low Level Gas	0.00	0.1	0.3	0.1	0.5	0.1
	Upscale Gas	12.55	12.4	-0.9	12.5	-0.3	0.6
3	Low Level Gas	0.00	0.1	0.5	0.1	0.3	0.1
	Upscale Gas	12.55	12.5	-0.3	12.4	-0.9	0.6

© Copyright 2008 GE Energy

Calibration Corrected Field Data

Project Number:	M22E1650
Customer:	Motiva Enterprises, LLC
Unit Identification:	Sulfur Plant S3
Sample Location:	Incinerator Stack
RM Probe Type:	Extractive
Test Date(s):	March 5, 2008
Facility:	Norco Refinery
Recorded by:	J. Hamner

Run #	Start Time	End Time	NOx ppmvd	CO ppmvd	O2 % dry
1	13:45	14:45	22.5	3.3	6.7
2	15:08	16:08	22.8	3.4	6.5
3	16:31	17:31	25.1	4.3	6.4
Average			23.5	3.7	6.5

Run #	Start Time	End Time	NOx lb/hr	CO lb/hr	Flow dscfm
1	13:45	14:45	1.9	0.2	12,060
2	15:08	16:08	2.0	0.2	12,102
3	16:31	17:31	2.2	0.2	12,074
Average			2.0	0.2	12,079

© Copyright 2008 GE Energy

3/5/2008	NO-SYS1 PPM	NOX-SYS1 PPM	O2-SYS1 %	CO-SYS1 PPM
13:45	23.03	22.96	6.75	5.31
13:46	23.12	22.98	6.80	5.12
13:47	22.97	23.14	7.03	5.85
13:48	23.09	23.32	7.28	6.05
13:49	23.07	23.14	7.04	4.92
13:50	22.02	22.37	6.90	4.03
13:51	22.49	22.53	7.07	4.22
13:52	22.50	22.62	7.42	4.36
13:53	22.54	22.59	7.02	4.80
13:54	22.35	22.35	6.66	4.57
13:55	21.96	22.19	6.79	4.61
13:56	22.02	22.29	7.23	4.46
13:57	21.99	22.24	7.18	4.26
13:58	21.78	21.97	6.71	3.70
13:59	21.81	22.12	6.61	4.04
14:00	21.86	21.86	6.59	3.89
14:01	21.86	21.93	6.54	3.79
14:02	22.09	22.14	6.51	2.70
14:03	22.15	22.25	6.42	2.05
14:04	21.98	21.98	6.44	1.96
14:05	22.14	22.04	6.49	2.10
14:06	22.16	22.25	6.63	2.47
14:07	22.02	22.20	6.58	2.75
14:08	22.01	22.03	6.76	2.25
14:09	22.14	22.24	7.13	2.80
14:10	22.04	22.28	6.67	2.58
14:11	22.33	22.73	6.68	3.09
14:12	21.97	22.15	7.18	3.12
14:13	22.21	22.44	7.10	3.57
14:14	22.99	23.15	6.89	4.23
14:15	22.61	22.47	6.64	3.68
14:16	22.50	22.37	6.67	3.28
14:17	22.45	22.40	6.63	3.25
14:18	22.14	22.12	6.61	3.05
14:19	22.07	22.06	6.55	2.37
14:20	22.31	22.08	6.53	2.20
14:21	22.68	22.49	6.75	2.99
14:22	22.58	22.43	7.41	2.78
14:23	22.37	22.44	6.76	2.71
14:24	21.95	21.78	7.14	3.10
14:25	22.53	22.56	6.99	3.75
14:26	22.33	22.53	6.75	3.19
14:27	22.08	22.18	6.73	2.89
14:28	21.72	21.82	6.82	2.76
14:29	21.39	21.43	6.89	2.92
14:30	21.77	21.40	6.78	2.67
14:31	21.38	21.72	6.92	3.15
14:32	21.14	21.16	6.92	3.40
14:33	21.61	21.71	6.79	2.72
14:34	21.59	21.64	6.64	3.35
14:35	21.99	22.08	6.61	4.66
14:36	21.88	22.22	6.52	3.12
14:37	22.00	22.21	6.56	3.24
14:38	22.41	22.47	6.64	3.17
14:39	22.42	22.94	6.58	3.11
14:40	22.55	22.68	6.59	2.91
14:41	22.83	22.98	6.59	2.73
14:42	22.29	22.40	6.46	2.67
14:43	21.80	21.75	6.36	2.28
14:44	21.59	21.41	6.36	1.93
14:45	21.59	21.57	6.52	2.38
AVERAGE	22.18	22.26	6.77	3.38

3/5/2008	NO-SYS1 PPM	NOX-SYS1 PPM	O2-SYS1 %	CO-SYS1 PPM
15:08	22.69	22.81	6.30	2.10
15:09	23.46	23.20	6.52	2.83
15:10	23.29	23.53	6.53	3.91
15:11	23.28	23.58	6.52	4.37
15:12	22.91	23.31	6.50	4.24
15:13	22.71	22.99	6.42	3.97
15:14	22.63	22.93	6.40	2.82
15:15	23.36	23.15	6.44	2.86
15:16	23.28	23.40	6.51	3.30
15:17	23.30	23.15	6.42	2.92
15:18	22.73	23.17	6.42	2.62
15:19	23.14	23.14	6.29	2.12
15:20	23.30	23.25	6.34	2.08
15:21	23.38	23.21	6.37	2.10
15:22	23.21	23.35	6.41	1.87
15:23	23.13	23.32	6.36	1.82
15:24	22.24	22.18	6.35	1.72
15:25	22.54	22.61	6.38	1.87
15:26	22.68	22.70	6.22	2.00
15:27	22.61	22.52	6.14	1.81
15:28	22.08	22.30	6.34	1.82
15:29	21.75	21.93	6.48	1.74
15:30	21.55	21.77	6.39	1.69
15:31	21.50	21.62	6.36	1.44
15:32	21.76	21.66	6.36	1.82
15:33	21.82	21.67	6.45	2.46
15:34	21.76	21.73	6.47	2.73
15:35	21.86	21.73	6.44	2.80
15:36	21.74	21.62	6.38	2.52
15:37	21.62	21.73	6.36	1.86
15:38	21.48	21.42	6.38	1.85
15:39	21.61	21.63	6.59	2.33
15:40	21.99	22.09	6.75	2.91
15:41	22.26	22.10	6.75	3.20
15:42	22.16	22.46	6.79	3.36
15:43	22.29	22.37	6.73	3.35
15:44	22.31	22.42	6.77	3.27
15:45	22.25	22.30	6.80	3.49
15:46	22.40	22.57	6.86	3.59
15:47	22.53	22.45	6.95	3.57
15:48	22.75	22.61	6.99	4.18
15:49	22.76	22.97	6.74	4.63
15:50	22.63	23.00	6.60	4.57
15:51	22.75	22.70	6.58	5.03
15:52	22.52	22.66	6.66	5.79
15:53	22.76	22.80	6.65	6.83
15:54	22.72	22.66	6.70	8.23
15:55	22.77	22.97	6.73	8.50
15:56	22.85	22.91	6.74	8.03
15:57	22.76	22.84	6.59	6.03
15:58	22.61	22.66	6.66	5.71
15:59	22.65	22.97	6.69	6.96
16:00	22.72	22.80	6.62	5.17
16:01	22.76	22.65	6.52	4.61
16:02	22.24	22.13	6.48	4.43
16:03	22.25	22.10	6.44	4.82
16:04	22.49	22.57	6.41	4.21
16:05	22.13	22.39	6.35	3.60
16:06	21.83	22.36	6.41	2.62
16:07	22.24	22.32	6.98	3.04
16:08	22.42	22.33	7.39	5.81
AVERAGE	22.50	22.57	6.54	3.57

3/5/2008	NO-SYS1 PPM	NOX-SYS1 PPM	O2-SYS1 %	CO-SYS1 PPM
16:31	24.03	24.20	6.26	4.80
16:32	24.00	23.90	6.55	4.69
16:33	24.46	24.75	6.40	4.78
16:34	24.56	24.48	6.20	3.41
16:35	24.19	24.40	6.22	3.18
16:36	24.25	24.13	6.20	3.27
16:37	24.27	24.24	6.23	3.57
16:38	24.36	24.58	6.31	3.84
16:39	24.19	24.06	6.50	5.04
16:40	24.31	24.59	6.45	5.56
16:41	24.28	24.25	6.43	4.49
16:42	24.33	24.79	6.36	4.54
16:43	23.88	23.99	6.18	3.46
16:44	23.70	23.75	6.19	2.82
16:45	23.92	24.13	6.26	2.97
16:46	23.98	24.23	6.30	4.04
16:47	23.98	24.30	6.43	4.57
16:48	24.17	24.33	6.41	5.03
16:49	24.46	24.25	6.46	5.44
16:50	23.99	23.99	6.41	5.90
16:51	24.19	24.34	6.41	5.69
16:52	24.04	24.45	6.45	5.83
16:53	24.46	24.73	6.42	6.00
16:54	24.30	24.21	6.33	4.58
16:55	24.24	24.23	6.29	3.67
16:56	23.88	24.12	6.26	3.84
16:57	23.96	23.91	6.36	4.89
16:58	24.03	24.07	6.32	4.80
16:59	23.99	24.23	6.29	4.36
17:00	24.44	24.38	6.43	5.25
17:01	24.94	24.73	6.46	5.02
17:02	24.80	25.15	6.46	4.30
17:03	25.20	25.46	6.42	3.54
17:04	24.93	24.97	6.61	3.72
17:05	25.45	25.47	6.71	6.04
17:06	25.91	25.88	6.71	5.89
17:07	25.52	25.71	6.62	5.41
17:08	25.31	25.45	6.65	5.56
17:09	25.22	25.01	6.60	5.19
17:10	25.07	24.99	6.50	4.11
17:11	24.89	24.66	6.55	4.84
17:12	25.08	25.16	6.54	4.65
17:13	25.02	25.41	6.58	4.78
17:14	25.37	25.34	6.52	4.25
17:15	25.07	24.98	6.45	4.09
17:16	24.88	25.07	6.54	3.89
17:17	25.09	25.14	6.47	4.15
17:18	24.96	25.42	6.57	4.36
17:19	25.13	24.95	6.59	4.60
17:20	25.58	25.53	6.63	4.49
17:21	25.27	25.25	6.64	5.15
17:22	25.66	25.45	6.59	4.32
17:23	25.86	25.37	6.60	4.38
17:24	25.64	26.07	6.61	3.95
17:25	25.51	25.67	6.60	3.92
17:26	25.49	25.67	6.63	4.28
17:27	25.52	25.44	6.61	4.11
17:28	25.26	25.59	6.60	4.76
17:29	25.26	25.50	6.54	4.00
17:30	25.20	25.45	6.59	3.73
17:31	25.48	25.38	6.52	4.09
AVERAGE	24.73	24.81	6.46	4.49

3/5/2008	NO-SYS1 PPM	NOX-SYS1 PPM		O2-SYS1 %		CO-SYS1 PPM	
10:56	0.04	0.00		0.05		0.12	
10:57	0.04	0.00		0.05		0.05	
10:58	0.04	0.00	Z	0.05	Z	0.00	Z
10:59	0.03	0.00		0.05		0.00	
11:00	0.04	0.01		0.05		0.01	
11:01	0.05	0.01		0.27		0.04	
11:02	0.06	0.02		0.07		33.92	
11:03	0.08	0.03		0.07		52.82	
11:04	0.09	0.03		0.07		71.94	
11:05	0.09	0.03		0.07		85.35	
11:06	0.09	0.03		0.07		90.11	S
11:07	0.09	0.03		0.07		90.30	
11:08	0.09	0.03		0.06		83.70	
11:09	0.07	0.03		15.68		26.67	
11:10	0.05	0.02		21.06		0.31	
11:11	0.05	0.02		21.15		0.14	
11:12	0.05	0.02		21.15	S	0.13	
11:13	0.05	0.02		21.15		0.13	
11:14	0.06	0.03		13.08		4.12	
11:15	0.07	0.03		0.07		37.65	
11:16	0.07	0.03		0.06		38.67	
11:17	0.07	0.03		0.06		45.47	
11:18	0.07	0.03		0.06		52.11	
11:19	0.07	0.03		0.06		50.28	M
11:20	0.07	0.03		0.06		50.48	
11:21	0.07	0.03		3.84		46.02	
11:22	0.06	0.03		12.58		3.24	
11:23	0.05	0.03		12.55	M	0.43	
11:24	0.05	0.02		12.29		0.39	
11:25	69.76	94.33		0.30		0.24	
11:26	170.25	172.74		0.07		0.13	
11:27	167.23	168.49		0.06		0.10	
11:28	167.07	167.85		0.06		0.10	
11:29	167.32	168.11		0.06		0.10	
11:30	167.46	168.38	S	0.06		0.10	
11:31	166.91	168.31		0.05		0.12	
11:32	154.97	161.89		0.08		0.34	
11:33	92.33	95.61		0.06		0.06	
11:34	87.97	88.56		0.06		0.09	
11:35	87.98	88.50	M	0.06		0.05	
11:36	87.85	88.40		0.06		0.05	
11:37	87.81	88.37		0.06		0.00	

3/5/2008	NO-SYS1 PPM	NOX-SYS1 PPM		O2-SYS1 %		CO-SYS1 PPM	
12:43	0.14	0.04		0.09		0.08	
12:44	0.07	0.02	Z	0.08	Z	0.07	Z
12:45	0.08	0.01		0.08		0.09	
12:46	0.08	0.02		0.10		35.73	
12:47	0.09	0.03		0.09		53.16	
12:48	0.08	0.06		0.08		53.23	
12:49	0.09	0.02		0.09		50.30	M
12:50	0.09	0.02		0.08		50.20	
12:51	0.09	0.02		0.08		47.49	
12:52	0.08	0.02		0.07		3.86	
12:53	0.08	0.02		0.07		0.06	
12:54	0.08	0.02		0.07		0.05	
12:55	0.07	0.01		0.07		0.03	
12:56	0.07	0.02		0.07		0.03	
12:57	38.86	28.29		0.08		0.07	
12:58	86.62	86.71		0.07		0.11	
12:59	88.19	88.67		0.07		0.11	
13:00	88.19	88.73	M	0.07		0.07	
13:01	88.25	88.76		0.07		0.08	
13:02	49.90	61.27		0.07		0.12	
13:03	0.36	0.40		0.06		0.11	
13:04	0.27	0.09		0.07		0.11	
13:05	0.08	0.03		0.07		0.11	
13:06	0.08	0.03		0.30		0.10	
13:07	0.08	0.03		12.52		0.25	
13:08	0.08	0.04		12.95		0.36	
13:09	0.08	0.03		12.80		0.41	
13:10	0.08	0.04		12.94		0.38	
13:11	0.08	0.04		12.94		0.40	
13:12	0.08	0.03		12.55		0.36	
13:13	0.08	0.04		12.58		0.39	
13:14	0.09	0.03		1.74		0.20	
13:15	0.09	0.03		0.10		0.00	
13:16	0.09	0.03		0.09		0.00	
13:17	0.09	0.03		0.08		0.01	
13:18	0.09	0.03		1.92		0.02	
13:19	0.09	0.03		12.58		0.27	
13:20	0.09	0.03		12.44		0.33	
13:21	0.09	0.03		12.43	M	0.32	
13:22	0.09	0.03		12.43		0.38	
13:23	0.09	0.03		2.94		0.22	
13:24	0.10	0.02		0.09		0.02	
13:25	0.09	0.03		0.08		0.00	

3/5/2008	NO-SYS1 PPM	NOX-SYS1 PPM		O2-SYS1 %		CO-SYS1 PPM	
14:46	21.96	20.95		4.12		3.29	
14:47	2.06	2.23		0.08		0.40	
14:48	0.06	0.07		0.07		0.14	
14:49	0.07	0.06		0.07		0.17	
14:50	0.04	0.07	Z	0.07	Z	0.16	Z
14:51	64.60	64.35		0.07		0.16	
14:52	86.72	87.16		0.07		0.16	
14:53	88.00	88.41		0.07		0.16	
14:54	88.19	88.59		1.16		0.18	
14:55	37.14	30.81		12.29		0.42	
14:56	0.29	0.30		12.37	M	0.45	
14:57	0.26	0.16		12.41		0.47	
14:58	4.53	0.30		3.10		19.47	
14:59	0.05	0.07		0.10		49.91	
15:00	0.06	0.07		0.09		49.11	
15:01	0.06	0.07		0.08		50.12	M
15:02	0.16	0.07		0.08		50.16	

3/5/2008	NO-SYS1 PPM	NOX-SYS1 PPM		O2-SYS1 %		CO-SYS1 PPM	
16:09	22.41	22.36		7.14		6.53	
16:10	22.59	22.87		6.97		5.94	
16:11	18.44	19.29		3.07		6.81	
16:12	0.68	0.30		0.11		0.76	
16:13	0.06	0.07		0.10		0.15	
16:14	0.06	0.07	Z	0.10	Z	0.15	Z
16:15	0.06	0.07		0.11		22.28	
16:16	0.07	0.07		0.10		50.49	
16:17	0.06	0.07		0.10		50.60	M
16:18	0.07	0.07		0.09		50.66	
16:19	2.85	1.25		0.08		43.58	
16:20	81.93	72.95		0.07		1.89	
16:21	87.77	88.18		0.07		0.26	
16:22	87.88	88.24	M	0.07		0.21	
16:23	57.65	47.68		10.66		0.34	
16:24	0.36	0.37		12.43		0.47	
16:25	0.26	0.25		12.49	M	0.50	

3/5/2008	NO-SYS1 PPM	NOX-SYS1 PPM		O2-SYS1 %		CO-SYS1 PPM	
17:32	24.65	25.69		5.40		4.64	
17:33	3.42	3.42		0.08		0.70	
17:34	0.05	0.07		0.07		0.20	
17:35	0.03	0.08		0.07		0.17	
17:36	0.06	0.07	Z	0.07	Z	0.16	Z
17:37	32.59	22.85		0.07		0.21	
17:38	87.66	88.01		0.07		0.17	
17:39	87.96	88.41	M	0.07		0.18	
17:40	88.03	88.47		0.07		0.97	
17:41	24.08	25.78		0.07		41.99	
17:42	0.28	0.30		0.06		50.36	
17:43	0.27	0.22		0.06		50.17	M
17:45	0.06	0.07		12.35		0.68	
17:46	0.06	0.07		12.36	M	0.53	

METHOD 2 VOLUMETRIC FLOW DATA

Project No:	M22E1650		
Company:	Motiva Enterprises, LLC	**Run No.:**	1
Plant:	Norco Refinery	**Date:**	3/5/2008
Source:	Sulfur Plant S3 Incinerator Stack	**Start Time:**	13:55
Source Condition:	Normal	**End Time:**	14:05
Pitot ID:	900A	**RM Testers:**	J. Hamner
Pitot Coefficient:	0.823		

Test Parameters	
P_{bar} - Barometric pressure, inches Hg	29.82
P_g - Stack Pressure, inches of H_2O	-0.30
P_s - Absolute stack pressure, inches Hg	29.80
t_s - Average stack temperature, °F	1268.4
% CO_2	10.8
% O_2	6.6
% N_2	82.6
Md - dry basis lb/lb mole	29.992
Ms - wet basis lb/lb mole	28.157
Stack Diameter, Feet	9.92
Cross Sectional Area of Stack, Ft^2	77.24
Bws - Moisture content fraction	0.153

Moisture Determination	
Method Used:	4 (Alt)
Meter Calibration:	1.015
Initial Meter Volume (cf):	361.73
Final Meter Volume (cf):	364.93
Meter Temperature, deg F:	74.00
Meter Volume Vm(std):	3.201
Meter Volume Vw(std):	0.580
Delta H:	0.08
Train Initial Weight, g:	549.100
Train Final Weight, g:	561.400
Condensate Initial Vol, mL:	0.000
Condensate Final Vol, mL:	0.000

Port	Point	DP (in. H_2O)	Sqrt. DP	Temp (°F)	Velocity (V)
A	01	0.01	0.1000	1264	10.09
A	02	0.01	0.1000	1270	10.10
A	03	0.01	0.1000	1271	10.11
A	04	0.01	0.1000	1273	10.11
A	05	0.01	0.1000	1271	10.11
A	06	0.01	0.1000	1269	10.10
A	07	0.01	0.1000	1264	10.09
A	08	0.01	0.1000	1263	10.08
B	01	0.01	0.1000	1265	10.09
B	02	0.01	0.1000	1269	10.10
B	03	0.01	0.1000	1273	10.11
B	04	0.01	0.1000	1274	10.11
B	05	0.01	0.1000	1270	10.10
B	06	0.01	0.1000	1268	10.10
B	07	0.01	0.1000	1266	10.09
B	08	0.01	0.1000	1265	10.09

Port	Point	DP (in. H_2O)	Sqrt. DP	Temp (°F)	Velocity (V)

Method 2 Results	
Average DP	0.0100
Average SqrtDP	0.1000
Average Velocity Vs (ft/sec)	10.10
Q - ACFM	46,801
Qsd - DSCFM	12,060
Qs - SCFM	14,238
Qs - SCFH	854,303

© Copyright 2007 GE Energy

METHOD 2 VOLUMETRIC FLOW DATA

Project No:	M22E1650		
Company:	Motiva Enterprises, LLC	**Run No.:**	2
Plant:	Norco Refinery	**Date:**	3/5/2008
Source:	Sulfur Plant S3 Incinerator Stack	**Start Time:**	15:25
Source Condition:	Normal	**End Time:**	15:40
Pitot ID:	900A	**RM Testers:**	J. Hamner
Pitot Coefficient:	0.823		

Test Parameters	
P_{bar} - Barometric pressure, inches Hg	29.82
P_g - Stack Pressure, inches of H_2O	-0.30
P_s - Absolute stack pressure, inches Hg	29.80
t_s - Average stack temperature, °F	1267.2
% CO_2	10.9
% O_2	5.8
% N_2	83.3
Md - dry basis lb/lb mole	29.976
Ms - wet basis lb/lb mole	28.180
Stack Diameter, Feet	9.92
Cross Sectional Area of Stack, Ft^2	77.24
Bws - Moisture content fraction	0.150

Moisture Determination	
Method Used:	4 (Alt)
Meter Calibration:	1.015
Initial Meter Volume (cf):	365.42
Final Meter Volume (cf):	367.64
Meter Temperature, deg F:	74.70
Meter Volume Vm(std):	2.218
Meter Volume Vw(std):	0.391
Delta H:	0.08
Train Initial Weight, g:	553.80
Train Final Weight, g:	562.10
Condensate Initial Vol, mL:	0.00
Condensate Final Vol, mL:	0.00

Port	Point	DP (in. H_2O)	Sqrt. DP	Temp (°F)	Velocity (V)
A	**01**	0.01	0.1000	1263	10.08
A	**02**	0.01	0.1000	1268	10.09
A	**03**	0.01	0.1000	1270	10.10
A	**04**	0.01	0.1000	1271	10.10
A	**05**	0.01	0.1000	1272	10.10
A	**06**	0.01	0.1000	1270	10.10
A	**07**	0.01	0.1000	1267	10.09
A	**08**	0.01	0.1000	1265	10.08
B	**01**	0.01	0.1000	1264	10.08
B	**02**	0.01	0.1000	1266	10.09
B	**03**	0.01	0.1000	1269	10.10
B	**04**	0.01	0.1000	1271	10.10
B	**05**	0.01	0.1000	1270	10.10
B	**06**	0.01	0.1000	1264	10.08
B	**07**	0.01	0.1000	1263	10.08
B	**08**	0.01	0.1000	1262	10.08

Port	Point	DP (in. H_2O)	Sqrt. DP	Temp (°F)	Velocity (V)

Method 2 Results	
Average DP	0.0100
Average SqrtDP	0.1000
Average Velocity Vs (ft/sec)	10.09
Q - ACFM	46,766
Qsd - DSCFM	12,102
Qs - SCFM	14,238
Qs - SCFH	854,273

© Copyright 2007 GE Energy

METHOD 2 VOLUMETRIC FLOW DATA

Project No:	M22E1650		
Company:	Motiva Enterprises, LLC	**Run No.:**	3
Plant:	Norco Refinery	**Date:**	3/5/2008
Source:	Sulfur Plant S3 Incinerator Stack	**Start Time:**	16:45
Source Condition:	Normal	**End Time:**	17:00
Pitot ID:	900A	**RM Testers:**	J. Hamner
Pitot Coefficient:	0.823		

Test Parameters	
P_{bar} - Barometric pressure, inches Hg	29.82
P_g - Stack Pressure, inches of H_2O	-0.30
P_s - Absolute stack pressure, inches Hg	29.80
t_s - Average stack temperature, °F	1266.7
% CO_2	10.6
% O_2	6.3
% N_2	83.1
Md - dry basis lb/lb mole	29.948
Ms - wet basis lb/lb mole	28.120
Stack Diameter, Feet	9.92
Cross Sectional Area of Stack, Ft^2	77.24
Bws - Moisture content fraction	0.153

Moisture Determination	
Method Used:	4 (Alt)
Meter Calibration:	1.015
Initial Meter Volume (cf):	368.02
Final Meter Volume (cf):	370.11
Meter Temperature, deg F:	75.00
Meter Volume Vm(std):	2.087
Meter Volume Vw(std):	0.377
Delta H:	0.08
Train Initial Weight, g:	553.90
Train Final Weight, g:	561.90
Condensate Initial Vol, mL:	0.00
Condensate Final Vol, mL:	0.00

Port	Point	DP (in. H_2O)	Sqrt. DP	Temp (°F)	Velocity (V)
A	01	0.01	0.1000	1264	10.09
A	02	0.01	0.1000	1265	10.10
A	03	0.01	0.1000	1268	10.10
A	04	0.01	0.1000	1270	10.11
A	05	0.01	0.1000	1269	10.11
A	06	0.01	0.1000	1265	10.10
A	07	0.01	0.1000	1264	10.09
A	08	0.01	0.1000	1263	10.09
B	01	0.01	0.1000	1263	10.09
B	02	0.01	0.1000	1265	10.10
B	03	0.01	0.1000	1268	10.10
B	04	0.01	0.1000	1271	10.11
B	05	0.01	0.1000	1272	10.12
B	06	0.01	0.1000	1268	10.10
B	07	0.01	0.1000	1267	10.10
B	08	0.01	0.1000	1265	10.10

Port	Point	DP (in. H_2O)	Sqrt. DP	Temp (°F)	Velocity (V)

Method 2 Results	
Average DP	0.0100
Average SqrtDP	0.1000
Average Velocity Vs (ft/sec)	10.10
Q - ACFM	46,808
Qsd - DSCFM	12,074
Qs - SCFM	14,255
Qs - SCFH	855,302

© Copyright 2007 GE Energy

PITOT TRAVERSE DATA

Project: Motiva Norco M22E1650

Location: S3 Stack

Date: 03-05-09 Test No: 1 Time: 13:55 - 14:05

Point No.	ΔP	$\sqrt{\Delta P}$	t_s	α	Point No.	ΔP	$\sqrt{\Delta P}$	t_s	α
1-1	.01		1264						
2	.01		1270						
3	.01		1271						
4	.01		1273						
5	.01		1271						
6	.01		1269						
7	.01		1264						
8	.01		1263						
2-1	.01		1265						
2	.01		1269						
3	.01		1273						
4	.01		1274						
5	.01		1270						
6	.01		1268						
7	.01		1266						
8	.01		1265						

Dia - 9'11"
77.236

Preliminary Velocity Calculation (This data has not been peer reviewed and may not be accurate)

P_{bar} 29.72 "Hg Static -.3 "H_2O P_g ____ "Hg P_s ____ "Hg Pitot ID 900A C_p .823 Temp. ID ____

0.44 × 10.8 %CO_2 = ____ $\sqrt{\Delta P}$ ____ t_s ____ °F T ____ °R Flue Area ____ ft^2

0.32 × 6.6 %O_2 = + ____ Duct Dimensions ____

0.28 × ____ %N_2 = + ____ B_{ws} ____ 1 - B_{ws} ____ Disturbance: Upstream ____

(____ Md × ____ 1-Bws) + (18 × ____ Bws) = ____ (Ms) Downstream ____

$$v_s = 85.49 \times ____ Cp \times \sqrt{\frac{(_____)Ts\ °R}{____ Ms \times ____ Ps}} \times ____ \sqrt{\Delta P} = ____ ft/sec(Vs)$$

Q_{acfm} = ____ Vs × ____ Flue Area × 60 = 46,829 acfm Port Length ____ Inches

$Q_{scfm} = 17.647 \times ACFM \times \frac{Ps}{Ts\ °R}$ = 14,247 SCFM 854,820

$Q_{dscfm} = 17.647 \times ACFM \times \frac{Ps}{Ts\ °R} \times (1\text{-}Bws)$ = 12,067 DSCFM

Pre-test leak check ✓ "H_2O

Post-test leak check ✓ "H_2O Data Taken By: J Hamner

Form 1012

GE Energy

PITOT TRAVERSE DATA

Project: Mohave Nox-co M22E1650

Location: S3 Stack

Date: 03-05-08 Test No: 2 Time: 1525 1540

CHECKED BY JPM 3-5-08

Point No.	ΔP	√ΔP	t_s	α	Point No.	ΔP	√ΔP	t_s	α
1-1	.01		1263						
2	.01		1268						
3	.01		1270						
4	.01		1271						
5	.01		1272						
6	.01		1270						
7	.01		1267						
8	.01		1265						
2-1	.01		1264						
2	.01		1266						
3	.01		1269						
4	.01		1271						
5	.01		1270						
6	.01		1264						
7	.01		1263						
8	.01		1262						

Preliminary Velocity Calculation (This data has not been peer reviewed and may not be accurate)

P_{bar} 29.82 "Hg Static ~.3 "H_2O P_g ____ "Hg P_s ____ "Hg Pitot ID 900A C_p .823 Temp. ID ____

0.44 × 10.9 %CO_2 = ____ $\sqrt{\Delta P}$ ____ t_s ____ °F T ____ °R Flue Area ____ ft^2

0.32 × 5.8 %O_2 = + ____ Duct Dimensions ____

0.28 × ____ %N_2 = + ____ B_{ws} ____ 1 - B_{ws} ____ Disturbance: Upstream ____

(____ Md × ____ 1-Bws) + (18 × ____ Bws) = ____ (Ms) Downstream ____

$$v_s = 85.49 \times ____ Cp \times \sqrt{\frac{(____)Ts\ °R}{____ Ms \times ____ Ps}} \times ____ \sqrt{\Delta P} = ____ ft/sec(Vs)$$

Q_{acfm} = ____ Vs × ____ Flue Area × 60 = 46,794 acfm Port Length ____ Inches

$Q_{scfm} = 17.647 \times ACFM \times \frac{Ps}{Ts\ °R}$ = 14,246 SCFM 854,796

$Q_{dscfm} = 17.647 \times ACFM \times \frac{Ps}{Ts\ °R} \times (1\text{-}Bws)$ = 12,110 DSCFM

Pre-test leak check ✓ "H_2O

Post-test leak check ✓ "H_2O

Data Taken By: J Hannon

Form 1012

GE Energy

PITOT TRAVERSE DATA

Project: Norco Motiva M22E1680

Location: S3 Stack

Date: 03-05-08 Test No: 3 Time: 16:45-17:00

Point No.	ΔP	$\sqrt{\Delta P}$	t_s	α	Point No.	ΔP	$\sqrt{\Delta P}$	t_s	α
1-1	.01		1264						
2	.01		1265						
3	.01		1268						
4	.01		1270						
5	.01		1269						
6	.01		1265						
7	.01		1264						
8	.01		1263						
2-1	.01		1263						
2	.01		1265						
3	.01		1268						
4	.01		1271						
5	.01		1272						
6	.01		1268						
7	.01		1267						
8	.01		1265						

Preliminary Velocity Calculation (This data has not been peer reviewed and may not be accurate)

P_{bar} 29.82 "Hg Static -.3 "H_2O P_g ____ "Hg P_s ____ "Hg Pitot ID 900A C_p .825 Temp. ID ____

0.44 × 10.6 %CO_2 = ____ $\sqrt{\Delta P}$ ____ t_s ____ °F T ____ °R Flue Area ____ ft^2

0.32 × 6.3 %O_2 = + ____ Duct Dimensions ____

0.28 × ____ %N_2 = + ____ B_{ws} ____ 1 - B_{ws} ____ Disturbance: Upstream ____

(____ Md × ____ 1-Bws) + (18 × ____ Bws) = ____ (Ms) Downstream ____

$$v_s = 85.49 \times ____ Cp \times \sqrt{\frac{(_____)Ts\ °R}{____ Ms \times ____ Ps}} \times ____ \sqrt{\Delta P} = ____ ft/sec(Vs)$$

Q_{acfm} = ____ Vs × ____ Flue Area × 60 = 46,837 acfm Port Length ____ Inches

$Q_{scfm} = 17.647 \times ACFM \times \frac{Ps}{Ts\ °R}$ = 14,264 SCFM 855,819

$Q_{dscfm} = 17.647 \times ACFM \times \frac{Ps}{Ts\ °R} \times (1\text{-}Bws)$ = 12,081 DSCFM

Pre-test leak check ✓ "H_2O

Post-test leak check ✓ "H_2O Data Taken By: J Hamner

Form 1012

GE Energy

MOISTURE FIELD DATA SHEET

Project: Motiva Novco M22E1650 Date: 03-05-08
Sampling Location: SJ
Source Condition: Normal Monitor: Model F15
Dry Gas Meter No. F15 Y = 1.015 Serial No. F15

Test (Run) No. 1 Barometric Pressure (P_{bar}) 29.82 in. Hg
Gas Temperature °F Static Pressure -.3 in. Hg
Orsat Analysis: 10.8 %CO_2 5.6 %O_2

Clock Time 24 hour	Meter Volume (V_m) ft^3	Meter Gage Pressure (ΔH) in. H_2O	Meter Temp. (t_m) °F	Impgr. Outlet Temp °F
1355	361.73	.08	74	Fully
1400	362.21	.08	74	Iced
1405	362.68	.08	74	
1412	363.38	.08	74	
1415	363.82	.08	74	
1420	364.33	.08	74	
1425	364.93	.08	74	
Avg.			74 (T_m)	°R

Condensate: _____ mls (V_f); - _____ mls (V_i); _____ mls; × 0.04707 = _____ ft^3 [$V_{wc(std)}$]

Silica Gel or Train: 561.4 grams (W_f); - 549.1 grams (W_i); _____ grams; × 0.04715 = _____ ft^3 [$V_{wsg(std)}$]

_____ ft^3 [$V_{wc(std)}$] + _____ ft^3 [$V_{wsg(std)}$] = _____ ft^3 [$V_{w(std)}$]

$V_{m(std)}$ = _____ ft^3

Water Vapor, proportion by volume

Leak Check: .00015 .00015

B_{ws} = _____

Moisture correction factor: $1 - B_{ws}$ = _____

Comments:

Test (Run) No. 2 Barometric Pressure (P_{bar}) 29.82 in. Hg
Gas Temperature °F Static Pressure -.3 in. Hg
Orsat Analysis: 10.9 %CO_2 5.8 %O_2

Clock Time 24 hour	Meter Volume (V_m) ft^3	Meter Gage Pressure (ΔH) in. H_2O	Meter Temp. (t_m) °F	Impgr. Outlet Temp °F
1525	365.42	.08	74	Fully
1530	365.67	.08	74	Iced
1535	366.[illegible]0	.08	75	
1540	366.41	.08	75	
1545	366.52	.08	75	
1550	366.[illegible]8	.08	75	
1555	36[illegible].64	.08	75	
Avg.			74.7 (T_m)	°R

marks by JPH 3-5-08

Condensate: _____ mls (V_f); - _____ mls (V_i); _____ mls; × 0.04707 = _____ ft^3 [$V_{wc(std)}$]

Silica Gel or Train: 562.1 grams (W_f); - 553.8 grams (W_i); _____ grams; × 0.04715 = _____ ft^3 [$V_{wsg(std)}$]

_____ ft^3 [$V_{wc(std)}$] + _____ ft^3 [$V_{wsg(std)}$] = _____ ft^3 [$V_{w(std)}$]

$V_{m(std)}$ = _____ ft^3

Water Vapor, proportion by volume

Leak Check: .00015 .00015

B_{ws} = _____

Moisture correction factor: $1 - B_{ws}$ = _____

Comments:

$$V_{m(std)} = 17.64\, V_m Y \frac{P_{bar} + \frac{DH}{13.6}}{T_m}$$

$$B_{ws} = \frac{V_{w(std)}}{V_{w(std)} + V_{m(std)}}$$

Operator J Hamner

MOISTURE FIELD DATA SHEET

Project: Motiva No-co M22E1650 Date: 03-05-07
Sampling Location: S3
Source Condition: Normal Monitor: Model VE 15
Dry Gas Meter No. F15 Y = 1.015 Serial No. VE 15

Test (Run) No. 3 Barometric Pressure (P_{bar}) 29.82 in. Hg
Gas Temperature °F Static Pressure -.3 in. Hg

Orsat Analysis: 10.6 %CO_2 6.3 %O_2

Clock Time 24 hour	Meter Volume (V_m) ft^3	Meter Gage Pressure (ΔH) in. H_2O	Meter Temp. (t_m) °F	Impgr. Outlet Temp °F
16:40	368.02	.08	75	Fully
16:45	368.14	.08	75	Iced
16:50	368.45	.08	75	
16:55	368.72	.08	75	
17:00	369.33	.08	75	
17:05	369.64	.08	75	
17:10	370.11	.08	75	
Avg.			75 (T_m)	°R

Condensate
_____ mls (V_f)
- _____ mls (V_i)
_____ mls
× 0.04707 = _____
_____ ft^3 [$V_{wc(std)}$] + _____ ft^3 [$V_{wsg(std)}$]

Silica Gel or Train
561.9 grams (W_f)
- 553.9 grams (W_i)
_____ grams
× 0.04715 = _____
= _____ ft^3 [$V_{w(std)}$]

$V_{m(std)}$ = _____ ft^3

Water Vapor, proportion by volume

Leak Check:
.000/15
.000/15

B_{ws} = _____

Moisture correction factor:
$1 - B_{ws}$ = _____

Comments:

Test (Run) No. _____ Barometric Pressure (P_{bar}) _____ in. Hg
Gas Temperature °F Static Pressure in. Hg

Orsat Analysis: _____ %CO_2 _____ %O_2

Clock Time 24 hour	Meter Volume (V_m) ft^3	Meter Gage Pressure (ΔH) in. H_2O	Meter Temp. (t_m) °F	Impgr. Outlet Temp °F
Avg.			(T_m)	°R

Condensate
_____ mls (V_f)
- _____ mls (V_i)
_____ mls
× 0.04707 = _____
_____ ft^3 [$V_{wc(std)}$] + _____ ft^3 [$V_{wsg(std)}$]

Silica Gel or Train
_____ grams (W_f)
- _____ grams (W_i)
_____ grams
× 0.04715 = _____
= _____ ft^3 [$V_{w(std)}$]

$V_{m(std)}$ = _____ ft^3

Water Vapor, proportion by volume

Leak Check:

B_{ws} = _____

Moisture correction factor:
$1 - B_{ws}$ = _____

Comments:

$$V_{m(std)} = 17.64\, V_m Y \frac{P_{bar} + \frac{DH}{13.6}}{T_m}$$

$$B_{ws} = \frac{V_{w(std)}}{V_{w(std)} + V_{m(std)}}$$

Operator J Flamm

CALIBRATION PROCEDURES

PITOT TUBES

The pitot tubes used during this test program are fabricated according to the specification described and illustrated in the *Code of Federal Regulations*, Title 40, Part 60, Appendix A, Methods 1 through 5 as published in the *Federal Register*, Volume 42, No. 160; hereafter referred to by the appropriate method number. The pitot tubes comply with the alignment specifications in Method 2, Section 4; and the pitot tube assemblies are in compliance with specifications in the same section.

Pitot tube assemblies are calibrated in accordance with Method 2, Section 4, against a standard hemispherical pitot utilizing a wind tunnel meeting the specification in Method 2, Section 4.1.2.

TEMPERATURE SENSING DEVICES

The potentiometer and thermocouples are calibrated against a mercury thermometer in a calibration well. Alternatively, readings are checked utilizing a NBS traceable millivolt source.

DRY GAS METERS

The test meters are calibrated according to Method 5, Section 5.3 and "Procedures for Calibrating and Using Dry Gas Volume Meters as Calibration Standards" by P.R. Westlin and R.T. Shigehara, March 10, 1978.

ANALYTICAL BALANCE

The accuracy of the analytical balance is checked with Class S, Stainless Steel Type 303 weights manufactured by F. Hopken and Son, Jersey City, New Jersey.

TYPE S PITOT TUBE INSPECTION DATA FORM

Field Inspection Form

Pitot tube assembly level? ✓ yes ____ no

Pitot tube openings damaged? ____ yes (explain below) ✓ no

α_1 = 1 ° (<10°), α_2 = 1 ° (<10°) z = A sin γ = 0.0244 (in.); (<0.125 in.)

β_1 = 1 ° (<5°), β_2 = 0 ° (<5°) w = A sin θ = 0.0244 (in.); (<0.03125 in.)

γ = 2 °, θ = 2 °, A = 0.7 (in.) P_A = 0.352 (in.), P_B = 0.352 (in.), D_t = 0.250 (in.)

Comments: 10' Blast Furnace Probe used at S3 incinerator stack on March 5, 2008

Calibration required? ____ yes ✓ no

Pitot Tube No.: 900 Date: 3/3/08 Name: Jeff Daniels / John Hamer

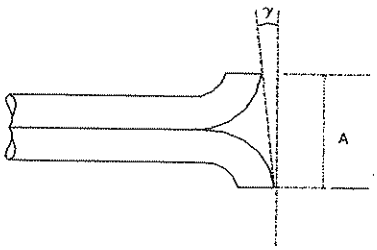

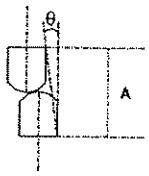

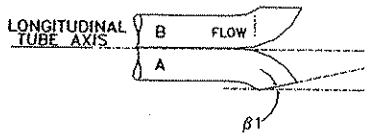

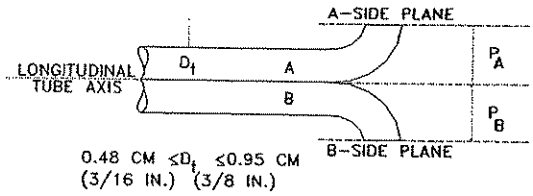

NOTE:
1.05 D_t < P_t < 1.50 D
P_A = P_B

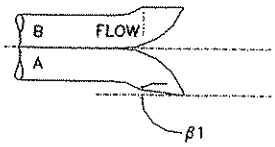

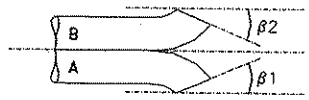

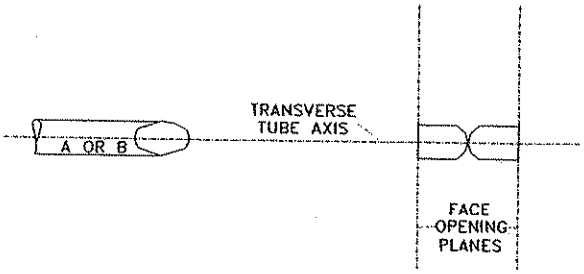

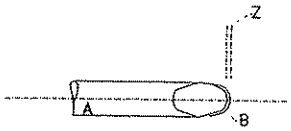

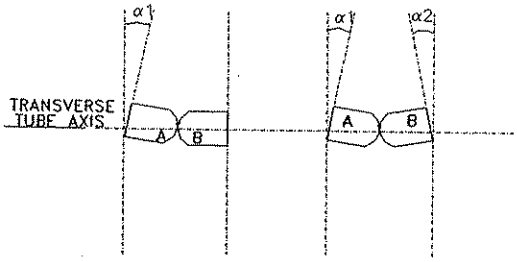

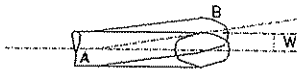

TYPE S PITOT TUBE INSPECTION DATA FORM

Pitot tube assembly level? x yes ____ no

Pitot tube openings damaged? ____ yes (explain below) x no

a_1 = 5 °(<10°), a_2 = 0 °(<10°) z = A sin g = 0.012 (in.); (<0.125 in.)

b_1 = 0 °(<5°), b_2 = 1 °(<5°) w = A sin q = 0.000 (in.); (<0.03125 in.)

g = 1 °, q = 0 °, A = 0.697 (in.) P_A = 0.349 (in.), P_B = 0.349 (in.), D_t = 0.250 (in.)

Comments: M22E1650 post test inspection

Calibration required? ____ yes X no

Pitot Tube No.: 900 Date: 4/11/2008 Name: L. Campo

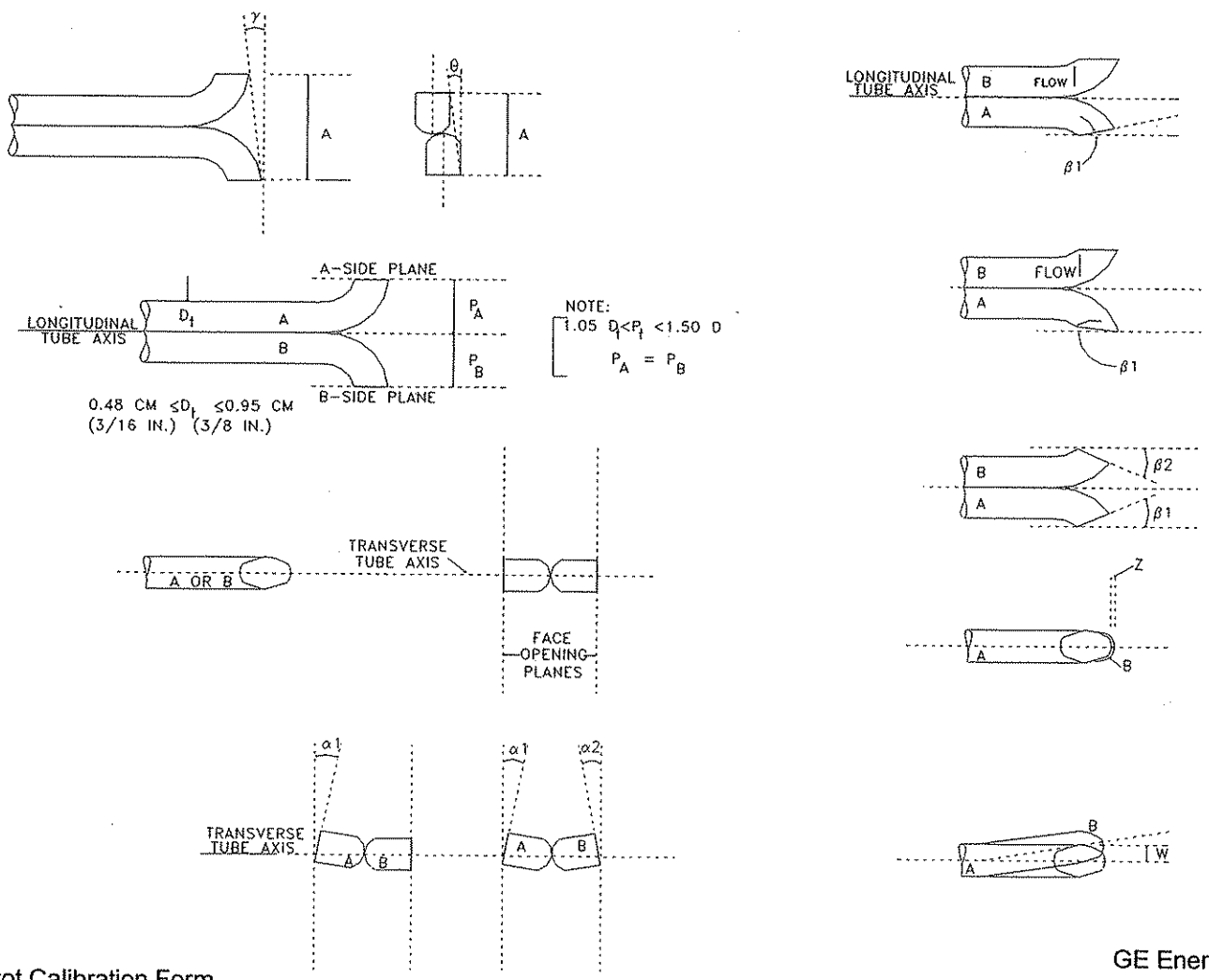

GE Energy

PITOT TUBE ASSEMBLY INSPECTION FORM

PROJECT NUMBER: M22E1650
PROJECT: Motiva - Norco
LOCATION: S3 Stack

DATE: March 5, 2008
INSPECTOR: Jeff Daniels
EQUIPMENT: 900A/B Blast Furnace Probe - 10'

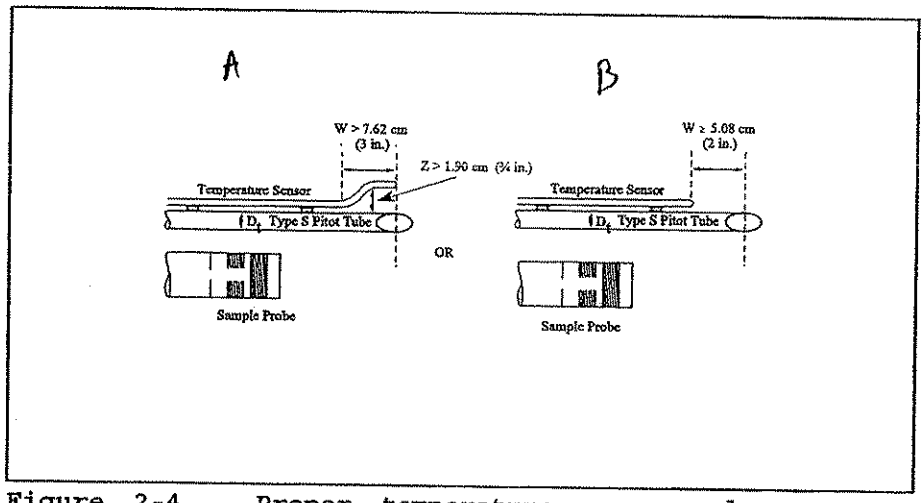

Figure 2-4. Proper temperature sensor placement to prevent interference; D_t between 0.48 and 0.95 cm (3/16 and 3/8 in).

Configuration (A or B): B
Tube diameter (D_t): 0.25"

Distance W: 5.2 cm
Distance Z: N/A

GE Energy

PITOT TUBE ASSEMBLY INSPECTION FORM

PROJECT NUMBER: M22E1650
PROJECT: Motiva - Norco
LOCATION: S3 Incinerator Stack

DATE: March 3, 2008
INSPECTOR: Jeff Daniels
EQUIPMENT: 900A/B 10' Blast Furnace Probe

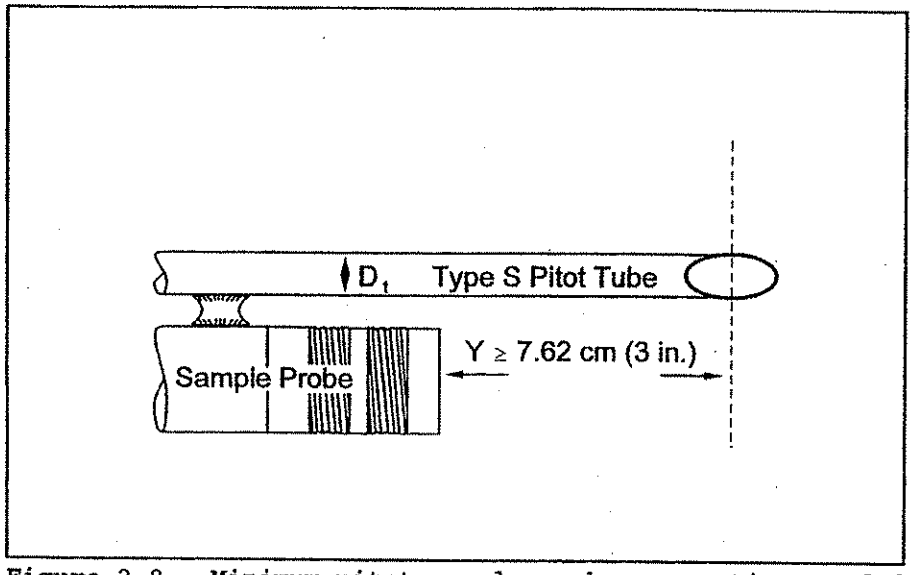

Figure 2-8. Minimum pitot-sample probe separation needed to prevent interference; D_t between 0.48 and 0.95 cm (3/16 and 3/8 in).

Distance Y: 6.5"

PITOT TUBE CALIBRATION DATA

Type "S" Pitot Tube ID Number: 900 Size (OD): 0.25 Leak Check: OK

Calibration Pitot Tube

Type: Hemispherical (std) Size (OD): 1/4" Cp(std) = 1.00 ID #: Dwyer 160-8

Calibration Date: 01/11/08 Performed By: L. Campo

P_{std}, (in.) H_2O		A-Side Calibration		
Set Value	Read Value	P_s, (in.) H_2O	$C_{p(S)}$ [a]	DEV. [b]
0.25	0.24	0.350	0.828	0.006
0.55	0.54	0.780	0.832	0.009
0.85	0.80	1.200	0.816	0.006
1.00	1.00	1.500	0.816	0.006
2.00	2.00	3.000	0.816	0.006
3.00	3.00	4.400	0.826	0.003
		Average	0.823	#DIV/0!

P_{std}, (in.) H_2O		B-Side Calibration		
Set Value	Read Value	P_s, (in.) H_2O	$C_{p(S)}$ [a]	DEV. [b]
0.25	0.24	0.350	0.828	0.006
0.55	0.54	0.780	0.832	0.009
0.85	0.80	1.200	0.816	0.006
1.00	1.00	1.500	0.816	0.006
2.00	2.00	3.000	0.816	0.006
3.00	3.00	4.400	0.826	0.003
		Average	0.823	#DIV/0!

$\overline{C_p}(A) - \overline{C_p}(B) =$ 0.000
(must be ≤ 0.01)

[a] $C_{p(S)} = C_{p(std)}\sqrt{\frac{\Delta P_{std}}{\Delta P_s}}$

[b] $DEV = C_{p(S)} - \overline{C_p}$
(must be ≤ 0.01)

GE Energy
Thermocouple Calibration Procedure ALT-011

Project Number: M22616 50
Facility: MOTIVA NORCO
Location: S3

Inspector: JCD / JPM
Reference Thermometer: 231664

Procedure 1: Calibrate thermocouple against a reference thermometer.

After each test run series, check the accuracy (and, hence, the calibration) of each thermocouple system at ambient temperature, or any other temperature, within the range specified by the manufacture, using a reference thermometer (either ASTM reference thermometer or a thermometer that has been calibrated against an ASTM reference thermometer). The temperatures of the thermocouple and reference thermometers shall agree to within ±2°F.

Date	Time	Temperature Sensor ID	Reference Point	Response (°F)	Difference (°F)
3/5/08	17:30	STACK	76	75	1
3/5/08	17:35	F15 DGM	76	75	1

Procedure 2: Check the response of the thermocouple to a change in temperature.

A crimp in the connecting wires or crossed lines that change the locationof the reference junction will affect readings. Check the continuity of the reference junction will affect readings. Check the continuity of the thermocouple by subjecting it to a change in the temperature (e.g.., removing it from the stack or touching an ice cube). This step will also check for loose connections and reversed connections (noted by a wrong change in the temperature).

Date	Time	Temperature Sensor ID	Type of Change	Predicted Response	Actual Response
3/5/08	17:00	STACK	Cooling	Lowered	Lowered
3/5/08	17:35	F17 DGM	Warming	Raised	Raised

Submitted By: Jeffery Daniels
Date: 3/5/2008

Gas Meter Calibration Train

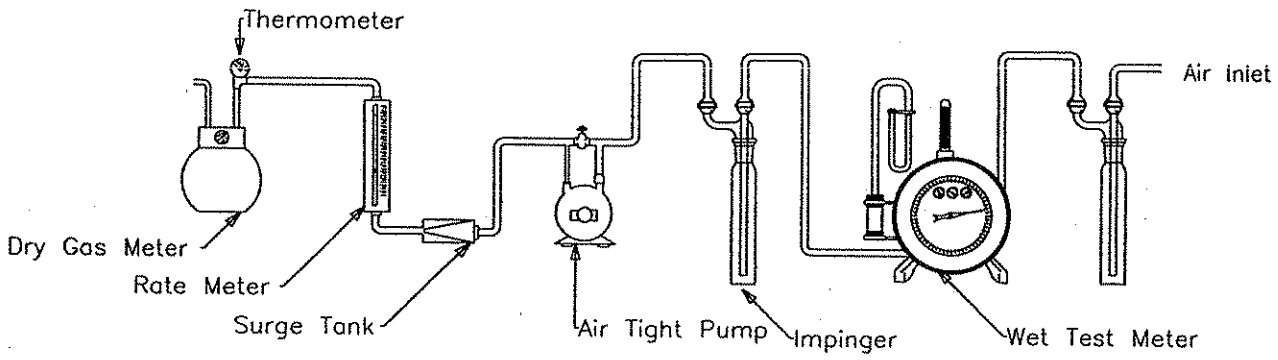

Dwg - AF

Pre Test DGM Calibration

Control Module No.	F15	Date:	08-17-2007
Standard Meter No.	3470243	Calibrated By:	DCR
Standard Meter (Yr)	0.996	Barometric Pressure :	29.92

Run Number	Orifice Setting in. H_20 (set value)	Orifice Setting in. H_20 (read value)	Standard Meter Volume Vr	Control Module DGM Volume Vd	Standard Meter Temp. F tr	Dry Gas Meter Inlet Temp. F tdi	Dry Gas Meter Outlet Temp. F tdo	Dry Gas Meter Avg. Temp. F td	Time Min.	Time Sec.	Y	Δ H@
Initial			59.160	11.755	75	87	82					
Final			62.321	14.928	75	90	86					
Difference 1	0.15	0.15	3.161	3.173	75	88.5	84	86.25	20		1.017	3.353
Initial			62.321	14.928	75	90	86					
Final			67.258	19.918	75	92	88					
Difference 2	0.25	0.25	4.937	4.990	75	91	87	89	20		1.015	2.279
Initial			67.258	19.918	75	92	88					
Final			71.305	24.025	75	92	89					
Difference 3	0.35	0.35	4.047	4.107	75	92	88.5	90.25	18		1.013	3.837

Specifications: CFR 40, Part 60, Appendix A, Method 5, section 10.3.1. Calibration Before Use.

Pre Test Calibration Factor (Y) 1.015 3.156

Pre Test Temperature Indicator Calibration
(For K-Type Thermocouples)

Date: 8/17/2007

Name: DCR

Control Module Number: F15

Ambient (room) Temperature: 75 °F

Reference Thermocouple Calibrator: Omega Engineering, Inc. Model No. CL23A
Reference Thermocouple Calibrator Serial Number: T-256103
Date of Reference Calibration Verification: 5/15/2007

Primary Standards Directly Traceable to:
National Institute of Standards and Technology (NIST)

Reference Source Temperature, (°F)	Test Thermometer Temperature, (°F)	Temperature Difference, %
0	0	0.0
600	600	0.0
1200	1200	0.0

$$\frac{(\text{Ref. Temp., °F} + 460) - (\text{Test Therm. Temp., °F} + 460)}{\text{Ref. Temp., °F} + 460} * 100 <= 1.5\ \%$$

Post Test DGM Calibration

Control Module No.	F-15	Date:	03-20-2008
Standard Meter No.	29621547	Calibrated By:	L. Campo
Standard Meter (Yr)	0.997	Barometric Pressure :	29.56

Run Number	Orifice Setting in. H_20 (set value)	Orifice Setting in. H_20 (read value)	Standard Meter Gas Volume Vr	Control Module DGM Volume Vd	Standard Meter Temp. F tr	Dry Gas Meter Inlet Temp. F tdi	Dry Gas Meter Outlet Temp. F tdo	Dry Gas Meter Avg. Temp. F td	Time Min.	Time Sec.	Y	Δ H@
Initial			94.758	92.923	63	72	66					
Final			99.832	97.907	64	74	70					
Difference 1	0.25	0.25	5.074	4.984	63.5	73	68	70.5	21	55	1.031	2.599
Initial			99.832	97.907	64	74	70					
Final			105.100	103.180	64	75	71					
Difference 2	0.25	0.25	5.268	5.273	64	74.5	70.5	72.5	22	52	1.015	2.619
Initial			105.100	103.180	64	75	71					
Final			110.462	108.572	64	75	71					
Difference 3	0.25	0.25	5.362	5.392	64	75	71	73			1.011	0.000

Post Test Calibration Factor (Y)	1.019	1.739
Pre Test Calibration Factor (Y)	0.995	
Pre Test Calibration (Date):	07-03-2006	
% diff. between Pre & Post (Y)	2.4	

Specifications: CFR 40, Part 60, Appendix A, Method 5, section 10.3.2. Calibration After Use.

If difference between Pre & Post is less than 5% use Pre Test (Y)

Post Test Temperature Indicator Calibration
(For K-Type Thermocouples)

Date: 03-20-2008

Name: L. Campo

Control Module Number: F-15

Ambient (room) Temperature: 64 °F

Reference Thermocouple Calibrator: Omega Engineering, Inc. Model No. CL23A
Reference Thermocouple Calibrator Serial Number: T236796
Date of Reference Calibration Verification: 5/15/2007

Primary Standards Directly Traceable to:
National Institute of Standards and Technology (NIST)

Reference Source Temperature, (°F)	Test Thermometer Temperature, (°F)	Temperature Difference, %
0	0	0.0
600	600	0.0
1200	1201	0.1

$$\frac{(\text{Ref. Temp., °F} + 460) - (\text{Test Therm. Temp., °F} + 460)}{\text{Ref. Temp., °F} + 460} * 100 <= 1.5\ \%$$

Time 24 hour	Volume (V_m) ft^3	Pressure (ΔH) in. H_2O	(T_m) °F	Outlet Temp. °F
NOTE: CHECKED TRIPPLE BEAM				
ON 4-12-2008 WITH CAL WEIGHTS				
BALANCE 200724				
WEIGHT SET 78343				
REF	RESPONSE			
500	500.0		Jeff Daniels	
100	100.0		4/12/08	
300*	299.9			
* USED 100g + 200g Weights				
Avg.			(T_m)	°R

Glass Sample Containers

No. 1-impingers 1,2+3

No. 2-impingers 4+5

* unless discussed prior to testing, other modes of recovery

$V_{m(std)}$ = _____ ft^3

Leak Check:

Silica Gel or Train

_____ grams (W_f)

_____ grams (W_i)

_____ grams

× 0.04715 = .

_____ ft^3(V_w (std))

Water Vapor, proportion by volume*

B_{ws} = _____

Moisture Correction factor:

1 - B_{ws} = _____

Comments: If using ¼" Teflon as probe, rinse with D.I. into containers No. 1. *

$$V_{m(std)} = 17.647 V_m Y \frac{P_{bar} + \frac{\Delta H}{13.6}}{T_m} \qquad B_{ws} = \frac{V_{w(std)}}{V_{w(std)} + V_{m(std)}}$$

Operator: Jeff Daniels

© Copyright 2006 GE Energy

Form 1000-Revised 11-15-2006

Include where needed for M22E1628, MOTIVA - Convent Refinery and MOTIVA - Norco Refinery projects in Q1 2008.

JCD 4/13/08

FIELD BAROMETER 200725 USED AT MOTIVA NORCO ON 3/5/2008 — JCD

GE Energy

Barometer Calibration Information

JCD
See Attached

PROJECT NUMBER: M22E1628

PROJECT: MOTIVA ENTERPRISES LLC

LOCATION: CONVENT REFINERY

INSPECTOR: Jeff Daniels

EQUIPMENT: 200725

Procedure 1

Date	Time	Pb "Hg (Reference)	Pb "Hg (Field Barometer)	Pb "Hg Difference
2-7-08	10:00	30.09	30.05	0.04
2-8-08	9:00	30.04	30.00	0.04
2-13-2008	11:00	30.11	30.05	0.06
2-14-2008	7:00	30.18	30.09	0.09
2-15-08	9:00	30.23	30.15	0.08
2-18-08	9:00	30.10	30.01	0.09
2-19-08	9:00	30.30	30.12	0.18
2-20-08	9:00	30.15	30.10	0.05

Procedure 2

Date	P_r	Elevation A	Elevation B	Site Pressure P_b
2-7-08	30.11	0	20	30.09
2-8-08	30.06	0	20	30.04
2-13-08	30.13	0	20	30.11
2-14-08	30.20	0	20	30.18
2-15-08	30.25	0	20	30.23
2-18-08	30.12	0	20	30.10
2-19-08	30.32	0	20	30.30
2-20-08	30.17	0	20	30.15

Note: C2d-1 criteria taken from USEPA Quality Assurance Handbook Volume III, Sept 1994 (JCD-January 1, 2008)

9/30/94: C2d-1

CALIBRATION PROCEDURE 2d
Barometer

A. Procedure 1

1. Compare the field barometer reading against that of a mercury-in-glass barometer.
2. Adjust the field barometer reading to within ±0.1 in. Hg.

B. Procedure 2

1. Obtain the station value or absolute barometric pressure P_r from a nearby National Weather Service station and its elevation (A) in feet above sea level.
2. Determine the elevation (B) in feet above sea level of the site of the field barometer.
3. Calculate the site barometric pressure (P_b) as follows:

$$P_b = P_r + 0.001\,(A-B)$$

4. Compare the field barometer reading against P_b obtained in step 3.
5. Adjust the field barometer reading to within ±0.1 in. Hg.

AIR LIQUIDE

Scott Specialty Gases
Air Liquide America Specialty Gases LLC

Shipped From:
1290 COMBERMERE STREET
TROY MI 48083
Phone: 248-589-2950 Fax: 248-589-2134

CERTIFICATE OF ANALYSIS

GE ENERGY/ELMURST

888 INDUSTRIAL DRIVE

ELMHURST IL 60126-1012

PROJECT #: 05-62235-001
PO#: GE/IL
ITEM #: 0501841 AL
DATE: 21Dec2007

CYLINDER #: ALM038103
FILL PRESSURE: 02000 PSIG

PURE MATERIAL: NITROGEN CAS# 7727-37-9

GRADE: ACID RAIN CEM 0

PURITY: 99.9995%

IMPURITY	MAXIMUM CONCENTRATIONS
SO2	0.1 PPM
NOX	0.1 PPM
CO	0.5 PPM
CO2	1 PPM
THC	0.1 PPM
H2O	2 PPM
O2	0.5 PPM

ANALYST: _____

RATA CLASS

Scott Specialty Gases

Dual-Analyzed Calibration Standard

1290 COMBERMERE STREET,TROY,MI 48083 Phone: 248-589-2950 Fax: 248-589-2134

CERTIFICATE OF ACCURACY: EPA Protocol Gas

Assay Laboratory

SCOTT SPECIALTY GASES
1290 COMBERMERE STREET
TROY,MI 48083

P.O. No.: GE ENERGY STOCK
Project No.: 05-45466-005

Customer

GE ENERGY - ELMHURST

888 INDUSTRIAL DRIVE
ELMHURST IL 60126-1012

ANALYTICAL INFORMATION

This certification was performed according to EPA Traceability Protocol For Assay & Certification of Gaseous Calibration Standards; Procedure G-1; September, 1997.

Cylinder Number: ALM053192 **Certification Date:** 01Aug2006 **Exp. Date:** 31Jul2008
Cylinder Pressure*:** 2015 PSIG

COMPONENT	CERTIFIED CONCENTRATION (Moles)		ANALYTICAL ACCURACY**	TRACEABILITY
NITRIC OXIDE	89.66	PPM	+/- 1%	Direct NIST and NMi
NITROGEN - OXYGEN FREE		BALANCE		
TOTAL OXIDES OF NITROGEN	89.66	PPM		Reference Value Only

*** Do not use when cylinder pressure is below 150 psig.
** Analytical accuracy is based on the requirements of EPA Protocol Procedure G1, September 1997.

REFERENCE STANDARD

TYPE/SRM NO.	EXPIRATION DATE	CYLINDER NUMBER	CONCENTRATION	COMPONENT
NTRM 1684	01Jun2009	AAL070943	98.40 PPM	NITRIC OXIDE

INSTRUMENTATION

INSTRUMENT/MODEL/SERIAL#	DATE LAST CALIBRATED	ANALYTICAL PRINCIPLE
FTIR//0928621	14Jul2006	FTIR

ANALYZER READINGS

(Z=Zero Gas R=Reference Gas T=Test Gas r=Correlation Coefficient)

NITRIC OXIDE

First Triad Analysis

Date: 24Jul2006	Response Unit:PPM	
Z1=-0.04596	R1=97.38081	T1=89.12132
R2=97.44773	Z2=-0.00700	T2=89.14243
Z3=0.06931	T3=89.22219	R3=97.55286
Avg. Concentration:	90.02	PPM

Second Triad Analysis

Date: 01Aug2006	Response Unit: PPM	
Z1=0.25217	R1=98.61926	T1=89.17713
R2=98.84856	Z2=0.28984	T2=89.46025
Z3=0.52134	T3=89.55014	R3=99.26845
Avg. Concentration:	89.30	PPM

Calibration Curve

Concentration=A+Bx+Cx2+Dx3+Ex4	
r=9.99973E-1	
Constants:	A=0.00000E+0
B=1.00935E+0	C=-1.44000E-4
D=0.00000E+0	E=0.00000E+0

Special Notes: SEND CERT WITH CYLINDER

APPROVED BY: _____
JEFF CROTEAU

RATA CLASS

Dual-Analyzed Calibration Standard

1290 COMBERMERE STREET,TROY,MI 48083 Phone: 248-589-2950 Fax: 248-589-2134

CERTIFICATE OF ACCURACY: EPA Protocol Gas

Assay Laboratory

SCOTT SPECIALTY GASES
1290 COMBERMERE STREET
TROY,MI 48083

P.O. No.: GE/IL
Project No.: 05-52372-001

Customer

GE ENERGY/ELMURST

888 INDUSTRIAL DRIVE
ELMHURST IL 60126-1012

ANALYTICAL INFORMATION

This certification was performed according to EPA Traceability Protocol For Assay & Certification of Gaseous Calibration Standards; Procedure G-1; September, 1997.

Cylinder Number: ALM019237 **Certification Date:** 23Jun2006 **Exp. Date:** 22Jun2008
Cylinder Pressure*:** 2000 PSIG

COMPONENT	CERTIFIED CONCENTRATION (Moles)		ANALYTICAL ACCURACY**	TRACEABILITY
NITRIC OXIDE	167.6	PPM	+/- 1%	Direct NIST and NMi
NITROGEN - OXYGEN FREE		BALANCE		
TOTAL OXIDES OF NITROGEN	167.6	PPM		Reference Value Only

*** Do not use when cylinder pressure is below 150 psig.
** Analytical accuracy is based on the requirements of EPA Protocol Procedure G1, September 1997.

REFERENCE STANDARD

TYPE/SRM NO.	EXPIRATION DATE	CYLINDER NUMBER	CONCENTRATION	COMPONENT
NTRM 1685	01Jan2010	AAL071109	246.1 PPM	NITRIC OXIDE

INSTRUMENTATION

INSTRUMENT/MODEL/SERIAL#	DATE LAST CALIBRATED	ANALYTICAL PRINCIPLE
FTIR//0928621	08Jun2006	FTIR

ANALYZER READINGS

(Z=Zero Gas R=Reference Gas T=Test Gas r=Correlation Coefficient)

NITRIC OXIDE

First Triad Analysis

Date: 23Jun2006 Response Unit: PPM
Z1=-0.43939 R1=248.8935 T1=170.5451
R2=249.0676 Z2=-0.15229 T2=170.1244
Z3=0.21469 T3=170.9941 R3=249.3288
Avg. Concentration: 168.0 PPM

Second Triad Analysis

Date: 30Jun2006 Response Unit: PPM
Z1=-0.43939 R1=248.8935 T1=168.5284
R2=249.0676 Z2=-0.15229 T2=169.2307
Z3=0.21469 T3=169.5689 R3=249.3288
Avg. Concentration: 167.1 PPM

Calibration Curve

Concentration=A+Bx+Cx2+Dx3+Ex4
r=9.99994E-1
Constants: A=0.00000E+0
B=9.26992E-1 C=3.80000E-5
D=0.00000E+0 E=0.00000E+0

Special Notes: NO RANGE: 160.0 - 190.0 PPM TOTAL NOX NTE 190.0 PPM

APPROVED BY: _____
Scott King

Scott Specialty Gases

RATA CLASS

Scott Specialty Gases

Dual-Analyzed Calibration Standard

9810 BAY AREA BLVD,PASADENA,TX 77507 Phone: 281-474-5800 Fax: 281-474-586

CERTIFICATE OF ACCURACY: EPA Protocol Gas

Assay Laboratory

SCOTT SPECIALTY GASES
9810 BAY AREA BLVD
PASADENA,TX 77507

P.O. No.: GE HOUSTON 05.11.07
Project No.: 04-54506-004

Customer

GE ENERGY/HOUSTON

17619 ALDINE WESTFIELD RD
HOUSTON TX 77073

ANALYTICAL INFORMATION

This certification was performed according to EPA Traceability Protocol For Assay & Certification of Gaseous Calibration Standards; Procedure G-1; September, 1997.

Cylinder Number: ALM057279 **Certification Date:** 12Jun2007 **Exp. Date:** 13Jun2010
Cylinder Pressure*:** 1901 PSIG

COMPONENT	CERTIFIED CONCENTRATION (Moles)	ANALYTICAL ACCURACY**	TRACEABILITY
CARBON MONOXIDE	50.2 PPM	+/- 1%	Direct NIST and NMi
NITROGEN	BALANCE		

*** Do not use when cylinder pressure is below 150 psig.
** Analytical accuracy is based on the requirements of EPA Protocol Procedure G1, September 1997.

REFERENCE STANDARD

TYPE/SRM NO.	EXPIRATION DATE	CYLINDER NUMBER	CONCENTRATION	COMPONENT
NTRM 1678	15Aug2009	ALM044707	51.13 PPM	CARBON MONOXIDE

INSTRUMENTATION

INSTRUMENT/MODEL/SERIAL#	DATE LAST CALIBRATED	ANALYTICAL PRINCIPLE
FTIR//1602651	29May2007	FTIR

ANALYZER READINGS

(Z=Zero Gas R=Reference Gas T=Test Gas r=Correlation Coefficient)

CARBON MONOXIDE

First Triad Analysis

Date: 06Jun2007 Response Unit:PPM
Z1=0.00762 R1=51.13810 T1=50.19825
R2=51.18747 Z2=0.02538 T2=50.19888
Z3=0.03027 T3=50.24486 R3=51.19671
Avg. Concentration: 50.17 PPM

Second Triad Analysis

Date: 12Jun2007 Response Unit: PPM
Z1=-0.00183 R1=51.20731 T1=50.20762
R2=51.24534 Z2=0.01088 T2=50.26518
Z3=0.04914 T3=50.43825 R3=51.32444
Avg. Concentration: 50.18 PPM

Calibration Curve

Concentration=A+Bx+Cx2+Dx3+Ex4
r=1.00000E+0
Constants: A=0.00000E+0
B=8.36324E-1 C=3.88000E-4
D=1.00000E-6 E=0.00000E+0

APPROVED BY: RAMIEN JR

RATA CLASS

Scott Specialty Gases

Dual-Analyzed Calibration Standard

1290 COMBERMERE STREET,TROY,MI 48083 Phone: 248-589-2950 Fax: 248-589-2134

CERTIFICATE OF ACCURACY: EPA Protocol Gas

Assay Laboratory

SCOTT SPECIALTY GASES
1290 COMBERMERE STREET
TROY,MI 48083

P.O. No.: GE ENERGY STOCK
Project No.: 05-53469-002

Customer

GE ENERGY - ELMHURST

888 INDUSTRIAL DRIVE
ELMHURST IL 60126-1012

ANALYTICAL INFORMATION

This certification was performed according to EPA Traceability Protocol For Assay & Certification of Gaseous Calibration Standards; Procedure G-1; September, 1997.

Cylinder Number: ALM011473 **Certification Date:** 04Apr2007 **Exp. Date:** 03Apr2010
Cylinder Pressure*:** 1898 PSIG

COMPONENT	CERTIFIED CONCENTRATION (Moles)		ANALYTICAL ACCURACY**	TRACEABILITY
CARBON MONOXIDE	90.29	PPM	+/- 1%	Direct NIST and NMi
NITROGEN		BALANCE		

*** Do not use when cylinder pressure is below 150 psig.

** Analytical accuracy is based on the requirements of EPA Protocol Procedure G1, September 1997.

REFERENCE STANDARD

TYPE/SRM NO.	EXPIRATION DATE	CYLINDER NUMBER	CONCENTRATION	COMPONENT
NTRM 1679	01May2011	ALM038059	94.90 PPM	CARBON MONOXIDE

INSTRUMENTATION

INSTRUMENT/MODEL/SERIAL#	DATE LAST CALIBRATED	ANALYTICAL PRINCIPLE
FTIR//0928621	02Apr2007	FTIR

ANALYZER READINGS

(Z=Zero Gas R=Reference Gas T=Test Gas r=Correlation Coefficient)

CARBON MONOXIDE

First Triad Analysis		
Date: 28Mar2007	Response Unit:PPM	
Z1=-0.05270	R1=94.23721	T1=89.76947
R2=94.40244	Z2=-0.01795	T2=89.82698
Z3=0.07179	T3=89.95268	R3=94.49937
Avg. Concentration:	90.35	PPM

Second Triad Analysis		
Date: 04Apr2007	Response Unit: PPM	
Z1=0.10443	R1=94.82406	T1=90.18483
R2=94.90424	Z2=0.20990	T2=90.22479
Z3=0.21359	T3=90.37785	R3=95.04634
Avg. Concentration:	90.23	PPM

Calibration Curve	
Concentration=A+Bx+Cx2+Dx3+Ex4	
r=9.99996E-1	
Constants:	A=0.00000E+0
B=6.97329E-1	C=3.60000E-4
D=0.00000E+0	E=0.00000E+0

Special Notes: SEND CERT WITH CYLINDER

APPROVED BY: _____
Scott King

RATA CLASS

Scott Specialty Gases

Dual-Analyzed Calibration Standard

1290 COMBERMERE STREET,TROY,MI 48083 Phone: 248-589-2950 Fax: 248-589-2134

CERTIFICATE OF ACCURACY: EPA Protocol Gas

Assay Laboratory

SCOTT SPECIALTY GASES
1290 COMBERMERE STREET
TROY,MI 48083

P.O. No.: GE ENERGY STOCK
Project No.: 05-57884-003

Customer

GE ENERGY - ELMHURST

888 INDUSTRIAL DRIVE
ELMHURST IL 60126-1012

ANALYTICAL INFORMATION

This certification was performed according to EPA Traceability Protocol For Assay & Certification of Gaseous Calibration Standards; Procedure G-1; September, 1997.

Cylinder Number: ALM001689 **Certification Date:** 27Aug2007 **Exp. Date:** 26Aug2010
Cylinder Pressure*:** 2000 PSIG

COMPONENT	CERTIFIED CONCENTRATION (Moles)		ANALYTICAL ACCURACY**	TRACEABILITY
OXYGEN	12.41	%	+/- 1%	Direct NIST and NMi
NITROGEN		BALANCE		

*** Do not use when cylinder pressure is below 150 psig.

** Analytical accuracy is based on the requirements of EPA Protocol Procedure G1, September 1997.

REFERENCE STANDARD

TYPE/SRM NO.	EXPIRATION DATE	CYLINDER NUMBER	CONCENTRATION	COMPONENT
NTRM 2350	01May2009	K026542	23.48 %	OXYGEN

INSTRUMENTATION

INSTRUMENT/MODEL/SERIAL#	DATE LAST CALIBRATED	ANALYTICAL PRINCIPLE
ROSEMOUNT/755R/1000430	27Aug2007	PARAMAGNETIC

ANALYZER READINGS

(Z=Zero Gas R=Reference Gas T=Test Gas r=Correlation Coefficient)

OXYGEN

First Triad Analysis	Second Triad Analysis	Calibration Curve
Date: 27Aug2007 Response Unit:%		Concentration = A + Bx + Cx2 + Dx3 + Ex4
Z1 = 0.00000 R1 = 23.49000 T1 = 12.38000		r = 0.999992
R2 = 23.45000 Z2 = 0.00000 T2 = 12.36000		Constants: A = 0.056358
Z3 = 0.00000 T3 = 12.34000 R3 = 23.42000		B = 0.997993 C = 0
Avg. Concentration: 12.41 %		D = 0 E = 0

Special Notes: SEND CERT WITH CYLINDER

APPROVED BY: _____

AIR LIQUIDE
Scott Specialty Gases
Air Liquide America Specialty Gases LLC

2330 HAMILTON BOULEVARD, SOUTH PLAINFIELD, NJ 07080 Phone: 908-754-7700 Fax: 908-754-7303

RATA CLASS

Dual-Analyzed Calibration Standard

CERTIFICATE OF ACCURACY: EPA Protocol Gas

Assay Laboratory

SCOTT SPECIALTY GASES
2330 HAMILTON BOULEVARD
SOUTH PLAINFIELD, NJ 07080

P.O. No.: 182133316
Project No.: 07-54588-006

Customer

GENERAL ELECTRIC

JANIE HAYNER/BLDG 1/BAY10
110 ROTTERDAM IND.PK
SCHENECTADY NY 12306

ANALYTICAL INFORMATION

This certification was performed according to EPA Traceability Protocol For Assay & Certification of Gaseous Calibration Standards; Procedure G 1; September, 1997.

Cylinder Number: ALM027417 **Certification Date:** 29Sep2005 **Exp. Date:** 28Sep2008
Cylinder Pressure*:** 2000 PSIG

COMPONENT	CERTIFIED CONCENTRATION (Moles)		ANALYTICAL ACCURACY**	TRACEABILITY
CARBON DIOXIDE	11.20	%	+/- 1%	Direct NIST and NMi
OXYGEN	21.15	%	+/- 1%	Direct NIST and NMi
NITROGEN		BALANCE		

*** Do not use when cylinder pressure is below 150 psig.
** Analytical accuracy is based on the requirements of EPA Protocol Procedure G1, September 1997.

REFERENCE STANDARD

TYPE/SRM NO.	EXPIRATION DATE	CYLINDER NUMBER	CONCENTRATION	COMPONENT
NTRM 1800	01Jan2008	X66736J	18.05 %	CARBON DIOXIDE
NTRM 2350	01May2009	K018020	23.48 %	OXYGEN

INSTRUMENTATION

INSTRUMENT/MODEL/SERIAL#	DATE LAST CALIBRATED	ANALYTICAL PRINCIPLE
HORIBA/OPE-135/56560709 1	21Sep2005	NDIR
HORIBA/MPA 21/8506581308	21Sep2005	PARAMAGNETIC

ANALYZER READINGS

(Z=Zero Gas R–Reference Gas T=Test Gas r=Correlation Coefficient)

First Triad Analysis | Second Triad Analysis | Calibration Curve

CARBON DIOXIDE

Date: 29Sep2005	Response Unit:VOLTS	
Z1=0.00000	R1=0.93800	T1=0.68300
R2=0.93775	Z2=0.00000	T2=0.68200
Z3=0.00000	T3=0.68200	R3=0.87325
Avg. Concentration:	11.20	%

Concentration=A+Bx+Cx2+Dx3+Ex4	
r=0.9999962508	1800
Constants:	A=-0.020875842
B=12.281440012	C=2.4216736602
D=5.3397090141	E=

OXYGEN

Date: 29Sep2005	Response Unit:VOLTS	
Z1=0.00000	R1=0.99800	T1=0.89200
R2=0.99700	Z2=0.00000	T2=0.89200
Z3=0.00000	T3=0.89300	R3=0.99800
Avg. Concentration:	21.15	%

Concentration=A+Bx+Cx2+Dx3+Ex4	
r=0.9999258055	2350
Constants:	A=0.1215930020
B=23.564413082	C=
D=	E=

APPROVED BY:

NO_2 Converter Efficiency Verification

Project Number:	M22E1650	Test Date:	03/05/08
Customer:	Motiva Enterprises, LLC	Facility:	Norco Refinery
Unit ID:	Sulfur Plant S3	Sample Loc:	Incinerator Stack
NOx Analyzer Model #:	42C	CE Test Date:	03/05/08
NOx Analyzer Serial #:	42CHL-74547-376		

Option II: Tedlar bag verification

Decrease in NOx value less than 2% of peak value

Peak NOx Value:	80.0	ppm
Minimum NOx Value:	79.2	ppm (30 minutes after peak value)
Decrease:	1.0	% of peak
Status:	Pass	

© Copyright 2008 GE Energy

3/5/2008	NO-SYS1 PPM	NOX-SYS1 PPM
11:44	73.72	79.37
11:45	73.13	79.81
11:46	72.33	79.94
11:47	71.49	79.97
11:48	70.63	79.97
11:49	69.80	79.97
11:50	68.97	79.94
11:51	68.17	79.80
11:52	67.40	79.90
11:53	66.63	79.80
11:54	65.86	79.81
11:55	65.13	79.80
11:56	64.42	79.77
11:57	63.69	79.64
11:58	62.96	79.57
11:59	62.26	79.57
12:00	61.63	79.51
12:01	60.96	79.38
12:02	60.30	79.38
12:03	59.70	79.38
12:04	59.17	79.38
12:05	58.60	79.35
12:06	58.01	79.28
12:07	57.48	79.18
12:08	56.98	79.18
12:09	56.48	79.18
12:10	55.98	79.18
12:11	55.45	79.18
12:12	54.98	79.18
12:13	54.50	79.18
12:14	54.04	79.18

Response Time Verification

Project Number:	M22E1650	Test Date:	03/05/08
Customer:	Motiva Enterprises, LLC	Facility:	Norco Refinery
Unit ID:	Sulfur Plant S3		
Sample Location:	Incinerator Stack		

Upscale Response Check						
Pollutant	Cal Gas Level	Cal Gas Conc.	Start Time	Target Response	Time at Target	Response Time
NOx	Mid	89.7	12:56:00	85.2	12:59:00	0:03:00
CO	Mid	50.2	12:45:00	47.7	12:47:00	0:02:00
O2	Mid	12.4	13:17:00	11.8	13:19:00	0:02:00

Start time is the time at which gas is introduced upstream of the probe.
Time at target is the time at which the required target response is achieved.
Response time is the difference between the two.

Zero Response Check						
Pollutant	Cal Gas Level	Cal Gas Conc.	Start Time	Target Response	Time at Target	Response Time
NOx	Low	0.0	13:01:00	4.5	13:03:00	0:02:00
CO	Low	0.0	12:50:00	2.5	12:53:00	0:03:00
O2	Low	0.0	13:22:00	0.6	13:24:00	0:02:00

System Response Times	
Pollutant	**Response Time**
NOx	**0:03:00**
CO	**0:03:00**
CO2	
O2	**0:02:00**

System response is the longer of the responses to zero and upscale gas.

© Copyright 2008 GE Energy

Response Time

3/5/2008	NO-SYS1 PPM	NOX-SYS1 PPM		O2-SYS1 %		CO-SYS1 PPM	
12:43	0.14	0.04		0.09		0.08	
12:44	0.07	0.02	Z	0.08	Z	0.07	Z
12:45	0.08	0.01		0.08		0.09	
12:46	0.08	0.02		0.10		35.73	
12:47	0.09	0.03		0.09		53.16	
12:48	0.08	0.06		0.08		53.23	
12:49	0.09	0.02		0.09		50.30	M
12:50	0.09	0.02		0.08		50.20	
12:51	0.09	0.02		0.08		47.49	
12:52	0.08	0.02		0.07		3.86	
12:53	0.08	0.02		0.07		0.06	
12:54	0.08	0.02		0.07		0.05	
12:55	0.07	0.01		0.07		0.03	
12:56	0.07	0.02		0.07		0.03	
12:57	38.86	28.29		0.08		0.07	
12:58	86.62	86.71		0.07		0.11	
12:59	88.19	88.67		0.07		0.11	
13:00	88.19	88.73	M	0.07		0.07	
13:01	88.25	88.76		0.07		0.08	
13:02	49.90	61.27		0.07		0.12	
13:03	0.36	0.40		0.06		0.11	
13:04	0.27	0.09		0.07		0.11	
13:05	0.08	0.03		0.07		0.11	
13:06	0.08	0.03		0.30		0.10	
13:07	0.08	0.03		12.52		0.25	
13:08	0.08	0.04		12.95		0.36	
13:09	0.08	0.03		12.80		0.41	
13:10	0.08	0.04		12.94		0.38	
13:11	0.08	0.04		12.94		0.40	
13:12	0.08	0.03		12.55		0.36	
13:13	0.08	0.04		12.58		0.39	
13:14	0.09	0.03		1.74		0.20	
13:15	0.09	0.03		0.10		0.00	
13:16	0.09	0.03		0.09		0.00	
13:17	0.09	0.03		0.08		0.01	
13:18	0.09	0.03		1.92		0.02	
13:19	0.09	0.03		12.58		0.27	
13:20	0.09	0.03		12.44		0.33	
13:21	0.09	0.03		12.43	M	0.32	
13:22	0.09	0.03		12.43		0.38	
13:23	0.09	0.03		2.94		0.22	
13:24	0.10	0.02		0.09		0.02	
13:25	0.09	0.03		0.08		0.00	

ANALYZER INTERFERENCE RESPONSE TEST

USEPA Reference Method: 7E Analyzer Type: NO_x

Analyzer Manufacturer: TECO Model Number: 42C

Analyzer Span: 0-500 ppm

Test Performed by: B. Randall Date: 12/13/2005

Interference Gas	Interference Gas Concentration	Impact of Interference Gas on Analyzer	
		Analyzer Response, ppm	Percent of Span
NO_x	423.6 ppm	--	--
SO_2	223.6 ppm	1.2	0.24
CO	435.1 ppm	-6.9	-1.38
CO_2	10.9%	1.2	0.24
O_2	20.9%	0.1	0.02
	Total Response (sum)	-4.4	-0.88

Total impact on analyzer reading must be < 2% of analyzer span.

Detailed interference response test data is maintained on file and is available upon request.

© Copyright 2008 GE Energy

ANALYZER INTERFERENCE RESPONSE TEST

USEPA Reference Method: 10 Analyzer Type: CO

Analyzer Manufacturer: TECO Model Number: 48C

Analyzer Span: 0-1000 ppm

Test Performed by: B. Randall Date: 12/13/2005

Interference Gas	Interference Gas Concentration	Impact of Interference Gas on Analyzer	
		Analyzer Response, ppm	Percent of Span
NO_x	423.6 ppm	-3.2	-0.32
SO_2	223.6 ppm	-2.6	-0.26
CO	435.1 ppm	--	--
CO_2	10.9%	-2.6	-0.26
O_2	20.9%	-1.0	-0.01
	Total Response (sum)	-9.4	-0.85

Total impact on analyzer reading must be < 2% of analyzer span.

Detailed interference response test data is maintained on file and is available upon request.

© Copyright 2008 GE Energy

ANALYZER INTERFERENCE RESPONSE TEST

USEPA Reference Method: 3A Analyzer Type: O_2

Analyzer Manufacturer: Servomex Model Number: 1400

Analyzer Span: 0-25%

Test Performed by: M. Simmons Date: 2/12/1998

Interference Gas	Interference Gas Concentration	Impact of Interference Gas on Analyzer	
		Analyzer Response, ppm	Percent of Span
NO_x	488.2 ppm	0.02	0.08
SO_2	208.9 ppm	0.05	0.20
CO	450.7 ppm	0.07	0.28
CO_2	9.98%	-0.03	-0.12
O_2	22.5%	--	--
	Total Response (sum)	0.11	0.44

Total impact on analyzer reading must be < 2% of analyzer span.

Detailed interference response test data is maintained on file and is available upon request.

© Copyright 2008 GE Energy

STATE OF LOUISIANA
DEPARTMENT OF ENVIRONMENTAL QUALITY

Is hereby granting a Louisiana Environmental Laboratory Accreditation to:

GE Energy Management Services, Inc.
888 Industrial Drive
Elmhurst, IL 60126

Agency Interest No. 30640

According to the Louisiana Administrative Code, Title 33, Part I, Subpart 3, LABORATORY ACCREDITATION, the State of Louisiana formally recognizes that this laboratory is technically competent to perform the environmental analyses listed on the scope of accreditation detailed in the attachment.

The laboratory agrees to perform all analyses listed on this scope of accreditation according to the Part I, Subpart 3 requirements and acknowledges that continued accreditation is dependent on successful ongoing compliance with the applicable requirements of Part I. Please contact the Department of Environmental Quality, Louisiana Environmental Laboratory Accreditation Program (LELAP) to verify the laboratory's scope of accreditation and accreditation status. Accreditation by the State of Louisiana is not an endorsement or a guarantee of validity of the data generated by the laboratory, and does not constitute an endorsement of the suitability of the listed methods for any specific application.

To be accredited initially and maintain accreditation, the laboratory agrees to participate in two single-blind, single-concentration PT studies, where available, per year for each field of testing for which it seeks accreditation or maintains accreditation as required in LAC 33:I.4711.

Melvin C. Mitchell Sr., Accreditation Officer
Louisiana Environmental Laboratory Accreditation Program

Certificate Number: 01964
Expiration Date: June 30, 2008
Issued On: July 1, 2007

CERTIFICATE OF APPROVAL

This is to certify that the Quality Management System of:

GE Energy Management Services, Inc.
Elmhurst, Illinois, USA

has been approved by Lloyd's Register Quality Assurance to the following Quality Management System Standards:

ISO 9001:2000

The Quality Management System is applicable to:

Air Emission Testing for Industry.

This certificate is valid only in association with the certificate schedule bearing the same number on which the locations applicable to this approval are listed.

Approval
Certificate No: UQA 0113578

Original Approval:	September 10, 2004
Current Certificate:	November 30, 2007
Certificate Expiry:	September 10, 2010

Issued by: LRQA, Inc. Houston

ANAB ACCREDITED

This document is subject to the provision on the reverse
1401 Enclave Parkway, Suite 200, Houston, Texas 77077, USA
This approval is carried out in accordance with the LRQA assessment and certification procedures and monitored by LRQA
Macro Revision 13

CERTIFICATE SCHEDULE

GE Energy Management Services, Inc.

Locations	Activities
Corporate Elmhurst, Illinois, USA	Air Emission Testing for Industry.
Eagan Site Eagan, Minnesota, USA	Scheduling, Small Scale Contract Review, Service Provision, Test Labs, Report Generation.
Griffith Site Griffith, Indiana, USA	Scheduling, Small Scale Contract Review, Service Provision.
Morrisville Site Morrisville, North Carolina, USA	Scheduling, Small Scale Contract Review, Service Provision.
Houston Site Houston, Texas, USA	Scheduling, Small Scale Contract Review, Service Provision.
Santa Ana Site Santa Ana, California, USA	Scheduling, Small Scale Contract Review, Service Provision/Report Generation.

Approval
Certificate No: UQA 0113578

Original Approval:	September 10, 2004
Current Certificate:	November 30, 2007
Certificate Expiry:	September 10, 2010

Page 1 of 1

ANAB ACCREDITED

Approval Certificate No: UQA 0113578
This document is subject to the provision on the reverse
1401 Enclave Parkway, Suite 200, Houston, Texas 77077, USA
This approval is carried out in accordance with the LRQA assessment and certification procedures and monitored by LRQA
Issue Revision 11