METCO ENVIRONMENTAL
P.O. Box 598
Addison, TX 75001
(972) 931-7127

LELAP Certificate # 02034

SOURCE EMISSIONS SURVEY
OF
VALERO REFINING - NEW ORLEANS, L. L. C.
ST. CHARLES REFINERY
THERMAL OXIDIZER NUMBER 2 STACK (EQT 196)
NORCO, LOUISIANA

JANUARY 2008

FILE NUMBER 08-18

"I certify that I have personally checked and am familiar with the information submitted herein, and based on my inquiries of those individuals immediately responsible for obtaining the information, I believe the submitted information is true, accurate, and complete."

James R. Monfries
Senior Quality Assurance Manager

TABLE OF CONTENTS

	PAGE
INTRODUCTION	1
SUMMARY OF RESULTS	2
DISCUSSION OF RESULTS	5
DESCRIPTION OF PROCESS	7
DESCRIPTION OF SAMPLING LOCATION	8
SAMPLING AND ANALYTICAL PROCEDURES	10
DESCRIPTION OF TESTS	19
APPENDICES	20

A. Location of Sampling Points
B. Source Emission Calculations
C. Calibration Data
D. Field Testing Data
E. Analytical Data
F. Reference Method Monitors Data
G. Plant Operational Data
H. Chain of Custody
I. Resumes of Test Personnel

SOURCE EMISSIONS SURVEY
OF
VALERO REFINING - NEW ORLEANS, L. L. C.
ST. CHARLES REFINERY
THERMAL OXIDIZER NUMBER 2 STACK (EQT 196)
NORCO, LOUISIANA
FILE NUMBER 08-18

INTRODUCTION

METCO Environmental, 6655 Complex Drive, Baton Rouge, Louisiana, conducted a source emissions survey of Valero Refining – New Orleans, L. L. C., St. Charles Refinery, located at 14902 River Road, Norco, Louisiana, on January 17 and 18, 2008. The purpose of these tests was to determine the concentrations of particulate matter, sulfur dioxide, oxides of nitrogen, carbon monoxide, and total hydrocarbons being emitted to atmosphere via the Thermal Oxidizer Number 2 Stack (EQT 196). Three tests were performed while the unit was operating at an average unit production rate of 281.01 LTon/day.

The sampling was performed by the following METCO personnel: Daniel Moore – Project Supervisor, Ryan Williams, Paul Nehring, and Chris Perez.

The sampling followed the procedures set forth in the Code of Federal Regulations, Title 40, Chapter I, Part 60, Appendix A, Methods 1, 2, 3A, 3B, 4, 5, 6C, 7E, 10, and 25A.

SUMMARY OF RESULTS

Thermal Oxidizer Number 2 Stack (EQT 196)

Run Number	Particulate Matter Emissions (gr/dscf*)	(lbs/hr)	(lbs/mmBtu)	Oxides of Nitrogen Emissions (dry ppm)	(lbs/hr)	(lbs/mmBtu)	Sulfur Dioxide Emissions (dry ppm**)	(lbs/hr)	(lbs/mmBtu)
1	0.0008	0.15	0.006	10.73	1.63	0.062	1.23	0.16	0.006
2	0.0025	0.46	0.018	11.20	1.72	0.066	5.53	0.75	0.029
3	0.0002	0.03	0.001	10.74	1.65	0.061	8.41	1.12	0.041
Average	0.0012	0.21	0.008	10.89	1.67	0.063	3.17	0.68	0.025
Allowable Emission Rate	-------	≤ 1.4	-----	------	≤ 9.6	-----	≤ 250	≤ 114	-----

Run Number	Carbon Monoxide Emissions (dry ppm)	(lbs/hr)	(lbs/mmBtu)	Total Hydrocarbons Emissions as Propane (dry ppm)	(lbs/hr)	(lbs/mmBtu)
1	50.15	4.65	0.177	< 0.01	< 0.01	<0.001
2	49.29	4.60	0.177	< 0.01	< 0.01	<0.001
3	47.61	4.46	0.165	< 0.01	< 0.01	<0.001
Average	49.02	4.57	0.173	< 0.01	< 0.01	<0.001
Allowable Emission Rate	-----	≤ 6.1	-----	------	≤ 0.3	-----

* 29.92 "Hg, 68°F (760 mm Hg, 20°C)

** Corrected to 0% oxygen

METCO ENVIRONMENTAL

SUMMARY OF RESULTS

Thermal Oxidizer Number 2 Stack (EQT 196)

Run Number	1	2	3
Date	01/18/08	01/18/08	01/18/08
Time	1033-1206	1257-1432	1450-1622
Stack Flow Rate - ACFM	68,617	69,594	69,569
Stack Flow Rate - DSCFM*	21,262	21,431	21,473
% Water Vapor - % Vol.	8.18	8.75	8.57
% CO_2 - % Vol.	3.6	3.7	3.7
% O_2 - % Vol. (orsat)	7.6	7.5	7.6
% O_2 - % Vol. (monitor)	8.00	7.60	7.93
% Excess Air @ Sampling Point	47.7	46.8	47.8
Stack Temperature - °F	1,122	1,122	1,122
Stack Pressure - "Hg	30.15	30.15	30.15
Percent Isokinetic	97.8	97.7	97.0
Unit Heat Input – mmBtu/hr	26.22	26.09	27.05
Particulates Matter Emissions Probe & Filter Catch grains/dscf*	0.0008	0.0025	0.0002
grains/cf @ Stack Conditions	0.0003	0.0008	0.0001
lbs/hr	0.15	0.46	0.03
lbs/mmBtu	0.006	0.018	0.001

* 29.92 "Hg, 68°F (760 mm Hg, 20°C)

SUMMARY OF RESULTS

Thermal Oxidizer Number 2 Stack (EQT 196)

Run Number	1	2	3
Oxides of Nitrogen Emissions - dry ppm	10.73	11.20	10.74
Oxides of Nitrogen Emissions - lbs/hr	1.63	1.72	1.65
Oxides of Nitrogen Emissions - lbs/mmBtu*	0.062	0.066	0.061
Sulfur Dioxide Emissions - dry ppm	0.76	3.52	5.22
Sulfur Dioxide Emissions - dry ppm**	1.23	5.53	8.41
Sulfur Dioxide Emissions - lbs/hr	0.16	0.75	1.12
Sulfur Dioxide Emissions - lbs/mmBtu*	0.006	0.029	0.041
Carbon Monoxide Emissions - dry ppm	50.15	49.29	47.61
Carbon Monoxide Emissions - lbs/hr	4.65	4.60	4.46
Carbon Monoxide Emissions - lbs/mmBtu*	0.177	0.177	0.165
Total Hydrocarbons Emissions as Propane - wet ppm	< 0.01	< 0.01	< 0.01
Total Hydrocarbons Emissions as Propane - dry ppm	< 0.01	< 0.01	< 0.01
Total Hydrocarbons Emissions as Propane - lbs/hr	< 0.01	< 0.01	< 0.01
Total Hydrocarbons Emissions as Propane - lbs/mmBtu	< 0.001	< 0.001	< 0.001

* Calculated using an Fd factor of 8,710.

** Corrected to 0% oxygen

DISCUSSION OF RESULTS

The three tests for particulate matter, sulfur dioxide, oxides of nitrogen, carbon monoxide, and total hydrocarbons appeared to be valid representations of the actual emissions during the tests. All leak checks performed on the sampling train, the pitot tubes, and the reference method monitors sampling systems showed no leaks before or after each test. The zero and calibration drift tests of the reference method monitors were stable with no variations greater than 3.0 percent. The calibration error check, sampling system bias check, and NO_2 to NO conversion efficiency check performed on the reference method monitors prior to testing were valid. The indicative parameters calculated from the field data were in close agreement. The moisture percentages for the three tests were within 3.8 percent of the mean value. The measured flow rates (Q_s) for the tests were within 0.6 percent of the mean value. The rates of sampling for the three tests were within the specified limits (90 to 110 percent isokinetic). The greatest deviation from 100 percent was 3.0 percent.

The NO_2 to NO conversion efficiency check was performed prior to testing on January 18, 2008, from 0844-0914. The results were as follows:

Highest peak value observed: 17.4 ppm
Value observed after 30 minutes: 17.4 ppm
NO_2 to NO conversion efficiency (%) = (Value observed after 30 minutes/Highest peak value observed) x 100
(17.4/17.4) x 100 = 100.0%

The required allowable as found in 40 CFR, Part 60, Appendix A, Method 7E, is 98.0%. Therefore, the NO_2 to NO conversion efficiency check was valid.

The calculated emissions (pounds per hour) of particulate matter for the three tests showed a range of -85.9 percent to +115.6 percent variation from the mean value. The large variation was due to the higher particulate matter concentrations measured during Run Number 2.

The calculated emissions (pounds per hour) of oxides of nitrogen for the three tests showed a range of -2.2 percent to +3.2 percent variation from the mean value.

The calculated emissions (pounds per hour) of sulfur dioxide for the three tests showed a range of -76.4 percent to +65.5 percent variation from the mean value. The large variation was due to the lower concentrations of sulfur dioxide measured during Run Number 1.

The calculated emissions (pounds per hour) of carbon monoxide for the three tests showed a range of -2.4 percent to +1.8 percent variation from the mean value.

The concentrations of total hydrocarbons for the three tests were below the minimum detectable limit of the method.

DESCRIPTION OF PROCESS

Valero utilizes two thermal oxidizers to thermally destroy gaseous vapor from the sulfur recovery units (TOX1 for SRU 37 and SRU 16; TOX2 for SRU 30). The thermal oxidizers are fueled with refining fuel gas and are equipped with a "dry" basis SO_2/O_2 CEMS that measures flue gas concentration downstream of the combustion chamber prior to discharge to the atmosphere.

DESCRIPTION OF SAMPLING LOCATION

The sampling location on the Thermal Oxidizer Number 2 Stack (EQT 196) is approximately 124 feet above the ground. The sampling ports are located 66 feet (7.94 stack diameters) downstream from a constriction in the stack and 9 feet 3 inches (1.11 stack diameters) upstream from a constriction in the stack.

SAMPLING LOCATION

Thermal Oxidizer Number 2 Stack (EQT 196)

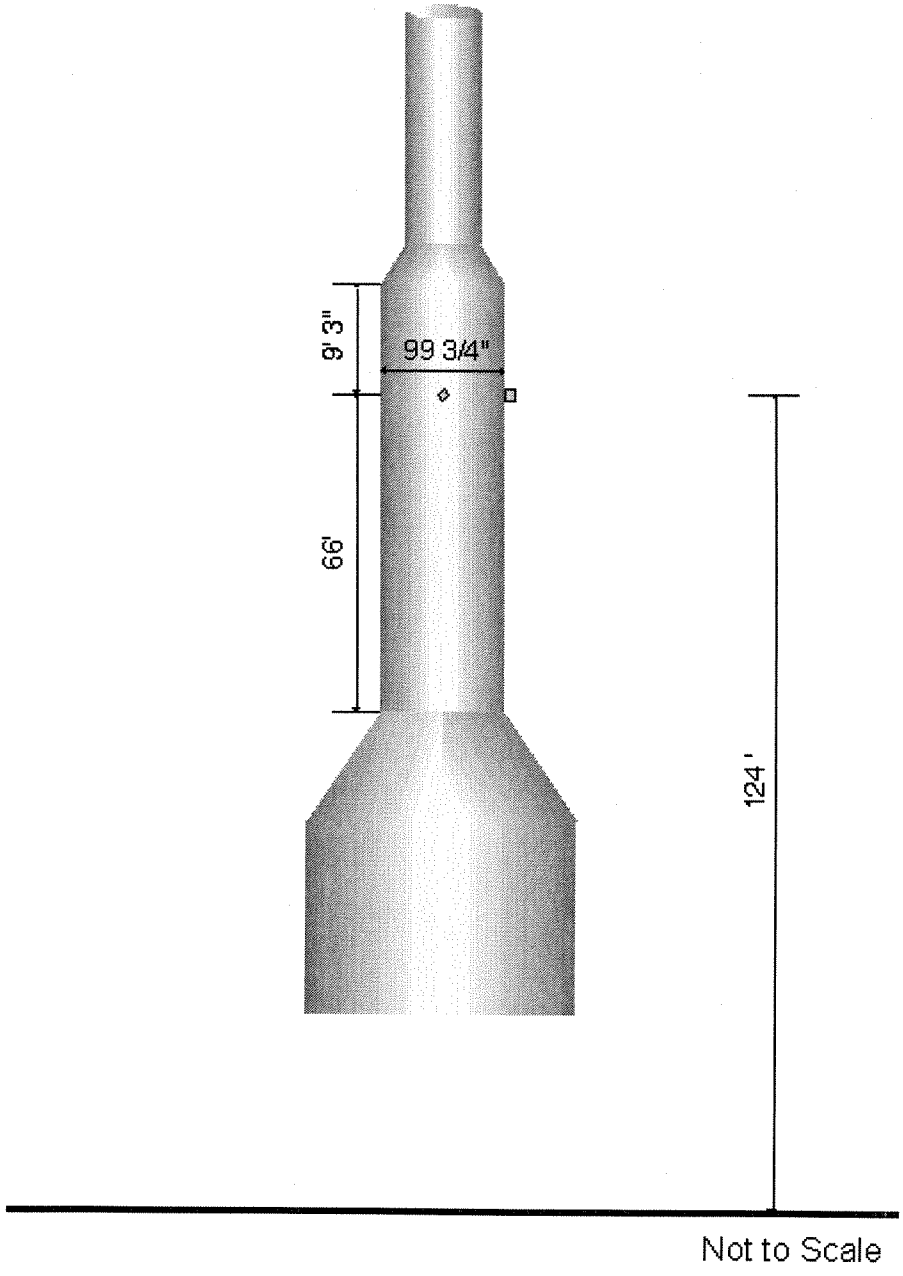

SAMPLING AND ANALYTICAL PROCEDURES

The sampling followed the procedures set forth in the Code of Federal Regulations, Title 40, Chapter I, Part 60, Appendix A, Methods 1, 2, 3A, 3B, 4, 5, 6C, 7E, 10, and 25A.

A preliminary velocity traverse was made at each of the four ports on the stack, in order to determine the uniformity and magnitude of the flow prior to testing. Several traverse points were checked for cyclonic flow and none were found to be present. Six traverse points were sampled from each of the four ports for a total of twenty-four traverse points.

The sampling train was leak-checked at the nozzle before each test, and again after each test. This was done to predetermine the possibility of a diluted sample.

The pitot tube lines were checked for leaks before and after each test under both a vacuum and a pressure. The lines were also checked for clearance and the manometer was zeroed before each test.

A grab orsat sample was collected and analyzed according to EPA Method 3B during each test.

Particulate Matter

Triplicate samples for particulate matter were collected. The samples were taken according to EPA Methods 1, 2, 3B, 4, and 5. For each run, samples of three-minute

duration were taken isokinetically at each of the twenty-four traverse points for a total sampling time of 72 minutes. Reagent blanks were submitted.

The "front-half" of the sampling train contained the following components:

Quartz Nozzle
Air Cooled Quartz Probe @ 248°F ± 25°F
Heated Glass Fiber Filter and Glass Support @ 248°F ± 25°F

The "back-half" of the sampling train contained the following components:

Impinger Number	Contents	Amount	Parameter Collected
1	Deionized Water	100 ml	Moisture
2	Deionized Water	100 ml	Moisture
3	Empty	--------	Moisture
4	Silica Gel	200 g	Moisture

Particulate matter emissions were calculated from gravimetric analysis using only the " front-half " collections of the sampling train.

Oxides of Nitrogen

The oxides of nitrogen sampling was performed according to EPA Method 7E. A Thermo Environmental Model 42I Oxides of Nitrogen Analyzer (Serial Number 0628919043) was used to monitor the concentrations of oxides of nitrogen during each run. The reference method analyzer was operated in the NO_x mode at a range of 0 to 100 parts per million, with a calibration span of 92.7 parts per million. A multi-point calibration was performed on the reference method analyzer prior to testing. An analyzer calibration error check, a sampling system bias check, and a NO_2 to NO conversion efficiency check were also conducted prior to testing. After each run, the zero and calibration drift of the reference method monitor was checked.

The calibration gases were as follows:

Zero Nitrogen

43.4 ppm NO in N_2 (ALM 706)

92.7 ppm NO in N_2 (BLM 3539)

The reference method sampling system consisted of a heated probe, a chilled condenser, and a Teflon sample line. The calibration gases for the bias and drift checks were introduced upstream of the chilled condenser.

Calibration gas certifications are included in Appendix C.

Sulfur Dioxide

The sulfur dioxide sampling was performed according to EPA Method 6C. A Western Research Model 721M Sulfur Dioxide Analyzer (Serial Number 94-721M-8178-2) was used to monitor the concentrations of sulfur dioxide during each run. The reference method analyzer was operated at a range of 0 to 100 parts per million, with calibration spans of 95.0 part per million. A multi-point calibration was performed on the reference method analyzer prior to testing. An analyzer calibration error check and a sampling system bias check were also conducted prior to testing. After each run, the zero and calibration drift of the reference method monitor was checked.

The calibration gases were as follows:

Zero Nitrogen

43.3 ppm SO_2 in N_2 (ALM 58635)

95.0 ppm SO_2 in N_2 (BLM 2895)

The reference method sampling system consisted of a heated probe, a chilled condenser, and a Teflon sample line. The calibration gases for the bias and drift checks were introduced upstream of the chilled condenser.

Calibration gas certifications are included in Appendix C.

Carbon Monoxide

The carbon monoxide sampling was performed according to EPA Method 10 using the continuous sampling procedure. A Thermo Environmental Model 48I Carbon Monoxide Analyzer (Serial Number 0618717294) was used to monitor the concentrations of carbon monoxide during each run. The reference method analyzer was operated at a range of 0 to 100 parts per million, with a calibration span of 84.30 parts per million. A multi-point calibration was performed on the reference method analyzer prior to testing. An analyzer calibration error check and a sampling system bias check were also conducted prior to testing. After each run, the zero and calibration drift of the reference method monitor was checked.

The calibration gases were as follows:

Zero Nitrogen

42.70 ppm CO in N_2 (ALM 46180)

84.30 ppm CO in N_2 (AAL 9563)

The reference method sampling system consisted of a heated probe, a chilled condenser, and a Teflon sample line. The calibration gases for the bias and drift checks were introduced upstream of the chilled condenser.

Calibration gas certifications are included in Appendix C.

Total Hydrocarbons

The total hydrocarbons sampling was performed according to EPA Method 25A. A J.U.M. Model VE-7 Total Hydrocarbon Analyzer (Serial Number 00051196-10) was used to monitor the concentrations of total hydrocarbons during the run. The reference method analyzer was operated at a range of 0 to 100 parts per million. A multi-point calibration was performed on the reference method analyzer prior to testing. An analyzer calibration error check and a sampling system bias check were also conducted prior to testing. After each run, the zero and calibration drift of the reference method monitor was checked.

The calibration gases were as follows:

Zero Nitrogen
30.0 ppm C_3H_8 in N_2 (BAL 837)
47.8 ppm C_3H_8 in N_2 (ALM 54530)
85.7 ppm C_3H_8 in N_2 (BLM 800)

The reference method sampling system consisted of a heated probe and a heated Teflon sample line. The calibration gases for the bias and drift checks were introduced upstream of the heated Teflon sample line.

Calibration gas certifications are included in Appendix C.

Oxygen

The oxygen sampling was performed according to EPA Method 3A. A Horiba Model

VA-3000 Oxygen Analyzer (Serial Number F0L04909) was used to monitor the concentrations of oxygen during each run. The reference method analyzer was operated at a range of 0 to 25 percent, with a calibration span of 20.9 percent. A multi-point calibration was performed on the reference method analyzer prior to testing. An analyzer calibration error check and a sampling system bias check were also conducted prior to testing. After each run, the zero and calibration drift of the reference method monitor was checked.

The calibration gases were as follows:

Zero Nitrogen
11.90 percent O_2 in N_2 (ALM 43295)
20.90 percent O_2 in air (ALM 52022)

The reference method sampling system consisted of a heated probe, a chilled condenser, and a Teflon sample line. The calibration gases for the bias and drift checks were introduced upstream of the chilled condenser.

Calibration gas certifications are included in Appendix C.

Schematic Diagram of the EPA Method 5 Sampling Train

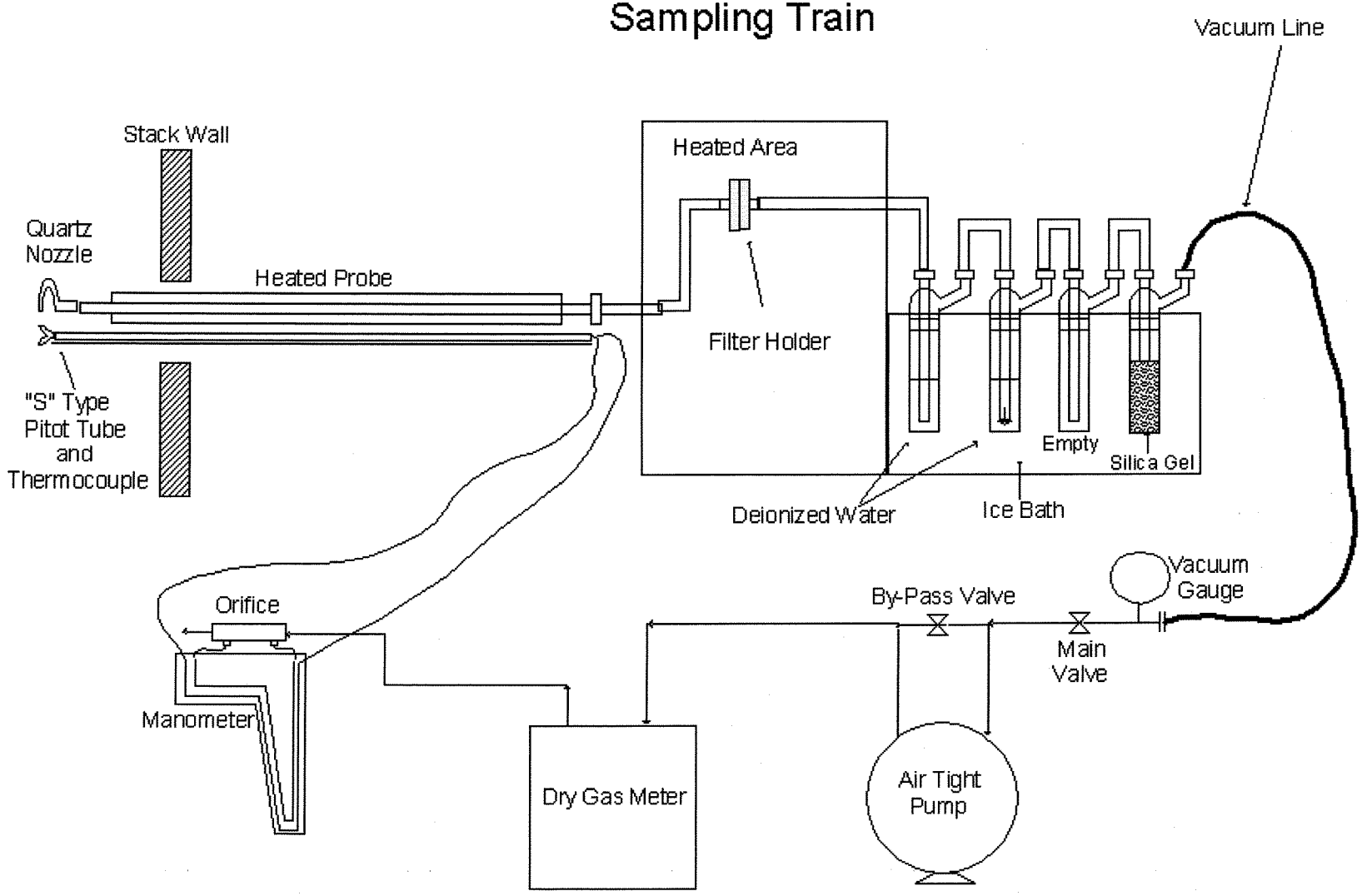

METCO ENVIRONMENTAL

Reference Method Monitors Sampling System (EPA Methods 3A, 6C, 7E, and 10)

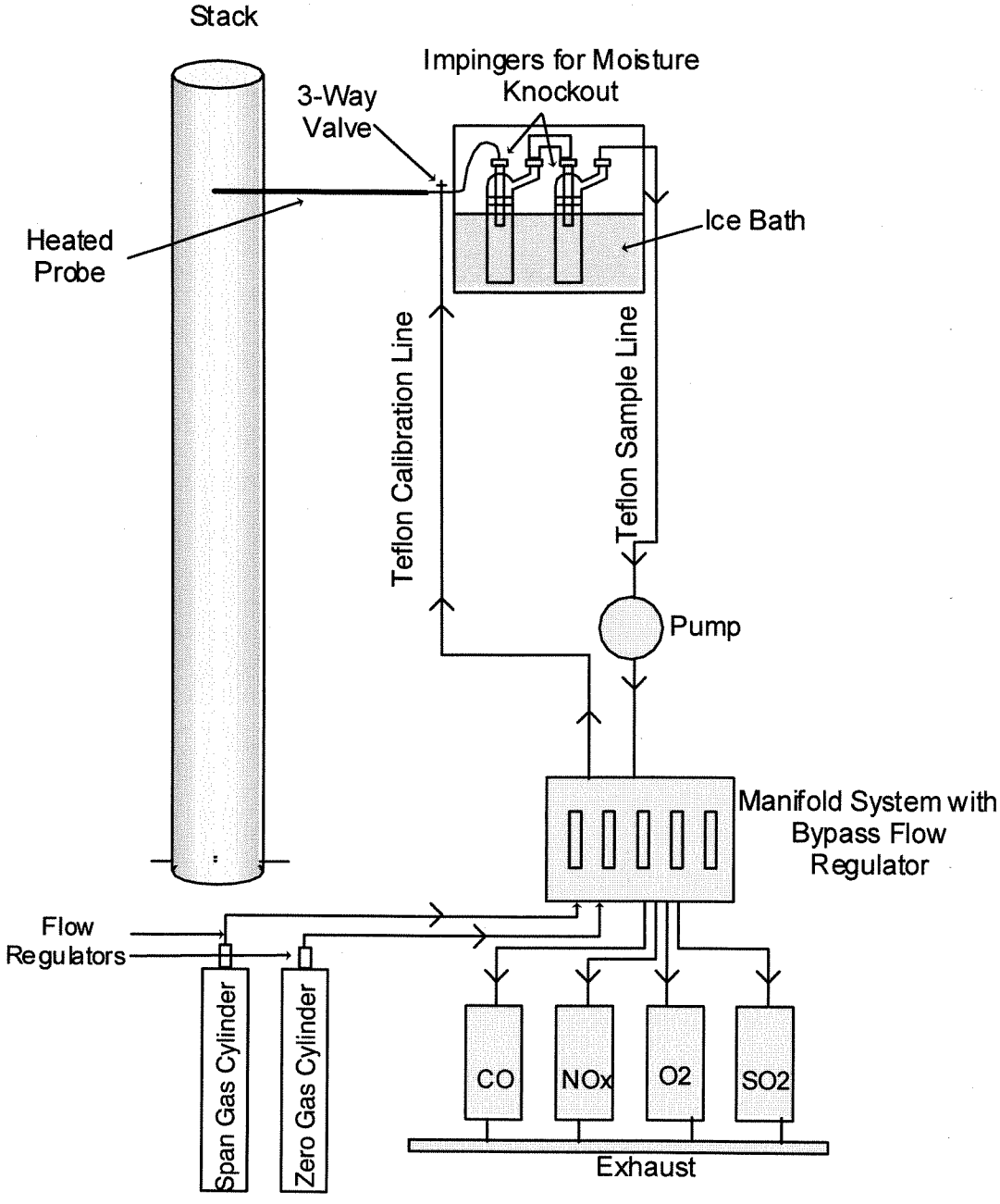

Reference Method Monitor Sampling System (EPA Method 25A)

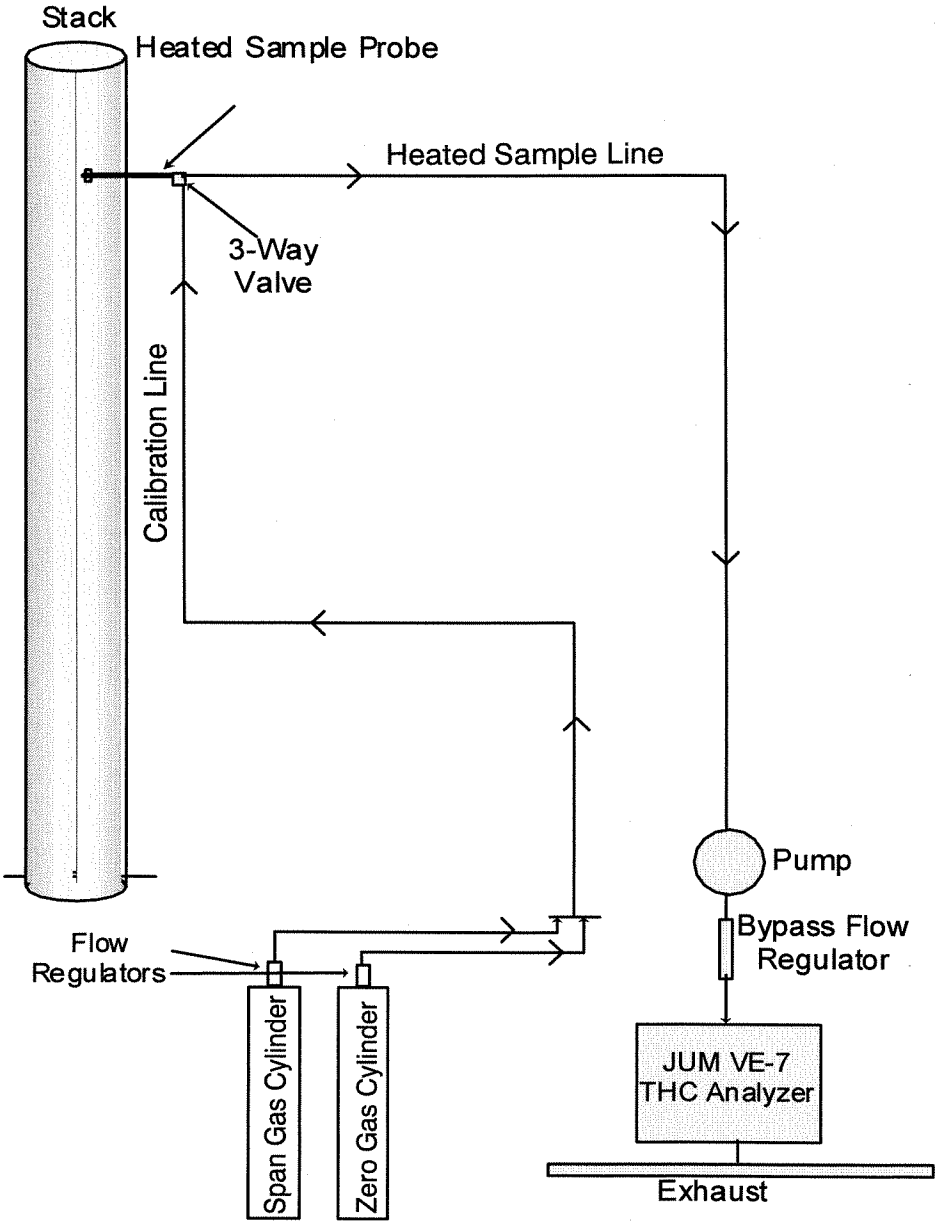

DESCRIPTION OF TESTS

Personnel from METCO Environmental arrived at the plant at 11:15 a.m. on Thursday, January 17, 2008. After meeting with plant personnel, the equipment was moved onto the Thermal Oxidizer Number 2 Stack (EQT 196). The equipment was secured for the night and all work was completed at 4:30 p.m.

On Friday, January 18, work began at 7:15 a.m. The reference method monitors were calibrated and the equipment was prepared for testing. The NO_2 to NO conversion efficiency check was performed. The first test for particulate matter, sulfur dioxide, oxides of nitrogen, carbon monoxide, and total hydrocarbons began at 10:33 a.m. Testing continued until the completion of the third test at 4:22 p.m.

The reference method monitors were calibrated and secured for transport. The equipment was moved off of the stack and loaded into the sampling van. The samples were recovered and transported to METCO Environmental's laboratory in Dallas, Texas, for further evaluation.

Testing at Valero Refining – New Orleans, L. L. C., St. Charles Refinery, Thermal Oxidizer Number 2 Stack (EQT 196), located in Norco, Louisiana, were completed at 6:45 p.m. on Friday, January 18, 2008.

APPENDICES

A. Location of Sampling Points
B. Source Emissions Calculations
C. Calibration Data
D. Field Testing Data
E. Analytical Data
F. Reference Method Monitors Data
G. Plant Operational Data
H. Chain of Custody
I. Resumes of Test Personnel

APPENDIX A

Location of Velocity Sampling Points
Thermal Oxidizer Number 2 Stack (EQT 196)

The sampling ports are located 66 feet (7.94 stack diameters) downstream from a constriction in the stack and 9 feet 3 inches (1.11 stack diameters) upstream from a constriction in the stack. The locations of the sampling points were calculated as follows:

Port and Wall Thickness	=	11 1/2 inches
Inside Stack Diameter	=	99 3/4 inches

Point Number	Percent of Diameter From Wall	Distance From Wall
1	4.4	4 3/8 "
2	14.6	14 9/16 "
3	29.6	29 1/2 "
4	70.4	70 1/4 "
5	65.4	85 3/16 "
6	95.6	95 3/8 "

APPENDIX A

Location of Velocity Sampling Points
Thermal Oxidizer Number 2 Stack (EQT 196)

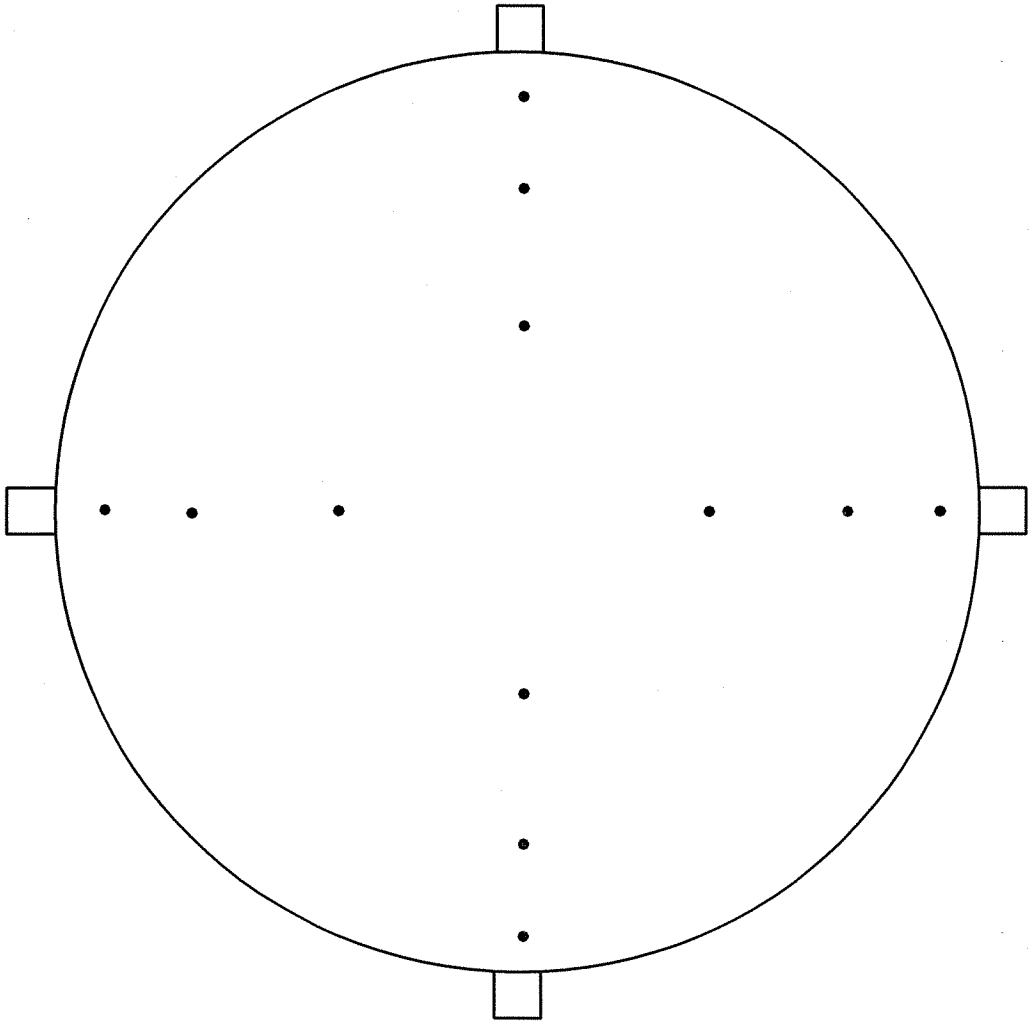

APPENDIX A

Location of Reference Method Monitor Sampling Points
Thermal Oxidizer Number 2 Stack (EQT 196)

The sampling ports are located 66 feet (7.94 stack diameters) downstream from a constriction in the stack and 9 feet 3 inches (1.11 stack diameters) upstream from a constriction in the stack. The locations of the sampling points were calculated as follows:

Port and Wall Thickness	=	11 1/2 inches
Inside Stack Diameter	=	99 3/4 inches

Point Number	Percent Distance From Wall	Distance From Wall
1	16.7	16 11/16"
2	50.0	49 7/8"
3	83.3	83 1/16"

APPENDIX A

Location of Reference Method Monitor Sampling Points
Thermal Oxidizer Number 2 Stack (EQT 196)

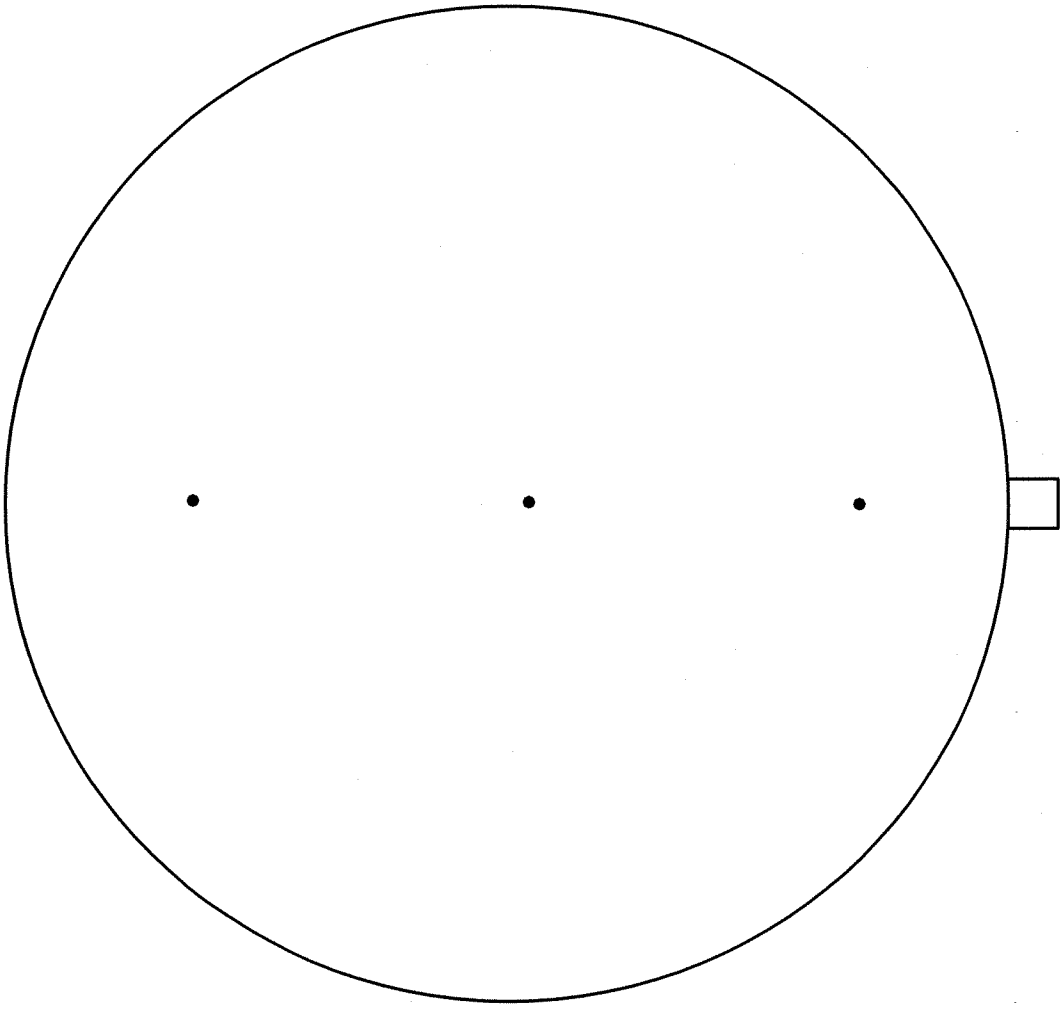

APPENDIX B

Nomenclature and Equations
for
Calculation of Source Emissions

NOMENCLATURE FOR PARTICULATE CALCULATIONS

Symbol	English Units	Metric Units	Description
A_s	$in.^2$	m^2	Stack Area
C_{an}	gr/dscf*	g/dscm*	Particulate - probe, cyclone, and filter
C_{ao}	gr/dscf*	g/dscm*	Particulate - total
C_{at}	gr/CF @ stack conditions	g/m^3	Particulate - probe, cyclone, and filter
C_{au}	gr/CF @ stack conditions	g/m^3	Particulate - total
C_{aw}	lbs/hr	kg/hr	Particulate - probe, cyclone, and filter
C_{ax}	lbs/hr	kg/hr	Particulate - total
C_p			Pitot Tube Calibration Factor
D_n	in.	m	Sampling Nozzle Diameter
%EA			Percent Excess Air at sampling point
g	32.174 ft/sec^2		Acceleration of Gravity
%I			Percent Isokinetic
%M			Percent Moisture in the stack gas by volume
M_d			Mole fraction of dry gas

* 29.92 " Hg, 68° F (760 mm Hg, 20° C)

Symbol	English Units	Metric Units	Description
m_f	mg	mg	Particulate - probe, cyclone, and filter
M_{water}	18 lb/lb-mole		Molecular Weight of water
m_t	mg	mg	Particulate - total
MW	lb/lb-mole	g/g-mole	Molecular Weight of stack gas
MW_{air}	28.96 lb/ lb-mole		Molecular Weight of air
MW_d	lb/lb-mole	g/g-mole	Molecular Weight of dry stack gas
P_b	"Hg Absolute	mm Hg	Barometric Pressure
P_m	"H_2O	mm H_2O	Orifice Pressure drop
P_s	"Hg Absolute	mm Hg	Stack Pressure
ΔP	"H_2O	mm H_2O	Velocity Head of stack gas
P_{std}	29.92 "Hg	760 mm Hg	Standard Barometric Pressure
Q_a	ACFM	m^3/hr	Stack Gas Volume at actual stack conditions
Q_s	DSCFM*	dscm/hr*	Stack Gas Volume at 29.92 "Hg, 528°R, dry
R	21.83 "Hg-ft^3/lb-mole°R		Universal Gas Constant
T_m	°F	°C	Average Gas Meter Temperature

* 29.92 " Hg, 68° F (760 mm Hg, 20° C)

Symbol	English Units	Metric Units	Description
T_t	min	min	Net time of test
T_s	°F	°C	Stack Temperature
T_{std}	528°R	293°K	Standard Temperature
V_m	ft^3	m^3	Volume of dry gas sampled @ meter conditions
Vm_{std}	dscf*	dscm*	Volume of dry gas sampled @ standard conditions
V_s	fpm	m/sec	Stack velocity @ stack conditions
V_w	ml	ml	Total water collected in impingers and silica gel
Vw_{gas}	scf*	scm*	Volume of water vapor collected @ standard conditions
ρ_{air}	0.0752 lbs/ft^3		Density of Air
ρ_{water}	1 g/ml		Density of Water
ρ_{man}	62.32 lbs/ft^3		Density of Manometer Oil

Standard Conditions: 29.92 "Hg, 68°F (760 mm Hg, 20°C)

* 29.92 " Hg, 68° F (760 mm Hg, 20° C)

EXAMPLE CALCULATIONS

1. Volume of dry gas sampled at standard conditions. *

$$Vm_{std} = Vm \left(\frac{T_{std}}{T_m + 460} \right) \left[\frac{P_b + \frac{P_m}{13.6}}{P_{std}} \right]$$

$$Vm_{std} = 17.65\, Vm \left[\frac{P_b + \frac{P_m}{13.6}}{T_m + 460} \right] = dscf$$

$$Vm_{std} = dscf \times 0.028317 = dscm$$

2. Volume of water vapor collected at standard conditions. *

$$Vw_{gas} = \frac{(V_w - gms\ SO_2 - gms\ H_2S)\ \rho_{water}\ R\ T_{std}}{P_{std}\ M_{water}\ 453.6}$$

$$Vw_{gas} = 0.0472\ (V_w - gms\ SO_2 - gms\ H_2S) = scf$$

$$Vw_{gas} = scf \times 0.028317 = scm$$

3. Percent moisture in stack gas.

$$\%M = \frac{Vw_{gas}}{Vm_{std} + Vw_{gas}} \times 100 = \%$$

* 29.92 " Hg, 68° F (760 mm Hg, 20° C)

4. Mole fraction of dry gas.

$$M_d = \frac{100 - \%M}{100}$$

5. Average molecular weight of dry stack gas.

$$MW_d = \left[\%CO_2 \times \frac{44}{100}\right] + \left[\%O_2 \times \frac{32}{100}\right] + \left[\%N_2 \times \frac{28}{100}\right] + \left[\%CO \times \frac{28}{100}\right] = lb/lb\text{-}mole$$

$$= g/g\text{-}mole$$

6. Molecular weight of stack gas.

$$MW = MW_d \times M_d + 18\,(1 - M_d) = \frac{lb}{lb\text{-}mole} = g/g\text{-}mole$$

7. Percent excess air at sampling point.

$$\%EA = \frac{100\,[\%O_2 - (0.5\,\%CO)]}{0.265\,(\%N_2) - [\%O_2 - (0.5\,\%CO)]}$$

8. Stack Pressure.

$$P_s = P_b + \frac{Stack\ Pressure\ "H_2O}{13.6} = "Hg\ Absolute$$

$$P_s = "Hg\ Abs. \times 25.4 = mm\ Hg$$

9. Stack velocity at stack conditions.

$$V_s = C_p\, 60 \left[\frac{2g \times \rho_{man} \times P_{std} \times MW_{air} \times (T_s + 460)}{12 \times \rho_{air} \times P_s \times MW \times T_{std}} \right]^{1/2} \times \sqrt{\Delta P}\ average$$

$$V_s = 5{,}123.8\, C_p \left[\frac{(T_s + 460)}{P_s \times MW} \right]^{1/2} \sqrt{\Delta P}\ average = fpm$$

$$V_s = fpm \times 0.00508 = m/sec$$

10. Dry stack gas volume at standard conditions. *

$$Q_s = \frac{1}{144} V_s \times A_s \times M_d \times \frac{T_{std}}{T_s + 460} \times \frac{P_s}{P_{std}}$$

$$Q_s = \frac{0.123\, V_s \times A_s \times M_d \times P_s}{T_s + 460} = DSCFM$$

$$Q_s = DSCFM \times 1.6990 = dscm/hr$$

11. Actual stack gas volume at stack conditions.

$$Q_a = \frac{V_s \times A_s}{144} = ACFM$$

$$Q_a = ACFM \times 1.6990 = m^3/hr$$

* 29.92 " Hg, 68° F (760 mm Hg, 20° C)

12. Percent Isokinetic.

$$\%I = \frac{Vm_{std} \times (T_s + 460) \times P_{std} \times 100 \times 144\ in^2/ft^2}{M_d \times T_{std} \times P_s \times T_t \times V_s (\frac{\pi \times D_n^2}{4})}$$

$$\%I = \frac{1039 \times Vm_{std} \times (T_s + 460)}{M_d \times P_s \times T_t \times V_s \times D_n^2}$$

13. Particulate – probe, cyclone, and filter.

$$C_{an} = \frac{m_f}{Vm_{std}} \times \frac{1\ gr}{64.8\ mg}$$

$$C_{an} = 0.0154 \times \frac{m_f}{Vm_{std}} = gr/dscf\ *$$

$$C_{an} = gr/dscf \times 2.290 = g/dscm\ *$$

14. Particulate total.

$$C_{ao} = 0.0154 \times \frac{m_t}{Vm_{std}} = gr/dscf\ *$$

$$C_{ao} = gr/dscf \times 2.290 = g/dscm\ *$$

* 29.92 " Hg, 68° F (760 mm Hg, 20° C)

15. Particulate – probe, cyclone, and filter at stack conditions.

$$C_{at} = C_{an} \times \frac{P_s}{P_{std}} \times \frac{(T_{std})}{(T_s + 460)} \times M_d$$

$$C_{at} = \frac{17.65 \times C_{an} \times P_s \times M_d}{T_s + 460} = gr/CF$$

$$C_{at} = gr/CF \times 2.290 = gr/m^3$$

16. Particulate – total, at stack conditions.

$$C_{au} = \frac{17.65 \times C_{ao} \times P_s \times M_d}{T_s + 460} = gr/CF$$

$$C_{au} = gr/CF \times 2.290 = gr/m^3$$

17. Particulate – probe, cyclone, and filter.

$$C_{aw} = C_{an} \times Q_s \times \frac{60\ min}{1\ hr} \times \frac{1\ lb}{7000\ gr}$$

$$C_{aw} = 0.00857 \times C_{an} \times Q_s = lbs/hr$$

$$C_{aw} = lbs/hr \times 0.4536 = kg/hr$$

18. Particulate – total.

$C_{ax} = 0.00857 \times C_{ao} \times Q_s = lbs/hr$

$C_{ax} = lbs/hr \times 0.4536 = kg/hr$

EXAMPLE CALCULATIONS

lbs/hr = ppm x CF x 60 min/hr x DSCFM*

CF = Conversion Factor for ppm to lbs/scf*

Compound	Conversion Factor
NO_x	1.194×10^{-7}
CO	7.273×10^{-8}
SO_2	1.660×10^{-7}
THC as Propane	1.145×10^{-7}

* 29.92 "Hg, 68°F (760 mm Hg, 20°C)

$$\text{lbs/million Btu} = \frac{\text{lbs/hr}}{\text{Unit Heat Input million Btu/hr}}$$

EXAMPLE CALCULATIONS

$$E\ corr. = E\ meas. \times \frac{20.9\%\ O_2 - \%\ O_2\ corr.}{20.9\%\ O_2 - \%\ O_2\ meas.}$$

E corr. = Emission Rate corrected for Oxygen
E meas. = Emission Rate measured
% O_2 corr. = The Oxygen content to be corrected to (ie. 0.0% O_2)
% O_2 meas. = The Oxygen content measured

EXAMPLE CALCULATIONS

Equation 7E-5

$$C_{gas} = (\overline{C} - C_o)\ \frac{C_{ma}}{C_m - C_o}$$

Where: C_{gas} = Effluent gas concentration - dry basis (ppm)

$\overline{C}$ = Average gas concentration indicated by gas analyzer - dry basis (ppm)

C_o = Average of initial and final system calibration bias check responses for the zero gas (ppm)

C_m = Average of initial and final system calibration bias check responses for the upscale calibration gas (ppm)

C_{ma} = Actual concentration of the upscale calibration gas (ppm)

METCO ENVIRONMENTAL

SOURCE EMISSION SURVEY

JOB NUMBER: 08-18
JOB NAME: VALERO REFINING - NEW ORLEAN
LOCATION: NORCO, LOUISIANA
UNIT TESTED: THERMAL OXIDIZER NUMBER 2 STACK (EQT 196)

SOURCE EMISSION CALCULATIONS

			RUN NUMBER		
SYMBOL	DESCRIPTION	UNITS	1	2	3
DATE			01/18/08	01/18/08	01/18/08
BEGIN TIME			1033	1257	1450
END TIME			1206	1432	1622
P(b)	BAROMETRIC PRESSURE	"Hg Abs.	30.19	30.19	30.19
		(mm Hg)	(767.00)	(767.00)	(767.00)
P(m)	ORIFICE PRESSURE DROP	"H2O	1.180	1.205	1.206
		(mm H2O)	(30.000)	(30.600)	(30.600)
	DGM CALIBRATION FACTOR		1.014	1.014	1.014
V(m)	VOLUME DRY GAS SAMPLED	ft.^3	41.280	41.898	41.762
	@ METER CONDITIONS	(m^3)	(1.169)	(1.186)	(1.183)
	LEAK CHECK VOLUME	ft.^3	0.000	0.000	0.000
T(m)	AVERAGE GAS METER	DEG.F	74	78	79
	TEMPERATURE	(DEG.C)	(23)	(26)	(26)
V(m[std])*	VOLUME DRY GAS SAMPLED	DSCF	41.310	41.619	41.407
	@ STANDARD CONDITIONS*	(DSCM)	(1.170)	(1.179)	(1.173)
V(w)	TOTAL WATER COLLECTED, IMPINGERS & SILICA GEL	ml	78.0	84.6	82.2
V(w[gas])	VOLUME WATER VAPOR	SCF	3.682	3.993	3.880
	COLLECTED @ STANDARD	(SCM)	(0.104)	(0.113)	(0.110)
	CONDITIONS*				
%M	MOISTURE IN STACK GAS BY VOLUME	%	8.18	8.75	8.57
Md	MOL FRACTION OF DRY GAS		0.9182	0.9125	0.9143
Tt	NET TIME OF TEST	MINUTES	72	72	72

* 68 Deg.F, 29.92 "Hg (20 Deg.C, 760 mm Hg)

SOURCE EMISSION CALCULATIONS

JOB NUMBER: 08-18
JOB NAME: VALERO REFINING - NEW ORLEAN
LOCATION: NORCO, LOUISIANA
UNIT TESTED: THERMAL OXIDIZER NUMBER 2 STACK (EQT 196)

			RUN NUMBER		
SYMBOL	DESCRIPTION	UNITS	1	2	3
CO2		%	3.6	3.7	3.7
O2		%	7.6	7.5	7.6
CO		%	0.0	0.0	0.0
N2		%	88.8	88.8	88.7
%EA	EXCESS AIR @ SAMPLING POINT	%	47.7	46.8	47.8
MWd	MOLECULAR WEIGHT OF DRY STACK GAS	LB/LB-MOLE (g/g-MOLE)	28.88 (28.88)	28.89 (28.89)	28.90 (28.90)
MW	MOLECULAR WEIGHT OF STACK GAS	LB/LB-MOLE (g/g-MOLE)	27.99 (27.99)	27.94 (27.94)	27.96 (27.96)
Cp	PITOT TUBE CALIBRATION		0.801	0.801	0.801
DELTA P	VELOCITY HEAD OF STACK GAS	"H2O (mm H20)	0.051 (1.300)	0.052 (1.300)	0.052 (1.300)
DELTA P ^(1/2)		"H2O	0.225	0.228	0.228
Ts	STACK TEMPERATURE	DEG. F (DEG. C)	1,122 (606)	1,122 (606)	1,122 (606)
Ps	STACK PRESSURE	"Hg Abs. (mm Hg) "H20	30.15 (766.00) -0.60	30.15 (766.00) -0.60	30.15 (766.00) -0.60
Vs	STACK VELOCITY @ STACK CONDITIONS	FPM (m/SEC.)	1,264 (6)	1,282 (7)	1,282 (7)
As	STACK AREA	(SQ.INCHES) (SQ.METERS)	7,815 (5)	7,815 (5)	7,815 (5)
Qs	DRY STACK GAS VOLUME @ STANDARD CONDITIONS* WET STACK GAS VOLUME @ STANDARD CONDITIONS*	DSCFM (DSCM/HR) WSCFH	21,262 (36,124) 1,389,371	21,431 (36,411) 1,409,162	21,473 (36,483) 1,409,144
Qa	ACTUAL STACK GAS VOLUME @ STACK CONDITIONS	ACFM (m^3/HR)	68,617 (116,580)	69,594 (118,240)	69,569 (118,198)
Dn	SAMPLING NOZZLE DIAM.	IN. (m)	0.525 (0.013)	0.525 (0.013)	0.525 (0.013)
%I	PERCENT ISOKINETIC	%	97.8	97.7	97.0

* 68 Deg.F, 29.92 "Hg (20 Deg.C, 760 mm Hg)

SOURCE EMISSION CALCULATIONS

JOB NUMBER: 08-18
JOB NAME: VALERO REFINING - NEW ORLEAN
LOCATION: NORCO, LOUISIANA
UNIT TESTED: THERMAL OXIDIZER NUMBER 2 STACK (EQT 196)

			RUN NUMBER		
SYMBOL	DESCRIPTION	UNITS	1	2	3
Mf	PARTICULATE - PROBE, CYCLONE AND FILTER	mg	2.2	6.8	0.5
Mt	PARTICULATE - TOTAL	mg	----	----	----
Can	PARTICULATE - PROBE, CYCLONE AND FILTER	gr/DSCF*	0.0008	0.0025	0.0002
		(g/DSCM)	(0.0019)	(0.0058)	(0.0004)
Cao	PARTICULATE - TOTAL	gr/DSCF*	----	----	----
		(g/DSCM)	----	----	----
Cat	PARTIC.-PROBE, CYCLONE AND FILTER @ STACK COND.	gr/CF	0.0003	0.0008	0.0001
		(g/m3)	(0.0007)	(0.0018)	(0.0002)
Cau	PARTICULATE - TOTAL @ STACK CONDITIONS	gr/CF	----	----	----
		(g/m3)	----	----	----
Caw	PARTICULATE - PROBE, CYCLONE AND FILTER	LBS/HR	0.15	0.46	0.03
		(Kg/HR)	(0.07)	(0.21)	(0.02)
Cax	PARTICULATE - TOTAL	LBS/HR	----	----	----
		(Kg/HR)	----	----	----

* 68 Deg.F, 29.92 "Hg (20 Deg.C, 760 mm Hg)

APPENDIX C

Calibration Data

Equipment	Calibration Factor	Calibration Date
Pitot Tube #ACP 6	0.801	11/26/07
Probe Tip # 08-18-1	0.525	01/18/08
Dry Gas Meter #30-1	1.014	11/16/07
Stack Unit Orifice #30-1		11/16/07
Digital Temperature Indicator #30-1		11/16/07
Barometer #30-2		10/28/07

PITOT TUBE CALIBRATION

Date: 11-26-07

Pitot No.: ACA #6

Pitot Dimensions: Tip 3/8"

Time: 1540

T_a: 64 °F

C_{pstd}: 0.990

Motor Setting	fps mark	Calibration Standard Start	Calibration Standard End	Standard √Average	High	√High	Cal. Factor	Low	√Low	Cal. Factor
7	20	0.09	0.09	0.300	0.14	0.374	0.794	0.14	0.374	0.794
14	30	0.20	0.20	0.447	0.30	0.548	0.808	0.30	0.548	0.808
20	40	0.35	0.35	0.592	0.53	0.728	0.805	0.53	0.728	0.805
28	50	0.55	0.55	0.742	0.85	0.922	0.796	0.85	0.922	0.796
35	60	0.79	0.79	0.889	1.20	1.095	0.803	1.20	1.095	0.803
41	70	1.10	1.10	1.049	1.70	1.304	0.796	1.70	1.304	0.796
50	80	1.40	1.40	1.183	2.10	1.449	0.808	2.10	1.449	0.808
62	90	1.80	1.80	1.342	2.80	1.673	0.794	2.80	1.673	0.794
28	50	0.55	0.55	0.742	0.85	0.922	0.796	0.85	0.922	0.796
28	50	0.55	0.55	0.742	0.85	0.922	0.796	0.85	0.922	0.796
Average							0.801			0.801

Summary of Results:

Normal high side calibration factor 0.801

variation + 0.87%

variation - 0.87%

Normal low side calibration factor 0.801

variation + 0.87%

variation - 0.87%

Calibrator: Ryan Willis

Checked By: Mike Bass

VERSION 1
22 OCTOBER 2002

METCO ENVIRONMENTAL

NOZZLE CALIBRATION

Nozzle Set No. _____

Date 01/18/08 Calibrator: D.M.

	08-18 — 1	2	3	4	5	6
Reading 1	0.525					
Reading 2	0.524					
Reading 3	0.525					
Reading 4	0.525					
Reading 5	0.525					
Reading 6	0.525					
Reading 7	0.525					
Reading 8	0.524					
Reading 9	0.525					
Reading 10	0.525					
Average	0.525					

	7	8	9	10	11	12
Reading 1						
Reading 2						
Reading 3						
Reading 4						
Reading 5						
Reading 6						
Reading 7						
Reading 8						
Reading 9						
Reading 10						
Average						

METCO ENVIRONMENTAL

Dry Gas Meter Calibration

Dry Gas Meter No.: 30-1

Date: 11-16-07

ΔH ("H_2O)	C_{DG}
0.5	1.022
1.0	1.022
1.5	1.017
2.0	1.014
3.0	1.005
4.0	1.004
Average	1.014 ✓

Variation: + 0.79 ✓

- 0.99 ✓

Calibrator: [signature]

Checked By: [signature]

METCO ENVIRONMENTAL

DRY GAS METER CALIBRATION

Meter Number: 30-1

Date: 11-16-07

Calibrator: [signature]

$$\text{Calibration Factor } (C_{DG}) = \frac{\text{Wet Test Meter } Vm_{std}}{\text{Dry Gas Meter } Vm_{std}}$$

Run No.: 1 @ 0.5

P_b: 30.30 "Hg

Control Module Vacuum: 5.0 "Hg

Wet Test Meter (No. 7)

	Time	Meter Reading	Temp.	P_m
End	834	5.287 cf	65 °F	-1.4 "H_2O
Start	820	0.000 cf	65 °F	-1.4 "H_2O
Avg.	14	5.287 cf	65 °F	-1.4 "H_2O

Dry Gas Meter

	Meter Reading	Temp. In	Temp. Out	P_m
End	184.584 cf	66 °F	73 °F	0.5 "H_2O
Start	179.373 cf	66 °F	72 °F	0.5 "H_2O
Avg.	5.211 cf	69 °F	°F	0.5 "H_2O

$$\text{Wet Test Meter } Vm_{std} = 17.65 \times 5.287 \left[\frac{30.30 + \frac{-1.4}{13.6}}{65 + 460}\right] \times 1.004\ (C_p) = 5.389 \text{ dcsf}$$

$$\text{Dry Gas Meter } Vm_{std} = 17.65 \times 5.211 \left[\frac{30.30 + \frac{0.5}{13.6}}{69 + 460}\right] = 5.274 \text{ dcsf}$$

$$C_{DG} = \frac{5.389}{5.274} = \boxed{1.022}$$

METCO ENVIRONMENTAL

DRY GAS METER CALIBRATION

Meter Number: 30-1

Date: 11-16-07

Calibrator: [signature]

$$\text{Calibration Factor } (C_{DG}) = \frac{\text{Wet Test Meter } Vm_{std}}{\text{Dry Gas Meter } Vm_{std}}$$

Run No.: 1 @ 1.0

P_b: 30.30 "Hg

Control Module Vacuum: 5.0 "Hg

Wet Test Meter (No. 7)

	Time	Meter Reading	Temp.	P_m
End	847	5.361 cf	65 °F	-2.2 "H_2O
Start	837	0.000 cf	65 °F	-2.2 "H_2O
Avg.	10	5.361 cf	65 °F	-2.2 "H_2O

Dry Gas Meter

	Meter Reading	Temp. In	Temp. Out	P_m
End	190.427 cf	75 °F	67 °F	1.0 "H_2O
Start	185.150 cf	72 °F	66 °F	1.0 "H_2O
Avg.	5.277 cf	70 °F		1.0 "H_2O

$$\text{Wet Test Meter } Vm_{std} = 17.65 \times 5.361 \left[\frac{30.30 + \frac{-2.2}{13.6}}{65 + 460}\right] \times 1.004 \ (C_f) = 5.454 \text{ dcsf}$$

$$\text{Dry Gas Meter } Vm_{std} = 17.65 \times 5.277 \left[\frac{30.30 + \frac{1.0}{13.6}}{70 + 460}\right] = 5.338 \text{ dcsf}$$

$$C_{DG} = \frac{5.454}{5.338} = \boxed{1.022}$$

METCO ENVIRONMENTAL

DRY GAS METER CALIBRATION

Meter Number: 30-1

Date: 11-16-07

Calibrator: [signature]

$$\text{Calibration Factor } (C_{DG}) = \frac{\text{Wet Test Meter } Vm_{std}}{\text{Dry Gas Meter } Vm_{std}}$$

Run No.: 1 @ 1.5

P_b: 30.30 "Hg

Control Module Vacuum: 5.0 "Hg

	Wet Test Meter (No. 7)				Dry Gas Meter			
	Time	Meter Reading	Temp.	P_m	Meter Reading	Temp. In	Temp. Out	P_m
End	906	10.523 cf	65 °F	-3.0 "H_2O	201.489 cf	68 °F	78 °F	1.5 "H_2O
Start	850	0.000 cf	65 °F	-3.0 "H_2O	191.073 cf	67 °F	74 °F	1.5 "H_2O
Avg.	16	10.523 cf	65 °F	-3.0 "H_2O	10.416 cf	72 °F		1.5 "H_2O

$$\text{Wet Test Meter } Vm_{std} = 17.65 \times 10.523 \left[\frac{30.30 + \frac{-3.0}{13.6}}{65 + 460}\right] \times 1.004 \quad (C_f) = 10.684 \text{ dcsf}$$

$$\text{Dry Gas Meter } Vm_{std} = 17.65 \times 10.416 \left[\frac{30.30 + \frac{1.5}{13.6}}{72 + 460}\right] = 10.509 \text{ dcsf}$$

$$C_{DG} = \frac{10.684}{10.509} = \boxed{1.017}$$

METCO ENVIRONMENTAL

DRY GAS METER CALIBRATION

Meter Number: 30-1

Date: 11-16-07

Calibrator: [signature]

$$\text{Calibration Factor } (C_{DG}) = \frac{\text{Wet Test Meter } Vm_{std}}{\text{Dry Gas Meter } Vm_{std}}$$

Run No.: 1 @ 2.0

P_b: 30.30 "Hg

Control Module Vacuum: 5.0 "Hg

Wet Test Meter (No. 7)					Dry Gas Meter			
	Time	Meter Reading	Temp.	P_m	Meter Reading	Temp. In	Temp. Out	P_m
End	921	10.451 cf	66 °F	-4.1 "H_2O	212.056 cf	68 °F	81 °F	2.0 "H_2O
Start	907	0.000 cf	66 °F	-4.1 "H_2O	201.706 cf	68 °F	77 °F	2.0 "H_2O
Avg.	14	10.451 cf	66 °F	-4.1 "H_2O	10.350 cf	74 °F		2.0 "H_2O

$$\text{Wet Test Meter } Vm_{std} = 17.65 \times 10.451 \left[\frac{30.30 + \frac{-4.1}{13.6}}{66 + 460}\right] \times 1.004 (C_f) = 10.562 \text{ dcsf}$$

$$\text{Dry Gas Meter } Vm_{std} = 17.65 \times 10.350 \left[\frac{30.30 + \frac{2.0}{13.6}}{74 + 460}\right] = 10.416 \text{ dcsf}$$

$$C_{DG} = \frac{10.562}{10.416} = \boxed{1.014}$$

METCO ENVIRONMENTAL

DRY GAS METER CALIBRATION

Meter Number: 30-1

Date: 11-16-07

Calibrator: [signature]

$$\text{Calibration Factor } (C_{DG}) = \frac{\text{Wet Test Meter } Vm_{std}}{\text{Dry Gas Meter } Vm_{std}}$$

Run No.: 1 @ 3.0

P_b: 30.30 "Hg

Control Module Vacuum: 5.0 "Hg

Wet Test Meter (No. 7)					Dry Gas Meter			
	Time	Meter Reading	Temp.	P_m	Meter Reading	Temp. In	Temp. Out	P_m
End	934	10.884 cf	66 °F	-6.2 "H_2O	223.195 cf	69 °F	84 °F	3.0 "H_2O
Start	923	0.000 cf	66 °F	-6.2 "H_2O	212.383 cf	68 °F	80 °F	3.0 "H_2O
Avg.	11	10.884 cf	66 °F	-6.2 "H_2O	10.812 cf	75 °F		3.0 "H_2O

$$\text{Wet Test Meter } Vm_{std} = 17.65 \times 10.884 \left[\frac{30.30 + \frac{-6.2}{13.6}}{66 + 460} \right] \times 1.004\ (C_f) = 10.943 \text{ dcsf}$$

$$\text{Dry Gas Meter } Vm_{std} = 17.65 \times 10.812 \left[\frac{30.30 + \frac{3.0}{13.6}}{75 + 460} \right] = 10.887 \text{ dcsf}$$

$$C_{DG} = \frac{10.943}{10.887} = \boxed{1.005}$$

METCO ENVIRONMENTAL

DRY GAS METER CALIBRATION

Meter Number: 304

Date: 11-16-07

Calibrator: [signature]

$$\text{Calibration Factor } (C_{DG}) = \frac{\text{Wet Test Meter } Vm_{std}}{\text{Dry Gas Meter } Vm_{std}}$$

Run No.: 1 @ 4.0

P_b: 30.30 "Hg

Control Module Vacuum: 6.0 "Hg

Wet Test Meter (No. 7)					Dry Gas Meter			
	Time	Meter Reading	Temp.	P_m	Meter Reading	Temp. In	Temp. Out	P_m
End	946	10.595 cf	67 °F	-8.2 "H_2O	234.287 cf	71 °F	86 °F	4.0 "H_2O
Start	937	0.000 cf	67 °F	-8.2 "H_2O	223.808 cf	70 °F	81 °F	4.0 "H_2O
Avg.	9	10.595 cf	67 °F	-8.2 "H_2O	10.479 cf	77 °F		4.0 "H_2O

$$\text{Wet Test Meter } Vm_{std} = 17.65 \times 10.595 \left[\frac{30.30 + \frac{-8.2}{13.6}}{67 + 460}\right] \times 1.064\ (C_p) = 10.580 \text{ dcsf}$$

$$\text{Dry Gas Meter } Vm_{std} = 17.65 \times 10.479 \left[\frac{30.30 + \frac{4.0}{13.6}}{77 + 460}\right] = 10.537 \text{ dcsf}$$

$$C_{DG} = \frac{10.580}{10.537} = \boxed{1.064}$$

STACK UNIT ORIFICE NO: 30-1 DATE: 11/16/07 CALIBRATED BY: R Jones CHECKED BY: 0 David Moore

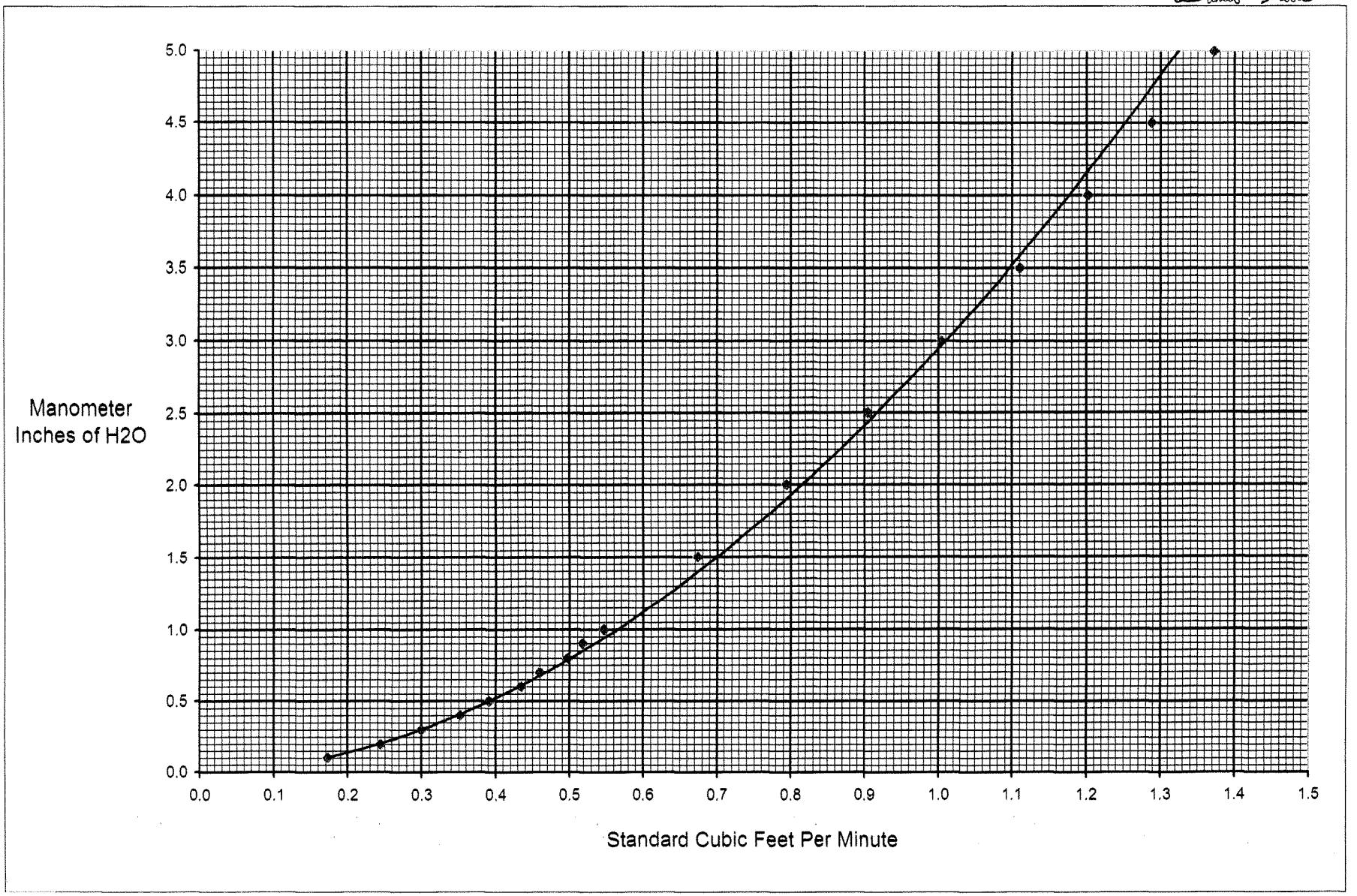

METCO ENVIRONMENTAL

DIGITAL TEMPERATURE INDICATOR NO. 30-1

CALIBRATION DATA

DATE: 11-16-07

Media	Time	Mercury Temperature (°F)	DTI (°F)
Ambient Air	740	64	64
Ice Bath	743	33	33
Boiling Water	756	214	213
Oven 250	829	248	249
Oven 300	837	304	302
Oven 350	853	352	350
Oven 375	906	374	373

Meter Adjusted? YES _____ No ✓

Reference Thermometer No. BR 21

Calibrator [signature]

Checked By: [signature]

METCO ENVIRONMENTAL

✓ by Ryan Jones

BAROMETER CALIBRATION

Barometer No. 30-2

Date: 10/28/07

Time: 1500

Barometric Pressure @ Baton Rouge Airport @ 70 ft.	=	30.31
	-	0.07
Absolute Pressure @ Baton Rouge Airport	=	30.24
	+	0.044
Absolute Pressure @ METCO - Baton Rouge @ 26 ft.	=	30.284
Barometer Reading	=	30.28
Variation	=	0.004
Barometer Adjusted?	Yes ____	No ✓
Barometer Reading (after adjustment)	=	

Signature of Calibrator

RATA CLASS

Scott Specialty Gases

Dual-Analyzed Calibration Standard

9810 BAY AREA BLVD,PASADENA,TX 77507 Phone: 281-474-5800 Fax: 281-474-5857

CERTIFICATE OF ACCURACY: EPA Protocol Gas

Assay Laboratory

SCOTT SPECIALTY GASES
9810 BAY AREA BLVD
PASADENA,TX 77507

P.O. No.: 12041
Project No.: 04-56154-009

Customer

METCO ENVIRONMENTAL

3226 COMMANDER DR
CARROLLTON TX 75006

ANALYTICAL INFORMATION

This certification was performed according to EPA Traceability Protocol For Assay & Certification of Gaseous Calibration Standards; Procedure G-1; September, 1997.

Cylinder Number: ALM000706 **Certification Date:** 03Aug2007 **Exp. Date:** 02Aug2009
Cylinder Pressure*:** 1921 PSIG

COMPONENT	CERTIFIED CONCENTRATION (Moles)		ANALYTICAL ACCURACY**	TRACEABILITY
NITRIC OXIDE	43.4	PPM	+/- 1%	Direct NIST and NMi
NITROGEN - OXYGEN FREE		BALANCE		
TOTAL OXIDES OF NITROGEN	43.4	PPM		Reference Value Only

*** Do not use when cylinder pressure is below 150 psig.

** Analytical accuracy is based on the requirements of EPA Protocol Procedure G1, September 1997.

REFERENCE STANDARD

TYPE/SRM NO.	EXPIRATION DATE	CYLINDER NUMBER	CONCENTRATION	COMPONENT
NTRM 1683	01Nov2010	AAL069905	48.80 PPM	NITRIC OXIDE

INSTRUMENTATION

INSTRUMENT/MODEL/SERIAL#	DATE LAST CALIBRATED	ANALYTICAL PRINCIPLE
FTIR//000929060	25Jul2007	FTIR

ANALYZER READINGS

(Z = Zero Gas R = Reference Gas T = Test Gas r = Correlation Coefficient)

First Triad Analysis

NITRIC OXIDE

Date: 25Jul2007	Response Unit:PPM	
Z1 = -0.00052	R1 = 48.52220	T1 = 43.25494
R2 = 48.77999	Z2 = 0.10809	T2 = 43.34442
Z3 = 0.13074	T3 = 43.50333	R3 = 48.78989
Avg. Concentration:	43.45	PPM

Second Triad Analysis

Date: 03Aug2007	Response Unit: PPM	
Z1 = -0.14468	R1 = 48.47508	T1 = 43.08494
R2 = 48.64468	Z2 = 0.02753	T2 = 43.29241
Z3 = 0.15610	T3 = 43.44362	R3 = 48.80467
Avg. Concentration:	43.41	PPM

Calibration Curve

Concentration = A + Bx + Cx2 + Dx3 + Ex4	
r = 9.99998E-1	
Constants:	A = 0.00000E+0
B = 9.56110E-1	C = 1.51000E-4
D = 0.00000E+0	E = 0.00000E+0

APPROVED BY: _____
TOM NGUYEN

C-14

RATA CLASS

Scott Specialty Gases

Dual-Analyzed Calibration Standard

9810 BAY AREA BLVD,PASADENA,TX 77507 Phone: 281-474-5800 Fax: 281-474-5857

CERTIFICATE OF ACCURACY: EPA Protocol Gas

Assay Laboratory

SCOTT SPECIALTY GASES
9810 BAY AREA BLVD
PASADENA,TX 77507

P.O. No.: 12040
Project No.: 04-56158-005

Customer

METCO ENVIRONMENTAL

3226 COMMANDER DR
CARROLLTON TX 75006

ANALYTICAL INFORMATION

This certification was performed according to EPA Traceability Protocol For Assay & Certification of Gaseous Calibration Standards; Procedure G-1; September, 1997.

Cylinder Number: BLM003539 **Certification Date:** 01Aug2007 **Exp. Date:** 01Aug2009
Cylinder Pressure*:** 1764 PSIG

COMPONENT	CERTIFIED CONCENTRATION (Moles)		ANALYTICAL ACCURACY**	TRACEABILITY
NITRIC OXIDE	92.7	PPM	+/- 1%	Direct NIST and NMi
NITROGEN - OXYGEN FREE		BALANCE		
TOTAL OXIDES OF NITROGEN	93.2	PPM		Reference Value Only

*** Do not use when cylinder pressure is below 150 psig.

** Analytical accuracy is based on the requirements of EPA Protocol Procedure G1, September 1997.

REFERENCE STANDARD

TYPE/SRM NO.	EXPIRATION DATE	CYLINDER NUMBER	CONCENTRATION	COMPONENT
NTRM 1683	01Nov2010	AAL069905	48.80 PPM	NITRIC OXIDE

INSTRUMENTATION

INSTRUMENT/MODEL/SERIAL#	DATE LAST CALIBRATED	ANALYTICAL PRINCIPLE
FTIR//000929060	25Jul2007	FTIR

ANALYZER READINGS

(Z = Zero Gas R = Reference Gas T = Test Gas r = Correlation Coefficient)

First Triad Analysis

NITRIC OXIDE

Date: 24Jul2007	Response Unit:PPM	
Z1 = -0.04574	R1 = 98.48818	T1 = 93.92561
R2 = 98.66957	Z2 = 0.01542	T2 = 93.95740
Z3 = 0.02132	T3 = 94.01192	R3 = 98.95731
Avg. Concentration:	92.99	PPM

Second Triad Analysis

Date: 01Aug2007	Response Unit: PPM	
Z1 = 0.09025	R1 = 48.82988	T1 = 92.36231
R2 = 48.96723	Z2 = 0.09200	T2 = 92.53338
Z3 = 0.14118	T3 = 92.83067	R3 = 48.98990
Avg. Concentration:	92.43	PPM

Calibration Curve

Concentration = A + Bx + Cx2 + Dx3 + Ex4	
r = 9.99998E-1	
Constants:	A = 0.00000E+0
B = 9.56110E-1	C = 1.51000E-4
D = 0.00000E+0	E = 0.00000E+0

Special Notes: FOLIO# 0815

APPROVED BY: _____
RAMIEN JR

C-15

RATA CLASS

Scott Specialty Gases

Dual-Analyzed Calibration Standard

9810 BAY AREA BLVD,PASADENA,TX 77507 Phone: 281-474-5800 Fax: 281-474-5857

CERTIFICATE OF ACCURACY: EPA Protocol Gas

Assay Laboratory

SCOTT SPECIALTY GASES
9810 BAY AREA BLVD
PASADENA,TX 77507

P.O. No.: 11907
Project No.: 04-53521-011

Customer

METCO ENVIRONMENTAL

3226 COMMANDER DR
CARROLLTON TX 75006

ANALYTICAL INFORMATION

This certification was performed according to EPA Traceability Protocol For Assay & Certification of Gaseous Calibration Standards; Procedure G-1; September, 1997.

Cylinder Number: ALM058635 **Certification Date:** 23Apr2007 **Exp. Date:** 22Apr2009
Cylinder Pressure*:** 2010 PSIG

COMPONENT	CERTIFIED CONCENTRATION (Moles)		ANALYTICAL ACCURACY**	TRACEABILITY
SULFUR DIOXIDE *	43.3	PPM	+/- 1%	Direct NIST and NMi
NITROGEN		BALANCE		

*** Do not use when cylinder pressure is below 150 psig.

** Analytical accuracy is based on the requirements of EPA Protocol Procedure G1, September 1997.

* This Protocol has been certified using corrected NIST SO2 standard values, per EPA guidance dated 7/24/96 and will not correlate with uncorrected Prot

REFERENCE STANDARD

TYPE/SRM NO.	EXPIRATION DATE	CYLINDER NUMBER	CONCENTRATION	COMPONENT
NTRM 1693	15Aug2009	ALM040297	50.79 PPM	SULFUR DIOXIDE

INSTRUMENTATION

INSTRUMENT/MODEL/SERIAL#	DATE LAST CALIBRATED	ANALYTICAL PRINCIPLE
FTIR//1602651	18Apr2007	FTIR

ANALYZER READINGS

(Z = Zero Gas R = Reference Gas T = Test Gas r = Correlation Coefficient)

SULFUR DIOXIDE *

First Triad Analysis

Date: 16Apr2007	Response Unit:PPM	
Z1 = 0.00196	R1 = 50.66409	T1 = 43.13402
R2 = 50.66548	Z2 = 0.00286	T2 = 43.36076
Z3 = 0.00766	T3 = 43.43838	R3 = 50.67456
Avg. Concentration:	43.41	PPM

Second Triad Analysis

Date: 23Apr2007	Response Unit: PPM	
Z1 = -0.01722	R1 = 50.65982	T1 = 42.62788
R2 = 50.66662	Z2 = -0.01597	T2 = 43.26024
Z3 = 0.01847	T3 = 43.51340	R3 = 50.69731
Avg. Concentration:	43.23	PPM

Calibration Curve

Concentration = A + Bx + Cx2 + Dx3 + Ex4	
r = 9.99995E-1	
Constants:	A = 0.00000E+0
B = 1.00641E+0	C = -1.34000E-4
D = 0.00000E+0	E = 0.00000E+0

APPROVED BY: _____
Tom Nguyen

C-16

RATA CLASS

Scott Specialty Gases

Dual-Analyzed Calibration Standard

9810 BAY AREA BLVD,PASADENA,TX 77507 Phone: 281-474-5800 Fax: 281-474-5857

CERTIFICATE OF ACCURACY: EPA Protocol Gas

Assay Laboratory

SCOTT SPECIALTY GASES
9810 BAY AREA BLVD
PASADENA,TX 77507

P.O. No.: 11700
Project No.: 04-49129-006

Customer

METCO ENVIRONMENTAL

3226 COMMANDER DR
CARROLLTON TX 75006

ANALYTICAL INFORMATION

This certification was performed according to EPA Traceability Protocol For Assay & Certification of Gaseous Calibration Standards; Procedure G-1; September, 1997.

Cylinder Number: BLM002895 **Certification Date:** 12Dec2006 **Exp. Date:** 11Dec2008

Cylinder Pressure*:** 1981 PSIG

COMPONENT	CERTIFIED CONCENTRATION (Moles)		ANALYTICAL ACCURACY**	TRACEABILITY
SULFUR DIOXIDE *	95.0	PPM	+/- 1%	Direct NIST and NMi
NITROGEN		BALANCE		

*** Do not use when cylinder pressure is below 150 psig.

** Analytical accuracy is based on the requirements of EPA Protocol Procedure G1, September 1997.

* This Protocol has been certified using corrected NIST SO2 standard values, per EPA guidance dated 7/24/96 and will not correlate with uncorrected Prot

REFERENCE STANDARD

TYPE/SRM NO.	EXPIRATION DATE	CYLINDER NUMBER	CONCENTRATION	COMPONENT
NTRM 1694	01Sep2007	ALM015595	98.10 PPM	SULFUR DIOXIDE

INSTRUMENTATION

INSTRUMENT/MODEL/SERIAL#	DATE LAST CALIBRATED	ANALYTICAL PRINCIPLE
FTIR//1602651	27Nov2006	FTIR

ANALYZER READINGS

(Z = Zero Gas R = Reference Gas T = Test Gas r = Correlation Coefficient)

First Triad Analysis

SULFUR DIOXIDE *

Date: 04Dec2006	Response Unit:PPM	
Z1 = -0.00758	R1 = 98.58050	T1 = 95.49370
R2 = 98.67599	Z2 = 0.00982	T2 = 95.66461
Z3 = 0.01730	T3 = 95.81320	R3 = 98.69258
Avg. Concentration:	95.12	PPM

Second Triad Analysis

Date: 12Dec2006	Response Unit: PPM	
Z1 = -0.01470	R1 = 96.93580	T1 = 93.66673
R2 = 96.97744	Z2 = 0.00506	T2 = 93.84222
Z3 = 0.01481	T3 = 94.13450	R3 = 97.54544
Avg. Concentration:	94.80	PPM

Calibration Curve

Concentration = A + Bx + Cx2 + Dx3 + Ex4	
r = 9.99998E-1	
Constants:	A = 0.00000E+0
B = 9.96814E-1	C = -3.00000E-6
D = 0.00000E+0	E = 0.00000E+0

Special Notes: (FOLIO# 1020

APPROVED BY: _____
Lara Nash

C-17

RATA CLASS

Scott Specialty Gases

Dual-Analyzed Calibration Standard

9810 BAY AREA BLVD,PASADENA,TX 77507 Phone: 281-474-5800 Fax: 281-474-5857

CERTIFICATE OF ACCURACY: EPA Protocol Gas

Assay Laboratory

SCOTT SPECIALTY GASES
9810 BAY AREA BLVD
PASADENA,TX 77507

P.O. No.: 11849
Project No.: 04-52372-001

Customer

METCO ENVIRONMENTAL

3226 COMMANDER DR
CARROLLTON TX 75006

ANALYTICAL INFORMATION

This certification was performed according to EPA Traceability Protocol For Assay & Certification of Gaseous Calibration Standards; Procedure G-1; September, 1997.

Cylinder Number: ALM046180 **Certification Date:** 12Mar2007 **Exp. Date:** 11Mar2010
Cylinder Pressure*:** 1870 PSIG

COMPONENT	CERTIFIED CONCENTRATION (Moles)		ANALYTICAL ACCURACY**	TRACEABILITY
CARBON MONOXIDE	42.7	PPM	+/- 1%	Direct NIST and NMi
NITROGEN		BALANCE		

*** Do not use when cylinder pressure is below 150 psig.

** Analytical accuracy is based on the requirements of EPA Protocol Procedure G1, September 1997.

REFERENCE STANDARD

TYPE/SRM NO.	EXPIRATION DATE	CYLINDER NUMBER	CONCENTRATION	COMPONENT
NTRM 1678	15Aug2009	ALM044707	51.13 PPM	CARBON MONOXIDE

INSTRUMENTATION

INSTRUMENT/MODEL/SERIAL#	DATE LAST CALIBRATED	ANALYTICAL PRINCIPLE
FTIR//1602651	28Feb2007	FTIR

ANALYZER READINGS

(Z = Zero Gas R = Reference Gas T = Test Gas r = Correlation Coefficient)

CARBON MONOXIDE

First Triad Analysis

Date: 05Mar2007	Response Unit:PPM	
Z1 = -0.01498	R1 = 51.32029	T1 = 42.90422
R2 = 51.36195	Z2 = 0.01749	T2 = 42.92026
Z3 = 0.03872	T3 = 42.92793	R3 = 51.40525
Avg. Concentration:	42.72	PPM

Second Triad Analysis

Date: 12Mar2007	Response Unit: PPM	
Z1 = -0.01883	R1 = 51.13753	T1 = 42.64520
R2 = 51.14538	Z2 = -0.00378	T2 = 42.71890
Z3 = 0.01789	T3 = 42.73012	R3 = 51.18839
Avg. Concentration:	42.67	PPM

Calibration Curve

Concentration = A + Bx + Cx2 + Dx3 + Ex4	
r = 1.00000E+0	
Constants:	A = 0.00000E+0
B = 9.76835E-1	C = 5.25000E-4
D = 2.00000E-6	E = 0.00000E+0

APPROVED BY: LaVail Washington

SUPERVISOR: TOM NGUYEN

RATA CLASS

Scott Specialty Gases

Dual-Analyzed Calibration Standard

9810 BAY AREA BLVD,PASADENA,TX 77507 Phone: 281-474-5800 Fax: 281-474-5857

CERTIFICATE OF ACCURACY: EPA Protocol Gas

Assay Laboratory

SCOTT SPECIALTY GASES
9810 BAY AREA BLVD
PASADENA,TX 77507

P.O. No.: 11150
Project No.: 04-35621-003

Customer

METCO ENVIRONMENTAL
ROBERT PEEL
3226 COMMANDER DR
CARROLLTON TX 75006

ANALYTICAL INFORMATION

This certification was performed according to EPA Traceability Protocol For Assay & Certification of Gaseous Calibration Standards; Procedure G-1; September, 1997.

Cylinder Number: AAL9563 **Certification Date:** 09Jun2005 **Exp. Date:** 01Jul2008
Cylinder Pressure*:** 1976 PSIG

COMPONENT	CERTIFIED CONCENTRATION (Moles)		ANALYTICAL ACCURACY**	TRACEABILITY
CARBON MONOXIDE	84.3	PPM	+/- 1%	Direct NIST and NMi
NITROGEN		BALANCE		

*** Do not use when cylinder pressure is below 150 psig.

** Analytical accuracy is based on the requirements of EPA Protocol Procedure G1, September 1997.

REFERENCE STANDARD

TYPE/SRM NO.	EXPIRATION DATE	CYLINDER NUMBER	CONCENTRATION	COMPONENT
NTRM 1679	02Apr2007	ALM015479	94.90 PPM	CARBON MONOXIDE

INSTRUMENTATION

INSTRUMENT/MODEL/SERIAL#	DATE LAST CALIBRATED	ANALYTICAL PRINCIPLE
MKS Online/2030/0929061	19May2005	FTIR

ANALYZER READINGS

(Z = Zero Gas R = Reference Gas T = Test Gas r = Correlation Coefficient)

First Triad Analysis

CARBON MONOXIDE

Date: 02Jun2005	Response Unit:PPM	
Z1 = -0.01148	R1 = 94.57844	T1 = 84.09110
R2 = 94.59449	Z2 = 0.04254	T2 = 84.09810
Z3 = 0.07395	T3 = 84.13997	R3 = 94.59566
Avg. Concentration:	84.38	PPM

Second Triad Analysis

Date: 09Jun2005	Response Unit: PPM	
Z1 = -0.00590	R1 = 95.02817	T1 = 84.35381
R2 = 95.12179	Z2 = 0.01282	T2 = 84.42815
Z3 = 0.01511	T3 = 84.43095	R3 = 95.13376
Avg. Concentration:	84.23	PPM

Calibration Curve

Concentration = A + Bx + Cx2 + Dx3 + Ex4	
r = 9.99983E-1	
Constants:	A = 0.00000E+0
B = 9.13684E-1	C = 5.51000E-4
D = 1.00000E-6	E = 0.00000E+0

APPROVED BY: William R. Morgan
William Morgan

RATA CLASS

Scott Specialty Gases

Dual-Analyzed Calibration Standard

9810 BAY AREA BLVD,PASADENA,TX 77507 Phone: 281-474-5800 Fax: 281-474-5857

CERTIFICATE OF ACCURACY: EPA Protocol Gas

Assay Laboratory

SCOTT SPECIALTY GASES
9810 BAY AREA BLVD
PASADENA,TX 77507

P.O. No.: 11708
Project No.: 04-49694-004

Customer

METCO ENVIRONMENTAL

3226 COMMANDER DR
CARROLLTON TX 75006

ANALYTICAL INFORMATION

This certification was performed according to EPA Traceability Protocol For Assay & Certification of Gaseous Calibration Standards; Procedure G-1; September, 1997.

Cylinder Number: BAL837 **Certification Date:** 22Nov2006 **Exp. Date:** 21Nov2009
Cylinder Pressure*:** 940 PSIG

COMPONENT	CERTIFIED CONCENTRATION (Moles)		ANALYTICAL ACCURACY**	TRACEABILITY
PROPANE	30.0	PPM	+/- 1%	Direct NIST and NMi
NITROGEN		BALANCE		

*** Do not use when cylinder pressure is below 150 psig.

** Analytical accuracy is based on the requirements of EPA Protocol Procedure G1, September 1997.

REFERENCE STANDARD

TYPE/SRM NO.	EXPIRATION DATE	CYLINDER NUMBER	CONCENTRATION	COMPONENT
NTRM 1668	04Jul2008	ALM043134	98.80 PPM	PROPANE

INSTRUMENTATION

INSTRUMENT/MODEL/SERIAL#	DATE LAST CALIBRATED	ANALYTICAL PRINCIPLE
HP-Y/HP 6890/US00000974	24Oct2006	GAS CHROMATOGRAPHY

ANALYZER READINGS

(Z = Zero Gas R = Reference Gas T = Test Gas r = Correlation Coefficient)

PROPANE

First Triad Analysis

Date: 17Nov2003	Response Unit:AREA	
Z1 = 0.00000	R1 = 4059935.	T1 = 1219960.
R2 = 4054715.	Z2 = 0.00000	T2 = 1217780.
Z3 = 0.00000	T3 = 1218883.	R3 = 4050885.
Avg. Concentration:	29.97	PPM

Second Triad Analysis

Date: 22Nov2006	Response Unit: AREA	
Z1 = 61701.00	R1 = 624903.2	T1 = 190363.7
R2 = 623268.0	Z2 = 60957.00	T2 = 190905.7
Z3 = 60601.50	T3 = 190009.5	R3 = 622977.7
Avg. Concentration:	30.02	PPM

Calibration Curve

Concentration = A + Bx + Cx2 + Dx3 + Ex4	
r = .999992	
Constants:	A = -.196
B = .000162	C =
D =	E =

APPROVED BY: RAMIEN ROUHANI

SUPERVISOR: SUSAN BRANDON

RATA CLASS

Scott Specialty Gases

Dual-Analyzed Calibration Standard

9810 BAY AREA BLVD,PASADENA,TX 77507 Phone: 281-474-5800 Fax: 281-474-5857

CERTIFICATE OF ACCURACY: EPA Protocol Gas

Assay Laboratory

SCOTT SPECIALTY GASES
9810 BAY AREA BLVD
PASADENA,TX 77507

P.O. No.: 11150
Project No.: 04-35621-010

Customer

METCO ENVIRONMENTAL
ROBERT PEEL
3226 COMMANDER DR
CARROLLTON TX 75006

ANALYTICAL INFORMATION

This certification was performed according to EPA Traceability Protocol For Assay & Certification of Gaseous Calibration Standards; Procedure G-1; September, 1997.

Cylinder Number: ALM054530 **Certification Date:** 16Jun2005 **Exp. Date:** 15Jun2008
Cylinder Pressure*:** 2000 PSIG

COMPONENT	CERTIFIED CONCENTRATION (Moles)		ANALYTICAL ACCURACY**	TRACEABILITY
PROPANE	47.8	PPM	+/- 1%	Direct NIST and NMi
NITROGEN		BALANCE		

*** Do not use when cylinder pressure is below 150 psig.

** Analytical accuracy is based on the requirements of EPA Protocol Procedure G1, September 1997.

REFERENCE STANDARD

TYPE/SRM NO.	EXPIRATION DATE	CYLINDER NUMBER	CONCENTRATION	COMPONENT
NTRM 1667	04Jul2008	ALM028376	49.80 PPM	PROPANE

INSTRUMENTATION

INSTRUMENT/MODEL/SERIAL#	DATE LAST CALIBRATED	ANALYTICAL PRINCIPLE
HP-Y/HP 6890/US00000974	08Jun2005	GAS CHROMATOGRAPHY

ANALYZER READINGS

(Z = Zero Gas R = Reference Gas T = Test Gas r = Correlation Coefficient)

First Triad Analysis

PROPANE

Date: 16Jun2005

Z1 = 143895.0	R1 = 758195.0	T1 = 723928.0
R2 = 757788.0	Z2 = 144094.0	T2 = 726848.0
Z3 = 145063.0	T3 = 727307.0	R3 = 759996.0

Avg. Concentration: 47.79 PPM

Second Triad Analysis

Calibration Curve

Concentration = A + Bx + Cx2 + Dx3 + Ex4
r = 0.999994

Constants:	A = 0.0110806
B = 6.54E-05	C =
D =	E =

APPROVED BY: LEROY JONES

RATA CLASS

Scott Specialty Gases

Dual-Analyzed Calibration Standard

9810 BAY AREA BLVD,PASADENA,TX 77507 Phone: 281-474-5800 Fax: 281-474-5857

CERTIFICATE OF ACCURACY: EPA Protocol Gas

Assay Laboratory

SCOTT SPECIALTY GASES
9810 BAY AREA BLVD
PASADENA,TX 77507

P.O. No.: 11449
Project No.: 04-43774-004

Customer

METCO ENVIRONMENTAL

3226 COMMANDER DR
CARROLLTON TX 75006

ANALYTICAL INFORMATION

This certification was performed according to EPA Traceability Protocol For Assay & Certification of Gaseous Calibration Standards; Procedure G-1; September, 1997.

Cylinder Number: BLM000800 **Certification Date:** 10Apr2006 **Exp. Date:** 10Apr2009
Cylinder Pressure*:** 1490 PSIG **Prev Certification Date:** 15Mar2003

COMPONENT	CERTIFIED CONCENTRATION (Moles)		ANALYTICAL ACCURACY**	TRACEABILITY
PROPANE	85.7	PPM	+/- 1%	Direct NIST and NMi
NITROGEN		BALANCE		

*** Do not use when cylinder pressure is below 150 psig.

** Analytical accuracy is based on the requirements of EPA Protocol Procedure G1, September 1997.

REFERENCE STANDARD

TYPE/SRM NO.	EXPIRATION DATE	CYLINDER NUMBER	CONCENTRATION	COMPONENT
NTRM 1667	04Jul2008	ALM028376	49.80 PPM	PROPANE

INSTRUMENTATION

INSTRUMENT/MODEL/SERIAL#	DATE LAST CALIBRATED	ANALYTICAL PRINCIPLE
HP-Y/HP 6890/US00000974	10Apr2006	GAS CHROMATOGRAPHY

ANALYZER READINGS

(Z=Zero Gas R=Reference Gas T=Test Gas r=Correlation Coefficient)

First Triad Analysis

PROPANE

Date: 15Mar2003	Response Unit:AREA	
Z1=7242.000	R1=2403636.	T1=4132655.
R2=2404911.	Z2=6568.000	T2=4132789.
Z3=7525.000	T3=4100563.	R3=2395306.
Avg. Concentration:	85.40	PPM

Second Triad Analysis

Date: 10Apr2006	Response Unit: AREA	
Z1=143489.0	R1=752386.0	T1=1289462.
R2=749935.0	Z2=144127.0	T2=1288669.
Z3=143508.0	T3=1288090.	R3=751833.0
Avg. Concentration:	86.00	PPM

Calibration Curve

Concentration=A+Bx+Cx2+Dx3+Ex4	
r=0.999994	
Constants:	A=-5.95E-02
B=6.60E-05	C=
D=	E=

APPROVED BY: L. JONES

SUPERVISOR: S. BRANDON

RATA CLASS

Scott Specialty Gases

Dual-Analyzed Calibration Standard

9810 BAY AREA BLVD,PASADENA,TX 77507 Phone: 281-474-5800 Fax: 281-474-5857

CERTIFICATE OF ACCURACY: EPA Protocol Gas

Assay Laboratory

SCOTT SPECIALTY GASES
9810 BAY AREA BLVD
PASADENA,TX 77507

P.O. No.: 2215792
Project No.: 04-59222-003

Customer

METCO ENVIRONMENTAL
DEKE BRUMMETT
3226 COMMANDER DR
CARROLLTON TX 75006

ANALYTICAL INFORMATION

This certification was performed according to EPA Traceability Protocol For Assay & Certification of Gaseous Calibration Standards; Procedure G-1; September, 1997.

Cylinder Number: ALM043295 **Certification Date:** 15Nov2007 **Exp. Date:** 15Nov2010
Cylinder Pressure*:** 2000 PSIG

COMPONENT	CERTIFIED CONCENTRATION (Moles)		ANALYTICAL ACCURACY**	TRACEABILITY
CARBON DIOXIDE	12.1	%	+/- 1%	Direct NIST and NMi
OXYGEN	11.9	%	+/- 1%	Direct NIST and NMi
NITROGEN		BALANCE		

*** Do not use when cylinder pressure is below 150 psig.

** Analytical accuracy is based on the requirements of EPA Protocol Procedure G1, September 1997.

REFERENCE STANDARD

TYPE/SRM NO.	EXPIRATION DATE	CYLINDER NUMBER	CONCENTRATION	COMPONENT
NTRM 1675	04Jul2008	K001494	13.93 %	CARBON DIOXIDE
NTRM 2350	01May2009	K003567	23.48 %	OXYGEN

INSTRUMENTATION

INSTRUMENT/MODEL/SERIAL#	DATE LAST CALIBRATED	ANALYTICAL PRINCIPLE
MTIA/M200/171109	23Oct2007	GAS CHROMATOGRAPHY
SERVOMEX/MODEL 244A/701/716	24Oct2007	PARAMAGNETIC

ANALYZER READINGS

(Z=Zero Gas R=Reference Gas T=Test Gas r=Correlation Coefficient)

CARBON DIOXIDE

First Triad Analysis			Second Triad Analysis	Calibration Curve	
Date: 14Nov2007	Response Unit:AREA			Concentration=A+Bx+Cx2+Dx3+Ex4	
Z1=2.67000	R1=1060271.	T1=920216.0		r=0.9999949	
R2=1065959.	Z2=258.0000	T2=620101.0		Constants:	A=-0.028788
Z3=214.0000	T3=920048.0	R3=1065889.		B=.0000131805	C=
Avg. Concentration:	12.07			D=	E=

OXYGEN

First Triad Analysis			Second Triad Analysis	Calibration Curve	
Date: 15Nov2007	Response Unit:VOLTS			Concentration=A+Bx+Cx2+Dx3+Ex4	
Z1=0.00000	R1=0.98520	T1=0.49840		r=0.9999998	
R2=0.98520	Z2=0.00040	T2=0.49850		Constants:	A=.003347709
Z3=0.00050	T3=0.49850	R3=0.98510		B=23.82226956	C=
Avg. Concentration:	11.87 %			D=	E=

APPROVED BY: DAVID KELLY

Scott Specialty Gases
Shipped 9810 BAY AREA BLVD
From: PASADENA TX 77507
Phone: 281-474-5800 Fax: 281-474-5857

CERTIFICATE OF ANALYSIS

SCOTT C/O METCO CONSIGNMENT

3226 COMMANDER DRIVE

CARROLLTON TX 75006

PROJECT #: 04-48816-002
PO#: REPL 48814
ITEM #: 0401022 AL
DATE: 20Oct2006

CYLINDER #: ALM052022
FILL PRESSURE: 02000 PSIG

PURE MATERIAL: AIR CAS# 132259-10-0

GRADE: HYDROCARBONFREE

PURITY: -

IMPURITY	MAXIMUM CONCENTRATIONS
O2	20 TO 21%
CO	0.5 PPM
CO2	1 PPM
H2O	5 PPM
THC(CH4)	0.1 PPM

Nora Pike

APPENDIX D

Field Testing Data

METCO ENVIRONMENTAL

Job Number: 08-18
Job Name: Valero
Run Number: 1
Unit: Thermal Oxidizer #2
Date: 1-18-08
Operator: Williams / Nehring / Moore
Sample box No. 30-1 Meter Box No. 30-1

pm Field Data

Read and record at the start of each test point.

Purge to: –
Purge time: –
Pitot Leak Check Initial ✓ Final ✓ ✓

Ambient Temp. °F 57
Assumed Moisture % 9
Probe Length ACP
C Factor 0.048 → 1.10 to reference.
Initial Leak @ 15.0 "Hg = 0.000 cfm
Final Leak @ 5.0 "Hg = 0.000 cfm

Point	Clock Time	Dry Gas Meter, CF	ΔP_s "Pitot" "H_2O	Orifice ΔH "H_2O Desired	P_m Orifice ΔH "H_2O Actual	Pump Vacuum "Hg Gauge	T_s Stack Temp °F	Probe Temp °F	Oven Temp °F	Effluent Temp °F	T_m Dry Gas Temp °F Inlet	Dry Gas Temp °F Outlet	Remarks
A 6	1033	789.233	0.040	1.40	1.40	3.0	1124	240	248	57	69	71	
5	1036	791.19	0.040	1.40	1.40	3.0	1120	250	255	55	69	71	
4	1039	792.91	0.050	1.15	1.15	3.0	1123	242	257	55	69	72	
3	1042	794.73	0.045	1.05	1.05	3.0	1121	240	245	56	70	72	
2	1045	796.24	0.045	1.05	1.05	3.0	1118	242	245	56	69	75	
1	1048	797.85	0.040	0.92	0.92	2.50	1119	241	246	57	69	74	
END	1051	799.398	–	–	–	–	–	–	–	–	–	–	
B 6	1058	799.398	0.040	1.40	1.40	3.0	1127	245	241	67	70	74	
5	1101	801.17	0.040	1.40	1.40	3.0	1124	240	245	59	70	75	
4	1104	803.09	0.055	1.25	1.25	3.0	1122	243	252	58	70	77	
3	1107	804.97	0.050	1.15	1.15	3.0	1124	250	253	59	71	78	
2	1109	806.01	0.040	0.92	0.92	2.5	1121	250	255	60	71	80	
1	1112	807.58	0.040	0.92	0.92	2.5	1119	248	255	60	71	80	
END	1115	809.058	–	–	–	–	–	–	–	–	–	–	
C 6	1123	809.058	0.040	1.40	1.40	3.0	1124	250	254	48	71	77	
5	1126	810.94	0.040	1.40	1.40	3.0	1121	248	246	62	71	78	
4	1129	812.87	0.055	1.25	1.25	3.0	1123	249	250	60	72	79	
3	1132	814.65	0.045	1.05	1.05	3.0	1121	250	249	61	72	81	

Pitot Tube Calibration Factor C_p 0.801
Volume Collected V_m 41.280 ft^3
Water Collected V_w 78.0 ml
Time of Test T_t 72 min.
Stack Pressure P_s –0.60 "H_2O

Pitot Tube No. ACP #4
Baro. Press. P_b 30.19 "Hg
Probe Tip Dia. D_n 0.525 in.
% CO_2 3.4 % CO 0.0
% O_2 7.4 % N_2 88.8
Area Stack A_s 7.815 in^2

Barometer No. 30-2 Probe Tip No. 08-18-1
Total Volume of Leak Checks After Start: – ft^3
V_m = Dry Gas Meter Calibration Factor 1.014 X 40.710

{Dry Gas Meter Reading – ft^3 – (T_t – min. X Leak Rate – cfm)}

VERSION 2
15 MARCH 2006

Impinger Box No. 30-1

Impinger 1	Final Weight	807.7	Balance QA ____	Impinger 1	48.4
	Initial Weight	759.3		Impinger 2	14.8
	Increase			Impinger 3	4.8
Impinger 2	Final Weight	794.0		Impinger 4	8.0
	Initial Weight	777.2			
	Increase		V_w =	Impinger 5	
Impinger 3	Final Weight	634.3	g SO_2 = -	Impinger 6	
	Initial Weight	631.5	V_w =		
	Increase			Impinger 7	
Impinger 4	Final Weight	976.1		Total	78.0 = V_w
	Initial Weight	968.1			
	Increase				

Water Weight Gain

Impinger 5	Final Weight		P_b = 30.19	$\%CO_2$ = 3.4	
	Initial Weight		V_m = 41.280	$\%O_2$ = 7.4	
	Increase		V_w = 78.0	%CO = ND	
			P_m = 1.181	$\%N_2$ = 88.8	
Impinger 6	Final Weight		Avg ΔP = 0.051	A_s = 7815	
	Initial Weight			D_n = 0.525	
	Increase		Avg$\sqrt{\Delta P}$ = ~~0.226~~ 0.220	T_t = 72	
			C_p = 0.801		
Impinger 7	Final Weight		P_s = -0.60 "H_2O	~~30.17~~ 30.10 "Hg	
	Initial Weight		T_m = 74 °F	534 °R	
	Increase		T_s = 1122 °F	1582 °R	

Moisture Content: %M = 8.18 M_d = 0.9182 MW_d = 28.88 MW = 27.99

$$Vm_{std} = 17.65\ Vm \left[\frac{P_b + \frac{P_m}{13.6}}{T_m + 460}\right] = 17.65 \times 41.280 \left[\frac{30.19 + \frac{1.181}{13.6}}{74 + 460}\right] = \frac{41.310\ \text{sft}^3}{0.574\ \text{scfm}}$$

Vw_{gas} = 0.0472 x Vw = 0.0472 x 78.0 = 3.682 sft^3

% Moisture = $\frac{Vw_{gas}}{Vm_{std} + Vw_{gas}}$ x 100 = $\frac{3.682}{41.310 + 3.682}$ x 100 = 8.18 %

V_s = 5123.8 x 0.801 $\sqrt{\frac{1582}{\frac{30.17}{30.10} \times 27.99}}$ x $\frac{0.226}{0.220}$ = ~~1270~~ 1,264 fpm

ACFM: ~~68,849~~ 68,617

SCFM: ~~21,377~~ 21,262

%I = $\frac{1{,}039 \times 41.310 \times 1582}{72 \times \frac{30.17}{30.10} \times 0.9882 \times \frac{1270}{1{,}264} \times (0.525)^2}$ = ~~47.3~~ 97.8 %

%EA: 47.7

VERSION 2
15 MARCH 2006

Run Number 1 Pm FIELD DATA

Unit Thermal oxidizer #2

Date 1-18-08

Point	Clock Time	Dry Gas Meter, CF	ΔP_s "Pitot" "H_2O	Orifice ΔH "H_2O Desired	P_m Orifice ΔH "H_2O Actual	Pump Vacuum "Hg Gauge	T_s Stack Temp °F	Probe Temp °F	Oven Temp °F	Effluent Temp °F	T_m Dry Gas Temp °F Inlet	Dry Gas Temp °F Outlet	Remarks
C 2	1135	816.31	0.040	0.92	0.92	2.5	1122	249	250	41	72	82	
1	1138	817.84	0.050	1.15	1.15	3.0	1118	245	252	42	72	83	
END	1142	819.485	—	—	—	—	—	—	—	—	—	—	
D 6	1148	819.485	0.055	1.25	1.25	3.0	1123	248	254	47	72	80	
5	1151	821.24	0.060	1.40	1.40	3.0	1124	250	252	43	72	80	
4	1154	823.13	0.055	1.25	1.25	3.0	1124	253	255	43	73	81	
3	1157	824.94	0.045	1.05	1.05	3.0	1122	253	255	43	73	82	
2	1200	824.45	0.045	1.05	1.05	3.0	1123	250	254	44	73	83	
1	1203	828.18	0.050	1.15	1.15	3.0	1120	750	254	44	73	83	
END	1206	829.943	—	—	—	—	—	—	—	—	—	—	

METCO ENVIRONMENTAL

Job Number 08-18
Job Name Valero
Run Number 2
Unit Thermal Oxidizer #2
Date 1-18-08
Operator Williams / Nehring / Moore
Sample box No. 30-2 Meter Box No. 30-1

Pm Field Data

Read and record at the start of each test point.

Purge to: –
Purge time: –
Pitot Leak Check Initial ✓ Final ✓

Ambient Temp. °F 45
Assumed Moisture % 9
Probe Length ACP
C Factor 0.048-1.10 to reference.
Initial Leak @ 15.0 "Hg = 0.010 cfm
Final Leak @ 5.0 "Hg = 0.010 cfm

Point	Clock Time	Dry Gas Meter, CF	ΔP_s "Pitot" "H_2O	Orifice ΔH "H_2O Desired	P_m Orifice ΔH "H_2O Actual	Pump Vacuum "Hg Gauge	T_s Stack Temp °F	Probe Temp °F	Oven Temp °F	Effluent Temp °F	T_m Dry Gas Temp °F Inlet	Dry Gas Temp °F Outlet	Remarks
D6	1257	831.452	0.040	1.40	1.40	3.0	1126	250	240	48	73	75	Filter - 882 X 53
5	1300	833.54	0.040	1.40	1.40	3.0	1123	252	255	63	73	75	
4	1303	835.30	0.055	1.25	1.25	3.0	1124	252	240	58	74	78	
3	1306	837.28	0.055	1.25	1.25	3.0	1124	250	252	57	74	80	
2	1309	839.09	0.045	1.05	1.05	2.5	1120	251	255	58	74	81	
1	1312	840.40	0.045	1.05	1.05	2.5	1118	254	250	58	74	82	
End	1315	842.071	–	–	–	–	–	–	–	–	–	–	
U6	1322	842.071	0.040	1.40	1.40	3.0	1124	260	248	48	74	80	
5	1325	843.93	0.040	1.40	1.40	3.0	1122	257	241	58	74	81	
4	1328	845.84	0.050	1.15	1.15	3.0	1123	254	247	57	74	83	
3	1331	847.58	0.050	1.15	1.15	3.0	1121	254	247	59	74	83	
2	1334	849.37	0.040	0.92	0.92	2.50	1120	250	245	58	75	84	
1	1337	850.82	0.040	0.92	0.92	2.50	1121	252	245	58	75	84	
END	1340	852.274	–	–	–	–	–	–	–	–	–	–	
D6	1349	852.274	0.040	1.40	1.40	3.0	1125	250	248	48	75	80	
5	1352	854.18	0.040	1.40	1.40	3.0	1121	251	248	57	75	81	
4	1355	855.95	0.055	1.25	1.25	3.0	1123	247	256	55	75	83	
3	1358	857.75	0.050	1.15	1.15	3.0	1122	248	251	54	75	83	

Pitot Tube Calibration Factor C_p 0.80
Volume Collected V_m 41.898 ft^3
Water Collected V_w 84.6 ml
Time of Test T_t 72 min.
Stack Pressure P_s -0.40 "H_2O

Pitot Tube No. ACP#4
Baro. Press. P_b 30.19 "Hg
Probe Tip Dia. D_n 0.525 in.
% CO_2 3.7 % CO 0.0
% O_2 7.5 % N_2 88.8
Area Stack A_s 7,815 in^2

Barometer No. 30-2 Probe Tip No. 08-18-1
Total Volume of Leak Checks After Start: – ft^3
V_m = Dry Gas Meter Calibration Factor 1.014 X 41.32

{Dry Gas Meter Reading – ft^3 – (T_t – min. X Leak Rate – cfm)}

VERSION 2
15 MARCH 2006

Impinger Box No. 30-2

Impinger 1	Final Weight	820.7	Balance QA ✓	Impinger 1	96.7 ✓
	Initial Weight	724.0		Impinger 2	-23.2 ✓ ~~16.0~~
	Increase				
Impinger 2	Final Weight	736.5 ~~773.9~~ DM		Impinger 3	2.5 ✓
	Initial Weight	759.7			
	Increase			Impinger 4	8.6 ✓
Impinger 3	Final Weight	637.9	V_w = g SO_2 = - V_w =	Impinger 5	
	Initial Weight	635.4			
	Increase			Impinger 6	
Impinger 4	Final Weight	978.0		Impinger 7	
	Initial Weight	969.4			
	Increase			Total	84.6 ✓ = V_w
Impinger 5	Final Weight		P_b = 30.19 ✓	$\%CO_2$ = 3.7 ✓	
	Initial Weight		V_m = 41.898 ✓	$\%O_2$ = 7.5 ✓	
	Increase		V_w = 84.6 ✓	%CO = 0.0 ✓	
			P_m = 1.205 ✓	$\%N_2$ = 88.8 ✓	
Impinger 6	Final Weight		Avg ΔP = ~~0.053~~ 0.052 ✓	A_s = 7815 ✓	
	Initial Weight			D_n = 0.525 ✓	
	Increase		Avg$\sqrt{\Delta P}$ = 0.228	T_t = 72 ✓	
			C_p = 0.801 ✓		
Impinger 7	Final Weight		P_s = -0.60 ✓ "H_2O	30.15 ✓ "Hg	
	Initial Weight		T_m = 78 ✓ °F	538 ✓ °R	
	Increase		T_s = 1122 ✓ °F	1582 ✓ °R	

Moisture Content: %M = 8.75 ✓ M_d = 0.9125 ✓ MW_d = 28.892 ✓ MW = 27.94 ✓

$$Vm_{std} = 17.65\ Vm \left[\frac{P_b + \frac{P_m}{13.6}}{T_m + 460}\right] = 17.65 \times 41.898 \left[\frac{30.19 + \frac{1.205}{13.6}}{78 + 460}\right] = \frac{41.619}{0.578}\ \frac{sft^3}{scfm}$$

Vw_{gas} = 0.0472 x Vw = 0.0472 x 84.6 ✓ = 3.993 ✓ sft^3

% Moisture = $\frac{Vw_{gas}}{Vm_{std} + Vw_{gas}}$ x 100 = $\frac{3.993}{41.619 + 3.993}$ x 100 = 8.75 ✓ %

V_s = 5123.8 x 0.801 ✓ $\sqrt{\frac{1582}{30.15 \times 27.94}}$ ✓ x 0.228 = 1282 ✓ fpm

ACFM: 69594

SCFM: 21,431 ✓

%I = $\frac{1{,}039 \times 41.619 \times 1582}{0.9125 \times 30.15 \times 1282 \times 72 \times (0.525)^2}$ = 97.7 ✓ %

%EA: 46.8 ✓

VERSION 2
15 MARCH 2006

Run Number 2

Unit Thermal Oxidizer #2

Date 1-18-08

Am

FIELD DATA

Point	Clock Time	Dry Gas Meter, CF	ΔP_s "Pitot" "H_2O	Orifice ΔH "H_2O Desired	P_m Orifice ΔH "H_2O Actual	Pump Vacuum "Hg Gauge	T_s Stack Temp °F	Probe Temp °F	Oven Temp °F	Effluent Temp °F	T_m Dry Gas Temp °F Inlet	Dry Gas Temp °F Outlet	Remarks
B 2	1401	859.53	0.050	1.15	1.15	3.0	1120	248	250	57	75	84	
1	1404	861.15	0.050	1.05	1.05	2.5	1120	248	249	58	75	85	0.50 ΔP
END	1407	862.788	–	–	–	–	–	–	–	–	–	–	
A 4	1414	862.788	0.040	1.40	1.40	3.0	1125	240	245	48	75	81	
5	1417	864.45	0.040	1.40	1.40	3.0	1122	246	245	58	75	83	
4	1420	866.48	0.050	1.15	1.15	3.0	1122	245	246	55	75	84	
3	1423	868.24	0.050	1.15	1.15	3.0	1120	245	250	56	75	84	
2	1426	869.92	0.045	1.05	1.05	3.0	1121	245	251	56	75	85	
1	1429	871.43	0.040	0.92	0.92	2.5	1119	246	251	57	75	85	
END	1432	872.972	–	–	–	–	–	–	–	–	–	–	

Version 1
22 OCTOBER 2002

METCO ENVIRONMENTAL

Job Number: 08-18
Job Name: Valero
Run Number: 3
Unit: Thermal Oxidizer #2
Date: 1-18-08
Operator: Williams / Nehring / Moore
Sample box No. 30-1 Meter Box No. 30-1

Pm Field Data

Read and record at the start of each test point.

Purge to: –
Purge time: –
Pitot Leak Check Initial ✓ Final ✓

Ambient Temp. °F 45
Assumed Moisture % 9
Probe Length ACP
C Factor 0.048-1.10 to reference.
Initial Leak @ 15.0 "Hg = 0.005 cfm
Final Leak @ 5.0 "Hg = 0.000 cfm

Point	Clock Time	Dry Gas Meter, CF	ΔP_s "Pitot" "H_2O	Orifice ΔH "H_2O Desired	P_m Orifice ΔH "H_2O Actual	Pump Vacuum "Hg Gauge	T_s Stack Temp °F	Probe Temp °F	Oven Temp °F	Effluent Temp °F	T_m Dry Gas Temp °F Inlet	Dry Gas Temp °F Outlet	Remarks
A4	1450	873.414	0.040	1.40	1.40	3.0	1124	240	235	41	75	78	
5	1453	875.23	0.055	1.25	1.25	3.0	1124	240	238	54	75	80	
4	1456	877.03	0.055	1.25	1.25	3.0	1121	243	240	54	75	81	
3	1459	878.83	0.050	1.15	1.15	3.0	1122	243	241	54	75	83	
2	1502	880.63	0.050	1.15	1.15	3.0	1120	240	245	53	75	84	
1	1505	882.36	0.040	0.92	0.92	2.5	1118	240	250	53	75	84	
END	1508	883.747	–	–	–	–	–	–	–	–	–	–	
B4	1515	883.747	0.040	1.40	1.40	3.0	1122	244	253	45	75	80	
5	1518	885.58	0.040	1.40	1.40	3.0	1125	245	250	55	75	81	
4	1521	887.44	0.050	1.15	1.15	3.0	1121	250	248	55	75	83	
3	1524	889.14	0.055	1.25	1.25	3.0	1123	251	250	55	75	84	
2	1527	890.92	0.050	1.15	1.15	3.0	1123	250	250	55	75	85	
1	1530	892.63	0.045	1.05	1.05	3.0	1120	250	248	54	75	85	
END	1533	894.245	–	–	–	–	–	–	–	–	–	–	
C4	1539	894.245	0.040	1.40	1.40	3.0	1123	254	240	41	75	81	
5	1542	895.94	0.040	1.40	1.40	3.0	1124	250	254	57	75	82	
4	1545	897.87	0.055	1.25	1.25	3.0	1122	250	254	57	75	83	
3	1548	899.41	0.045	1.05	1.05	3.0	1120	244	250	58	75	84	

Pitot Tube Calibration Factor C_p 0.801
Volume Collected V_m 41.742 ft^3
Water Collected V_w 82.2 ml
Time of Test T_t 72 min.
Stack Pressure P_s -0.60 "H_2O

Pitot Tube No. ACP#4
Baro. Press. P_b 30.19 "Hg
Probe Tip Dia. D_n 0.525 in.
% CO_2 3.7 % CO 0.0
% O_2 7.4 % N_2 88.7
Area Stack A_s 7815 in^2

Barometer No. 30-2 Probe Tip No. 08-18-1
Total Volume of Leak Checks After Start: – ft^3
V_m = Dry Gas Meter Calibration Factor 1.014 X 41.185

{Dry Gas Meter Reading – ft^3 – (T_t – min. X Leak Rate – cfm)}

VERSION 2
15 MARCH 2006

Impinger Box No. _____

Impinger 1	Final Weight	870.7	Balance QA ____	Impinger 1	63.3 ✓
	Initial Weight	807.4			
	Increase			Impinger 2	9.5 ✓
Impinger 2	Final Weight	803.3		Impinger 3	1.4 ✓
	Initial Weight	793.8			
	Increase			Impinger 4	7.8 ✓
			V_w =		
Impinger 3	Final Weight	637.7	g SO_2 = -	Impinger 5	
	Initial Weight	636.1	V_w =		
	Increase			Impinger 6	
Impinger 4	Final Weight	983.7		Impinger 7	
	Initial Weight	975.9			
	Increase			Total	82.2 ✓ = V_w

Water Weight Gain

Impinger 5	Final Weight		P_b = 30.19 ✓	$\%CO_2$ =	3.7 ✓
	Initial Weight		V_m = 41.742 ✓	$\%O_2$ =	7.4 ✓
	Increase		V_w = 82.2 ✓	%CO =	0.0 ✓
			P_m = 1.204 ✓	$\%N_2$ =	88.7 ✓
Impinger 6	Final Weight		Avg ΔP = ~~0.0530~~ 0.052 ✓	A_n =	7815 ✓
	Initial Weight			D_n =	0.525 ✓
	Increase		Avg$\sqrt{\Delta P}$ = ~~0.224~~ 0.228 ✓	T_t =	72 ✓
			C_p = 0.801 ✓		
Impinger 7	Final Weight		P_s = -0.40 ✓ "H_2O	30.15 ✓	"Hg
	Initial Weight		T_m = 79 ✓ °F	539 ✓	°R
	Increase		T_s = ~~77~~ 122 °F	1582 ✓	°R

Moisture Content: %M = 8.57 ✓ M_d = 0.9143 ✓ MW_d = 28.896 ✓ MW = 27.96 ✓

$$Vm_{std} = 17.65\ Vm \left[\frac{P_b + \frac{P_m}{13.6}}{T_m + 460}\right] = 17.65 \times 41.742 \left[\frac{30.19 + \frac{1.204}{13.6}}{79 + 460}\right] = \frac{41.407}{0.575}\ \frac{sft^3}{scfm}$$

Vw_{gas} = 0.0472 x Vw = 0.0472 x 82.2 = 3.880 sft^3

$$\%\ Moisture = \frac{Vw_{gas}}{Vm_{std} + Vw_{gas}} \times 100 = \frac{3.880}{41.407 + 3.880} \times 100 = 8.57\ \%$$

$$V_s = 5123.8 \times 0.801 \sqrt{\frac{1582}{30.15 \times 27.96}} \times \frac{0.228}{\cancel{0.224}} = \frac{1,282}{\cancel{1288}}\ fpm$$

$$\%I = \frac{1,039 \times 41.407 \times 1582}{0.9143 \times 30.15 \times \cancel{1287}\ 1,282 \times 72 \times (0.525)^2} = \frac{97.0}{\cancel{96.7}}\ \%$$

ACFM: 69,569 ✓ ~~69,874~~

SCFM: 21,478 ✓

%EA: 47.8 ✓

VERSION 2
15 MARCH 2006

Run Number 3 Pm **FIELD DATA**

Unit Thermo Oxidizer #2

Date 1-18-08

			ΔP_s		P_m		T_s				T_m		
Point	Clock Time	Dry Gas Meter, CF	"Pitot" "H_2O	Orifice ΔH "H_2O Desired	Orifice ΔH "H_2O Actual	Pump Vacuum "Hg Gauge	Stack Temp °F	Probe Temp °F	Oven Temp °F	Effluent Temp °F	Dry Gas Temp °F Inlet	Dry Gas Temp °F Outlet	Remarks
C2	1551	901.20	0.045	1.05	1.05	3.0	1121	246	251	58	75	85	
1	1554	902.78	0.040	0.92	0.92	2.5	1120	247	250	59	75	86	
End	1557	904.257	—	—	—	—	—	—	—	—	—	—	
D6	1604	904.257	0.060	1.40	1.40	3.0	1125	250	254	68	75	81	
5	1607	906.02	0.050	1.15	1.15	3.0	1125	250	250	61	75	82	
4	1610	907.85	0.055	1.25	1.25	3.0	1122	250	245	60	75	83	
3	1613	909.54	0.055	1.25	1.25	3.0	1124	249	248	60	75	84	
2	1616	911.33	0.055	1.25	1.25	3.0	1120	250	246	60	75	85	
1	1619	913.11	0.045	1.05	1.05	3.0	1119	250	245	60	75	85	
End	1622	914.599	—	—	—	—	—	—	—	—	—	—	

Version 1
22 OCTOBER 2002

ORSAT ANALYSIS DATA FORM

Job Number: 08-18 Sample Location: Thermal Oxidizer #2 Stack

Job Name: Valero Analytical Method: Meth 4

Location: Norco, LA Sample Type: Single point or Multi point; Grab or Integrated

Date: 01-18-08 Leak Check: Time: 0730 (min. 4 minutes) Rate: 0.000

Audit Cylinder #: 0734 Operator: Daniel Moore

Audit Gas Values	Analysis 1	Analysis 2	Analysis 3	Average - % Vol.
CO_2 - % Vol.:				
O_2 - % Vol. :				

Audit Cylinder #:

CO_2 - % Vol.:				
O_2 - % Vol. :				

Run Number 1 Run Time 1033-1133	Analysis 1	Analysis 2	Analysis 3	Average - % Vol.
CO_2 - % Vol.	3.6	3.6	3.6	3.6 ✓
O_2 - % Vol.	7.6	7.6	7.6	7.6 ✓
CO - % Vol.	0.0	0.0	0.0	0.0 ✓
N_2 - % Vol.	88.8	88.8	88.8	88.8 ✓

Run Number 2 Run Time 1257-1357	Analysis 1	Analysis 2	Analysis 3	Average - % Vol.
CO_2 - % Vol.	3.7	3.6	3.7	3.7 ✓
O_2 - % Vol.	7.5	7.5	7.6	7.5 ✓
CO - % Vol.	0.0	0.0	0.0	0.0 ✓
N_2 - % Vol.	88.8	88.9	88.7	88.8 ✓

Run Number 3 Run Time 1450-1550	Analysis 1	Analysis 2	Analysis 3	Average - % Vol.
CO_2 - % Vol.	3.7	3.7	3.7	3.7 ✓
O_2 - % Vol.	7.6	7.6	7.6	7.6 ✓
CO - % Vol.	0.0	0.0	0.0	0.0 ✓
N_2 - % Vol.	88.7	88.7	88.7	88.7 ✓

APPENDIX E

Analytical Data

METCO Environmental

Particulate Analysis Summary

Job Number 08-18

Job Name Valero

Location Norco, La.

Date Analysis Completed 1-25-08

Unit Tested Thermoy #2

Run No.	1	2	3		
Particulate on Filter (mg)	0.7	0	0		
Particulate in Front Wash (mg)*	1.5	6.8	0.5		
MF (mg)	2.2	6.8	0.5		
Particulate in Impinger #1 (mg)					
MT (mg)					

M. Ganter
Analyst

* Less Acetone Residue

METCO Environmental

Particulate Analysis EPA Method 5

Stack Filters

Job Number 08-18 Location Norco, La.

Job Name Valero Unit Tested Thermov #2

Desiccator Time In	1400 1/22				
Desiccator Time Out	1425 1/23	1035 1/24			

Run No. 1	Filter No. 88GK50				
Filter & Particulate + Tare Weight (g)					
Tare Weight (g)					
Filter & Particulate (g)	0.4169	0.4169 ✓			

Filter & Particulate Average (g) 0.4169

Initial Filter Weight (g) 0.4162

Total Particulate (mg) 0.7 ✓

Run No. 2	Filter No. 88GK52				
Filter & Particulate + Tare Weight (g)					
Tare Weight (g)					
Filter & Particulate (g)	0.4133	0.4133 ✓			

Filter & Particulate Average (g) 0.4133

Initial Filter Weight (g) 0.4136

Total Particulate (mg) 0 ✓

Run No. 3	Filter No. 88GK53				
Filter & Particulate + Tare Weight (g)					
Tare Weight (g)					
Filter & Particulate (g)	0.4152	0.4152	✓		

Filter & Particulate Average (g) 0.4152

Initial Filter Weight (g) 0.4162

Total Particulate (mg) 0 ✓

Run No. Blank	Filter No. 88GK49				
Filter & Particulate + Tare Weight (g)					
Tare Weight (g)					
Filter & Particulate (g)	0.4179	0.4181	✓		

Mettler AE240

Filter & Particulate Average (g) 0.4180

Initial Filter Weight (g) 0.4182

Total Particulate (mg) 0 ✓

DMB

Analyst

METCO Environmental

Particulate Analysis EPA Method 5

Front Wash

Job Number 08-18 Location Norco, La.

Job Name Valero Unit Tested Thermox. #2

Desiccator Time In	750 1/24				
Desiccator Time Out	1643 1/24	807 1/25			

Run No. 1	Volume (ml) 160				
Final Weight (g)	130.3953	130.3953			
Initial Weight (g)	130.3928	130.3928			
Particulate Weight (g)	0.0025	0.0025			

Particulate Average (mg) 2.5
Less Acetone Blank (mg) 1.0
Total Particulate (mg) 1.5 ✓

Run No. 2	Volume (ml) 195				
Final Weight (g)	126.3690	126.3691			
Initial Weight (g)	126.3611	126.3611			
Particulate Weight (g)	0.0079	0.0080			

Particulate Average (mg) 8.0
Less Acetone Blank (mg) 1.2
Total Particulate (mg) 6.8 ✓

Run No. 3	Volume (ml) 136				
Final Weight (g)	128.5449	128.5450	✓		
Initial Weight (g)	128.5437	128.5437			
Particulate Weight (g)	0.0012	0.0013			

Particulate Average (mg) 1.3
Less Acetone Blank (mg) 0.8
Total Particulate (mg) 0.5 ✓

Acetone Blank ✓	Volume (ml) 260				
Final Weight (g)	172.0655	172.0653	✓		
Initial Weight (g)	172.0638	172.0638			
Difference (g)	0.0017	0.0015			

Mettler AE240

Average (mg) 1.6 ✓
* mg/l 6.2

* Note: If greater than 7.9 mg/l, use 7.9 mg/l.

MY
Analyst

METCO ENVIRONMENTAL

LABORATORY QUALITY ASSURANCE DATA

BALANCE ID Mettler AE 240 SN K51852

DATE & TIME		100g STD	1.0g STD	0.5g STD	ANALYST	REMARKS
0835 1/9/08	Actual (g)	100.0000	1.0000	0.5000	MB	
	Difference (mg)	0	0	0		
1/10/08 0800	Actual (g)	100.0000	1.0000	0.5000	MB	
	Difference (mg)	0	0	0		
1/11/08 0915	Actual (g)	100.0000	1.0000	0.5000	MB	
	Difference (mg)	0	0	0		
1/14/08 0810	Actual (g)	100.0000	1.0000	0.5000	MB	
	Difference (mg)	0	0	0		
1/15/08 0810	Actual (g)	100.0000	1.0000	0.5000	MB	
	Difference (mg)	0	0	0		
1/16/08 0748	Actual (g)	100.0000	1.0000	0.5000	MB	
	Difference (mg)	0	0	0		
820 1/17/08	Actual (g)	100.0000	1.0000	0.5001	MB	
	Difference (mg)	0	0	+0.1		
1000 1/18/08	Actual (g)	99.9999	1.0000	0.5000	MB	
	Difference (mg)	-0.1	0	0		
1/21/08 1045	Actual (g)	100.0000	1.0000	0.5000	MB	Balance serviced semi annual
	Difference (mg)	0	0	0		
1/22/08 0800	Actual (g)	100.0000	1.0000	0.5000	MB	
	Difference (mg)	0	0	0		
1/23/08 0810	Actual (g)	100.0000	1.0000	0.5000	MB	
	Difference (mg)	0	0	0		
1/24/08 0815	Actual (g)	100.0001	1.0000	0.5001	MB	
	Difference (mg)	+0.1	0	+0.1		
1/25/08 0750		100.0000	1.0000	0.5000	MB	
		0	0	0		

APPENDIX F

Reference Method Monitors Data

Thermal Oxidizer Number 2 Stack (EQT 196)
Oxides of Nitrogen
Concentration

Run Number	Measured (ppm)	Adjusted (ppm*)
1	10.86	10.73
2	11.23	11.20
3	10.80	10.74

*Calculated according to equation 7E-5.

Thermal Oxidizer Number 2 Stack (EQT 196)
Sulfur Dioxide
Concentration

Run Number	Measured (ppm)	Adjusted (ppm*)
1	0.76	0.76
2	3.53	3.52
3	5.21	5.22

*Calculated according to equation 7E-5.

Thermal Oxidizer Number 2 Stack (EQT 196)
Carbon Monoxide
Concentration

Run Number	Measured (ppm)	Adjusted (ppm*)
1	49.12	50.15
2	48.18	49.29
3	46.43	47.61

*Calculated according to equation 7E-5.

Thermal Oxidizer Number 2 Stack (EQT 196)
Total Hydrocarbons
Concentration

Run Number	Measured (ppm)
1	< 0.01
2	< 0.01
3	< 0.01

Thermal Oxidizer Number 2 Stack (EQT 196)
Oxygen
Concentration

Run Number	Measured (%)	Adjusted (%*)
1	7.60	8.00
2	7.19	7.60
3	7.46	7.93

*Calculated according to equation 7E-5.

Thermal Oxidizer Number 2 Stack (EQT 196)
Calibration Summary
Oxides of Nitrogen

Run Number	NO_x Calibration Initial Drift Check (ppm)	NO_x Calibration Final Drift Check (ppm)	NO_x Calibration Average (ppm)	NO_x Zero Initial Drift Check (ppm)	NO_x Zero Final Drift Check (ppm)	NO_x Zero Average (ppm)	Actual NO_x Calibration Value (ppm)	Actual NO_x Zero Value (ppm)
1	43.70	43.20	43.45	0.10	0.20	0.15	43.40	0.00
2	43.20	43.00	43.10	0.20	0.10	0.15	43.40	0.00
3	43.00	43.40	43.20	0.10	0.20	0.15	43.40	0.00

METCO ENVIRONMENTAL

Thermal Oxidizer Number 2 Stack (EQT 196)
Calibration Summary
Sulfur Dioxide

Run Number	SO_2 Calibration Initial Drift Check (ppm)	SO_2 Calibration Final Drift Check (ppm)	SO_2 Calibration Average (ppm)	SO_2 Zero Initial Drift Check (ppm)	SO_2 Zero Final Drift Check (ppm)	SO_2 Zero Average (ppm)	Actual SO_2 Calibration Value (ppm)	Actual SO_2 Zero Value (ppm)
1	43.40	43.50	43.45	0.00	0.00	0.00	43.30	0.00
2	43.50	43.30	43.40	0.00	0.00	0.00	43.30	0.00
3	43.30	43.20	43.25	0.00	0.00	0.00	43.30	0.00

METCO ENVIRONMENTAL

Thermal Oxidizer Number 2 Stack (EQT 196)
Calibration Summary
Carbon Monoxide

Run Number	CO Calibration Initial Drift Check (ppm)	CO Calibration Final Drift Check (ppm)	CO Calibration Average (ppm)	CO Zero Initial Drift Check (ppm)	CO Zero Final Drift Check (ppm)	CO Zero Average (ppm)	Actual CO Calibration Value (ppm)	Actual CO Zero Value (ppm)
1	41.90	41.80	41.85	0.20	0.20	0.20	42.70	0.00
2	41.80	41.70	41.75	0.20	0.00	0.10	42.70	0.00
3	41.70	41.60	41.65	0.00	0.10	0.05	42.70	0.00

METCO ENVIRONMENTAL

Thermal Oxidizer Number 2 Stack (EQT 196)
Calibration Summary
Oxygen

Run Number	O_2 Calibration Initial Drift Check (%)	O_2 Calibration Final Drift Check (%)	O_2 Calibration Average (%)	O_2 Zero Initial Drift Check (%)	O_2 Zero Final Drift Check (%)	O_2 Zero Average (%)	Actual O_2 Calibration Value (%)	Actual O_2 Zero Value (%)
1	11.30	11.20	11.25	0.10	0.10	0.10	11.90	0.00
2	11.20	11.20	11.20	0.10	0.10	0.10	11.90	0.00
3	11.20	11.10	11.15	0.10	0.10	0.10	11.90	0.00

METCO ENVIRONMENTAL

Thermal Oxidizer Number 2 Stack (EQT 196)
System Calibration Bias and Drift Data
Oxides of Nitrogen
Calibration Span = 92.70 ppm

	NO_x Calibration					NO_x Zero					Actual	Actual
Run Number	Initial Response (ppm)	Initial Bias (%*)	Final Response (ppm)	Final Bias (%*)	Drift (%*)	Initial Response (ppm)	Initial Bias (%*)	Final Response (ppm)	Final Bias (%*)	Drift (%*)	NO_x Calibration Value (ppm)	NO_x Zero Value (ppm)
1	43.70	1.19	43.20	0.65	0.54	0.10	0.00	0.20	0.11	0.11	42.60	0.10
2	43.20	0.65	43.00	0.43	0.22	0.20	0.11	0.10	0.00	0.11	42.60	0.10
3	43.00	0.43	43.40	0.86	0.43	0.10	0.00	0.20	0.11	0.11	42.60	0.10

* Percent of Calibration Span

METCO ENVIRONMENTAL

Thermal Oxidizer Number 2 Stack (EQT 196)
System Calibration Bias and Drift Data
Sulfur Dioxide
Calibration Span = 95.00 ppm

	SO_2 Calibration					SO_2 Zero						
Run Number	Initial Response (ppm)	Initial Bias (%*)	Final Response (ppm)	Final Bias (%*)	Drift (%*)	Initial Response (ppm)	Initial Bias (%*)	Final Response (ppm)	Final Bias (%*)	Drift (%*)	Actual SO_2 Calibration Value (ppm)	Actual SO_2 Zero Value (ppm)
1	43.40	0.32	43.50	0.42	0.11	0.00	0.00	0.00	0.00	0.00	43.10	0.00
2	43.50	0.42	43.30	0.21	0.21	0.00	0.00	0.00	0.00	0.00	43.10	0.00
3	43.30	0.21	43.20	0.11	0.11	0.00	0.00	0.00	0.00	0.00	43.10	0.00

* Percent of Calibration Span

METCO ENVIRONMENTAL

Thermal Oxidizer Number 2 Stack (EQT 196)
System Calibration Bias and Drift Data
Carbon Monoxide
Calibration Span = 84.30 ppm

	CO Calibration					CO Zero					Actual	Actual
Run Number	Initial Response (ppm)	Initial Bias (%*)	Final Response (ppm)	Final Bias (%*)	Drift (%*)	Initial Response (ppm)	Initial Bias (%*)	Final Response (ppm)	Final Bias (%*)	Drift (%*)	CO Calibration Value (ppm)	CO Zero Value (ppm)
1	41.90	0.24	41.80	0.36	0.12	0.20	0.12	0.20	0.12	0.00	42.10	0.10
2	41.80	0.36	41.70	0.47	0.12	0.20	0.12	0.00	0.12	0.24	42.10	0.10
3	41.70	0.47	41.60	0.59	0.12	0.00	0.12	0.10	0.00	0.12	42.10	0.10

* Percent of Calibration Span

METCO ENVIRONMENTAL

Thermal Oxidizer Number 2 Stack (EQT 196)
System Calibration Bias and Drift Data
Oxygen
Calibration Span = 20.90 percent

	O_2 Calibration					O_2 Zero					Actual	Actual
Run Number	Initial Response (%)	Initial Bias (%*)	Final Response (%)	Final Bias (%*)	Drift (%*)	Initial Response (%)	Initial Bias (%*)	Final Response (%)	Final Bias (%*)	Drift (%*)	O_2 Calibration Value (%)	O_2 Zero Value (%)
1	11.30	2.87	11.20	3.35	0.48	0.10	0.00	0.10	0.00	0.00	11.90	0.10
2	11.20	3.35	11.20	3.35	0.00	0.10	0.00	0.10	0.00	0.00	11.90	0.10
3	11.20	3.35	11.10	3.83	0.48	0.10	0.00	0.10	0.00	0.00	11.90	0.10

* Percent of Calibration Span

METCO ENVIRONMENTAL

Thermal Oxidizer Number 2 Stack (EQT 196)
Analyzer Calibration Data
Oxides of Nitrogen

Date 01/18/08
Runs 1 - 3
Calibration Span = 92.70 ppm

Gas Range	Actual Calibration Value (ppm)	Analyzer Calibration Response (ppm)	Absolute Difference (ppm)	Difference (%*)
Low	0.00	0.10	0.10	0.11
Mid	43.40	42.60	0.80	0.86
High	92.70	92.90	0.20	0.22

* Percent of Calibration Span

Thermal Oxidizer Number 2 Stack (EQT 196)
Analyzer Calibration Data
Sulfur Dioxide

Date 1/18/08
Runs 1 - 3
Calibration Span = 95.00 ppm

Gas Range	Actual Calibration Value (ppm)	Analyzer Calibration Response (ppm)	Absolute Difference (ppm)	Difference (%*)
Low	0.00	0.00	0.00	0.00
Mid	43.30	43.10	0.20	0.21
High	95.00	95.00	0.00	0.00

* Percent of Calibration Span

Thermal Oxidizer Number 2 Stack (EQT 196)
Analyzer Calibration Data
Carbon Monoxide

Date 01/18/08
Runs 1 - 3
Calibration Span = 84.30 ppm

Gas Range	Actual Calibration Value (ppm)	Analyzer Calibration Response (ppm)	Absolute Difference (ppm)	Difference (%*)
Low	0.00	0.10	0.10	0.12
Mid	42.70	42.10	0.60	0.71
High	84.30	84.50	0.20	0.24

* Percent of Calibration Span

Thermal Oxidizer Number 2 Stack (EQT 196)
Analyzer Calibration Data
Total Hydrocarbons

Date 01/18/08
Runs 1 - 3
Span = 100.00 ppm

Gas Range	Actual Calibration Value (ppm)	Analyzer Calibration Response (ppm)	Absolute Difference (ppm)	Difference (%*)
Zero	0.00	0	0.00	-----
Low	30.00	30.00	0.00	0.00
Mid	47.80	47.90	0.10	0.21
High	85.70	86.10	0.40	-----

* Percent of calibration value

Thermal Oxidizer Number 2 Stack (EQT 196)
Analyzer Calibration Data
Oxygen

Date 01/18/08
Runs 1 - 3
Calibration Span = 20.90 %

Gas Range	Actual Calibration Value (%)	Analyzer Calibration Response (%)	Absolute Difference (%)	Difference (%*)
Low	0.00	0.10	0.10	0.48
Mid	11.90	11.90	0.00	0.00
High	20.90	20.70	0.20	0.96

* Percent of Calibration Span

!

08 18
VALERO
NORCO, LOUISIANA
THERMAL OXIDIZER NUMBER 2 STACK
Page : 1

		O2 %	CO PPM	SO2 PPM	NOX PPM	THC PPM	
01/18/08	07:47	0.1C	0.1C	3.4C	0.1C	0.0C	
01/18/08	07:48	0.1C	0.1C	3.5C	0.1C	0.0C	
01/18/08	07:49	0.1C	0.1C	0.3C	0.1C	0.0C	
01/18/08	07:50	0.1C	0.1C	0.0C	0.1C	0.0C	N_2 - ALM000583
01/18/08	07:51	0.1C	0.1C	0.0C	0.1C	0.0C	
01/18/08	07:52	0.1C	0.1C	0.0C	0.1C	0.0C	
01/18/08	07:53	0.8C	0.1C	0.0C	0.2C	0.0C	
01/18/08	07:54	0.3C	0.1C	0.0C	74.0C	0.0C	
01/18/08	07:55	0.1C	0.1C	0.0C	92.9C	0.0C	
01/18/08	07:56	0.1C	0.1C	0.0C	92.9C	0.0C	- NOX - 92.7 - BLM003537
01/18/08	07:57	0.1C	0.1C	0.0C	93.0C	0.0C	
01/18/08	07:58	5.9C	0.1C	0.0C	80.5C	0.0C	N_2 - ALM000583
01/18/08	07:59	10.8C	0.2C	0.0C	10.9C	0.0C	
01/18/08	08:00	0.1C	0.2C	0.0C	40.9C	0.0C	
01/18/08	08:01	0.1C	0.2C	0.0C	42.4C	0.0C	
01/18/08	08:02	0.1C	0.2C	0.0C	42.5C	0.0C	
01/18/08	08:03	0.1C	0.2C	0.0C	42.6C	0.0C	
01/18/08	08:04	0.1C	0.2C	0.0C	42.6C	0.0C	- NOX - 43.4 - ALM000706
01/18/08	08:05	0.3C	15.5C	0.0C	36.8C	0.0C	
01/18/08	08:06	0.1C	81.7C	0.0C	2.2C	0.0C	
01/18/08	08:07	0.1C	84.5C	0.0C	0.3C	0.0C	
01/18/08	08:08	0.1C	84.6C	0.0C	0.2C	0.0C	
01/18/08	08:09	0.1C	84.5C	0.0C	0.2C	0.0C	- CO - AAL7563 - 84.3
01/18/08	08:10	0.1C	84.6C	0.0C	0.2C	0.0C	
01/18/08	08:11	8.4C	68.2C	0.0C	0.2C	0.0C	
01/18/08	08:12	1.0C	34.5C	0.0C	0.2C	0.0C	N_2 - ALM000583
01/18/08	08:13	0.1C	42.1C	0.0C	0.1C	0.0C	
01/18/08	08:14	0.1C	42.1C	0.0C	0.1C	0.0C	- CO - ALM046180 - 42.7
01/18/08	08:15	0.1C	42.1C	0.0C	0.1C	0.0C	
01/18/08	08:16	4.5C	34.2C	24.1C	0.2C	0.0C	
01/18/08	08:17	0.1C	2.0C	98.7C	0.2C	0.0C	
01/18/08	08:18	0.1C	0.4C	97.6C	0.2C	0.0C	
01/18/08	08:19	0.1C	0.4C	95.0C	0.2C	0.0C	
01/18/08	08:20	0.1C	0.4C	95.0C	0.2C	0.0C	- SO_2 - 95 - BLM002875
01/18/08	08:21	0.1C	0.4C	95.1C	0.2C	0.0C	
01/18/08	08:22	6.7C	0.3C	60.9C	0.2C	0.0C	
01/18/08	08:23	0.1C	0.2C	42.8C	0.2C	0.0C	
01/18/08	08:24	0.1C	0.2C	43.1C	0.2C	0.0C	N_2 - ALM000583
01/18/08	08:25	0.1C	0.2C	43.1C	0.2C	0.0C	
01/18/08	08:26	0.1C	0.2C	43.1C	0.2C	0.0C	- SO_2 - 43.3 - ALM058635
01/18/08	08:27	11.4C	0.1C	15.1C	0.2C	0.0C	
01/18/08	08:28	19.6C	0.0C	0.0C	0.1C	0.0C	
01/18/08	08:29	19.6C	0.0C	0.0C	0.1C	0.0C	
01/18/08	08:30	19.9C	0.0C	0.0C	0.1C	0.0C	
01/18/08	08:31	20.7C	0.0C	0.0C	0.1C	0.0C	

Leak ✓ @ 15 in = 0.000
David Moore

NOX	CO	SO_2	JUM	O_2
0-100 PPM	0-100 PPM	0-100 PPM	0-100 PPM	0-25%
Thermo Electron	Thermo Electron	Bovar Engineered	JUM Engineering	Horiba
Model 42i-HL	Model 48i	Model 721-M	Model VE7	Model - VA-3000
SN-0628919043	SN-0618717294	SN-9472/M81782	SN-0005/1196-10	SN-30204909

!

08 18
VALERO
NORCO, LOUISIANA
THERMAL OXIDIZER NUMBER 2 STACK
Page : 2

		O2 %	CO PPM	SO2 PPM	NOX PPM	THC PPM	
01/18/08	08:32	20.7C	0.0C	0.0C	0.1C	0.0C	
01/18/08	08:33	20.7C	0.0C	0.0C	0.1C	0.0C	Air - ALM052022
01/18/08	08:34	17.4C	0.0C	0.0C	0.2C	0.0C	
01/18/08	08:35	11.9C	0.0C	0.0C	0.1C	0.0C	
01/18/08	08:36	11.9C	0.0C	0.0C	0.1C	0.0C	
01/18/08	08:37	11.9C	0.0C	0.0C	0.1C	0.0C	
01/18/08	08:38	11.9C	0.0C	0.0C	0.1C	0.0C	O_2 - 12.1/11.9 - ALM043275
01/18/08	08:39	11.5C	0.0C	0.0C	0.1C	0.0C	
01/18/08	08:40	0.4C	0.0C	0.0C	0.1C	0.0C	
01/18/08	08:41	0.1C	0.1C	0.0C	0.1C	0.0C	
01/18/08	08:42	0.1C	0.1C	0.0C	2.9C	0.0C	
01/18/08	08:43	0.1C	0.1C	0.0C	17.1C	0.0C	NOX Conv Start
01/18/08	08:44	0.1C	0.1C	0.0C	17.4C	0.0C	
01/18/08	08:45	0.1C	0.1C	0.0C	17.4C	0.0C	
01/18/08	08:46	0.1C	0.1C	0.0C	17.4C	0.0C	
01/18/08	08:47	0.1C	0.1C	0.0C	17.4C	0.0C	
01/18/08	08:48	0.1C	0.1C	0.0C	17.4C	0.0C	
01/18/08	08:49	0.1C	0.1C	0.0C	17.4C	0.1C	
01/18/08	08:50	0.1C	0.1C	0.0C	17.4C	0.5C	
01/18/08	08:51	0.1C	0.1C	0.0C	17.4C	0.1C	
01/18/08	08:52	0.1C	0.1C	0.0C	17.4C	0.7C	
01/18/08	08:53	0.1C	0.1C	0.0C	17.4C	0.0C	
01/18/08	08:54	0.1C	0.1C	0.0C	17.3C	0.0C	
01/18/08	08:55	0.1C	0.1C	0.0C	17.3C	0.0C	
01/18/08	08:56	0.1C	0.1C	0.0C	17.3C	0.0C	
01/18/08	08:57	0.1C	0.1C	0.0C	17.3C	0.0C	
01/18/08	08:58	0.1C	0.1C	0.0C	17.3C	0.0C	N_2 - ALM000583
01/18/08	08:59	0.1C	0.1C	0.0C	17.3C	0.0C	
01/18/08	09:00	0.1C	0.1C	0.0C	17.4C	0.0C	
01/18/08	09:01	0.1C	0.1C	0.0C	17.4C	2.1C	
01/18/08	09:02	0.1C	0.1C	0.0C	17.4C	5.0C	
01/18/08	09:03	0.1C	0.1C	0.0C	17.4C	3.5C	
01/18/08	09:04	0.1C	0.1C	0.0C	17.4C	1.9C	
01/18/08	09:05	0.1C	0.1C	0.0C	17.4C	1.3C	
01/18/08	09:06	0.1C	0.1C	0.0C	17.4C	0.6C	
01/18/08	09:07	0.1C	0.1C	0.0C	17.4C	0.5C	
01/18/08	09:08	0.1C	0.1C	0.0C	17.4C	0.8C	
01/18/08	09:09	0.1C	0.1C	0.0C	17.4C	0.0C	
01/18/08	09:10	0.1C	0.1C	0.0C	17.4C	86.0C	
01/18/08	09:11	0.1C	0.1C	0.0C	17.4C	86.1C	Propane - 85.7 - BLM000800
01/18/08	09:12	0.1C	0.1C	0.0C	17.4C	86.1C	
01/18/08	09:13	0.1C	0.1C	0.0C	17.4C NOX	84.6C	
01/18/08	09:14	0.1C	0.1C	0.0C	17.4C Conv	85.8C	NOX Conv End
01/18/08	09:15	0.1C	0.1C	0.0C	17.4C End	33.4C	
01/18/08	09:16	0.1C	0.1C	0.0C	17.4C	48.4C	

!

08 18
VALERO
NORCO, LOUISIANA
THERMAL OXIDIZER NUMBER 2 STACK
Page : 3

		O2 %	CO PPM	SO2 PPM	NOX PPM	THC PPM
01/18/08	09:17	0.1C	0.1C	0.0C	3.5C	47.9C
01/18/08	09:18	0.1C	0.1C	0.0C	0.2C	47.9C Propane - 47.8 - DLM054530
01/18/08	09:19	0.1C	0.1C	0.0C	0.2C	45.8C
01/18/08	09:20	0.1C	0.1C	0.0C	0.1C	42.6C
01/18/08	09:21	0.1C	0.1C	0.0C	0.1C	15.4C
01/18/08	09:22	0.1C	0.1C	0.0C	0.1C	18.7C
01/18/08	09:23	0.1C	0.1C	0.0C	0.1C	30.0C
01/18/08	09:24	0.1C	0.1C	0.0C	0.1C	30.0C
01/18/08	09:25	0.1C	0.1C	0.0C	0.1C	30.0C Propane - 30 - BAL837
		---	---	---	---	---
AVERAGES :		2.6	7.2	7.7	13.1	8.4

!

08 18
VALERO
NORCO, LOUISIANA
THERMAL OXIDIZER NUMBER 2 STACK
Page : 1

		O2 %	CO PPM	SO2 PPM	NOX PPM	THC PPM	
01/18/08	09:28	10.6C	0.0C	0.0C	0.2C	22.5C	Bias Calc
01/18/08	09:29	11.3C	0.0C	0.0C	0.1C	0.0C	
01/18/08	09:30	11.3C	0.0C	0.0C	0.1C	0.0C	
01/18/08	09:31	11.3C	0.0C	0.0C	0.1C	0.0C	
01/18/08	09:32	11.3C	0.0C	0.0C	0.1C	0.0C	
01/18/08	09:33	11.2C	0.0C	0.0C	0.1C	0.0C	
01/18/08	09:34	6.7C	0.0C	0.0C	7.7C	0.0C	
01/18/08	09:35	0.2C	0.1C	0.0C	42.8C	0.0C	
01/18/08	09:36	0.1C	0.2C	0.0C	43.7C	0.0C	
01/18/08	09:37	0.1C	0.2C	0.0C	43.7C	0.0C	
01/18/08	09:38	0.2C	0.2C	0.0C	43.7C	0.0C	
01/18/08	09:39	0.4C	0.2C	11.2C	36.4C	0.0C	
01/18/08	09:40	0.1C	0.2C	36.7C	1.2C	0.1C	
01/18/08	09:41	0.1C	0.2C	38.6C	0.3C	0.1C	
01/18/08	09:42	0.1C	0.2C	39.1C	0.2C	0.1C	
01/18/08	09:43	0.1C	0.2C	40.3C	0.2C	0.0C	
01/18/08	09:44	0.1C	0.2C	43.1C	0.2C	0.0C	
01/18/08	09:45	0.1C	0.3C	43.3C	0.2C	0.0C	
01/18/08	09:46	0.1C	0.2C	43.4C	0.2C	0.0C	
01/18/08	09:47	0.3C	5.0C	30.4C	0.2C	0.1C	
01/18/08	09:48	0.1C	39.0C	1.0C	0.1C	0.1C	
01/18/08	09:49	0.1C	41.9C	0.0C	0.1C	0.6C	
01/18/08	09:50	0.1C	41.9C	0.0C	0.2C	1.7C	
01/18/08	09:51	0.1C	41.9C	0.0C	0.1C	1.6C	
		---	---	---	---	---	
AVERAGES :		3.2	7.2	13.6	9.2	1.1	

:

Auxiliary Average Report

DCNID : 30 Site Name : 0818 Aux Interval : 1 Date : 1/18/ 8

Time	O2 %	CO PPM	SO2 PPM	NOX PPM	THC PPM
10:33	8.5000	35.8000	0.0000-	11.0000	0.0000
10:34	8.4000	41.8000	0.0000-	10.8000	0.0000
10:35	8.4000	40.1000	0.0000-	10.8000	0.0000
10:36	8.5000	43.8000	0.0000-	10.8000	0.0000
10:37	8.5000	42.7000	0.0000-	10.9000	0.0000
MAX :	8.5000	43.8000	0.0000	11.0000	0.0000
MIN :	8.4000	35.8000	0.0000	10.8000	0.0000
AVG :	8.4600	40.8400	0.0000	10.8600	0.0000
SCANS:	5	5	5	5	5

!

Auxiliary Average Report

DCNID : 30 Site Name : 0818 Aux Interval : 1 Date : 1/18/ 8

Time	O2 %	CO PPM	SO2 PPM	NOX PPM	THC PPM
10:39	8.4000	44.4000	0.0000-	10.9000	0.0000
10:40	8.3000	40.6000	0.0000-	11.0000	0.0000
10:41	8.2000	40.9000	0.0000-	11.1000	0.0000
10:42	8.2000	45.2000	0.0000-	11.0000	0.0000
10:43	8.1000	42.3000	0.0000-	10.9000	0.0000
10:44	8.0000	33.8000	0.0000-	11.2000	0.0000
10:45	8.0000	39.5000	0.0000-	10.9000	0.0000
10:46	7.9000	38.9000	0.0000-	11.0000	0.0000
10:47	8.0000	52.0000	0.0000-	10.9000	0.0000
10:48	7.8000	42.1000	0.0000-	11.0000	0.0000
10:49	7.8000	35.9000	0.0000-	11.1000	0.0000
10:50	7.8000	37.3000	0.0000-	11.1000	0.0000
10:51	7.9000	52.3000	0.0000-	11.0000	0.0000
10:52	7.8000	49.9000	0.0000-	10.8000	0.0000
10:53	7.7000	43.9000	0.0000-	10.7000	0.0000
10:54	7.8000	47.6000	0.0000-	10.7000	0.0000
10:55	7.8000	56.2000	0.0000-	10.6000	0.0000
10:56	7.7000	54.5000	0.0000-	10.6000	0.0000
10:57	7.6000	44.0000	0.0000-	10.8000	0.0000
10:58	7.5000	45.2000	0.0000-	11.0000	0.0000
10:59	7.5000	41.3000	0.0000-	10.8000	0.0000
11:00	7.5000	49.5000	0.0000-	10.7000	0.0000
11:01	7.5000	49.5000	0.0000	10.6000	0.0000
11:02	7.6000	47.5000	0.2000	10.8000	0.0000
11:03	7.5000	56.5000	0.5000	10.7000	0.0000

SCANS:	25	25	25	25	25

AVG :	7.8360	45.2320	0.0280	10.8760	0.0000

!

Auxiliary Average Report

DCNID : 30 Site Name : 0818 Aux Interval : 1 Date : 1/18/ 8

Time	O2 %	CO PPM	SO2 PPM	NOX PPM	THC PPM
11:04	7.5000	57.7000	0.6000	10.9000	0.0000
11:05	7.5000	53.1000	0.9000	10.8000	0.0000
11:06	7.4000	48.3000	1.3000	10.6000	0.0000
11:07	7.4000	47.0000	1.5000	10.9000	0.0000
11:08	7.4000	49.3000	1.5000	10.9000	0.0000
11:09	7.3000	50.1000	1.3000	10.9000	0.0000
11:10	7.2000	45.9000	1.1000	11.0000	0.0000
11:11	7.2000	49.0000	0.9000	11.0000	0.0000
11:12	7.3000	53.2000	0.8000	10.8000	0.0000
11:13	7.3000	63.9000	0.7000	11.0000	0.0000
11:14	7.3000	62.2000	0.9000	10.8000	0.0000
11:15	7.3000	55.6000	0.9000	10.8000	0.0000
11:16	7.3000	50.7000	0.9000	10.8000	0.0000
11:17	7.3000	52.7000	1.2000	10.8000	0.0000
11:18	7.3000	62.5000	1.4000	10.7000	0.0000
11:19	7.3000	65.1000	1.5000	10.8000	0.0000
11:20	7.3000	53.4000	1.5000	10.9000	0.0000
11:21	7.2000	51.4000	1.2000	11.0000	0.0000
11:22	7.2000	55.9000	0.9000	10.8000	0.0000
11:23	7.2000	52.2000	0.9000	10.8000	0.0000
11:24	7.3000	58.8000	1.0000	10.8000	0.0000
11:25	7.2000	54.2000	1.6000	10.8000	0.0000
11:26	7.1000	52.5000	1.8000	11.0000	0.0000
11:27	7.1000	45.4000	1.8000	10.8000	0.0000
11:28	7.1000	54.5000	2.0000	10.7000	0.0000

11:31	7.1000	54.5000	2.8000	10.9000	0.0000

11:32	7.2000	55.9000	3.2000	10.9000	0.0000
11:33	7.1000	46.2000	3.4000	11.1000	0.0000
MAX :	7.5000	65.1000	3.4000	11.1000	0.0000
MIN :	7.1000	45.4000	0.6000	10.6000	0.0000
AVG :	7.2533	53.7433	1.4867	10.8500	0.0000
SCANS:	30	30	30	30	30
	7.60	49.12	0.76	10.86	

!

Auxiliary Average Report

DCNID : 30 Site Name : 0818 Aux Interval : 1 Date : 1/18/ 8

Time	O2 %	CO PPM	SO2 PPM	NOX PPM	THC PPM
11:37	2.4000	45.9000	1.6000	6.0000	0.0000
11:38	0.1000C	41.8000C	0.1000C	0.2000C	8.3000
11:39	0.1000C	41.8000C	0.0000C	0.2000C	0.5000
11:40	0.1000C	41.8000C	0.0000C	0.2000C	0.4000
11:41	0.1000C	41.8000C	0.0000C	0.2000C	0.4000
11:42	0.4000C	29.0000C	12.5000C	0.3000C	0.4000
11:43	0.1000C	0.7000C	37.6000C	0.2000C	0.4000
11:44	0.1000C	0.2000C	41.5000C	0.2000C	0.3000
11:45	0.1000C	0.2000C	43.6000C	0.2000C	0.2000
11:46	0.1000C	0.2000C	43.5000C	0.2000C	0.2000
11:47	0.1000C	0.2000C	43.3000C	0.2000C	0.2000
11:48	0.1000C	0.2000C	43.1000C	0.2000C	0.1000
11:49	0.3000C	0.2000C	29.6000C	14.0000C	0.1000
11:50	0.5000C	0.2000C	7.0000C	42.0000C	0.1000
11:51	0.2000C	0.2000C	2.1000C	42.6000C	0.1000
11:52	0.1000C	0.2000C	0.9000C	43.2000C	0.2000
11:53	0.1000C	0.2000C	0.3000C	43.2000C	0.2000
11:54	0.3000C	0.1000C	0.1000C	43.1000C	0.2000
11:55	9.8000C	0.0000C	0.0000C	14.0000C	0.2000
11:56	11.2000C	0.0000C	0.0000C	0.3000C	0.2000
11:57	11.2000C	0.0000C	0.0000C	0.2000C	0.2000
11:58	11.2000C	0.0000C	0.0000C	0.2000C	0.3000
11:59	11.2000C	0.0000C	0.0000C	0.2000C	25.3000
12:00	9.2000C	0.0000C	0.0000C	0.2000C	47.7000
12:01	6.8000C	0.0000C	0.0000C	0.2000C	48.0000

!

Auxiliary Average Report

DCNID : 30 Site Name : 0818 Aux Interval : 1 Date : 1/18/ 8

Time	O2 %	CO PPM	SO2 PPM	NOX PPM	THC PPM
12:57	7.6000	51.5000	3.1000	11.1000	0.0000
12:58	7.5000	47.9000	2.8000	11.1000	0.0000
12:59	7.5000	51.6000	2.4000	11.1000	0.0000
13:00	7.5000	42.9000	2.0000	11.1000	0.0000
13:01	7.5000	52.7000	2.0000	11.0000	0.0000
13:02	7.5000	50.7000	2.4000	11.0000	0.0000
13:03	7.5000	51.3000	3.1000	11.1000	0.0000
13:04	7.4000	52.0000	3.2000	11.1000	0.0000
13:05	7.4000	49.2000	3.2000	11.0000	0.0000
13:06	7.4000	48.7000	3.4000	10.9000	0.0000
13:07	7.4000	47.9000	4.1000	11.0000	0.0000
13:08	7.4000	54.5000	4.1000	11.1000	0.0000
13:09	7.4000	52.5000	3.4000	11.1000	0.0000
13:10	7.3000	48.0000	2.6000	11.2000	0.0000
13:11	7.3000	40.6000	2.3000	11.1000	0.0000
13:12	7.3000	48.8000	2.3000	11.2000	0.0000
13:13	7.3000	43.2000	2.7000	11.1000	0.0000
13:14	7.2000	42.1000	3.2000	11.1000	0.0000
13:15	7.3000	49.1000	3.9000	10.9000	0.0000
13:16	7.3000	51.8000	4.5000	10.9000	0.0000
13:17	7.4000	51.4000	5.1000	11.0000	0.0000
13:18	7.3000	57.1000	5.1000	11.1000	0.0000
13:19	7.3000	53.9000	4.1000	11.2000	0.0000
13:20	7.2000	50.3000	3.2000	11.1000	0.0000
13:21	7.3000	54.0000	3.0000	11.0000	0.0000

13:24	7.2000	49.6000	4.1000	11.1000	0.0000

13:25	7.3000	50.9000	4.8000	11.2000	0.0000
13:26	7.2000	50.0000	5.1000	11.1000	0.0000
MAX :	7.6000	57.1000	5.1000	11.2000	0.0000
MIN :	7.2000	40.6000	2.0000	10.9000	0.0000
AVG :	7.3600	50.0233	3.3933	11.0667	0.0000
SCANS:	30	30	30	30	30

:

Auxiliary Average Report

DCNID : 30 Site Name : 0818 Aux Interval : 1 Date : 1/18/ 8

Time	O2 %	CO PPM	SO2 PPM	NOX PPM	THC PPM
13:27	7.3000	56.9000	4.4000	11.3000	0.0000
13:28	7.2000	45.6000	3.4000	11.5000	0.0000
13:29	7.1000	45.2000	3.0000	11.5000	0.0000
13:30	7.2000	44.6000	2.9000	11.5000	0.0000
13:31	7.2000	46.6000	3.3000	11.3000	0.0000
13:32	7.2000	50.7000	3.6000	11.2000	0.0000
13:33	7.1000	50.6000	3.9000	11.3000	0.0000
13:34	7.0000	40.9000	3.8000	11.4000	0.0000
13:35	7.0000	41.8000	3.4000	11.5000	0.0000
13:36	7.0000	43.3000	3.2000	11.4000	0.0000
13:37	7.1000	47.2000	3.4000	11.4000	0.0000
13:38	7.1000	46.8000	3.9000	11.5000	0.0000
13:39	7.1000	46.0000	4.0000	11.5000	0.0000
13:40	7.0000	42.4000	3.6000	11.6000	0.0000
13:41	7.0000	49.2000	3.5000	11.3000	0.0000
13:42	7.1000	44.2000	4.0000	11.5000	0.0000
13:43	7.0000	40.3000	4.4000	11.3000	0.0000
13:44	7.0000	37.9000	4.3000	11.3000	0.0000
13:45	7.0000	47.5000	3.9000	11.2000	0.0000
13:46	7.0000	44.5000	4.3000	11.3000	0.0000
13:47	7.0000	53.2000	4.5000	11.2000	0.0000
13:48	6.9000	55.5000	4.0000	11.3000	0.0000
13:49	6.9000	55.6000	3.4000	11.4000	0.0000
13:50	6.9000	49.8000	3.1000	11.5000	0.0000
13:51	6.9000	47.6000	3.3000	11.4000	0.0000

13:55	6.9000	43.6000	3.5000	11.4000	0.0000
13:56	6.8000	45.0000	3.7000	11.2000	0.0000
MAX :	7.3000	56.9000	4.5000	11.6000	0.0000
MIN :	6.8000	37.9000	2.9000	11.2000	0.0000
AVG :	7.0233	46.3333	3.6633	11.3867	0.0000
SCANS:	30	30	30	30	30
	7.19	48.18	3.53	11.23	

!

Auxiliary Average Report

DCNID : 30 Site Name : 0818 Aux Interval : 1 Date : 1/18/ 8

Time	O2 %	CO PPM	SO2 PPM	NOX PPM	THC PPM
14:01	11.2000C	4.0000C	0.8000C	0.8000C	47.8000
14:02	11.2000C	0.0000C	0.2000C	0.2000C	47.6000
14:03	11.2000C	0.0000C	0.1000C	0.2000C	48.0000
14:04	11.2000C	0.0000C	0.0000C	0.1000C	48.1000
14:05	11.0000C	0.0000C	0.0000C	0.1000C	45.3000
14:06	1.8000C	0.0000C	0.0000C	27.9000C	43.2000
14:07	0.1000C	0.1000C	0.0000C	42.9000C	12.1000
14:08	0.1000C	0.1000C	0.0000C	42.9000C	0.2000
14:09	0.1000C	0.1000C	0.0000C	43.0000C	0.1000
14:10	0.1000C	0.1000C	1.1000C	42.8000C	0.1000
14:11	0.1000C	0.1000C	29.2000C	10.4000C	0.0000
14:12	0.1000C	0.1000C	41.5000C	0.3000C	0.0000
14:13	0.1000C	0.1000C	43.8000C	0.3000C	0.0000
14:14	0.1000C	0.1000C	43.3000C	0.2000C	0.0000
14:15	0.1000C	0.1000C	43.3000C	0.2000C	0.0000
14:16	0.1000C	0.1000C	43.5000C	0.2000C	0.1000
14:17	0.4000C	13.7000C	24.8000C	0.2000C	0.1000
14:18	0.1000C	41.2000C	3.9000C	0.2000C	0.2000
14:19	0.1000C	41.7000C	1.6000C	0.1000C	0.2000
14:20	0.1000C	41.7000C	1.0000C	0.1000C	0.2000
14:21	0.1000C	41.7000C	0.6000C	0.2000C	0.3000
MAX :	11.2000	41.7000	43.8000	43.0000	48.1000
MIN :	0.1000	0.0000	0.0000	0.1000	0.0000
AVG :	2.8286	8.8095	13.2714	10.1571	13.9810

!

Auxiliary Average Report

DCNID : 30 Site Name : 0818 Aux Interval : 1 Date : 1/18/ 8

Time	O2 %	CO PPM	SO2 PPM	NOX PPM	THC PPM
14:50	6.5000	48.2000	7.0000	11.4000	0.0000
14:51	6.4000	46.0000	6.1000	11.3000	0.0000
14:52	6.4000	43.5000	5.2000	11.5000	0.0000
14:53	6.4000	44.9000	5.5000	11.4000	0.0000
14:54	6.4000	46.2000	5.5000	11.5000	0.0000
14:55	6.5000	47.2000	5.1000	11.6000	0.0000
14:56	7.5000	42.3000	4.4000	11.1000	0.0000
14:57	8.1000	46.6000	4.1000	10.4000	0.0000
14:58	7.9000	43.5000	4.7000	10.4000	0.0000
14:59	7.9000	42.1000	5.3000	10.2000	0.0000
15:00	7.9000	40.5000	5.4000	10.2000	0.0000
15:01	7.9000	41.3000	5.2000	10.2000	0.0000
15:02	7.8000	48.0000	5.0000	10.1000	0.0000
15:03	7.8000	43.1000	4.8000	10.1000	0.0000
15:04	7.8000	39.7000	4.4000	10.0000	0.0000
15:05	7.8000	40.0000	4.3000	10.0000	0.0000
15:06	7.8000	38.2000	4.5000	10.0000	0.0000
15:07	7.8000	45.9000	4.8000	10.0000	0.0000
15:08	7.8000	46.4000	4.9000	10.0000	0.0000
15:09	7.9000	52.5000	4.9000	10.0000	0.0000
15:10	7.8000	56.4000	4.7000	10.0000	0.0000
15:11	7.8000	57.6000	5.0000	10.0000	0.0000
15:12	7.8000	53.2000	5.3000	10.3000	0.0000
15:13	7.8000	50.7000	5.1000	10.3000	0.0000
15:14	7.8000	53.5000	4.9000	10.2000	0.0000

15:17	7.7000	49.2000	4.7000	10.4000	0.0000

15:18	7.7000	47.0000	4.7000	10.6000	0.0000
15:19	7.7000	58.5000	4.5000	10.2000	0.0000
MAX :	8.1000	58.5000	7.0000	11.6000	0.0000
MIN :	6.4000	38.2000	4.1000	10.0000	0.0000
AVG :	7.5267	47.0067	4.9600	10.4667	0.0000
SCANS:	30	30	30	30	30

!

Auxiliary Average Report

DCNID : 30 Site Name : 0818 Aux Interval : 1 Date : 1/18/ 8

Time	O2 %	CO PPM	SO2 PPM	NOX PPM	THC PPM
15:20	7.7000	54.2000	4.3000	10.5000	0.0000
15:21	7.7000	61.7000	4.5000	10.5000	0.0000
15:22	7.7000	51.2000	5.2000	10.6000	0.0000
15:23	7.7000	51.2000	6.0000	10.7000	0.0000
15:24	7.7000	53.2000	5.9000	10.6000	0.0000
15:25	7.7000	52.9000	5.2000	10.7000	0.0000
15:26	7.8000	58.7000	4.7000	10.8000	0.0000
15:27	7.7000	59.2000	4.6000	10.8000	0.0000
15:28	7.7000	44.2000	5.4000	11.1000	0.0000
15:29	7.7000	38.2000	5.9000	11.2000	0.0000
15:30	7.7000	40.5000	5.6000	11.1000	0.0000
15:31	7.6000	40.4000	5.4000	11.1000	0.0000
15:32	7.6000	45.2000	5.2000	11.0000	0.0000
15:33	7.7000	41.8000	5.2000	11.1000	0.0000
15:34	7.6000	40.0000	5.2000	11.0000	0.0000
15:35	7.7000	44.4000	5.1000	11.0000	0.0000
15:36	7.6000	45.5000	5.2000	11.0000	0.0000
15:37	7.2000	38.8000	5.4000	11.4000	0.0000
15:38	7.2000	43.6000	5.7000	11.4000	0.0000
15:39	7.1000	50.5000	5.7000	11.3000	0.0000
15:40	7.1000	44.2000	5.7000	11.5000	0.0000
15:41	7.0000	44.7000	5.8000	11.6000	0.0000
15:42	7.1000	43.6000	5.7000	11.5000	0.0000
15:43	7.0000	42.2000	5.7000	11.5000	0.0000
15:44	6.9000	35.0000	6.4000	11.6000	0.0000

15:47	6.9000	39.6000	5.4000	11.6000	0.0000

15:48	6.9000	44.0000	5.7000	11.6000	0.0000
15:49	7.0000	45.8000	5.7000	11.4000	0.0000
MAX :	7.8000	61.7000	6.6000	11.6000	0.0000
MIN :	6.9000	35.0000	4.3000	10.5000	0.0000
AVG :	7.4000	45.8467	5.4600	11.1400	0.0000
SCANS:	30	30	30	30	30
	7.46	46.43	5.21	10.80	

!

Auxiliary Average Report

DCNID : 30 Site Name : 0818 Aux Interval : 1 Date : 1/18/ 8

Time	O2 %	CO PPM	SO2 PPM	NOX PPM	THC PPM
15:52	2.1000C	42.3000C	2.7000C	5.9000C	3.8000 C
15:53	0.1000C	41.6000C	0.8000C	0.2000C	40.7000 C
15:54	0.1000C	41.6000C	0.4000C	0.2000C	48.1000 C
15:55	0.1000C	41.6000C	0.1000C	0.2000C	48.0000 C
15:56	0.1000C	41.6000C	0.2000C	0.2000C	47.5000 C
15:57	0.2000C	18.6000C	23.1000C	0.3000C	44.8000 C
15:58	0.1000C	0.2000C	41.2000C	0.2000C	31.0000 C
15:59	0.1000C	0.1000C	44.4000C	0.2000C	0.0000 C
16:00	0.1000C	0.1000C	43.6000C	0.2000C	0.0000 C
16:01	0.1000C	0.1000C	43.2000C	0.2000C	0.0000 C
16:02	0.1000C	0.1000C	43.4000C	0.2000C	0.0000 C
16:03	0.2000C	0.1000C	37.4000C	4.8000C	0.0000 C
16:04	0.2000C	0.1000C	9.1000C	40.5000C	0.0000 C
16:05	0.2000C	0.1000C	3.1000C	43.4000C	0.0000 C
16:06	0.1000C	0.1000C	1.6000C	43.6000C	0.0000 C
16:07	0.1000C	0.1000C	0.9000C	43.6000C	0.0000 C
16:08	0.2000C	0.1000C	0.6000C	43.6000C	0.0000 C
16:09	9.0000C	0.0000C	0.0000C	18.5000C	0.0000 C
16:10	11.1000C	0.0000C	0.0000C	0.3000C	0.0000 C
16:11	11.1000C	0.0000C	0.0000C	0.2000C	0.0000 C
16:12	11.1000C	0.0000C	0.0000C	0.2000C	0.0000 C
MAX :	11.1000	42.3000	44.4000	43.6000	48.1000
MIN :	0.1000	0.0000	0.0000	0.2000	0.0000
AVG :	2.2143	10.8810	14.0857	11.7476	12.5667
SCANS:	21	21	21	21	21

APPENDIX G

Plant Operational Data

Setup	
Start Date / Time	1/18/08
Interval	0:01:00 min
Duration	0.104 days

Current Data	
Start Time	1/18/08 14:50
End Time	10/9/07 16:58
Avg Fire Rate	27.05

Summary:

Run	Time Start	Time End	Gas Rate to Thermal Oxidizer (MMBTU/hr)	Unit Production Rate (LTon/day)
1	1/18/08 10:33	1/18/08 11:33	26.22	282.68
2	1/18/08 12:57	1/18/08 13:57	26.09	280.30
3	1/18/08 14:50	1/18/08 15:50	27.05	280.05

Process Data

Time	Gas Rate to Thermal Oxidizer (MMBTU/hr) FI-30-4118.PV	Unit Production Rate (LTon/day) FI-30-3100B.PV
1/18/08 14:50	26.30	280.81
1/18/08 14:51	26.27	280.80
1/18/08 14:52	26.28	280.21
1/18/08 14:53	26.28	278.62
1/18/08 14:54	26.21	276.77
1/18/08 14:55	26.17	277.07
1/18/08 14:56	26.17	276.83
1/18/08 14:57	26.21	277.39
1/18/08 14:58	26.16	278.69
1/18/08 14:59	26.10	279.23
1/18/08 15:00	26.04	279.89
1/18/08 15:01	26.03	280.29
1/18/08 15:02	25.94	281.32
1/18/08 15:03	26.03	281.72
1/18/08 15:04	26.02	281.74
1/18/08 15:05	25.93	281.83
1/18/08 15:06	25.82	282.15
1/18/08 15:07	25.82	280.96
1/18/08 15:08	25.91	281.83
1/18/08 15:09	26.21	281.93
1/18/08 15:10	26.32	281.58
1/18/08 15:11	26.40	281.43
1/18/08 15:12	26.51	280.98
1/18/08 15:13	26.57	280.89
1/18/08 15:14	26.65	281.30
1/18/08 15:15	26.64	282.20
1/18/08 15:16	26.67	282.64
1/18/08 15:17	26.88	282.51
1/18/08 15:18	27.10	282.52
1/18/08 15:19	27.21	282.98
1/18/08 15:20	27.24	282.31
1/18/08 15:21	27.26	281.83
1/18/08 15:22	27.28	281.35
1/18/08 15:23	27.44	280.66
1/18/08 15:24	27.65	277.37
1/18/08 15:25	27.90	277.31
1/18/08 15:26	27.89	277.26
1/18/08 15:27	27.88	277.20
1/18/08 15:28	27.87	278.39
1/18/08 15:29	27.84	278.19
1/18/08 15:30	27.83	278.15

Run 1			Run 2			Run 3		
Time	Gas Rate to Thermal Oxidizer (MMBTU/hr) FI-30-4118.PV	Unit Production Rate (LTon/day) FI-30-3100B.PV	Time	Gas Rate to Thermal Oxidizer (MMBTU/hr) FI-30-4118.PV	Unit Production Rate (LTon/day) FI-30-3100B.PV	Time	Gas Rate to Thermal Oxidizer (MMBTU/hr) FI-30-4118.PV	Unit Production Rate (LTon/day) FI-30-3100B.PV
1/18/08 10:33	26.62	282.06	1/18/08 12:57	26.2	281.81	1/18/08 14:50	26.3	280.81
1/18/08 10:34	26.61	281.72	1/18/08 12:58	26.21	282.28	1/18/08 14:51	26.27	280.8
1/18/08 10:35	26.51	281.29	1/18/08 12:59	26.16	281.82	1/18/08 14:52	26.28	280.21
1/18/08 10:36	26.46	281.22	1/18/08 13:00	26.13	283.11	1/18/08 14:53	26.28	278.62
1/18/08 10:37	26.42	281.52	1/18/08 13:01	26.12	282.87	1/18/08 14:54	26.21	276.77
1/18/08 10:38	26.45	281.75	1/18/08 13:02	26.16	283.83	1/18/08 14:55	26.17	277.07
1/18/08 10:39	26.52	281.6	1/18/08 13:03	26.16	285.14	1/18/08 14:56	26.17	276.83
1/18/08 10:40	26.48	280.36	1/18/08 13:04	26.1	284.97	1/18/08 14:57	26.21	277.39
1/18/08 10:41	26.38	279.85	1/18/08 13:05	26.11	284.41	1/18/08 14:58	26.16	278.69
1/18/08 10:42	26.35	279.65	1/18/08 13:06	26.18	283.52	1/18/08 14:59	26.1	279.23
1/18/08 10:43	26.26	279.32	1/18/08 13:07	26.22	283.03	1/18/08 15:00	26.04	279.89
1/18/08 10:44	26.11	279.08	1/18/08 13:08	26.19	283.96	1/18/08 15:01	26.03	280.29
1/18/08 10:45	26.06	279.89	1/18/08 13:09	26.19	283.82	1/18/08 15:02	25.94	281.32
1/18/08 10:46	26.06	280.39	1/18/08 13:10	26.21	283.5	1/18/08 15:03	26.03	281.72
1/18/08 10:47	26.04	280.58	1/18/08 13:11	26.08	284.46	1/18/08 15:04	26.02	281.74
1/18/08 10:48	25.97	280.2	1/18/08 13:12	26.06	284.15	1/18/08 15:05	25.93	281.83
1/18/08 10:49	25.97	279.77	1/18/08 13:13	26.03	284.77	1/18/08 15:06	25.82	282.15
1/18/08 10:50	25.96	281.28	1/18/08 13:14	26.05	285.54	1/18/08 15:07	25.82	280.96
1/18/08 10:51	26.02	282.53	1/18/08 13:15	26.07	284.75	1/18/08 15:08	25.91	281.83
1/18/08 10:52	26.02	281.67	1/18/08 13:16	26.07	284.07	1/18/08 15:09	26.21	281.93
1/18/08 10:53	25.89	281.62	1/18/08 13:17	26.06	284.9	1/18/08 15:10	26.32	281.58
1/18/08 10:54	25.84	281.8	1/18/08 13:18	26.09	284.43	1/18/08 15:11	26.4	281.43
1/18/08 10:55	25.86	281.3	1/18/08 13:19	26.11	284.32	1/18/08 15:12	26.51	280.98
1/18/08 10:56	25.87	281.54	1/18/08 13:20	26.11	283.98	1/18/08 15:13	26.57	280.89
1/18/08 10:57	25.96	281.62	1/18/08 13:21	26.15	283.84	1/18/08 15:14	26.65	281.3
1/18/08 10:58	26.03	281.55	1/18/08 13:22	26.15	283.4	1/18/08 15:15	26.64	282.2
1/18/08 10:59	25.92	281.02	1/18/08 13:23	26.13	283.05	1/18/08 15:16	26.67	282.64
1/18/08 11:00	25.93	280.38	1/18/08 13:24	26.17	281.74	1/18/08 15:17	26.88	282.51
1/18/08 11:01	25.93	280.29	1/18/08 13:25	26.27	281.25	1/18/08 15:18	27.1	282.52
1/18/08 11:02	25.93	280.83	1/18/08 13:26	26.27	279.89	1/18/08 15:19	27.21	282.98
1/18/08 11:03	25.95	281.91	1/18/08 13:27	26.28	279.28	1/18/08 15:20	27.24	282.31
1/18/08 11:04	25.99	282.59	1/18/08 13:28	26.28	279.6	1/18/08 15:21	27.26	281.83
1/18/08 11:05	26.03	282.89	1/18/08 13:29	26.29	279.88	1/18/08 15:22	27.28	281.35
1/18/08 11:06	26.05	282.6	1/18/08 13:30	26.29	279.55	1/18/08 15:23	27.44	280.66
1/18/08 11:07	26.07	284.27	1/18/08 13:31	26.3	279.57	1/18/08 15:24	27.65	277.37
1/18/08 11:08	26.12	286.09	1/18/08 13:32	26.3	279.6	1/18/08 15:25	27.9	277.31
1/18/08 11:09	26.17	285.25	1/18/08 13:33	26.26	279.78	1/18/08 15:26	27.89	277.26
1/18/08 11:10	26.15	284.25	1/18/08 13:34	26.22	279.22	1/18/08 15:27	27.88	277.2
1/18/08 11:11	26.13	284.21	1/18/08 13:35	26.25	278.04	1/18/08 15:28	27.87	278.39
1/18/08 11:12	26.19	283.7	1/18/08 13:36	26.24	277	1/18/08 15:29	27.84	278.19
1/18/08 11:13	26.29	283.7	1/18/08 13:37	26.18	276.5	1/18/08 15:30	27.83	278.15

1/18/08 15:31	27.90	278.74
1/18/08 15:32	27.92	277.75
1/18/08 15:33	27.93	277.84
1/18/08 15:34	27.87	277.99
1/18/08 15:35	27.89	278.33
1/18/08 15:36	27.90	278.09
1/18/08 15:37	27.88	279.27
1/18/08 15:38	27.88	279.74
1/18/08 15:39	27.85	278.58
1/18/08 15:40	27.83	279.47
1/18/08 15:41	27.89	280.30
1/18/08 15:42	27.92	280.63
1/18/08 15:43	27.92	280.60
1/18/08 15:44	27.91	280.61
1/18/08 15:45	27.88	281.63
1/18/08 15:46	27.85	281.81
1/18/08 15:47	27.75	281.26
1/18/08 15:48	27.66	280.20
1/18/08 15:49	27.58	280.43
1/18/08 15:50	27.65	280.82
1/18/08 15:51	27.66	280.31
1/18/08 15:52	27.59	280.57
1/18/08 15:53	27.43	280.65
1/18/08 15:54	27.48	280.62
1/18/08 15:55	27.58	279.83
1/18/08 15:56	27.58	278.40
1/18/08 15:57	27.46	277.71
1/18/08 15:58	27.45	277.97
1/18/08 15:59	27.46	279.40
1/18/08 16:00	27.45	279.32
1/18/08 16:01	27.38	279.31
1/18/08 16:02	27.31	279.30
1/18/08 16:03	27.23	279.37
1/18/08 16:04	27.09	279.91
1/18/08 16:05	27.04	279.85
1/18/08 16:06	27.04	279.67
1/18/08 16:07	27.10	279.77
1/18/08 16:08	27.09	279.38
1/18/08 16:09	27.09	278.01
1/18/08 16:10	27.07	278.23
1/18/08 16:11	27.05	279.50
1/18/08 16:12	27.11	279.84
1/18/08 16:13	27.07	280.29
1/18/08 16:14	26.96	280.56
1/18/08 16:15	26.99	280.98
1/18/08 16:16	27.04	280.61
1/18/08 16:17	27.03	280.25
1/18/08 16:18	27.07	279.93
1/18/08 16:19	27.08	279.43
1/18/08 16:20	27.00	279.76
1/18/08 16:21	26.93	280.47
1/18/08 16:22	26.92	281.20
1/18/08 16:23	27.00	281.03
1/18/08 16:24	26.99	280.91
1/18/08 16:25	26.95	280.99
1/18/08 16:26	26.98	280.50
1/18/08 16:27	27.07	280.89
1/18/08 16:28	27.09	280.82

1/18/08 11:14	26.31	284.16	1/18/08 13:38	26.19	276.19	1/18/08 15:31	27.9	278.74
1/18/08 11:15	26.36	283.66	1/18/08 13:39	26.24	276.57	1/18/08 15:32	27.92	277.75
1/18/08 11:16	26.38	283.85	1/18/08 13:40	26.26	276.35	1/18/08 15:33	27.93	277.84
1/18/08 11:17	26.29	283.85	1/18/08 13:41	26.2	276.56	1/18/08 15:34	27.87	277.99
1/18/08 11:18	26.28	283.06	1/18/08 13:42	26.12	277.05	1/18/08 15:35	27.89	278.33
1/18/08 11:19	26.35	282.94	1/18/08 13:43	25.98	278.02	1/18/08 15:36	27.9	278.09
1/18/08 11:20	26.42	283.45	1/18/08 13:44	25.96	278.39	1/18/08 15:37	27.88	279.27
1/18/08 11:21	26.38	283.57	1/18/08 13:45	25.96	277.41	1/18/08 15:38	27.88	279.74
1/18/08 11:22	26.35	284.85	1/18/08 13:46	25.87	276.66	1/18/08 15:39	27.85	278.58
1/18/08 11:23	26.36	285.54	1/18/08 13:47	25.82	275.65	1/18/08 15:40	27.83	279.47
1/18/08 11:24	26.42	285.86	1/18/08 13:48	25.86	274.49	1/18/08 15:41	27.89	280.3
1/18/08 11:25	26.55	286.61	1/18/08 13:49	25.87	273.9	1/18/08 15:42	27.92	280.63
1/18/08 11:26	26.56	287.13	1/18/08 13:50	25.91	273.09	1/18/08 15:43	27.92	280.6
1/18/08 11:27	26.36	287.32	1/18/08 13:51	25.92	273.27	1/18/08 15:44	27.91	280.61
1/18/08 11:28	26.29	286.68	1/18/08 13:52	25.83	273.16	1/18/08 15:45	27.88	281.63
1/18/08 11:29	26.34	286.11	1/18/08 13:53	25.79	275.14	1/18/08 15:46	27.85	281.81
1/18/08 11:30	26.37	284.48	1/18/08 13:54	25.68	277.42	1/18/08 15:47	27.75	281.26
1/18/08 11:31	26.44	283.14	1/18/08 13:55	25.64	277.81	1/18/08 15:48	27.66	280.2
1/18/08 11:32	26.62	284.19	1/18/08 13:56	25.55	277.88	1/18/08 15:49	27.58	280.43
1/18/08 11:33	26.6	283.87	1/18/08 13:57	25.58	278.92	1/18/08 15:50	27.65	280.82

1/18/08 16:29	27.12	280.71
1/18/08 16:30	27.09	280.35
1/18/08 16:31	27.06	280.70
1/18/08 16:32	27.06	280.49
1/18/08 16:33	27.20	280.89
1/18/08 16:34	27.15	280.43
1/18/08 16:35	27.15	280.89
1/18/08 16:36	27.09	280.82
1/18/08 16:37	27.07	281.03
1/18/08 16:38	27.08	281.39
1/18/08 16:39	27.11	282.00
1/18/08 16:40	27.13	282.04
1/18/08 16:41	27.07	282.19
1/18/08 16:42	27.03	280.96
1/18/08 16:43	27.05	279.83
1/18/08 16:44	27.16	279.28
1/18/08 16:45	27.20	278.16
1/18/08 16:46	27.22	278.57
1/18/08 16:47	27.15	279.16
1/18/08 16:48	27.05	278.95
1/18/08 16:49	27.04	277.66
1/18/08 16:50	27.05	277.74
1/18/08 16:51	27.00	277.28
1/18/08 16:52	26.98	276.86
1/18/08 16:53	26.92	276.83
1/18/08 16:54	26.94	277.40
1/18/08 16:55	26.89	277.98
1/18/08 16:56	26.75	278.47
1/18/08 16:57	26.69	278.55
1/18/08 16:58	26.80	279.50
1/18/08 16:59	26.87	280.61
1/18/08 17:00	26.73	281.51
1/18/08 17:01	26.71	280.79

APPENDIX H

Chain of Custody

METCO Environmental ©

CHAIN OF CUSTODY RECORD

Job No.: 08-18
Job Name: Valero
Location: Norco, LA
Unit: Thermal Oxidizer Number 2 Stack

Project Manager: M. Hutcherson
Project Supervisor: D. Moore

Method: 5

SAMPLE I.D.	DATE	TIME	# OF CONT.	Absorb. Solution	Initial Vol.	SAMPLE ANALYSIS REQUIRED: PART	HCL	CL2	SO2	SO3			Recovered by	REMARKS (Specific Compounds/Methods)
Reagent Blank - A Filter	1-17-08	1445	1	Filter	—	✓							D. Moore	
Reagent Blank - Acetone	1-17-08	1450	1	Acetone	200 ml	✓							D. Moore	
Run 1 - Filter	1-18-08	1230	1	Filter	—	✓							D. Moore	
Run 1 - Front Half	1-18-08	1235	1	Acetone	—	✓							D. Moore	
Run 2 - Filter	1-18-08	1302	1	Filter	—	✓							D. Moore	
Run 2 - Front Half	1-18-08	1307	1	Acetone	—	✓							D. Moore	

Samples Received for Transport/Shipment by:	David Moore	Date: 1-18-08	Time: 17:00
Samples Received for Transport/Shipment by:	[illegible]	Date: 1/21/08	Time: 0800
Samples Received for Transport/Shipment by:		Date:	Time:
Samples Shipped Via:	Fed-Ex	Date: 1/21/08	Time: 1600
Samples Received at Laboratory by:	[illegible]	Date: 1/22/08	Time: 1145
Samples Analyzed by:	M. Banter	Date: 1/25/08	Time: 0845
Samples Analyzed by:		Date:	Time:
Data Checked by:	MM	Date: 01/25/08	Time: 1300

VERSION 2
10 MARCH 2003

METCO Environmental ©

CHAIN OF CUSTODY RECORD

Job No.: 08-18
Job Name: Valero
Location: Norco, LA
Unit: Thermal Oxidizer Number 2 Stack

Project Manager: M. Hutchinson
Project Supervisor: D. Moon

Method: 5

SAMPLE I.D.	DATE	TIME	# OF CONT.	Absorb. Solution	Initial Vol.	SAMPLE ANALYSIS REQUIRED: PART	HCL	CL2	SO2	SO3	Methane/Ethane		Recovered by	REMARKS (Specific Compounds/Methods)
Run 3 Filter	1-18-08	1612	1	Filter	—	✓							D. Moon	
Run 3 Front Half	1-18-08	1618	1	—	—	✓							D. Moon	
Run 1 Bag Meth 18	1-18-08	1133	1	—	—						✓		D. Moon	
Run 2 Bag Meth 18	1-18-08	1400	1	—	—						✓		D. Moon	
Run 3 Bag Meth 18	1-18-08	1552	1	—	—						✓		D. Moon	

Samples Received for Transport/Shipment by: Daniel Moon	Date: 1-18-08	Time: 1700
Samples Received for Transport/Shipment by: [illegible]	Date: 1/21/08	Time: 0800
Samples Received for Transport/Shipment by:	Date:	Time:
Samples Shipped Via: Fed-Ex	Date: 1/21/08	Time: 1600
Samples Received at Laboratory by: M. Hutchinson	Date: 1/22/08	Time: 1145
Samples Analyzed by: M. Banter	Date: 1/25/08	Time: 0845
Samples Analyzed by:	Date:	Time:
Data Checked by: [illegible]	Date: 01/25/08	Time: 1300

VERSION 2
10 MARCH 2003

APPENDIX I

Resumes of Test Personnel

ROBERT M. PATTERSON; President

Education	B. S. 1983, Central Michigan University; Mt. Pleasant, Michigan, in Geology and Earth Science-Meteorology.
Professional Training Courses	Attended a two-day short course, "Performing and Observing Source Sampling" in Dallas, Texas. Attended a one-day short course on basic supervision. Attended a four-week management course presented by the American Management Association, 1991-1992.
Certification	Certified Visible Emissions Evaluator Certified Cabot Full-Face Respirator Fit Tester
Professional Memberships	Source Evaluation Society American Management Association
Technical Experience	Participated in the sampling of over 1,000 sources, including several of which were sampled simultaneously using more than one sampling train. Thoroughly trained in all EPA testing procedures, 1986-present. Over nineteen years experience with EPA and Texas Air Control Board methods of sampling - both stationary sources and ambient air. CFR, Title 40, Chapter I, Part 60, EPA Methods 1 through 25, and 101 through 110. Performance Specifications 1 through 5. CFR, Title 40, Chapter I, Part 50, Appendix A through F. "Sampling Procedures Manual, Texas Air Control Board, January 1983." Parts 1-1 through 14-6, Appendix B through Appendix M. Experienced with sampling Method 0010, Modified Method 5 Sampling Train; Method 0030, Volatile Organic Sampling Train; and various EPA and "Site Specific" multiple metal and acid gas sampling trains.

(continued)

PATTERSON, Rob (cont'd)

Technical Experience (cont'd)

Over twenty one years experience with EPA and Texas Air Control Board methods of analysis of both stationary and ambient air samples. Particulate matter, SO_3, SO_2, H_2SO_4, NO_x, CO, CO_2, O_2, H_2S, F, TRS, HCl, Cl_2, NH_3, VOC, C_1-C_7, and other organics. Both laboratory and on-site analyses were performed.

Experienced in the sampling and analysis of commercial calibration gas cylinders for sulfur dioxide, oxides of nitrogen, carbon dioxide, oxygen, carbon monoxide, and C_1-C_7 hydrocarbons.

Thoroughly trained in the operation and routine maintenance of the following:

- MSA LIRA Model 202S Infrared Analyzer
- Analytical Instrument Development, Inc. Model 340A Calibration System
- Shimadzu GC-Mini 2 Gas Chromatograph
- Thermo Environmental Model 10AR Oxides of Nitrogen Analyzer
- Thermo Oxygen Analyzer
- Teledyne Model 326 Oxygen Analyzer
- Thermo Environmental Model 48 Carbon Monoxide Analyzer
- Thermo Environmental Model 40 Sulfur Dioxide Analyzer
- Ratfisch Model RS 100 Total Hydrocarbon Analyzer
- Western Research Model 721AT Sulfur Dioxide Analyzer
- Horiba Model PIR 2000 Carbon Dioxide Analyzer
- Ratfisch Model RS 55 Total Hydrocarbon Analyzer
- J.U.M. Model VE-7 Total Hydrocarbon Analyzer

JAMES R. MONFRIES; Senior Quality Assurance Manager

Education	B. S. 1975, University of Texas at Arlington; Arlington, Texas, in Biology with a minor in Chemistry. Graduate work at the University of Texas at Dallas in the Environmental Science Department.
Professional Training Courses	Attended a two-day short course, "Performing and Observing Source Sampling" in Dallas, Texas, July 1976.
Certification	Certified Visible Emissions Evaluator
Professional Memberships	Air and Waste Management Association Source Evaluation Society - Past President
Technical Experience	Participated in the sampling of over 700 sources, serving in the supervisory capacity on over 500 sources. Many of the sources were sampled simultaneously using more than one sampling train at several points in the flue gas stream, 1976-present. Has also supervised several ambient air monitoring studies, including a permanent five-station high volume air sampling network in South Texas, a permanent four-station high volume air sampling network in Pennsylvania, and a permanent seven-station sulfur dioxide sampling network in East Texas. Was Quality Assurance Manager for several ambient air monitoring studies; including a four-station high volume air sampling network for TSP and PM10 in Midlothian, Texas; a single-station high volume air sampling network for PM10 in South Texas; a two-station high volume air sampling network for TSP in Wichita Falls, Texas; and a four-station continuous air sampling network for TSP and PM10 in Jewett, Texas using Thermo Andersen FH 62 C14 Beta Gauge Dust Monitors.

(continued)

MONFRIES, James (cont'd)

Twenty years experience with EPA and Texas Commission on Environmental Quality methods of analysis of both source and ambient air samples for particulates, SO_2, SO_3, H_2SO_4, H_2S, HCI, Cl_2, NO_x, Hydrocarbons, and TRS.

Experienced in the analysis of commercial calibration gas cylinders for sulfur dioxide and oxides of nitrogen.

Experienced with VOST and Modified Method 5 Sampling Procedures.

Thoroughly trained in the operation and routine maintenance of the following:

- Lear Siegler, Inc. SM800 Stack Gas Monitor
- Du Pont Model 460/1 Photometric Analyzer System
- Lear Siegler, Inc. SM1000 Ambient SO_2 Monitor
- Calibrated Instruments Ultragas SO_2 Monitor
- Meloy 285E SO_2 Analyzer
- Meloy SA-700 Fluorescent SO_2 Analyzer
- MSA LIRA Model 202S Infrared Analyzer
- Analytical Instrument Development, Inc. Model 340A Calibration System
- Shimadzu GC-Mini 2 Gas Chromatograph
- Thermo Environmental Model 10S NO_x Analyzer
- Thermo Oxygen Analyzer
- Teledyne Model 326 Oxygen Analyzer
- Thermo Environmental Model 48 Carbon Monoxide Analyzer
- Thermo Environmental Model 40 Sulfur Dioxide Analyzer
- Ratfisch Model RS 103 Total Hydrocarbon Analyzer
- Western Research Model 721AT Sulfur Dioxide Analyzer
- Horiba Model PIR 2000 Carbon Dioxide Analyzer
- Ratfisch Model RS 55 Total Hydrocarbon Analyzer
- J.U.M. Model VE-7 Total Hydrocarbon Analyzer
- Thermo Andersen Model FH 62 C14 Dust Monitor

DANIEL MOORE; Project Supervisor I

Education	Process Technician, October 2000; Louisiana Technical College, River Parishes Campus.
Certifications	Certified Visible Emissions Evaluator HAZMAT certified Adult CPR certified Standard First Aid certified
Technical Experience	Participated in the sampling of over 150 sources, including several of which were sampled simultaneously using more than one sampling train. Thoroughly trained in all EPA testing procedures, 2001-present.

RYAN WILLIAMS; Project Supervisor I

Education	B. S. Agricultural Service & Development, May 2001; Tarleton State University, Stephenville, Texas.
Technical Experience	Participated in the sampling of over 150 sources, including several of which were sampled simultaneously using more than one sampling train. Thoroughly trained in all EPA testing procedures, 2005-present.

PAUL LOGAN NEHRING; Environmental Scientist I

Education	B. S. (Plant Pathology), May 2004; University of Florida, Gainesville, Florida.
Technical Experience	Participated in the sampling of over 25 sources, including several of which were sampled simultaneously using more than one sampling train. Thoroughly trained in all EPA testing procedures, 2007-present.

CHRISTOPHER JASON PEREZ; Environmental Scientist I

Education	B. S. in Chemistry, August 2007; University of Texas, Austin, Texas.
Technical Experience	Participated in the sampling of over 25 sources, including several of which were sampled simultaneously using more than one sampling train. Thoroughly trained in all EPA testing procedures, 2007-present.