METCO ENVIRONMENTAL
P.O. Box 598
Addison, TX 75001
(972) 931-7127

LELAP Certificate # 02034

SOURCE EMISSIONS SURVEY
OF
VALERO REFINING - NEW ORLEANS, L. L. C.
ST. CHARLES REFINERY
1600 THERMAL OXIDIZER (EQT 0241)
NORCO, LOUISIANA

APRIL 2009

FILE NUMBER 09-177

"I certify that I have personally checked and am familiar with the information submitted herein, and based on my inquiries of those individuals immediately responsible for obtaining the information, I believe the submitted information is true, accurate, and complete."

_____

James R. Monfries
Senior Quality Assurance Manager

METCO ENVIRONMENTAL

TABLE OF CONTENTS

	PAGE
INTRODUCTION	1
SUMMARY OF RESULTS	2
DISCUSSION OF RESULTS	6
DESCRIPTION OF PROCESS	8
DESCRIPTION OF SAMPLING LOCATION	9
SAMPLING AND ANALYTICAL PROCEDURES	11
DESCRIPTION OF TESTS	20
APPENDICES	22
A. Location of Sampling Points	4 pages
B. Source Emission Calculations	16 pages
C. Calibration Data	24 pages
D. Field Testing Data	11 pages
E. Analytical Data	8 pages
F. Reference Method Monitors Data	124 pages
G. Plant Operational Data	2 pages
H. Chain of Custody	3 pages
I. Resumes of Test Personnel	8 pages
	222 total pages

SOURCE EMISSIONS SURVEY
OF
VALERO REFINING - NEW ORLEANS, L. L. C.
ST. CHARLES REFINERY
1600 THERMAL OXIDIZER (EQT 0241)
NORCO, LOUISIANA
FILE NUMBER 09-177

INTRODUCTION

METCO Environmental, 6655 Complex Drive, Baton Rouge, Louisiana, conducted a source emissions survey of Valero Refining – New Orleans, L. L. C., St. Charles Refinery, located at 14902 River Road, Norco, Louisiana, on April 13 through 16, 2009. The purpose of these tests was to determine the concentrations of particulate matter, sulfur dioxide, oxides of nitrogen, carbon monoxide, and total hydrocarbons being emitted to atmosphere via the 1600 Thermal Oxidizer (EQT 0241). Three tests were performed while the unit was operating at an average unit production rate of 58.43 LTon/day.

The sampling was performed by the following METCO personnel: Daniel Moore – Project Supervisor, Jason Pilgrim, and Chad Centorbi.

The sampling followed the procedures set forth in the Code of Federal Regulations, Title 40, Chapter I, Part 60, Appendix A, Methods 1, 2, 3A, 3B, 4, 5, 6C, 7E, 10, and 25A.

SUMMARY OF RESULTS

1600 Thermal Oxidizer

Run Number	Particulate Matter Emissions (gr/dscf[1])	(lbs/hr)	(lbs/mmBtu)	Oxides of Nitrogen Emissions (dry ppm)	(lbs/hr)	(lbs/mmBtu)	Carbon Monoxide Emissions (dry ppm)	(lbs/hr)	(lbs/mmBtu)
1	0.0046	0.85	0.054	15.98	2.48	0.159	12.86	1.21	0.078
2	0.0067	1.21	0.080	15.12	2.30	0.152	15.39	1.42	0.095
3	0.0044	0.80	0.050	14.85	2.28	0.144	13.06	1.22	0.077
Average	0.0052	0.95	0.062	15.32	2.35	0.152	13.77	1.28	0.083

Run Number	Sulfur Dioxide Emissions (dry ppm)	(lbs/hr)	(lbs/mmBtu)	40 CFR 60 Subpart J Sulfur Dioxide Emissions (dry ppm[2])	(dry ppm[2,3])	Total Hydrocarbons Emissions as Propane (dry ppm)	(lbs/hr)	(lbs/mmBtu)
1	9.77	2.10	0.135	9.23	20.98	0.11	0.02	0.001
2	9.49	2.00	0.133	10.58	23.84	0.11	0.02	0.001
3	8.98	1.92	0.121	8.62	19.01	<0.01	<0.01	<0.001
Average	9.31	2.01	0.128	9.48	21.28	<0.08	<0.02	<0.001

1 29.92 "Hg, 68°F (760 mm Hg, 20°C)
2 Each run consists of the average of four, one hour samples.
3 Corrected to 0% oxygen

METCO ENVIRONMENTAL

SUMMARY OF RESULTS

1600 Thermal Oxidizer

Run Number	1	2	3
Date	04/14/09	04/14/09	04/15/09
Time	1200-1411	1450-1643	0900-1041
Stack Flow Rate - ACFM	70,690	69,049	69,514
Stack Flow Rate - DSCFM*	21,629	21,201	21,437
% Water Vapor - % Vol.	7.99	7.95	8.09
% CO_2 - % Vol.	3.7	3.6	3.5
% O_2 - % Vol. (orsat)	12.1	11.6	11.5
% O_2 - % Vol. (monitor)	12.08	11.57	11.51
% Excess Air @ Sampling Point	118.5	106.7	104.3
Stack Temperature - °F	1,139	1,131	1,127
Stack Pressure - "Hg	30.01	29.97	30.06
Percent Isokinetic	96.3	97.5	99.4
Unit Heat Input – mmBtu/hr	15.6	15.1	15.9
Particulates Matter Emissions Probe & Filter Catch grains/dscf*	0.0046	0.0067	0.0044
grains/cf @ Stack Conditions	0.0014	0.0020	0.0013
lbs/hr	0.85	1.21	0.80
lbs/mmBtu	0.054	0.080	0.050

* 29.92 "Hg, 68°F (760 mm Hg, 20°C)

SUMMARY OF RESULTS

1600 Thermal Oxidizer

Run Number	1	2	3
% O_2 - % Vol. (monitor)	12.08	11.57	11.51
Oxides of Nitrogen Emissions - dry ppm	15.98	15.12	14.85
Oxides of Nitrogen Emissions - lbs/hr	2.48	2.30	2.28
Oxides of Nitrogen Emissions - lbs/mmBtu	0.159	0.152	0.144
Sulfur Dioxide Emissions - dry ppm	9.77	9.49	8.98
Sulfur Dioxide Emissions - dry ppm*	23.15	21.26	19.99
Sulfur Dioxide Emissions - lbs/hr	2.10	2.00	1.92
Sulfur Dioxide Emissions - lbs/mmBtu	0.135	0.133	0.121
Carbon Monoxide Emissions - dry ppm	12.86	15.39	13.06
Carbon Monoxide Emissions - lbs/hr	1.21	1.42	1.22
Carbon Monoxide Emissions - lbs/mmBtu	0.078	0.095	0.077
Total Hydrocarbons Emissions as Propane - wet ppm	0.10	0.10	<0.01
Total Hydrocarbons Emissions as Propane - dry ppm	0.11	0.11	<0.01
Total Hydrocarbons Emissions as Propane - lbs/hr	0.02	0.02	<0.01
Total Hydrocarbons Emissions as Propane - lbs/mmBtu	0.001	0.001	<0.001

* Corrected to 0% oxygen

SUMMARY OF RESULTS

1600 Thermal Oxidizer

Run Number	4	5	6
% O_2 - % Vol. (monitor)	11.60	11.53	11.54
Sulfur Dioxide Emissions - dry ppm	8.69	10.20	10.21
Sulfur Dioxide Emissions - dry ppm*	19.53	22.75	22.80

Run Number	7	8	9
% O_2 - % Vol. (monitor)	11.73	11.67	11.30
Sulfur Dioxide Emissions - dry ppm	11.66	10.25	10.81
Sulfur Dioxide Emissions - dry ppm*	26.58	23.21	23.53

Run Number	10	11	12
% O_2 - % Vol. (monitor)	11.44	11.50	11.51
Sulfur Dioxide Emissions - dry ppm	7.82	7.85	7.98
Sulfur Dioxide Emissions - dry ppm*	17.28	17.45	17.76

* Corrected to 0% oxygen

DISCUSSION OF RESULTS

The three tests for particulate matter, sulfur dioxide, oxides of nitrogen, carbon monoxide, and total hydrocarbons appeared to be valid representations of the actual emissions during the tests. All leak checks performed on the sampling train, the pitot tubes, and the reference method monitors sampling systems showed no leaks before or after each test. The zero and calibration drift tests of the reference method monitors were stable with no variations greater than 3.0 percent. The calibration error check, sampling system bias check, and NO_2 to NO conversion efficiency check performed on the reference method monitors prior to testing were valid. The indicative parameters calculated from the field data were in close agreement. The moisture percentages for the three tests were within 1.0 percent of the mean value. The measured flow rates (Q_s) for the tests were within 1.0 percent of the mean value. The rates of sampling for the three tests were within the specified limits (90 to 110 percent isokinetic). The greatest deviation from 100 percent was 3.7 percent.

The NO_2 to NO conversion efficiency check was performed prior to testing on April 14, 2009, from 0837-0907. The results were as follows:

Highest peak value observed: 22.0 ppm
Value observed after 30 minutes: 21.9 ppm
NO_2 to NO conversion efficiency (%) = (Value observed after 30 minutes/Highest peak value observed) x 100
(21.9/22.0) x 100 = 99.5%

The required allowable as found in 40 CFR, Part 60, Appendix A, Method 7E, is 98.0%. Therefore, the NO_2 to NO conversion efficiency check was valid.

The calculated emissions (pounds per hour) of particulate matter for the three tests showed a range of -16.1 percent to +26.9 percent variation from the mean value.

The calculated emissions (pounds per hour) of oxides of nitrogen for the three tests showed a range of -3.1 percent to +5.4 percent variation from the mean value.

The calculated emissions (pounds per hour) of sulfur dioxide for the three tests showed a range of -4.3 percent to +4.7 percent variation from the mean value.

The calculated emissions (pounds per hour) of carbon monoxide for the three tests showed a range of -5.7 percent to +10.6 percent variation from the mean value.

The concentrations of total hydrocarbons for one of three tests were below the minimum detectable limit of the method.

DESCRIPTION OF PROCESS

Valero utilizes thermal oxidizers to thermally destroy gaseous vapor from the sulfur recovery unit. The thermal oxidizers are fueled with refining fuel gas and are equipped with a "dry" basis SO_2/O_2 CEMS that measures flue gas concentration downstream of the combustion chamber prior to discharge to the atmosphere.

DESCRIPTION OF SAMPLING LOCATION

The sampling location on the 1600 Thermal Oxidizer is approximately 124 feet above the ground. The sampling ports are located 66 feet (7.94 stack diameters) downstream from a constriction in the stack and 9 feet 3 inches (1.11 stack diameters) upstream from a constriction in the stack.

SAMPLING LOCATION

1600 Thermal Oxidizer

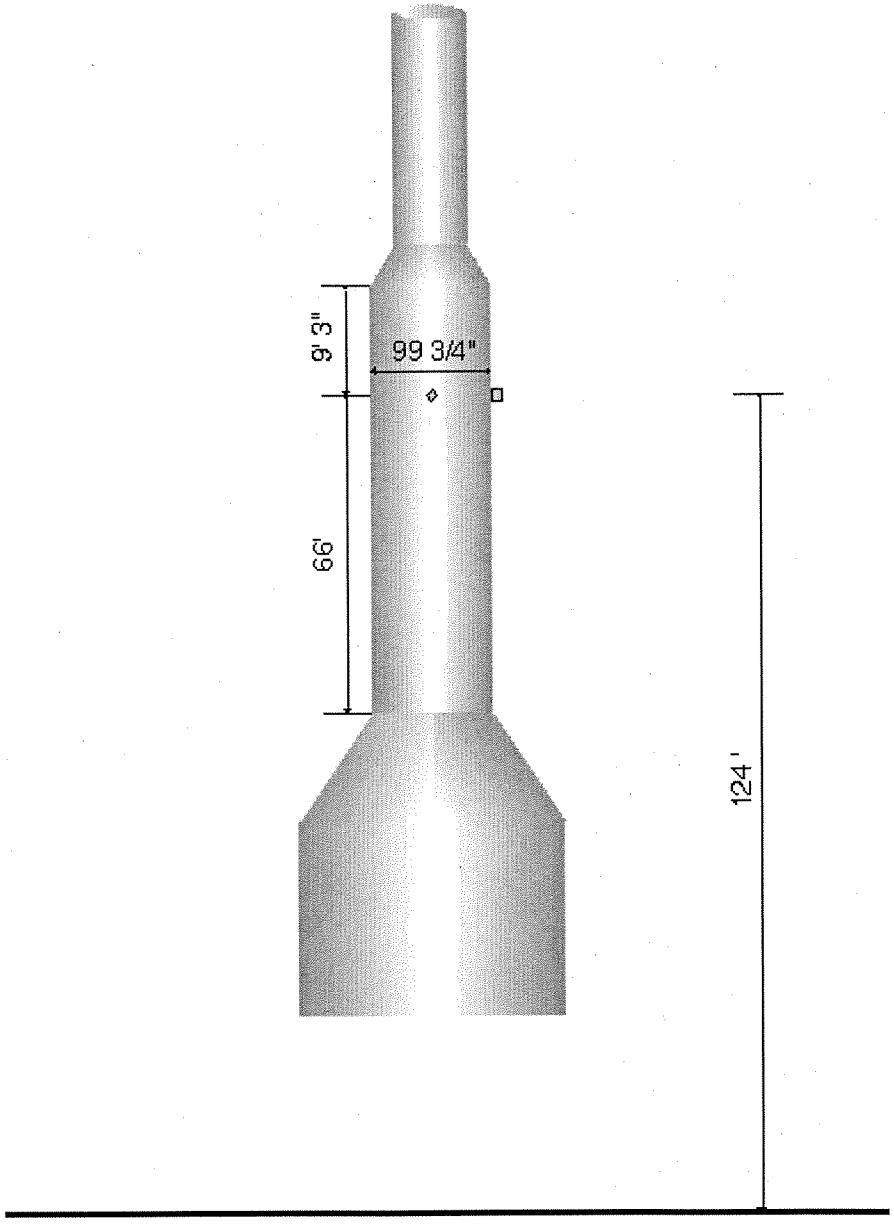

Not to Scale

SAMPLING AND ANALYTICAL PROCEDURES

The sampling followed the procedures set forth in the Code of Federal Regulations, Title 40, Chapter I, Part 60, Appendix A, Methods 1, 2, 3A, 3B, 4, 5, 6C, 7E, 10, and 25A.

A preliminary velocity traverse was made at each of the four ports on the stack, in order to determine the uniformity and magnitude of the flow prior to testing. All traverse points were checked for cyclonic flow and the average angle of flow was equal to 1.67 degrees. Alternate procedures would be required if the angle of flow was greater than 20 degrees. Six traverse points were sampled from each of the four ports for a total of twenty-four traverse points.

The sampling train was leak-checked at the nozzle before each test, and again after each test. This was done to predetermine the possibility of a diluted sample.

The pitot tube lines were checked for leaks before and after each test under both a vacuum and a pressure. The lines were also checked for clearance and the manometer was zeroed before each test.

An integrated grab orsat sample was collected and analyzed according to EPA Method 3B during each test.

Particulate Matter

Triplicate samples for particulate matter were collected. The samples were taken according to EPA Methods 1, 2, 3B, 4, and 5. For each run, samples of three-minute

duration were taken isokinetically at each of the twenty-four traverse points for a total sampling time of 72 minutes. Reagent blanks were submitted.

The "front-half" of the sampling train contained the following components:

Quartz Nozzle
Air Cooled Quartz Probe @ 248°F ± 25°F
Heated Glass Fiber Filter and Glass Support @ 248°F ± 25°F

The "back-half" of the sampling train contained the following components:

Impinger Number	Contents	Amount	Parameter Collected
1	Deionized Water	100 ml	Moisture
2	Deionized Water	100 ml	Moisture
3	Empty	--------	Moisture
4	Silica Gel	200 g	Moisture

Particulate matter emissions were calculated from gravimetric analysis using only the " front-half " collections of the sampling train.

Oxides of Nitrogen

The oxides of nitrogen sampling was performed according to EPA Method 7E. A Thermo Environmental Model 42C Oxides of Nitrogen Analyzer (Serial Number 66054-351) was used to monitor the concentrations of oxides of nitrogen during each run. The reference method analyzer was operated in the NO_x mode at a range of 0 to 100 parts per million, with a calibration span of 93.40 parts per million. A multi-point calibration was performed on the reference method analyzer prior to testing. An analyzer calibration error check, a sampling system bias check, and a NO_2 to NO conversion efficiency check were also conducted prior to testing. After each run, the zero and calibration drift of the reference method monitor was checked.

The calibration gases were as follows:

Zero Nitrogen

46.80 ppm NO in N_2 (ALM 28529)

93.40 ppm NO in N_2 (BLM 1483)

The reference method sampling system consisted of a heated probe, a chilled condenser, and a Teflon sample line. The calibration gases for the bias and drift checks were introduced upstream of the chilled condenser.

Calibration gas certifications are included in Appendix C.

Sulfur Dioxide

The sulfur dioxide sampling was performed according to EPA Method 6C. A Western Research Model 721M Sulfur Dioxide Analyzer (Serial Number 94-721M-8896-1) was used to monitor the concentrations of sulfur dioxide during each run. The reference method analyzer was operated at a range of 0 to 100 parts per million, with calibration spans of 93.80 part per million. A multi-point calibration was performed on the reference method analyzer prior to testing. An analyzer calibration error check and a sampling system bias check were also conducted prior to testing. After each run, the zero and calibration drift of the reference method monitor was checked.

The calibration gases were as follows:

Zero Nitrogen

44.35 ppm SO_2 in N_2 (ALM 59290)

93.80 ppm SO_2 in N_2 (BLM 5088)

The reference method sampling system consisted of a heated probe, a chilled condenser, and a Teflon sample line. The calibration gases for the bias and drift checks were introduced upstream of the chilled condenser.

Calibration gas certifications are included in Appendix C.

Carbon Monoxide

The carbon monoxide sampling was performed according to EPA Method 10 using the continuous sampling procedure. A Thermo Environmental Model 48C Carbon Monoxide Analyzer (Serial Number 48C-72815-372) was used to monitor the concentrations of carbon monoxide during each run. The reference method analyzer was operated at a range of 0 to 100 parts per million, with a calibration span of 94.10 parts per million. A multi-point calibration was performed on the reference method analyzer prior to testing. An analyzer calibration error check and a sampling system bias check were also conducted prior to testing. After each run, the zero and calibration drift of the reference method monitor was checked.

The calibration gases were as follows:

Zero Nitrogen
42.70 ppm CO in N_2 (ALM 41473)
94.10 ppm CO in N_2 (AAL 19513)

The reference method sampling system consisted of a heated probe, a chilled condenser, and a Teflon sample line. The calibration gases for the bias and drift checks were introduced upstream of the chilled condenser.

Calibration gas certifications are included in Appendix C.

Total Hydrocarbons

The total hydrocarbons sampling was performed according to EPA Method 25A. A J.U.M. Model VE-7 Total Hydrocarbon Analyzer (Serial Number 9670591) was used to monitor the concentrations of total hydrocarbons during the run. The reference method analyzer was operated at a range of 0 to 100 parts per million. A multi-point calibration was performed on the reference method analyzer prior to testing. An analyzer calibration error check and a sampling system bias check were also conducted prior to testing. After each run, the zero and calibration drift of the reference method monitor was checked.

The calibration gases were as follows:

Zero Nitrogen

26.10 ppm C_3H_8 in N_2 (BLM 3905)

47.30 ppm C_3H_8 in N_2 (LL 6768)

86.10 ppm C_3H_8 in N_2 (LL 78615)

The reference method sampling system consisted of a heated probe and a heated Teflon sample line. The calibration gases for the bias and drift checks were introduced upstream of the heated Teflon sample line.

Calibration gas certifications are included in Appendix C.

Oxygen

The oxygen sampling was performed according to EPA Method 3A. A Teledyne Model 326A Oxygen Analyzer (Serial Number 106423) was used to monitor the concentrations of oxygen during each run. The reference method analyzer was operated at a range of 0 to 25 percent, with a calibration span of 20.9 percent. A multi-point calibration was performed on the reference method analyzer prior to testing. An analyzer calibration error check and a sampling system bias check were also conducted prior to testing. After each run, the zero and calibration drift of the reference method monitor was checked.

The calibration gases were as follows:

Zero Nitrogen
11.80 percent O_2 in N_2 (ALM 6904)
20.90 percent O_2 in air (AAL 20005)

The reference method sampling system consisted of a heated probe, a chilled condenser, and a Teflon sample line. The calibration gases for the bias and drift checks were introduced upstream of the chilled condenser.

Calibration gas certifications are included in Appendix C.

Schematic Diagram of the EPA Method 5 Sampling Train

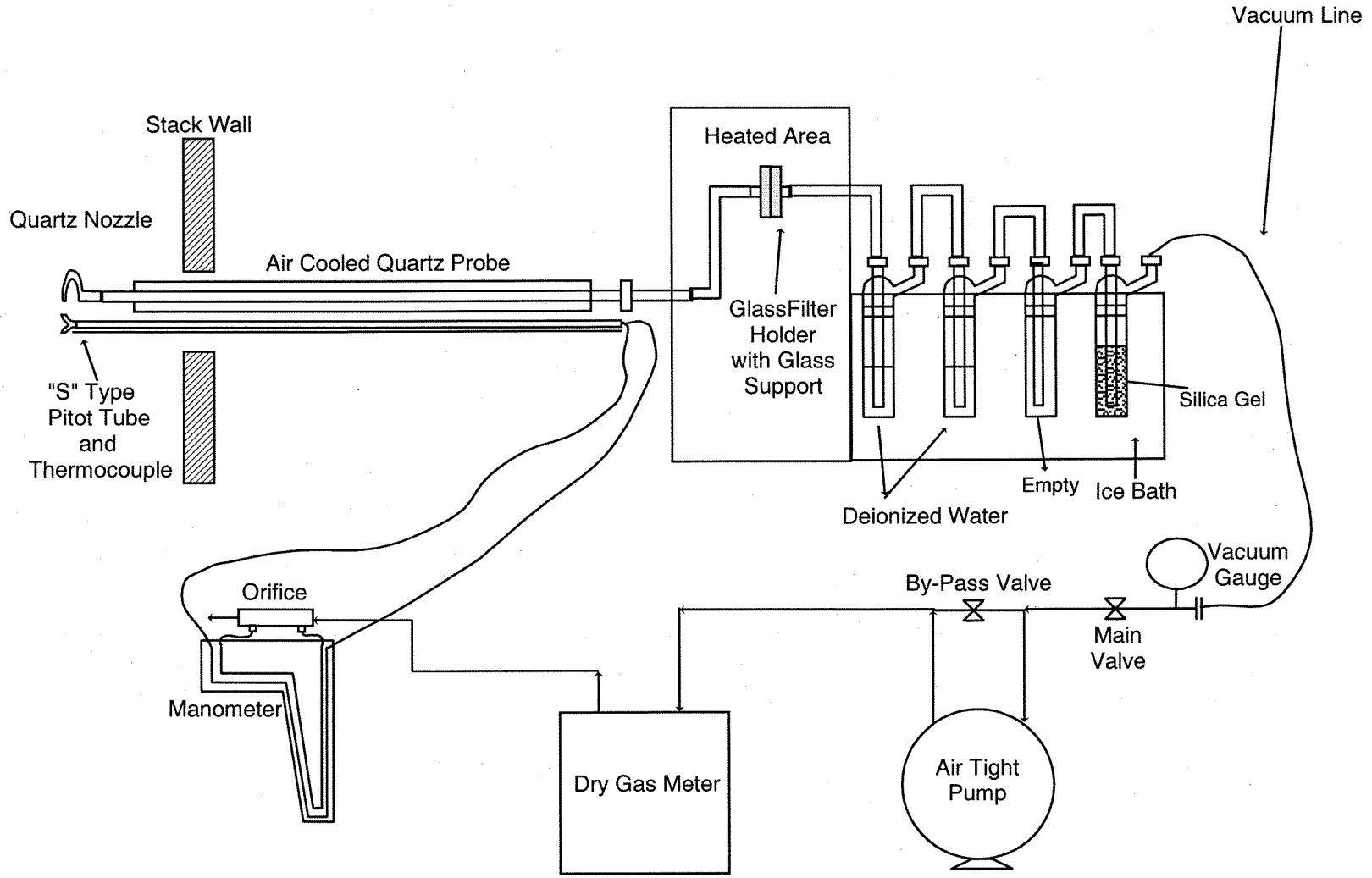

METCO ENVIRONMENTAL

Reference Method Monitors Sampling System (EPA Methods 3A, 6C, 7E, and 10)

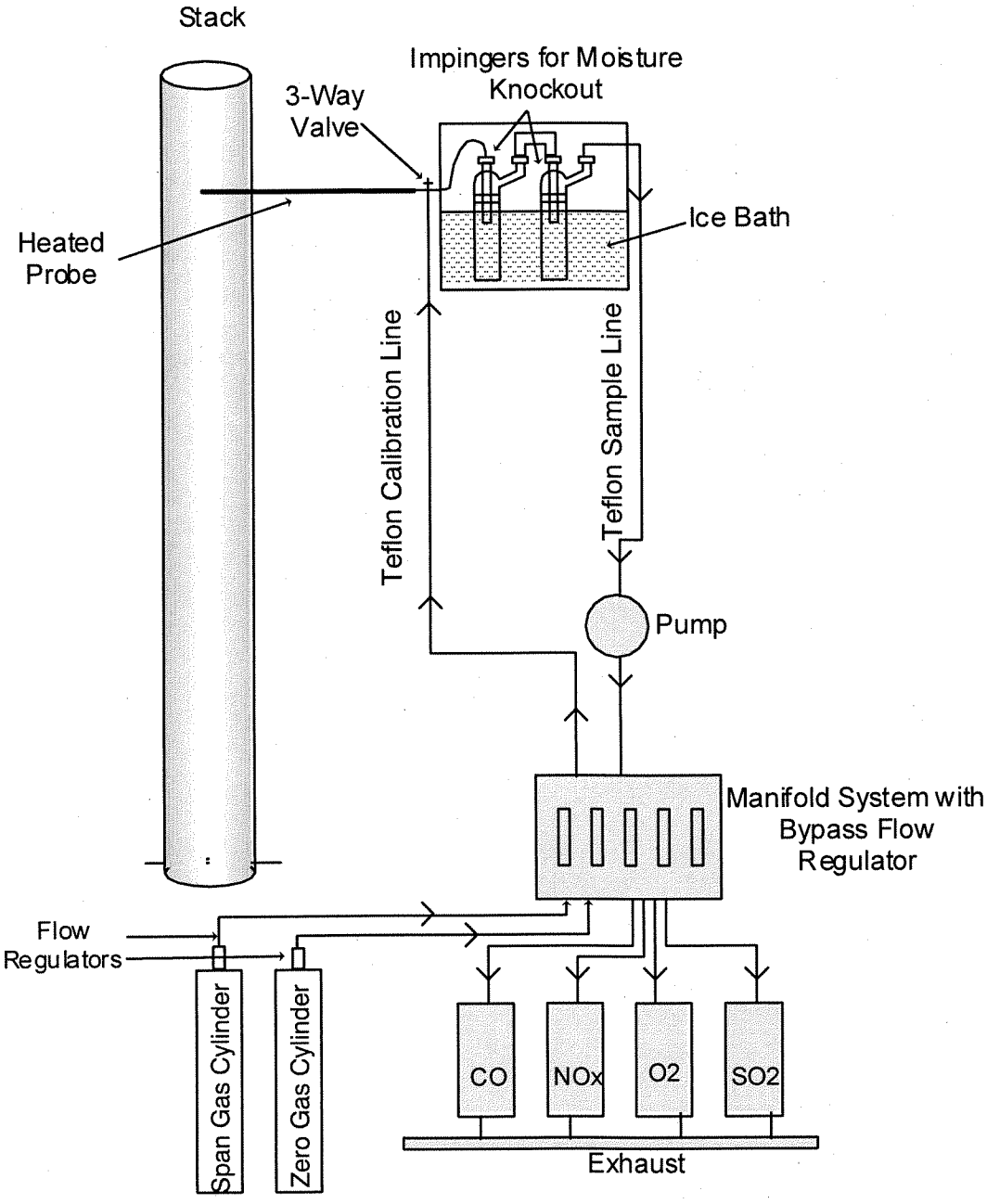

Reference Method Monitor Sampling System
(EPA Method 25A)

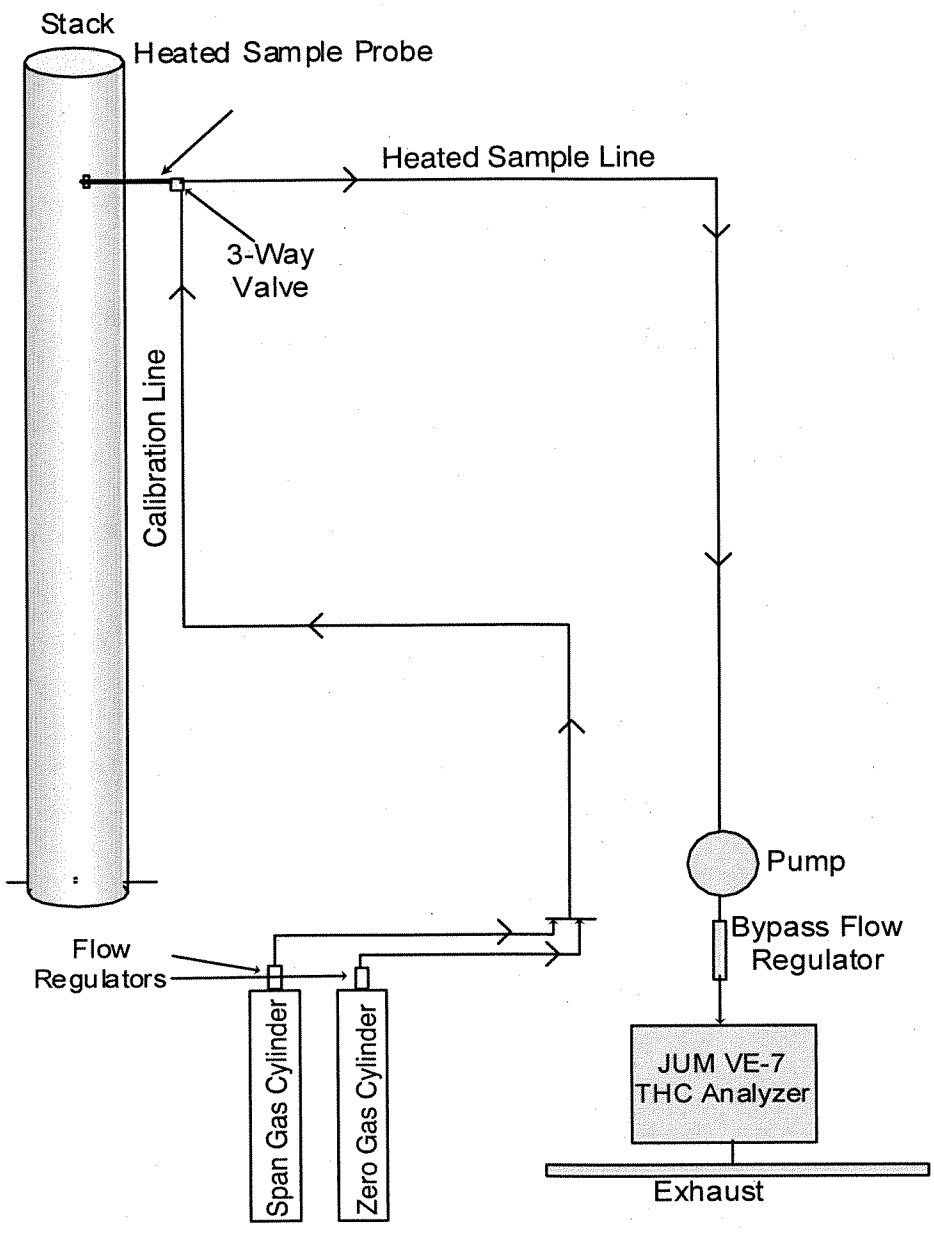

DESCRIPTION OF TESTS

Personnel from METCO Environmental arrived at the plant at 10:00 a.m. on Monday, April 13, 2009. After meeting with plant personnel, the equipment was moved onto the 1600 Thermal Oxidizer. The equipment was secured for the night and all work was completed at 5:00 p.m.

On Tuesday, April 14, work began at 7:15 a.m. The reference method monitors were calibrated and the equipment was prepared for testing. The NO_2 to NO conversion efficiency check was performed. The first set of tests for particulate matter, sulfur dioxide, oxides of nitrogen, carbon monoxide, and total hydrocarbons began at 12:00 p.m. Testing continued until the completion of the second set of tests at 4:43 p.m. The reference method monitors were calibrated and the equipment was secured for the night. The samples were recovered and all work was completed at 5:00 p.m.

On Wednesday, April 15, work began at 7:15 a.m. The reference method monitors were calibrated and the equipment was prepared for testing. The third set of tests for particulate matter, sulfur dioxide, oxides of nitrogen, carbon monoxide, and total hydrocarbons began at 9:00 a.m. and was completed at 10:41 a.m. The fourth test for sulfur dioxide began at 10:26 a.m. Testing continued until the completion of the ninth test at 5:37 p.m. The reference method monitors were calibrated and the equipment was secured for the night. The samples were recovered and all work was completed at 6:00 p.m.

On Thursday, April 16, work began at 7:15 a.m. The reference method monitors were calibrated and the equipment was prepared for testing. The tenth test for sulfur dioxide

began at 8:45 a.m. Testing continued until the completion of the twelfth test at 12:15 p.m.

The reference method monitors were calibrated and secured for transport. The equipment was moved off of the stack and loaded into the sampling van. The samples were recovered and transported to METCO Environmental's laboratory in Dallas, Texas, for further evaluation.

Testing at Valero Refining – New Orleans, L. L. C., St. Charles Refinery, 1600 Thermal Oxidizer, located in Norco, Louisiana, were completed at 1:00 p.m. on Thursday, April 16, 2009.

APPENDICES

A. Location of Sampling Points
B. Source Emissions Calculations
C. Calibration Data
D. Field Testing Data
E. Analytical Data
F. Reference Method Monitors Data
G. Plant Operational Data
H. Chain of Custody
I. Resumes of Test Personnel

APPENDIX A

Location of Velocity Sampling Points
1600 Thermal Oxidizer

The sampling ports are located 66 feet (7.94 stack diameters) downstream from a constriction in the stack and 9 feet 3 inches (1.11 stack diameters) upstream from a constriction in the stack. The locations of the sampling points were calculated as follows:

Port and Wall Thickness	=	11 1/2 inches
Inside Stack Diameter	=	99 3/4 inches

Point Number*	Percent of Diameter From Wall	Distance From Wall
1	2.1	2 1/8 "
2	6.7	6 11/16 "
3	11.8	11 3/4 "
4	17.7	17 5/8 "
5	25.0	24 15/16 "
6	35.6	35 1/2 "

* Calculated as half of a twelve point traverse

APPENDIX A

Location of Velocity Sampling Points

1600 Thermal Oxidizer

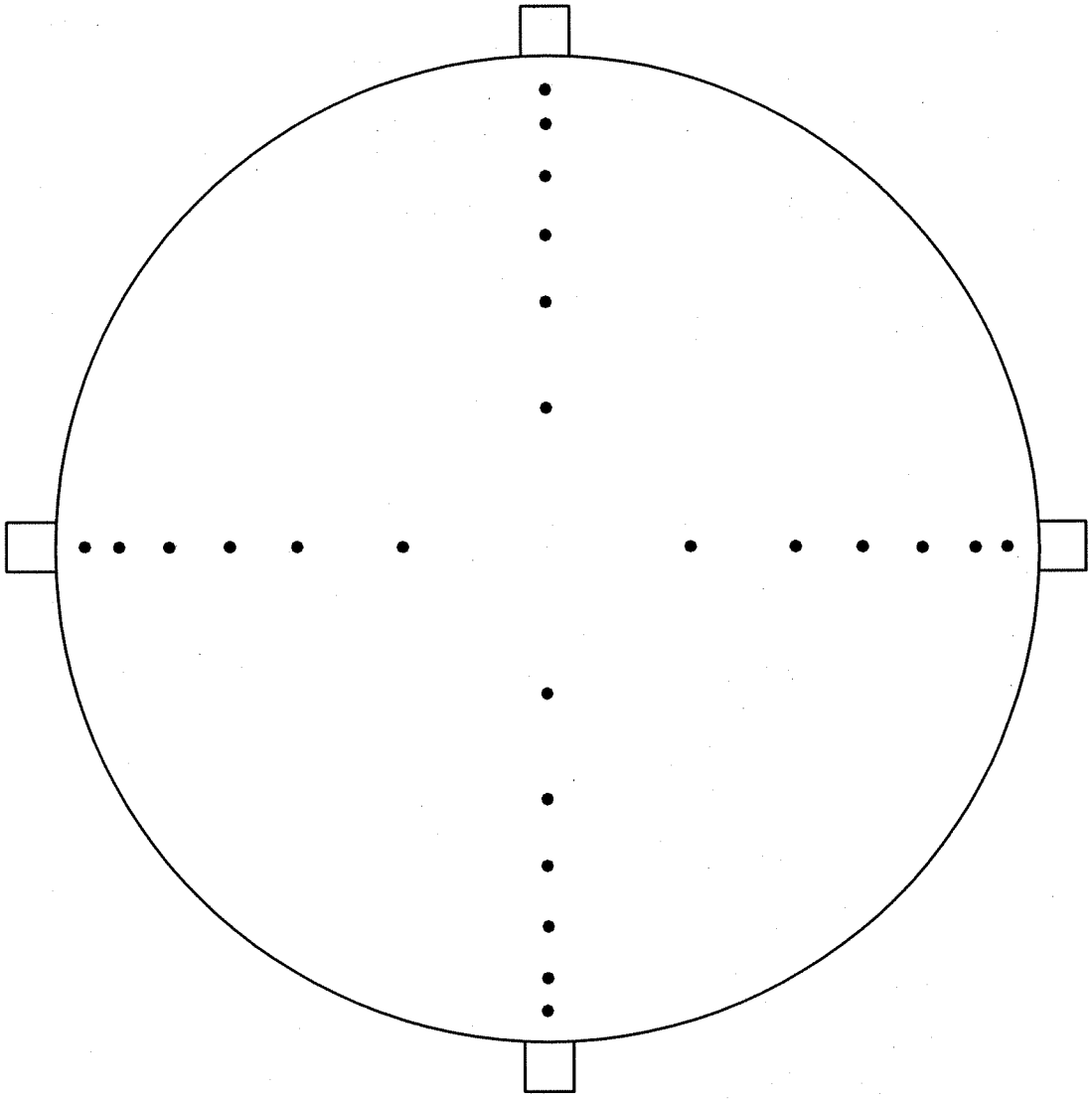

APPENDIX A

Location of Reference Method Monitor Sampling Points
1600 Thermal Oxidizer

The sampling ports are located 66 feet (7.94 stack diameters) downstream from a constriction in the stack and 9 feet 3 inches (1.11 stack diameters) upstream from a constriction in the stack. The locations of the sampling points were calculated as follows:

Port and Wall Thickness	=	11 1/2 inches
Inside Stack Diameter	=	99 3/4 inches

Point Number	Percent Distance From Wall	Distance From Wall
1	16.7	16 11/16"
2	50.0	49 7/8"
3	83.3	83 1/16"

APPENDIX A

Location of Reference Method Monitor Sampling Points

1600 Thermal Oxidizer

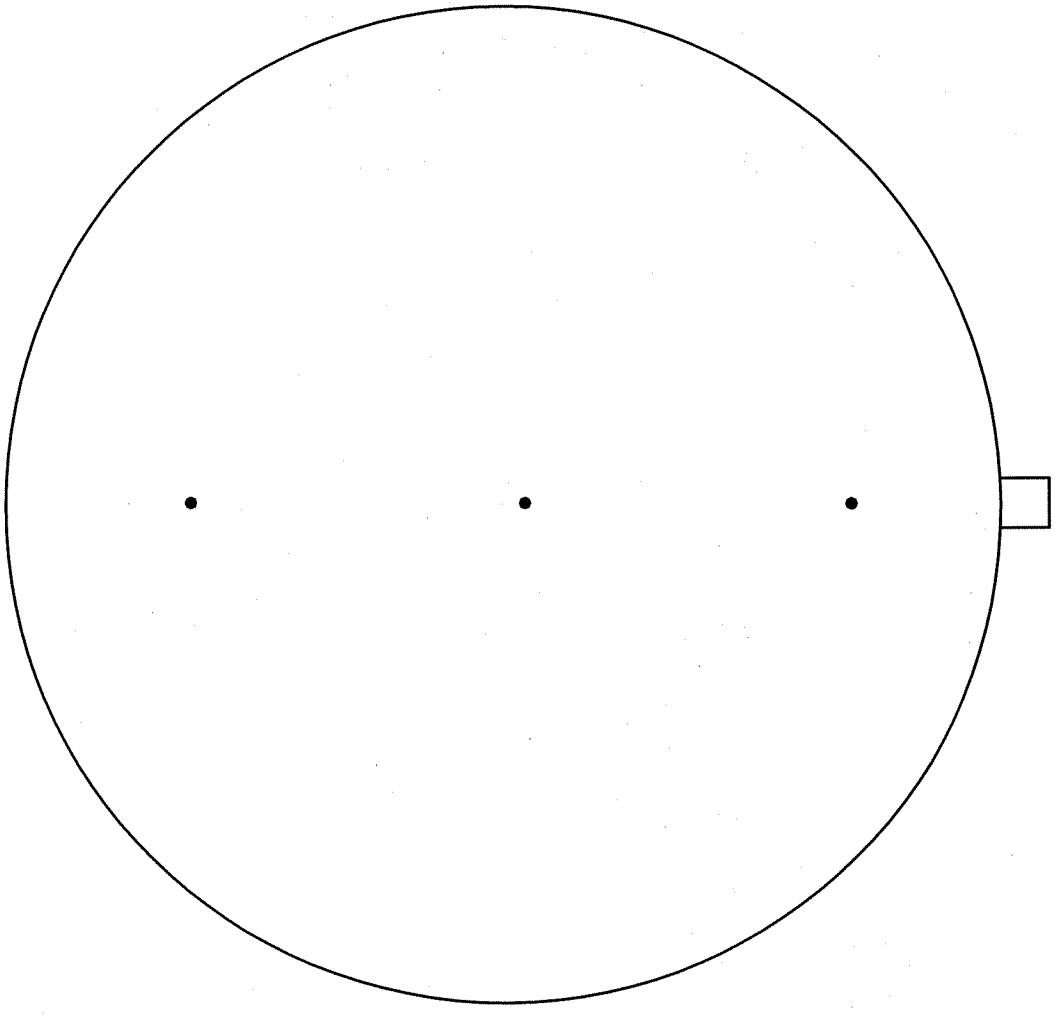

APPENDIX B

Nomenclature and Equations
for
Calculation of Source Emissions

NOMENCLATURE FOR PARTICULATE CALCULATIONS

Symbol	English Units	Metric Units	Description
A_s	$in.^2$	m^2	Stack Area
C_{an}	gr/dscf*	g/dscm*	Particulate - probe, cyclone, and filter
C_{ao}	gr/dscf*	g/dscm*	Particulate - total
C_{at}	gr/CF @ stack conditions	g/m^3	Particulate - probe, cyclone, and filter
C_{au}	gr/CF @ stack conditions	g/m^3	Particulate - total
C_{aw}	lbs/hr	kg/hr	Particulate - probe, cyclone, and filter
C_{ax}	lbs/hr	kg/hr	Particulate - total
C_p			Pitot Tube Calibration Factor
D_n	in.	m	Sampling Nozzle Diameter
%EA			Percent Excess Air at sampling point
g	32.174 ft/sec^2		Acceleration of Gravity
%I			Percent Isokinetic
%M			Percent Moisture in the stack gas by volume
M_d			Mole fraction of dry gas

* 29.92 " Hg, 68° F (760 mm Hg, 20° C)

09-177

Symbol	English Units	Metric Units	Description
m_f	mg	mg	Particulate - probe, cyclone, and filter
M_{water}	18 lb/lb-mole		Molecular Weight of water
m_t	mg	mg	Particulate - total
MW	lb/lb-mole	g/g-mole	Molecular Weight of stack gas
MW_{air}	28.96 lb/ lb-mole		Molecular Weight of air
MW_d	lb/lb-mole	g/g-mole	Molecular Weight of dry stack gas
P_b	"Hg Absolute	mm Hg	Barometric Pressure
P_m	"H_2O	mm H_2O	Orifice Pressure drop
P_s	"Hg Absolute	mm Hg	Stack Pressure
ΔP	"H_2O	mm H_2O	Velocity Head of stack gas
P_{std}	29.92 "Hg	760 mm Hg	Standard Barometric Pressure
Q_a	ACFM	m^3/hr	Stack Gas Volume at actual stack conditions
Q_s	DSCFM*	dscm/hr*	Stack Gas Volume at 29.92 "Hg, 528°R, dry
R	21.83 "Hg-ft^3/lb-mole°R		Universal Gas Constant
T_m	°F	°C	Average Gas Meter Temperature

* 29.92 " Hg, 68° F (760 mm Hg, 20° C)

Symbol	English Units	Metric Units	Description
T_t	min	min	Net time of test
T_s	°F	°C	Stack Temperature
T_{std}	528°R	293°K	Standard Temperature
V_m	ft^3	m^3	Volume of dry gas sampled @ meter conditions
Vm_{std}	dscf*	dscm*	Volume of dry gas sampled @ standard conditions
V_s	fpm	m/sec	Stack velocity @ stack conditions
V_w	ml	ml	Total water collected in impingers and silica gel
Vw_{gas}	scf*	scm*	Volume of water vapor collected @ standard conditions
ρ_{air}	0.0752 lbs/ft^3		Density of Air
ρ_{water}	1 g/ml		Density of Water
ρ_{man}	62.32 lbs/ft^3		Density of Manometer Oil

* 29.92 " Hg, 68° F (760 mm Hg, 20° C)

EXAMPLE CALCULATIONS

1. Volume of dry gas sampled at standard conditions. *

$$Vm_{std} = Vm \left(\frac{T_{std}}{T_m + 460} \right) \left[\frac{P_b + \frac{P_m}{13.6}}{P_{std}} \right]$$

$$Vm_{std} = 17.65\, Vm \left[\frac{P_b + \frac{P_m}{13.6}}{T_m + 460} \right] = dscf$$

$$Vm_{std} = dscf \times 0.028317 = dscm$$

2. Volume of water vapor collected at standard conditions. *

$$Vw_{gas} = \frac{(V_w - gms\ SO_2{}^{**})\, \rho_{water}\, R\, T_{std}}{P_{std}\, M_{water}\, 453.6}$$

$$Vw_{gas} = 0.0472\, (V_w - gms\ SO_2{}^{**}) = scf$$

$$Vw_{gas} = scf \times 0.028317 = scm$$

3. Percent moisture in stack gas.

$$\%M = \frac{Vw_{gas}}{Vm_{std} + Vw_{gas}} \times 100 = \%$$

* 29.92 " Hg, 68° F (760 mm Hg, 20° C)

** gms SO_2 subtracted only when SO_2 is collected in the sampling train being used to determine the volume of water vapor collected.

09-177

4. Mole fraction of dry gas.

$$M_d = \frac{100 - \%M}{100}$$

5. Average molecular weight of dry stack gas.

$$MW_d = \left[\%CO_2 \times \frac{44}{100}\right] + \left[\%O_2 \times \frac{32}{100}\right] + \left[\%N_2 \times \frac{28}{100}\right] + \left[\%CO \times \frac{28}{100}\right] = lb/lb\text{-}mole$$

$$= g/g\text{-}mole$$

6. Molecular weight of stack gas.

$$MW = MW_d \times M_d + 18\,(1 - M_d) = \frac{lb}{lb\text{-}mole} = g/g\text{-}mole$$

7. Percent excess air at sampling point.

$$\%EA = \frac{100\,[\%O_2 - (0.5\,\%CO)]}{0.265\,(\%N_2) - [\%O_2 - (0.5\,\%CO)]}$$

8. Stack Pressure.

$$P_s = P_b + \frac{Stack\ Pressure\ "H_2O}{13.6} = "Hg\ Absolute$$

$$P_s = "Hg\ Abs. \times 25.4 = mm\ Hg$$

9. Stack velocity at stack conditions.

$$V_s = C_p\, 60 \left[\frac{2g \times \rho_{man} \times P_{std} \times MW_{air} \times (T_s + 460)}{12 \times \rho_{air} \times P_s \times MW \times T_{std}} \right]^{1/2} \times \sqrt{\Delta P}\ average$$

$$V_s = 5{,}123.8\, C_p \left[\frac{(T_s + 460)}{P_s \times MW} \right]^{1/2} \sqrt{\Delta P}\ average = fpm$$

$$V_s = fpm \times 0.00508 = m/sec$$

10. Dry stack gas volume at standard conditions. *

$$Q_s = \frac{1}{144} V_s \times A_s \times M_d \times \frac{T_{std}}{T_s + 460} \times \frac{P_s}{P_{std}}$$

$$Q_s = \frac{0.123\, V_s \times A_s \times M_d \times P_s}{T_s + 460} = DSCFM$$

$$Q_s = DSCFM \times 1.6990 = dscm/hr$$

11. Actual stack gas volume at stack conditions.

$$Q_a = \frac{V_s \times A_s}{144} = ACFM$$

$$Q_a = ACFM \times 1.6990 = m^3/hr$$

* 29.92 " Hg, 68° F (760 mm Hg, 20° C)

12. Percent Isokinetic.

$$\%I = \frac{Vm_{std} \times (T_s + 460) \times P_{std} \times 100 \times 144\ in^2/ft^2}{M_d \times T_{std} \times P_s \times T_t \times V_s (\frac{\pi \times D_n^2}{4})}$$

$$\%I = \frac{1039 \times Vm_{std} \times (T_s + 460)}{M_d \times P_s \times T_t \times V_s \times D_n^2}$$

13. Particulate – probe, cyclone, and filter.

$$C_{an} = \frac{m_f}{Vm_{std}} \times \frac{1\ gr}{64.8\ mg}$$

$$C_{an} = 0.0154 \times \frac{m_f}{Vm_{std}} = gr/dscf\ *$$

$$C_{an} = gr/dscf \times 2.290 = g/dscm\ *$$

14. Particulate total.

$$C_{ao} = 0.0154 \times \frac{m_t}{Vm_{std}} = gr/dscf\ *$$

$$C_{ao} = gr/dscf \times 2.290 = g/dscm\ *$$

* 29.92 " Hg, 68° F (760 mm Hg, 20° C)

15. Particulate – probe, cyclone, and filter at stack conditions.

$$C_{at} = C_{an} \times \frac{P_s}{P_{std}} \times \frac{(T_{std})}{(T_s + 460)} \times M_d$$

$$C_{at} = \frac{17.65 \times C_{an} \times P_s \times M_d}{T_s + 460} = gr/CF$$

$$C_{at} = gr/CF \times 2.290 = g/m^3$$

16. Particulate – total, at stack conditions.

$$C_{au} = \frac{17.65 \times C_{ao} \times P_s \times M_d}{T_s + 460} = gr/CF$$

$$C_{au} = gr/CF \times 2.290 = g/m^3$$

17. Particulate – probe, cyclone, and filter.

$$C_{aw} = C_{an} \times Q_s \times \frac{60\ min}{1\ hr} \times \frac{1\ lb}{7000\ gr}$$

$$C_{aw} = 0.00857 \times C_{an} \times Q_s = lbs/hr$$

$$C_{aw} = lbs/hr \times 0.4536 = kg/hr$$

18. Particulate – total.

$$C_{ax} = 0.00857 \times C_{ao} \times Q_s = lbs/hr$$

$$C_{ax} = lbs/hr \times 0.4536 = kg/hr$$

EXAMPLE CALCULATIONS

lbs/hr = ppm x CF x 60 min/hr x DSCFM*

CF = Conversion Factor for ppm to lbs/scf*

Compound	Conversion Factor
NO_x	1.194×10^{-7}
CO	7.273×10^{-8}
SO_2	1.660×10^{-7}
THC as Propane	1.145×10^{-7}

* 29.92 "Hg, 68°F (760 mm Hg, 20°C)

$$\text{lbs/million Btu} = \frac{\text{lbs/hr}}{\text{Unit Heat Input million Btu/hr}}$$

EXAMPLE CALCULATIONS

$$E\ corr. = E\ meas. \times \frac{20.9\%\ O_2 - \%\ O_2\ corr.}{20.9\%\ O_2 - \%\ O_2\ meas.}$$

E corr. = Emission Rate corrected for Oxygen

E meas. = Emission Rate measured

% O_2 corr. = The Oxygen content to be corrected to (ie. 0.0% O_2)

% O_2 meas. = The Oxygen content measured

EXAMPLE CALCULATIONS

Equation 7E-5

$$C_{gas} = (\overline{C} - C_o)\ \frac{C_{ma}}{C_m - C_o}$$

Where: C_{gas} = Effluent gas concentration - dry basis (ppm)

$\overline{C}$ = Average gas concentration indicated by gas analyzer - dry basis (ppm)

C_o = Average of initial and final system calibration bias check responses for the zero gas (ppm)

C_m = Average of initial and final system calibration bias check responses for the upscale calibration gas (ppm)

C_{ma} = Actual concentration of the upscale calibration gas (ppm)

METCO ENVIRONMENTAL

SOURCE EMISSION SURVEY

JOB NUMBER: 09-177
JOB NAME: VALERO
LOCATION: NORCO, LOUISIANA
UNIT TESTED: 1600 THERMAL OXIDIZER

SOURCE EMISSION CALCULATIONS

			RUN NUMBER		
SYMBOL	DESCRIPTION	UNITS	1	2	3
DATE			04/14/09	04/14/09	04/15/09
BEGIN TIME			1200	1450	0900
END TIME			1411	1643	1041
P(b)	BAROMETRIC PRESSURE	"Hg Abs.	30.06	30.02	30.12
		(mm Hg)	(764.00)	(763.00)	(765.00)
P(m)	ORIFICE PRESSURE DROP	"H2O	1.140	1.096	1.114
		(mm H2O)	(29.000)	(27.800)	(28.300)
	DGM CALIBRATION FACTOR		1.004	1.004	1.004
V(m)	VOLUME DRY GAS SAMPLED	ft.^3	41.379	41.676	43.671
	@ METER CONDITIONS	(m^3)	(1.172)	(1.180)	(1.237)
	LEAK CHECK VOLUME	ft.^3	0.378	0.706	1.497
T(m)	AVERAGE GAS METER	DEG.F	72	79	90
	TEMPERATURE	(DEG.C)	(22)	(26)	(32)
V(m[std])*	VOLUME DRY GAS SAMPLED	DSCF	41.382	41.079	42.326
	@ STANDARD CONDITIONS*	(DSCM)	(1.172)	(1.163)	(1.199)
V(w)	TOTAL WATER COLLECTED,	ml	76.1	75.2	78.9
	IMPINGERS & SILICA GEL				
V(w[gas])	VOLUME WATER VAPOR	SCF	3.592	3.549	3.724
	COLLECTED @ STANDARD	(SCM)	(0.102)	(0.100)	(0.105)
	CONDITIONS*				
%M	MOISTURE IN STACK GAS	%	7.99	7.95	8.09
	BY VOLUME				
Md	MOL FRACTION OF DRY GAS		0.9201	0.9205	0.9191
Tt	NET TIME OF TEST	MINUTES	72	72	72

* 68 Deg.F, 29.92 "Hg (20 Deg.C, 760 mm Hg)

SOURCE EMISSION CALCULATIONS

JOB NUMBER: 09-177
JOB NAME: VALERO
LOCATION: NORCO, LOUISIANA
UNIT TESTED: 1600 THERMAL OXIDIZER

			RUN NUMBER		
SYMBOL	DESCRIPTION	UNITS	1	2	3
CO2		%	3.7	3.6	3.5
O2		%	12.1	11.6	11.5
CO		%	0.0	0.0	0.0
N2		%	84.2	84.8	85.0
%EA	EXCESS AIR @ SAMPLING POINT	%	118.5	106.7	104.3
MWd	MOLECULAR WEIGHT OF DRY STACK GAS	LB/LB-MOLE (g/g-MOLE)	29.08 (29.08)	29.04 (29.04)	29.02 (29.02)
MW	MOLECULAR WEIGHT OF STACK GAS	LB/LB-MOLE (g/g-MOLE)	28.19 (28.19)	28.16 (28.16)	28.13 (28.13)
Cp	PITOT TUBE CALIBRATION		0.811	0.811	0.811
DELTA P	VELOCITY HEAD OF STACK GAS	"H2O (mm H20)	0.052 (1.300)	0.050 (1.300)	0.051 (1.300)
DELTA P ^(1/2)		"H2O	0.228	0.223	0.225
Ts	STACK TEMPERATURE	DEG. F (DEG. C)	1,139 (615)	1,131 (611)	1,127 (608)
Ps	STACK PRESSURE	"Hg Abs. (mm Hg) "H20	30.01 (762.00) -0.70	29.97 (761.00) -0.70	30.06 (764.00) -0.80
Vs	STACK VELOCITY @ STACK CONDITIONS	FPM (m/SEC.)	1,303 (7)	1,272 (6)	1,281 (7)
As	STACK AREA	(SQ.INCHES) (SQ.METERS)	7,815 (5)	7,815 (5)	7,815 (5)
Qs	DRY STACK GAS VOLUME @ STANDARD CONDITIONS* WET STACK GAS VOLUME @ STANDARD CONDITIONS*	DSCFM (DSCM/HR) WSCFH	21,629 (36,748) 1,410,434	21,201 (36,020) 1,381,923	21,437 (36,421) 1,399,434
Qa	ACTUAL STACK GAS VOLUME @ STACK CONDITIONS	ACFM (m^3/HR)	70,690 (120,102)	69,049 (117,314)	69,514 (118,104)
Dn	SAMPLING NOZZLE DIAM.	IN. (m)	0.525 (0.013)	0.525 (0.013)	0.525 (0.013)
%I	PERCENT ISOKINETIC	%	96.3	97.5	99.4

* 68 Deg.F, 29.92 "Hg (20 Deg.C, 760 mm Hg)

SOURCE EMISSION CALCULATIONS

JOB NUMBER: 09-177
JOB NAME: VALERO
LOCATION: NORCO, LOUISIANA
UNIT TESTED: 1600 THERMAL OXIDIZER

SYMBOL	DESCRIPTION	UNITS	RUN NUMBER 1	2	3
Mf	PARTICULATE - PROBE, CYCLONE AND FILTER	mg	12.3	17.8	12.0
Mt	PARTICULATE - TOTAL	mg	----	----	----
Can	PARTICULATE - PROBE, CYCLONE AND FILTER	gr/DSCF* (g/DSCM)	0.0046 (0.0105)	0.0067 (0.0153)	0.0044 (0.0100)
Cao	PARTICULATE - TOTAL	gr/DSCF* (g/DSCM)	---- ----	---- ----	---- ----
Cat	PARTIC.-PROBE, CYCLONE AND FILTER @ STACK COND.	gr/CF (g/m3)	0.0014 (0.0032)	0.0020 (0.0046)	0.0013 (0.0030)
Cau	PARTICULATE - TOTAL @ STACK CONDITIONS	gr/CF (g/m3)	---- ----	---- ----	---- ----
Caw	PARTICULATE - PROBE, CYCLONE AND FILTER	LBS/HR (Kg/HR)	0.85 (0.38)	1.21 (0.55)	0.80 (0.36)
Cax	PARTICULATE - TOTAL	LBS/HR (Kg/HR)	---- ----	---- ----	---- ----

* 68 Deg.F, 29.92 "Hg (20 Deg.C, 760 mm Hg)

APPENDIX C

Calibration Data

Equipment	Calibration Factor	Calibration Date
Pitot Tube #ACP 7	0.811	04/10/09
Probe Tip # 09-177-1	0.525	04/14/09
Dry Gas Meter #43-3	1.004	03/12/09
Stack Unit Orifice #43-3		03/12/09
Digital Temperature Indicator #43-3		03/12/09
Barometer #43-1		01/26/09

METCO ENVIRONMENTAL

Pitot Tube Calibration

Date: 4/10/09 Time: 0900

Pitot No: ACP-7 T_s: 70

Pitot Dimensions: 3/8" x 8' C_{pstd}: 0.990

Pitot Inspections

Pitot tips level and perpendicular YES / NO

Pitot tips free from obstruction YES / NO

Pitot tips damaged YES / NO

Motor Setting	fps mark	Calibration Standard Start	Calibration Standard End	$\sqrt{\text{Standard Average}}$	High	$\sqrt{\text{High}}$	Cal. Factor	Low	$\sqrt{\text{Low}}$	Cal. Factor
7	20	0.10	0.10	0.316	0.15	0.387	0.808	0.15	0.387	0.808
14	30	0.22	0.22	0.469	0.33	0.574	0.808	0.32	0.566	0.821
20	40	0.34	0.34	0.583	0.50	0.707	0.816	0.50	0.707	0.816
28	50	0.54	0.54	0.735	0.81	0.900	0.808	0.81	0.900	0.808
35	60	0.80	0.80	0.894	1.20	1.095	0.808	1.20	1.095	0.808
41	70	1.00	1.00	1.000	1.45	1.204	0.822	1.50	1.225	0.808
50	80	1.30	1.30	1.140	1.95	1.396	0.808	1.95	1.396	0.808
62	90	1.60	1.60	1.265	2.40	1.549	0.808	2.40	1.549	0.808
28*	**50***	0.54	0.54	0.735	0.81	0.900	0.808	0.81	0.900	0.808
28*	**50***	0.54	0.54	0.735	0.81	0.900	0.808	0.81	0.900	0.808
Average							0.811			0.811

***not included in average**

$$C_p = C_{pstd}\left(\frac{\sqrt{\Delta P_{std}}}{\sqrt{\Delta P}}\right)$$

Summary of Results:

Normal high side calibration factor 0.811

variation + 1.36 variation - 0.37

Normal low side calibration factor 0.811

variation + 1.23 variation - 0.37

Calibrator: Jason D. Pilg

Office: Baton Rouge

QA/QC Check

Completeness ✓ Legibility ✓ Accuracy ✓ Specifications ✓ Reasonableness ✓

Checked by: David Moore

09-177

Version 2
12 March 2008

MITECO ENVIRONMENTAL

NOZZLE CALIBRATION

Nozzle Set No. 09-177

Date 4-14-09 Calibrator: David Moore

	1	2	3	4	5	6
Reading 1	0.525					
Reading 2	0.525					
Reading 3	0.524					
Reading 4	0.525					
Reading 5	0.525					
Reading 6	0.526					
Reading 7	0.525					
Reading 8	0.525					
Reading 9	0.525					
Reading 10	0.525					
Average	0.525					

	7	8	9	10	11	12
Reading 1						
Reading 2						
Reading 3						
Reading 4						
Reading 5						
Reading 6						
Reading 7						
Reading 8						
Reading 9						
Reading 10						
Average						

METCO ENVIRONMENTAL

Dry Gas Meter Calibration

Dry Gas Meter Number 43-3

Date: 3-12-09

ΔH ("H_2O)	C_{dg}
0.50	1.008
1.00	1.003
1.50	1.000
2.00	1.009
3.00	1.001
4.00	1.004
Average	1.004 ~

Variation: + 0.90 %

- 1.00 %

Adjustment Required: Yes_____ No ✓

Calibrator: Daniel Moore

Office: Baton Rouge

QA/QC Check

Completeness ✓ Legibility ✓ Accuracy ✓ Specifications ✓ Reasonableness ✓

Checked by: Jeremiah Johnson/hs

METCO ENVIRONMENTAL

DRY GAS METER CALIBRATION

Meter Number: 43-3

Wet Test Meter No : #7

Date: 03-12-09

Calibrator: David Moore

$$\text{Wet Test Meter } VM_{std} = 17.65 \times V_m \frac{P_b + \frac{P_m}{13.6}}{T_m + 460} \times C_f = 5.430 \text{ scfm}$$

$$\text{Dry Test Meter } VM_{std} = 17.65 \times V_m \frac{P_b + \frac{P_m}{13.6}}{T_m + 460} = 5.385 \text{ scfm}$$

Run No: 1 @ 0.50 "H_2O

P_b: 30.30 "Hg

Wet Test Meter C_f: 0.999

Control Module Vacuum: ~~0.5~~ 5.0 "Hg

	Wet Test Meter				Dry Gas Meter			
	Time	Meter Reading	T_m	P_m	Mete Reading	T_m Inlet	T_m Outlet	P_m
End	0938	5.410	70 °F	-1.80 "H_2O	514.350	71 °F	78 °F	0.50 "H_2O
Start	0925	0.000	70 °F	-1.80 "H_2O	508.969	71 °F	78 °F	0.50 "H_2O
	13	5.410 ✓ cf^{Δ}	70 °F_{avg}	-1.80 "H_2O_{avg}	5.381 ✓ cf^{Δ}	75 ✓ °F_{avg}		0.50 "H_2O_{avg}

$cf^{\Delta} = V_m$ 5.410

$$\text{Wet Test Meter } VM_{std} = 17.65 \times 5.410 \frac{30.30 + \frac{-1.80}{13.6}}{70 + 460} \times 0.999 \; C_f = 5.430 \checkmark \text{ scfm}$$

$$\text{Dry Gas Meter } VM_{std} = 17.65 \times 5.381 \frac{30.30 + \frac{0.50}{13.6}}{75 + 460} = 5.385 \checkmark \text{ scfm}$$

$$\text{Calibration Factor } (C_{dg}) = \frac{\text{Wet Test Meter } VM_{std}}{\text{Dry Gas Meter } VM_{std}} \qquad C_{dg} = \frac{5.430}{5.385} = 1.008 \checkmark$$

QA/QC Check
Completeness ✓ Legibility ✓ Accuracy ✓ Specifications ✓ Reasonableness —

Checked by: [signature]

METCO ENVIRONMENTAL

DRY GAS METER CALIBRATION

Meter Number: 43-3 Wet Test Meter No : #7

Date: 03-12-09 Calibrator: David Moore

$$\text{Wet Test Meter } VM_{std} = 17.65 \times V_m \frac{P_b + \frac{P_m}{13.6}}{T_m + 460} \times C_f = 5.527 \text{ scfm}$$

$$\text{Dry Test Meter } VM_{std} = 17.65 \times V_m \frac{P_b + \frac{P_m}{13.6}}{T_m + 460} = 5.510 \text{ scfm}$$

Run No: 1 @ 1.00 "H_2O P_b: 30.30 "Hg

Wet Test Meter C_f: 0.999 Control Module Vacuum: 5.0 "Hg

	Wet Test Meter						Dry Gas Meter					
	Time	Meter Reading		T_m	P_m		Mete Reading		T_m Inlet	T_m Outlet	P_m	
End	0954	5.519		70 °F	-2.70	"H_2O	522.572		72 °F	82 °F	1.00	"H_2O
Start	0945	0.000		70 °F	-2.70	"H_2O	517.052		72 °F	80 °F	1.00	"H_2O
	9		cf^{Δ}	70 $°F_{avg}$	-2.70	"H_2O_{avg}	5.520	cf^{Δ}		77 $°F_{avg}$	1.00	"H_2O_{avg}

$cf^{\Delta} = V_m$ 5.519

$$\text{Wet Test Meter } VM_{std} = 17.65 \times 5.519 \frac{30.30 + \frac{-2.70}{13.6}}{70 + 460} \times 0.999 \; C_f = 5.527 \text{ scfm}$$

$$\text{Dry Gas Meter } VM_{std} = 17.65 \times 5.520 \frac{30.30 + \frac{1.00}{13.6}}{77 + 460} = \frac{\cancel{5.510}}{5.511} \text{ scfm}$$

$$\text{Calibration Factor } (C_{dg}) = \frac{\text{Wet Test Meter } VM_{std}}{\text{Dry Gas Meter } VM_{std}} \quad C_{dg} = \frac{5.527}{\cancel{5.510}\ 5.511} = 1.003$$

3/24/09

QA/QC Check

Completeness ✓ Legibility ✓ Accuracy ✓ Specifications ✓ Reasonableness ✓

Checked by: Ned Snapp

METCO ENVIRONMENTAL

DRY GAS METER CALIBRATION

Meter Number: 43-3

Wet Test Meter No : #7

Date: 03-12-09

Calibrator: David Moon

$$\text{Wet Test Meter } VM_{std} = 17.65 \times V_m \frac{P_b + \frac{P_m}{13.6}}{T_m + 460} \times C_f = 10.675 \text{ scfm}$$

$$\text{Dry Test Meter } VM_{std} = 17.65 \times V_m \frac{P_b + \frac{P_m}{13.6}}{T_m + 460} = 10.674 \text{ scfm}$$

Run No: 1 @ 1.50 "H_2O

P_b: 30.30 "Hg

Wet Test Meter C_f: 0.999

Control Module Vacuum: 5.0 "Hg

	Wet Test Meter				Dry Gas Meter			
	Time	Meter Reading	T_m	P_m	Mete Reading	T_m Inlet	T_m Outlet	P_m
End	1015	10.701	71 °F	-3.50 "H_2O	535.736	72 °F	87 °F	1.50 "H_2O
Start	1000	0.000	71 °F	-3.50 "H_2O	525.037	73 °F	81 °F	1.50 "H_2O
	15	cf^{Δ}	71 $°F_{avg}$	-3.50 "H_2O_{avg}	10.699 cf^{Δ}		78 $°F_{avg}$	1.50 "H_2O_{avg}

$cf^{\Delta} = V_m$ 10.701

$$\text{Wet Test Meter } VM_{std} = 17.65 \times 10.701 \frac{30.30 + \frac{-3.50}{13.6}}{71 + 460} \times 0.999 \; C_f = 10.675 \text{ scfm}$$

$$\text{Dry Gas Meter } VM_{std} = 17.65 \times 10.699 \frac{30.30 + \frac{1.50}{13.6}}{78 + 460} = 10.674 \text{ scfm}$$

$$\text{Calibration Factor } (C_{dg}) = \frac{\text{Wet Test Meter } VM_{std}}{\text{Dry Gas Meter } VM_{std}} \qquad C_{dg} = \frac{10.675}{10.674} = 1.000$$

QA/QC Check
Completeness ✓ Legibility ✓ Accuracy ✓ Specifications ✓ Reasonableness ✓

Checked by: [signature]

METCO ENVIRONMENTAL

DRY GAS METER CALIBRATION

Meter Number: 43-3 Wet Test Meter No : #7

Date: 03-12-09 Calibrator: David Moore

$$\text{Wet Test Meter } VM_{std} = 17.65 \times V_m \frac{P_b + \frac{P_m}{13.6}}{T_m + 460} \times C_f = 10.776 \text{ scfm}$$

$$\text{Dry Test Meter } VM_{std} = 17.65 \times V_m \frac{P_b + \frac{P_m}{13.6}}{T_m + 460} = 10.685 \text{ scfm}$$

Run No: 1 @ 2.00 "H_2O P_b: 30.30 "Hg

Wet Test Meter C_f: 0.999 Control Module Vacuum: 5.0 "Hg

	Wet Test Meter				Dry Gas Meter			
	Time	Meter Reading	T_m	P_m	Mete Reading	T_m Inlet	T_m Outlet	P_m
End	1036	10.828	71 °F	-4.50 "H_2O	551.084	73 °F	90 °F	2.00 "H_2O
Start	1023	0.000	71 °F	-4.50 "H_2O	540.~~227~~ 327	73 °F	86 °F	2.00 "H_2O
		cf^{Δ}	71 °F_{avg}	-4.50 "H_2O_{avg}	10.757 cf^{Δ}		81 °F_{avg}	2.00 "H_2O_{avg}

$cf^{\Delta} = V_m$ 10.828

$$\text{Wet Test Meter } VM_{std} = 17.65 \times 10.828 \frac{30.30 + \frac{-4.50}{13.6}}{71 + 460} \times 0.999 \; C_f = 10.776 \text{ scfm}$$

$$\text{Dry Gas Meter } VM_{std} = 17.65 \times 10.757 \frac{30.30 + \frac{2.00}{13.6}}{81 + 460} = 10.685 \text{ scfm}$$

$$\text{Calibration Factor } (C_{dg}) = \frac{\text{Wet Test Meter } VM_{std}}{\text{Dry Gas Meter } VM_{std}} \quad C_{dg} = \frac{10.776}{10.685} = 1.009$$

QA/QC Check
Completeness ✓ Legibility ✓ Accuracy ✓ Specifications ✓ Reasonableness ✓

Checked by: [signature]

METCO ENVIRONMENTAL

DRY GAS METER CALIBRATION

Meter Number: 43-3

Wet Test Meter No : #7

Date: 03-12-09

Calibrator: David Moore

$$\text{Wet Test Meter } VM_{std} = 17.65 \times V_m \frac{P_b + \frac{P_m}{13.6}}{T_m + 460} \times C_f = 10.929 \text{ scfm}$$

$$\text{Dry Test Meter } VM_{std} = 17.65 \times V_m \frac{P_b + \frac{P_m}{13.6}}{T_m + 460} = 10.916 \text{ scfm}$$

Run No: 1 @ 3.00 "H_2O

P_b: 30.30 "Hg

Wet Test Meter C_f: 0.999

Control Module Vacuum: 5.0 "Hg

	Wet Test Meter					Dry Gas Meter				
	Time	Meter Reading		T_m	P_m	Mete Reading	T_m Inlet	T_m Outlet		P_m
End	1052	11.031		71 °F	-6.30 "H_2O	565.920	73 °F	93 °F		3.00 "H_2O
Start	1042	0.000		71 °F	-6.30 "H_2O	554.937	73 °F	88 °F		3.00 "H_2O
	10		cf^{Δ}	71 °F_{avg}	-6.30 "H_2O_{avg}	10.983 cf^{Δ}		82 °F_{avg}		3.00 "H_2O_{avg}

$cf^{\Delta} = V_m$ 11.031

$$\text{Wet Test Meter } VM_{std} = 17.65 \times 11.031 \frac{30.30 + \frac{-6.30}{13.6}}{71 + 460} \times 0.999 \; C_f = 10.929 \text{ scfm}$$

$$\text{Dry Gas Meter } VM_{std} = 17.65 \times 10.983 \frac{30.30 + \frac{3.00}{13.6}}{82 + 460} = 10.916 \text{ scfm}$$

$$\text{Calibration Factor } (C_{dg}) = \frac{\text{Wet Test Meter } VM_{std}}{\text{Dry Gas Meter } VM_{std}} \qquad C_{dg} = \frac{10.929}{10.916} = 1.001$$

QA/QC Check
Completeness ✓ Legibility ✓ Accuracy ✓ Specifications ✓ Reasonableness ✓

Checked by: [signature]

METCO ENVIRONMENTAL

DRY GAS METER CALIBRATION

Meter Number: 43-3

Wet Test Meter No : #7

Date: 03-12-09

Calibrator: David Moore

$$\text{Wet Test Meter } VM_{std} = 17.65 \times V_m \frac{P_b + \frac{P_m}{13.6}}{T_m + 460} \times C_f = 11.039 \text{ scfm}$$

$$\text{Dry Test Meter } VM_{std} = 17.65 \times V_m \frac{P_b + \frac{P_m}{13.6}}{T_m + 460} = 10.992 \text{ scfm}$$

Run No: 1 @ 4.00 "H_2O

P_b: 30.30 "Hg

Wet Test Meter C_f: 0.999

Control Module Vacuum: 5.0 "Hg

	Wet Test Meter				Dry Gas Meter			
	Time	Meter Reading	T_m	P_m	Mete Reading	T_m Inlet	T_m Outlet	P_m
End	1105	11.189	71 °F	-8.00 "H_2O	577.795	74 °F	95 °F	4.00 "H_2O
Start	1056	0.000	71 °F	-8.00 "H_2O	566.742	75 °F	89 °F	4.00 "H_2O
	9	11.189 cf^{Δ}	71 $°F_{avg}$	-8.00 "H_2O_{avg}	11.053 cf^{Δ}	83 $°F_{avg}$		4.00 "H_2O_{avg}

$cf^{\Delta} = V_m$

$$\text{Wet Test Meter } VM_{std} = 17.65 \times 11.189 \frac{30.30 + \frac{-8.00}{13.6}}{71 + 460} \times 0.999 \; C_f = 11.039 \text{ scfm}$$

$$\text{Dry Gas Meter } VM_{std} = 17.65 \times 11.053 \frac{30.30 + \frac{4.00}{13.6}}{83 + 460} = 10.992 \text{ scfm}$$

$$\text{Calibration Factor } (C_{dg}) = \frac{\text{Wet Test Meter } VM_{std}}{\text{Dry Gas Meter } VM_{std}} \qquad C_{dg} = \frac{11.039}{10.992} = 1.004$$

QA/QC Check
Completeness ✓ Legibility ✓ Accuracy ✓ Specifications ✓ Reasonableness ✓

Checked by: [signature]

STACK UNIT ORIFICE NO: 43-3 DATE: 03/12/09 CALIBRATED BY: C. Centorbi CHECKED BY: D. Moore

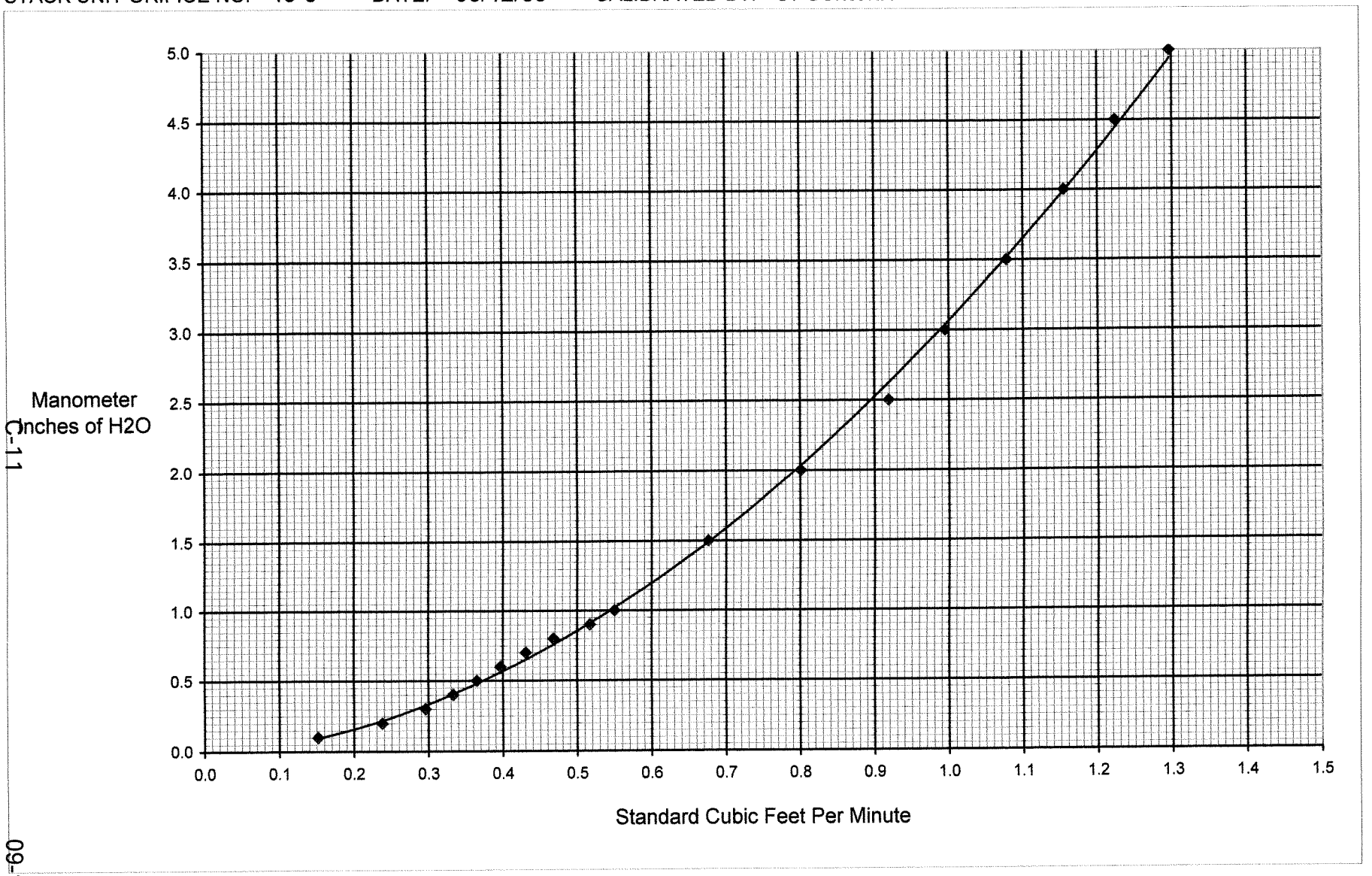

METCO ENVIRONMENTAL

Digital Temperature Indicator No. 43-3

Calibration Data

Date: 3-12-09

Reference Thermometer No. BR-09-2

Media	Time	Reference Thermometer (°F)	DTI (°F)
Ambient Air	0815	70	70
Ice Bath	0817	32	33
Boiling Water	0826	212	212
Oven	0831	250	251
Oven	0840	300	300
Oven	0848	350	351
Oven	0854	375	375

Meter Adjusted? YES _____ NO ✓

Calibrator David Moore

Office: Baton Rouge

QA/QC Check
Completeness ✓ Legibility ✓ Accuracy ✓ Specifications ✓ Reasonableness ✓

Checked by: [signature]

METCO ENVIRONMENTAL

BAROMETER CALIBRATION

Baton Rouge Office Only

Barometer No. 43-1

Date: 1-26-09

Time: 10:08

Barometric Pressure@ **Baton Rouge Airport**@ 70 ft.	=	30.28
	-	0.070
Absolute Pressure @ **Baton Rouge Airport**	=	30.21
	+	0.044
Absolute Pressure @**METCO Baton Rouge**@ 26 ft	=	30.25
Barometer Reading	=	31.28
Variation	=	1.03

Barometer Adjusted? Yes ✓ No ____

Calibrator David Moon

QA/QC Check
Completeness ✓ Legibility ✓ Accuracy ✓ Specifications ✓ Reasonableness ✓

Checked by: Ned Shepley

AIR LIQUIDE™ Scott Specialty Gases
Air Liquide America Specialty Gases LLC

RATA CLASS

Dual-Analyzed Calibration Standard

9810 BAY AREA BLVD, PASADENA, TX 77507 Phone: 281-474-5800 Fax: 281-474-5857

CERTIFICATE OF ACCURACY: EPA Protocol Gas

Assay Laboratory

SCOTT SPECIALTY GASES
9810 BAY AREA BLVD
PASADENA, TX 77507

P.O. No.: 2265187
Project No.: 04-67489-001

Customer

METCO ENVIRONMENTAL

3226 COMMANDER DR
CARROLLTON TX 75006

ANALYTICAL INFORMATION

This certification was performed according to EPA Traceability Protocol For Assay & Certification of Gaseous Calibration Standards; Procedure G-1; September, 1997.

Cylinder Number: ALM028529 **Certification Date:** 20Sep2008 **Exp. Date:** 20Sep2010
Cylinder Pressure*:** 1950 PSIG

COMPONENT	CERTIFIED CONCENTRATION (Moles)		ANALYTICAL ACCURACY**	TRACEABILITY
NITRIC OXIDE	46.8	PPM	+/- 1%	Direct NIST and NMi
NITROGEN - OXYGEN FREE		BALANCE		
TOTAL OXIDES OF NITROGEN	47.0	PPM		Reference Value Only

*** Do not use when cylinder pressure is below 150 psig.
** Analytical accuracy is based on the requirements of EPA Protocol Procedure G1, September 1997.

REFERENCE STANDARD

TYPE/SRM NO.	EXPIRATION DATE	CYLINDER NUMBER	CONCENTRATION	COMPONENT
NTRM 2629	15Aug2009	KAL003015	19.83 PPM	NITRIC OXIDE

INSTRUMENTATION

INSTRUMENT/MODEL/SERIAL#	DATE LAST CALIBRATED	ANALYTICAL PRINCIPLE
NOX ANALYZER/400-CLD/7M07001	19Sep2008	CHEMI

ANALYZER READINGS

(Z=Zero Gas R=Reference Gas T=Test Gas r=Correlation Coefficient)

NITRIC OXIDE

First Triad Analysis

Date: 10Sep2008 Response Unit:PPM

Z1=0.00000	R1=19.81000	T1=46.71000
R2=19.89000	Z2=0.00000	T2=46.98000
Z3=0.00000	T3=46.94000	R3=19.82000

Avg. Concentration: 46.84 PPM

Second Triad Analysis

Date: 20Sep2008 Response Unit: PPM

Z1=0.00000	R1=20.10000	T1=47.20000
R2=20.08000	Z2=0.00000	T2=47.40000
Z3=0.00000	T3=47.40000	R3=20.05000

Avg. Concentration: 46.73 PPM

Calibration Curve

Concentration=A+Bx+Cx2+Dx3+Ex4
r=0.999998
Constants: A=0.001244392
B=0.996655544 C=
D= E=

Special Notes: FOLIO ITEM #0810

APPROVED BY: D Kelly
DAVID KELLY

C-14

09-177

AIR LIQUIDE Air Liquide America Specialty Gases LLC SCOTT™

RATA CLASS

Dual-Analyzed Calibration Standard

1290 COMBERMERE STREET, TROY, MI 48083 Phone: 248-589-2950 Fax: 248-589-2134

CERTIFICATE OF ACCURACY: EPA Protocol Gas

Assay Laboratory

AIR LIQUIDE AMERICA SPECIALTY GASES LLC
1290 COMBERMERE STREET
TROY, MI 48083

P.O. No.: 2284521
Project No.: 05-72194-005

Customer

TESTAMERICA AIR EMISSIONS DALLAS
PO# 2284521
3226 COMMANDER DR.
CARROLLTON TX 75006

ANALYTICAL INFORMATION

This certification was performed according to EPA Traceability Protocol For Assay & Certification of Gaseous Calibration Standards; Procedure G-1; September, 1997.

Cylinder Number: BLM001483 **Certification Date:** 13Jan2009 **Exp. Date:** 13Jan2011
Cylinder Pressure*:** 1958 PSIG

COMPONENT	CERTIFIED CONCENTRATION (Moles)		ANALYTICAL ACCURACY**	TRACEABILITY
NITRIC OXIDE	93.4	PPM	+/- 1%	Direct NIST and NMi
NITROGEN - OXYGEN FREE		BALANCE		
TOTAL OXIDES OF NITROGEN	93.4	PPM		Reference Value Only

*** Do not use when cylinder pressure is below 150 psig.
** Analytical accuracy is based on the requirements of EPA Protocol Procedure G1, September 1997.

REFERENCE STANDARD

TYPE/SRM NO.	EXPIRATION DATE	CYLINDER NUMBER	CONCENTRATION	COMPONENT
NTRM 1684	01Sep2010	KAL003489	97.68 PPM	NITRIC OXIDE

INSTRUMENTATION

INSTRUMENT/MODEL/SERIAL#	DATE LAST CALIBRATED	ANALYTICAL PRINCIPLE
FTIR//0928621	08Jan2009	FTIR

ANALYZER READINGS

(Z = Zero Gas R = Reference Gas T = Test Gas r = Correlation Coefficient)

First Triad Analysis

NITRIC OXIDE

Date: 06Jan2009	Response Unit:PPM	
Z1 = 0.11274	R1 = 97.67518	T1 = 93.53762
R2 = 97.80120	Z2 = 0.14815	T2 = 93.56364
Z3 = 0.24801	T3 = 93.56889	R3 = 97.90488
Avg. Concentration:	93.44	PPM

Second Triad Analysis

Date: 13Jan2009	Response Unit: PPM	
Z1 = -0.07844	R1 = 97.88885	T1 = 93.49487
R2 = 98.06647	Z2 = -0.03703	T2 = 93.57976
Z3 = 0.09982	T3 = 93.68985	R3 = 98.09367
Avg. Concentration:	93.27	PPM

Calibration Curve

Concentration = A + Bx + Cx2 + Dx3 + Ex4	
r = 9.99998E-1	
Constants:	A = 0.00000E+0
B = 9.99715E-1	C = 1.01000E-4
D = 0.00000E+0	E = 0.00000E+0

C-15 09-177

APPROVED BY: _____
Rob McCrandall

AIR LIQUIDE Air Liquide America Specialty Gases LLC SCOTT™

RATA CLASS

Dual-Analyzed Calibration Standard

1290 COMBERMERE STREET, TROY, MI 48083 Phone: 248-589-2950 Fax: 248-589-2134

CERTIFICATE OF ACCURACY: EPA Protocol Gas

Assay Laboratory

AIR LIQUIDE AMERICA SPECIALTY GASES LLC
1290 COMBERMERE STREET
TROY, MI 48083

P.O. No.: 2277217
Project No.: 05-70601-001

Customer

TESTAMERICA AIR EMISSIONS DALLAS
CUSTOMER# 1015
3226 COMMANDER DR.
CARROLLTON TX 75006

ANALYTICAL INFORMATION

This certification was performed according to EPA Traceability Protocol For Assay & Certification of Gaseous Calibration Standards; Procedure G-1; September, 1997.

Cylinder Number: ALM059290 **Certification Date:** 18Nov2008 **Exp. Date:** 18Nov2010
Cylinder Pressure*:** 2000 PSIG

COMPONENT	CERTIFIED CONCENTRATION (Moles)		ANALYTICAL ACCURACY**	TRACEABILITY
SULFUR DIOXIDE *	44.35	PPM	+/- 1%	Direct NIST and NMi
NITROGEN		BALANCE		

*** Do not use when cylinder pressure is below 150 psig.

** Analytical accuracy is based on the requirements of EPA Protocol Procedure G1, September 1997.

* This Protocol has been certified using corrected NIST SO2 standard values, per EPA guidance dated 7/24/96 and will not correlate with uncorrected Pr

REFERENCE STANDARD

TYPE/SRM NO.	EXPIRATION DATE	CYLINDER NUMBER	CONCENTRATION	COMPONENT
NTRM 1693	01Dec2011	KAL004073	50.20 PPM	SULFUR DIOXIDE

INSTRUMENTATION

INSTRUMENT/MODEL/SERIAL#	DATE LAST CALIBRATED	ANALYTICAL PRINCIPLE
FTIR//0928621	13Nov2008	FTIR

ANALYZER READINGS

(Z=Zero Gas R=Reference Gas T=Test Gas r=Correlation Coefficient)

SULFUR DIOXIDE *

First Triad Analysis

Date: 11Nov2008	Response Unit:PPM	
Z1=-0.02021	R1=50.31433	T1=44.40741
R2=50.32800	Z2=-0.00566	T2=44.42167
Z3=0.01265	T3=44.44384	R3=50.33845
Avg. Concentration:	44.31	PPM

Second Triad Analysis

Date: 18Nov2008	Response Unit: PPM	
Z1=-0.00853	R1=50.45750	T1=44.62274
R2=50.47474	Z2=0.05458	T2=44.62835
Z3=0.07727	T3=44.64899	R3=50.49935
Avg. Concentration:	44.38	PPM

Calibration Curve

Concentration=A+Bx+Cx2+Dx3+Ex4	
r=9.99990E-1	
Constants:	A=0.00000E+0
B=1.00623E+0	C=-3.00000E-6
D=0.00000E+0	E=0.00000E+0

C-16 09-177

APPROVED BY: _____
Rob McCrandall

AIR LIQUIDE Air Liquide America Specialty Gases LLC SCOTT™

RATA CLASS

Dual-Analyzed Calibration Standard

1290 COMBERMERE STREET, TROY, MI 48083 Phone: 248-589-2950 Fax: 248-589-2134

CERTIFICATE OF ACCURACY: EPA Protocol Gas

Assay Laboratory

AIR LIQUIDE AMERICA SPECIALTY GASES LLC
1290 COMBERMERE STREET
TROY, MI 48083

P.O. No.: 2284521
Project No.: 05-72194-007

Customer

TESTAMERICA AIR EMISSIONS DALLAS
PO# 2284521
3226 COMMANDER DR.
CARROLLTON TX 75006

ANALYTICAL INFORMATION

This certification was performed according to EPA Traceability Protocol For Assay & Certification of Gaseous Calibration Standards; Procedure G-1; September, 1997.

Cylinder Number: BLM005088 **Certification Date:** 13Jan2009 **Exp. Date:** 13Jan2011
Cylinder Pressure*:** 1986 PSIG

COMPONENT	CERTIFIED CONCENTRATION (Moles)		ANALYTICAL ACCURACY**	TRACEABILITY
SULFUR DIOXIDE *	93.8	PPM	+/- 1%	Direct NIST and NMi
NITROGEN		BALANCE		

*** Do not use when cylinder pressure is below 150 psig.

** Analytical accuracy is based on the requirements of EPA Protocol Procedure G1, September 1997.

* This Protocol has been certified using corrected NIST SO2 standard values, per EPA guidance dated 7/24/96 and will not correlate with uncorrected Prot

REFERENCE STANDARD

TYPE/SRM NO.	EXPIRATION DATE	CYLINDER NUMBER	CONCENTRATION	COMPONENT
NTRM 1694	15Aug2009	ALM043477	97.81 PPM	SULFUR DIOXIDE

INSTRUMENTATION

INSTRUMENT/MODEL/SERIAL#	DATE LAST CALIBRATED	ANALYTICAL PRINCIPLE
FTIR//0928621	07Jan2009	FTIR

ANALYZER READINGS

(Z = Zero Gas R = Reference Gas T = Test Gas r = Correlation Coefficient)

SULFUR DIOXIDE *

First Triad Analysis

Date: 06Jan2009 Response Unit:PPM

Z1 = -0.02866	R1 = 98.60865	T1 = 94.59528
R2 = 98.61093	Z2 = -0.00764	T2 = 94.62077
Z3 = -0.00256	T3 = 94.64138	R3 = 98.64805

Avg. Concentration: 93.84 PPM

Second Triad Analysis

Date: 13Jan2009 Response Unit: PPM

Z1 = -0.00840	R1 = 98.60700	T1 = 94.47978
R2 = 98.65697	Z2 = 0.00889	T2 = 94.56291
Z3 = 0.03608	T3 = 94.56618	R3 = 98.66281

Avg. Concentration: 93.74 PPM

Calibration Curve

Concentration = A + Bx + Cx2 + Dx3 + Ex4
r = 9.99992E-1

Constants:	A = 0.00000E+0
B = 1.00718E+0	C = 3.00000E-6
D = 0.00000E+0	E = 0.00000E+0

C-17 09-177

APPROVED BY: 2
Rob McCrandall

AIR LIQUIDE

Scott Specialty Gases
Air Liquide America Specialty Gases LLC

RATA CLASS

Dual-Analyzed Calibration Standard

9810 BAY AREA BLVD, PASADENA, TX 77507 Phone: 281-474-5800 Fax: 281-474-5857

CERTIFICATE OF ACCURACY: EPA Protocol Gas

Assay Laboratory

SCOTT SPECIALTY GASES
9810 BAY AREA BLVD
PASADENA, TX 77507

P.O. No.: BRFOLIO
Project No.: 04-65039-001

Customer

METCO ENVIRONMENTAL

3226 COMMANDER DR
CARROLLTON TX 75006

ANALYTICAL INFORMATION

This certification was performed according to EPA Traceability Protocol For Assay & Certification of Gaseous Calibration Standards; Procedure G-1; September, 1997.

Cylinder Number: ALM041473 **Certification Date:** 17Jun2008 **Exp. Date:** 17Jun2011
Cylinder Pressure*:** 1892 PSIG

COMPONENT	CERTIFIED CONCENTRATION (Moles)		ANALYTICAL ACCURACY**	TRACEABILITY
CARBON MONOXIDE	42.7	PPM	+/- 1%	Direct NIST and NMi
NITROGEN		BALANCE		

*** Do not use when cylinder pressure is below 150 psig.

** Analytical accuracy is based on the requirements of EPA Protocol Procedure G1, September 1997.

REFERENCE STANDARD

TYPE/SRM NO.	EXPIRATION DATE	CYLINDER NUMBER	CONCENTRATION	COMPONENT
NTRM 1678	15Aug2009	ALM046510	51.13 PPM	CARBON MONOXIDE

INSTRUMENTATION

INSTRUMENT/MODEL/SERIAL#	DATE LAST CALIBRATED	ANALYTICAL PRINCIPLE
FTIR//1602651	29May2008	FTIR

ANALYZER READINGS

(Z=Zero Gas R=Reference Gas T=Test Gas r=Correlation Coefficient)

First Triad Analysis

CARBON MONOXIDE

Date: 10Jun2008	Response Unit:PPM	
Z1=0.01461	R1=51.09357	T1=42.69991
R2=51.11856	Z2=0.03680	T2=42.72591
Z3=0.04242	T3=42.75336	R3=51.18061
Avg. Concentration:	42.72	PPM

Second Triad Analysis

Date: 17Jun2008	Response Unit: PPM	
Z1=-0.00392	R1=51.05954	T1=42.64672
R2=51.15378	Z2=0.02708	T2=42.73265
Z3=0.05005	T3=42.76675	R3=51.20206
Avg. Concentration:	42.70	PPM

Calibration Curve

Concentration=A+Bx+Cx2+Dx3+Ex4
r=9.99994E-1

Constants:	A=0.00000E+0
B=8.24254E-1	C=5.04000E-4
D=1.00000E-6	E=0.00000E+0

APPROVED BY: _____ C-18 09-177
Ramien JR

AIR LIQUIDE™ Scott Specialty Gases
Air Liquide America Specialty Gases LLC

RATA CLASS

Dual-Analyzed Calibration Standard

9810 BAY AREA BLVD, PASADENA, TX 77507 Phone: 281-474-5800 Fax: 281-474-5857

CERTIFICATE OF ACCURACY: EPA Protocol Gas

Assay Laboratory

SCOTT SPECIALTY GASES
9810 BAY AREA BLVD
PASADENA, TX 77507

P.O. No.: BRFOLIO
Project No.: 04-65039-002

Customer

METCO ENVIRONMENTAL

3226 COMMANDER DR
CARROLLTON TX 75006

ANALYTICAL INFORMATION

This certification was performed according to EPA Traceability Protocol For Assay & Certification of Gaseous Calibration Standards; Procedure G-1; September, 1997.

Cylinder Number: AAL19513 **Certification Date:** 17Jun2008 **Exp. Date:** 17Jun2011
Cylinder Pressure*:** 1898 PSIG

COMPONENT	CERTIFIED CONCENTRATION (Moles)		ANALYTICAL ACCURACY**	TRACEABILITY
CARBON MONOXIDE	94.1	PPM	+/- 1%	Direct NIST and NMi
NITROGEN		BALANCE		

*** Do not use when cylinder pressure is below 150 psig.

** Analytical accuracy is based on the requirements of EPA Protocol Procedure G1, September 1997.

REFERENCE STANDARD

TYPE/SRM NO.	EXPIRATION DATE	CYLINDER NUMBER	CONCENTRATION	COMPONENT
NTRM 1679	02Oct2010	KAL003168	101.0 PPM	CARBON MONOXIDE

INSTRUMENTATION

INSTRUMENT/MODEL/SERIAL#	DATE LAST CALIBRATED	ANALYTICAL PRINCIPLE
FTIR//1602651	29May2008	FTIR

ANALYZER READINGS

(Z=Zero Gas R=Reference Gas T=Test Gas r=Correlation Coefficient)

First Triad Analysis

CARBON MONOXIDE

Date: 10Jun2008	Response Unit:PPM	
Z1=-0.00163	R1=101.0684	T1=94.09745
R2=101.1002	Z2=0.07630	T2=94.12900
Z3=0.12205	T3=94.17308	R3=101.1584
Avg. Concentration:	94.03	PPM

Second Triad Analysis

Date: 17Jun2008	Response Unit: PPM	
Z1=0.02883	R1=100.9480	T1=94.26343
R2=101.2954	Z2=0.12193	T2=94.30475
Z3=0.16028	T3=94.32699	R3=101.3805
Avg. Concentration:	94.10	PPM

Calibration Curve

Concentration=A+Bx+Cx2+Dx3+Ex4	
r=9.99994E-1	
Constants:	A=0.00000E+0
B=8.24254E-1	C=5.04000E-4
D=1.00000E-6	E=0.00000E+0

APPROVED BY: _____ C-19 09-177
Ramien JR

RATA CLASS

Scott Specialty Gases

Dual-Analyzed Calibration Standard

9810 BAY AREA BLVD,PASADENA,TX 77507 Phone: 281-474-5800 Fax: 281-474-5857

CERTIFICATE OF ACCURACY: EPA Protocol Gas

Assay Laboratory

SCOTT SPECIALTY GASES
9810 BAY AREA BLVD
PASADENA,TX 77507

P.O. No.: 12121
Project No.: 04-57308-007

Customer

METCO ENVIRONMENTAL

3226 COMMANDER DR
CARROLLTON TX 75006

ANALYTICAL INFORMATION

This certification was performed according to EPA Traceability Protocol For Assay & Certification of Gaseous Calibration Standards; Procedure G-1; September, 1997.

Cylinder Number: BLM003905 **Certification Date:** 17Sep2007 **Exp. Date:** 17Sep2010
Cylinder Pressure*:** 2000 PSIG

COMPONENT	CERTIFIED CONCENTRATION (Moles)		ANALYTICAL ACCURACY**	TRACEABILITY
PROPANE	26.1	PPM	+/- 1%	Direct NIST and NMi
NITROGEN		BALANCE		

*** Do not use when cylinder pressure is below 150 psig.

** Analytical accuracy is based on the requirements of EPA Protocol Procedure G1, September 1997.

REFERENCE STANDARD

TYPE/SRM NO.	EXPIRATION DATE	CYLINDER NUMBER	CONCENTRATION	COMPONENT
NTRM 1668	04Jul2008	ALM043134	98.80 PPM	PROPANE

INSTRUMENTATION

INSTRUMENT/MODEL/SERIAL#	DATE LAST CALIBRATED	ANALYTICAL PRINCIPLE
HP-Y/HP 6890/US00000974	30Aug2007	GAS CHROMATOGRAPHY

ANALYZER READINGS

(Z=Zero Gas R=Reference Gas T=Test Gas r=Correlation Coefficient)

First Triad Analysis

PROPANE

Date: 17Sep2007	Response Unit:AREA	
Z1=152151.7	R1=1583882.	T1=416901.2
R2=1579332.	Z2=152208.2	T2=417563.5
Z3=152717.2	T3=419097.7	R3=1586265.
Avg. Concentration:	26.05	PPM

Second Triad Analysis

Calibration Curve

Concentration=A+Bx+Cx2+Dx3+Ex4	
r=.999995	
Constants:	A=-.0752
B=0.0000626	C=
D=	E=

APPROVED BY: JAMIE TOLLESON C-20 SUPERVISOR: JOHN SEMPE 09-177

AIR LIQUIDE™ Scott Specialty Gases
Air Liquide America Specialty Gases LLC

RATA CLASS

Dual-Analyzed Calibration Standard

9810 BAY AREA BLVD, PASADENA, TX 77507 Phone: 281-474-5800 Fax: 281-474-5857

CERTIFICATE OF ACCURACY: EPA Protocol Gas

Assay Laboratory

SCOTT SPECIALTY GASES
9810 BAY AREA BLVD
PASADENA, TX 77507

P.O. No.: DFOLIO
Project No.: 04-65040-010

Customer

METCO ENVIRONMENTAL

3226 COMMANDER DR
CARROLLTON TX 75006

ANALYTICAL INFORMATION

This certification was performed according to EPA Traceability Protocol For Assay & Certification of Gaseous Calibration Standards; Procedure G-1; September, 1997.

Cylinder Number: LL6768 **Certification Date:** 18Jun2008 **Exp. Date:** 18Jun2011
Cylinder Pressure*:** 1950 PSIG

COMPONENT	CERTIFIED CONCENTRATION (Moles)		ANALYTICAL ACCURACY**	TRACEABILITY
PROPANE	47.3	PPM	+/- 1%	Direct NIST and NMi
NITROGEN		BALANCE		

*** Do not use when cylinder pressure is below 150 psig.

** Analytical accuracy is based on the requirements of EPA Protocol Procedure G1, September 1997.

REFERENCE STANDARD

TYPE/SRM NO.	EXPIRATION DATE	CYLINDER NUMBER	CONCENTRATION	COMPONENT
NTRM 1668	02Oct2012	ALM013540	98.80 PPM	PROPANE

INSTRUMENTATION

INSTRUMENT/MODEL/SERIAL#	DATE LAST CALIBRATED	ANALYTICAL PRINCIPLE
HP-Y/HP 6890/US00000974	18Jun2008	GAS CHROMATOGRAPHY

ANALYZER READINGS

(Z=Zero Gas R=Reference Gas T=Test Gas r=Correlation Coefficient)

First Triad Analysis

PROPANE

Date: 18Jun2008 Response Unit:PPM

Z1=0.00000	R1=1643507.	T1=784929.0
R2=1638875.	Z2=0.00000	T2=786943.0
Z3=0.00000	T3=786536.0	R3=1640867.

Avg. Concentration: 47.33 PPM

Second Triad Analysis

Calibration Curve

Concentration=A+Bx+Cx2+Dx3+Ex4
r=0.999998

Constants:	A=0.00487657
B=6.04E-05	C=
D=	E=

Special Notes: FOLIO # 0925

APPROVED BY: L. JONES

C-21

09-177

Spectra Gases, Inc.

3434 Route 22 West, Branchburg, New Jersey 08876 USA

ISO 9001:2000

Shipped from: 80 Industrial Drive, Alpha, NJ 08865

CERTIFICATE OF ANALYSIS

EPA PROTOCOL MIXTURE

PROCEDURE # : G1

CUSTOMER: Test America
SGI ORDER # : 118720
ITEM# : 3
P.O.# : 2215791

CYLINDER # : LL-78615
CYLINDER PRES: 2000 PSIG
CGA OUTLET: 350

CERTIFICATION DATE: 11/12/2007
EXPIRATION DATE: 11/12/2010

CERTIFICATION HISTORY

COMPONENT	DATE OF ASSAY	MEAN CONCENTRATION	CERTIFIED CONCENTRATION	ANALYTICAL ACCURACY
Propane	11/12/2007	86.1 ppm	86.1 ppm	+/- 1%

BALANCE Nitrogen

PREVIOUS CERTIFICATION DATES: None

REFERENCE STANDARDS

COMPONENT	SRM/NTRM#	CYLINDER#	CONCENTRATION
Propane	GMIS-1	CC-113884	100.4 ppm

INSTRUMENTATION

COMPONENT	MAKE/MODEL	SERIAL #	DETECTOR	CALIBRATION DATE(S)
Propane	H. Packard 6890	US00001434	GC - FID	10/30/2007

THIS STANDARD IS NIST TRACEABLE. IT WAS CERTIFIED ACCORDING TO THE EPA PROTOCOL PROCEDURES.
DO NOT USE THIS STANDARD IF THE CYLINDER PRESSURE IS LESS THAN 150 PSIG.

ANALYST: CP
CHERYL PATINO

C-22

DATE: 11/12/2007

09-177

Tel: +1 908-252-9300 Fax: +1 908-252-0811
www.spectragases.com

AIR LIQUIDE Air Liquide America Specialty Gases LLC SCOTT™

RATA CLASS

Dual-Analyzed Calibration Standard

1290 COMBERMERE STREET, TROY, MI 48083 Phone: 248-589-2950 Fax: 248-589-2134

CERTIFICATE OF ACCURACY: EPA Protocol Gas

Assay Laboratory

AIR LIQUIDE AMERICA SPECIALTY GASES LLC
1290 COMBERMERE STREET
TROY, MI 48083

P.O. No.: 2284521
Project No.: 05-72194-003

Customer

TESTAMERICA AIR EMISSIONS DALLAS
PO# 2284521
3226 COMMANDER DR.
CARROLLTON TX 75006

ANALYTICAL INFORMATION

This certification was performed according to EPA Traceability Protocol For Assay & Certification of Gaseous Calibration Standards; Procedure G-1; September, 1997.

Cylinder Number: ALM006904 **Certification Date:** 13Jan2009 **Exp. Date:** 13Jan2012
Cylinder Pressure*:** 2000 PSIG

COMPONENT	CERTIFIED CONCENTRATION (Moles)		ANALYTICAL ACCURACY**	TRACEABILITY
CARBON DIOXIDE	12.0	%	+/- 1%	Direct NIST and NMi
OXYGEN	11.8	%	+/- 1%	Direct NIST and NMi
NITROGEN		BALANCE		

*** Do not use when cylinder pressure is below 150 psig.
** Analytical accuracy is based on the requirements of EPA Protocol Procedure G1, September 1997.

REFERENCE STANDARD

TYPE/SRM NO.	EXPIRATION DATE	CYLINDER NUMBER	CONCENTRATION	COMPONENT
NTRM 2000	01Jul2009	K026898	5.006 %	CARBON DIOXIDE
NTRM 2350	01Dec2011	K016398	23.20 %	OXYGEN

INSTRUMENTATION

INSTRUMENT/MODEL/SERIAL#	DATE LAST CALIBRATED	ANALYTICAL PRINCIPLE
PIR/2000/609015	13Jan2009	NDIR
CAI/110P/V03018	22Dec2008	PARAMAGNETIC

ANALYZER READINGS

(Z = Zero Gas R = Reference Gas T = Test Gas r = Correlation Coefficient)

First Triad Analysis **Second Triad Analysis** **Calibration Curve**

CARBON DIOXIDE

Date: 13Jan2009 Response Unit:MV

Z1 = 0.00000	R1 = 39.40000	T1 = 75.50000
R2 = 39.40000	Z2 = 0.00000	T2 = 7535.000
Z3 = 0.00000	T3 = 75.50000	R3 = 39.40000

Avg. Concentration: 12.04 %

Concentration = A + Bx + Cx2 + Dx3 + Ex4
r = 0.999998

Constants:	A = -0.0052472
B = 0.108852633	C = 0.0002522
D = 5.76883E-06	E = 0

OXYGEN

Date: 13Jan2009 Response Unit:%

Z1 = 0.00000	R1 = 23.20000	T1 = 11.77000
R2 = 23.20000	Z2 = 0.00000	T2 = 11.77000
Z3 = 0.00000	T3 = 11.77000	R3 = 23.20000

Avg. Concentration: 11.76 %

Concentration = A + Bx + Cx2 + Dx3 + Ex4
r = 0.999999

Constants:	A = -0.00558057
B = 0.999821643	C = 0
D = 0	E = 0

C-23 09-177

APPROVED BY: _____
JEFF CROTEAU

AIR LIQUIDE™ Scott Specialty Gases
Air Liquide America Specialty Gases LLC

Shipped From:
9810 BAY AREA BLVD
PASADENA TX 77507
Phone: 281-474-5800 Fax: 281-474-5857

CERTIFICATE OF ANALYSIS

METCO ENVIRONMENTAL

3226 COMMANDER DR

CARROLLTON TX 75006

PROJECT #: 04-61887-001
PO#: 2233774
ITEM #: 0401022 AL
DATE: 25Feb2008

CYLINDER #: AAL20005
FILL PRESSURE: 02000 PSIG

PURE MATERIAL: AIR CAS# 132259-10-0

GRADE: HYDROCARBONFREE

PURITY: -

IMPURITY	MAXIMUM CONCENTRATIONS
O2	20 TO 21%
CO	0.5 PPM
CO2	1 PPM
H2O	5 PPM
THC(CH4)	0.1 PPM

APPENDIX D

Field Testing Data

METCO ENVIRONMENTAL

Job Number: 09-177
Job Name: Valero
Run Number: 1
Unit: 38X 1600
Date: 4-14-09
Operator: Moore / Pilgrim Contrals
Sample box No. 43-1 Meter Box No. 43-3 ✓

Meth 1-5 Field Data

Read and record at the start of each test point.

Purge to: —
Purge time: —
Pitot Leak Check Initial ✓ Final ✓

Ambient Temp. °F 75°
Assumed Moisture % 9.00%
Probe Length Air Cooled Probe
C Factor .9 → 20 to reference.
Initial Leak @ 20.0 "Hg = 0.000 cfm
Final Leak @ 10.0 "Hg = 0.000 cfm
Pitot Tips Damaged During Test? Yes (No)

Point	Clock Time	Dry Gas Meter, CF	ΔP_s "Pitot" "H_2O	Orifice ΔH "H_2O Desired	P_m Orifice ΔH "H_2O Actual	Pump Vacuum "Hg Gauge	T_s Stack Temp °F	Probe Temp °F	Oven Temp °F	Effluent Temp °F	T_m Dry Gas Temp °F Inlet	Dry Gas Temp °F Outlet	Remarks
A 6	1200	755.167	0.04	0.88	0.88	2.5	1121	250	251	64	69	68	Filter
5	1203	757.17	0.05	1.10	1.10	2.5	1186	251	250	62	68	69	
4	1206	758.81	0.05	1.10	1.10	3.0	1191	251	249	60	67	69	
3	1209	761.00	0.05	1.10	1.10	3.0	1188	248	253	58	66	72	
2	1212	762.69	0.05	1.10	1.10	3.0	1159	253	257	56	65	73	Leak ✓ @ 7in = 0.000
1	1215	764.28	0.05	1.10	1.10	3.0	1086	256	254	58	65	75	Leak ✓ @ 7in = 0.000
END	1218	766.000	—	—	—	—	—	—	—	—	—	—	V_m = 0.129
B 6	1248	766.129	0.05	1.10	1.10	3.0	1079	253	257	68	68	70	
5	1251	767.27	0.05	1.10	1.10	3.0	1120	253	258	67	67	71	
4	1254	769.01	0.06	1.30	1.30	3.0	1133	256	261	67	67	72	
3	1257	770.81	0.06	1.30	1.30	3.0	1140	258	258	67	67	76	
2	1300	772.67	0.06	1.30	1.30	3.0	1136	256	258	67	67	77	Leak ✓ @ 7in = 0.000
1	1303	774.35	0.06	1.30	1.30	3.0	1108	255	255	66	66	79	Leak ✓ @ 7in = 0.000
END	1306	776.141	—	—	—	—	—	—	—	—	—	—	V_m = 0.141
C 6	1318	776.282	0.04	0.88	0.88	3.0	1080	251	251	67	69	76	
5	1321	778.32	0.05	1.10	1.10	3.0	1101	250	250	67	67	78	
4	1324	780.55	0.05	1.10	1.10	3.0	1115	253	248	68	68	80	
3	1327	781.68	0.05	1.10	1.10	3.0	1105	253	249	67	67	81	

Pitot Tube Calibration Factor C_p 0.811 ✓
Volume Collected V_m 41.379 ✓ ft^3
Water Collected V_w 76.1 ✓ ml
Time of Test T_t 72 ✓ min.
Stack Pressure P_s -0.70 ✓ "H_2O

Pitot Tube No. ACP-7 ✓
Baro. Press. P_b 30.06 ✓ "Hg
Probe Tip Dia. D_n ~~0.311~~ 0.525 in.
% CO_2 3.7 ✓ % CO 0.0 ✓
% O_2 ~~7.5~~ ✓ 12.1 % N_2 ~~88.8~~ ✓ 84.2

Barometer No. 43-1 ✓ Probe Tip No. 09-177-1 ✓
Total Volume of Leak Checks After Start: 0.378 ✓ ft^3
V_m = Dry Gas Meter Calibration Factor 1.004 ✓ X 41.214
Area Stack A_s 7815 ✓ in^2
{Dry Gas Meter Reading — ft^3 – (T_t — min. X Leak Rate — cfm)}

QA/QC Check
Completeness ✓ Legibility ✓ Accuracy ✓ Specifications ✓ Reasonableness ✓ Checked by: NS

Version 2
1 February 2008

D-2

09-177

Impinger Box No. 43-1

Impinger 1	Final Weight	792.8		Impinger 1	60.5
	Initial Weight	732.3			
	Increase			Impinger 2	7.1
Impinger 2	Final Weight	699.8		Impinger 3	1.5
	Initial Weight	692.7			
	Increase			Impinger 4	7.0
			V_w =		
Impinger 3	Final Weight	673.6	g SO_2 = -	Impinger 5	
	Initial Weight	672.1	V_w =		
	Increase			Impinger 6	
Impinger 4	Final Weight	946.8		Impinger 7	
	Initial Weight	937.8			
	Increase			Total	76.1 ✓ = V_w

Water Weight Gain

Impinger 5	Final Weight		P_b =	30.06 ✓	$\%CO_2$ =	3.7 ✓	
	Initial Weight		V_m =	41.379 ✓	$\%O_2$ =	~~7.5~~ ✓	12.1 slpm
	Increase		V_w =	76.1 ✓	%CO =	0.0 ✓	
			P_m =	1.140 ✓	$\%N_2$ =	~~88.8~~ ✓	84.2 slpm
Impinger 6	Final Weight		Avg ΔP =	0.652 ✓	A_s =	7815 ✓	
	Initial Weight				D_n =	0.525 ✓	
	Increase		Avg$\sqrt{\Delta P}$ =	0.228 ✓	T_t =	72 ✓	
			C_p =	0.811 ✓			
Impinger 7	Final Weight		P_s =	-0.70 ✓ "H_2O		30.01 ✓	"Hg
	Initial Weight		T_m =	72 ✓ °F		532 ✓	°R
	Increase		T_s =	1139 ✓ °F		1599 ✓	°R

Moisture Content: %M = 7.99 ✓ M_d = 0.9201 ✓ MW_d = ~~28.892~~ ✓ 29.070 slpm MW = ~~28.02~~ ✓ 28.19 slpm

$$Vm_{std} = 17.65\ Vm \left[\frac{P_b + \frac{P_m}{13.6}}{T_m + 460}\right] = 17.65 \times 41.379 \left[\frac{30.06 + \frac{1.140}{13.6}}{72 + 460}\right] = 41.382 \text{ sft}^3 \quad 0.575 \text{ scfm}$$

Vw_{gas} = 0.0472 x Vw = 0.0472 x 76.1 ✓ = 3.592 ✓ sft^3

% Moisture = $\frac{Vw_{gas}}{Vm_{std} + Vw_{gas}}$ x 100 = $\frac{3.592}{41.382 + 3.592}$ ✓ x 100 = 7.99 ✓ %

V_s = 5123.8 x 0.811 ✓ $\sqrt{\frac{1599}{28.02 \text{ ✓ } 28.19 \text{ slpm} \times 30.01}}$ ✓ x 0.228 ✓ = ~~1306~~ ✓ 1303 slpm fpm

ACFM: ~~70,904~~ ✓ 70,690 slpm

SCFM: ~~21,679~~ ✓ 21,624

%I = $\frac{1{,}039 \times 1599 \times 41.382}{0.9201 \times 1306 \times 30.01 \times 72 \times (0.525)^2}$ ✓ = ~~96.1~~ ✓ 96.3 slpm %

%EA: ~~46.8~~ ✓ 118.5 slpm

Run Number 1 Mth 1-5 FIELD DATA

Unit 30X 1600

Date 4-14-09

Point	Clock Time	Dry Gas Meter, CF	ΔP_s "Pitot" "H_2O	Orifice ΔH "H_2O Desired	P_m Orifice ΔH "H_2O Actual	Pump Vacuum "Hg Gauge	T_s Stack Temp °F	Probe Temp °F	Oven Temp °F	Effluent Temp °F	T_m Dry Gas Temp °F Inlet	Dry Gas Temp °F Outlet	Remarks
2	1330	783.21	0.05	1.10	1.10	3.0	1108	249	256	64	68	81	Leak ✓ @ 7in = 0.000
1	1333	784.96	0.05	1.10	1.10	3.0	1086	251	258	64	68	82	Leak ✓ @ 7in = 0.000
END	1336	786.726	—	—	—	—	—	—	—	—	—	—	Vm = 0.108
D 6	1353	786.834	0.06	1.30	1.30	3.0	1195	252	261	65	70	79	
5	1356	788.69	0.07	1.50	1.50	3.0	1197	253	264	64	70	81	
4	1359	790.33	0.05	1.10	1.10	3.0	1190	252	261	63	70	80	
3	1402	792.21	0.05	1.10	1.10	3.0	1186	254	260	63	70	80	
2	1405	793.94	0.05	1.10	1.10	3.0	1172	255	262	64	71	80	
1	1408	795.46	0.05	1.10	1.10	3.0	1161	255	263	64	71	81	
END	1411	796.739	—	—	—	—	—	—	—	—	—	—	

QA/QC Check

Completeness ✓ Legibility ✓ Accuracy ✓ Specifications ✓ Reasonableness ✓

Checked by: NS

Version 2
1 February 2008

METCO ENVIRONMENTAL

Job Number: 09-177
Job Name: Valero
Run Number: 2
Unit: 30X 1600
Date: 4-14-09
Operator: Moore / Pilgrim / Centrelli
Sample box No. 43-2 Meter Box No. 43-3 ✓

Meth 1-5 Field Data

Read and record at the start of each test point.

Purge to: —
Purge time: —
Pitot Leak Check Initial ✓ Final ✓

Ambient Temp. °F 76°
Assumed Moisture % 7.00%
Probe Length Air Cooled Probe
C Factor .9 → 20 to reference.
Initial Leak @ 20.0 "Hg = 0.000 cfm
Final Leak @ 10.0 "Hg = 0.000 cfm
Pitot Tips Damaged During Test? Yes (No)

Point	Clock Time	Dry Gas Meter, CF	ΔP_s "Pitot" "H_2O	Orifice ΔH "H_2O Desired	P_m Orifice ΔH "H_2O Actual	Pump Vacuum "Hg Gauge	T_s Stack Temp °F	Probe Temp °F	Oven Temp °F	Effluent Temp °F	T_m Dry Gas Temp °F Inlet	Dry Gas Temp °F Outlet	Remarks
D 6	1450	796.914	0.05	1.10	1.10	3.0	1160	252	251	60	74	76	
5	1453	798.85	0.05	1.10	1.10	3.0	1158	255	256	56	72	78	
4	1456	800.55	0.05	1.10	1.10	3.0	1166	259	259	55	72	80	
3	1459	802.31	0.05	1.10	1.10	3.0	1154	257	260	55	72	81	
2	1502	804.18	0.04	0.88	0.88	3.0	1141	260	257	54	72	82	Lk ✓ @ 7in = 0.000
1	1505	806.65	0.04	0.88	0.88	3.0	1111	258	260	54	74	84	Lak ✓ @ 7in = 0.000
END	1508	807.828	—	—	—	—	—	—	—	—	—	—	V_m = 0.202
C 6	1523	808.030	0.04	0.88	0.88	3.0	1083	255	258	66	73	81	
5	1526	809.99	0.04	0.88	0.88	3.0	1100	255	257	64	73	81	
4	1529	811.75	0.05	1.10	1.10	3.0	1114	250	255	62	74	83	
3	1532	813.32	0.05	1.10	1.10	3.0	1103	252	256	61	74	83	
2	1535	814.99	0.05	1.10	1.10	3.0	1117	255	259	60	73	85	Lak ✓ @ 7in = 0.000
1	1538	817.01	0.04	0.88	0.88	3.0	1090	252	259	60	74	86	Lak ✓ @ 7in = 0.000
END	1541	818.747	—	—	—	—	—	—	—	—	—	—	V_m = 0.248
B 6	1551	818.995	0.05	1.10	1.10	3.0	1081	253	259	66	75	82	
5	1554	820.64	0.05	1.10	1.10	3.0	1126	256	255	65	77	82	
4	1557	822.45	0.06	1.30	1.30	3.0	1131	254	253	63	77	85	
3	1600	824.20	0.06	1.30	1.30	3.0	1145	251	250	61	77	86	

Pitot Tube Calibration Factor C_p 0.811 ✓
Volume Collected V_m ~~42.385~~ ft^3 41.676 4/21/09 RS
Water Collected V_w 75.2 ✓ ml
Time of Test T_t 72 ✓ min.
Stack Pressure P_s -0.70 ✓ "H_2O

Pitot Tube No. ACP-9 ✓
Baro. Press. P_b 30.02 ✓ "Hg
Probe Tip Dia. D_n 0.525 ✓ in.
% CO_2 3.6 ✓ % CO 0.0 ✓
% O_2 ~~7.6~~ 11.6 5/12/09 RS ✓ % N_2 ~~88.8~~ 84.8 5/12/09 RS ✓

Barometer No. 43-1 ✓ Probe Tip No. 09-177-1 ✓
Total Volume of Leak Checks After Start: 0.706 ✓ ft^3
V_m = Dry Gas Meter Calibration Factor 1.004 ✓ X ~~42.276~~ 41.510
Area Stack A_s 7815 ✓ in^2
{Dry Gas Meter Reading — ft^3 – (T_t — min. X Leak Rate — cfm)}

QA/QC Check
Completeness ✓ Legibility ✓ Accuracy ✓ Specifications ✓ Reasonableness ✓ Checked by: RS

Version 2
1 February 2008

Impinger Box No. 43-2

Water Weight Gain

Impinger 1	Final Weight	811.3		Impinger 1	58.1
	Initial Weight	753.2			
	Increase			Impinger 2	7.7
Impinger 2	Final Weight	734.6		Impinger 3	1.8
	Initial Weight	726.9			
	Increase			Impinger 4	7.6
			V_w =		
Impinger 3	Final Weight	638.7	g SO_2 = -	Impinger 5	
	Initial Weight	636.9	V_w =		
	Increase			Impinger 6	
Impinger 4	Final Weight	937.1		Impinger 7	
	Initial Weight	929.5			
	Increase			Total	75.2 = V_w

Impinger 5	Final Weight		P_b =	30.02	$\%CO_2$ =	3.6	
	Initial Weight		V_m =	~~42.385~~ 41.676 41.079	$\%O_2$ =	~~7.6~~ 1.6	5/12/09
	Increase		V_w =	75.2	%CO =	0.0	
			P_m =	1.096	$\%N_2$ =	~~88.8~~ 88.8	
Impinger 6	Final Weight		Avg ΔP =	0.050	A_s =	7815	
	Initial Weight				D_n =	0.525	
	Increase		Avg$\sqrt{\Delta P}$ =	0.223	T_t =	72	
			C_p =	0.811			
Impinger 7	Final Weight		P_s =	-0.70	$"H_2O$	29.97	"Hg
	Initial Weight		T_m =	79	°F	537	°R
	Increase		T_s =	1131	°F	1591	°R

Moisture Content: %M = ~~7.85~~ 7.95 M_d = ~~0.7217~~ 0.9205 MW_d = ~~28.880~~ 29.040 5/12/09 MW = ~~28.02~~ 28.16 5/12/09

$$Vm_{std} = 17.65\ Vm \left[\frac{P_b + \frac{P_m}{13.6}}{T_m + 460}\right] = 17.65 \times \cancel{42.385}\ 41.676\ 41.079 \left[\frac{30.02 + \frac{1.096}{13.6}}{79 + 460}\right] = \cancel{41.778}\ 41.079\ \text{sft}^3 \quad \cancel{0.580}\ 0.541\ \text{scfm}$$

Vw_{gas} = 0.0472 x Vw = 0.0472 x 75.2 = 3.549 sft^3

$$\%\ \text{Moisture} = \frac{Vw_{gas}}{Vm_{std} + Vw_{gas}} \times 100 = \frac{3.549}{41.079\ \cancel{41.778} + 3.549} \times 100 = \cancel{7.85}\ 7.95\ \%$$

$$V_s = 5123.8 \times 0.811 \sqrt{\frac{1591}{29.97 \times \cancel{28.02}\ 28.16}} \times 0.223 = \cancel{1275}\ 1272\ \text{fpm}$$

ACFM: ~~69.222~~ 69.049

SCFM: ~~21.277~~ 21,261

$$\%I = \frac{1{,}039 \times 1591 \times \cancel{41.778}\ 41.079}{\cancel{0.7217}\ 0.9205 \times 29.97 \times \cancel{1275}\ 1272 \times 72 \times (0.525)^2} = \cancel{98.8}\ 97.5\ \%$$

%EA: ~~47~~ 106.7

Run Number 2 Meth 1-5 FIELD DATA

Unit 30X 1600

Date 4-14-09

Point	Clock Time	Dry Gas Meter, CF	ΔP_s "Pitot" "H_2O	Orifice ΔH "H_2O Desired	P_m Orifice ΔH "H_2O Actual	Pump Vacuum "Hg Gauge	T_s Stack Temp °F	Probe Temp °F	Oven Temp °F	Effluent Temp °F	T_m Dry Gas Temp °F Inlet	Dry Gas Temp °F Outlet	Remarks
2	1603	826.12	0.06	1.30	1.30	3.0	1134	250	250	61	76	87	Leak ✓ @ 7in = 0.000
1	1606	828.08	0.07	1.50	1.50	3.0	1105	250	253	63	76	87	Leak ✓ @ 7in = 0.000
END	1609	829.736	—	—	—	—	—	—	—	—	—	—	Vm = 0.256
a 6	1625	829.792	0.05	1.10	1.10	3.0	1121	255	258	66	76	83	
5	1628	831.79	0.05	1.10	1.10	3.0	1190	259	257	64	76	82	
4	1631	833.47	0.05	1.10	1.10	3.0	1188	262	259	63	76	83	
3	1634	835.37	0.05	1.10	1.10	3.0	1162	255	255	63	77	85	
2	1637	837.58	0.05	1.10	1.10	3.0	1178	252	256	63	77	86	
1	1640	838.20	0.05	1.10	1.10	3.0	1096	250	253	65	77	86	
END	1643	839.130	—	—	—	—	—	—	—	—	—	—	

QA/QC Check

Completeness ✓ Legibility ✓ Accuracy ✓ Specifications ✓ Reasonableness ✓

Checked by: MS

Version 2
1 February 2008

METCO ENVIRONMENTAL

Job Number: 09-177
Job Name: Valero
Run Number: 3
Unit: JOX 1600
Date: 4-15-09
Operator: Moon / Filgas Controls
Sample box No. 43-1 Meter Box No. 43-3 ✓

Mtl 1-5 Field Data

Read and record at the start of each test point.

Purge to: —
Purge time: —
Pitot Leak Check Initial ✓ Final ✓

Ambient Temp. °F 70°
Assumed Moisture % 7.90 %
Probe Length Air Cooled Probe
C Factor .9 → 20 to reference.
Initial Leak @ 20.0 "Hg = 0.000 cfm
Final Leak @ 15.0 "Hg = 0.000 cfm
Pitot Tips Damaged During Test? Yes (No)

Point	Clock Time	Dry Gas Meter, CF	ΔP_s "Pitot" "H_2O	Orifice ΔH "H_2O Desired	P_m Orifice ΔH "H_2O Actual	Pump Vacuum "Hg Gauge	T_s Stack Temp °F	Probe Temp °F	Oven Temp °F	Effluent Temp °F	T_m Dry Gas Temp °F Inlet	Dry Gas Temp °F Outlet	Remarks
A 6	0900	838.751	0.04	~~0.04~~ 0.88	~~2.4~~ 0.88	2.5	1102	251	254	66	86	88	
5	0903	840.52	0.04	0.88	0.88	2.5	1117	252	255	64	82	85	
4	0906	842.04	0.05	1.10	1.00	3.0	1167	251	256	63	85	95	
3	0909	843.93	0.05	1.10	1.10	3.0	1115	252	257	62	85	88	
2	0912	845.84	0.05	1.10	1.10	3.0	1140	253	258	62	84	91	Leak ✓ @ 10in = 0.000
1	0915	847.89	0.05	1.10	1.10	3.0	1148	254	260	61	81	94	Leak ✓ @ 10in = 0.000
END	0918	849.481	—	—	—	—	—	—	—	—	—	—	V_m = 0.120
B 6	0928	849.601	0.05	1.10	1.10	3.0	1131	255	261	66	81	90	
5	0931	851.51	0.05	1.10	1.10	3.0	1099	256	262	66	83	90	
4	0934	853.36	0.06	1.30	1.30	3.5	1136	257	260	64	82	93	
3	0937	855.52	0.06	1.30	1.30	3.5	1090	258	261	65	83	97	
2	0940	857.30	0.05	1.10	1.10	3.5	1151	260	261	65	84	98	Leak ✓ @ 10in = 0.000
1	0943	859.43	0.05	1.10	1.10	3.5	1101	260	261	65	84	98	Leak ✓ @ 10in = 0.000
END	0946	861.175	—	—	—	—	—	—	—	—	—	—	V_m = 0.085
C 6	0956	861.260	0.05	1.10	1.10	3.5	1136	257	262	66	84	93	
5	0959	863.13	0.05	1.10	1.10	3.5	1141	256	261	66	85	94	
4	1002	865.41	0.05	1.10	1.10	3.5	1136	258	261	66	84	99	
3	1005	867.27	0.05	1.10	1.10	3.5	1152	258	260	65	84	102	

Pitot Tube Calibration Factor C_p 0.811 ✓
Volume Collected V_m 43.671 ✓ ft^3
Water Collected V_w 78.9 ✓ ml
Time of Test T_t 72 ✓ min.
Stack Pressure P_s -0.8 ✓ "H_2O

Pitot Tube No. ACP-7 ✓
Baro. Press. P_b 30.12 ✓ "Hg
Probe Tip Dia. D_n 0.525 ✓ in.
% CO_2 3.5 ✓ % CO 0.0 ✓
% O_2 ~~7.4~~ 15.1 ✓ % N_2 ~~89.1~~ 85.0 stoichiometric

Barometer No. 43-1 ✓ Probe Tip No. 09-177-1
Total Volume of Leak Checks After Start: 1.497 ft^3
V_m = Dry Gas Meter Calibration Factor 1.004 ✓ X 43.497 ✓
Area Stack A_s 7815 ✓ in^2
{Dry Gas Meter Reading — ft^3 – (T_t — min. X Leak Rate — cfm)}

QA/QC Check
Completeness ✓ Legibility ✓ Accuracy ✓ Specifications ✓ Reasonableness ✓ Checked by: MS

Version 2
1 February 2008

Impinger Box No. 43-1

Water Weight Gain

Impinger 1	Final Weight	762.9		Impinger 1	57.0
	Initial Weight	705.9			
	Increase			Impinger 2	9.6
Impinger 2	Final Weight	674.4		Impinger 3	3.7
	Initial Weight	664.8			
	Increase			Impinger 4	8.6
			V_w =		
Impinger 3	Final Weight	675.2	g SO_2 = -	Impinger 5	
	Initial Weight	671.5	V_w =		
	Increase			Impinger 6	
Impinger 4	Final Weight	956.8		Impinger 7	
	Initial Weight	948.2			
	Increase			Total	78.9 = V_w

Impinger 5	Final Weight		P_b =	30.12	$\%CO_2$ =	3.5	
	Initial Weight		V_m =	43.671	$\%O_2$ =	~~7.4~~	11.5
	Increase		V_w =	78.9	%CO =	0.0	stoichiometric
			P_m =	1.114	$\%N_2$ =	~~88.1~~	85.0
Impinger 6	Final Weight		Avg ΔP =	0.051	A_s =	7815	
	Initial Weight				D_n =	0.325	
	Increase		Avg$\sqrt{\Delta P}$ =	0.225	T_t =	72	
			C_p =	0.811			
Impinger 7	Final Weight		P_s =	-0.8	"H_2O	30.06	"Hg
	Initial Weight		T_m =	90	°F	550	°R
	Increase		T_s =	1127	°F	1587	°R

Moisture Content: %M = 8.09 M_d = 0.9191 MW_d = ~~28.856~~ 29.020 stoichiometric MW = ~~27.97~~ 28.13

$$Vm_{std} = 17.65\ Vm \left[\frac{P_b + \frac{P_m}{13.6}}{T_m + 460}\right] = 17.65 \times 43.671 \left[\frac{30.12 + \frac{1.114}{13.6}}{90 + 460}\right] = \begin{matrix} 42.326\ \text{sft}^3 \\ 0.588\ \text{scfm} \end{matrix}$$

Vw_{gas} = 0.0472 x Vw = 0.0472 x 78.9 = 3.724 sft^3

$$\%\ \text{Moisture} = \frac{Vw_{gas}}{Vm_{std} + Vw_{gas}} \times 100 = \frac{3.724}{42.326 + 3.724} \times 100 = 8.09\ \%$$

$$V_s = 5123.8 \times 0.811 \sqrt{\frac{1587}{30.06 \times 28.13}} \times 0.225 = 1285\ \text{fpm}$$

1281 stoichiometric

ACFM: 69712 69.514 stoichiometric

SCFM: 21504 21.437

$$\%I = \frac{1{,}039 \times 42.326 \times 1587}{30.06 \times 0.9191 \times 1285 \times 72 \times (0.325)^2} = 99.0\ \%$$

1281 stoichiometric 99.4 stoichiometric

%EA: ~~45.6~~ 09-177

Run Number 3 Mtl 1-5 **FIELD DATA**

Unit 30X 1600

Date 4-15-09

Point	Clock Time	Dry Gas Meter, CF	ΔP_s "Pitot" "H_2O	Orifice ΔH "H_2O Desired	P_m Orifice ΔH "H_2O Actual	Pump Vacuum "Hg Gauge	T_s Stack Temp °F	Probe Temp °F	Oven Temp °F	Effluent Temp °F	T_m Dry Gas Temp °F Inlet	Dry Gas Temp °F Outlet	Remarks
2	1008	868.91	0.05	1.10	1.10	3.0	1102	258	261	64	83	101	Lch ✓ @ 10 in = 0.000
1	1011	870.99	0.04	0.88	0.88	2.0	1130	260	261	62	83	102	Lch ✓ @ 10 in = 0.000
~~D END~~	1014	872.491	—	—	—	—	—	—	—	—	—	—	V_m = 1.292
D 36	1023	873.783	0.05	1.10	1.10	3.0	1109	257	261	61	84	99	
35	1026	874.67	0.05	1.10	1.10	3.0	1121	259	260	61	85	100	
34	1029	876.36	0.05	1.10	1.10	3.0	1128	260	259	63	87	100	
33	1032	878.61	0.07	1.50	1.50	3.5	1146	261	260	61	87	101	
2	1035	880.12	0.06	1.30	1.30	3.5	1082	262	261	60	87	102	
1	1038	882.26	0.05	1.10	1.10	3.0	1160	261	259	60	88	102	
END	1041	883.745	—	—	—	—	—	—	—	—	—	—	

QA/QC Check

Completeness ✓ Legibility ✓ Accuracy ✓ Specifications ✓ Reasonableness ✓

Checked by: [illegible]

Version 2
1 February 2008

PRELIMINARY VELOCITY TRAVERSE DATA
AND
SAMPLING LOCATION DATA

Job Number 09-177

Job Name Valero

Sampling Location 30X 1600

Date 4-13-09 Time 1440

Stack Height 195 ft.

Sampling Port Height Above Ground 124 ft.

	Port A	Port B	Port C	Port D	Average
Port & Inside Diameter (in.)	111 1/4	111 1/4	111 1/4	111 1/4	111 1/4
Port & Wall Thickness (in.)	11 1/2	11 1/2	11 1/2	11 1/2	11 1/2
Inside Stack Diameter (in.)	99 3/4	99 3/4	99 3/4	99 3/4	99 3/4

Sampling Ports are 66 ft. 0 in. (7.94 stack diameters) downstream from disturbance (inlet, constriction, bend, expansion)

Sampling Ports are 9 ft. 3 in. (1.11 stack diameters) upstream from disturbance (outlet, constriction, bend, expansion)

Low Flow

Point Number	Percent Diameter	Distance from Ref. Point (decimal in.)	Distance from Ref. Point (fractional in.)	Port A $\Delta P/T_s/\alpha$	Port B $\Delta P/T_s/\alpha$	Port C $\Delta P/T_s/\alpha$	Port D $\Delta P/T_s/\alpha$
1	2.1	2.095	2 1/8	0.03 / 0801 0	0.02 / 1110 / 0	0.05 / 0891 0	0.06 / 1101 0
2	6.7	6.683	6 11/16	0.05 / 1551 0	0.05 / 1401 0	0.06 / 1091 0	0.05 / 1911 0
3	11.8	11.771	11 3/4	0.05 / 1761 5	0.06 / 1361 5	0.06 / 1071 0	0.05 / 1571 5
4	17.7	17.656	17 5/8	0.05 / 1731 3	0.06 / 1291 2	0.07 / 1121 5	0.05 / 1651 3
5	25.0	24.938	24 15/16	0.05 / 1741 0	0.07 / 1171 2	0.05 / 0991 5	0.06 / 1611 5
6	35.6	35.511	35 1/2	0.05 / 1681 0	0.05 / 0771 0	0.04 / 0801 0	0.05 / 1571 0
7	64.4	64.239	64 1/4	/ /	/ /	/ /	/ /
8	75.0	74.813	74 13/16	/ /	/ /	/ /	/ /
9	82.3	82.094	82 1/8	/ /	/ /	/ /	/ /
10	88.2	87.980	88	/ /	/ /	/ /	/ /
11	93.3	93.067	93 1/16	/ /	/ /	/ /	/ /
12	97.9	97.655	97 5/8	/ /	/ /	/ /	/ /
13				/ /	/ /	/ /	/ /
14				/ /	/ /	/ /	/ /
15				/ /	/ /	/ /	/ /
16				/ /	/ /	/ /	/ /
17				/ /	/ /	/ /	/ /
18				/ /	/ /	/ /	/ /
19				/ /	/ /	/ /	/ /
20				/ /	/ /	/ /	/ /
21				/ /	/ /	/ /	/ /
22				/ /	/ /	/ /	/ /
23				/ /	/ /	/ /	/ /
24				/ /	/ /	/ /	/ /

Pitot Tube No. ACP-7

C_p = 0.811

P_b = 30.04 "Hg

P_s = -0.70 "H_2O 29.99 "Hg

A_s = 7815 in.^{2}

Average ΔP 0.052

Average $\Delta P^{1/2}$ 0.226

Average T_x 1130 °F

Average α 1.67 degrees

APPENDIX E

Analytical Data

METCO Environmental

Particulate Analysis Summary

Job Number 09-177

Date Analysis Completed 4-24-09

Job Name Valero

Unit Tested TOX 1600

Location Norco, La.

Run No.	1	2	3		
Particulate on Filter (mg)	4.6	0.6	1.4		
Particulate in Front Wash (mg)*	7.7	17.2	10.6		
MF (mg)	12.3	17.8	12.0		
Particulate in Impinger #1 (mg)					
MT (mg)					

M. Baxter
Analyst

* Less Acetone Residue

METCO Environmental

Particulate Analysis EPA Method 5

Stack Filters

Job Number 09-177 Location Norco, La

Job Name Valero Unit Tested TOX 1600

Desiccator Time In	1400 4/21				
Desiccator Time Out	1455 4/22	852 4/23			

Run No. 1	Filter No. Q 88 L51				
Filter & Particulate + Tare Weight (g)					
Tare Weight (g)					
Filter & Particulate (g)	0.5525	0.5520 ✓			

Filter & Particulate Average (g) 0.5520

Initial Filter Weight (g) 0.5474

Total Particulate (mg) 4.6 ✓

Run No. 2	Filter No. Q 88 L52				
Filter & Particulate + Tare Weight (g)					
Tare Weight (g)					
Filter & Particulate (g)	0.5496	0.5492 ✓			

Filter & Particulate Average (g) 0.5492

Initial Filter Weight (g) 0.5486

Total Particulate (mg) 0.6 ✓

Run No. 3	Filter No. Q88 R63				
Filter & Particulate + Tare Weight (g)					
Tare Weight (g)					
Filter & Particulate (g)	0.4018	0.4018 ✓			

Filter & Particulate Average (g) 0.4018

Initial Filter Weight (g) 0.4004

Total Particulate (mg) 1.4 ✓

Run No. Blank	Filter No. Q88 L50				
Filter & Particulate + Tare Weight (g)					
Tare Weight (g)					
Filter & Particulate (g)	0.5456	0.5454 ✓			

Mettler AE240

Filter & Particulate Average (g) 0.5454

Initial Filter Weight (g) 0.5452

Total Particulate (mg) 0.2 ✓

MS

Analyst

METCO Environmental

Particulate Analysis EPA Method 5

Front Wash

Job Number 09-177 Location Norco, La

Job Name Valero Unit Tested TOX 1600

Desiccator Time In	740 4/22				
Desiccator Time Out	1045 4/22	810 4/23	1630 4/23		

Run No. 1	Volume (ml) 246				
Final Weight (g)	132.8887	132.8883	✓		
Initial Weight (g)	132.8787	132.8787			
Particulate Weight (g)	0.0100	0.0096			
	89				

Particulate Average (mg) 9.6
Less Acetone Blank (mg) 1.9
Total Particulate (mg) 7.7 ✓

Run No. 2	Volume (ml) 229				
Final Weight (g)	175.2314	175.2313	✓		
Initial Weight (g)	175.2123	175.2123			
Particulate Weight (g)	0.0191	0.0190			
	22				

Particulate Average (mg) 19.0
Less Acetone Blank (mg) 1.8
Total Particulate (mg) 17.2 ✓

Run No. 3	Volume (ml) 220				
Final Weight (g)	141.6896	141.6890	141.6895	✓	
Initial Weight (g)	141.6772	141.6772	141.6772		
Particulate Weight (g)	0.0124	0.0118	0.0123		
	73				

Particulate Average (mg) 12.3
Less Acetone Blank (mg) 1.7
Total Particulate (mg) 10.6 ✓

on glass

Acetone Blank ✓	Volume (ml) 254				
Final Weight (g)	168.1253	168.1248	✓		
Initial Weight (g)	168.1149	168.1149			
Difference (g)	0.0104	0.0099			
	52				

Mettler AE240

Average (mg) 9.9 ✓
* mg/l 39.0 ✓

* Note: If greater than 7.9 mg/l, use 7.9 mg/l.

Analyst

METCO ENVIRONMENTAL

LABORATORY QUALITY ASSURANCE DATA

BALANCE ID Mettler AE 240 SN K51852
cert. wts 09180701

DATE & TIME		100.0g STD	1.0g STD	.5 g STD	ANALYST	Remarks
805 4/23/09	Actual (g)	99.9999	1.0000	0.5000	mb	
	Difference (mg)	-0.1	0	0		
750 4/24	Actual (g)	100.0000	1.0001	0.5000	mb	
	Difference (mg)	0	+0.1	0		
	Actual (g)					
	Difference (mg)					
	Actual (g)					
	Difference (mg)					
	Actual (g)					
	Difference (mg)					
	Actual (g)					
	Difference (mg)					
	Actual (g)					
	Difference (mg)					
	Actual (g)					
	Difference (mg)					
	Actual (g)					
	Difference (mg)					
	Actual (g)					
	Difference (mg)					
	Actual (g)					
	Difference (mg)					

LS QA: VERSION 1 29 May 2007

METCO ENVIRONMENTAL

LABORATORY QUALITY ASSURANCE DATA

BALANCE ID Mettler AE 240 SN K51852

cert. wts 09180701

DATE & TIME		100.0g STD	1.0g STD	.5 g STD	ANALYST	Remarks
800 4/1/09	Actual (g)	100.0000	1.0001	0.5001	MB	
	Difference (mg)	0	+0.1	+0.1		
750 4/2/09	Actual (g)	99.9999	1.0000	0.5000	MB	
	Difference (mg)	-0.1	0	0		
4/10/09 1030	Actual (g)	100.0000	1.0001	0.5001	MB	
	Difference (mg)	0	+0.1	+0.1		
4/13/09 0900	Actual (g)	100.0000	1.0000	0.5000	MB	
	Difference (mg)	0	0	0		
4/14/09 1510	Actual (g)	99.9998	1.0001	0.5000	MB	
	Difference (mg)	-0.2	+0.1	0		
900 4/15/09	Actual (g)	99.9999	1.0000	0.5000	MB	
	Difference (mg)	-0.1	0	0		
800 4/16	Actual (g)	100.0000	1.0000	0.5000	MB	
	Difference (mg)	0	0	0		
830 4/17	Actual (g)	99.9999	1.0000	0.5000	MB	
	Difference (mg)	-0.1	0	0		
810 4/20/09	Actual (g)	99.9999	1.0000	0.5000	MB	
	Difference (mg)	-0.1	0	0		
840 4/21	Actual (g)	100.0000	1.0000	0.5000	MB	
	Difference (mg)	0	0	0		
805 4/22	Actual (g)	99.9999	1.0000	0.5000	MB	
	Difference (mg)	-0.1	0	0		

LS QA: VERSION 1 29 May 2007

* Skipped "Q" series

STACK FILTERS

G88 ~~SSG~~R Series

1	.4146	48
2	.4151	53
3	.4229	31
4	.4190	91
5	.4168	68
6	.4213	14
7	.4215	17
8	.4187	88
9	.4197	98
10	.4210	11
11	.4183	84
12	.4250	52
13	.4183	85
14	.4167	67
15	.4224	26
16	.4150	50
17	.4113	15
18	.4207	08
19	.4166	67
20	.4217	19
21	.4173	74
22	.4148	49
23	.4205	05
24	.4183	87
25	.4180	80
26	.4150	51
27	.4199	99
28	.4208	08
29	.4187	88
30	.4153	53
31	.4210	11
32	.4177	78
33	.4172	72
34	.4152	53
35	.4198	99
36	.4199	4200
37	.4160	61
38	.4187	88
39	.4182	83
40	.4152	53
41	.4162	63
42	.4213	14
43	.4198	98
44	.4160	60
45	.4197	97
46	.4187	87
47	.4129	30
48	.4146	49
49	.4187	87
50	.4180	81
51	.4189	89
52	.3997	99
53	.4000	01
54	.4002	04
55	.4002	06
56	.4002	05
57	.3965	67
58	.3954	55
59	.4048	50
60	.4015	16
61	.3984	84
62	.4043	43
63	.4004	04
64	.4004	04
65	.4035	35
66	.4022	22
67	.3998	99
68	.4053	53
69	.3997	98
70	.4229	29
71	.4243	44
72	0.4197	4200
73	.4211	11
74	.4218	18
75	.4186	86
76	.4239	39
77	.4228	29
78	.4201	01
79	.4026	26
80	.3997	97
81	.4028	28
82	.4054	55
83	.4038	38
84	.3997	99
85	.4045	46
86	.4047	49
87	.4032	33
88	.3984	84
89	.3999	4000
90	.4036	37
91	.4016	16
92	.4023	24
93	.4067	68
94	.4044	45
95	.4020	21
96	.4045	47
97	.4019	20
98	.4017	17
99	.4010	11
100	.3998	99
101	.3965	
102	.4019	
103	.4005	
104	.4013	
105	.4028	
106	.4009	
107	.3987	
108	.4034	
109	.4010	
110	.3987	
111	.4213	
112	.4203	
113	.4178	
114	.4204	
115	.4197	
116	.4221	
117	.4206	
118	.4239	
119	.4206	
120	.4178	
121	.4223	
122	.4219	
123	.4177	
124	.4001	
125	.4036	
126	.4043	
127	.4047	
128	.4044	
129	.4014	
130	.4014	
177	.4039	

G88R series

Initial Stack Filter Weights

Q 88mm L Series

Dessicator

Analyst mb

IN Date/ Time	12/11/09 1:33	/	/	/
OUT Date/ Time	/	/	/	/

1-7 out1 12/12 1-7 out2 12/15 #3 out3 12/17

1	0.4302	0.4305	0.
2	0.4005	0.4002	0.
3	0.4295	0.4288	0.4290
4	0.4256	0.4251	0.
5	0.4303	0.4298	0.
6	0.4235	0.4230	0.
7	0.4405	0.4401	0.
8	0.4295	0.4298	0.
9	0.3743	0.3745	0.
10	0.3790	0.3791	0.
11	0.3841	0.3845	0.
12	0.4185	0.4188	0.
13	0.4087	0.4089	0.
14	0.4093	0.4097	0.
15	0.4011	0.4009	0.
16	0.4199	0.4200	0.
17	0.3964	0.3963	0.
18	0.3839	0.3840	0.
19	0.3793	0.3794	0.
20	0.3755	0.3755	0.
21	0.4345	0.4345	0.
22	0.4355	0.4355	0.
23	0.4098	0.4098	0.
24	0.3911	0.3911	0.
25	0.5397	0.5395	0.
26	0.5404	0.5402	0.
27	0.5370	0.5368	0.
28	0.5410	0.5408	0.
29	0.5365	0.5363	0.
30	0.5300	0.5298	0.
31	0.5458	0.5456	0.
32	0.5366	0.5364	0.
33	0.5449	0.5446	0.
34	0.5365	0.5364	0.
35	0.5297	0.5296	0.
36	0.5364	0.5364	0.
37	0.5522	0.5522	0.
38	0.5312	0.5310	0.
39	0.5439	0.5438	0.
40	0.5342	0.5340	0.
41	0.5253	0.5252	0.
42	0.5269	0.5268	0.
43	0.5384	0.5383	0.
44	0.5466	0.5465	0.

45	0.5423	0.5422	0.
46	0.5378	0.5378	0.
47	0.5384	0.5383	0.
48	0.5432	0.5432	0.
49	0.5318	0.5318	0.
50	0.5453	0.5452	0.
51	0.5479	0.5474	0.
52	0.5487	0.5486	0.
53	0.5290	0.5290	0.
54	0.5407	0.5406	0.
55	0.5383	0.5382	0.
56	0.5408	0.5407	0.
57	0.5393	0.5393	0.
58	0.5484	0.5482	0.
59	0.5417	0.5416	0.
60	0.5438	0.5436	0.
61	0.5396	0.5395	0.
62	0.5373	0.5373	0.
63	0.5390	0.5388	0.
64	0.5377	0.5378	0.
65	0.5396	0.5396	0.
66	0.5456	0.5452	0.
67	0.5435	0.5434	0.
68	0.5436	0.5435	0.
69	0.5326	0.5324	0.
70	0.5404	0.5401	0.
71	0.5405	0.5402	0.
72	0.5424	0.5417	0.5418
73	0.5288	0.5288	0.
74	0.5430	0.5432	0.
75	0.5488	0.5488	0.
76	0.5209	0.5209	0.
77	0.5332	0.5333	0.
78	0.5188	0.5185	0.
79	0.5291	0.5290	0.
80	0.5192	0.5192	0.
81	0.5206	0.5206	0.
82	0.5322	0.5322	0.
83	0.5294	0.5294	0.
84	0.5240	0.5240	0.
85	0.5146	0.5145	0.
86	0.5315	0.5314	0.
87	0.5306	0.5304	0.
88	0.5363	0.5362	0.

89	0.5333	0.5331	0.
90	0.5435	0.5435	0.
91	0.5384	0.5382	0.
92	0.5364	0.5364	0.
93	0.5246	0.5245	0.
94	0.5357	0.5352	0.
95	0.5169	0.5168	0.
96	0.5358	0.5357	0.
97	0.5418	0.5412	0.5412
98	0.5363	0.5360	0.
99	0.5417	0.5417	0.
100	0.5352	0.5351	0.
101	0.5338	0.5337	0.
102	0.5393	0.5392	0.
103	0.5278	0.5277	0.
104	0.5362	0.5361	0.
105	0.5335	0.5334	0.
106	0.5479	0.5479	0.
107	0.5279	0.5277	0.
108	0.5358	0.5355	0.
109	0.5410	0.5406	0.
110	0.5237	0.5234	0.
111	0.5440	0.5437	0.
112	0.5349	0.5344	0.
113	0.5449	0.5446	0.
114	0.5329	0.5324	0.5324
115	0.5399	0.5393	0.5392
116	0.5397	0.5394	0.
117	0.5306	0.5303	0.
118	0.5411	0.5407	0.
119	0.5335	0.5332	0.
120	0.5254	0.5252	0.
121	0.5252	0.5250	0.
122	0.5430	0.5427	0.
123	0.5401	0.5399	0.
124	0.5402	0.5398	0.
125	0.5291	0.5290	0.
126	0.5079	0.5075	0.5075
127	0.5288	0.5284	0.
128	0.5280	0.5278	0.
129	0.5270	0.5268	0.
130	0.5248	0.5245	0.
131	0.5258	0.5255	0.
132	0.5300	0.5295	0.5296

ADVANTEC Filters

APPENDIX F

Reference Method Monitors Data

1600 Thermal Oxidizer
Oxides of Nitrogen
Concentration

Run Number	Measured (ppm)	Adjusted (ppm*)
1	16.15	15.98
2	15.43	15.12
3	15.21	14.85

*Calculated according to equation 7E-5.

1600 Thermal Oxidizer
Sulfur Dioxide
Concentration

Run Number	Measured (ppm)	Adjusted (ppm*)
1	9.97	9.77
2	9.62	9.49
3	9.20	8.98
4	8.83	8.69
5	10.32	10.20
6	10.23	10.21
7	11.97	11.66
8	10.61	10.25
9	10.86	10.81
10	8.35	7.82
11	8.22	7.85
12	8.13	7.98

*Calculated according to equation 7E-5.

1600 Thermal Oxidizer
Carbon Monoxide
Concentration

Run Number	Measured (ppm)	Adjusted (ppm*)
1	12.99	12.86
2	15.44	15.39
3	13.32	13.06

*Calculated according to equation 7E-5.

1600 Thermal Oxidizer
Total Hydrocarbons
Concentration

Run Number	Measured (ppm)
1	0.10
2	0.10
3	< 0.01

1600 Thermal Oxidizer
Oxygen
Concentration

Run Number	Measured (%)	Adjusted (%*)
1	12.24	12.08
2	11.61	11.57
3	11.63	11.51
4	11.76	11.60
5	11.67	11.53
6	11.73	11.54
7	11.85	11.73
8	11.85	11.67
9	11.54	11.30
10	11.59	11.44
11	11.62	11.50
12	11.68	11.51

*Calculated according to equation 7E-5.

1600 Thermal Oxidizer
Calibration Summary
Oxides of Nitrogen

Run Number	NO_x Calibration Initial Drift Check (ppm)	NO_x Calibration Final Drift Check (ppm)	NO_x Calibration Average (ppm)	NO_x Zero Initial Drift Check (ppm)	NO_x Zero Final Drift Check (ppm)	NO_x Zero Average (ppm)	Actual NO_x Calibration Value (ppm)	Actual NO_x Zero Value (ppm)
1	46.27	47.27	46.77	0.32	0.22	0.27	46.80	0.00
2	47.27	46.47	46.87	0.22	0.61	0.42	46.80	0.00
3	47.21	47.45	47.33	0.22	0.34	0.28	46.80	0.00

METCO ENVIRONMENTAL

1600 Thermal Oxidizer
Calibration Summary
Sulfur Dioxide

Run Number	SO_2 Calibration Initial Drift Check (ppm)	SO_2 Calibration Final Drift Check (ppm)	SO_2 Calibration Average (ppm)	SO_2 Zero Initial Drift Check (ppm)	SO_2 Zero Final Drift Check (ppm)	SO_2 Zero Average (ppm)	Actual SO_2 Calibration Value (ppm)	Actual SO_2 Zero Value (ppm)
1	45.36	45.61	45.49	0.00	-0.13	-0.07	44.35	0.00
2	45.61	44.42	45.02	-0.13	0.09	-0.02	44.35	0.00
3	44.84	44.18	44.51	0.34	0.12	0.23	44.35	0.00
4	44.18	44.68	44.43	0.12	0.20	0.16	44.35	0.00
5	44.68	44.34	44.51	0.20	0.02	0.11	44.35	0.00
6	44.34	44.37	44.36	0.02	0.02	0.02	44.35	0.00
7	44.37	44.41	44.39	0.02	0.80	0.41	44.35	0.00
8	44.41	44.37	44.39	0.80	0.11	0.46	44.35	0.00
9	44.37	44.21	44.29	0.11	0.04	0.08	44.35	0.00
10	43.82	44.60	44.21	0.54	0.80	0.67	44.35	0.00
11	44.60	44.24	44.42	0.80	0.07	0.44	44.35	0.00
12	44.24	44.25	44.25	0.07	0.34	0.21	44.35	0.00

METCO ENVIRONMENTAL

1600 Thermal Oxidizer
Calibration Summary
Carbon Monoxide

Run Number	CO Calibration Initial Drift Check (ppm)	CO Calibration Final Drift Check (ppm)	CO Calibration Average (ppm)	CO Zero Initial Drift Check (ppm)	CO Zero Final Drift Check (ppm)	CO Zero Average (ppm)	Actual CO Calibration Value (ppm)	Actual CO Zero Value (ppm)
1	43.14	42.62	42.88	0.18	0.04	0.11	42.70	0.00
2	42.62	42.54	42.58	0.04	0.26	0.15	42.70	0.00
3	42.99	42.64	42.82	0.33	0.31	0.32	42.70	0.00

METCO ENVIRONMENTAL

1600 Thermal Oxidizer
Calibration Summary
Oxygen

Run Number	O_2 Calibration Initial Drift Check (%)	O_2 Calibration Final Drift Check (%)	O_2 Calibration Average (%)	O_2 Zero Initial Drift Check (%)	O_2 Zero Final Drift Check (%)	O_2 Zero Average (%)	Actual O_2 Calibration Value (%)	Actual O_2 Zero Value (%)
1	12.04	11.87	11.96	0.30	0.21	0.26	11.80	0.00
2	11.87	11.80	11.84	0.21	0.30	0.26	11.80	0.00
3	11.80	12.03	11.92	0.26	0.17	0.22	11.80	0.00
4	12.03	11.89	11.96	0.17	0.28	0.23	11.80	0.00
5	11.89	11.99	11.94	0.28	0.02	0.15	11.80	0.00
6	11.99	11.99	11.99	0.02	0.33	0.18	11.80	0.00
7	11.99	11.85	11.92	0.33	0.08	0.21	11.80	0.00
8	11.85	12.11	11.98	0.08	0.28	0.18	11.80	0.00
9	12.11	11.97	12.04	0.28	0.28	0.28	11.80	0.00
10	11.97	11.92	11.95	0.21	0.06	0.14	11.80	0.00
11	11.92	11.91	11.92	0.06	0.23	0.15	11.80	0.00
12	11.91	12.03	11.97	0.23	0.38	0.31	11.80	0.00

METCO ENVIRONMENTAL

1600 Thermal Oxidizer
System Calibration Bias and Drift Data
Oxides of Nitrogen
Calibration Span = 93.40 ppm

	NO_x Calibration					NO_x Zero						
Run Number	Initial Response (ppm)	Initial Bias (%*)	Final Response (ppm)	Final Bias (%*)	Drift (%*)	Initial Response (ppm)	Initial Bias (%*)	Final Response (ppm)	Final Bias (%*)	Drift (%*)	Actual NO_x Calibration Value (ppm)	Actual NO_x Zero Value (ppm)
1	46.27	0.11	47.27	0.96	1.07	0.32	0.24	0.22	0.13	0.11	46.37	0.10
2	47.27	0.96	46.47	0.11	0.86	0.22	0.13	0.61	0.55	0.42	46.37	0.10
3	47.21	0.56	47.45	0.81	0.26	0.22	0.24	0.34	0.36	0.13	46.69	0.00

* Percent of Calibration Span

METCO ENVIRONMENTAL

1600 Thermal Oxidizer
System Calibration Bias and Drift Data
Sulfur Dioxide
Calibration Span = 93.80 ppm

	SO_2 Calibration					SO_2 Zero						
Run Number	Initial Response (ppm)	Initial Bias (%*)	Final Response (ppm)	Final Bias (%*)	Drift (%*)	Initial Response (ppm)	Initial Bias (%*)	Final Response (ppm)	Final Bias (%*)	Drift (%*)	Actual SO_2 Calibration Value (ppm)	Actual SO_2 Zero Value (ppm)
1	45.36	0.15	45.61	0.42	0.27	0.00	0.11	-0.13	0.25	0.14	45.22	0.10
2	45.61	0.42	44.42	0.85	1.27	-0.13	0.25	0.09	0.01	0.23	45.22	0.10
3	44.84	0.27	44.18	0.97	0.70	0.34	0.27	0.12	0.03	0.23	45.09	0.09
4	44.18	0.97	44.68	0.44	0.53	0.12	0.03	0.20	0.12	0.09	45.09	0.09
5	44.68	0.44	44.34	0.80	0.36	0.20	0.12	0.02	0.07	0.19	45.09	0.09
6	44.34	0.80	44.37	0.77	0.03	0.02	0.07	0.02	0.07	0.00	45.09	0.09
7	44.37	0.77	44.41	0.72	0.04	0.02	0.07	0.80	0.76	0.83	45.09	0.09
8	44.41	0.72	44.37	0.77	0.04	0.80	0.76	0.11	0.02	0.74	45.09	0.09
9	44.37	0.77	44.21	0.94	0.17	0.11	0.02	0.04	0.05	0.07	45.09	0.09
10	43.82	0.60	44.60	0.23	0.83	0.54	0.25	0.80	0.52	0.28	44.38	0.31
11	44.60	0.23	44.24	0.15	0.38	0.80	0.52	0.07	0.26	0.78	44.38	0.31
12	44.24	0.15	44.25	0.14	0.01	0.07	0.26	0.34	0.03	0.29	44.38	0.31

* Percent of Calibration Span

METCO ENVIRONMENTAL

1600 Thermal Oxidizer
System Calibration Bias and Drift Data
Carbon Monoxide
Calibration Span = 94.10 ppm

	CO Calibration					CO Zero					Actual	Actual
Run Number	Initial Response (ppm)	Initial Bias (%*)	Final Response (ppm)	Final Bias (%*)	Drift (%*)	Initial Response (ppm)	Initial Bias (%*)	Final Response (ppm)	Final Bias (%*)	Drift (%*)	CO Calibration Value (ppm)	CO Zero Value (ppm)
1	43.14	0.45	42.62	1.00	0.55	0.18	0.06	0.04	0.21	0.15	43.56	0.24
2	42.62	1.00	42.54	1.08	0.09	0.04	0.21	0.26	0.02	0.23	43.56	0.24
3	42.99	0.37	42.64	0.74	0.37	0.33	0.35	0.31	0.33	0.02	43.34	0.00

* Percent of Calibration Span

METCO ENVIRONMENTAL

1600 Thermal Oxidizer
System Calibration Bias and Drift Data
Oxygen
Calibration Span = 20.90 percent

	O_2 Calibration					O_2 Zero					Actual	Actual
Run Number	Initial Response (%)	Initial Bias (%*)	Final Response (%)	Final Bias (%*)	Drift (%*)	Initial Response (%)	Initial Bias (%*)	Final Response (%)	Final Bias (%*)	Drift (%*)	O_2 Calibration Value (%)	O_2 Zero Value (%)
1	12.04	0.57	11.87	0.24	0.81	0.30	0.81	0.21	0.38	0.43	11.92	0.13
2	11.87	0.24	11.80	0.57	0.33	0.21	0.38	0.30	0.81	0.43	11.92	0.13
3	11.80	0.33	12.03	1.44	1.10	0.26	0.81	0.17	0.38	0.43	11.73	0.09
4	12.03	1.44	11.89	0.77	0.67	0.17	0.38	0.28	0.91	0.53	11.73	0.09
5	11.89	0.77	11.99	1.24	0.48	0.28	0.91	0.02	0.33	1.24	11.73	0.09
6	11.99	1.24	11.99	1.24	0.00	0.02	0.33	0.33	1.15	1.48	11.73	0.09
7	11.99	1.24	11.85	0.57	0.67	0.33	1.15	0.08	0.05	1.20	11.73	0.09
8	11.85	0.57	12.11	1.82	1.24	0.08	0.05	0.28	0.91	0.96	11.73	0.09
9	12.11	1.82	11.97	1.15	0.67	0.28	0.91	0.28	0.91	0.00	11.73	0.09
10	11.97	1.34	11.92	1.10	0.24	0.21	0.53	0.06	0.19	0.72	11.69	0.10
11	11.92	1.10	11.91	1.05	0.05	0.06	0.19	0.23	0.62	0.81	11.69	0.10
12	11.91	1.05	12.03	1.63	0.57	0.23	0.62	0.38	1.34	0.72	11.69	0.10

* Percent of Calibration Span

METCO ENVIRONMENTAL

1600 Thermal Oxidizer
Analyzer Calibration Data
Oxides of Nitrogen

Date 04/14/09
Runs 1 & 2
Calibration Span = 93.40 ppm

Gas Range	Actual Calibration Value (ppm)	Analyzer Calibration Response (ppm)	Absolute Difference (ppm)	Difference (%*)
Low	0.00	0.10	0.10	0.11
Mid	46.80	46.37	0.43	0.46
High	93.40	93.28	0.12	0.13

* Percent of Calibration Span

1600 Thermal Oxidizer
Analyzer Calibration Data
Oxides of Nitrogen

Date 04/15/09
Run 3
Calibration Span = 93.40 ppm

Gas Range	Actual Calibration Value (ppm)	Analyzer Calibration Response (ppm)	Absolute Difference (ppm)	Difference (%*)
Low	0.00	0.00	0.00	0.00
Mid	46.80	46.69	0.11	0.12
High	93.40	93.36	0.04	0.04

* Percent of Calibration Span

1600 Thermal Oxidizer
Analyzer Calibration Data
Sulfur Dioxide

Date 04/14/08
Runs 1 & 2
Calibration Span = 93.80 ppm

Gas Range	Actual Calibration Value (ppm)	Analyzer Calibration Response (ppm)	Absolute Difference (ppm)	Difference (%*)
Low	0.00	0.10	0.10	0.11
Mid	44.35	45.22	0.87	0.93
High	93.80	93.92	0.12	0.13

* Percent of Calibration Span

1600 Thermal Oxidizer
Analyzer Calibration Data
Sulfur Dioxide

Date 04/16/09
Runs 10 - 12
Calibration Span = 93.80 ppm

Gas Range	Actual Calibration Value (ppm)	Analyzer Calibration Response (ppm)	Absolute Difference (ppm)	Difference (%*)
Low	0.00	0.31	0.31	0.33
Mid	44.35	44.48	0.13	0.14
High	93.80	94.78	0.98	1.04

* Percent of Calibration Span

1600 Thermal Oxidizer
Analyzer Calibration Data
Sulfur Dioxide

Date 04/16/09
Runs 10 - 12
Calibration Span = 93.80 ppm

Gas Range	Actual Calibration Value (ppm)	Analyzer Calibration Response (ppm)	Absolute Difference (ppm)	Difference (%*)
Low	0.00	0.31	0.31	0.33
Mid	44.35	44.48	0.13	0.14
High	93.80	94.78	0.98	1.04

* Percent of Calibration Span

1600 Thermal Oxidizer
Analyzer Calibration Data
Carbon Monoxide

Date 04/14/09
Runs 1 & 2
Calibration Span = 94.10 ppm

Gas Range	Actual Calibration Value (ppm)	Analyzer Calibration Response (ppm)	Absolute Difference (ppm)	Difference (%*)
Low	0.00	0.24	0.24	0.26
Mid	42.70	43.56	0.86	0.91
High	94.10	94.19	0.09	0.10

* Percent of Calibration Span

1600 Thermal Oxidizer
Analyzer Calibration Data
Carbon Monoxide

Date 04/15/09
Run 3
Calibration Span = 94.10 ppm

Gas Range	Actual Calibration Value (ppm)	Analyzer Calibration Response (ppm)	Absolute Difference (ppm)	Difference (%*)
Low	0.00	0.00	0.00	0.00
Mid	42.70	43.34	0.64	0.68
High	94.10	93.38	0.72	0.77

* Percent of Calibration Span

1600 Thermal Oxidizer
Analyzer Calibration Data
Total Hydrocarbons

Date 04/14/09
Runs 1 & 2
Span = 100 ppm

Gas Range	Actual Calibration Value (ppm)	Analyzer Calibration Response (ppm)	Absolute Difference (ppm)	Difference (%*)
Zero	0.00	0.02	0.02	----
Low	26.10	26.78	0.68	2.61
Mid	47.41	47.41	0.00	0.00
High	86.10	85.99	0.11	----

* Percent of calibration gas

1600 Thermal Oxidizer
Analyzer Calibration Data
Total Hydrocarbons

Date 04/15/09
Run 3
Span = 100 ppm

Gas Range	Actual Calibration Value (ppm)	Analyzer Calibration Response (ppm)	Absolute Difference (ppm)	Difference (%*)
Zero	0.00	-0.04	0.04	----
Low	26.10	25.64	0.46	1.76
Mid	47.41	47.45	0.04	0.08
High	86.10	86.12	0.02	----

* Percent of calibration gas

1600 Thermal Oxidizer
Analyzer Calibration Data
Oxygen

Date 04/14/09
Runs 1 & 2
Calibration Span = 20.90 %

Gas Range	Actual Calibration Value (%)	Analyzer Calibration Response (%)	Absolute Difference (%)	Difference (%*)
Low	0.00	0.13	0.13	0.62
Mid	11.80	11.92	0.12	0.57
High	20.90	21.04	0.14	0.67

* Percent of Calibration Span

1600 Thermal Oxidizer
Analyzer Calibration Data
Oxygen

Date 04/15/09
Runs 3 - 9
Calibration Span = 20.90 %

Gas Range	Actual Calibration Value (%)	Analyzer Calibration Response (%)	Absolute Difference (%)	Difference (%*)
Low	0.00	0.09	0.09	0.43
Mid	11.80	11.73	0.07	0.33
High	20.90	20.83	0.07	0.33

* Percent of Calibration Span

1600 Thermal Oxidizer
Analyzer Calibration Data
Oxygen

Date 04/16/09
Runs 10- 12
Calibration Span = 20.90 %

Gas Range	Actual Calibration Value (%)	Analyzer Calibration Response (%)	Absolute Difference (%)	Difference (%*)
Low	0.00	0.10	0.09	0.43
Mid	11.80	11.69	0.07	0.33
High	20.90	21.04	0.07	0.33

* Percent of Calibration Span

filename	4/14/2009	7:37:38	C:\RM\DATA\09-177.csv					
testby1	Metco Environmental							
testby2	Baton Rouge LA							
testby3	M-43							
testby4	Daniel Moore							
testfor1	Valero							
testfor2	St. Charles Refinery							
testfor3	TOX #3 1600 TOX Stack (EQT 241)							
testfor4	Norco LA							
name			1 O2	3 NOX	4 SO2	5 CO	6 THC	
sn			106423	42C-66054-351		48C-72812-	9670591	
offset			0	0	0	0	0	
fullscale			25	100	100	100	100	
train			1	1	1	1	1	
gastype			o2 3a	nox 20	so2 6c	co 10	thc 25a	
dcg1	4/14/2009	7:38:00	20.51	0.11	0.1	0.22	0.53	ALM05283
dcg1	4/14/2009	7:38:15	13.68	0.11	0.1	0.2	0.6	ALM05283
dcg1	4/14/2009	7:38:30	4.42	0.1	0.1	0.04	0.63	ALM05283
dcg1	4/14/2009	7:38:45	1.64	0.1	0.1	0.11	0.63	ALM05283
dcg1	4/14/2009	7:39:00	0.75	0.1	0.1	0.19	0.62	ALM05283
dcg1	4/14/2009	7:39:15	0.42	0.1	0.1	0.19	0.62	ALM05283
dcg1	4/14/2009	7:39:30	0.28	0.1	0.1	0.25	0.63	ALM05283
dcg1	4/14/2009	7:39:45	0.2	0.1	0.1	0.27	0.67	ALM05283
dcg1	4/14/2009	7:40:00	0.16	0.1	0.1	0.25	0.65	ALM05283
dcg1	4/14/2009	7:40:15	0.14	0.1	0.1	0.23	0.61	ALM05283
dcg1	4/14/2009	7:40:30	0.14	0.1	0.1	0.29	0.61	ALM05283
dcg1	4/14/2009	7:40:45	0.13	0.1	0.1	0.29	0.64	ALM05283
dcg1	4/14/2009	7:41:00	0.12	0.1	0.1	0.24	0.63	ALM05283
dcg1	4/14/2009	7:41:15	0.12	0.1	0.1	0.28	0.61	ALM05283
dcg1	4/14/2009	7:41:30	0.12	0.1	0.1	0.29	0.62	ALM05283
dcg1	4/14/2009	7:41:45	0.11	0.1	0.1	0.29	0.61	ALM05283
dcg1	4/14/2009	7:42:00	0.11	0.1	0.1	0.29	0.61	ALM05283
o2ezero1	4/14/2009	7:40:45	0.13	0.1	0.1	0.29	0.64	ALM05283
noxezero1	4/14/2009	7:40:45	0.13	0.1	0.1	0.29	0.64	ALM05283
so2ezero1	4/14/2009	7:41:30	0.12	0.1	0.1	0.29	0.62	ALM05283
coezero1	4/14/2009	7:41:00	0.12	0.1	0.1	0.24	0.63	ALM05283
dcg3	4/14/2009	7:42:30	1.41	0.1	0.1	0.29	0.61	BLM00148
dcg3	4/14/2009	7:42:45	1.5	4.64	0.1	0.23	0.6	BLM00148
dcg3	4/14/2009	7:43:00	0.48	28.25	0.1	0.29	0.6	BLM00148
dcg3	4/14/2009	7:43:15	0.21	69.65	0.1	0.29	0.63	BLM00148
dcg3	4/14/2009	7:43:30	0.12	86.93	0.1	0.29	0.61	BLM00148
dcg3	4/14/2009	7:43:45	0.09	92.63	0.1	0.27	0.6	BLM00148
dcg3	4/14/2009	7:44:00	0.07	92.83	0.1	0.25	0.6	BLM00148
dcg3	4/14/2009	7:44:15	0.06	92.97	0.1	0.29	0.59	BLM00148
dcg3	4/14/2009	7:44:30	0.06	93.09	0.1	0.29	0.58	BLM00148
dcg3	4/14/2009	7:44:45	0.05	93.13	0.1	0.29	0.62	BLM00148
dcg3	4/14/2009	7:45:00	0.06	93.26	0.1	0.29	0.58	BLM00148
dcg3	4/14/2009	7:45:15	0.05	93.4	0.1	0.29	0.58	BLM00148
dcg3	4/14/2009	7:45:30	0.05	93.32	0.1	0.29	0.57	BLM00148
dcg3	4/14/2009	7:45:45	0.05	93.28	0.1	0.29	0.59	BLM00148
noxhigh1	4/14/2009	7:45:45	0.05	93.28	0.1	0.29	0.59	BLM00148 3 93.4 ppm NO

dcg2	4/14/2009	7:46:00	0.05	93.37	0.1	0.29	0.57	ALM02852	
dcg2	4/14/2009	7:46:15	0.05	93.25	0.1	0.27	0.57	ALM02852	
dcg2	4/14/2009	7:46:30	0.32	83.12	0.1	0.24	0.58	ALM02852	
dcg2	4/14/2009	7:46:45	1.2	47.29	0.1	0.03	0.57	ALM02852	
dcg2	4/14/2009	7:47:00	0.4	25.21	0.1	0.09	0.58	ALM02852	
dcg2	4/14/2009	7:47:15	0.17	29.41	0.1	0.09	0.63	ALM02852	
dcg2	4/14/2009	7:47:30	0.11	40.47	0.1	0.08	0.58	ALM02852	
dcg2	4/14/2009	7:47:45	0.09	46.47	0.1	0.09	0.56	ALM02852	
dcg2	4/14/2009	7:48:00	0.08	46.4	0.1	0.09	0.57	ALM02852	
dcg2	4/14/2009	7:48:15	0.08	46.37	0.1	0.09	0.58	ALM02852	
dcg2	4/14/2009	7:48:30	0.07	46.37	0.1	0.08	0.57	ALM02852	
dcg2	4/14/2009	7:48:45	0.07	46.37	0.1	0.09	0.55	ALM02852	
dcg2	4/14/2009	7:49:00	0.07	46.3	0.1	0.08	0.56	ALM02852	
noxmid1	4/14/2009	7:48:45	0.07	46.37	0.1	0.09	0.55	ALM02852	46.8 ppm NO.
dcg5	4/14/2009	7:49:15	0.07	46.28	0.1	0.09	0.56	AAL19513	
dcg5	4/14/2009	7:49:30	1.23	46.27	0.1	1.32	0.55	AAL19513	
dcg5	4/14/2009	7:49:45	0.92	43.16	0.1	33.92	0.55	AAL19513	
dcg5	4/14/2009	7:50:00	0.3	26.83	0.1	71.49	0.55	AAL19513	
dcg5	4/14/2009	7:50:15	0.14	5.16	0.1	88.85	0.58	AAL19513	
dcg5	4/14/2009	7:50:30	0.08	0.33	0.1	90.61	0.53	AAL19513	
dcg5	4/14/2009	7:50:45	0.07	0.24	0.1	90.89	0.53	AAL19513	
dcg5	4/14/2009	7:51:00	0.06	0.23	0.1	90.95	0.53	AAL19513	
dcg5	4/14/2009	7:51:15	0.05	0.21	0.1	92.89	0.53	AAL19513	
dcg5	4/14/2009	7:51:30	0.05	0.21	0.1	94.18	0.52	AAL19513	
dcg5	4/14/2009	7:51:45	0.05	0.21	0.1	94.25	0.52	AAL19513	
dcg5	4/14/2009	7:52:00	0.05	0.21	0.1	94.23	0.53	AAL19513	
dcg5	4/14/2009	7:52:15	0.04	0.21	0.1	94.24	0.53	AAL19513	
dcg5	4/14/2009	7:52:30	0.04	0.21	0.1	94.23	0.54	AAL19513	
dcg5	4/14/2009	7:52:45	0.05	0.18	0.1	94.22	0.55	AAL19513	
dcg5	4/14/2009	7:53:00	0.04	0.12	0.1	94.2	0.51	AAL19513	
dcg5	4/14/2009	7:53:15	0.05	0.12	0.1	94.19	0.52	AAL19513	
dcg5	4/14/2009	7:53:30	0.04	0.12	0.1	94.01	0.56	AAL19513	
cohigh1	4/14/2009	7:53:15	0.05	0.12	0.1	94.19	0.52	AAL19513	94.1 ppm CO
dcg4	4/14/2009	7:53:45	1.1	0.11	0.1	92.35	0.57	ALM04147	
dcg4	4/14/2009	7:54:00	1.8	0.1	0.1	77.12	0.57	ALM04147	
dcg4	4/14/2009	7:54:15	0.52	0.15	0.1	52.85	0.56	ALM04147	
dcg4	4/14/2009	7:54:30	0.21	0.21	0.1	44.68	0.57	ALM04147	
dcg4	4/14/2009	7:54:45	0.11	0.21	0.1	43.65	0.52	ALM04147	
dcg4	4/14/2009	7:55:00	0.08	0.13	0.1	43.56	0.52	ALM04147	
dcg4	4/14/2009	7:55:15	0.07	0.1	0.1	43.49	0.51	ALM04147	
dcg4	4/14/2009	7:55:30	0.06	0.11	0.1	43.61	0.54	ALM04147	
dcg4	4/14/2009	7:55:45	0.06	0.11	0.1	43.56	0.56	ALM04147	
dcg4	4/14/2009	7:56:00	0.06	0.1	0.1	43.56	0.58	ALM04147	
dcg4	4/14/2009	7:56:15	0.06	0.11	0.1	43.56	0.58	ALM04147	
comid1	4/14/2009	7:56:00	0.06	0.1	0.1	43.56	0.58	ALM04147	42.7 ppm CO
dcg8	4/14/2009	7:56:30	0.59	0.11	0.78	43.56	0.57	BLM00508	
dcg8	4/14/2009	7:56:45	2.83	0.1	0.74	34.45	0.58	BLM00508	
dcg8	4/14/2009	7:57:00	0.86	0.1	2.96	15.05	0.57	BLM00508	
dcg8	4/14/2009	7:57:15	0.31	0.1	30.39	2.06	0.56	BLM00508	
dcg8	4/14/2009	7:57:30	0.15	0.1	69.44	0.18	0.56	BLM00508	
dcg8	4/14/2009	7:57:45	0.1	0.1	86.49	0.29	0.53	BLM00508	

dcg8	4/14/2009	7:58:00	0.07	0.1	90.23	0.35	0.55	BLM00508	
dcg8	4/14/2009	7:58:15	0.06	0.1	91.2	0.36	0.56	BLM00508	
dcg8	4/14/2009	7:58:30	0.05	0.12	91.78	0.35	0.62	BLM00508	
dcg8	4/14/2009	7:58:45	0.05	0.11	91.86	0.32	0.62	BLM00508	
dcg8	4/14/2009	7:59:00	0.05	0.12	92.39	0.33	0.62	BLM00508	
dcg8	4/14/2009	7:59:15	0.05	0.11	93.73	0.32	0.61	BLM00508	
dcg8	4/14/2009	7:59:30	0.05	0.12	93.73	0.39	0.6	BLM00508	
dcg8	4/14/2009	7:59:45	0.05	0.12	93.59	0.36	0.59	BLM00508	
dcg8	4/14/2009	8:00:00	0.05	0.11	93.87	0.35	0.58	BLM00508	
dcg8	4/14/2009	8:00:15	0.05	0.11	93.92	0.29	0.56	BLM005088	93.8ppm SO_2
so2high1	4/14/2009	8:00:15	0.05	0.11	93.92	0.29	0.56	BLM00508	
dcg6	4/14/2009	8:00:30	0.1	0.12	94.19	0.35	0.55	ALM05992	
dcg6	4/14/2009	8:00:45	3.84	0.1	94.43	0.26	0.55	ALM05992	
dcg6	4/14/2009	8:01:00	1.59	0.11	93.2	0.12	0.54	ALM05992	
dcg6	4/14/2009	8:01:15	0.55	0.21	76.99	0.03	0.57	ALM05992	
dcg6	4/14/2009	8:01:30	0.23	0.3	54.99	0.04	9.57	ALM05992	
dcg6	4/14/2009	8:01:45	0.13	0.32	47.44	0.03	0.61	ALM05992	
dcg6	4/14/2009	8:02:00	0.09	0.35	45.64	0.04	0.53	ALM05992	
dcg6	4/14/2009	8:02:15	0.05	0.32	45.36	0	0.52	ALM05992	
dcg6	4/14/2009	8:02:30	0.04	0.32	45.21	0.1	0.51	ALM05992	
dcg6	4/14/2009	8:02:45	0.03	0.32	45.55	0.12	0.5	ALM05992	
dcg6	4/14/2009	8:03:00	0.03	0.32	45.25	0.11	0.5	ALM05992	
dcg6	4/14/2009	8:03:15	0.03	0.32	45.13	0.03	0.49	ALM05992	
dcg6	4/14/2009	8:03:30	0.02	0.32	45.22	0.03	0.49	ALM05992	
dcg6	4/14/2009	8:03:45	0.02	0.32	45.48	0.02	0.49	ALM05992	ALM59290
so2mid1	4/14/2009	8:03:30	0.02	0.32	45.22	0.03	0.49	~~ALM05992~~	44.35ppm SO_2
dcg11	4/14/2009	8:04:00	0.05	0.32	45.67	0.08	0.49	AAL20005	
dcg11	4/14/2009	8:04:15	9.18	0.32	45.66	0.08	0.5	AAL20005	
dcg11	4/14/2009	8:04:30	18.56	0.31	44.35	0.01	0.53	AAL20005	
dcg11	4/14/2009	8:04:45	21.02	0.22	32.68	0.07	0.51	AAL20005	
dcg11	4/14/2009	8:05:00	21.01	0.14	14.8	0.07	0.51	AAL20005	
dcg11	4/14/2009	8:05:15	20.96	0.11	5.8	0.07	0.52	AAL20005	
dcg11	4/14/2009	8:05:30	21.04	0.11	3.4	0.07	0.51	AAL20005	
dcg11	4/14/2009	8:05:45	21.09	0.16	2.39	0.07	0.51	AAL20005	
dcg11	4/14/2009	8:06:00	21.14	0.22	1.85	0.07	0.51	AAL20005	
dcg11	4/14/2009	8:06:15	21.06	0.22	1.47	0.07	0.51	AAL20005	
dcg11	4/14/2009	8:06:30	20.94	0.14	1.43	0.07	0.51	AAL20005	
dcg11	4/14/2009	8:06:45	20.74	0.11	1.15	0.07	0.5	AAL20005	
o2high1	4/14/2009	8:05:30	21.04	0.11	3.4	0.07	0.51	AAL20005	20.9% O_2
dcg9	4/14/2009	8:07:00	20.43	0.11	1.06	0.07	0.51	ALM00690	
dcg9	4/14/2009	8:07:15	16.19	0.11	1.25	0.21	0.52	ALM00690	
dcg9	4/14/2009	8:07:30	12.73	0.11	1.01	0.35	0.52	ALM00690	
dcg9	4/14/2009	8:07:45	11.81	0.1	0.97	0.49	0.53	ALM00690	
dcg9	4/14/2009	8:08:00	11.52	0.1	0.24	0.49	46.16	ALM00690	
dcg9	4/14/2009	8:08:15	11.42	0.11	0	0.42	73.4	ALM00690	
dcg9	4/14/2009	8:08:30	11.37	0.11	0	0.49	66.45	ALM00690	
dcg9	4/14/2009	8:08:45	11.35	0.12	0	0.49	111.25	ALM00690	
dcg9	4/14/2009	8:09:00	11.35	0.12	0	0.49	89.83	ALM00690	
dcg9	4/14/2009	8:09:15	11.35	0.12	0	0.49	118.27	ALM00690	
dcg9	4/14/2009	8:09:30	11.35	0.12	0	0.49	118.27	ALM00690	
dcg9	4/14/2009	8:09:45	11.92	0.11	0	0.42	114.54	ALM00690	

dcg9	4/14/2009	8:10:00	11.92	0.11	0	0.49	55.74	ALM00690
dcg9	4/14/2009	8:10:15	11.92	0.11	0	0.49	30.12	ALM00690
dcg9	4/14/2009	8:10:30	11.93	0.11	0	0.49	22.67	ALM00690
dcg9	4/14/2009	8:10:45	11.92	0.11	0	0.49	37.81	ALM00690
dcg9	4/14/2009	8:11:00	11.93	0.11	0	0.49	35.25	ALM00690
dcg9	4/14/2009	8:11:15	11.92	0.11	0	0.49	33.35	ALM00690
dcg9	4/14/2009	8:11:30	11.93	0.11	0	0.49	32.06	ALM00690
dcg9	4/14/2009	8:11:45	11.93	0.11	0	0.49	31.08	ALM00690
o2mid1	4/14/2009	8:10:15	11.92	0.11	0	0.49	30.12	ALM00690 11.8% O2
dcg11	4/14/2009	8:12:30	18.5	0.12	0.01	0.38	28.96	AAL20005/
dcg11	4/14/2009	8:12:45	20.55	0.12	0	0.35	28.58	AAL20005/
dcg11	4/14/2009	8:13:00	21.15	0.11	0	0.21	26.08	AAL20005/
dcg11	4/14/2009	8:13:15	21.35	0.12	0	0.17	0.61	AAL20005/
dcg11	4/14/2009	8:13:30	21.42	0.12	0	0.11	0.1	AAL20005/
dcg11	4/14/2009	8:13:45	21.44	0.12	0	0.07	0	AAL20005/
dcg11	4/14/2009	8:14:00	21.45	0.12	0	0.07	0.02	AAL20005/
dcg11	4/14/2009	8:14:15	21.45	0.12	0	0.07	0.11	AAL20005/
dcg11	4/14/2009	8:14:30	21.45	0.12	0	0.08	0.14	AAL20005/
thcezero1	4/14/2009	8:14:00	21.45	0.12	0	0.07	0.02	AAL20005/
dcg14	4/14/2009	8:14:45	21.46	0.11	0	0.07	0.43	LL78615/c
dcg14	4/14/2009	8:15:00	21.5	0.12	-0.01	0.07	0.62	LL78615/c
dcg14	4/14/2009	8:15:15	21.5	0.11	0	0.07	0.75	LL78615/c
dcg14	4/14/2009	8:15:30	21.51	0.11	0	0.08	0.87	LL78615/c
dcg14	4/14/2009	8:15:45	21.53	0.12	0	0.08	0.88	LL78615/c
dcg14	4/14/2009	8:16:00	21.53	0.12	0	0.07	0.98	LL78615/c
dcg14	4/14/2009	8:16:15	21.55	0.12	0	0.08	27.2	LL78615/c
dcg14	4/14/2009	8:16:30	21.55	0.12	0	0.02	83.02	LL78615/c
dcg14	4/14/2009	8:16:45	21.55	0.12	0	0.08	86.18	LL78615/c
dcg14	4/14/2009	8:17:00	21.53	0.12	0	0.08	85.43	LL78615/c
dcg14	4/14/2009	8:17:15	21.53	0.12	0	0.08	85.33	LL78615/c
dcg14	4/14/2009	8:17:30	21.52	0.12	0	0.08	85.44	LL78615/c
dcg14	4/14/2009	8:17:45	21.52	0.12	0	0.08	85.31	LL78615/c
dcg14	4/14/2009	8:18:00	21.54	0.12	0	0.08	85.22	LL78615/c
dcg14	4/14/2009	8:18:15	21.54	0.12	0	0.07	86.14	LL78615/c
dcg14	4/14/2009	8:18:30	21.53	0.12	0	0.08	85.99	LL78615/c
dcg14	4/14/2009	8:18:45	21.53	0.12	0	0.08	85.3	LL78615/c
dcg14	4/14/2009	8:19:00	21.55	0.11	0	0.02	83.97	LL78615/c
thchigh1	4/14/2009	8:18:30	21.53	0.12	0	0.08	85.99	LL78615/c 86.1 ppm C_3H_8
dcg13	4/14/2009	8:26:00	21.76	0.12	0	0.08	85.99	LL6768/cg
dcg13	4/14/2009	8:26:15	21.76	0.12	0	0.03	85.99	LL6768/cg
dcg13	4/14/2009	8:26:30	21.76	0.12	0	0.09	57.41	LL6768/cg
dcg13	4/14/2009	8:26:45	21.75	0.12	0	0.09	47.44	LL6768/cg
dcg13	4/14/2009	8:27:00	21.75	0.12	0	0.09	47.41	LL6768/cg
dcg13	4/14/2009	8:27:15	21.75	0.12	0	0.09	47.35	LL6768/cg
thcmid1	4/14/2009	8:27:00	21.75	0.12	0	0.09	47.41	LL6768/cg 47.41 ppm C_3H_8
dcg12	4/14/2009	8:29:45	21.81	0.12	0	0.06	47.41	BLM00390
dcg12	4/14/2009	8:30:00	21.82	0.12	0	0.05	47.39	BLM00390
dcg12	4/14/2009	8:30:15	21.82	0.12	0	0.05	32.39	BLM00390
dcg12	4/14/2009	8:30:30	21.81	0.12	0	0.05	29.27	BLM00390
dcg12	4/14/2009	8:30:45	21.81	0.12	0	0.05	26.64	BLM00390
dcg12	4/14/2009	8:31:00	21.81	0.12	0	0.05	26.29	BLM00390

dcg12	4/14/2009	8:31:15	21.81	0.12	0	0.05	26.29	BLM00390	
dcg12	4/14/2009	8:31:30	21.81	0.12	0	0.05	26.33	BLM00390	
dcg12	4/14/2009	8:31:45	21.8	0.12	0	0.06	26.36	BLM00390	
dcg12	4/14/2009	8:32:00	21.81	0.12	0	0.06	26.39	BLM00390	
dcg12	4/14/2009	8:32:15	21.81	0.12	0	0.05	26.4	BLM00390	
dcg12	4/14/2009	8:32:30	21.81	0.12	0	0.05	26.39	BLM00390	
dcg12	4/14/2009	8:32:45	21.81	0.12	0	0.05	25.79	BLM00390	
dcg12	4/14/2009	8:33:00	21.85	0.12	-0.01	0.07	26.8	BLM00390	
dcg12	4/14/2009	8:33:15	21.87	0.12	0	0.07	26.78	BLM00390 5	
thclow1	4/14/2009	8:32:15	21.81	0.12	0	0.05	26.4	BLM00390 8	@ 26.1 ppm C_3H_8
dcg7	4/14/2009	8:33:45	21.9	0.12	0	0.08	22.79	NOX CON'	
dcg7	4/14/2009	8:34:00	21.9	0.12	0	0.08	22.8	NOX CON'	
dcg7	4/14/2009	8:34:15	21.9	0.12	0	0.08	22.8	NOX CON'	
dcg7	4/14/2009	8:34:30	21.9	0.12	0	0.08	22.8	NOX CON'	
dcg7	4/14/2009	8:34:45	21.9	0.12	0	0.08	22.8	NOX CON'	
dcg7	4/14/2009	8:35:00	21.9	1.29	0	0.15	22.79	NOX CON'	
dcg7	4/14/2009	8:35:15	21.9	11.28	0	0.14	14.51	NOX CON'	
dcg7	4/14/2009	8:35:30	21.9	21.9	0	0.08	0.67	NOX CON'	
dcg7	4/14/2009	8:35:45	21.9	21.9	0	0.19	0.67	NOX CON'	
dcg7	4/14/2009	8:36:00	21.9	21.9	0	0.12	0.66	NOX CON'	
dcg7	4/14/2009	8:36:15	21.9	21.9	0	0.18	0.65	NOX CON'	
dcg7	4/14/2009	8:36:30	21.9	21.9	0	0.18	0.65	NOX CON'	
dcg7	4/14/2009	8:36:45	21.9	21.9	0	0.18	0.65	NOX CON'	
dcg7	4/14/2009	8:37:00	21.9	21.8	0	0.18	0.64	NOX CON'	
dcg7	4/14/2009	8:37:15	21.8	21.8	0	0.18	0.65	NOX CON'	
dcg7	4/14/2009	8:37:30	21.8	21.9	0	0.18	0.64	NOX CON'	
dcg7	4/14/2009	8:37:45	21.8	22	0	0.18	0.65	NOX CON'	
dcg7	4/14/2009	8:38:00	21.9	22	0	0.18	0.66	NOX CON'	
dcg7	4/14/2009	8:38:15	21.9	21.9	0	0.18	0.64	NOX CON'	
dcg7	4/14/2009	8:38:30	21.9	21.9	0	0.19	0.64	NOX CON'	
dcg7	4/14/2009	8:38:45	21.8	21.9	0	0.18	0.69	NOX CON'	
dcg7	4/14/2009	8:39:00	21.9	21.9	0	0.18	0.63	NOX CON'	start conv ✓
dcg7	4/14/2009	8:39:15	22	21.9	0	0.18	0.64	NOX CON'	
dcg7	4/14/2009	8:39:30	21.9	22	0	0.18	0.63	NOX CON'	
dcg7	4/14/2009	8:39:45	21.9	21.9	0	0.19	0.64	NOX CON'	
dcg7	4/14/2009	8:40:00	21.9	21.9	0	0.18	0.63	NOX CON'	
dcg7	4/14/2009	8:40:15	21.9	21.9	0	0.19	0.64	NOX CON'	
dcg7	4/14/2009	8:40:30	21.9	21.9	0	0.18	0.63	NOX CON'	
dcg7	4/14/2009	8:40:45	21.9	21.9	0	0.18	0.62	NOX CON'	
dcg7	4/14/2009	8:41:00	21.9	21.9	0	0.18	0.63	NOX CON'	
dcg7	4/14/2009	8:41:15	21.9	21.9	0	0.19	0.62	NOX CON'	
dcg7	4/14/2009	8:41:30	21.9	22	0	0.18	0.62	NOX CON'	
dcg7	4/14/2009	8:41:45	21.9	21.9	0	0.18	0.62	NOX CON'	
dcg7	4/14/2009	8:42:00	21.9	21.9	0	0.19	0.62	NOX CON'	
dcg7	4/14/2009	8:42:15	21.9	21.9	0	0.19	0.62	NOX CON'	
dcg7	4/14/2009	8:42:30	7.29	21.9	0	0.19	0.62	NOX CON'	
dcg7	4/14/2009	8:42:45	6.98	21.9	0	0.18	0.62	NOX CON'	
dcg7	4/14/2009	8:43:00	6.68	21.9	0	0.19	0.75	NOX CON'	
dcg7	4/14/2009	8:43:15	6.41	21.9	0.01	0.19	0.61	NOX CON'	
dcg7	4/14/2009	8:43:30	6.14	21.9	0	0.18	0.62	NOX CON'	
dcg7	4/14/2009	8:43:45	5.83	21.9	0	0.19	0.62	NOX CON'	

dcg7	4/14/2009	8:44:00	5.54	21.9	0	0.18	0.61	NOX CON'
dcg7	4/14/2009	8:44:15	5.28	21.9	0	0.19	0.62	NOX CON'
dcg7	4/14/2009	8:44:30	5.03	21.9	0	0.2	0.62	NOX CON'
dcg7	4/14/2009	8:44:45	4.8	21.9	0	0.25	0.62	NOX CON'
dcg7	4/14/2009	8:45:00	4.61	21.9	0	0.19	0.62	NOX CON'
dcg7	4/14/2009	8:45:15	4.44	21.9	0	0.19	0.62	NOX CON'
dcg7	4/14/2009	8:45:30	4.28	21.9	0	0.19	0.62	NOX CON'
dcg7	4/14/2009	8:45:45	4.13	21.9	0	0.18	0.63	NOX CON'
dcg7	4/14/2009	8:46:00	4.01	21.9	0	0.19	0.63	NOX CON'
dcg7	4/14/2009	8:46:15	3.91	21.9	0	0.19	0.64	NOX CON'
dcg7	4/14/2009	8:46:30	3.8	21.8	0	0.19	0.65	NOX CON'
dcg7	4/14/2009	8:46:45	3.71	21.9	0	0.15	0.65	NOX CON'
dcg7	4/14/2009	8:47:00	3.62	21.9	0	0.17	0.66	NOX CON'
dcg7	4/14/2009	8:47:15	3.54	21.9	0	0.15	0.66	NOX CON'
dcg7	4/14/2009	8:47:30	3.48	21.9	0	0.16	0.66	NOX CON'
dcg7	4/14/2009	8:47:45	3.41	21.9	0	0.19	0.68	NOX CON'
dcg7	4/14/2009	8:48:00	3.34	21.9	0	0.19	0.67	NOX CON'
dcg7	4/14/2009	8:48:15	3.28	21.9	0	0.19	0.68	NOX CON'
dcg7	4/14/2009	8:48:30	3.22	21.9	0	0.19	0.68	NOX CON'
dcg7	4/14/2009	8:48:45	3.17	21.9	0	0.09	0.69	NOX CON'
dcg7	4/14/2009	8:49:00	3.12	21.9	0	0.16	0.7	NOX CON'
dcg7	4/14/2009	8:49:15	3.08	21.9	0	0.18	0.69	NOX CON'
dcg7	4/14/2009	8:49:30	3.04	21.9	0	0.12	0.7	NOX CON'
dcg7	4/14/2009	8:49:45	3	21.9	0	0.14	0.69	NOX CON'
dcg7	4/14/2009	8:50:00	2.97	21.9	0	0.17	0.7	NOX CON'
dcg7	4/14/2009	8:50:15	2.94	21.9	0	0.15	0.71	NOX CON'
dcg7	4/14/2009	8:50:30	2.91	21.9	0	0.14	0.69	NOX CON'
dcg7	4/14/2009	8:50:45	2.88	21.9	0	0.09	0.7	NOX CON'
dcg7	4/14/2009	8:51:00	2.85	21.9	0	0.09	0.7	NOX CON'
dcg7	4/14/2009	8:51:15	2.82	21.9	0	0.19	0.69	NOX CON'
dcg7	4/14/2009	8:51:30	2.8	21.9	0	0.19	0.7	NOX CON'
dcg7	4/14/2009	8:51:45	2.77	21.9	0	0.19	0.69	NOX CON'
dcg7	4/14/2009	8:52:00	2.75	21.9	0	0.18	0.69	NOX CON'
dcg7	4/14/2009	8:52:15	2.73	21.9	0	0.13	0.69	NOX CON'
dcg7	4/14/2009	8:52:30	2.72	21.9	0	0.12	0.68	NOX CON'
dcg7	4/14/2009	8:52:45	2.74	21.9	0	0.19	0.69	NOX CON'
dcg7	4/14/2009	8:53:00	2.75	21.9	0	0.19	0.68	NOX CON'
dcg7	4/14/2009	8:53:15	2.94	21.9	0	0.18	0.68	NOX CON'
dcg7	4/14/2009	8:53:30	3.05	21.9	0	0.19	0.68	NOX CON'
dcg7	4/14/2009	8:53:45	2.96	21.9	0	0.18	0.67	NOX CON'
dcg7	4/14/2009	8:54:00	2.81	21.9	0	0.19	0.67	NOX CON'
dcg7	4/14/2009	8:54:15	2.76	21.9	0	0.19	0.67	NOX CON'
dcg7	4/14/2009	8:54:30	2.73	21.9	0	0.19	0.67	NOX CON'
dcg7	4/14/2009	8:54:45	2.72	21.9	0	0.19	0.66	NOX CON'
dcg7	4/14/2009	8:55:00	2.7	21.9	0	0.19	0.65	NOX CON'
dcg7	4/14/2009	8:55:15	2.68	21.9	0	0.19	0.66	NOX CON'
dcg7	4/14/2009	8:55:30	2.65	21.9	0	0.19	0.65	NOX CON'
dcg7	4/14/2009	8:55:45	2.64	21.9	0	0.19	0.64	NOX CON'
dcg7	4/14/2009	8:56:00	2.63	21.9	0	0.19	0.65	NOX CON'
dcg7	4/14/2009	8:56:15	2.61	21.9	0	0.15	0.64	NOX CON'
dcg7	4/14/2009	8:56:30	2.6	21.9	0	0.09	0.64	NOX CON'

dcg7	4/14/2009	8:56:45	2.58	21.9	0	0.13	0.63 NOX CON'
dcg7	4/14/2009	8:57:00	2.58	21.9	0	0.18	0.63 NOX CON'
dcg7	4/14/2009	8:57:15	2.59	21.9	0	0.09	0.63 NOX CON'
dcg7	4/14/2009	8:57:30	2.59	21.9	0	0.16	0.62 NOX CON'
dcg7	4/14/2009	8:57:45	2.58	21.9	0	0.13	0.62 NOX CON'
dcg7	4/14/2009	8:58:00	2.57	21.9	0	0.19	0.62 NOX CON'
dcg7	4/14/2009	8:58:15	2.56	21.9	0	0.19	0.61 NOX CON'
dcg7	4/14/2009	8:58:30	2.56	21.9	0	0.19	0.62 NOX CON'
dcg7	4/14/2009	8:58:45	2.54	21.9	0	0.19	0.61 NOX CON'
dcg7	4/14/2009	8:59:00	2.53	21.9	0	0.19	0.61 NOX CON'
dcg7	4/14/2009	8:59:15	2.53	21.9	0	0.19	0.61 NOX CON'
dcg7	4/14/2009	8:59:30	2.52	21.9	0	0.19	0.6 NOX CON'
dcg7	4/14/2009	8:59:45	2.52	21.9	0	0.19	0.61 NOX CON'
dcg7	4/14/2009	9:00:00	2.4	21.9	0	0.19	0.61 NOX CON'
dcg7	4/14/2009	9:00:15	2.35	21.9	0	0.19	0.6 NOX CON'
dcg7	4/14/2009	9:00:30	2.33	21.9	0	0.12	0.62 NOX CON'
dcg7	4/14/2009	9:00:45	2.32	21.9	0	0.19	0.63 NOX CON'
dcg7	4/14/2009	9:01:00	2.31	21.9	0	0.18	0.66 NOX CON'
dcg7	4/14/2009	9:01:15	2.3	21.9	0	0.19	0.65 NOX CON'
dcg7	4/14/2009	9:01:30	2.29	21.9	0	0.19	0.62 NOX CON'
dcg7	4/14/2009	9:01:45	2.27	21.9	0	0.19	0.6 NOX CON'
dcg7	4/14/2009	9:02:00	2.25	21.9	0	0.12	0.59 NOX CON'
dcg7	4/14/2009	9:02:15	2.24	21.9	0	0.19	0.6 NOX CON'
dcg7	4/14/2009	9:02:30	2.24	21.9	0	0.19	0.57 NOX CON'
dcg7	4/14/2009	9:02:45	2.24	21.9	0	0.19	0.57 NOX CON'
dcg7	4/14/2009	9:03:00	2.24	21.9	0	0.19	0.57 NOX CON'
dcg7	4/14/2009	9:03:15	2.23	21.9	0	0.23	0.56 NOX CON'
dcg7	4/14/2009	9:03:30	2.23	21.9	0	0.22	0.57 NOX CON'
dcg7	4/14/2009	9:03:45	2.23	21.9	0	0.25	0.57 NOX CON'
dcg7	4/14/2009	9:04:00	2.23	21.9	0	0.2	0.57 NOX CON'
dcg7	4/14/2009	9:04:15	2.22	21.9	0	0.24	0.57 NOX CON'
dcg7	4/14/2009	9:04:30	2.22	21.9	0	0.19	0.57 NOX CON'
dcg7	4/14/2009	9:04:45	2.22	21.9	0	0.19	0.57 NOX CON'
dcg7	4/14/2009	9:05:00	2.21	21.9	0	0.18	0.56 NOX CON'
dcg7	4/14/2009	9:05:15	2.21	21.9	0	0.19	0.55 NOX CON'
dcg7	4/14/2009	9:05:30	2.22	21.9	0	0.19	0.56 NOX CON'
dcg7	4/14/2009	9:05:45	2.23	21.9	0	0.19	0.55 NOX CON'
dcg7	4/14/2009	9:06:00	2.24	21.9	0	0.19	0.56 NOX CON'
dcg7	4/14/2009	9:06:15	2.24	21.9	0	0.19	0.55 NOX CON'
dcg7	4/14/2009	9:06:30	2.23	21.9	0	0.19	0.55 NOX CON'
dcg7	4/14/2009	9:06:45	2.22	21.9	0	0.18	0.55 NOX CON'
dcg7	4/14/2009	9:07:00	2.22	21.9 END	0	0.18	0.55 NOX CON'
dcg7	4/14/2009	9:07:15	2.21	21.9	0	0.23	0.55 NOX CON'
dcg7	4/14/2009	9:07:30	2.21	21.9	0	0.21	0.55 NOX CON'
scg2	4/14/2009	9:09:30	22.58	0.11	0	0.19	0.57 ALM02852
scg2	4/14/2009	9:09:45	22.59	0.12	0	0.18	0.56 ALM02852
scg2	4/14/2009	9:10:00	22.6	0.11	0	0.18	0.56 ALM02852
scg2	4/14/2009	9:10:15	22.64	0.12	0	0.19	0.53 ALM02852
scg2	4/14/2009	9:10:30	22.66	0.12	0	0.2	0.53 ALM02852
scg2	4/14/2009	9:10:45	22.67	0.12	0	0.18	0.53 ALM02852
scg2	4/14/2009	9:11:00	21.34	0.11	0	0.17	0.52 ALM02852

(21.9/22.0) x 100 = 99.5%

0837.0007

scg2	4/14/2009	9:11:15	21.34	0.12	0	0.17	0.53	ALM02852
scg2	4/14/2009	9:12:15	21.37	0.11	0	0.18	0.5	ALM02852
scg2	4/14/2009	9:12:30	21.37	0.11	0	0.18	0.51	ALM02852
scg2	4/14/2009	9:12:45	21.37	0.11	0	0.17	0.5	ALM02852
scg2	4/14/2009	9:13:00	21.38	0.12	0	0.18	0.51	ALM02852
scg2	4/14/2009	9:13:15	21.37	0.11	0	0.17	0.5	ALM02852
scg2	4/14/2009	9:13:30	19.81	0.12	0	0.17	0.52	ALM02852
scg2	4/14/2009	9:13:45	13.89	1.45	0	0.18	0.51	ALM02852
scg2	4/14/2009	9:14:00	8.24	8.23	0	0.18	0.53	ALM02852
scg2	4/14/2009	9:14:15	3.69	17.51	0	0.18	0.5	ALM02852
scg2	4/14/2009	9:14:30	1.77	30.04	0	0.19	0.5	ALM02852
scg2	4/14/2009	9:14:45	1.01	38.59	0	0.19	0.5	ALM02852
scg2	4/14/2009	9:15:00	0.72	43.08	0	0.18	0.5	ALM02852
scg2	4/14/2009	9:15:15	0.58	43.68	0	0.19	0.5	ALM02852
scg2	4/14/2009	9:15:30	0.5	44	0	0.18	0.5	ALM02852
scg2	4/14/2009	9:15:45	0.45	44.08	0	0.18	0.5	ALM02852
scg2	4/14/2009	9:16:00	0.4	44.18	0	0.19	0.5	ALM02852
scg2	4/14/2009	9:16:15	0.38	44.24	0	0.18	0.5	ALM02852
scg2	4/14/2009	9:16:30	0.35	45.11	0	0.11	0.5	ALM02852
scg2	4/14/2009	9:16:45	0.32	46.16	0.58	0.14	0.5	ALM02852
scg2	4/14/2009	9:17:00	0.3	46.2	1.75	0.19	0.5	ALM02852
scg2	4/14/2009	9:17:15	0.29	46.27	0.02	0.19	0.5	ALM02852
o2zero1	4/14/2009	9:17:00	0.3	46.2	0.02	0.19	0.5	ALM02852
so2zero1	4/14/2009	9:14:15	3.69	17.51	0	0.18	0.5	ALM02852
cozero1	4/14/2009	9:14:15	3.69	17.51	0	0.18	0.5	ALM02852
noxspan1	4/14/2009	9:17:15	0.29	46.27	0.02	0.19	0.5	ALM02852
scg4	4/14/2009	9:17:45	0.27	46.34	0	0.19	0.5	ALM04147
scg4	4/14/2009	9:18:00	0.25	46.37	0	0.1	0.5	ALM04147
scg4	4/14/2009	9:18:15	0.35	46.3	0	0.08	0.5	ALM04147
scg4	4/14/2009	9:18:30	2.34	46.26	0	0.05	0.51	ALM04147
scg4	4/14/2009	9:18:45	2.45	45.2	0	2.15	0.5	ALM04147
scg4	4/14/2009	9:19:00	1.16	39.22	0	13.44	0.51	ALM04147
scg4	4/14/2009	9:19:15	0.58	26.83	0	29.35	0.5	ALM04147
scg4	4/14/2009	9:19:30	0.37	10.81	0	37.4	0.5	ALM04147
scg4	4/14/2009	9:19:45	0.28	4.17	0	39.85	0.5	ALM04147
scg4	4/14/2009	9:20:00	0.24	1.37	0	40.59	0.5	ALM04147
scg4	4/14/2009	9:20:15	0.22	0.97	0	40.84	0.5	ALM04147
scg4	4/14/2009	9:20:30	0.21	0.79	0	40.86	0.5	ALM04147
scg4	4/14/2009	9:20:45	0.2	0.72	0	40.95	0.49	ALM04147
scg4	4/14/2009	9:21:00	0.2	0.58	0	40.96	0.5	ALM04147
scg4	4/14/2009	9:21:15	0.19	0.51	0	41.05	0.48	ALM04147
scg4	4/14/2009	9:21:30	0.19	0.48	0	41.13	0.5	ALM04147
scg4	4/14/2009	9:21:45	0.18	0.42	0	41.15	0.5	ALM04147
scg4	4/14/2009	9:22:00	0.18	0.42	0	41.16	0.5	ALM04147
scg4	4/14/2009	9:22:15	0.18	0.42	0	41.25	0.51	ALM04147
scg4	4/14/2009	9:22:30	0.17	0.32	0	41.36	0.52	ALM04147
scg4	4/14/2009	9:22:45	0.17	0.32	0	43.14	0.54	ALM04147
scg4	4/14/2009	9:23:00	0.17	0.32	0	43.21	0.54	ALM04147
scg4	4/14/2009	9:23:15	0.16	0.25	0	43.14	0.58	ALM04147
scg4	4/14/2009	9:23:30	0.17	0.22	0	43.16	0.52	ALM04147
scg4	4/14/2009	9:23:45	0.17	0.22	0	43.24	0.51	ALM04147

noxzero1	4/14/2009	9:22:30	0.17	0.32	0	41.36	0.52	ALM04147
cospan1	4/14/2009	9:23:15	0.16	0.25	0	43.14	0.58	ALM04147
scg6	4/14/2009	9:24:00	0.17	0.22	0	43.22	0.53	ALM05992
scg6	4/14/2009	9:24:15	0.16	0.22	0	43.19	0.58	ALM05992
scg6	4/14/2009	9:24:30	0.16	0.22	0	43.31	0.51	ALM05992
scg6	4/14/2009	9:24:45	0.45	0.22	0	43.12	0.48	ALM05992
scg6	4/14/2009	9:25:00	1.35	0.22	0.1	41.54	0.48	ALM05992
scg6	4/14/2009	9:25:15	0.89	0.22	0	34.85	0.48	ALM05992
scg6	4/14/2009	9:25:30	0.43	0.36	0	20.06	0.48	ALM05992
scg6	4/14/2009	9:25:45	0.26	0.55	5.28	7.49	0.47	ALM05992
scg6	4/14/2009	9:26:00	0.2	0.74	30.47	2.71	0.48	ALM05992
scg6	4/14/2009	9:26:15	0.18	0.71	39.63	1.21	0.51	ALM05992
scg6	4/14/2009	9:26:30	0.16	0.71	43.82	0.81	0.56	ALM05992
scg6	4/14/2009	9:26:45	0.16	0.71	45.36	0.63	0.62	ALM05992
scg6	4/14/2009	9:27:00	0.15	0.68	46.35	0.53	0.57	ALM05992
scg6	4/14/2009	9:27:15	0.15	0.61	47.15	0.42	0.61	ALM05992
scg6	4/14/2009	9:27:30	0.15	0.61	47.59	0.33	0.6	ALM05992
scg6	4/14/2009	9:27:45	0.15	0.61	47.94	0.26	0.6	ALM05992
scg6	4/14/2009	9:28:00	0.15	0.61	48.34	0.21	0.58	ALM05992
scg6	4/14/2009	9:28:15	0.14	0.61	48.49	0.21	0.57	ALM05992
scg6	4/14/2009	9:28:30	0.14	0.61	48.6	0.19	0.57	ALM05992
scg6	4/14/2009	9:28:45	0.15	0.56	48.9	0.1	0.58	ALM05992
scg6	4/14/2009	9:29:00	0.14	0.54	48.65	0.1	0.58	ALM05992
scg6	4/14/2009	9:29:15	0.15	0.53	48.66	0.1	0.59	ALM05992
scg6	4/14/2009	9:29:30	0.14	0.53	48.75	0.1	0.58	ALM05992
scg6	4/14/2009	9:29:45	0.14	0.54	48.76	0.1	0.57	ALM05992
scg6	4/14/2009	9:30:00	0.15	0.54	49.18	0.1	0.58	ALM05992
scg6	4/14/2009	9:30:15	0.14	0.52	45.59	0.1	0.58	ALM05992
scg6	4/14/2009	9:30:30	0.14	0.55	43.75	0.01	0.58	ALM05992
scg6	4/14/2009	9:30:45	0.14	0.55	43.99	0.05	0.56	ALM05992
scg6	4/14/2009	9:31:00	0.14	0.54	44.04	0.03	0.58	ALM05992
scg6	4/14/2009	9:31:15	0.15	0.55	44.13	0.1	0.58	ALM05992
scg6	4/14/2009	9:31:30	0.14	0.55	45.5	0.01	0.57	ALM05992
scg6	4/14/2009	9:31:45	0.14	0.57	45.71	0	0.57	ALM05992
so2span1	4/14/2009	9:26:45	0.16	0.71	45.36	0.63	0.62	ALM05992
scg9	4/14/2009	9:32:00	0.14	0.55	44.61	0	0.56	ALM00690
scg9	4/14/2009	9:32:15	0.14	0.56	44.58	0.06	0.57	ALM00690
scg9	4/14/2009	9:32:30	0.16	0.53	44.79	0.01	0.57	ALM00690
scg9	4/14/2009	9:32:45	1.9	0.51	44.78	0	0.5	ALM00690
scg9	4/14/2009	9:33:00	4.43	0.47	44.93	0.02	0.5	ALM00690
scg9	4/14/2009	9:33:15	7.33	0.42	45.41	0.07	0.51	ALM00690
scg9	4/14/2009	9:33:30	10.23	0.38	44.32	0.07	0.5	ALM00690
scg9	4/14/2009	9:33:45	11.52	0.31	36.32	0.12	0.5	ALM00690
scg9	4/14/2009	9:34:00	12.02	0.22	25.18	0.3	0.5	ALM00690
scg9	4/14/2009	9:34:15	12.22	0.13	17.18	0.36	0.5	ALM00690
scg9	4/14/2009	9:34:30	12.09	0.11	13.77	0.47	0.51	ALM00690
scg9	4/14/2009	9:34:45	11.88	0.11	12.54	0.49	0.5	ALM00690
scg9	4/14/2009	9:35:00	11.98	0.11	12.07	0.49	0.51	ALM00690
scg9	4/14/2009	9:35:15	12.04	0.11	11.36	0.49	0.5	ALM00690
o2span1	4/14/2009	9:35:15	12.04	0.11	11.36	0.49	0.5	ALM00690
scg13	4/14/2009	9:35:30	12.46	0.11	11.05	0.46	0.51	LL6768/cg

scg13	4/14/2009	9:35:45	12.88	0.11	11.01	0.49	0.5	LL6768/cg
scg13	4/14/2009	9:36:00	13.17	0.12	10.8	0.49	0.53	LL6768/cg
scg13	4/14/2009	9:36:15	15.64	0.12	10.77	0.49	0.51	LL6768/cg
scg13	4/14/2009	9:36:30	18.8	0.11	10.9	0.48	0.57	LL6768/cg
scg13	4/14/2009	9:36:45	20.38	0.19	13.18	0.43	2.31	LL6768/cg
scg13	4/14/2009	9:37:00	20.88	0.36	17.8	0.38	28.1	LL6768/cg
scg13	4/14/2009	9:37:15	21.17	0.42	20.77	0.33	45.48	LL6768/cg
scg13	4/14/2009	9:37:30	21.29	0.42	20.1	0.29	47.37	LL6768/cg
scg13	4/14/2009	9:37:45	21.4	0.42	18.13	0.29	47.37	LL6768/cg
scg13	4/14/2009	9:38:00	21.35	0.38	15.74	0.28	47.37	LL6768/cg
scg13	4/14/2009	9:38:15	21.51	0.32	14.26	0.29	47.38	LL6768/cg
thcspan1	4/14/2009	9:38:00	21.35	0.38	15.74	0.28	47.37	LL6768/cg
scg9	4/14/2009	9:38:45	21.51	0.32	12.91	0.29	47.37	ALM00690
scg9	4/14/2009	9:40:45	21.82	0.22	11.35	0.24	47.18	ALM00690
scg9	4/14/2009	9:41:00	21.87	0.22	10.92	0.19	6.52	ALM00690
scg9	4/14/2009	9:41:15	22.02	0.22	10.66	0.24	1.84	ALM00690
scg9	4/14/2009	9:41:30	22.06	0.22	10.53	0.26	0.15	ALM00690
scg9	4/14/2009	9:41:45	21.97	0.22	10.59	0.17	0.23	ALM00690
scg9	4/14/2009	9:42:00	21.88	0.22	10.36	0.17	0.26	ALM00690
scg9	4/14/2009	9:42:15	21.71	0.22	10.37	0.23	0.25	ALM00690
scg9	4/14/2009	9:42:30	21.7	0.22	10.61	0.17	0.24	ALM00690
thczero1	4/14/2009	9:42:30	21.7	0.22	10.61	0.17	0.24	ALM00690
STRAT	4/14/2009	11:41:45	12.82	16.27	9.61	12.57	0.58	
STRAT	4/14/2009	11:42:00	12.8	16.27	9.39	12.15	0.61	
STRAT	4/14/2009	11:42:15	12.78	16.3	9.17	11.26	0.67	
STRAT	4/14/2009	11:42:30	12.78	16.36	9.16	10.95	0.67	
STRAT	4/14/2009	11:42:45	12.79	16.36	9.17	11.28	0.69	
STRAT	4/14/2009	11:43:00	12.8	16.36	9.27	11.91	0.69	
STRAT	4/14/2009	11:43:15	12.79	16.32	9.37	12.35	0.68	
STRAT	4/14/2009	11:43:30	12.78	16.25	9.3	12.16	0.63	
STRAT	4/14/2009	11:43:45	12.76	16.17	9.28	11.77	0.66	
STRAT	4/14/2009	11:44:00	12.76	16.17	9.38	11.68	0.63	
STRAT	4/14/2009	11:44:15	12.71	16.17	9.25	11.41	0.59	
STRAT	4/14/2009	11:44:30	12.71	16.17	8.96	10.92	0.65	
STRAT	4/14/2009	11:44:45	12.72	16.21	8.95	10.99	0.64	
STRAT	4/14/2009	11:45:00	12.71	16.27	9.03	11.09	0.65	
STRAT	4/14/2009	11:45:15	12.71	16.27	9.15	11.23	0.65	
STRAT	4/14/2009	11:45:30	12.72	16.19	9.17	11.53	0.66	
STRAT	4/14/2009	11:45:45	12.73	16.17	9.13	11.7	0.67	
STRAT	4/14/2009	11:46:00	12.73	16.17	9.25	11.61	0.65	
STRAT	4/14/2009	11:46:15	12.71	16.17	9.16	11.18	0.64	
STRAT	4/14/2009	11:46:30	12.71	16.17	9.25	10.99	0.64	
STRAT	4/14/2009	11:46:45	12.72	16.17	9.36	11.17	0.63	
STRAT	4/14/2009	11:47:00	12.72	16.17	9.32	11.19	0.61	
STRAT	4/14/2009	11:47:15	12.73	16.17	9.16	11.08	0.61	
STRAT	4/14/2009	11:47:30	12.73	16.24	9.09	11.04	0.6	
STRAT	4/14/2009	11:47:45	12.75	16.26	9.14	11.23	0.58	
STRAT	4/14/2009	11:48:00	12.77	16.25	9.1	11.56	0.58	
STRAT	4/14/2009	11:48:15	12.77	16.17	9.13	11.72	0.57	
STRAT	4/14/2009	11:48:30	12.79	16.17	9.04	12.05	0.55	
STRAT	4/14/2009	11:48:45	12.79	16.17	9	12.19	0.55	

STRAT	4/14/2009	11:49:00	12.77	16.17	9.09	12.13	0.54
STRAT	4/14/2009	11:49:15	12.77	16.17	9.23	11.79	0.54
STRAT	4/14/2009	11:49:30	12.78	16.17	9.37	11.67	0.53
STRAT	4/14/2009	11:49:45	12.78	16.17	9.47	11.99	0.52
STRAT	4/14/2009	11:50:00	12.8	16.26	9.49	12.03	0.52
STRAT	4/14/2009	11:50:15	12.81	16.27	9.34	12.25	0.51
STRAT	4/14/2009	11:50:30	12.82	16.25	9.42	12.28	0.53
STRAT	4/14/2009	11:50:45	12.81	16.22	9.56	12.16	0.53
STRAT	4/14/2009	11:51:00	12.79	16.27	9.5	11.97	0.49
STRAT	4/14/2009	11:51:15	12.78	16.26	9.43	11.7	0.45
STRAT	4/14/2009	11:51:30	12.78	16.27	9.37	11.5	0.42
STRAT	4/14/2009	11:51:45	12.78	16.27	9.23	11.29	0.42
STRAT	4/14/2009	11:52:00	12.78	16.26	9.25	11.35	0.41
STRAT	4/14/2009	11:52:15	12.79	16.27	9.09	11.52	0.43
STRAT	4/14/2009	11:52:30	12.82	16.27	9.03	11.86	0.44
STRAT	4/14/2009	11:52:45	12.82	16.26	9.15	12.31	0.44
STRAT	4/14/2009	11:53:00	12.78	16.26	9.1	12.21	0.44
run1	4/14/2009	11:57:30	12.91	16.35	8.48	8.72	0.1
run1	4/14/2009	11:57:45	12.99	16.36	8.5	9.41	0.1
run1	4/14/2009	11:58:00	13.2	16.29	8.54	11.02	0.1
run1	4/14/2009	11:58:15	13.15	16.27	8.68	13.03	0.1
run1	4/14/2009	11:58:30	13.12	16.2	8.99	13.14	0.1
run1	4/14/2009	11:58:45	13.11	16.27	9.3	12.23	0.1
run1	4/14/2009	11:59:00	13.08	16.34	9.23	11.88	0.1
run1	4/14/2009	11:59:15	13.07	16.41	9.11	11.95	0.1
run1	4/14/2009	11:59:30	13.06	16.46	9.03	11.81	0.1
run1	4/14/2009	11:59:45	13.06	16.46	9.01	11.68	0.1
run1	4/14/2009	12:00:00	13.06	16.54	8.98	11.66	0.1
run1	4/14/2009	12:00:15	13.07	16.56	9.02	11.82	0.1
run1	4/14/2009	12:00:30	13.08	16.48	8.97	12.47	0.1
run1	4/14/2009	12:00:45	13.07	16.46	8.89	12.93	0.1
run1	4/14/2009	12:01:00	13.07	16.46	8.93	12.96	0.1
run1	4/14/2009	12:01:15	13.08	16.46	8.91	12.66	0.1
run1	4/14/2009	12:01:30	13.09	16.46	9.16	12.64	0.1
run1	4/14/2009	12:01:45	13.08	16.46	9.17	12.68	0.1
run1	4/14/2009	12:02:00	13.08	16.46	9.29	12.62	0.1
run1	4/14/2009	12:02:15	13.07	16.46	9.38	12.46	0.1
run1	4/14/2009	12:02:30	13.06	16.44	9.23	12.38	0.1
run1	4/14/2009	12:02:45	13.05	16.36	9.11	12.38	0.1
run1	4/14/2009	12:03:00	13.04	16.38	9.17	12.38	0.1
run1	4/14/2009	12:03:15	13.04	16.46	9.37	12.5	0.1
run1	4/14/2009	12:03:30	13.02	16.46	9.4	12.58	0.1
run1	4/14/2009	12:03:45	12.99	16.41	9.3	12.31	0.1
run1	4/14/2009	12:04:00	13	16.36	9.3	11.96	0.1
run1	4/14/2009	12:04:15	13	16.36	9.41	12.05	0.1
run1	4/14/2009	12:04:30	12.98	16.36	9.43	12.28	0.1
run1	4/14/2009	12:04:45	12.98	16.36	9.3	12.1	0.1
run1	4/14/2009	12:05:00	12.96	16.36	9.37	12.15	0.1
run1	4/14/2009	12:05:15	12.95	16.36	9.38	12.31	0.1
run1	4/14/2009	12:05:30	12.94	16.35	9.27	12.32	0.1
run1	4/14/2009	12:05:45	12.93	16.26	9.36	12.4	0.1

run1	4/14/2009	12:06:00	12.92	16.27	9.51	12.6	0.1
run1	4/14/2009	12:06:15	12.91	16.21	9.53	12.84	0.1
run1	4/14/2009	12:06:30	12.87	16.17	9.44	13.07	0.1
run1	4/14/2009	12:06:45	12.79	16.17	9.45	12.81	0.1
run1	4/14/2009	12:07:00	12.78	16.17	9.34	12.54	0.1
run1	4/14/2009	12:07:15	12.78	16.22	9.31	13.02	0.1
run1	4/14/2009	12:07:30	12.77	16.25	9.27	13.28	0.1
run1	4/14/2009	12:07:45	12.16	16.17	9.16	13.01	0.1
run1	4/14/2009	12:08:00	12.13	16.17	9.39	13.23	0.1
run1	4/14/2009	12:08:15	12.12	16.17	9.44	13.9	0.1
run1	4/14/2009	12:08:30	12.09	16.08	9.49	13.65	0.1
run1	4/14/2009	12:08:45	12.06	16.07	9.49	13.15	0.1
run1	4/14/2009	12:09:00	12.05	16.07	9.53	12.85	0.1
run1	4/14/2009	12:09:15	12.04	16.12	9.51	12.65	0.1
run1	4/14/2009	12:09:30	12.04	16.17	9.45	12.4	0.1
run1	4/14/2009	12:09:45	12.04	16.17	9.43	12.22	0.1
run1	4/14/2009	12:10:00	12.04	16.15	9.38	12.35	0.1
run1	4/14/2009	12:10:15	12.04	16.07	9.38	12.74	0.1
run1	4/14/2009	12:10:30	12.04	15.99	9.36	12.95	0.1
run1	4/14/2009	12:10:45	12.05	15.97	9.47	13.05	0.1
run1	4/14/2009	12:11:00	12.06	15.97	9.58	12.93	0.1
run1	4/14/2009	12:11:15	12.06	15.97	9.78	12.92	0.1
run1	4/14/2009	12:11:30	12.07	15.95	9.77	13.11	0.1
run1	4/14/2009	12:11:45	12.06	15.87	9.84	13.28	0.1
run1	4/14/2009	12:12:00	12.04	15.89	9.75	13.28	0.1
run1	4/14/2009	12:12:15	12.05	15.97	9.7	13.19	0.1
run1	4/14/2009	12:12:30	12.05	15.95	9.58	13.25	0.1
run1	4/14/2009	12:12:45	12.05	15.87	9.56	13.46	0.1
run1	4/14/2009	12:13:00	12.06	15.87	9.49	13.53	0.1
run1	4/14/2009	12:13:15	12.06	15.87	9.5	13.58	0.1
run1	4/14/2009	12:13:30	12.05	15.87	9.59	13.59	0.1
run1	4/14/2009	12:13:45	12.06	15.87	9.6	13.65	0.1
run1	4/14/2009	12:14:00	12.08	15.87	9.51	14.12	0.1
run1	4/14/2009	12:14:15	12.09	15.87	9.4	14.68	0.1
run1	4/14/2009	12:14:30	12.07	15.87	9.43	14.36	0.1
run1	4/14/2009	12:14:45	12.1	15.87	9.55	13.66	0.1
run1	4/14/2009	12:15:00	12.1	15.96	9.55	13.13	0.1
run1	4/14/2009	12:15:15	12.12	15.97	9.6	12.99	0.1
run1	4/14/2009	12:15:30	12.14	15.97	9.53	13.12	0.1
run1	4/14/2009	12:15:45	12.14	16.02	9.48	12.62	0.1
run1	4/14/2009	12:16:00	12.11	16.07	9.45	11.95	0.1
run1	4/14/2009	12:16:15	12.12	16.07	9.52	11.49	0.1
run1	4/14/2009	12:16:30	12.15	16.09	9.48	11.86	0.1
run1	4/14/2009	12:16:45	12.18	16.17	9.6	12.68	0.1
run1	4/14/2009	12:17:00	12.2	16.08	9.66	13.02	0.1
run1	4/14/2009	12:17:15	12.21	16.07	9.61	13.12	0.1
run1	4/14/2009	12:17:30	12.25	16.07	9.63	13.32	0.1
run1	4/14/2009	12:17:45	12.26	16.07	9.57	13.38	0.1
run1	4/14/2009	12:18:00	12.26	16.07	9.52	13.44	0.1
run1	4/14/2009	12:18:15	12.26	16.07	9.59	13.66	0.1
run1	4/14/2009	12:18:30	12.25	16.07	9.64	13.46	0.1

run1	4/14/2009	12:18:45	12.25	16.08	9.64	13.23	0.1
run1	4/14/2009	12:19:00	12.24	16.09	9.69	12.97	0.1
run1	4/14/2009	12:19:15	12.24	16.17	9.74	12.58	0.1
run1	4/14/2009	12:19:30	12.23	16.17	9.64	12.19	0.1
run1	4/14/2009	12:19:45	12.21	16.22	9.65	11.56	0.1
run1	4/14/2009	12:20:00	12.25	16.29	9.55	11.29	0.1
run1	4/14/2009	12:20:15	12.29	16.36	9.41	11.78	0.1
run1	4/14/2009	12:20:30	12.3	16.34	9.38	12.15	0.1
run1	4/14/2009	12:20:45	12.29	16.26	9.52	12.28	0.1
run1	4/14/2009	12:21:00	12.28	16.26	9.59	12.28	0.1
run1	4/14/2009	12:21:15	12.27	16.26	9.58	12.25	0.1
run1	4/14/2009	12:21:30	12.25	16.26	9.62	12.06	0.1
run1	4/14/2009	12:21:45	12.26	16.32	9.36	12.05	0.1
run1	4/14/2009	12:22:00	12.27	16.36	9.36	12.25	0.1
run1	4/14/2009	12:22:15	12.28	16.31	9.26	12.32	0.1
run1	4/14/2009	12:22:30	12.31	16.26	9.07	12.51	0.1
run1	4/14/2009	12:22:45	12.3	16.32	9.11	12.61	0.1
run1	4/14/2009	12:23:00	12.28	16.34	9.21	12.61	0.1
run1	4/14/2009	12:23:15	12.28	16.26	9.32	12.74	0.1
run1	4/14/2009	12:23:30	12.27	16.29	9.24	12.55	0.1
run1	4/14/2009	12:23:45	12.28	16.36	9.12	12.55	0.1
run1	4/14/2009	12:24:00	12.27	16.45	8.98	12.67	0.1
run1	4/14/2009	12:24:15	12.26	16.4	9.13	12.48	0.1
run1	4/14/2009	12:24:30	12.28	16.38	9.25	12.22	0.1
run1	4/14/2009	12:24:45	12.29	16.46	9.41	12.35	0.1
run1	4/14/2009	12:25:00	12.28	16.46	9.49	12.54	0.1
run1	4/14/2009	12:25:15	12.28	16.46	9.53	12.58	0.1
run1	4/14/2009	12:25:30	12.26	16.46	9.55	12.65	0.1
run1	4/14/2009	12:25:45	12.25	16.4	9.52	12.48	0.1
run1	4/14/2009	12:26:00	12.27	16.38	9.65	12.07	0.1
run1	4/14/2009	12:26:15	12.29	16.46	9.97	11.98	0.1
run1	4/14/2009	12:26:30	12.29	16.44	10.26	12.32	0.1
run1	4/14/2009	12:26:45	12.29	16.36	10.36	12.35	0.1
run1	4/14/2009	12:27:00	12.3	16.36	10.24	12.48	0.1
run1	4/14/2009	12:27:15	12.28	16.36	10.2	12.81	0.1
run1	4/14/2009	12:27:30	12.26	16.36	10.11	12.89	0.1
run1	4/14/2009	12:27:45	12.25	16.36	9.91	13.02	0.1
run1	4/14/2009	12:28:00	12.24	16.36	9.94	12.95	0.1
run1	4/14/2009	12:28:15	12.24	16.36	10.04	12.78	0.1
run1	4/14/2009	12:28:30	12.25	16.36	10.08	13	0.1
run1	4/14/2009	12:28:45	12.24	16.36	10.05	13.38	0.1
run1	4/14/2009	12:29:00	12.22	16.36	10.07	13.38	0.1
run1	4/14/2009	12:29:15	12.2	16.36	10.03	13.17	0.1
run1	4/14/2009	12:29:30	12.18	16.36	10	12.77	0.1
run1	4/14/2009	12:29:45	12.17	16.36	9.96	12.61	0.1
run1	4/14/2009	12:30:00	12.16	16.33	10	12.98	0.1
run1	4/14/2009	12:30:15	12.17	16.26	10.06	13.78	0.1
run1	4/14/2009	12:30:30	12.17	16.17	10.04	14.23	0.1
run1	4/14/2009	12:30:45	12.12	16.17	10.1	13.66	0.1
run1	4/14/2009	12:31:00	12.12	16.19	10.1	13.14	0.1
run1	4/14/2009	12:31:15	12.14	16.26	10.19	13.6	0.1

run1	4/14/2009	12:31:30	12.15	16.18	10.19	14.39	0.1
run1	4/14/2009	12:31:45	12.15	16.11	10.09	14.85	0.1
run1	4/14/2009	12:32:00	12.13	16.16	9.97	14.41	0.1
run1	4/14/2009	12:32:15	12.13	16.17	9.91	13.99	0.1
run1	4/14/2009	12:32:30	12.1	16.14	9.95	13.99	0.1
run1	4/14/2009	12:32:45	12.06	16.07	9.98	13.59	0.1
run1	4/14/2009	12:33:00	12.05	16.1	9.92	12.8	0.1
run1	4/14/2009	12:33:15	12.06	16.22	9.87	12.21	0.1
run1	4/14/2009	12:33:30	12.09	16.27	10.02	12.35	0.1
run1	4/14/2009	12:33:45	12.1	16.21	10.01	13.52	0.1
run1	4/14/2009	12:34:00	12.09	16.05	10.08	14.26	0.1
run1	4/14/2009	12:34:15	12.08	15.97	10.16	14.42	0.1
run1	4/14/2009	12:34:30	12.08	15.97	10.04	14.22	0.1
run1	4/14/2009	12:34:45	12.06	15.97	10.09	13.68	0.1
run1	4/14/2009	12:35:00	12.04	15.97	10.23	13.18	0.1
run1	4/14/2009	12:35:15	12.03	15.97	10.22	12.71	0.1
run1	4/14/2009	12:35:30	12.04	16	10.28	12.74	0.1
run1	4/14/2009	12:35:45	12.06	16.07	10.35	13.34	0.1
run1	4/14/2009	12:36:00	12.09	15.98	10.23	13.83	0.1
run1	4/14/2009	12:36:15	12.09	15.97	10.22	14.16	0.1
run1	4/14/2009	12:36:30	12.08	15.88	10.26	14.02	0.1
run1	4/14/2009	12:36:45	12.07	15.8	10.5	13.93	0.1
run1	4/14/2009	12:37:00	12.06	15.79	10.49	13.98	0.1
run1	4/14/2009	12:37:15	12.04	15.87	10.42	13.62	0.1
run1	4/14/2009	12:37:30	12.02	15.87	10.31	13.13	0.1
run1	4/14/2009	12:37:45	12.01	15.87	10.33	12.84	0.1
run1	4/14/2009	12:38:00	12.03	15.96	10.41	13.07	0.1
run1	4/14/2009	12:38:15	12.05	15.97	10.52	13.79	0.1
run1	4/14/2009	12:38:30	12.02	15.88	10.7	13.84	0.1
run1	4/14/2009	12:38:45	12.02	15.87	10.67	13.55	0.1
run1	4/14/2009	12:39:00	12.02	15.85	10.64	13.63	0.1
run1	4/14/2009	12:39:15	12.02	15.77	10.58	13.72	0.1
run1	4/14/2009	12:39:30	12.03	15.77	10.53	13.61	0.1
run1	4/14/2009	12:39:45	12.06	15.83	10.59	14.19	0.1
run1	4/14/2009	12:40:00	12.06	15.84	10.59	14.63	0.1
run1	4/14/2009	12:40:15	12.06	15.75	10.63	14.3	0.1
run1	4/14/2009	12:40:30	12.07	15.79	10.69	13.76	0.1
run1	4/14/2009	12:40:45	12.05	15.87	10.57	13.09	0.1
run1	4/14/2009	12:41:00	12.04	15.96	10.47	12.41	0.1
run1	4/14/2009	12:41:15	12.03	15.97	10.48	11.69	0.1
run1	4/14/2009	12:41:30	12.03	16.06	10.47	11.36	0.1
run1	4/14/2009	12:41:45	12.05	16.07	10.67	11.43	0.1
run1	4/14/2009	12:42:00	12.08	16.07	10.7	11.98	0.1
run1	4/14/2009	12:42:15	12.08	16.07	10.58	12.25	0.1
run1	4/14/2009	12:42:30	12.09	16.07	10.43	12.12	0.1
run1	4/14/2009	12:42:45	12.1	16.01	10.49	12.17	0.1
run1	4/14/2009	12:43:00	12.12	15.97	10.37	12.44	0.1
run1	4/14/2009	12:43:15	12.12	15.97	10.43	12.68	0.1
run1	4/14/2009	12:43:30	12.14	15.97	10.43	12.84	0.1
run1	4/14/2009	12:43:45	12.17	15.96	10.44	13.29	0.1
run1	4/14/2009	12:44:00	12.19	15.97	10.54	13.72	0.1

run1	4/14/2009	12:44:15	12.2	15.97	10.54	13.96	0.1
run1	4/14/2009	12:44:30	12.21	15.98	10.51	13.83	0.1
run1	4/14/2009	12:44:45	12.21	15.97	10.47	13.86	0.1
run1	4/14/2009	12:45:00	12.21	16	10.5	13.79	0.1
run1	4/14/2009	12:45:15	12.19	16.07	10.42	13.62	0.1
run1	4/14/2009	12:45:30	12.18	16.07	10.34	13.25	0.1
run1	4/14/2009	12:45:45	12.15	16.07	10.27	12.71	0.1
run1	4/14/2009	12:46:00	12.15	16.1	10.31	12.46	0.1
run1	4/14/2009	12:46:15	12.2	16.17	10.45	13.01	0.1
run1	4/14/2009	12:46:30	12.21	16.06	10.46	13.85	0.1
run1	4/14/2009	12:46:45	12.21	16.06	10.47	14.01	0.1
run1	4/14/2009	12:47:00	12.2	16.1	10.58	13.66	0.1
run1	4/14/2009	12:47:15	12.18	16.17	10.64	13.21	0.1
run1	4/14/2009	12:47:30	12.17	16.17	10.61	13.09	0.1
run1	4/14/2009	12:47:45	12.17	16.17	10.62	13.17	0.1
run1	4/14/2009	12:48:00	12.17	16.26	10.72	13.36	0.1
run1	4/14/2009	12:48:15	12.16	16.2	10.58	13.44	0.1
run1	4/14/2009	12:48:30	12.14	16.17	10.59	13.14	0.1
run1	4/14/2009	12:48:45	12.13	16.17	10.5	12.7	0.1
run1	4/14/2009	12:49:00	12.11	16.2	10.6	12.5	0.1
run1	4/14/2009	12:49:15	12.12	16.26	10.51	12.38	0.1
run1	4/14/2009	12:49:30	12.13	16.26	10.51	12.7	0.1
run1	4/14/2009	12:49:45	12.14	16.26	10.51	13.07	0.1
run1	4/14/2009	12:50:00	12.13	16.17	10.43	13.29	0.1
run1	4/14/2009	12:50:15	12.08	16.17	10.42	12.68	0.1
run1	4/14/2009	12:50:30	12.07	16.26	10.41	11.89	0.1
run1	4/14/2009	12:50:45	12.07	16.32	10.36	11.55	0.1
run1	4/14/2009	12:51:00	12.08	16.39	10.4	11.27	0.1
run1	4/14/2009	12:51:15	12.14	16.46	10.51	11.57	0.1
run1	4/14/2009	12:51:30	12.18	16.43	10.62	12.17	0.1
run1	4/14/2009	12:51:45	12.19	16.36	10.57	13.14	0.1
run1	4/14/2009	12:52:00	12.17	16.26	10.49	13.59	0.1
run1	4/14/2009	12:52:15	12.12	16.2	10.5	13.37	0.1
run1	4/14/2009	12:52:30	12.08	16.17	10.55	12.87	0.1
run1	4/14/2009	12:52:45	12.08	16.23	10.45	12.27	0.1
run1	4/14/2009	12:53:00	12.06	16.26	10.46	11.93	0.1
run1	4/14/2009	12:53:15	12.06	16.26	10.46	11.96	0.1
run1	4/14/2009	12:53:30	12.07	16.26	10.44	12.17	0.1
run1	4/14/2009	12:53:45	12.08	16.27	10.47	12.46	0.1
run1	4/14/2009	12:54:00	12.1	16.27	10.58	12.93	0.1
run1	4/14/2009	12:54:15	12.1	16.27	10.68	13.41	0.1
run1	4/14/2009	12:54:30	12.08	16.17	10.47	13.59	0.1
run1	4/14/2009	12:54:45	12.06	16.17	10.58	13.59	0.1
run1	4/14/2009	12:55:00	12.08	16.17	10.6	13.88	0.1
run1	4/14/2009	12:55:15	12.08	16.17	10.63	14.55	0.1
run1	4/14/2009	12:55:30	12.06	16.07	10.77	14.86	0.1
run1	4/14/2009	12:55:45	12.05	16.07	10.71	14.85	0.1
run1	4/14/2009	12:56:00	12.03	16.07	10.5	14.66	0.1
run1	4/14/2009	12:56:15	11.99	16.07	10.51	14.07	0.1
run1	4/14/2009	12:56:30	11.99	16.07	10.49	13.65	0.1
run1	4/14/2009	12:56:45	11.99	16.07	10.71	13.34	0.1

run1	4/14/2009	12:57:00	11.99	16.07	10.72	13.1	0.1	
run1	4/14/2009	12:57:15	12	16.07	10.63	12.78	0.1	
run1	4/14/2009	12:57:30	12.01	16.07	10.68	13.06	0.1	
run1	4/14/2009	12:57:45	12.02	16	10.66	13.67	0.1	
run1	4/14/2009	12:58:00	12.03	15.94	10.76	14.11	0.1	
run1	4/14/2009	12:58:15	12.01	15.87	10.74	13.98	0.1	
run1	4/14/2009	12:58:30	12.01	15.87	10.77	13.8	0.1	
run1	4/14/2009	12:58:45	12	15.87	10.71	13.7	0.1	
run1	4/14/2009	12:59:00	11.99	15.87	10.67	13.34	0.1	
run1	4/14/2009	12:59:15	11.98	15.87	10.69	12.87	0.1	
run1	4/14/2009	12:59:30	12.05	15.9	10.88	12.22	0.1	
run1	4/14/2009	12:59:45	12.16	16.03	10.98	11.33	0.1	
run1	4/14/2009	13:00:00	12.19	16.1	10.81	11.35	0.1	
run1	4/14/2009	13:00:15	12.19	16.1	10.72	12.06	0.1	
run1	4/14/2009	13:00:30	12.19	16.04	10.68	12.62	0.1	
run1	4/14/2009	13:00:45	12.21	15.97	10.57	13.15	0.1	
averun1	4/14/2009	12:00:00	12.24	16.15	9.97	12.99	0.1	60
scg2	4/14/2009	13:02:45	12.13	15.97	10.9	11.85	0.52	ALM02852
scg2	4/14/2009	13:03:00	12.13	16.07	10.93	11.42	0.53	ALM02852
scg2	4/14/2009	13:03:15	12.2	16.07	10.85	12.66	0.54	ALM02852
scg2	4/14/2009	13:03:30	12.17	15.86	10.83	13.42	0.54	ALM02852
scg2	4/14/2009	13:03:45	9.07	15.25	10.76	10.48	0.56	ALM02852
scg2	4/14/2009	13:04:00	4.28	14.74	10.5	5.58	0.54	ALM02852
scg2	4/14/2009	13:04:15	1.98	16.4	9.9	1.98	0.54	ALM02852
scg2	4/14/2009	13:04:30	1.16	22.97	9.1	0.63	0.54	ALM02852
scg2	4/14/2009	13:04:45	0.68	27.29	8.57	0.16	0.53	ALM02852
scg2	4/14/2009	13:05:00	0.48	28.85	8.03	0.02	-0.09	ALM02852
scg2	4/14/2009	13:05:15	0.41	36.46	7.86	0.04	0.19	ALM02852
scg2	4/14/2009	13:05:30	0.36	45.84	7.86	0.08	0.2	ALM02852
scg2	4/14/2009	13:05:45	0.33	46.48	7.9	0.08	0.19	ALM02852
scg2	4/14/2009	13:06:00	0.3	46.7	7.85	0.09	0.2	ALM02852
scg2	4/14/2009	13:06:15	0.27	46.9	7.82	0.18	0.2	ALM02852
scg2	4/14/2009	13:06:30	0.23	47.11	7.75	0.18	0.19	ALM02852
scg2	4/14/2009	13:06:45	0.21	47.17	7.75	0.18	0.19	ALM02852
scg2	4/14/2009	13:07:00	0.19	47.27	5.15	0.19	0.19	ALM02852
scg2	4/14/2009	13:07:15	0.18	47.27	-0.07	0.28	0.18	ALM02852
scg2	4/14/2009	13:07:30	0.16	47.28	-0.13	0.29	0.18	ALM02852
scg2	4/14/2009	13:07:45	0.15	47.33	-0.17	0.28	0.18	ALM02852
o2zero1	4/14/2009	13:06:45	0.21	47.17	7.75	0.18	0.19	ALM02852
so2zero1	4/14/2009	13:07:30	0.16	47.28	-0.13	0.29	0.18	ALM02852
cozero1	4/14/2009	13:05:15	0.41	36.46	7.86	0.04	0.19	ALM02852
noxspan1	4/14/2009	13:07:00	0.19	47.27	5.15	0.19	0.19	ALM02852
scg4	4/14/2009	13:08:00	0.14	47.4	-0.31	0.28	0.18	ALM04147
scg4	4/14/2009	13:08:15	0.13	47.46	-0.27	0.28	0.19	ALM04147
scg4	4/14/2009	13:08:30	0.13	47.46	-0.27	0.28	0.19	ALM04147
scg4	4/14/2009	13:08:45	0.15	47.47	-0.18	0.28	0.18	ALM04147
scg4	4/14/2009	13:09:00	1.47	47.47	-0.15	0.13	0.18	ALM04147
scg4	4/14/2009	13:09:15	5.08	46.21	0.01	3.11	0.18	ALM04147
scg4	4/14/2009	13:09:30	7.29	41.16	-0.04	7.31	0.19	ALM04147
scg4	4/14/2009	13:09:45	8.37	35.07	0.19	10.41	0.18	ALM04147
scg4	4/14/2009	13:10:00	8.88	29.23	0.78	11.52	0.2	ALM04147

scg4	4/14/2009	13:10:15	9.1	27.15	1.48	11.61	0.19	ALM04147
scg4	4/14/2009	13:10:30	9.22	26.35	1.93	11.65	0.19	ALM04147
scg4	4/14/2009	13:10:45	9.27	26.09	2.42	11.92	0.19	ALM04147
scg4	4/14/2009	13:11:00	9.3	25.89	2.58	12.17	0.18	ALM04147
scg4	4/14/2009	13:11:15	9.32	25.74	2.68	12.63	0.18	ALM04147
scg4	4/14/2009	13:11:30	9.33	25.63	2.77	13.23	0.19	ALM04147
scg4	4/14/2009	13:11:45	9.29	25.62	2.9	13.38	0.19	ALM04147
scg4	4/14/2009	13:12:00	7.14	25.52	3.11	13.16	0.19	ALM04147
scg4	4/14/2009	13:12:15	3.44	26.02	3.17	17.73	0.19	ALM04147
scg4	4/14/2009	13:12:30	1.57	26.17	2.81	29.74	0.19	ALM04147
scg4	4/14/2009	13:12:45	0.85	18.28	2.08	39.49	0.18	ALM04147
scg4	4/14/2009	13:13:00	0.58	6.15	1.27	42.87	0.18	ALM04147
scg4	4/14/2009	13:13:15	0.45	2.41	0.79	43.63	0.18	ALM04147
scg4	4/14/2009	13:13:30	0.37	1.46	0.45	42.57	0.19	ALM04147
scg4	4/14/2009	13:13:45	0.32	1.18	0.29	42.42	0.2	ALM04147
scg4	4/14/2009	13:14:00	0.28	0.96	0.03	42.62	0.2	ALM04147
cospan1	4/14/2009	13:14:00	0.28	0.96	0.03	42.62	0.2	ALM04147
scg9	4/14/2009	13:14:15	0.26	0.83	0.01	42.68	0.18	ALM00690
scg9	4/14/2009	13:14:30	0.24	0.77	0.09	42.75	0.18	ALM00690
scg9	4/14/2009	13:14:45	0.22	0.7	0.08	42.88	0.18	ALM00690
scg9	4/14/2009	13:15:00	0.26	0.61	0.08	42.83	0.19	ALM00690
scg9	4/14/2009	13:15:15	1.58	0.61	0.14	40.27	0.2	ALM00690
scg9	4/14/2009	13:15:30	5.25	0.71	0.24	29.26	0.2	ALM00690
scg9	4/14/2009	13:15:45	7.66	0.71	0.5	13.19	0.2	ALM00690
scg9	4/14/2009	13:16:00	8.61	0.58	0.51	4.7	0.2	ALM00690
scg9	4/14/2009	13:16:15	8.98	0.44	0.42	1.29	0.22	ALM00690
scg9	4/14/2009	13:16:30	9.68	0.28	0.37	0.28	0.21	ALM00690
scg9	4/14/2009	13:16:45	11.81	0.22	0.25	0.12	0.2	ALM00690
scg9	4/14/2009	13:17:00	11.85	0.22	0.18	0.35	0.2	ALM00690
scg9	4/14/2009	13:17:15	11.87	0.22	0.16	0.43	0.19	ALM00690
thczero1	4/14/2009	13:15:00	0.26	0.61	0.08	42.83	0.19	ALM00690
o2span1	4/14/2009	13:17:15	11.87	0.22	0.16	0.43	0.19	ALM00690
scg4	4/14/2009	13:17:30	11.9	0.22	0.22	0.49	0.18	ALM04147
scg4	4/14/2009	13:17:45	11.91	0.22	0.29	0.49	0.19	ALM04147
scg4	4/14/2009	13:18:00	11.91	0.22	0.23	0.56	0.2	ALM04147
noxzero1	4/14/2009	13:18:00	11.91	0.22	0.23	0.56	0.2	ALM04147
scg6	4/14/2009	13:18:30	9.4	0.22	0.28	3.4	0.23	ALM05992
scg6	4/14/2009	13:18:45	4.43	0.29	0.12	16.92	0.24	ALM05992
scg6	4/14/2009	13:19:00	3.59	0.32	0.11	29.43	0.22	ALM05992
scg6	4/14/2009	13:19:15	5.35	1.73	0.12	31.2	0.24	ALM05992
scg6	4/14/2009	13:19:30	2.93	6.56	0.15	26.9	0.24	ALM05992
scg6	4/14/2009	13:19:45	1.36	7.5	0.11	16.12	0.24	ALM05992
scg6	4/14/2009	13:20:00	0.79	4.1	1.95	6.09	0.24	ALM05992
scg6	4/14/2009	13:20:15	0.55	1.9	6.11	1.56	0.23	ALM05992
scg6	4/14/2009	13:20:30	0.45	0.87	10.15	0.63	0.23	ALM05992
scg6	4/14/2009	13:20:45	0.38	0.72	12.7	0.26	0.23	ALM05992
scg6	4/14/2009	13:21:00	0.34	0.61	14.01	0.12	0.23	ALM05992
scg6	4/14/2009	13:21:15	0.31	0.61	14.65	0.1	0.23	ALM05992
scg6	4/14/2009	13:21:30	0.28	0.61	15.05	0.02	0.24	ALM05992
scg6	4/14/2009	13:21:45	0.26	0.54	15.33	0	0.24	ALM05992
scg6	4/14/2009	13:22:00	0.24	0.51	15.6	0.01	0.25	ALM05992

scg6	4/14/2009	13:22:15	0.22	0.51	15.63	0.04	0.24	ALM05992
scg6	4/14/2009	13:22:30	0.21	0.51	15.68	0.01	0.35	ALM05992
scg6	4/14/2009	13:22:45	0.19	0.51	15.7	0.08	1.34	ALM05992
scg6	4/14/2009	13:23:00	0.18	0.51	15.48	0.08	2.11	ALM05992
scg6	4/14/2009	13:23:15	0.18	0.51	15.43	0.08	1.79	ALM05992
scg6	4/14/2009	13:23:30	0.17	0.51	15.66	0.07	1.36	ALM05992
scg6	4/14/2009	13:23:45	0.17	0.51	39.68	0.08	0.6	ALM05992
scg6	4/14/2009	13:24:00	0.16	0.52	45.48	0.1	0.52	ALM05992
scg6	4/14/2009	13:24:15	0.16	0.53	45.59	0.18	0.45	ALM05992
scg6	4/14/2009	13:24:30	0.15	0.54	45.71	0.16	0.42	ALM05992
scg6	4/14/2009	13:24:45	0.15	0.56	45.61	0.07	0.43	ALM05992
so2span1	4/14/2009	13:24:45	0.15	0.56	45.61	0.07	0.43	ALM05992
scg13	4/14/2009	13:25:00	0.15	0.54	45.73	0.14	0.41	LL6768/cg
scg13	4/14/2009	13:25:15	0.15	0.45	46.11	0.13	24.22	LL6768/cg
scg13	4/14/2009	13:25:30	0.15	0.42	45.96	0.16	26.69	LL6768/cg
scg13	4/14/2009	13:25:45	0.84	0.43	45.79	0.23	73.42	LL6768/cg
scg13	4/14/2009	13:26:00	5.12	0.72	45.96	3.38	-40.24	LL6768/cg
scg13	4/14/2009	13:26:15	8.85	3.69	45.32	8.65	30.84	LL6768/cg
scg13	4/14/2009	13:26:30	10.41	11.94	39.02	12.29	45.13	LL6768/cg
scg13	4/14/2009	13:26:45	11.01	18.41	30.11	13.5	47.07	LL6768/cg
scg13	4/14/2009	13:27:00	11.26	21.11	23.74	13.75	46.97	LL6768/cg
scg13	4/14/2009	13:27:15	11.36	22	19.7	13.43	46.99	LL6768/cg
scg13	4/14/2009	13:27:30	11.41	22.43	18.11	12.92	46.93	LL6768/cg
scg13	4/14/2009	13:27:45	11.44	22.69	17.33	12.67	46.84	LL6768/cg
thcspan1	4/14/2009	13:27:15	11.36	22	19.7	13.43	46.99	LL6768/cg
run2	4/14/2009	14:41:15	11.44	15.38	9.99	16.49	0.01	
run2	4/14/2009	14:41:30	11.44	15.37	9.87	16.09	0	
run2	4/14/2009	14:41:45	11.42	15.37	9.64	15.76	0	
run2	4/14/2009	14:42:00	11.41	15.37	9.5	15.84	0.01	
run2	4/14/2009	14:42:15	11.41	15.34	9.53	16.22	0	
run2	4/14/2009	14:42:30	11.42	15.27	9.79	16.87	0	
run2	4/14/2009	14:42:45	11.41	15.27	10.09	16.8	0.1	
run2	4/14/2009	14:43:00	11.41	15.27	10.32	16.71	0.1	
run2	4/14/2009	14:43:15	11.42	15.24	10.55	16.91	0.1	
run2	4/14/2009	14:43:30	11.41	15.17	10.83	16.62	0.1	
run2	4/14/2009	14:43:45	11.4	15.17	11.2	16.06	0.1	
run2	4/14/2009	14:44:00	11.39	15.17	11.03	15.45	0.1	
run2	4/14/2009	14:44:15	11.41	15.17	10.8	15.39	0.1	
run2	4/14/2009	14:44:30	11.42	15.24	9.99	15.44	0.1	
run2	4/14/2009	14:44:45	11.43	15.27	9.9	15.32	0.1	
run2	4/14/2009	14:45:00	11.45	15.27	10.37	15.37	0.1	
run2	4/14/2009	14:45:15	11.46	15.27	10.96	15.57	0.1	
run2	4/14/2009	14:45:30	11.46	15.27	10.98	15.67	0.1	
run2	4/14/2009	14:45:45	11.48	15.17	11	15.84	0.1	
run2	4/14/2009	14:46:00	11.48	15.17	10.97	16.17	0.1	
run2	4/14/2009	14:46:15	11.47	15.2	10.95	16.25	0.1	
run2	4/14/2009	14:46:30	11.49	15.27	10.42	16.53	0.1	
run2	4/14/2009	14:46:45	11.49	15.16	10.29	16.95	0.1	
run2	4/14/2009	14:47:00	11.49	15.17	10.3	16.78	0.1	
run2	4/14/2009	14:47:15	11.51	15.2	9.76	17.08	0.1	
run2	4/14/2009	14:47:30	11.54	15.27	9.88	17.53	0.1	

run2	4/14/2009	14:47:45	11.54	15.27	9.9	17.4	0.1
run2	4/14/2009	14:48:00	11.53	15.27	10.37	17.55	0.1
run2	4/14/2009	14:48:15	11.55	15.27	10.17	17.98	0.1
run2	4/14/2009	14:48:30	11.57	15.27	10.3	18.49	0.1
run2	4/14/2009	14:48:45	11.54	15.27	10.15	17.9	0.1
run2	4/14/2009	14:49:00	11.54	15.27	10.05	16.82	0.1
run2	4/14/2009	14:49:15	11.54	15.3	10.13	16.66	0.1
run2	4/14/2009	14:49:30	11.54	15.37	10.34	16.93	0.1
run2	4/14/2009	14:49:45	11.54	15.37	10.4	16.48	0.1
run2	4/14/2009	14:50:00	11.56	15.37	10.03	16.09	0.1
run2	4/14/2009	14:50:15	11.56	15.37	9.66	15.73	0.1
run2	4/14/2009	14:50:30	11.56	15.37	9.92	15.19	0.1
run2	4/14/2009	14:50:45	11.58	15.41	9.86	15.06	0.1
run2	4/14/2009	14:51:00	11.59	15.4	9.8	14.61	0.1
run2	4/14/2009	14:51:15	11.61	15.41	9.55	14.76	0.1
run2	4/14/2009	14:51:30	11.61	15.46	9.31	15.38	0.1
run2	4/14/2009	14:51:45	11.61	15.37	9.87	15.3	0.1
run2	4/14/2009	14:52:00	11.62	15.37	10.39	14.7	0.1
run2	4/14/2009	14:52:15	11.62	15.37	10.39	14.51	0.1
run2	4/14/2009	14:52:30	11.64	15.37	10.68	14.53	0.1
run2	4/14/2009	14:52:45	11.68	15.4	10.38	14.82	0.1
run2	4/14/2009	14:53:00	11.68	15.4	10.08	15.21	0.1
run2	4/14/2009	14:53:15	11.65	15.37	10.41	14.57	0.1
run2	4/14/2009	14:53:30	11.65	15.44	10.77	13.82	0.1
run2	4/14/2009	14:53:45	11.64	15.51	10.48	13.61	0.1
run2	4/14/2009	14:54:00	11.65	15.57	10.43	14.19	0.1
run2	4/14/2009	14:54:15	11.63	15.58	10.64	14.44	0.1
run2	4/14/2009	14:54:30	11.64	15.5	10.77	13.93	0.1
run2	4/14/2009	14:54:45	11.66	15.6	10.77	13.38	0.1
run2	4/14/2009	14:55:00	11.67	15.66	10.61	13.05	0.1
run2	4/14/2009	14:55:15	11.69	15.7	10.32	13.18	0.1
run2	4/14/2009	14:55:30	11.7	15.77	10.45	13.74	0.1
run2	4/14/2009	14:55:45	11.71	15.66	10.23	14.46	0.1
run2	4/14/2009	14:56:00	11.72	15.6	10.15	14.94	0.1
run2	4/14/2009	14:56:15	11.74	15.57	10.28	14.89	0.1
run2	4/14/2009	14:56:30	11.75	15.57	9.78	15.03	0.1
run2	4/14/2009	14:56:45	11.75	15.57	9.52	15.17	0.1
run2	4/14/2009	14:57:00	11.75	15.58	9.58	15.38	0.1
run2	4/14/2009	14:57:15	11.71	15.66	9.48	15.37	0.1
run2	4/14/2009	14:57:30	11.65	15.66	9.37	15.2	0.1
run2	4/14/2009	14:57:45	11.64	15.66	9.53	14.96	0.1
run2	4/14/2009	14:58:00	11.66	15.67	9.54	15.53	0.1
run2	4/14/2009	14:58:15	11.66	15.63	9.24	16.55	0.1
run2	4/14/2009	14:58:30	11.65	15.57	9.27	16.81	0.1
run2	4/14/2009	14:58:45	11.61	15.58	9.36	16.02	0.1
run2	4/14/2009	14:59:00	11.61	15.58	9.23	15.39	0.1
run2	4/14/2009	14:59:15	11.62	15.67	9.44	15.25	0.1
run2	4/14/2009	14:59:30	11.6	15.67	9.8	14.81	0.1
run2	4/14/2009	14:59:45	11.61	15.67	9.67	14.48	0.1
run2	4/14/2009	15:00:00	11.61	15.67	9.7	14.19	0.1
run2	4/14/2009	15:00:15	11.62	15.67	9.88	14.17	0.1

run2	4/14/2009	15:00:30	11.61	15.67	9.75	14.09	0.1
run2	4/14/2009	15:00:45	11.63	15.67	9.48	14.27	0.1
run2	4/14/2009	15:01:00	11.63	15.67	9.24	14.59	0.1
run2	4/14/2009	15:01:15	11.61	15.67	9.33	14.82	0.1
run2	4/14/2009	15:01:30	11.6	15.6	9.66	14.77	0.1
run2	4/14/2009	15:01:45	11.6	15.57	9.24	14.53	0.1
run2	4/14/2009	15:02:00	11.62	15.57	8.39	14.29	0.1
run2	4/14/2009	15:02:15	11.64	15.6	7.7	14.62	0.1
run2	4/14/2009	15:02:30	11.63	15.67	7.98	14.7	0.1
run2	4/14/2009	15:02:45	11.59	15.67	8.22	13.79	0.1
run2	4/14/2009	15:03:00	11.57	15.67	8.07	12.94	0.1
run2	4/14/2009	15:03:15	11.58	15.76	8.47	13.25	0.1
run2	4/14/2009	15:03:30	11.59	15.77	8.46	13.75	0.1
run2	4/14/2009	15:03:45	11.6	15.73	8.66	13.73	0.1
run2	4/14/2009	15:04:00	11.61	15.67	8.72	14.45	0.1
run2	4/14/2009	15:04:15	11.59	15.66	8.93	15.69	0.1
run2	4/14/2009	15:04:30	11.56	15.6	8.96	15.75	0.1
run2	4/14/2009	15:04:45	11.56	15.57	9.07	15.26	0.1
run2	4/14/2009	15:05:00	11.55	15.57	9.5	15.24	0.1
run2	4/14/2009	15:05:15	11.55	15.57	9.69	14.78	0.1
run2	4/14/2009	15:05:30	11.56	15.58	9.47	14.67	0.1
run2	4/14/2009	15:05:45	11.55	15.67	9.35	15	0.1
run2	4/14/2009	15:06:00	11.55	15.66	9.14	14.98	0.1
run2	4/14/2009	15:06:15	11.53	15.63	9.35	15.09	0.1
run2	4/14/2009	15:06:30	11.54	15.57	9.44	15.6	0.1
run2	4/14/2009	15:06:45	11.55	15.47	9.48	16.3	0.1
run2	4/14/2009	15:07:00	11.55	15.47	9.38	16.77	0.1
run2	4/14/2009	15:07:15	11.56	15.43	9.53	17.05	0.1
run2	4/14/2009	15:07:30	11.57	15.37	9.92	17.35	0.1
run2	4/14/2009	15:07:45	11.57	15.37	9.92	17.6	0.1
run2	4/14/2009	15:08:00	11.56	15.37	10.03	17.33	0.1
run2	4/14/2009	15:08:15	11.54	15.48	10.05	16.75	0.1
run2	4/14/2009	15:08:30	11.52	15.47	10.4	16.38	0.1
run2	4/14/2009	15:08:45	11.51	15.47	10.38	16	0.1
run2	4/14/2009	15:09:00	11.51	15.47	9.94	15.7	0.1
run2	4/14/2009	15:09:15	11.52	15.36	9.5	15.57	0.1
run2	4/14/2009	15:09:30	11.5	15.37	9.5	15.11	0.1
run2	4/14/2009	15:09:45	11.49	15.41	10	14.07	0.1
run2	4/14/2009	15:10:00	11.51	15.48	10.24	13.5	0.1
run2	4/14/2009	15:10:15	11.54	15.47	10.58	13.7	0.1
run2	4/14/2009	15:10:30	11.57	15.47	10.56	14.49	0.1
run2	4/14/2009	15:10:45	11.6	15.47	10.73	15.45	0.1
run2	4/14/2009	15:11:00	11.61	15.4	10.62	16.44	0.1
run2	4/14/2009	15:11:15	11.63	15.37	10.52	16.91	0.1
run2	4/14/2009	15:11:30	11.62	15.37	10.74	16.92	0.1
run2	4/14/2009	15:11:45	11.62	15.37	10.83	16.66	0.1
run2	4/14/2009	15:12:00	11.61	15.36	10.42	16.09	0.1
run2	4/14/2009	15:12:15	11.6	15.4	10.36	15.51	0.1
run2	4/14/2009	15:12:30	11.61	15.47	10.38	15.63	0.1
run2	4/14/2009	15:12:45	11.63	15.47	10.62	15.87	0.1
run2	4/14/2009	15:13:00	11.64	15.48	10.87	16.15	0.1

run2	4/14/2009	15:13:15	11.63	15.53	10.87	16.08	0.1
run2	4/14/2009	15:13:30	11.61	15.48	10.88	14.98	0.1
run2	4/14/2009	15:13:45	11.6	15.57	10.62	14.14	0.1
run2	4/14/2009	15:14:00	11.59	15.57	10.22	13.75	0.1
run2	4/14/2009	15:14:15	11.6	15.58	10.01	13.69	0.1
run2	4/14/2009	15:14:30	11.61	15.58	9.85	13.78	0.1
run2	4/14/2009	15:14:45	11.62	15.63	9.83	14.06	0.1
run2	4/14/2009	15:15:00	11.63	15.57	9.67	14.23	0.1
run2	4/14/2009	15:15:15	11.63	15.57	9.6	14.35	0.1
run2	4/14/2009	15:15:30	11.65	15.57	9.52	14.97	0.1
run2	4/14/2009	15:15:45	11.65	15.57	9.44	15.63	0.1
run2	4/14/2009	15:16:00	11.66	15.56	9.56	16.42	0.1
run2	4/14/2009	15:16:15	11.64	15.47	9.88	16.91	0.1
run2	4/14/2009	15:16:30	11.62	15.47	9.93	16.49	0.1
run2	4/14/2009	15:16:45	11.62	15.47	9.75	15.83	0.1
run2	4/14/2009	15:17:00	11.61	15.47	9.71	15.28	0.1
run2	4/14/2009	15:17:15	11.59	15.47	9.77	14.55	0.1
run2	4/14/2009	15:17:30	11.58	15.56	10.05	13.71	0.1
run2	4/14/2009	15:17:45	11.59	15.67	10	13.26	0.1
run2	4/14/2009	15:18:00	11.62	15.67	9.56	13.38	0.1
run2	4/14/2009	15:18:15	11.63	15.62	9.81	14.12	0.1
run2	4/14/2009	15:18:30	11.66	15.58	9.83	15.12	0.1
run2	4/14/2009	15:18:45	11.67	15.58	10.2	15.58	0.1
run2	4/14/2009	15:19:00	11.68	15.58	10.02	15.71	0.1
run2	4/14/2009	15:19:15	11.69	15.57	10.15	15.75	0.1
run2	4/14/2009	15:19:30	11.66	15.57	10.03	15.48	0.1
run2	4/14/2009	15:19:45	11.57	15.57	9.96	14.76	0.1
run2	4/14/2009	15:20:00	11.57	15.65	9.92	14.53	0.1
run2	4/14/2009	15:20:15	11.6	15.66	9.9	15.57	0.1
run2	4/14/2009	15:20:30	11.61	15.59	10.11	16.46	0.1
run2	4/14/2009	15:20:45	11.61	15.47	10.14	16.17	0.1
run2	4/14/2009	15:21:00	11.6	15.48	10.3	15.62	0.1
run2	4/14/2009	15:21:15	11.61	15.57	10.5	15.61	0.1
run2	4/14/2009	15:21:30	11.6	15.57	10.2	15.87	0.1
run2	4/14/2009	15:21:45	11.62	15.48	9.65	16	0.1
run2	4/14/2009	15:22:00	11.63	15.47	8.99	16.22	0.1
run2	4/14/2009	15:22:15	11.63	15.51	8.88	15.92	0.1
run2	4/14/2009	15:22:30	11.65	15.57	8.89	15.87	0.1
run2	4/14/2009	15:22:45	11.66	15.53	8.86	16.27	0.1
run2	4/14/2009	15:23:00	11.67	15.46	9.53	16.88	0.1
run2	4/14/2009	15:23:15	11.68	15.37	9.53	17.38	0.1
run2	4/14/2009	15:23:30	11.67	15.36	9.23	17.02	0.1
run2	4/14/2009	15:23:45	11.68	15.37	9.02	16.94	0.1
run2	4/14/2009	15:24:00	11.67	15.36	8.99	16.67	0.1
run2	4/14/2009	15:24:15	11.65	15.41	8.84	15.84	0.1
run2	4/14/2009	15:24:30	11.64	15.48	9.2	14.78	0.1
run2	4/14/2009	15:24:45	11.63	15.61	9.06	14.1	0.1
run2	4/14/2009	15:25:00	11.65	15.67	8.91	13.85	0.1
run2	4/14/2009	15:25:15	11.66	15.66	9.33	14.38	0.1
run2	4/14/2009	15:25:30	11.67	15.59	9.26	15.53	0.1
run2	4/14/2009	15:25:45	11.69	15.57	9.15	16.27	0.1

run2	4/14/2009	15:26:00	11.71	15.57	8.96	16.72	0.1
run2	4/14/2009	15:26:15	11.71	15.52	8.88	17.24	0.1
run2	4/14/2009	15:26:30	11.7	15.47	8.63	17.12	0.1
run2	4/14/2009	15:26:45	11.67	15.47	8.05	15.96	0.1
run2	4/14/2009	15:27:00	11.67	15.55	8.23	14.82	0.1
run2	4/14/2009	15:27:15	11.67	15.61	8.94	14.66	0.1
run2	4/14/2009	15:27:30	11.68	15.59	8.98	15.08	0.1
run2	4/14/2009	15:27:45	11.67	15.57	9.1	15.1	0.1
run2	4/14/2009	15:28:00	11.65	15.5	9.05	14.37	0.1
run2	4/14/2009	15:28:15	11.65	15.52	9.06	13.78	0.1
run2	4/14/2009	15:28:30	11.68	15.57	9.54	14.04	0.1
run2	4/14/2009	15:28:45	11.68	15.57	10.12	14.53	0.1
run2	4/14/2009	15:29:00	11.69	15.57	10.16	14.58	0.1
run2	4/14/2009	15:29:15	11.7	15.57	9.97	14.7	0.1
run2	4/14/2009	15:29:30	11.71	15.57	9.84	14.98	0.1
run2	4/14/2009	15:29:45	11.72	15.53	9.55	15.2	0.1
run2	4/14/2009	15:30:00	11.7	15.47	8.95	14.92	0.1
run2	4/14/2009	15:30:15	11.73	15.47	8.96	14.99	0.1
run2	4/14/2009	15:30:30	11.72	15.46	9.33	15.18	0.1
run2	4/14/2009	15:30:45	11.72	15.47	9.48	14.52	0.1
run2	4/14/2009	15:31:00	11.77	15.48	9.51	14.65	0.1
run2	4/14/2009	15:31:15	11.89	15.53	9.19	16.17	0.1
run2	4/14/2009	15:31:30	11.76	15.38	9.28	17.02	0.1
run2	4/14/2009	15:31:45	11.69	15.27	9.74	16.76	0.1
run2	4/14/2009	15:32:00	11.68	15.35	9.8	16.52	0.1
run2	4/14/2009	15:32:15	11.66	15.37	9.86	16.18	0.1
run2	4/14/2009	15:32:30	11.64	15.37	10.05	15.79	0.1
run2	4/14/2009	15:32:45	11.62	15.37	10.26	15.27	0.1
run2	4/14/2009	15:33:00	11.6	15.37	10.29	15.08	0.1
run2	4/14/2009	15:33:15	11.57	15.36	9.81	14.88	0.1
run2	4/14/2009	15:33:30	11.55	15.36	9.77	14.68	0.1
run2	4/14/2009	15:33:45	11.54	15.32	9.79	14.78	0.1
run2	4/14/2009	15:34:00	11.52	15.27	9.83	14.73	0.1
run2	4/14/2009	15:34:15	11.54	15.27	10.07	14.56	0.1
run2	4/14/2009	15:34:30	11.55	15.27	9.8	14.53	0.1
run2	4/14/2009	15:34:45	11.54	15.27	9.39	14.72	0.1
run2	4/14/2009	15:35:00	11.52	15.26	9.44	15.08	0.1
run2	4/14/2009	15:35:15	11.51	15.16	9.63	15.34	0.1
run2	4/14/2009	15:35:30	11.53	15.15	9.74	15.81	0.1
run2	4/14/2009	15:35:45	11.55	15.07	9.78	16.54	0.1
run2	4/14/2009	15:36:00	11.55	15.07	9.84	17.41	0.1
run2	4/14/2009	15:36:15	11.53	15.07	9.66	17.31	0.1
run2	4/14/2009	15:36:30	11.52	15.07	9.56	16.69	0.1
run2	4/14/2009	15:36:45	11.49	15.07	9.47	16.17	0.1
run2	4/14/2009	15:37:00	11.45	15.07	9.62	15.87	0.1
run2	4/14/2009	15:37:15	11.48	15.07	9.58	16.02	0.1
run2	4/14/2009	15:37:30	11.46	15.07	9.55	16.27	0.1
run2	4/14/2009	15:37:45	11.47	15.02	9.6	16.41	0.1
run2	4/14/2009	15:38:00	11.52	14.95	9.51	17.12	0.1
run2	4/14/2009	15:38:15	11.55	14.87	9.72	18.51	0.1
run2	4/14/2009	15:38:30	11.54	14.87	9.98	18.5	0.1

run2	4/14/2009	15:38:45	11.52	14.87	9.95	17.37	0.1
run2	4/14/2009	15:39:00	11.52	14.89	10.06	16.71	0.1
run2	4/14/2009	15:39:15	11.53	14.97	10.07	16.91	0.1
run2	4/14/2009	15:39:30	11.54	14.97	9.72	17.22	0.1
run2	4/14/2009	15:39:45	11.55	14.97	10.06	17.13	0.1
run2	4/14/2009	15:40:00	11.56	15.05	9.79	17.32	0.1
run2	4/14/2009	15:40:15	11.55	15.07	9.53	17.48	0.1
run2	4/14/2009	15:40:30	11.56	15.06	9.37	17.73	0.1
run2	4/14/2009	15:40:45	11.55	15.01	9.3	17.74	0.1
run2	4/14/2009	15:41:00	11.52	15.07	8.87	16.82	0.1
run2	4/14/2009	15:41:15	11.51	15.12	8.82	15.88	0.1
run2	4/14/2009	15:41:30	11.5	15.17	8.59	15.43	0.1
run2	4/14/2009	15:41:45	11.53	15.17	8.83	15.39	0.1
run2	4/14/2009	15:42:00	11.58	15.17	9.2	16.44	0.1
run2	4/14/2009	15:42:15	11.58	15.12	9.28	17.78	0.1
run2	4/14/2009	15:42:30	11.54	15.07	9.47	17.5	0.1
run2	4/14/2009	15:42:45	11.55	15.07	9.53	16.66	0.1
run2	4/14/2009	15:43:00	11.54	15.15	9.52	15.97	0.1
run2	4/14/2009	15:43:15	11.56	15.16	9.85	15.53	0.1
run2	4/14/2009	15:43:30	11.58	15.25	9.9	15.69	0.1
run2	4/14/2009	15:43:45	11.6	15.22	9.84	15.8	0.1
run2	4/14/2009	15:44:00	11.62	15.17	9.84	15.82	0.1
run2	4/14/2009	15:44:15	11.59	15.17	9.56	15.36	0.1
run2	4/14/2009	15:44:30	11.58	15.18	9.4	14.46	0.1
run2	4/14/2009	15:44:45	11.58	15.32	9.44	14.12	0.1
run2	4/14/2009	15:45:00	11.59	15.45	9.83	14.24	0.1
run2	4/14/2009	15:45:15	11.61	15.46	9.91	14.68	0.1
run2	4/14/2009	15:45:30	11.6	15.47	9.68	14.81	0.1
run2	4/14/2009	15:45:45	11.61	15.47	9.34	14.93	0.1
run2	4/14/2009	15:46:00	11.63	15.39	9.35	15.44	0.1
run2	4/14/2009	15:46:15	11.63	15.37	9.45	15.67	0.1
run2	4/14/2009	15:46:30	11.64	15.36	9.42	15.14	0.1
run2	4/14/2009	15:46:45	11.67	15.36	9.34	15.47	0.1
run2	4/14/2009	15:47:00	11.68	15.37	9.29	16.36	0.1
run2	4/14/2009	15:47:15	11.68	15.37	9.13	16.75	0.1
run2	4/14/2009	15:47:30	11.63	15.28	8.68	16.02	0.1
run2	4/14/2009	15:47:45	11.65	15.27	8.77	15.52	0.1
run2	4/14/2009	15:48:00	11.68	15.27	8.86	16.09	0.1
run2	4/14/2009	15:48:15	11.67	15.28	9.06	16.04	0.1
run2	4/14/2009	15:48:30	11.67	15.27	9.24	15.48	0.1
run2	4/14/2009	15:48:45	11.69	15.27	9.13	15.84	0.1
run2	4/14/2009	15:49:00	11.71	15.26	8.86	16.44	0.1
run2	4/14/2009	15:49:15	11.7	15.27	8.7	16.21	0.1
run2	4/14/2009	15:49:30	11.68	15.27	8.68	15.79	0.1
run2	4/14/2009	15:49:45	11.69	15.31	8.58	15.62	0.1
run2	4/14/2009	15:50:00	11.66	15.37	8.23	15.24	0.1
run2	4/14/2009	15:50:15	11.68	15.42	8.11	15.34	0.1
run2	4/14/2009	15:50:30	11.7	15.46	8.12	16.43	0.1
run2	4/14/2009	15:50:45	11.7	15.38	8.42	17.45	0.1
run2	4/14/2009	15:51:00	11.71	15.35	8.63	17.55	0.1
run2	4/14/2009	15:51:15	11.71	15.27	8.83	17.02	0.1

run2	4/14/2009	15:51:30	11.7	15.28	8.78	16.66	0.1
run2	4/14/2009	15:51:45	11.68	15.37	8.32	16.45	0.1
run2	4/14/2009	15:52:00	11.66	15.35	8.41	16.24	0.1
run2	4/14/2009	15:52:15	11.67	15.28	8.74	15.89	0.1
run2	4/14/2009	15:52:30	11.68	15.26	8.65	16.09	0.1
run2	4/14/2009	15:52:45	11.68	15.27	8.58	16.41	0.1
run2	4/14/2009	15:53:00	11.68	15.27	8.48	16.13	0.1
run2	4/14/2009	15:53:15	11.66	15.27	8.31	15.32	0.1
run2	4/14/2009	15:53:30	11.66	15.37	8.21	14.97	0.1
run2	4/14/2009	15:53:45	11.67	15.47	8.23	15.43	0.1
run2	4/14/2009	15:54:00	11.66	15.47	8.61	15.72	0.1
run2	4/14/2009	15:54:15	11.65	15.42	8.79	16.03	0.1
run2	4/14/2009	15:54:30	11.65	15.37	8.89	16.47	0.1
run2	4/14/2009	15:54:45	11.66	15.37	8.75	16.94	0.1
run2	4/14/2009	15:55:00	11.65	15.37	8.44	17.11	0.1
run2	4/14/2009	15:55:15	11.64	15.37	8.59	16.46	0.1
run2	4/14/2009	15:55:30	11.63	15.37	8.46	15.46	0.1
run2	4/14/2009	15:55:45	11.64	15.36	8.44	15.17	0.1
run2	4/14/2009	15:56:00	11.63	15.36	8.73	15.38	0.1
run2	4/14/2009	15:56:15	11.6	15.36	8.81	15.11	0.1
run2	4/14/2009	15:56:30	11.59	15.39	9.03	14.6	0.1
run2	4/14/2009	15:56:45	11.6	15.47	9.23	14.75	0.1
run2	4/14/2009	15:57:00	11.59	15.47	9.23	15.15	0.1
run2	4/14/2009	15:57:15	11.62	15.42	9.04	15.89	0.1
run2	4/14/2009	15:57:30	11.66	15.34	9.12	17.24	0.1
run2	4/14/2009	15:57:45	11.67	15.27	9.02	19.15	0.1
run2	4/14/2009	15:58:00	11.66	15.18	8.5	19.76	0.1
run2	4/14/2009	15:58:15	11.64	15.17	8.52	18.51	0.1
run2	4/14/2009	15:58:30	11.6	15.19	8.45	17.19	0.1
run2	4/14/2009	15:58:45	11.59	15.27	8.13	16.46	0.1
run2	4/14/2009	15:59:00	11.58	15.26	8.56	16.31	0.1
run2	4/14/2009	15:59:15	11.59	15.27	8.43	16.47	0.1
run2	4/14/2009	15:59:30	11.61	15.24	8.55	17.13	0.1
run2	4/14/2009	15:59:45	11.62	15.17	8.48	17.98	0.1
run2	4/14/2009	16:00:00	11.61	15.18	8.4	18.01	0.1
run2	4/14/2009	16:00:15	11.58	15.11	8.75	17.01	0.1
run2	4/14/2009	16:00:30	11.54	15.16	8.81	16.04	0.1
run2	4/14/2009	16:00:45	11.51	15.17	8.76	14.65	0.1
run2	4/14/2009	16:01:00	11.51	15.28	8.85	13.87	0.1
run2	4/14/2009	16:01:15	11.52	15.36	8.96	14.45	0.1
run2	4/14/2009	16:01:30	11.53	15.34	8.84	15.15	0.1
run2	4/14/2009	16:01:45	11.53	15.27	8.73	14.83	0.1
run2	4/14/2009	16:02:00	11.55	15.26	8.86	14.64	0.1
run2	4/14/2009	16:02:15	11.55	15.27	9.05	14.97	0.1
run2	4/14/2009	16:02:30	11.55	15.25	8.03	15.51	0.1
run2	4/14/2009	16:02:45	11.54	15.17	7.81	15.52	0.1
run2	4/14/2009	16:03:00	11.53	15.17	8.16	15.16	0.1
run2	4/14/2009	16:03:15	11.53	15.17	9.03	15.11	0.1
run2	4/14/2009	16:03:30	11.53	15.17	9.1	14.91	0.1
run2	4/14/2009	16:03:45	11.56	15.17	8.87	15.57	0.1
run2	4/14/2009	16:04:00	11.58	15.14	8.8	16.54	0.1

run2	4/14/2009	16:04:15	11.58	15.07	9.06	16.93	0.1	
run2	4/14/2009	16:04:30	11.61	15.07	9.19	16.93	0.1	
run2	4/14/2009	16:04:45	11.61	15.12	9.42	17.18	0.1	
run2	4/14/2009	16:05:00	11.58	15.14	9.49	16.91	0.1	
run2	4/14/2009	16:05:15	11.54	15.12	9.16	15.3	0.1	
run2	4/14/2009	16:05:30	11.57	15.19	9.37	14.64	0.1	
run2	4/14/2009	16:05:45	11.59	15.27	9.41	15.71	0.1	
run2	4/14/2009	16:06:00	11.61	15.16	8.97	16.95	0.1	
averun2	4/14/2009	14:50:00	11.61	15.43	9.62	15.44	0.1	60
scg2	4/14/2009	16:07:45	11.53	15.27	9.02	14.7	0.22	ALM02852
scg2	4/14/2009	16:08:00	11.58	15.27	9.21	15.62	0.23	ALM02852
scg2	4/14/2009	16:08:15	11.54	15.21	9.44	16.73	0.24	ALM02852
scg2	4/14/2009	16:08:30	11.81	15.05	9.32	15.29	0.33	ALM02852
scg2	4/14/2009	16:08:45	7.65	14.52	9.45	9.09	0.36	ALM02852
scg2	4/14/2009	16:09:00	3.07	13.02	9.1	3.77	0.27	ALM02852
scg2	4/14/2009	16:09:15	1.39	16.09	6.97	1.03	0.24	ALM02852
scg2	4/14/2009	16:09:30	0.82	23.37	4.22	0.33	0.24	ALM02852
scg2	4/14/2009	16:09:45	0.61	26.97	1.68	0.08	0.23	ALM02852
scg2	4/14/2009	16:10:00	0.51	27.92	0.74	0	0.23	ALM02852
scg2	4/14/2009	16:10:15	0.43	28.19	0.48	0.11	0.23	ALM02852
scg2	4/14/2009	16:10:30	0.39	28.32	0.2	0.19	0.23	ALM02852
scg2	4/14/2009	16:10:45	0.35	28.38	0.01	0.19	0.24	ALM02852
scg2	4/14/2009	16:11:00	0.32	28.45	0.34	0.19	0.23	ALM02852
scg2	4/14/2009	16:11:15	0.3	46.06	0.09	0.26	0.24	ALM02852
scg2	4/14/2009	16:11:30	0.28	46.14	0.2	0.18	0.26	ALM02852
scg2	4/14/2009	16:11:45	0.26	46.21	0.03	0.28	0.24	ALM02852
scg2	4/14/2009	16:12:00	0.24	46.26	0.09	0.29	0.24	ALM02852
scg2	4/14/2009	16:12:15	0.22	46.25	0.22	0.39	0.24	ALM02852
scg2	4/14/2009	16:12:30	0.21	46.36	0.37	0.39	0.23	ALM02852
scg2	4/14/2009	16:12:45	0.2	46.37	0.54	0.39	0.25	ALM02852
scg2	4/14/2009	16:13:00	0.19	46.37	0.58	0.39	0.23	ALM02852
scg2	4/14/2009	16:13:15	0.18	46.43	1	0.39	0.24	ALM02852
scg2	4/14/2009	16:13:30	0.17	46.47	1.63	0.39	0.24	ALM02852
scg2	4/14/2009	16:13:45	0.17	46.47	1.17	0.39	0.23	ALM02852
scg2	4/14/2009	16:14:00	0.16	46.47	0.79	0.39	0.23	ALM02852
scg2	4/14/2009	16:14:15	0.15	46.53	0.53	0.46	0.23	ALM02852
o2zero1	4/14/2009	16:11:15	0.3	46.06	0.09	0.26	0.24	ALM02852
so2zero1	4/14/2009	16:11:15	0.3	46.06	0.09	0.26	0.24	ALM02852
cozero1	4/14/2009	16:11:15	0.3	46.06	0.09	0.26	0.24	ALM02852
noxspan1	4/14/2009	16:14:00	0.16	46.47	0.79	0.39	0.23	ALM02852
scg4	4/14/2009	16:14:30	0.15	46.57	0.79	0.39	0.22	ALM04147
scg4	4/14/2009	16:14:45	0.14	46.57	0.93	0.39	0.21	ALM04147
scg4	4/14/2009	16:15:00	0.15	46.57	0.8	0.45	0.21	ALM04147
scg4	4/14/2009	16:15:15	0.19	46.57	0.68	0.19	0.21	ALM04147
scg4	4/14/2009	16:15:30	0.19	46.16	0.32	6.95	0.36	ALM04147
scg4	4/14/2009	16:15:45	0.16	41.87	0.66	25.44	0.34	ALM04147
scg4	4/14/2009	16:16:00	0.14	25.24	0.68	35.46	0.52	ALM04147
scg4	4/14/2009	16:16:15	0.13	10.44	0.82	39.85	0.54	ALM04147
scg4	4/14/2009	16:16:30	0.13	4.19	0.78	41.03	0.48	ALM04147
scg4	4/14/2009	16:16:45	0.12	2.59	0.66	41.58	0.5	ALM04147
scg4	4/14/2009	16:17:00	0.12	1.96	0.76	41.85	0.35	ALM04147

scg4	4/14/2009	16:17:15	0.12	1.6	0.46	42.04	0.22	ALM04147
scg4	4/14/2009	16:17:30	0.12	1.27	0.38	42.25	0.19	ALM04147
scg4	4/14/2009	16:17:45	0.12	1.05	0.46	42.45	0.18	ALM04147
scg4	4/14/2009	16:18:00	0.12	0.89	0.39	42.45	0.17	ALM04147
scg4	4/14/2009	16:18:15	0.12	0.75	0.56	42.54	0.18	ALM04147
scg4	4/14/2009	16:18:30	0.12	0.68	0.18	42.62	0.16	ALM04147
scg4	4/14/2009	16:18:45	0.12	0.61	0.15	42.65	0.15	ALM04147
scg4	4/14/2009	16:19:00	0.12	0.52	0.54	42.72	0.15	ALM04147
noxzero1	4/14/2009	16:18:45	0.12	0.61	0.15	42.65	0.15	ALM04147
cospan1	4/14/2009	16:18:15	0.12	0.75	0.56	42.54	0.18	ALM04147
scg6	4/14/2009	16:19:15	0.11	0.51	0.62	42.83	0.15	ALM05992
scg6	4/14/2009	16:19:30	0.12	0.47	0.37	42.72	0.15	ALM05992
scg6	4/14/2009	16:19:45	0.11	0.38	0.31	42.77	0.14	ALM05992
scg6	4/14/2009	16:20:00	0.15	0.32	0.52	42.85	0.14	ALM05992
scg6	4/14/2009	16:20:15	0.19	0.32	0.58	39.86	0.14	ALM05992
scg6	4/14/2009	16:20:30	0.16	0.34	0.75	28.29	0.14	ALM05992
scg6	4/14/2009	16:20:45	0.13	0.49	3.36	11.89	0.14	ALM05992
scg6	4/14/2009	16:21:00	0.12	0.51	14.69	5.14	0.14	ALM05992
scg6	4/14/2009	16:21:15	0.11	0.51	26.97	2.4	0.13	ALM05992
scg6	4/14/2009	16:21:30	0.12	0.51	34.79	1.73	0.13	ALM05992
scg6	4/14/2009	16:21:45	0.11	0.51	38.51	1.15	0.13	ALM05992
scg6	4/14/2009	16:22:00	0.11	0.51	40.28	0.81	0.13	ALM05992
scg6	4/14/2009	16:22:15	0.11	0.51	41.58	0.56	0.12	ALM05992
scg6	4/14/2009	16:22:30	0.11	0.51	42.78	0.37	0.11	ALM05992
scg6	4/14/2009	16:22:45	0.11	0.51	43.77	0.22	0.11	ALM05992
scg6	4/14/2009	16:23:00	0.11	0.49	44.01	0.14	0.11	ALM05992
scg6	4/14/2009	16:23:15	0.11	0.45	44.42	0	0.11	ALM05992
scg6	4/14/2009	16:23:30	0.11	0.44	45.12	0.06	0.11	ALM05992
so2span1	4/14/2009	16:23:15	0.11	0.45	44.42	0	0.11	ALM05992
scg9	4/14/2009	16:23:45	0.11	0.45	45.25	0.08	0.09	ALM00690
scg9	4/14/2009	16:24:00	0.11	0.44	45.3	0.09	0.23	ALM00690
scg9	4/14/2009	16:24:15	0.11	0.44	45.79	0.12	0.42	ALM00690
scg9	4/14/2009	16:24:30	0.34	0.43	45.94	0.12	0.35	ALM00690
scg9	4/14/2009	16:24:45	1.33	0.61	45.68	0.48	0.26	ALM00690
scg9	4/14/2009	16:25:00	5.14	1.46	45.58	0.48	0.25	ALM00690
scg9	4/14/2009	16:25:15	8.78	1.65	42.2	0.13	0.14	ALM00690
scg9	4/14/2009	16:25:30	10.32	0.89	32.25	0.52	0.13	ALM00690
scg9	4/14/2009	16:25:45	10.92	0.49	20.51	0.69	0.11	ALM00690
scg9	4/14/2009	16:26:00	11.17	0.23	12.37	0.68	0.12	ALM00690
scg9	4/14/2009	16:26:15	11.29	0.22	7.85	0.69	0.15	ALM00690
scg9	4/14/2009	16:26:30	11.35	0.19	4.9	0.69	4.86	ALM00690
scg9	4/14/2009	16:26:45	11.39	0.12	3.26	0.72	64.86	ALM00690
scg9	4/14/2009	16:27:00	11.41	0.12	2.72	0.78	53.1	ALM00690
scg9	4/14/2009	16:27:15	11.65	0.12	2.15	0.78	28.63	ALM00690
scg9	4/14/2009	16:27:30	11.76	0.11	1.67	0.78	2.75	ALM00690
scg9	4/14/2009	16:27:45	11.8	0.12	1.26	0.78	2.01	ALM00690
scg9	4/14/2009	16:28:00	11.81	0.12	1	0.78	1.92	ALM00690
thczero1	4/14/2009	16:25:30	10.32	0.89	32.25	0.52	0.13	ALM00690
o2span1	4/14/2009	16:27:45	11.8	0.12	1.26	0.78	2.01	ALM00690
scg13	4/14/2009	16:28:15	11.81	0.12	1.03	0.78	1.61	LL6768/cg
scg13	4/14/2009	16:28:30	11.82	0.12	0.64	0.78	1.67	LL6768/cg

scg13	4/14/2009	16:28:45	11.82	0.12	0.33	0.75	1.63	LL6768/cg
scg13	4/14/2009	16:29:00	11.85	0.28	0.19	0.24	1.51	LL6768/cg
scg13	4/14/2009	16:29:15	11.91	1.15	0.12	6.05	1.46	LL6768/cg
scg13	4/14/2009	16:29:30	11.97	6.83	1.07	11.39	8.58	LL6768/cg
scg13	4/14/2009	16:29:45	11.98	14.56	2.31	14.88	13.04	LL6768/cg
scg13	4/14/2009	16:30:00	11.96	20.45	4.29	15.35	27.47	LL6768/cg
scg13	4/14/2009	16:30:15	11.97	21.58	6.21	15.29	36.91	LL6768/cg
scg13	4/14/2009	16:30:30	11.98	21.97	7.53	15.36	36.91	LL6768/cg
scg13	4/14/2009	16:30:45	11.95	22.11	8.43	15.05	42.7	LL6768/cg
scg13	4/14/2009	16:31:00	11.96	22.25	8.91	14.46	47.21	LL6768/cg
scg13	4/14/2009	16:31:15	11.96	22.31	9.27	14.45	46.57	LL6768/cg
scg13	4/14/2009	16:31:30	11.93	22.44	9.21	14.06	46.35	LL6768/cg
scg13	4/14/2009	16:31:45	11.9	22.5	9.3	13.15	46.1	LL6768/cg
scg13	4/14/2009	16:32:00	11.9	22.64	9.33	12.86	47.2	LL6768/cg
scg13	4/14/2009	16:32:15	11.95	22.7	8.73	13.91	47.24	LL6768/cg
thcspan1	4/14/2009	16:32:15	11.95	22.7	8.73	13.91	47.24	LL6768/cg

filename	4/15/2009	7:40:02 C:\RM\DATA\09-177A.csv						
testby1	Metco Environmental							
testby2	Baton Rouge LA							
testby3	M-43							
testby4	Daniel Moore							
testfor1	Valero							
testfor2	St. Charles Refinery							
testfor3	TOX #3 1600 TOX Stack (EQT 241)							
testfor4	Norco LA							
name			1 O2	3 NOX	4 SO2	5 CO	6 THC	
sn			106423	42C-66054-351		48C-72812	9670591	
offset			0	0	0	0	0	
fullscale			25	100	100	100	100	
train			1	1	1	1	1	
gastype			o2 3a	nox 20	so2 6c	co 10	thc 25a	
dcg1	4/15/2009	7:42:15	19.81	0.01	5.75	-0.68	5.95	ALM05283
dcg1	4/15/2009	7:42:30	14.09	0.01	5.94	-0.69	5.93	ALM05283
dcg1	4/15/2009	7:42:45	2.73	0.08	5.96	-0.8	5.87	ALM05283
dcg1	4/15/2009	7:43:00	0.69	0.11	5.89	-0.98	5.73	ALM05283
dcg1	4/15/2009	7:43:15	0.26	0.11	5.73	-1	5.72	ALM05283
dcg1	4/15/2009	7:43:30	0.14	0	5.67	-1.03	5.75	ALM05283
dcg1	4/15/2009	7:43:45	0.09	0	5.65	-1.06	5.75	ALM05283
dcg1	4/15/2009	7:44:00	0.08	0	5.76	-0.7	5.76	ALM05283
dcg1	4/15/2009	7:44:15	0.09	0	5.56	0	5.76	ALM05283
dcg1	4/15/2009	7:44:30	0.09	0	3.48	0	5.79	ALM05283
dcg1	4/15/2009	7:44:45	0.09	0	0.03	0	5.73	ALM05283
dcg1	4/15/2009	7:45:00	0.09	0	-0.2	-0.05	5.71	ALM05283
dcg1	4/15/2009	7:45:15	0.09	0	-0.22	-0.02	5.72	ALM05283
dcg1	4/15/2009	7:45:30	0.08	0	-0.21	0	5.74	ALM05283
dcg1	4/15/2009	7:45:45	0.08	0	0.03	0	5.68	ALM05283
dcg1	4/15/2009	7:46:00	0.08	0	0.09	0	5.76	ALM05283
dcg1	4/15/2009	7:46:15	0.07	0	-0.23	0	5.86	ALM05283
o2ezero1	4/15/2009	7:44:15	0.09	0	5.56	0	5.76	ALM05283
noxezero1	4/15/2009	7:44:00	0.08	0	5.76	-0.7	5.76	ALM05283
so2ezero1	4/15/2009	7:46:00	0.08	0	0.09	0	5.76	ALM05283
coezero1	4/15/2009	7:44:45	0.09	0	0.03	0	5.73	ALM05283
dcg3	4/15/2009	7:46:30	0.07	0	0.01	0	5.6	BLM00148
dcg3	4/15/2009	7:46:45	0.07	0	0.02	0	5.73	BLM00148
dcg3	4/15/2009	7:47:00	0.09	0	-0.18	0.11	5.8	BLM00148
dcg3	4/15/2009	7:47:15	1.67	0	0.01	0.32	5.85	BLM00148
dcg3	4/15/2009	7:47:30	1.01	0	0.26	0.36	5.86	BLM00148
dcg3	4/15/2009	7:47:45	0.19	10.84	-0.09	0.2	5.91	BLM00148
dcg3	4/15/2009	7:48:00	0.07	56.33	-0.36	0.05	5.81	BLM00148
dcg3	4/15/2009	7:48:15	0.04	88.07	-0.15	0	5.75	BLM00148
dcg3	4/15/2009	7:48:30	0.03	92.59	0.07	0.02	5.72	BLM00148
dcg3	4/15/2009	7:48:45	0.02	92.73	0.27	0.03	5.86	BLM00148
dcg3	4/15/2009	7:49:00	0.02	92.77	0.16	0.03	6.01	BLM00148
dcg3	4/15/2009	7:49:15	0.02	92.77	-0.13	0.05	6.03	BLM00148
dcg3	4/15/2009	7:49:30	0.02	92.86	0.07	0.05	5.78	BLM00148
dcg3	4/15/2009	7:49:45	0.02	92.86	0.08	0.04	5.72	BLM00148
dcg3	4/15/2009	7:50:00	0.02	92.3	0.01	0.03	5.69	BLM00148

dcg3	4/15/2009	7:50:15	0.02	92.96	-0.01	0.04	5.64	BLM00148	
dcg3	4/15/2009	7:50:30	0.02	93.32	0.08	0.03	5.8	BLM00148	
dcg3	4/15/2009	7:50:45	0.02	93.26	0.11	0.02	5.96	BLM00148	
dcg3	4/15/2009	7:51:00	0.02	93.36	-0.19	0.03	5.83	BLM00148	
noxhigh1	4/15/2009	7:51:00	0.02	93.36	-0.19	0.03	5.83	BLM00148	93.4 ppm NO
dcg2	4/15/2009	7:51:15	0.05	93.36	-0.11	0.03	5.67	ALM02852	BLM1483
dcg2	4/15/2009	7:51:30	2.24	93.36	-0.1	0.05	5.55	ALM02852	
dcg2	4/15/2009	7:51:45	0.43	85.13	-0.16	0.12	5.54	ALM02852	
dcg2	4/15/2009	7:52:00	0.1	56.41	-0.18	0.22	5.31	ALM02852	
dcg2	4/15/2009	7:52:15	0.04	41.77	-0.32	0.2	5.13	ALM02852	
dcg2	4/15/2009	7:52:30	0.02	45.14	-0.24	0.26	5	ALM02852	
dcg2	4/15/2009	7:52:45	0.02	46.57	-0.1	0.22	4.95	ALM02852	
dcg2	4/15/2009	7:53:00	0.02	46.65	-0.3	0.2	5.03	ALM02852	
dcg2	4/15/2009	7:53:15	0.01	46.65	-0.44	0.27	5.06	ALM02852	
dcg2	4/15/2009	7:53:30	0.01	46.69	-0.28	0.21	4.96	ALM02852	46.8 ppm
noxmid1	4/15/2009	7:53:30	0.01	46.69	-0.28	0.21	4.96	ALM02852 9	NOx
dcg5	4/15/2009	7:53:45	0.01	46.76	-0.29	0.28	5.06	AAL19513	
dcg5	4/15/2009	7:54:00	1.25	46.76	-0.18	1.76	5.12	AAL19513	
dcg5	4/15/2009	7:54:15	0.76	46.33	-0.29	34.41	5.12	AAL19513	
dcg5	4/15/2009	7:54:30	0.14	32.76	-0.31	74.95	5.15	AAL19513	
dcg5	4/15/2009	7:54:45	0.06	12.15	-0.39	94.4	5.03	AAL19513	
dcg5	4/15/2009	7:55:00	0.06	0.57	-0.22	97.26	5	AAL19513	
dcg5	4/15/2009	7:55:15	0.06	0.43	-0.29	93.73	4.96	AAL19513	
dcg5	4/15/2009	7:55:30	0.06	0.32	-0.51	93.97	5.09	AAL19513	
dcg5	4/15/2009	7:55:45	0.06	0.26	-0.39	93.95	5.07	AAL19513	
dcg5	4/15/2009	7:56:00	0.06	0.24	-0.26	93.85	5.23	AAL19513	
dcg5	4/15/2009	7:56:15	0.06	0.23	-0.1	93.98	5.13	AAL19513	
cohigh1	4/15/2009	7:56:15	0.06	0.23	-0.1	93.98	5.13	AAL19513	94.1 ppm CO
dcg4	4/15/2009	7:56:30	0.1	0.23	-0.08	93.92	5.16	ALM04147	
dcg4	4/15/2009	7:56:45	1.81	0.22	-0.22	85.4	5.04	ALM04147	
dcg4	4/15/2009	7:57:00	0.34	0.22	-0.41	62.4	4.98	ALM04147	
dcg4	4/15/2009	7:57:15	0.1	0.22	-0.54	47.06	5.04	ALM04147	
dcg4	4/15/2009	7:57:30	0.06	0.13	-0.48	43.64	4.86	ALM04147	
dcg4	4/15/2009	7:57:45	0.04	0.14	-0.68	43.3	4.8	ALM04147	
dcg4	4/15/2009	7:58:00	0.04	0.16	-0.18	43.25	4.93	ALM04147	
dcg4	4/15/2009	7:58:15	0.04	0.16	-0.8	43.27	5.03	ALM04147	
dcg4	4/15/2009	7:58:30	0.04	0.17	-1.2	43.22	5.06	ALM04147	
dcg4	4/15/2009	7:58:45	0.04	0.16	-1.12	43.23	4.88	ALM04147	
dcg4	4/15/2009	7:59:00	0.04	0.15	-0.63	43.34	4.51	ALM04147	
comid1	4/15/2009	7:59:00	0.04	0.15	-0.63	43.34	4.51	ALM04147 3	42.7 ppm CO
dcg8	4/15/2009	7:59:30	1.09	0.12	-0.96	42.67	4.82	BLM00508	
dcg8	4/15/2009	7:59:45	0.72	0.19	-0.87	28.59	4.67	BLM00508	
dcg8	4/15/2009	8:00:00	0.14	0.36	8.53	10.19	4.69	BLM00508	
dcg8	4/15/2009	8:00:15	0.05	0.4	51.12	1.22	4.71	BLM00508	
dcg8	4/15/2009	8:00:30	0.04	0.22	87.34	0.1	4.72	BLM00508	
dcg8	4/15/2009	8:00:45	0.03	0.22	96.7	-0.06	4.78	BLM00508	
dcg8	4/15/2009	8:01:00	0.03	0.22	96.7	0.05	4.7	BLM00508	
dcg8	4/15/2009	8:01:15	0.02	0.22	96.69	0.02	5.04	BLM00508	
dcg8	4/15/2009	8:01:30	0.02	0.22	94.75	0.04	4.95	BLM00508	
dcg8	4/15/2009	8:01:45	0.02	0.22	94.92	0.04	4.76	BLM00508	
dcg8	4/15/2009	8:02:00	0.02	0.22	94.91	0.03	4.79	BLM00508	

dcg8	4/15/2009	8:02:15	0.02	0.22	94.52	0.03	4.81	BLM00508	
dcg8	4/15/2009	8:02:30	0.02	0.22	94.57	0.03	4.88	BLM00508	
dcg8	4/15/2009	8:02:45	0.02	0.22	94.48	0.04	4.88	BLM00508	
so2high1	4/15/2009	8:02:45	0.02	0.22	94.48	0.04	4.88	BLM00508	93.8 ppm SO_2
dcg6	4/15/2009	8:03:00	0.02	0.22	94.64	-0.01	4.83	ALM05992	
dcg6	4/15/2009	8:03:15	1.52	0.23	95.08	0.01	4.81	ALM05992	
dcg6	4/15/2009	8:03:30	0.32	0.41	94.07	0.22	4.85	ALM05992	
dcg6	4/15/2009	8:03:45	0.07	0.58	79.74	0.41	4.88	ALM05992	
dcg6	4/15/2009	8:04:00	0.03	0.44	58.1	0.41	4.87	ALM05992	
dcg6	4/15/2009	8:04:15	0.01	0.24	48.16	0.41	4.92	ALM05992	
dcg6	4/15/2009	8:04:30	0.01	0.22	45.62	0.41	4.96	ALM05992	
dcg6	4/15/2009	8:04:45	0.01	0.21	45.23	0.41	5.05	ALM05992	
dcg6	4/15/2009	8:05:00	0.01	0.22	45.29	0.41	5.11	ALM05992	
dcg6	4/15/2009	8:05:15	0.01	0.22	45.16	0.41	4.95	ALM05992	
dcg6	4/15/2009	8:05:30	0.01	0.22	45.05	0.41	5.03	ALM05992	
dcg6	4/15/2009	8:05:45	0.01	0.22	45.09	0.41	5.18	ALM05992	
so2mid1	4/15/2009	8:05:45	0.01	0.22	45.09	0.41	5.18	~~ALM05992~~	ALM59290 44.35 ppm SO_2
dcg11	4/15/2009	8:06:00	0.01	0.22	45.11	0.41	5.05	AAL20005/	
dcg11	4/15/2009	8:06:15	7.76	0.23	45.02	0.42	1.26	AAL20005/	
dcg11	4/15/2009	8:06:30	17.81	0.22	44.59	0.42	-0.1	AAL20005/	
dcg11	4/15/2009	8:06:45	19.46	0.22	33.87	0.42	-0.16	AAL20005/	
dcg11	4/15/2009	8:07:00	19.81	0.12	14.47	0.42	-0.17	AAL20005/	
dcg11	4/15/2009	8:07:15	19.89	0.11	4.38	0.36	-0.13	AAL20005/	
dcg11	4/15/2009	8:07:30	20.26	0.12	1.33	0.42	-0.04	AAL20005/	
dcg11	4/15/2009	8:07:45	20.85	0.12	0.65	0.42	0.16	AAL20005/	
dcg11	4/15/2009	8:08:00	20.85	0.12	0.31	0.42	-0.01	AAL20005/	
dcg11	4/15/2009	8:08:15	20.84	0.12	-0.06	0.42	0.02	AAL20005/	
dcg11	4/15/2009	8:08:30	20.83	0.12	0.35	0.42	0.03	AAL20005/	
thcezero1	4/15/2009	8:07:30	20.26	0.12	1.33	0.42	-0.04	AAL20005/	20.9% O_2
o2high1	4/15/2009	8:08:30	20.83	0.12	0.35	0.42	0.03	AAL20005/	
dcg9	4/15/2009	8:09:00	20.74	0.12	0.33	0.43	0	ALM00690	
dcg9	4/15/2009	8:09:15	15.21	0.13	0.22	0.27	-0.01	ALM00690	
dcg9	4/15/2009	8:09:30	12.23	0.26	0.24	0.04	-0.01	ALM00690	
dcg9	4/15/2009	8:09:45	11.77	0.39	0.42	-0.08	0.15	ALM00690	
dcg9	4/15/2009	8:10:00	11.66	0.37	0.81	-0.08	0.2	ALM00690	
dcg9	4/15/2009	8:10:15	11.63	0.32	1.31	-0.09	0.2	ALM00690	
dcg9	4/15/2009	8:10:30	11.73	0.32	1.05	-0.08	0.19	ALM00690	
dcg9	4/15/2009	8:10:45	11.8	0.39	1.21	-0.09	0.08	ALM00690	
o2mid1	4/15/2009	8:10:30	11.73	0.32	1.05	-0.08	0.19	ALM00690	11.8% O_2
dcg14	4/15/2009	8:11:00	11.97	0.42	1.35	-0.09	0.11	LL78615/c	
dcg14	4/15/2009	8:11:15	17.76	0.42	1.56	-0.06	0.09	LL78615/c	
dcg14	4/15/2009	8:11:30	20.6	0.27	1.7	0.06	1.29	LL78615/c	
dcg14	4/15/2009	8:11:45	21.05	0.14	1.7	0.25	69.61	LL78615/c	
dcg14	4/15/2009	8:12:00	21.14	0.12	0.41	0.42	71.7	LL78615/c	
dcg14	4/15/2009	8:12:15	21.14	0.03	-0.11	0.48	96.87	LL78615/c	
dcg14	4/15/2009	8:12:30	21.14	0.01	-0.04	0.35	85.67	LL78615/c	
dcg14	4/15/2009	8:12:45	21.13	0.02	-0.1	0.4	86.1	LL78615/c	
dcg14	4/15/2009	8:13:00	21.12	0.12	-0.33	0.42	86.16	LL78615/c	
dcg14	4/15/2009	8:13:15	21.12	0.12	-0.01	0.42	85.53	LL78615/c	
dcg14	4/15/2009	8:13:30	21.12	0.11	0.14	0.42	85.44	LL78615/c	
dcg14	4/15/2009	8:13:45	21.12	0.12	0.09	0.42	86.28	LL78615/c	

dcg14	4/15/2009	8:14:00	21.12	0.12	0.03	0.42	86.19	LL78615/c	
dcg14	4/15/2009	8:14:15	21.12	0.12	0.09	0.42	86.12	LL78615/c	
dcg14	4/15/2009	8:14:30	21.14	0.12	0.12	0.42	85.03	LL78615/c	
dcg14	4/15/2009	8:14:45	21.14	0.11	-0.02	0.31	80.85	LL78615/c	
dcg14	4/15/2009	8:15:00	21.14	0.12	-0.2	0.3	80.26	LL78615/c	
thchigh1	4/15/2009	8:14:15	21.12	0.12	0.09	0.42	86.12	LL78615/c	86.1 ppm C_3H_8
dcg13	4/15/2009	8:15:15	21.14	0.12	-0.19	0.3	68.32	LL6768/cg	
dcg13	4/15/2009	8:15:30	21.14	0.12	0.24	0.25	20.34	LL6768/cg	
dcg13	4/15/2009	8:15:45	21.14	0.12	0.39	0.37	46.5	LL6768/cg	
dcg13	4/15/2009	8:16:00	21.13	0.11	0.3	0.26	46.55	LL6768/cg	
dcg13	4/15/2009	8:16:15	21.13	0.12	0.09	0.46	47.35	LL6768/cg	
dcg13	4/15/2009	8:16:30	21.13	0.12	0.03	0.42	59.98	LL6768/cg	
dcg13	4/15/2009	8:16:45	21.12	0.12	-0.02	0.51	47.84	LL6768/cg	
dcg13	4/15/2009	8:17:00	21.12	0.12	0.1	0.51	47.85	LL6768/cg	
dcg13	4/15/2009	8:17:15	21.11	0.12	0.18	0.43	47.78	LL6768/cg	
dcg13	4/15/2009	8:17:30	21.11	0.12	0.11	0.42	47.45	LL6768/cg	
dcg13	4/15/2009	8:17:45	21.11	0.12	-0.01	0.42	47.4	LL6768/cg	
thcmid1	4/15/2009	8:17:30	21.11	0.12	0.11	0.42	47.45	LL6768/cg	47.3 ppm C_3H_8
dcg12	4/15/2009	8:18:00	21.11	0.12	0.19	0.42	47.38	BLM00390	
dcg12	4/15/2009	8:18:15	21.12	0.12	0.05	0.39	46.65	BLM00390	
dcg12	4/15/2009	8:18:30	21.11	0.12	-0.07	0.37	46.51	BLM00390	
dcg12	4/15/2009	8:18:45	21.12	0.12	0.05	0.39	37.46	BLM00390	
dcg12	4/15/2009	8:19:00	21.11	0.12	0.42	0.37	26.69	BLM00390	
dcg12	4/15/2009	8:19:15	21.12	0.12	0.29	0.35	26.37	BLM00390	
dcg12	4/15/2009	8:19:30	21.12	0.12	0.38	0.42	-17.72	BLM00390	
dcg12	4/15/2009	8:19:45	21.11	0.12	0.43	0.42	-100.02	BLM00390	
dcg12	4/15/2009	8:20:00	21.12	0.12	0.23	0.42	-48.83	BLM00390	
dcg12	4/15/2009	8:20:15	21.12	0.12	0.3	0.32	26.94	BLM00390	
dcg12	4/15/2009	8:20:30	21.1	0.12	0.05	0.31	25.86	BLM00390	
dcg12	4/15/2009	8:20:45	21.1	0.12	0.22	0.41	25.68	BLM00390	
dcg12	4/15/2009	8:21:00	21.1	0.12	0.28	0.48	25.64	BLM00390	
thclow1	4/15/2009	8:21:00	21.1	0.12	0.28	0.48	25.64	BLM00390	5 26.1 ppm C_3H_8
scg2	4/15/2009	8:22:00	21.11	0.12	0.33	0.35	26.62	ALM02852	
scg2	4/15/2009	8:22:15	21.1	0.12	0.33	0.41	25	ALM02852	
scg2	4/15/2009	8:22:30	21.11	0.12	0.38	0.35	25.21	ALM02852	
scg2	4/15/2009	8:22:45	21.11	0.12	0.55	0.38	25.11	ALM02852	
scg2	4/15/2009	8:23:00	21.11	0.12	0.2	0.37	24.43	ALM02852	
scg2	4/15/2009	8:23:15	21.11	0.12	0.33	0.42	24.29	ALM02852	
scg2	4/15/2009	8:23:30	21.1	0.12	0.11	0.42	21.9	ALM02852	
scg2	4/15/2009	8:23:45	21.1	0.12	0.16	0.42	3.63	ALM02852	
scg2	4/15/2009	8:24:00	19.86	0.12	0.44	0.42	4.46	ALM02852	
scg2	4/15/2009	8:24:15	9.81	0.9	0.38	0.38	4.05	ALM02852	
scg2	4/15/2009	8:24:30	3.89	9.63	0.01	0.3	3.07	ALM02852	
scg2	4/15/2009	8:24:45	1.96	25	0.11	0.3	2.68	ALM02852	
scg2	4/15/2009	8:25:00	1.25	36.98	0.1	0.3	2.5	ALM02852	
scg2	4/15/2009	8:25:15	0.94	41.65	0.21	0.3	2.34	ALM02852	
scg2	4/15/2009	8:25:30	0.75	43.14	0.39	0.3	2.21	ALM02852	
scg2	4/15/2009	8:25:45	0.59	43.73	0.23	0.33	2.17	ALM02852	
scg2	4/15/2009	8:26:00	0.47	45.71	0.37	0.34	2.15	ALM02852	
scg2	4/15/2009	8:26:15	0.39	46.45	0.44	0.33	2.12	ALM02852	
scg2	4/15/2009	8:26:30	0.34	46.85	0.06	0.42	2.06	ALM02852	

scg2	4/15/2009	8:26:45	0.31	47.05	0.05	0.34	2.04	ALM02852
scg2	4/15/2009	8:27:00	0.27	47.21	0.33	0.42	1.97	ALM02852
scg2	4/15/2009	8:27:15	0.26	47.35	0.34	0.31	1.97	ALM02852
o2zero1	4/15/2009	8:27:15	0.26	47.35	0.34	0.31	1.97	ALM02852
so2zero1	4/15/2009	8:27:15	0.26	47.35	0.34	0.31	1.97	ALM02852
cozero1	4/15/2009	8:26:15	0.39	46.45	0.44	0.33	2.12	ALM02852
noxspan1	4/15/2009	8:27:00	0.27	47.21	0.33	0.42	1.97	ALM02852
scg4	4/15/2009	8:27:45	0.25	47.53	0.53	0.3	1.93	ALM04147
scg4	4/15/2009	8:28:00	0.22	47.55	0.4	0.3	1.91	ALM04147
scg4	4/15/2009	8:28:15	0.18	47.63	0.03	0.38	1.84	ALM04147
scg4	4/15/2009	8:28:30	0.16	47.69	-0.2	0.57	1.78	ALM04147
scg4	4/15/2009	8:28:45	0.16	47.28	0.24	7.57	1.77	ALM04147
scg4	4/15/2009	8:29:00	0.15	43.42	0.38	21.39	1.71	ALM04147
scg4	4/15/2009	8:29:15	0.14	28.76	0.12	34.79	1.77	ALM04147
scg4	4/15/2009	8:29:30	0.13	12.39	0	38.87	1.79	ALM04147
scg4	4/15/2009	8:29:45	0.13	5.66	0.23	41.15	1.75	ALM04147
scg4	4/15/2009	8:30:00	0.13	2.89	0.48	42.19	1.68	ALM04147
scg4	4/15/2009	8:30:15	0.12	1.68	0.36	42.72	1.62	ALM04147
scg4	4/15/2009	8:30:30	0.13	1	0.11	42.99	1.66	ALM04147
scg4	4/15/2009	8:30:45	0.12	0.61	0.1	43.21	1.7	ALM04147
scg4	4/15/2009	8:31:00	0.12	0.39	0.4	43.22	1.6	ALM04147
scg4	4/15/2009	8:31:15	0.12	0.3	0.25	43.32	1.59	ALM04147
scg4	4/15/2009	8:31:30	0.12	0.22	-0.06	43.39	1.51	ALM04147
scg4	4/15/2009	8:31:45	0.12	0.22	-0.08	43.36	1.44	ALM04147
scg4	4/15/2009	8:32:00	0.12	0.22	-0.07	43.36	1.43	ALM04147
scg4	4/15/2009	8:32:15	0.12	0.2	0.07	43.54	1.46	ALM04147
scg4	4/15/2009	8:32:30	0.12	0.11	-0.12	43.39	1.5	ALM04147
noxzero1	4/15/2009	8:31:45	0.12	0.22	-0.08	43.36	1.44	ALM04147
cospan1	4/15/2009	8:30:30	0.13	1	0.11	42.99	1.66	ALM04147
scg9	4/15/2009	8:33:00	0.12	0.1	-0.13	43.3	1.52	ALM00690
scg9	4/15/2009	8:33:15	0.12	0.11	0.07	43.46	1.53	ALM00690
scg9	4/15/2009	8:33:30	0.12	0.1	0.12	43.39	1.59	ALM00690
scg9	4/15/2009	8:33:45	0.43	0.1	-0.18	43.06	1.6	ALM00690
scg9	4/15/2009	8:34:00	4.33	0.11	0.17	38.21	1.67	ALM00690
scg9	4/15/2009	8:34:15	8.65	0.21	-0.15	23.16	0.41	ALM00690
scg9	4/15/2009	8:34:30	10.57	0.22	-0.72	11.38	-0.26	ALM00690
scg9	4/15/2009	8:34:45	11.27	0.22	-0.51	3.7	-0.25	ALM00690
scg9	4/15/2009	8:35:00	11.57	0.22	-0.51	1.71	-0.13	ALM00690
scg9	4/15/2009	8:35:15	11.69	0.2	-0.28	0.83	-0.22	ALM00690
scg9	4/15/2009	8:35:30	11.76	0.11	-0.36	0.49	-0.1	ALM00690
scg9	4/15/2009	8:35:45	11.8	0.11	-0.53	0.31	-0.14	ALM00690
scg9	4/15/2009	8:36:00	11.82	0.12	-0.22	0.24	0.07	ALM00690
thczero1	4/15/2009	8:35:45	11.8	0.11	-0.53	0.31	-0.14	ALM00690
o2span1	4/15/2009	8:35:45	11.8	0.11	-0.53	0.31	-0.14	ALM00690
scg13	4/15/2009	8:36:15	11.83	0.12	-0.16	0.21	0.08	LL6768/cg
scg13	4/15/2009	8:36:30	11.83	0.12	-0.33	0.21	0.1	LL6768/cg
scg13	4/15/2009	8:36:45	11.85	0.11	-0.39	0.1	0.1	LL6768/cg
scg13	4/15/2009	8:37:00	11.85	0.11	-0.01	0.24	11.07	LL6768/cg
scg13	4/15/2009	8:37:15	11.77	0.36	-0.08	2.68	25.59	LL6768/cg
scg13	4/15/2009	8:37:30	11.71	3.05	-0.21	6.76	47.4	LL6768/cg
scg13	4/15/2009	8:37:45	11.68	9.36	0.15	10.22	52.92	LL6768/cg

scg13	4/15/2009	8:38:00	11.65	14.81	0.06	10.93	47.72	LL6768/cg
scg13	4/15/2009	8:38:15	11.66	17.82	-0.38	11.23	47.89	LL6768/cg
scg13	4/15/2009	8:38:30	11.71	18.66	-0.19	12.11	48.04	LL6768/cg
scg13	4/15/2009	8:38:45	11.82	18.98	-0.29	13.12	48.33	LL6768/cg
scg13	4/15/2009	8:39:00	12.14	19.31	-0.47	12.98	48.66	LL6768/cg
scg13	4/15/2009	8:39:15	12.4	19.97	-0.24	12.25	47.52	LL6768/cg
scg13	4/15/2009	8:39:30	12.61	20.71	-0.34	11.98	47.43	LL6768/cg
scg13	4/15/2009	8:39:45	12.73	20.83	-0.33	11.57	47.6	LL6768/cg
scg13	4/15/2009	8:40:00	12.84	20.7	-0.16	11.33	47.65	LL6768/cg
scg13	4/15/2009	8:40:15	12.92	20.54	-0.38	11.61	47.64	LL6768/cg
thcspan1	4/15/2009	8:40:00	12.84	20.7	-0.16	11.33	47.65	LL6768/cg
scg6	4/15/2009	8:40:30	12.97	20.39	-0.32	12.08	47.85	ALM05992
scg6	4/15/2009	8:40:45	12.98	20.24	-0.41	12.35	47.41	ALM05992
scg6	4/15/2009	8:41:00	13	20.15	-0.69	12.15	47.3	ALM05992
scg6	4/15/2009	8:41:15	14.25	20.06	-0.46	11.51	47.46	ALM05992
scg6	4/15/2009	8:41:30	10.96	19.25	-0.39	8.65	45.87	ALM05992
scg6	4/15/2009	8:41:45	4.6	15.2	0.26	4.07	45.35	ALM05992
scg6	4/15/2009	8:42:00	2.04	8.49	5.97	1.97	29.53	ALM05992
scg6	4/15/2009	8:42:15	1.2	3.11	18	1.14	0.75	ALM05992
scg6	4/15/2009	8:42:30	1	1.58	29.09	0.94	0.79	ALM05992
scg6	4/15/2009	8:42:45	1.07	1.22	34.39	1	0.42	ALM05992
scg6	4/15/2009	8:43:00	0.77	1.17	36.77	1	0.19	ALM05992
scg6	4/15/2009	8:43:15	0.56	1.31	38.09	0.88	0.13	ALM05992
scg6	4/15/2009	8:43:30	0.43	1.21	38.51	0.81	0.19	ALM05992
scg6	4/15/2009	8:43:45	0.33	0.89	41.57	0.67	0.27	ALM05992
scg6	4/15/2009	8:44:00	0.26	0.66	45.34	0.61	0.07	ALM05992
scg6	4/15/2009	8:44:15	0.21	0.52	45.91	0.51	-0.08	ALM05992
scg6	4/15/2009	8:44:30	0.19	0.51	46.31	0.51	-0.22	ALM05992
scg6	4/15/2009	8:44:45	0.17	0.62	46.3	0.51	-0.15	ALM05992
scg6	4/15/2009	8:45:00	0.16	0.63	45.22	0.53	-0.04	ALM05992
scg6	4/15/2009	8:45:15	0.15	0.61	45.16	0.54	-0.15	ALM05992
scg6	4/15/2009	8:45:30	0.14	0.57	44.84	0.54	-0.36	ALM05992
so2span1	4/15/2009	8:45:30	0.14	0.57	44.84	0.54	-0.36	ALM05992
run3	4/15/2009	8:51:00	11.6	15.36	2.9	13.11	-0.49	
run3	4/15/2009	8:51:15	11.59	15.34	8.08	13.84	-0.55	
run3	4/15/2009	8:51:30	11.56	15.26	9.18	13.56	-0.08	
run3	4/15/2009	8:51:45	11.57	15.27	8.53	13.48	0.31	
run3	4/15/2009	8:52:00	11.6	15.26	8.76	13.75	0.57	
run3	4/15/2009	8:52:15	11.61	15.26	8.41	14.08	0.52	
run3	4/15/2009	8:52:30	11.61	15.21	7.55	14.55	0.46	
run3	4/15/2009	8:52:45	11.6	15.16	7.36	14.93	0.42	
run3	4/15/2009	8:53:00	11.6	15.16	7.84	14.8	0.4	
run3	4/15/2009	8:53:15	11.59	15.16	7.46	14.7	0.37	
run3	4/15/2009	8:53:30	11.58	15.22	6.92	14.36	0.34	
run3	4/15/2009	8:53:45	11.61	15.26	7.06	14.81	0.36	
run3	4/15/2009	8:54:00	11.63	15.26	9.08	15.71	0.3	
run3	4/15/2009	8:54:15	11.61	15.18	10.52	15.77	0.26	
run3	4/15/2009	8:54:30	11.57	15.16	10.48	14.77	0.24	
run3	4/15/2009	8:54:45	11.52	15.27	8.4	13.37	0.33	
run3	4/15/2009	8:55:00	11.48	15.42	7.65	12.25	0.39	
run3	4/15/2009	8:55:15	11.5	15.56	7.69	11.76	0.4	

run3	4/15/2009	8:55:30	11.54	15.56	9.97	12.3	0.42
run3	4/15/2009	8:55:45	11.56	15.53	10.15	13.09	0.45
run3	4/15/2009	8:56:00	11.54	15.46	8.9	12.85	0.52
run3	4/15/2009	8:56:15	11.56	15.46	9.59	12.65	0.57
run3	4/15/2009	8:56:30	11.59	15.46	11.19	13.06	0.63
run3	4/15/2009	8:56:45	11.6	15.44	10.8	13.79	0.68
run3	4/15/2009	8:57:00	11.58	15.36	9.81	14.02	0.68
run3	4/15/2009	8:57:15	11.55	15.36	9.71	13.52	0.73
run3	4/15/2009	8:57:30	11.56	15.36	9	13.06	0.75
run3	4/15/2009	8:57:45	11.57	15.45	9.12	12.66	0.78
run3	4/15/2009	8:58:00	11.58	15.46	9.13	12.42	0.84
run3	4/15/2009	8:58:15	11.61	15.46	9.21	12.7	0.87
run3	4/15/2009	8:58:30	11.62	15.46	9.2	13.1	0.87
run3	4/15/2009	8:58:45	11.63	15.37	9.21	13.39	0.79
run3	4/15/2009	8:59:00	11.63	15.36	9.21	13.8	0.77
run3	4/15/2009	8:59:15	11.64	15.36	9.17	13.93	0.69
run3	4/15/2009	8:59:30	11.63	15.36	9.32	13.72	0.61
run3	4/15/2009	8:59:45	11.63	15.36	9	13.26	0.55
run3	4/15/2009	9:00:00	11.64	15.42	9.1	12.99	0.56
run3	4/15/2009	9:00:15	11.63	15.46	9.1	12.42	0.52
run3	4/15/2009	9:00:30	11.6	15.52	9.1	11.89	0.5
run3	4/15/2009	9:00:45	11.66	15.56	9.1	12.11	0.46
run3	4/15/2009	9:01:00	11.71	15.61	9.1	12.91	0.42
run3	4/15/2009	9:01:15	11.69	15.57	9.1	13.37	0.34
run3	4/15/2009	9:01:30	11.67	15.5	9.1	12.99	0.36
run3	4/15/2009	9:01:45	11.65	15.49	9.1	12.14	0.32
run3	4/15/2009	9:02:00	11.64	15.56	9.1	11.71	0.29
run3	4/15/2009	9:02:15	11.67	15.56	9.1	12.03	0.26
run3	4/15/2009	9:02:30	11.68	15.56	9.1	12.65	0.17
run3	4/15/2009	9:02:45	11.68	15.56	9.1	13.24	0.07
run3	4/15/2009	9:03:00	11.7	15.56	9.1	13.72	-0.01
run3	4/15/2009	9:03:15	11.69	15.53	9.1	13.97	-0.04
run3	4/15/2009	9:03:30	11.68	15.46	9.1	13.81	-0.06
run3	4/15/2009	9:03:45	11.67	15.49	9.1	13.37	-0.05
run3	4/15/2009	9:04:00	11.64	15.56	9.22	12.75	-0.04
run3	4/15/2009	9:04:15	11.63	15.56	9.18	11.82	-0.02
run3	4/15/2009	9:04:30	11.65	15.56	9.01	11.52	-0.02
run3	4/15/2009	9:04:45	11.67	15.56	9	11.95	-0.02
run3	4/15/2009	9:05:00	11.66	15.56	9.12	12.25	0
run3	4/15/2009	9:05:15	11.65	15.46	9.21	12.1	0.02
run3	4/15/2009	9:05:30	11.66	15.4	8.99	11.81	0.06
run3	4/15/2009	9:05:45	11.65	15.36	8.9	11.48	0.1
run3	4/15/2009	9:06:00	11.62	15.36	8.99	11.33	0.1
run3	4/15/2009	9:06:15	11.63	15.36	9	11.39	0.17
run3	4/15/2009	9:06:30	11.64	15.36	9.1	11.62	0.18
run3	4/15/2009	9:06:45	11.63	15.36	9.21	11.59	0.2
run3	4/15/2009	9:07:00	11.61	15.36	9.22	11.37	0.21
run3	4/15/2009	9:07:15	11.64	15.45	9.21	11.78	0.19
run3	4/15/2009	9:07:30	11.68	15.4	9.2	12.47	0.23
run3	4/15/2009	9:07:45	11.66	15.27	8.99	12.69	0.2
run3	4/15/2009	9:08:00	11.66	15.26	8.99	12.29	0.28

run3	4/15/2009	9:08:15	11.68	15.26	9	12.02	0.32
run3	4/15/2009	9:08:30	11.72	15.26	9.01	12.23	0.31
run3	4/15/2009	9:08:45	11.71	15.26	9	12.24	0.29
run3	4/15/2009	9:09:00	11.7	15.26	9.01	12.12	0.33
run3	4/15/2009	9:09:15	11.72	15.36	8.99	12.3	0.38
run3	4/15/2009	9:09:30	11.73	15.36	9.01	12.77	0.43
run3	4/15/2009	9:09:45	11.7	15.36	9.11	12.51	0.45
run3	4/15/2009	9:10:00	11.71	15.36	9	12.08	0.5
run3	4/15/2009	9:10:15	11.75	15.45	9.11	12.4	0.53
run3	4/15/2009	9:10:30	11.75	15.46	9.1	12.55	0.56
run3	4/15/2009	9:10:45	11.73	15.36	8.99	12.2	0.62
run3	4/15/2009	9:11:00	11.74	15.36	8.92	12.17	0.63
run3	4/15/2009	9:11:15	11.74	15.39	9	12.43	0.68
run3	4/15/2009	9:11:30	11.73	15.46	9.01	12.56	0.69
run3	4/15/2009	9:11:45	11.73	15.46	9.11	12.58	0.69
run3	4/15/2009	9:12:00	11.73	15.46	9.01	12.65	0.76
run3	4/15/2009	9:12:15	11.72	15.37	9	12.67	0.77
run3	4/15/2009	9:12:30	11.73	15.43	9	12.85	0.81
run3	4/15/2009	9:12:45	11.72	15.46	9.12	13.13	0.86
run3	4/15/2009	9:13:00	11.74	15.46	9.21	13.46	0.9
run3	4/15/2009	9:13:15	11.77	15.43	9.2	14.33	0.91
run3	4/15/2009	9:13:30	11.77	15.36	9.15	14.98	0.94
run3	4/15/2009	9:13:45	11.75	15.33	9.15	14.97	0.98
run3	4/15/2009	9:14:00	11.73	15.26	9.15	14.1	1.05
run3	4/15/2009	9:14:15	11.75	15.35	9.15	13.99	1.06
run3	4/15/2009	9:14:30	11.76	15.36	9.15	14.81	1.1
run3	4/15/2009	9:14:45	11.71	15.33	9.15	15.08	1.14
run3	4/15/2009	9:15:00	11.72	15.26	9.15	14.9	1.18
run3	4/15/2009	9:15:15	11.74	15.26	9.15	15.16	1.18
run3	4/15/2009	9:15:30	11.73	15.26	9.15	15.27	1.22
run3	4/15/2009	9:15:45	11.7	15.17	9.15	15.05	1.24
run3	4/15/2009	9:16:00	11.66	15.16	9.15	14.1	1.26
run3	4/15/2009	9:16:15	11.66	15.26	9.15	13.39	1.26
run3	4/15/2009	9:16:30	11.67	15.26	9.15	13.26	1.29
run3	4/15/2009	9:16:45	11.68	15.26	9.15	13.23	1.3
run3	4/15/2009	9:17:00	11.67	15.2	9.15	13.12	1.31
run3	4/15/2009	9:17:15	11.66	15.16	9.15	12.99	-0.65
run3	4/15/2009	9:17:30	11.67	15.23	9.15	13.41	-0.64
run3	4/15/2009	9:17:45	11.66	15.24	9.15	13.96	-0.66
run3	4/15/2009	9:18:00	11.64	15.17	9.15	13.7	-0.68
run3	4/15/2009	9:18:15	11.6	15.16	9.15	12.82	-0.66
run3	4/15/2009	9:18:30	11.56	15.23	9.15	11.98	-0.64
run3	4/15/2009	9:18:45	11.59	15.3	9.15	11.62	-0.65
run3	4/15/2009	9:19:00	11.61	15.36	9.15	12.04	-0.61
run3	4/15/2009	9:19:15	11.62	15.26	9.15	12.57	-0.58
run3	4/15/2009	9:19:30	11.62	15.2	9.15	12.96	-0.5
run3	4/15/2009	9:19:45	11.65	15.17	9.15	13.54	-0.47
run3	4/15/2009	9:20:00	11.69	15.16	9.15	14.46	-0.49
run3	4/15/2009	9:20:15	11.66	15.14	9.15	14.92	-0.48
run3	4/15/2009	9:20:30	11.62	15.07	9.15	14.45	-0.57
run3	4/15/2009	9:20:45	11.61	15.1	9.15	14.02	-0.6

run3	4/15/2009	9:21:00	11.64	15.16	9.15	14.15	-0.67
run3	4/15/2009	9:21:15	11.64	15.16	9.15	14.42	-0.75
run3	4/15/2009	9:21:30	11.61	15.16	9.15	14.21	-0.9
run3	4/15/2009	9:21:45	11.63	15.16	9.15	14.35	-1.02
run3	4/15/2009	9:22:00	11.63	15.16	9.15	14.75	-0.99
run3	4/15/2009	9:22:15	11.63	15.04	9.15	15.02	-1.03
run3	4/15/2009	9:22:30	11.64	14.97	9.15	14.96	-1.04
run3	4/15/2009	9:22:45	11.66	15	9.15	15.05	-1.02
run3	4/15/2009	9:23:00	11.65	15.07	9.15	15.36	-0.96
run3	4/15/2009	9:23:15	11.62	15.07	9.15	14.93	-0.91
run3	4/15/2009	9:23:30	11.62	15.07	9.15	14.42	-0.86
run3	4/15/2009	9:23:45	11.64	15.17	9.15	14.44	-0.83
run3	4/15/2009	9:24:00	11.64	15.16	9.15	14.85	-0.77
run3	4/15/2009	9:24:15	11.63	15.07	9.15	14.92	-0.76
run3	4/15/2009	9:24:30	11.59	15.07	9.15	14.22	-0.71
run3	4/15/2009	9:24:45	11.56	15.16	9.15	13.21	-0.7
run3	4/15/2009	9:25:00	11.58	15.23	9.15	12.94	-0.62
run3	4/15/2009	9:25:15	11.59	15.26	9.15	13.32	-0.67
run3	4/15/2009	9:25:30	11.57	15.26	9.15	13.23	-0.64
run3	4/15/2009	9:25:45	11.58	15.16	9.15	13.23	-0.55
run3	4/15/2009	9:26:00	11.58	15.16	9.15	13.28	-0.56
run3	4/15/2009	9:26:15	11.59	15.17	9.15	13.37	-0.49
run3	4/15/2009	9:26:30	11.61	15.16	9.15	13.93	-0.45
run3	4/15/2009	9:26:45	11.62	15.13	9.15	14.65	-0.47
run3	4/15/2009	9:27:00	11.63	15.07	9.15	14.64	-0.4
run3	4/15/2009	9:27:15	11.64	14.97	9.15	14.09	-0.4
run3	4/15/2009	9:27:30	11.62	14.97	9.15	13.71	-0.38
run3	4/15/2009	9:27:45	11.61	14.97	9.15	13.57	-0.34
run3	4/15/2009	9:28:00	11.59	14.97	9.15	13.39	-0.35
run3	4/15/2009	9:28:15	11.58	14.97	9.15	13.23	-0.31
run3	4/15/2009	9:28:30	11.57	15.03	9.15	13.11	-0.3
run3	4/15/2009	9:28:45	11.59	15.07	9.15	13.33	-0.28
run3	4/15/2009	9:29:00	11.6	15.07	9.15	14.07	-0.23
run3	4/15/2009	9:29:15	11.59	15.03	9.15	14.22	-0.23
run3	4/15/2009	9:29:30	11.59	15.03	9.15	14.03	-0.18
run3	4/15/2009	9:29:45	11.58	15.07	9.15	14.07	-0.22
run3	4/15/2009	9:30:00	11.57	15.07	9.15	13.95	-0.22
run3	4/15/2009	9:30:15	11.57	15.07	9.15	13.68	-0.18
run3	4/15/2009	9:30:30	11.57	15.13	9.15	13.68	-0.2
run3	4/15/2009	9:30:45	11.6	15.16	9.15	13.83	-0.17
run3	4/15/2009	9:31:00	11.63	15.16	9.15	14.54	-0.13
run3	4/15/2009	9:31:15	11.64	15.07	9.15	15.48	-0.09
run3	4/15/2009	9:31:30	11.63	15	9.15	15.72	-0.11
run3	4/15/2009	9:31:45	11.57	14.97	9.15	14.66	-0.09
run3	4/15/2009	9:32:00	11.57	15.04	9.15	13.76	-0.03
run3	4/15/2009	9:32:15	11.56	15.07	9.15	13.59	-0.04
run3	4/15/2009	9:32:30	11.53	15.14	9.15	13.1	-0.07
run3	4/15/2009	9:32:45	11.5	15.16	9.15	12.58	0.01
run3	4/15/2009	9:33:00	11.5	15.16	9.15	12.04	0.01
run3	4/15/2009	9:33:15	11.5	15.16	9.15	11.97	0.02
run3	4/15/2009	9:33:30	11.5	15.16	9.15	12.2	0.1

run3	4/15/2009	9:33:45	11.53	15.13	9.15	12.76	0.08
run3	4/15/2009	9:34:00	11.58	15.07	9.15	13.87	0.09
run3	4/15/2009	9:34:15	11.58	14.97	9.15	15.01	0.09
run3	4/15/2009	9:34:30	11.58	14.9	9.15	15.03	0.04
run3	4/15/2009	9:34:45	11.56	14.87	9.15	14.63	0.1
run3	4/15/2009	9:35:00	11.58	14.87	9.15	14.4	0.14
run3	4/15/2009	9:35:15	11.59	14.97	9.15	14.52	0.06
run3	4/15/2009	9:35:30	11.58	14.97	9.15	14.36	0.03
run3	4/15/2009	9:35:45	11.57	14.97	9.15	13.98	0.01
run3	4/15/2009	9:36:00	11.57	14.97	9.15	13.53	0
run3	4/15/2009	9:36:15	11.55	14.97	9.15	13.33	0
run3	4/15/2009	9:36:30	11.56	14.97	9.15	13.25	-0.01
run3	4/15/2009	9:36:45	11.54	15	9.15	13.04	0.01
run3	4/15/2009	9:37:00	11.56	15.06	9.15	13.14	-0.1
run3	4/15/2009	9:37:15	11.54	14.97	9.15	13.08	-0.11
run3	4/15/2009	9:37:30	11.48	14.97	9.15	12.36	-0.09
run3	4/15/2009	9:37:45	11.47	15.1	9.15	11.5	-0.05
run3	4/15/2009	9:38:00	11.49	15.17	9.15	10.96	-0.07
run3	4/15/2009	9:38:15	11.51	15.3	9.15	11.07	-0.05
run3	4/15/2009	9:38:30	11.52	15.29	9.15	11.37	-0.04
run3	4/15/2009	9:38:45	11.56	15.23	9.15	12.15	-0.09
run3	4/15/2009	9:39:00	11.61	15.16	9.15	13.63	-0.16
run3	4/15/2009	9:39:15	11.63	15.07	9.15	14.66	-0.2
run3	4/15/2009	9:39:30	11.63	15	9.15	14.75	-0.15
run3	4/15/2009	9:39:45	11.65	14.97	9.15	14.68	-0.05
run3	4/15/2009	9:40:00	11.66	14.97	9.15	15.05	-0.15
run3	4/15/2009	9:40:15	11.66	14.97	9.15	15.27	-0.21
run3	4/15/2009	9:40:30	11.64	14.97	9.15	15.06	-0.19
run3	4/15/2009	9:40:45	11.64	14.97	9.15	14.52	-0.21
run3	4/15/2009	9:41:00	11.63	14.97	9.15	14.08	-0.2
run3	4/15/2009	9:41:15	11.6	15.01	9.15	13.77	-0.16
run3	4/15/2009	9:41:30	11.52	15.07	9.15	13.05	-0.23
run3	4/15/2009	9:41:45	11.54	15.11	9.15	12.08	-0.24
run3	4/15/2009	9:42:00	11.57	15.24	9.15	12	-0.24
run3	4/15/2009	9:42:15	11.62	15.22	9.15	12.43	-0.31
run3	4/15/2009	9:42:30	11.63	15.16	9.15	13.06	-0.28
run3	4/15/2009	9:42:45	11.59	15.07	9.15	13.18	-0.26
run3	4/15/2009	9:43:00	11.61	15.07	9.15	13.13	-0.3
run3	4/15/2009	9:43:15	11.65	15.11	9.15	13.62	-0.33
run3	4/15/2009	9:43:30	11.63	15.16	9.15	13.78	-0.32
run3	4/15/2009	9:43:45	11.57	15.17	9.15	12.98	-0.43
run3	4/15/2009	9:44:00	11.55	15.17	9.15	12.13	-0.45
run3	4/15/2009	9:44:15	11.57	15.3	9.15	11.99	-0.46
run3	4/15/2009	9:44:30	11.59	15.36	9.15	12.24	-0.42
run3	4/15/2009	9:44:45	11.63	15.36	9.15	12.93	-0.38
run3	4/15/2009	9:45:00	11.67	15.35	9.15	14.07	-0.39
run3	4/15/2009	9:45:15	11.67	15.22	9.15	15.03	-0.42
run3	4/15/2009	9:45:30	11.64	15.09	9.15	14.91	-0.43
run3	4/15/2009	9:45:45	11.6	15.07	9.15	14.22	-0.43
run3	4/15/2009	9:46:00	11.57	15.14	9.15	13.26	-0.48
run3	4/15/2009	9:46:15	11.54	15.21	9.15	12.4	-0.53

run3	4/15/2009	9:46:30	11.56	15.34	9.15	11.99	-0.52
run3	4/15/2009	9:46:45	11.58	15.36	9.15	12.08	-0.57
run3	4/15/2009	9:47:00	11.61	15.35	9.15	12.43	-0.59
run3	4/15/2009	9:47:15	11.6	15.26	9.15	12.58	-0.69
run3	4/15/2009	9:47:30	11.61	15.26	9.15	12.71	-0.79
run3	4/15/2009	9:47:45	11.57	15.26	9.15	12.22	-0.77
run3	4/15/2009	9:48:00	11.54	15.26	9.15	11.45	-0.79
run3	4/15/2009	9:48:15	11.57	15.3	9.15	11.5	-0.77
run3	4/15/2009	9:48:30	11.6	15.29	9.15	12.17	-0.72
run3	4/15/2009	9:48:45	11.63	15.26	9.15	12.68	-0.69
run3	4/15/2009	9:49:00	11.67	15.25	9.15	13.34	-0.6
run3	4/15/2009	9:49:15	11.7	15.16	9.15	14.14	-0.51
run3	4/15/2009	9:49:30	11.7	15.16	9.15	14.7	-0.58
run3	4/15/2009	9:49:45	11.67	15.07	9.15	14.42	-0.56
run3	4/15/2009	9:50:00	11.67	15.08	9.15	13.82	-0.46
run3	4/15/2009	9:50:15	11.69	15.16	9.15	13.48	-0.39
run3	4/15/2009	9:50:30	11.7	15.16	9.15	13.87	-0.34
run3	4/15/2009	9:50:45	11.71	15.16	9.15	14.43	-0.33
run3	4/15/2009	9:51:00	11.69	15.16	9.15	14.62	-0.34
run3	4/15/2009	9:51:15	11.66	15.16	9.15	14.36	-0.31
run3	4/15/2009	9:51:30	11.65	15.16	9.15	13.78	-0.22
run3	4/15/2009	9:51:45	11.62	15.21	9.15	13.17	-0.15
run3	4/15/2009	9:52:00	11.62	15.26	9.15	12.92	-0.16
run3	4/15/2009	9:52:15	11.61	15.26	9.15	12.99	-0.12
run3	4/15/2009	9:52:30	11.59	15.26	9.15	12.99	-0.07
run3	4/15/2009	9:52:45	11.6	15.26	9.15	12.92	-0.06
run3	4/15/2009	9:53:00	11.6	15.25	9.15	13.04	-0.02
run3	4/15/2009	9:53:15	11.61	15.17	9.15	13.32	0.05
run3	4/15/2009	9:53:30	11.61	15.09	9.15	13.41	0.05
run3	4/15/2009	9:53:45	11.6	15.07	9.15	13.17	0.08
run3	4/15/2009	9:54:00	11.61	15.07	9.15	13	0.11
run3	4/15/2009	9:54:15	11.57	15.11	9.15	12.83	0.19
run3	4/15/2009	9:54:30	11.55	15.16	9.15	12.38	0.13
run3	4/15/2009	9:54:45	11.6	15.21	9.15	12.87	0.18
run3	4/15/2009	9:55:00	11.62	15.26	9.15	13.73	0.16
run3	4/15/2009	9:55:15	11.59	15.16	9.15	13.62	0.13
run3	4/15/2009	9:55:30	11.55	15.16	9.15	12.67	0.18
run3	4/15/2009	9:55:45	11.57	15.21	9.15	12.23	0.27
run3	4/15/2009	9:56:00	11.61	15.26	9.15	12.57	0.31
run3	4/15/2009	9:56:15	11.66	15.22	9.15	13.67	0.37
run3	4/15/2009	9:56:30	11.67	15.15	9.15	14.86	0.29
run3	4/15/2009	9:56:45	11.67	15.02	9.15	15.21	0.29
run3	4/15/2009	9:57:00	11.67	14.97	9.15	15.16	0.3
run3	4/15/2009	9:57:15	11.66	14.97	9.15	14.99	0.33
run3	4/15/2009	9:57:30	11.64	14.98	9.15	14.31	0.39
run3	4/15/2009	9:57:45	11.61	15.07	9.15	13.7	0.36
run3	4/15/2009	9:58:00	11.58	15.07	9.15	13.22	0.48
run3	4/15/2009	9:58:15	11.54	15.07	9.15	12.6	0.44
run3	4/15/2009	9:58:30	11.52	15.14	9.15	11.86	0.42
run3	4/15/2009	9:58:45	11.53	15.21	9.15	11.68	0.43
run3	4/15/2009	9:59:00	11.56	15.26	9.15	12.25	0.55

run3	4/15/2009	9:59:15	11.58	15.22	9.15	13.01	0.49	
run3	4/15/2009	9:59:30	11.56	15.15	9.15	13.39	0.44	
run3	4/15/2009	9:59:45	11.55	15.07	9.15	12.96	0.34	
averun3	4/15/2009	9:00:00	11.63	15.21	9.2	13.32	-0.04	60
scg2	4/15/2009	10:00:15	11.58	15.12	12.08	13.14	0.41	ALM02852
scg2	4/15/2009	10:00:30	11.58	15.07	11.84	13.12	0.39	ALM02852
scg2	4/15/2009	10:00:45	11.13	15.07	11.76	13.13	0.55	ALM02852
scg2	4/15/2009	10:01:00	6.69	14.89	11.79	11.15	0.63	ALM02852
scg2	4/15/2009	10:01:15	2.57	14.54	12.69	6.76	0.58	ALM02852
scg2	4/15/2009	10:01:30	1.18	14.47	17.38	2.87	0.68	ALM02852
scg2	4/15/2009	10:01:45	0.74	18.5	19.35	1.23	0.65	ALM02852
scg2	4/15/2009	10:02:00	0.57	25.15	15.04	0.81	0.65	ALM02852
scg2	4/15/2009	10:02:15	0.51	28.94	9.97	0.71	0.68	ALM02852
scg2	4/15/2009	10:02:30	0.45	29.46	7.57	0.69	0.69	ALM02852
scg2	4/15/2009	10:02:45	0.41	29.61	5.91	0.61	0.69	ALM02852
scg2	4/15/2009	10:03:00	0.36	29.68	4.95	0.59	0.77	ALM02852
scg2	4/15/2009	10:03:15	0.31	29.74	4.48	0.51	0.76	ALM02852
scg2	4/15/2009	10:03:30	0.26	47.05	4.2	0.42	0.75	ALM02852
scg2	4/15/2009	10:03:45	0.23	47.2	3.87	0.42	0.88	ALM02852
scg2	4/15/2009	10:04:00	0.2	47.34	3.69	0.39	0.81	ALM02852
scg2	4/15/2009	10:04:15	0.19	47.45	0.6	0.3	0.88	ALM02852
scg2	4/15/2009	10:04:30	0.17	47.45	0.13	0.31	0.03	ALM02852
scg2	4/15/2009	10:04:45	0.17	47.49	0.12	0.3	0.03	ALM02852
scg2	4/15/2009	10:05:00	0.16	47.55	0.01	0.31	0	ALM02852
o2zero1	4/15/2009	10:04:30	0.17	47.45	0.13	0.31	0.03	ALM02852
so2zero1	4/15/2009	10:04:45	0.17	47.49	0.12	0.3	0.03	ALM02852
cozero1	4/15/2009	10:04:30	0.17	47.45	0.13	0.31	0.03	ALM02852
noxspan1	4/15/2009	10:04:30	0.17	47.45	0.13	0.31	0.03	ALM02852
scg4	4/15/2009	10:05:15	0.15	47.55	0.05	0.3	0.01	ALM04147
scg4	4/15/2009	10:05:30	0.15	47.55	0.2	0.28	-0.01	ALM04147
scg4	4/15/2009	10:05:45	0.66	47.55	0.12	0.25	-0.02	ALM04147
scg4	4/15/2009	10:06:00	2	47.25	0.09	0.31	0.12	ALM04147
scg4	4/15/2009	10:06:15	0.66	46.4	0.11	1.71	-0.01	ALM04147
scg4	4/15/2009	10:06:30	0.3	45.35	0.16	13.82	-0.03	ALM04147
scg4	4/15/2009	10:06:45	0.2	35.51	0.24	28.56	0.06	ALM04147
scg4	4/15/2009	10:07:00	0.16	18.04	0.26	37.77	0.02	ALM04147
scg4	4/15/2009	10:07:15	0.14	6.58	0.25	40.61	0.08	ALM04147
scg4	4/15/2009	10:07:30	0.13	3.27	0.18	41.51	0.09	ALM04147
scg4	4/15/2009	10:07:45	0.13	1.94	0.03	42	0.13	ALM04147
scg4	4/15/2009	10:08:00	0.12	1.4	0.07	42.33	0.14	ALM04147
scg4	4/15/2009	10:08:15	0.11	1.02	0.23	42.49	0.15	ALM04147
scg4	4/15/2009	10:08:30	0.11	0.82	0.01	42.64	0.13	ALM04147
scg4	4/15/2009	10:08:45	0.11	0.62	0.09	42.7	0.08	ALM04147
scg4	4/15/2009	10:09:00	0.11	0.5	0.11	42.78	0.15	ALM04147
scg4	4/15/2009	10:09:15	0.11	0.44	0.26	42.84	0.2	ALM04147
scg4	4/15/2009	10:09:30	0.11	0.34	0.57	42.88	0.05	ALM04147
noxzero1	4/15/2009	10:09:30	0.11	0.34	0.57	42.88	0.05	ALM04147
cospan1	4/15/2009	10:08:30	0.11	0.82	0.01	42.64	0.13	ALM04147
scg6	4/15/2009	10:09:45	0.11	0.32	0.19	42.88	0.12	ALM05992
scg6	4/15/2009	10:10:00	0.11	0.24	0.1	42.91	0.22	ALM05992
scg6	4/15/2009	10:10:15	0.15	0.22	0.45	42.92	0.39	ALM05992

scg6	4/15/2009	10:10:30	0.53	0.22	0.85	42.49	0.28	ALM05992
scg6	4/15/2009	10:10:45	0.26	0.22	0.43	41.44	0.28	ALM05992
scg6	4/15/2009	10:11:00	0.16	0.22	0.18	31.14	0.2	ALM05992
scg6	4/15/2009	10:11:15	0.13	0.27	2.8	16.93	0.1	ALM05992
scg6	4/15/2009	10:11:30	0.11	0.42	14.63	7.08	0.09	ALM05992
scg6	4/15/2009	10:11:45	0.11	0.44	31.8	3.41	-0.01	ALM05992
scg6	4/15/2009	10:12:00	0.1	0.42	44.18	2.13	-0.06	ALM05992
scg6	4/15/2009	10:12:15	0.1	0.42	50.76	1.63	-0.19	ALM05992
scg6	4/15/2009	10:12:30	3.09	0.42	54.34	1.25	-0.18	ALM05992
scg6	4/15/2009	10:12:45	13.98	0.42	50.62	0.96	-0.31	ALM05992
scg6	4/15/2009	10:13:00	18.2	0.32	40.91	0.7	-0.27	ALM05992
scg6	4/15/2009	10:13:15	19.51	0.2	24.4	0.51	-0.22	ALM05992
scg6	4/15/2009	10:13:30	20.01	0.12	24.5	0.39	-0.33	ALM05992
scg6	4/15/2009	10:13:45	20.18	0.12	44.28	0.26	-0.32	ALM05992
scg6	4/15/2009	10:14:00	20.29	0.03	44.32	0.31	-0.34	ALM05992
scg6	4/15/2009	10:14:15	20.54	0.01	44.46	0.26	-0.5	ALM05992
so2span1	4/15/2009	10:12:00	0.1	0.42	44.18	2.13	-0.06	ALM05992
scg9	4/15/2009	10:14:45	20.49	0.01	2.8	0.28	-0.31	ALM00690
scg9	4/15/2009	10:15:00	20.51	0.01	2.79	0.21	-0.46	ALM00690
scg9	4/15/2009	10:15:15	20.61	0	4.16	0.21	-0.39	ALM00690
scg9	4/15/2009	10:15:30	20.67	0.01	3.08	0.22	-0.6	ALM00690
scg9	4/15/2009	10:15:45	20.62	0	2.65	0.22	-0.53	ALM00690
scg9	4/15/2009	10:16:00	20.58	0	1.91	0.22	-0.49	ALM00690
scg9	4/15/2009	10:16:15	18.85	0.01	1.97	0.14	-0.56	ALM00690
scg9	4/15/2009	10:16:30	14.33	0.01	2.33	0.01	-0.59	ALM00690
scg9	4/15/2009	10:16:45	12.68	0.06	2.57	0.01	-0.65	ALM00690
scg9	4/15/2009	10:17:00	12.2	0.11	9.47	0.03	-0.57	ALM00690
scg9	4/15/2009	10:17:15	12.02	0.12	14.53	0.03	-0.67	ALM00690
scg9	4/15/2009	10:17:30	12.03	0.12	12.27	0.03	-0.65	ALM00690
scg9	4/15/2009	10:17:45	14.74	0.11	10.18	0.03	-0.7	ALM00690
thczero1	4/15/2009	10:16:00	20.58	0	1.91	0.22	-0.49	ALM00690
o2span1	4/15/2009	10:17:30	12.03	0.12	12.27	0.03	-0.65	ALM00690
scg13	4/15/2009	10:18:15	12.26	0.12	8.42	0.01	-0.5	LL6768/cg
scg13	4/15/2009	10:18:30	12.9	0.11	3.75	0.08	10.58	LL6768/cg
scg13	4/15/2009	10:18:45	16.16	0.12	2.81	0.08	23.37	LL6768/cg
scg13	4/15/2009	10:19:00	14.09	0.12	5.31	0.16	23.93	LL6768/cg
scg13	4/15/2009	10:19:15	12.47	0.51	3.53	1.9	24.43	LL6768/cg
scg13	4/15/2009	10:19:30	11.9	2.93	0.79	6.07	29	LL6768/cg
scg13	4/15/2009	10:19:45	11.71	8.63	6.9	8.66	46.68	LL6768/cg
scg13	4/15/2009	10:20:00	11.68	14.42	13.06	9.84	46.93	LL6768/cg
scg13	4/15/2009	10:20:15	11.67	17.35	17.03	10.26	46.94	LL6768/cg
scg13	4/15/2009	10:20:30	11.78	18.01	18.23	11.11	46.88	LL6768/cg
thcspan1	4/15/2009	10:20:30	11.78	18.01	18.23	11.11	46.88	LL6768/cg
run4	4/15/2009	10:25:30	11.62	23.41	8.47	11.94	45.41	
run4	4/15/2009	10:25:45	11.65	23.48	7.98	11.84	45.37	
run4	4/15/2009	10:26:00	11.67	23.59	8.37	12.06	45.52	
run4	4/15/2009	10:26:15	11.66	23.52	8.7	12.4	45.46	
run4	4/15/2009	10:26:30	11.66	23.52	8.4	12.76	45.49	
run4	4/15/2009	10:26:45	11.64	23.52	8.21	12.71	45.42	
run4	4/15/2009	10:27:00	11.61	23.52	8.91	12.28	45.48	
run4	4/15/2009	10:27:15	11.62	15.4	9.73	12.12	45.38	

run4	4/15/2009	10:27:30	11.63	7.75	9.15	12.08	-93.3
run4	4/15/2009	10:27:45	11.61	3.03	9.16	12.08	-93.99
run4	4/15/2009	10:28:00	11.58	1.32	9.08	11.81	-6.14
run4	4/15/2009	10:28:15	11.54	0.65	9.16	11.33	-0.01
run4	4/15/2009	10:28:30	11.51	0.33	9.41	10.5	0
run4	4/15/2009	10:28:45	11.5	0.11	8.82	9.86	0
run4	4/15/2009	10:29:00	11.52	0.01	8.74	9.26	0
run4	4/15/2009	10:29:15	11.5	-0.01	9.13	8.77	0
run4	4/15/2009	10:29:30	11.48	-0.02	8.56	8.76	0
run4	4/15/2009	10:29:45	11.5	-0.03	7.98	8.95	0
run4	4/15/2009	10:30:00	11.49	-0.03	8.23	9.32	0
run4	4/15/2009	10:30:15	11.52	-0.03	8.71	9.56	0
run4	4/15/2009	10:30:30	11.52	-0.03	9.01	9.96	0
run4	4/15/2009	10:30:45	11.56	-0.03	9.06	10.28	0
run4	4/15/2009	10:31:00	11.57	-0.03	8.76	10.68	0
run4	4/15/2009	10:31:15	11.59	-0.03	8.39	10.9	0
run4	4/15/2009	10:31:30	11.6	-0.02	8.75	11.17	0
run4	4/15/2009	10:31:45	11.64	-0.03	9.03	11.5	0
run4	4/15/2009	10:32:00	11.65	-0.03	9.26	11.76	0
run4	4/15/2009	10:32:15	11.61	-0.03	9.49	11.64	0
run4	4/15/2009	10:32:30	11.58	-0.02	9.51	11.27	0
run4	4/15/2009	10:32:45	11.53	-0.03	9.61	10.74	0
run4	4/15/2009	10:33:00	11.54	-0.03	9.49	10.14	0
run4	4/15/2009	10:33:15	11.62	-0.02	9.65	10.58	0
run4	4/15/2009	10:33:30	11.68	-0.03	9.69	11.75	0
run4	4/15/2009	10:33:45	11.72	-0.02	9.57	12.55	0
run4	4/15/2009	10:34:00	11.7	-0.03	9.33	13.15	0
run4	4/15/2009	10:34:15	11.7	-0.03	9.56	13.28	0
run4	4/15/2009	10:34:30	11.7	-0.03	9.42	13.37	0
run4	4/15/2009	10:34:45	11.66	-0.03	9.39	13.26	0
run4	4/15/2009	10:35:00	11.62	-0.03	9.62	12.61	0
run4	4/15/2009	10:35:15	11.57	-0.02	9.56	11.81	0
run4	4/15/2009	10:35:30	11.52	-0.03	9.33	10.6	0
run4	4/15/2009	10:35:45	11.56	-0.03	9.06	10.18	0
run4	4/15/2009	10:36:00	11.59	-0.02	9.42	10.54	0
run4	4/15/2009	10:36:15	11.62	-0.03	9.56	11.2	0.01
run4	4/15/2009	10:36:30	11.62	-0.03	8.85	11.83	0
run4	4/15/2009	10:36:45	11.67	-0.03	9.57	12.25	0
run4	4/15/2009	10:37:00	11.72	-0.03	9.68	13.11	0
run4	4/15/2009	10:37:15	11.75	-0.03	9.67	13.57	0
run4	4/15/2009	10:37:30	11.72	-0.03	9.37	13.5	-0.01
run4	4/15/2009	10:37:45	11.67	-0.03	9.37	12.62	0
run4	4/15/2009	10:38:00	11.68	-0.03	9.49	11.84	0
run4	4/15/2009	10:38:15	11.7	-0.03	9.8	11.98	0
run4	4/15/2009	10:38:30	11.69	-0.03	10.11	12.48	0
run4	4/15/2009	10:38:45	11.72	-0.03	10.21	12.95	0
run4	4/15/2009	10:39:00	11.73	-0.03	9.72	13.68	0
run4	4/15/2009	10:39:15	11.72	-0.03	9.54	13.74	0
run4	4/15/2009	10:39:30	11.71	-0.03	9.84	13.34	0
run4	4/15/2009	10:39:45	11.74	-0.03	9.85	13.48	-0.01
run4	4/15/2009	10:40:00	11.77	-0.03	9.53	14.03	-0.01

run4	4/15/2009	10:40:15	11.78	-0.02	9.73	14.49	0
run4	4/15/2009	10:40:30	11.79	-0.03	9.99	14.83	0
run4	4/15/2009	10:40:45	11.78	-0.03	10.18	14.77	0
run4	4/15/2009	10:41:00	11.75	-0.03	10.06	14.79	0
run4	4/15/2009	10:41:15	11.69	-0.03	9.78	14.41	0
run4	4/15/2009	10:41:30	11.65	-0.03	9.97	13.51	-0.01
run4	4/15/2009	10:41:45	11.66	-0.03	10.46	12.98	0
run4	4/15/2009	10:42:00	11.7	-0.03	10.34	12.84	-0.01
run4	4/15/2009	10:42:15	11.75	-0.03	10.27	13.26	-0.01
run4	4/15/2009	10:42:30	11.79	-0.02	9.46	14.14	0
run4	4/15/2009	10:42:45	11.81	-0.03	9.91	14.6	0
run4	4/15/2009	10:43:00	11.78	-0.02	10.01	14.46	-0.01
run4	4/15/2009	10:43:15	11.77	-0.03	9.21	14.2	-0.01
run4	4/15/2009	10:43:30	11.78	-0.03	9.56	14.33	-0.01
run4	4/15/2009	10:43:45	11.76	-0.03	9.48	14.54	-0.01
run4	4/15/2009	10:44:00	11.74	-0.03	9.23	14.25	-0.01
run4	4/15/2009	10:44:15	11.74	-0.03	9.44	14	-0.01
run4	4/15/2009	10:44:30	11.74	-0.03	9.35	14	-0.01
run4	4/15/2009	10:44:45	11.76	-0.03	9.29	14.13	-0.01
run4	4/15/2009	10:45:00	11.74	-0.03	9.23	14.29	-0.01
run4	4/15/2009	10:45:15	11.74	-0.03	9.11	14.09	-0.01
run4	4/15/2009	10:45:30	11.76	-0.03	9.55	14.26	-0.01
run4	4/15/2009	10:45:45	11.8	-0.03	9.76	14.81	-0.01
run4	4/15/2009	10:46:00	11.81	-0.02	9.7	15.34	0
run4	4/15/2009	10:46:15	11.79	-0.03	9.16	15.6	-0.02
run4	4/15/2009	10:46:30	11.77	-0.03	9.34	15.72	-0.01
run4	4/15/2009	10:46:45	11.77	-0.03	9.56	15.51	-0.01
run4	4/15/2009	10:47:00	11.75	-0.03	9.52	15.1	0
run4	4/15/2009	10:47:15	11.77	-0.03	9.87	14.97	-0.01
run4	4/15/2009	10:47:30	11.8	-0.03	9.94	15.43	0
run4	4/15/2009	10:47:45	11.79	-0.03	9.46	15.9	-0.01
run4	4/15/2009	10:48:00	11.76	-0.03	9.51	15.75	-0.01
run4	4/15/2009	10:48:15	11.74	-0.03	9.69	15.16	-0.01
run4	4/15/2009	10:48:30	11.77	-0.03	9.58	14.63	-0.01
run4	4/15/2009	10:48:45	11.79	-0.02	9.98	14.93	-0.01
run4	4/15/2009	10:49:00	11.79	-0.02	10.14	15.27	-0.01
run4	4/15/2009	10:49:15	11.78	-0.03	9.67	15.2	-0.01
run4	4/15/2009	10:49:30	11.78	-0.03	9.55	15.17	-0.01
run4	4/15/2009	10:49:45	11.79	-0.03	9.69	15.31	0
run4	4/15/2009	10:50:00	11.79	-0.02	9.56	15.36	0
run4	4/15/2009	10:50:15	11.79	-0.03	10.07	15.36	-0.01
run4	4/15/2009	10:50:30	11.78	-0.03	9.83	15.5	-0.01
run4	4/15/2009	10:50:45	11.76	-0.03	9.45	15.47	-0.02
run4	4/15/2009	10:51:00	11.77	-0.03	9.01	15.31	-0.01
run4	4/15/2009	10:51:15	11.77	-0.03	9.38	15.3	-0.01
run4	4/15/2009	10:51:30	11.78	-0.03	9.36	15.09	-0.01
run4	4/15/2009	10:51:45	11.78	-0.03	9.27	14.82	-0.01
run4	4/15/2009	10:52:00	11.77	-0.03	9.32	14.57	-0.01
run4	4/15/2009	10:52:15	11.77	-0.03	9.46	14.49	-0.01
run4	4/15/2009	10:52:30	11.77	-0.03	9.44	14.4	-0.01
run4	4/15/2009	10:52:45	11.78	-0.03	9.34	14.46	-0.01

run4	4/15/2009	10:53:00	11.77	-0.03	9.56	14.29	-0.01
run4	4/15/2009	10:53:15	11.77	-0.03	9.47	13.97	-0.01
run4	4/15/2009	10:53:30	11.76	-0.03	9.13	13.6	-0.01
run4	4/15/2009	10:53:45	11.77	-0.03	9.19	13.34	-0.01
run4	4/15/2009	10:54:00	11.78	-0.03	9.23	13.15	-0.01
run4	4/15/2009	10:54:15	11.78	-0.03	9.17	13.01	-0.01
run4	4/15/2009	10:54:30	11.8	-0.03	9.15	12.99	0
run4	4/15/2009	10:54:45	11.8	-0.02	9.66	12.98	0
run4	4/15/2009	10:55:00	11.77	-0.02	9.88	12.92	-0.01
run4	4/15/2009	10:55:15	11.78	-0.03	9.8	12.78	-0.01
run4	4/15/2009	10:55:30	11.8	-0.03	9.64	12.92	0
run4	4/15/2009	10:55:45	11.79	-0.02	9.44	12.99	-0.01
run4	4/15/2009	10:56:00	11.8	-0.02	9.74	13.02	0
run4	4/15/2009	10:56:15	11.81	-0.03	9.8	13.31	0
run4	4/15/2009	10:56:30	11.83	-0.03	9.67	13.81	0
run4	4/15/2009	10:56:45	11.87	-0.03	9.58	14.08	0
run4	4/15/2009	10:57:00	11.88	-0.03	9.91	14.75	-0.01
run4	4/15/2009	10:57:15	11.86	-0.03	9.72	15.02	0
run4	4/15/2009	10:57:30	11.83	-0.03	9.94	15.24	0
run4	4/15/2009	10:57:45	11.83	-0.03	9.33	15.08	0
run4	4/15/2009	10:58:00	11.8	-0.03	8.77	14.62	0
run4	4/15/2009	10:58:15	11.81	-0.03	8.05	14.22	0
run4	4/15/2009	10:58:30	11.83	-0.03	8.84	14.16	0
run4	4/15/2009	10:58:45	11.82	-0.03	9.07	14.15	0
run4	4/15/2009	10:59:00	11.78	-0.03	8.94	13.68	-0.01
run4	4/15/2009	10:59:15	11.75	-0.03	8.81	12.92	-0.01
run4	4/15/2009	10:59:30	11.77	-0.03	8.75	12.3	-0.01
run4	4/15/2009	10:59:45	11.77	-0.03	9.52	12.1	-0.01
run4	4/15/2009	11:00:00	11.75	-0.03	9.32	11.84	-0.01
run4	4/15/2009	11:00:15	11.76	-0.03	8.95	11.78	-0.01
run4	4/15/2009	11:00:30	11.78	-0.03	8.53	11.93	-0.01
run4	4/15/2009	11:00:45	11.78	-0.03	8.47	12.2	-0.01
run4	4/15/2009	11:01:00	11.77	-0.03	8.67	12.46	-0.01
run4	4/15/2009	11:01:15	11.8	-0.02	8.58	12.73	0
run4	4/15/2009	11:01:30	11.81	-0.02	8.48	12.94	0
run4	4/15/2009	11:01:45	11.78	-0.03	8.15	12.71	-0.01
run4	4/15/2009	11:02:00	11.76	-0.03	8.14	12.27	0
run4	4/15/2009	11:02:15	11.75	-0.03	8.87	11.94	-0.01
run4	4/15/2009	11:02:30	11.76	-0.03	8.89	11.96	0
run4	4/15/2009	11:02:45	11.8	-0.02	8.6	12.39	-0.01
run4	4/15/2009	11:03:00	11.84	-0.03	8.51	13.01	-0.01
run4	4/15/2009	11:03:15	11.88	-0.03	8.35	13.93	0
run4	4/15/2009	11:03:30	11.88	-0.03	8.27	14.47	-0.01
run4	4/15/2009	11:03:45	11.88	-0.03	8.17	14.48	0
run4	4/15/2009	11:04:00	11.88	-0.03	8.59	14.53	0
run4	4/15/2009	11:04:15	11.87	-0.03	8.38	14.48	0
run4	4/15/2009	11:04:30	11.85	-0.03	8.61	14.57	-0.01
run4	4/15/2009	11:04:45	11.83	-0.03	9	14.57	0
run4	4/15/2009	11:05:00	11.81	-0.03	8.98	14.37	0
run4	4/15/2009	11:05:15	11.82	-0.03	8.74	14.26	0
run4	4/15/2009	11:05:30	11.83	-0.03	8.82	14.19	-0.01

run4	4/15/2009	11:05:45	11.83	-0.03	8.72	13.98	-0.01
run4	4/15/2009	11:06:00	11.85	-0.03	8.31	13.72	-0.01
run4	4/15/2009	11:06:15	11.87	-0.03	8.05	13.86	0
run4	4/15/2009	11:06:30	11.88	-0.03	7.68	13.87	0
run4	4/15/2009	11:06:45	11.88	-0.03	7.3	13.95	0
run4	4/15/2009	11:07:00	11.87	-0.03	8.53	14.06	0
run4	4/15/2009	11:07:15	11.86	-0.03	8.47	14.08	-0.01
run4	4/15/2009	11:07:30	11.85	-0.03	8.11	13.76	-0.01
run4	4/15/2009	11:07:45	11.87	-0.03	7.96	13.58	0
run4	4/15/2009	11:08:00	11.85	-0.03	7.8	13.58	-0.01
run4	4/15/2009	11:08:15	11.85	-0.03	7.83	13.66	-0.01
run4	4/15/2009	11:08:30	11.87	-0.03	7.74	13.91	-0.01
run4	4/15/2009	11:08:45	11.87	-0.03	7.76	13.96	0
run4	4/15/2009	11:09:00	11.87	-0.03	7.78	13.79	0
run4	4/15/2009	11:09:15	11.86	-0.03	7.72	13.6	0
run4	4/15/2009	11:09:30	11.86	-0.03	7.76	13.62	0
run4	4/15/2009	11:09:45	11.85	-0.03	7.94	13.59	0
run4	4/15/2009	11:10:00	11.83	-0.03	7.84	13.48	0
run4	4/15/2009	11:10:15	11.84	-0.03	7.78	13.49	0
run4	4/15/2009	11:10:30	11.84	-0.03	7.73	13.48	0
run4	4/15/2009	11:10:45	11.85	-0.03	7.71	13.31	0
run4	4/15/2009	11:11:00	11.84	-0.03	8.19	13.37	0
run4	4/15/2009	11:11:15	11.84	-0.02	8.05	13.21	0
run4	4/15/2009	11:11:30	11.84	-0.03	7.8	12.83	0
run4	4/15/2009	11:11:45	11.86	-0.03	8.24	12.71	0
run4	4/15/2009	11:12:00	11.87	-0.03	8.58	12.78	0
run4	4/15/2009	11:12:15	11.87	-0.03	8.11	12.93	0
run4	4/15/2009	11:12:30	11.87	-0.03	7.86	12.94	0
run4	4/15/2009	11:12:45	11.86	-0.03	8.42	12.71	0
run4	4/15/2009	11:13:00	11.87	-0.03	8.83	12.54	0
run4	4/15/2009	11:13:15	11.85	-0.03	8.23	12.62	0
run4	4/15/2009	11:13:30	11.83	-0.03	8.65	12.72	0
run4	4/15/2009	11:13:45	11.85	-0.03	8.51	12.97	0
run4	4/15/2009	11:14:00	11.87	-0.03	8.37	13.36	0
run4	4/15/2009	11:14:15	11.87	-0.03	8.84	13.58	0
run4	4/15/2009	11:14:30	11.87	-0.03	8.73	13.78	0
run4	4/15/2009	11:14:45	11.84	-0.03	9.03	13.61	0
run4	4/15/2009	11:15:00	11.83	-0.03	8.41	13.34	0.01
run4	4/15/2009	11:15:15	11.84	-0.03	8.19	13.34	0
run4	4/15/2009	11:15:30	11.84	-0.03	8.02	13.33	0
run4	4/15/2009	11:15:45	11.83	-0.03	7.85	13.3	0
run4	4/15/2009	11:16:00	11.83	-0.03	7.47	13.2	0
run4	4/15/2009	11:16:15	11.83	-0.03	7.14	13.09	0
run4	4/15/2009	11:16:30	11.84	-0.03	6.64	12.99	0
run4	4/15/2009	11:16:45	11.81	-0.03	6.76	12.71	0
run4	4/15/2009	11:17:00	11.79	-0.02	7.13	12.25	0
run4	4/15/2009	11:17:15	11.81	-0.03	7.09	12.12	0
run4	4/15/2009	11:17:30	11.85	-0.03	7.08	12.56	0
run4	4/15/2009	11:17:45	11.85	-0.03	7.59	13.01	0
run4	4/15/2009	11:18:00	11.81	-0.03	7.56	13	0
run4	4/15/2009	11:18:15	11.78	-0.02	7.56	12.38	0

run4	4/15/2009	11:18:30	11.76	-0.03	7.84	11.89	0	
run4	4/15/2009	11:18:45	11.79	-0.03	7.75	11.9	0	
run4	4/15/2009	11:19:00	11.82	-0.03	7.21	12.46	0	
run4	4/15/2009	11:19:15	11.82	-0.03	7.83	13.01	0	
run4	4/15/2009	11:19:30	11.81	-0.02	7.63	13.19	0	
run4	4/15/2009	11:19:45	11.82	-0.03	7.69	13.29	0	
run4	4/15/2009	11:20:00	11.83	-0.03	7.48	13.65	0	
run4	4/15/2009	11:20:15	11.83	-0.03	7.28	14.29	0	
run4	4/15/2009	11:20:30	11.82	-0.03	7.61	14.72	0	
run4	4/15/2009	11:20:45	11.79	-0.02	8.22	14.67	0	
run4	4/15/2009	11:21:00	11.76	-0.03	8	14.34	0	
run4	4/15/2009	11:21:15	11.73	-0.03	8.37	13.92	0	
run4	4/15/2009	11:21:30	11.72	-0.03	8.67	13.58	0	
run4	4/15/2009	11:21:45	11.72	-0.03	8.59	13.23	0	
run4	4/15/2009	11:22:00	11.71	-0.03	7.59	12.85	0	
run4	4/15/2009	11:22:15	11.68	-0.03	7.31	12.39	0	
run4	4/15/2009	11:22:30	11.64	-0.03	7.56	11.55	0.01	
run4	4/15/2009	11:22:45	11.56	-0.03	7.82	10.4	0	
run4	4/15/2009	11:23:00	11.57	-0.03	7.96	9.46	0	
run4	4/15/2009	11:23:15	11.66	-0.03	8.12	9.79	0	
run4	4/15/2009	11:23:30	11.75	-0.03	7.93	10.9	0	
run4	4/15/2009	11:23:45	11.77	-0.03	8.07	12.04	0	
run4	4/15/2009	11:24:00	11.77	-0.03	8.08	12.52	0	
run4	4/15/2009	11:24:15	11.8	-0.03	7.77	12.71	0	
run4	4/15/2009	11:24:30	11.84	-0.03	7.53	13.22	0	
run4	4/15/2009	11:24:45	11.85	-0.03	8.05	14.04	0	
run4	4/15/2009	11:25:00	11.81	-0.02	7.61	14.23	0	
run4	4/15/2009	11:25:15	11.75	-0.03	7.74	13.45	0	
run4	4/15/2009	11:25:30	11.72	-0.03	8.12	12.4	0	
run4	4/15/2009	11:25:45	11.77	-0.03	7.92	12.12	0	
averun4	4/15/2009	10:26:00	11.76	0.58	8.83	13.18	0.33	60
scg6	4/15/2009	11:26:15	11.85	-0.03	8.2	13.51	0	ALM05992
scg6	4/15/2009	11:26:30	11.86	-0.03	8.84	13.91	0	ALM05992
scg6	4/15/2009	11:26:45	11.91	-0.03	8.27	14.23	0	ALM05992
scg6	4/15/2009	11:27:00	13.8	-0.03	8.49	13.56	0.01	ALM05992
scg6	4/15/2009	11:27:15	10.82	-0.03	8.28	9.65	0	ALM05992
scg6	4/15/2009	11:27:30	4.34	-0.03	8.29	5	0.01	ALM05992
scg6	4/15/2009	11:27:45	1.79	-0.03	14.24	2.37	0	ALM05992
scg6	4/15/2009	11:28:00	1.01	-0.03	30.63	1.41	0	ALM05992
scg6	4/15/2009	11:28:15	0.71	-0.03	48.16	1.2	0	ALM05992
scg6	4/15/2009	11:28:30	0.58	-0.03	59.9	1.05	0	ALM05992
scg6	4/15/2009	11:28:45	0.52	-0.03	65.93	1.09	0	ALM05992
scg6	4/15/2009	11:29:00	0.49	-0.03	69.62	0.97	0	ALM05992
scg6	4/15/2009	11:29:15	0.47	-0.03	71.32	0.95	0	ALM05992
scg6	4/15/2009	11:29:30	0.43	-0.03	72.3	1	0	ALM05992
scg6	4/15/2009	11:29:45	0.39	-0.03	65.08	0.97	0	ALM05992
scg6	4/15/2009	11:30:00	0.36	-0.03	44.76	0.81	0	ALM05992
scg6	4/15/2009	11:30:15	0.32	-0.03	44.71	0.82	0	ALM05992
scg6	4/15/2009	11:30:30	0.28	-0.03	44.68	0.88	0	ALM05992
o2zero1	4/15/2009	11:30:30	0.28	-0.03	44.68	0.88	0	ALM05992
so2span1	4/15/2009	11:30:30	0.28	-0.03	44.68	0.88	0	ALM05992

scg9	4/15/2009	11:30:45	0.25	-0.02	44.89	0.8	0	ALM00690
scg9	4/15/2009	11:31:00	0.22	-0.03	44.67	0.83	0	ALM00690
scg9	4/15/2009	11:31:15	0.19	-0.03	44.93	0.8	0	ALM00690
scg9	4/15/2009	11:31:30	0.18	-0.03	45.35	0.8	0	ALM00690
scg9	4/15/2009	11:31:45	0.78	-0.03	45.51	0.77	0	ALM00690
scg9	4/15/2009	11:32:00	5.25	-0.03	45.02	0.62	0.01	ALM00690
scg9	4/15/2009	11:32:15	9	-0.03	42.7	0.51	0	ALM00690
scg9	4/15/2009	11:32:30	10.66	-0.03	34.69	0.31	0.01	ALM00690
scg9	4/15/2009	11:32:45	11.35	-0.03	23.46	0.24	0.01	ALM00690
scg9	4/15/2009	11:33:00	11.64	-0.02	14.92	0.27	0	ALM00690
scg9	4/15/2009	11:33:15	11.77	-0.03	9.54	0.28	0	ALM00690
scg9	4/15/2009	11:33:30	11.85	-0.03	6.9	0.15	0	ALM00690
scg9	4/15/2009	11:33:45	11.89	-0.03	5.48	0.26	0	ALM00690
scg9	4/15/2009	11:34:00	11.92	-0.02	4.41	0.21	0	ALM00690
scg9	4/15/2009	11:34:15	11.94	-0.03	3.68	0.2	0.01	ALM00690
scg9	4/15/2009	11:34:30	11.95	-0.03	3.55	0.2	0	ALM00690
scg9	4/15/2009	11:34:45	11.96	-0.03	2.77	0.14	0	ALM00690
scg9	4/15/2009	11:35:00	11.97	-0.03	2.39	0.21	0	ALM00690
scg9	4/15/2009	11:35:15	11.97	-0.03	0.06	0.23	0	ALM00690
scg9	4/15/2009	11:35:30	11.98	-0.03	0.07	0.31	0	ALM00690
scg9	4/15/2009	11:35:45	11.98	-0.03	0.02	0.23	0	ALM00690
scg9	4/15/2009	11:36:00	11.98	-0.03	0.02	0.26	0	ALM00690
so2zero1	4/15/2009	11:35:45	11.98	-0.03	0.02	0.23	0	ALM00690
o2span1	4/15/2009	11:33:45	11.89	-0.03	0.02	0.26	0	ALM00690
run5	4/15/2009	11:38:15	11.76	-0.03	0.72	11.72	0	
run5	4/15/2009	11:38:30	11.76	-0.03	0.71	11.62	0	
run5	4/15/2009	11:38:45	11.8	-0.03	0.27	12.03	0.01	
run5	4/15/2009	11:39:00	11.81	-0.02	0.08	12.63	0	
run5	4/15/2009	11:39:15	11.81	-0.03	0.66	12.89	0	
run5	4/15/2009	11:39:30	11.79	-0.03	1.2	13.03	0.01	
run5	4/15/2009	11:39:45	11.8	-0.02	1.36	13.2	0.01	
run5	4/15/2009	11:40:00	11.78	-0.03	1.57	13.33	0	
run5	4/15/2009	11:40:15	11.75	-0.03	1.77	13.25	0	
run5	4/15/2009	11:40:30	11.74	-0.03	3.92	12.94	0.01	
run5	4/15/2009	11:40:45	11.73	-0.03	12.11	12.56	0	
run5	4/15/2009	11:41:00	11.76	-0.03	13.93	12.08	0.01	
run5	4/15/2009	11:41:15	11.81	-0.03	12.45	12.15	0.01	
run5	4/15/2009	11:41:30	11.84	-0.03	7.47	12.43	0.01	
run5	4/15/2009	11:41:45	11.84	-0.03	8.62	13.02	0	
run5	4/15/2009	11:42:00	11.84	-0.03	10.3	13.04	0	
run5	4/15/2009	11:42:15	11.82	-0.03	10.3	12.87	0.01	
run5	4/15/2009	11:42:30	11.8	-0.03	10.3	12.53	0	
run5	4/15/2009	11:42:45	11.82	-0.03	10.3	12.73	0.01	
run5	4/15/2009	11:43:00	11.84	-0.03	10.3	13.43	0.01	
run5	4/15/2009	11:43:15	11.84	-0.03	10.3	13.89	0.01	
run5	4/15/2009	11:43:30	11.82	-0.02	10.3	14.07	0.01	
run5	4/15/2009	11:43:45	11.8	-0.02	10.3	13.74	0.01	
run5	4/15/2009	11:44:00	11.8	-0.03	10.3	13.34	0.01	
run5	4/15/2009	11:44:15	11.81	-0.02	10.3	13.12	0.01	
run5	4/15/2009	11:44:30	11.83	-0.03	10.3	13.38	0.01	
run5	4/15/2009	11:44:45	11.83	-0.03	10.3	13.49	0.01	

run5	4/15/2009	11:45:00	11.81	-0.02	10.3	13.43	0.01
run5	4/15/2009	11:45:15	11.79	-0.03	10.3	12.85	0.01
run5	4/15/2009	11:45:30	11.78	-0.03	10.3	12.53	0.01
run5	4/15/2009	11:45:45	11.77	-0.03	10.3	12.41	0.01
run5	4/15/2009	11:46:00	11.76	-0.03	10.3	12.48	0.01
run5	4/15/2009	11:46:15	11.76	-0.03	10.3	12.22	0.01
run5	4/15/2009	11:46:30	11.8	-0.03	10.3	12.03	0.01
run5	4/15/2009	11:46:45	11.83	-0.03	10.3	12.33	0.02
run5	4/15/2009	11:47:00	11.85	-0.03	10.3	12.53	0.01
run5	4/15/2009	11:47:15	11.87	-0.03	10.3	13.02	0.01
run5	4/15/2009	11:47:30	11.86	-0.02	10.3	13.37	0
run5	4/15/2009	11:47:45	11.85	-0.03	10.32	13.3	0.01
run5	4/15/2009	11:48:00	11.83	-0.02	10.32	13.24	0.01
run5	4/15/2009	11:48:15	11.81	-0.03	10.32	13.03	0.01
run5	4/15/2009	11:48:30	11.83	-0.03	10.32	13.09	0
run5	4/15/2009	11:48:45	11.84	-0.02	10.32	13.36	0.01
run5	4/15/2009	11:49:00	11.85	-0.03	10.3	13.63	0.01
run5	4/15/2009	11:49:15	11.84	-0.03	10.33	14.04	0.01
run5	4/15/2009	11:49:30	11.83	-0.03	10.33	14.07	0.01
run5	4/15/2009	11:49:45	11.81	-0.03	10.3	14.08	0.01
run5	4/15/2009	11:50:00	11.79	-0.02	10.33	14.06	0.01
run5	4/15/2009	11:50:15	11.78	-0.03	10.3	13.89	0.01
run5	4/15/2009	11:50:30	11.77	-0.03	10.32	13.83	0.01
run5	4/15/2009	11:50:45	11.76	-0.03	10.3	13.69	0.01
run5	4/15/2009	11:51:00	11.77	-0.03	10.21	13.58	0.01
run5	4/15/2009	11:51:15	11.79	-0.03	10.3	13.93	0.01
run5	4/15/2009	11:51:30	11.77	-0.03	10.27	14.44	0.01
run5	4/15/2009	11:51:45	11.75	-0.03	10.3	14.61	0.01
run5	4/15/2009	11:52:00	11.72	-0.02	10.31	14.21	0.01
run5	4/15/2009	11:52:15	11.7	-0.03	10.3	13.68	0.01
run5	4/15/2009	11:52:30	11.68	-0.03	10.11	13.27	0.01
run5	4/15/2009	11:52:45	11.68	-0.03	10.32	13.13	0.01
run5	4/15/2009	11:53:00	11.67	-0.03	10.3	12.82	0.01
run5	4/15/2009	11:53:15	11.69	-0.02	10.3	12.72	0.01
run5	4/15/2009	11:53:30	11.68	-0.03	10.33	12.89	0.01
run5	4/15/2009	11:53:45	11.67	-0.03	10.3	12.79	0.01
run5	4/15/2009	11:54:00	11.65	-0.02	10.32	12.62	0.01
run5	4/15/2009	11:54:15	11.63	-0.03	10.3	12.36	0.01
run5	4/15/2009	11:54:30	11.6	-0.02	10.3	12.13	0
run5	4/15/2009	11:54:45	11.6	-0.02	10.3	11.9	0
run5	4/15/2009	11:55:00	11.62	-0.03	10.3	11.99	0.01
run5	4/15/2009	11:55:15	11.61	-0.02	10.32	12.17	0.01
run5	4/15/2009	11:55:30	11.63	-0.03	10.3	12.29	0.02
run5	4/15/2009	11:55:45	11.62	-0.03	10.32	12.82	0.01
run5	4/15/2009	11:56:00	11.61	-0.02	10.3	12.79	0.01
run5	4/15/2009	11:56:15	11.64	-0.03	10.32	12.86	0.02
run5	4/15/2009	11:56:30	11.65	-0.02	10.32	13.24	0.01
run5	4/15/2009	11:56:45	11.62	-0.03	10.3	13.54	0.01
run5	4/15/2009	11:57:00	11.64	-0.03	10.3	13.64	0.01
run5	4/15/2009	11:57:15	11.65	-0.03	10.32	13.89	0.01
run5	4/15/2009	11:57:30	11.66	-0.03	10.3	13.92	0.01

run5	4/15/2009	11:57:45	11.66	-0.03	10.3	13.65	0.01
run5	4/15/2009	11:58:00	11.66	-0.03	10.32	13.37	0.01
run5	4/15/2009	11:58:15	11.68	-0.03	10.3	13.2	0.01
run5	4/15/2009	11:58:30	11.67	-0.03	10.3	13.24	0.01
run5	4/15/2009	11:58:45	11.67	-0.03	10.32	13.05	0.01
run5	4/15/2009	11:59:00	11.68	-0.03	10.3	13.2	0
run5	4/15/2009	11:59:15	11.67	-0.02	10.3	13.57	0
run5	4/15/2009	11:59:30	11.67	-0.03	10.3	13.68	0.01
run5	4/15/2009	11:59:45	11.67	-0.02	10.32	13.59	0.01
run5	4/15/2009	12:00:00	11.66	-0.03	10.33	13.47	0.01
run5	4/15/2009	12:00:15	11.65	-0.03	10.3	13.06	0.01
run5	4/15/2009	12:00:30	11.65	-0.03	10.32	12.89	0.01
run5	4/15/2009	12:00:45	11.66	-0.03	10.3	12.64	0.01
run5	4/15/2009	12:01:00	11.67	-0.03	10.3	12.27	0.01
run5	4/15/2009	12:01:15	11.69	-0.03	10.3	12.41	0
run5	4/15/2009	12:01:30	11.71	-0.03	10.3	12.75	0.01
run5	4/15/2009	12:01:45	11.73	-0.03	10.32	13.35	0.01
run5	4/15/2009	12:02:00	11.73	-0.02	10.32	13.75	0.01
run5	4/15/2009	12:02:15	11.73	-0.02	10.32	13.67	0.01
run5	4/15/2009	12:02:30	11.72	-0.03	10.32	13.53	0.01
run5	4/15/2009	12:02:45	11.7	-0.03	10.32	13.05	0.01
run5	4/15/2009	12:03:00	11.69	-0.03	10.3	12.67	0.01
run5	4/15/2009	12:03:15	11.68	-0.03	10.3	12.43	0.01
run5	4/15/2009	12:03:30	11.65	-0.03	10.3	11.95	0.01
run5	4/15/2009	12:03:45	11.66	-0.02	10.33	11.54	0.01
run5	4/15/2009	12:04:00	11.66	-0.02	10.34	11.64	0.01
run5	4/15/2009	12:04:15	11.66	-0.03	10.35	11.76	0.01
run5	4/15/2009	12:04:30	11.66	-0.03	10.34	11.77	0.02
run5	4/15/2009	12:04:45	11.7	-0.03	10.33	12.11	0
run5	4/15/2009	12:05:00	11.72	-0.02	10.33	12.84	0.01
run5	4/15/2009	12:05:15	11.72	-0.03	10.3	13.26	0.02
run5	4/15/2009	12:05:30	11.72	-0.03	10	13.13	0
run5	4/15/2009	12:05:45	11.73	-0.03	10.3	12.97	0.01
run5	4/15/2009	12:06:00	11.73	-0.03	10.3	12.84	0.01
run5	4/15/2009	12:06:15	11.72	-0.03	10.3	12.67	0.01
run5	4/15/2009	12:06:30	11.7	-0.03	10.33	12.52	0.01
run5	4/15/2009	12:06:45	11.69	-0.03	10.32	12.48	0.01
run5	4/15/2009	12:07:00	11.68	-0.03	10.3	12.43	0.01
run5	4/15/2009	12:07:15	11.68	-0.03	10.3	12.16	0.01
run5	4/15/2009	12:07:30	11.68	-0.02	10.31	11.92	0.01
run5	4/15/2009	12:07:45	11.68	-0.03	10.3	11.95	0.01
run5	4/15/2009	12:08:00	11.64	-0.03	10.31	11.71	0.03
run5	4/15/2009	12:08:15	11.61	-0.03	10.31	11.1	0.01
run5	4/15/2009	12:08:30	11.64	-0.02	10.31	10.65	0.01
run5	4/15/2009	12:08:45	11.69	-0.02	10.3	11.01	0
run5	4/15/2009	12:09:00	11.72	-0.03	10.33	11.82	0.01
run5	4/15/2009	12:09:15	11.74	-0.02	10.35	12.57	0.01
run5	4/15/2009	12:09:30	11.76	-0.03	10.3	13.01	0.01
run5	4/15/2009	12:09:45	11.75	-0.03	10.3	13.26	0.01
run5	4/15/2009	12:10:00	11.75	-0.03	10.35	13.08	0.01
run5	4/15/2009	12:10:15	11.74	-0.03	10.3	12.87	0.01

run5	4/15/2009	12:10:30	11.69	-0.02	10.36	12.55	0.01
run5	4/15/2009	12:10:45	11.67	-0.02	10.3	11.79	0.01
run5	4/15/2009	12:11:00	11.7	-0.03	10.37	11.58	0.01
run5	4/15/2009	12:11:15	11.7	-0.03	10.3	11.76	0.01
run5	4/15/2009	12:11:30	11.71	-0.03	10.34	11.9	0
run5	4/15/2009	12:11:45	11.73	-0.03	10.3	12.12	0.01
run5	4/15/2009	12:12:00	11.72	-0.03	10.33	12.34	0.01
run5	4/15/2009	12:12:15	11.7	-0.03	10.3	12.11	0.01
run5	4/15/2009	12:12:30	11.72	-0.03	10.31	11.93	0.01
run5	4/15/2009	12:12:45	11.72	-0.03	10.3	12.08	0.01
run5	4/15/2009	12:13:00	11.73	-0.03	10.22	12.03	0.01
run5	4/15/2009	12:13:15	11.75	-0.03	10.3	12.26	0.01
run5	4/15/2009	12:13:30	11.78	-0.03	10.25	12.84	0.01
run5	4/15/2009	12:13:45	11.78	-0.03	10.3	13.43	0.01
run5	4/15/2009	12:14:00	11.74	-0.03	10.29	13.75	0.01
run5	4/15/2009	12:14:15	11.72	-0.03	10.3	13.51	0.02
run5	4/15/2009	12:14:30	11.7	-0.03	10.29	13.11	0
run5	4/15/2009	12:14:45	11.7	-0.03	10.3	12.93	0.01
run5	4/15/2009	12:15:00	11.71	-0.03	10.3	13.11	0.01
run5	4/15/2009	12:15:15	11.73	-0.03	10.3	13.55	0.02
run5	4/15/2009	12:15:30	11.72	-0.02	10.3	13.79	0.01
run5	4/15/2009	12:15:45	11.68	-0.03	10.3	13.3	0.01
run5	4/15/2009	12:16:00	11.66	-0.03	10.32	12.8	0.01
run5	4/15/2009	12:16:15	11.62	-0.03	10.32	12.19	0.02
run5	4/15/2009	12:16:30	11.6	-0.02	10.32	11.7	0
run5	4/15/2009	12:16:45	11.6	-0.03	10.32	11.58	0
run5	4/15/2009	12:17:00	11.61	-0.02	10.32	11.58	0.01
run5	4/15/2009	12:17:15	11.61	-0.03	10.32	11.48	0.01
run5	4/15/2009	12:17:30	11.62	-0.02	10.3	11.54	0.01
run5	4/15/2009	12:17:45	11.63	-0.03	10.3	11.73	0.02
run5	4/15/2009	12:18:00	11.62	-0.03	10.33	12	0.01
run5	4/15/2009	12:18:15	11.62	-0.02	10.3	12.09	0.01
run5	4/15/2009	12:18:30	11.61	-0.03	10.33	12.09	0.01
run5	4/15/2009	12:18:45	11.61	-0.03	10.3	12.14	0.01
run5	4/15/2009	12:19:00	11.61	-0.02	10.32	12.34	0.01
run5	4/15/2009	12:19:15	11.61	-0.02	10.3	12.38	0.01
run5	4/15/2009	12:19:30	11.63	-0.03	10.33	12.51	0.01
run5	4/15/2009	12:19:45	11.62	-0.03	10.3	12.59	0.01
run5	4/15/2009	12:20:00	11.61	-0.02	10.34	12.26	0.01
run5	4/15/2009	12:20:15	11.61	-0.03	10.3	11.99	0.01
run5	4/15/2009	12:20:30	11.59	-0.03	10.32	11.92	0.01
run5	4/15/2009	12:20:45	11.57	-0.03	10.32	11.48	0.01
run5	4/15/2009	12:21:00	11.61	-0.02	10.3	11.52	0.01
run5	4/15/2009	12:21:15	11.64	-0.03	10.3	12.37	0.02
run5	4/15/2009	12:21:30	11.64	-0.03	10.24	13.03	0.01
run5	4/15/2009	12:21:45	11.64	-0.03	10.26	13.67	0.01
run5	4/15/2009	12:22:00	11.66	-0.03	10.32	14.29	0.01
run5	4/15/2009	12:22:15	11.62	-0.02	10.3	14.72	0.01
run5	4/15/2009	12:22:30	11.59	-0.02	10.3	14.33	0
run5	4/15/2009	12:22:45	11.59	-0.03	10.3	13.73	0
run5	4/15/2009	12:23:00	11.6	-0.02	10.3	13.41	0.01

run5	4/15/2009	12:23:15	11.6	-0.02	10.3	13.41	0
run5	4/15/2009	12:23:30	11.59	-0.02	10.3	13.54	0.01
run5	4/15/2009	12:23:45	11.59	-0.02	10.3	13.78	0
run5	4/15/2009	12:24:00	11.59	-0.02	10.3	13.71	0.01
run5	4/15/2009	12:24:15	11.58	-0.03	10.3	13.52	0
run5	4/15/2009	12:24:30	11.56	-0.03	10.3	13.2	0.01
run5	4/15/2009	12:24:45	11.56	-0.03	10.3	12.67	0.01
run5	4/15/2009	12:25:00	11.57	-0.03	10.3	12.25	0.01
run5	4/15/2009	12:25:15	11.57	-0.03	10.3	12.06	0.01
run5	4/15/2009	12:25:30	11.57	-0.03	10.32	11.98	0.01
run5	4/15/2009	12:25:45	11.59	-0.02	10.32	11.98	0
run5	4/15/2009	12:26:00	11.6	-0.02	10.32	12.05	0.01
run5	4/15/2009	12:26:15	11.59	-0.03	10.32	12.25	0.01
run5	4/15/2009	12:26:30	11.58	-0.02	10.32	12.25	0.01
run5	4/15/2009	12:26:45	11.61	-0.02	10.33	12.48	0.01
run5	4/15/2009	12:27:00	11.62	-0.03	10.3	12.75	0.02
run5	4/15/2009	12:27:15	11.63	-0.02	10.32	12.74	0.02
run5	4/15/2009	12:27:30	11.6	-0.02	10.3	12.46	0
run5	4/15/2009	12:27:45	11.57	-0.03	10.33	11.98	0.01
run5	4/15/2009	12:28:00	11.54	-0.03	10.3	11.55	0
run5	4/15/2009	12:28:15	11.53	-0.03	10.3	10.94	0.01
run5	4/15/2009	12:28:30	11.56	-0.03	10.32	10.85	0.01
run5	4/15/2009	12:28:45	11.59	-0.02	10.3	11.58	0.01
run5	4/15/2009	12:29:00	11.6	-0.03	10.32	12.08	0.01
run5	4/15/2009	12:29:15	11.61	-0.02	10.3	12.3	0
run5	4/15/2009	12:29:30	11.61	-0.02	10.35	12.58	0.01
run5	4/15/2009	12:29:45	11.59	-0.03	10.3	12.79	0
run5	4/15/2009	12:30:00	11.59	-0.02	10.34	12.99	0
run5	4/15/2009	12:30:15	11.58	-0.03	10.3	13.36	0
run5	4/15/2009	12:30:30	11.61	-0.02	10.3	13.79	0.01
run5	4/15/2009	12:30:45	11.64	-0.03	10.35	14.51	0.02
run5	4/15/2009	12:31:00	11.62	-0.03	10.3	14.9	0.01
run5	4/15/2009	12:31:15	11.6	-0.02	10.3	14.81	0.01
run5	4/15/2009	12:31:30	11.58	-0.03	10.3	14.55	0
run5	4/15/2009	12:31:45	11.58	-0.02	10.3	14.2	0.01
run5	4/15/2009	12:32:00	11.55	-0.02	10.3	13.8	0
run5	4/15/2009	12:32:15	11.51	-0.03	10.32	13.19	0.01
run5	4/15/2009	12:32:30	11.5	-0.03	10.32	12.86	0.01
run5	4/15/2009	12:32:45	11.5	-0.03	10.32	12.52	0.01
run5	4/15/2009	12:33:00	11.49	-0.03	10.32	12.2	0.01
run5	4/15/2009	12:33:15	11.51	-0.03	10.32	11.98	0.01
run5	4/15/2009	12:33:30	11.55	-0.03	10.32	12.06	0.01
run5	4/15/2009	12:33:45	11.55	-0.02	10.32	12.13	0.01
run5	4/15/2009	12:34:00	11.53	-0.03	10.3	11.92	0.01
run5	4/15/2009	12:34:15	11.51	-0.03	10.3	11.38	0.01
run5	4/15/2009	12:34:30	11.52	-0.02	10.3	11.04	0.01
run5	4/15/2009	12:34:45	11.56	-0.03	10.3	11.56	0.01
run5	4/15/2009	12:35:00	11.6	-0.02	10.33	12.28	0
run5	4/15/2009	12:35:15	11.63	-0.03	10.33	12.99	0.01
run5	4/15/2009	12:35:30	11.66	-0.03	10.32	13.32	0.01
run5	4/15/2009	12:35:45	11.66	-0.03	10.32	13.82	0.01

run5	4/15/2009	12:36:00	11.64	-0.03	10.3	13.76	0.01	
run5	4/15/2009	12:36:15	11.62	-0.02	10.3	13.29	0.01	
run5	4/15/2009	12:36:30	11.6	-0.02	10.32	13.02	0	
run5	4/15/2009	12:36:45	11.58	-0.03	10.3	12.55	0	
run5	4/15/2009	12:37:00	11.59	-0.02	10.32	12.28	0	
run5	4/15/2009	12:37:15	11.58	-0.03	10.3	12.12	0.01	
run5	4/15/2009	12:37:30	11.56	-0.03	10.23	11.85	0.01	
run5	4/15/2009	12:37:45	11.57	-0.03	10.33	11.84	0.01	
run5	4/15/2009	12:38:00	11.59	-0.02	10.3	12.12	0.01	
run5	4/15/2009	12:38:15	11.61	-0.02	10.32	12.19	0.01	
run5	4/15/2009	12:38:30	11.63	-0.03	10.32	12.31	0.02	
run5	4/15/2009	12:38:45	11.65	-0.03	10.32	12.61	0.01	
run5	4/15/2009	12:39:00	11.64	-0.03	10.3	12.83	0.01	
run5	4/15/2009	12:39:15	11.66	-0.03	10.3	13.06	0.01	
run5	4/15/2009	12:39:30	11.67	-0.03	10.32	13.32	0.01	
run5	4/15/2009	12:39:45	11.68	-0.03	10.32	13.62	0.01	
run5	4/15/2009	12:40:00	11.7	-0.03	10.32	13.69	0	
run5	4/15/2009	12:40:15	11.7	-0.03	10.32	13.58	0.01	
run5	4/15/2009	12:40:30	11.7	-0.03	10.32	13.58	0.01	
run5	4/15/2009	12:40:45	11.66	-0.02	10.3	13.45	0	
run5	4/15/2009	12:41:00	11.66	-0.03	10.3	13.45	0.01	
run5	4/15/2009	12:41:15	11.66	-0.03	10.3	13.38	0.01	
run5	4/15/2009	12:41:30	11.65	-0.03	10.32	13.38	0	
run5	4/15/2009	12:41:45	11.65	-0.02	10.3	13.35	0.01	
averun5	4/15/2009	11:42:00	11.67	-0.03	10.32	12.81	0.01	60
scg9	4/15/2009	12:44:00	19.71	-0.03	12.36	1.84	0.01	ALM00690
scg9	4/15/2009	12:44:15	19.44	-0.02	14.56	2.07	0.02	ALM00690
scg9	4/15/2009	12:44:30	16.67	-0.03	19	3.37	0.01	ALM00690
scg9	4/15/2009	12:44:45	14.09	-0.03	21.88	7.3	0.01	ALM00690
scg9	4/15/2009	12:45:00	13.03	-0.03	19.15	9.3	0	ALM00690
scg9	4/15/2009	12:45:15	12.57	-0.02	14.65	7.23	0.03	ALM00690
scg9	4/15/2009	12:45:30	12.2	-0.03	15.53	4.4	0	ALM00690
scg9	4/15/2009	12:45:45	11.99	-0.03	4.23	2.14	0	ALM00690
scg9	4/15/2009	12:46:00	11.88	-0.03	3.15	1.27	0	ALM00690
scg9	4/15/2009	12:46:15	11.82	-0.03	1	0.86	0	ALM00690
scg9	4/15/2009	12:46:30	11.79	-0.03	0.02	0.67	0	ALM00690
scg9	4/15/2009	12:46:45	11.77	-0.03	0.02	0.51	0	ALM00690
so2zero1	4/15/2009	12:46:30	11.79	-0.03	0.02	0.67	0	ALM00690
o2span1	4/15/2009	12:45:45	11.99	-0.03	0.03	2.14	0	ALM00690
scg6	4/15/2009	12:47:15	11.75	-0.03	0	0.42	0	ALM05992
scg9	4/15/2009	12:49:30	0.84	-0.03	0.03	0.78	0	ALM00690
scg9	4/15/2009	12:49:45	1.36	-0.02	0.02	0.97	0	ALM00690
scg9	4/15/2009	12:50:00	5.43	-0.02	-0.02	2.62	0.02	ALM00690
scg9	4/15/2009	12:50:15	6.77	-0.02	-0.02	6.14	0.02	ALM00690
scg9	4/15/2009	12:50:30	6.02	-0.02	-0.02	5.98	0.01	ALM00690
scg9	4/15/2009	12:50:45	4.58	-0.03	-0.02	3.32	0.01	ALM00690
scg9	4/15/2009	12:51:00	2.24	-0.02	-0.2	1.77	0.01	ALM00690
scg9	4/15/2009	12:51:15	1.97	-0.02	-0.2	0.96	0	ALM00690
scg9	4/15/2009	12:51:30	1.31	-0.03	-0.2	0.73	0	ALM00690
scg9	4/15/2009	12:51:45	1.47	-0.03	-0.2	0.57	0	ALM00690
scg9	4/15/2009	12:52:00	0.07	-0.03	-0.2	0.51	0	ALM00690

scg9	4/15/2009	12:52:15	0.04	-0.03	-0.2	0.42	0	ALM00690
scg9	4/15/2009	12:52:30	0.02	-0.02	-0.2	0.42	0.01	ALM00690
so2zero1	4/15/2009	12:50:30	0.02	-0.02	-0.02	5.98	0.01	ALM00690
o2zero1	4/15/2009	12:52:00	0.02	-0.03	0	0.51	0	ALM00690
scg6	4/15/2009	12:52:45	12.17	-0.03	4.83	0.42	0.01	ALM05992
scg6	4/15/2009	12:53:00	12.19	-0.03	7.87	0.42	0.01	ALM05992
scg6	4/15/2009	12:53:15	12.21	-0.03	20.37	0.42	0.01	ALM05992
scg6	4/15/2009	12:53:30	12.18	-0.03	29.35	0.42	0.01	ALM05992
scg6	4/15/2009	12:53:45	10.15	-0.03	43	0.42	0.01	ALM05992
scg6	4/15/2009	12:54:00	5.39	-0.03	53.76	0.49	0.02	ALM05992
scg6	4/15/2009	12:54:15	2.5	-0.03	53.12	0.55	0.01	ALM05992
scg6	4/15/2009	12:54:30	1.38	-0.03	45.61	0.68	0	ALM05992
scg6	4/15/2009	12:54:45	0.91	-0.03	46.87	0.71	0	ALM05992
scg6	4/15/2009	12:55:00	0.54	-0.03	47.12	0.78	0	ALM05992
scg6	4/15/2009	12:55:15	0.46	-0.03	47	0.81	0	ALM05992
scg6	4/15/2009	12:55:30	0.39	-0.03	46.71	0.74	0	ALM05992
scg6	4/15/2009	12:55:45	0.36	-0.03	44.34	0.81	0	ALM05992
scg6	4/15/2009	12:56:00	0.31	-0.03	44.34	0.81	0	ALM05992
so2span1	4/15/2009	12:55:45	0.36	-0.03	44.34	0.81	0	ALM05992
run6	4/15/2009	12:56:30	0.28	-0.03	45.88	0.81	0	
run6	4/15/2009	12:56:45	0.31	-0.03	40.66	0.86	0	
run6	4/15/2009	12:57:00	0.34	-0.03	40.66	0.81	0	
run6	4/15/2009	12:57:15	0.5	-0.03	39.7	0.84	0	
run6	4/15/2009	12:57:30	2.59	-0.03	35.7	1.82	0.01	
run6	4/15/2009	12:57:45	5.52	-0.03	32.98	5.09	0.02	
run6	4/15/2009	12:58:00	7.6	-0.03	30.12	8.17	0.01	
run6	4/15/2009	12:58:15	12.34	-0.02	29.59	10.6	0.02	
run6	4/15/2009	12:58:30	11.94	-0.03	28.52	11.99	0.01	
run6	4/15/2009	12:58:45	12.14	-0.03	28.11	13.12	0.01	
run6	4/15/2009	12:59:00	11.51	-0.03	27.66	13.94	0	
run6	4/15/2009	12:59:15	11.62	-0.03	21.47	14.7	0.01	
run6	4/15/2009	12:59:30	11.69	-0.03	16.41	15.18	0	
run6	4/15/2009	12:59:45	11.73	-0.03	11.32	15.57	0	
run6	4/15/2009	13:00:00	11.77	-0.03	10.01	15.66	0.01	
run6	4/15/2009	13:00:15	11.79	-0.02	10.01	15.67	0.01	
run6	4/15/2009	13:00:30	11.77	-0.03	10.01	15.44	0.01	
run6	4/15/2009	13:00:45	11.77	-0.03	10.1	15.01	0.01	
run6	4/15/2009	13:01:00	11.76	-0.03	10.01	14.54	0.01	
run6	4/15/2009	13:01:15	11.74	-0.03	10.01	13.97	0	
run6	4/15/2009	13:01:30	11.76	-0.03	10.11	13.82	0.01	
run6	4/15/2009	13:01:45	11.77	-0.03	10.01	14.12	0	
run6	4/15/2009	13:02:00	11.78	-0.03	10.2	14.09	0	
run6	4/15/2009	13:02:15	11.78	-0.02	10.01	13.86	0	
run6	4/15/2009	13:02:30	11.8	-0.02	10.21	13.95	0.01	
run6	4/15/2009	13:02:45	11.79	-0.02	10.01	13.92	0.01	
run6	4/15/2009	13:03:00	11.8	-0.03	10.01	13.71	0	
run6	4/15/2009	13:03:15	11.81	-0.02	10.12	13.54	0	
run6	4/15/2009	13:03:30	11.8	-0.02	10.01	13.4	0	
run6	4/15/2009	13:03:45	11.78	-0.03	10.21	13.19	0	
run6	4/15/2009	13:04:00	11.73	-0.02	10.01	12.41	0	
run6	4/15/2009	13:04:15	11.7	-0.03	10.12	11.45	0.01	

run6	4/15/2009	13:04:30	11.69	-0.03	10.01	11.31	0.01
run6	4/15/2009	13:04:45	11.71	-0.03	10.21	11.88	0.01
run6	4/15/2009	13:05:00	11.72	-0.03	10.22	12.49	0.01
run6	4/15/2009	13:05:15	11.73	-0.03	10.01	13.12	0.01
run6	4/15/2009	13:05:30	11.73	-0.03	10.23	13.43	0
run6	4/15/2009	13:05:45	11.69	-0.03	10.01	13.19	0.01
run6	4/15/2009	13:06:00	11.7	-0.02	10.21	12.52	0
run6	4/15/2009	13:06:15	11.75	-0.02	10.01	12.47	0.01
run6	4/15/2009	13:06:30	11.78	-0.03	10.22	12.74	0
run6	4/15/2009	13:06:45	11.78	-0.02	10.21	12.97	0.01
run6	4/15/2009	13:07:00	11.8	-0.03	10.21	13.33	0
run6	4/15/2009	13:07:15	11.81	-0.02	10.2	13.73	0.01
run6	4/15/2009	13:07:30	11.82	-0.03	10.24	13.8	0.01
run6	4/15/2009	13:07:45	11.83	-0.03	10.23	13.89	0.01
run6	4/15/2009	13:08:00	11.84	-0.03	10.25	13.89	0
run6	4/15/2009	13:08:15	11.84	-0.03	10.22	13.85	0.01
run6	4/15/2009	13:08:30	11.85	-0.03	10.01	13.88	0.01
run6	4/15/2009	13:08:45	11.84	-0.03	10.24	14.07	0.01
run6	4/15/2009	13:09:00	11.85	-0.02	10.2	14.41	0
run6	4/15/2009	13:09:15	11.84	-0.03	10.26	14.26	0.01
run6	4/15/2009	13:09:30	11.85	-0.03	10.2	13.88	0
run6	4/15/2009	13:09:45	11.85	-0.03	10.24	13.8	0.01
run6	4/15/2009	13:10:00	11.83	-0.03	10.21	13.42	0
run6	4/15/2009	13:10:15	11.82	-0.03	10.27	12.88	0.01
run6	4/15/2009	13:10:30	11.81	-0.02	10.22	12.27	0
run6	4/15/2009	13:10:45	11.79	-0.03	10.21	11.62	0.01
run6	4/15/2009	13:11:00	11.79	-0.02	10.23	11.15	0.01
run6	4/15/2009	13:11:15	11.81	-0.03	10.25	11.1	0.01
run6	4/15/2009	13:11:30	11.81	-0.03	10.23	11.21	0.01
run6	4/15/2009	13:11:45	11.84	-0.02	10.23	11.63	0
run6	4/15/2009	13:12:00	11.83	-0.03	10.23	12.39	0.01
run6	4/15/2009	13:12:15	11.84	-0.03	10.23	13.01	0
run6	4/15/2009	13:12:30	11.87	-0.02	10.23	13.53	0
run6	4/15/2009	13:12:45	11.87	-0.03	10.23	13.94	0.01
run6	4/15/2009	13:13:00	11.85	-0.03	10.23	13.89	0.01
run6	4/15/2009	13:13:15	11.82	-0.03	10.23	13.52	0.01
run6	4/15/2009	13:13:30	11.8	-0.03	10.23	13.07	0
run6	4/15/2009	13:13:45	11.8	-0.03	10.23	13.13	0
run6	4/15/2009	13:14:00	11.8	-0.03	10.23	13.33	0
run6	4/15/2009	13:14:15	11.79	-0.02	10.23	13.2	0
run6	4/15/2009	13:14:30	11.75	-0.03	10.23	12.87	0
run6	4/15/2009	13:14:45	11.69	-0.03	10.23	12.06	0
run6	4/15/2009	13:15:00	11.71	-0.02	10.23	11.73	0
run6	4/15/2009	13:15:15	11.77	-0.03	10.23	12.54	0.01
run6	4/15/2009	13:15:30	11.8	-0.02	10.23	13.73	0
run6	4/15/2009	13:15:45	11.79	-0.03	10.23	14.13	0.01
run6	4/15/2009	13:16:00	11.77	-0.03	10.23	13.84	0
run6	4/15/2009	13:16:15	11.75	-0.02	10.23	13.07	0
run6	4/15/2009	13:16:30	11.76	-0.03	10.23	12.48	0.01
run6	4/15/2009	13:16:45	11.74	-0.03	10.23	11.95	0.01
run6	4/15/2009	13:17:00	11.72	-0.03	10.23	11.7	0

run6	4/15/2009	13:17:15	11.73	-0.03	10.25	11.58	0
run6	4/15/2009	13:17:30	11.71	-0.02	10.25	11.41	0
run6	4/15/2009	13:17:45	11.68	-0.03	10.25	10.8	0.01
run6	4/15/2009	13:18:00	11.68	-0.03	10.25	10.5	0.01
run6	4/15/2009	13:18:15	11.67	-0.03	10.25	10.44	0.01
run6	4/15/2009	13:18:30	11.65	-0.03	10.25	10.27	0.01
run6	4/15/2009	13:18:45	11.62	-0.02	10.25	9.95	0.01
run6	4/15/2009	13:19:00	11.64	-0.02	10.25	10.18	0
run6	4/15/2009	13:19:15	11.69	-0.03	10.25	10.76	0.01
run6	4/15/2009	13:19:30	11.7	-0.02	10.25	11.21	0
run6	4/15/2009	13:19:45	11.68	-0.04	10.25	11.19	0.01
run6	4/15/2009	13:20:00	11.68	-0.02	10.25	10.94	0
run6	4/15/2009	13:20:15	11.71	-0.02	10.25	11.34	0.01
run6	4/15/2009	13:20:30	11.76	-0.03	10.25	12.29	0
run6	4/15/2009	13:20:45	11.79	-0.02	10.25	13.14	0
run6	4/15/2009	13:21:00	11.76	-0.03	10.25	13.08	0.01
run6	4/15/2009	13:21:15	11.75	-0.03	10.22	12.64	0.01
run6	4/15/2009	13:21:30	11.75	-0.03	10.22	12.51	0
run6	4/15/2009	13:21:45	11.74	-0.03	10.22	12.48	0
run6	4/15/2009	13:22:00	11.76	-0.02	10.22	12.5	0.01
run6	4/15/2009	13:22:15	11.77	-0.03	10.22	12.68	0
run6	4/15/2009	13:22:30	11.74	-0.03	10.22	12.66	0.01
run6	4/15/2009	13:22:45	11.73	-0.02	10.22	12.29	0
run6	4/15/2009	13:23:00	11.74	-0.03	10.22	12.15	0
run6	4/15/2009	13:23:15	11.69	-0.02	10.22	11.74	0
run6	4/15/2009	13:23:30	11.66	-0.03	10.22	11.2	0
run6	4/15/2009	13:23:45	11.61	-0.03	10.22	10.43	0.01
run6	4/15/2009	13:24:00	11.62	-0.02	10.22	9.91	0.01
run6	4/15/2009	13:24:15	11.68	-0.03	10.22	10.79	0.01
run6	4/15/2009	13:24:30	11.72	-0.03	10.22	12.35	0.01
run6	4/15/2009	13:24:45	11.74	-0.03	10.22	13.27	0
run6	4/15/2009	13:25:00	11.78	-0.03	10.22	13.87	0.01
run6	4/15/2009	13:25:15	11.82	-0.02	10.22	14.74	0.01
run6	4/15/2009	13:25:30	11.8	-0.03	10.22	15.21	0
run6	4/15/2009	13:25:45	11.79	-0.03	10.22	15.09	0
run6	4/15/2009	13:26:00	11.79	-0.02	10.22	15.15	0
run6	4/15/2009	13:26:15	11.78	-0.04	10.22	14.98	0
run6	4/15/2009	13:26:30	11.76	-0.02	10.22	14.38	0
run6	4/15/2009	13:26:45	11.76	-0.03	10.22	13.95	0.01
run6	4/15/2009	13:27:00	11.76	-0.04	10.22	13.82	0
run6	4/15/2009	13:27:15	11.75	-0.03	10.22	13.8	0
run6	4/15/2009	13:27:30	11.7	-0.03	10.22	13.62	0.01
run6	4/15/2009	13:27:45	11.63	-0.02	10.22	12.91	0.02
run6	4/15/2009	13:28:00	11.6	-0.02	10.22	12.08	0
run6	4/15/2009	13:28:15	11.63	-0.03	10.22	11.87	0.02
run6	4/15/2009	13:28:30	11.65	-0.03	10.22	12.27	0.01
run6	4/15/2009	13:28:45	11.67	-0.03	10.22	12.67	0.01
run6	4/15/2009	13:29:00	11.68	-0.03	10.22	12.93	0.01
run6	4/15/2009	13:29:15	11.65	-0.03	10.22	12.64	0.01
run6	4/15/2009	13:29:30	11.6	-0.02	10.22	11.76	0
run6	4/15/2009	13:29:45	11.6	-0.02	10.22	11.19	0

run6	4/15/2009	13:30:00	11.61	-0.03	10.25	11.15	0.01
run6	4/15/2009	13:30:15	11.68	-0.03	10.25	11.65	0
run6	4/15/2009	13:30:30	11.75	-0.02	10.25	12.73	0
run6	4/15/2009	13:30:45	11.81	-0.03	10.25	13.98	0
run6	4/15/2009	13:31:00	11.82	-0.03	10.25	14.98	0.01
run6	4/15/2009	13:31:15	11.81	-0.03	10.25	14.97	0
run6	4/15/2009	13:31:30	11.81	-0.03	10.25	14.6	0.01
run6	4/15/2009	13:31:45	11.79	-0.01	10.25	14.07	0
run6	4/15/2009	13:32:00	11.79	-0.02	10.25	13.32	0
run6	4/15/2009	13:32:15	11.81	-0.02	10.25	13.04	0.01
run6	4/15/2009	13:32:30	11.83	-0.03	10.25	13.09	0.01
run6	4/15/2009	13:32:45	11.84	-0.03	10.25	13.14	0.01
run6	4/15/2009	13:33:00	11.86	-0.02	10.25	13.58	0.01
run6	4/15/2009	13:33:15	11.87	-0.02	10.25	14.03	0
run6	4/15/2009	13:33:30	11.84	-0.02	10.25	13.9	0.01
run6	4/15/2009	13:33:45	11.81	-0.02	10.25	13.59	0.01
run6	4/15/2009	13:34:00	11.8	-0.03	10.25	13.38	0
run6	4/15/2009	13:34:15	11.76	-0.03	10.25	13.09	0
run6	4/15/2009	13:34:30	11.73	-0.03	10.25	12.42	0
run6	4/15/2009	13:34:45	11.76	-0.03	10.25	12.14	0
run6	4/15/2009	13:35:00	11.81	-0.02	10.25	12.65	0.01
run6	4/15/2009	13:35:15	11.82	-0.03	10.25	13.27	0.01
run6	4/15/2009	13:35:30	11.83	-0.03	10.25	13.99	0.01
run6	4/15/2009	13:35:45	11.83	-0.02	10.25	14.43	0.01
run6	4/15/2009	13:36:00	11.82	-0.03	10.25	14.7	0.01
run6	4/15/2009	13:36:15	11.8	-0.02	10.25	14.97	0.01
run6	4/15/2009	13:36:30	11.78	-0.02	10.25	14.65	0
run6	4/15/2009	13:36:45	11.82	-0.03	10.25	14.63	0.01
run6	4/15/2009	13:37:00	11.84	-0.02	10.25	14.96	0.01
run6	4/15/2009	13:37:15	11.85	-0.03	10.23	15.29	0
run6	4/15/2009	13:37:30	11.81	-0.02	10.23	15.51	0.01
run6	4/15/2009	13:37:45	11.77	-0.03	10.23	15.22	0
run6	4/15/2009	13:38:00	11.76	-0.03	10.23	15.05	0
run6	4/15/2009	13:38:15	11.76	-0.03	10.23	14.92	0.01
run6	4/15/2009	13:38:30	11.75	-0.03	10.23	14.68	0
run6	4/15/2009	13:38:45	11.75	-0.03	10.23	14.53	0
run6	4/15/2009	13:39:00	11.75	-0.03	10.23	14.54	0
run6	4/15/2009	13:39:15	11.73	-0.03	10.23	14.33	0
run6	4/15/2009	13:39:30	11.71	-0.02	10.23	14.09	0
run6	4/15/2009	13:39:45	11.69	-0.03	10.23	13.94	0.01
run6	4/15/2009	13:40:00	11.67	-0.03	10.23	13.92	0
run6	4/15/2009	13:40:15	11.66	-0.03	10.23	14.09	0
run6	4/15/2009	13:40:30	11.66	-0.03	10.23	14.5	0.01
run6	4/15/2009	13:40:45	11.67	-0.03	10.23	14.87	0
run6	4/15/2009	13:41:00	11.64	-0.03	10.23	14.64	0.01
run6	4/15/2009	13:41:15	11.65	-0.03	10.23	14.27	0.01
run6	4/15/2009	13:41:30	11.65	-0.02	10.23	14.16	0.01
run6	4/15/2009	13:41:45	11.64	-0.03	10.23	13.98	0.01
run6	4/15/2009	13:42:00	11.63	-0.03	10.23	13.59	0.01
run6	4/15/2009	13:42:15	11.63	-0.03	10.23	13.38	0.02
run6	4/15/2009	13:42:30	11.63	-0.03	10.23	13.5	0.02

run6	4/15/2009	13:42:45	11.63	-0.03	10.23	13.94	0.01
run6	4/15/2009	13:43:00	11.61	-0.02	10.23	14.18	0.01
run6	4/15/2009	13:43:15	11.58	-0.03	10.23	13.99	0
run6	4/15/2009	13:43:30	11.57	-0.03	10.23	13.62	0
run6	4/15/2009	13:43:45	11.55	-0.03	10.23	13.47	0.01
run6	4/15/2009	13:44:00	11.46	-0.02	10.23	12.6	0
run6	4/15/2009	13:44:15	11.42	-0.03	10.23	11.53	0
run6	4/15/2009	13:44:30	11.44	-0.02	10.23	11.24	0
run6	4/15/2009	13:44:45	11.45	-0.02	10.23	11.45	0
run6	4/15/2009	13:45:00	11.45	-0.03	10.23	11.44	0
run6	4/15/2009	13:45:15	11.45	-0.02	10.23	11.18	0
run6	4/15/2009	13:45:30	11.45	-0.02	10.23	10.79	0
run6	4/15/2009	13:45:45	11.46	-0.03	10.23	10.52	0.01
run6	4/15/2009	13:46:00	11.48	-0.02	10.23	10.49	0.01
run6	4/15/2009	13:46:15	11.52	-0.03	10.23	10.63	0.01
run6	4/15/2009	13:46:30	11.55	-0.03	10.23	10.75	0
run6	4/15/2009	13:46:45	11.58	-0.03	10.23	11.15	0
run6	4/15/2009	13:47:00	11.61	-0.02	10.23	11.6	0
run6	4/15/2009	13:47:15	11.62	-0.02	10.23	11.88	0.01
run6	4/15/2009	13:47:30	11.6	-0.02	10.23	11.61	0
run6	4/15/2009	13:47:45	11.6	-0.02	10.23	11.23	0
run6	4/15/2009	13:48:00	11.61	-0.02	10.23	11.27	0
run6	4/15/2009	13:48:15	11.6	-0.02	10.23	11.23	0.01
run6	4/15/2009	13:48:30	11.63	-0.02	10.23	11.11	0.01
run6	4/15/2009	13:48:45	11.7	-0.02	10.23	11.96	0.01
run6	4/15/2009	13:49:00	11.73	-0.04	10.23	13.02	0.01
run6	4/15/2009	13:49:15	11.76	-0.02	10.23	13.61	0.01
run6	4/15/2009	13:49:30	11.76	-0.03	10.23	13.93	0.01
run6	4/15/2009	13:49:45	11.72	-0.03	10.23	13.53	0
run6	4/15/2009	13:50:00	11.71	-0.02	10.23	12.92	0
run6	4/15/2009	13:50:15	11.73	-0.03	10.23	12.68	0.01
run6	4/15/2009	13:50:30	11.73	-0.02	10.23	12.62	0
run6	4/15/2009	13:50:45	11.71	-0.03	10.23	12.28	0
run6	4/15/2009	13:51:00	11.71	-0.03	10.23	12	0
run6	4/15/2009	13:51:15	11.73	-0.03	10.23	11.87	0.01
run6	4/15/2009	13:51:30	11.79	-0.02	10.23	12.17	0
run6	4/15/2009	13:51:45	11.82	-0.03	10.23	12.9	0.01
run6	4/15/2009	13:52:00	11.82	-0.02	10.23	13.41	0
run6	4/15/2009	13:52:15	11.8	-0.03	10.23	13.22	0
run6	4/15/2009	13:52:30	11.77	-0.02	10.23	12.5	0.01
run6	4/15/2009	13:52:45	11.77	-0.03	10.23	11.77	0
run6	4/15/2009	13:53:00	11.78	-0.03	10.23	11.71	0
run6	4/15/2009	13:53:15	11.77	-0.03	10.23	11.93	0
run6	4/15/2009	13:53:30	11.72	-0.03	10.23	11.82	0
run6	4/15/2009	13:53:45	11.7	-0.03	10.23	11.37	0
run6	4/15/2009	13:54:00	11.67	-0.03	10.23	10.68	0
run6	4/15/2009	13:54:15	11.67	-0.03	10.23	10.23	0.01
run6	4/15/2009	13:54:30	11.68	-0.02	10.23	10.29	0
run6	4/15/2009	13:54:45	11.71	-0.03	10.23	10.55	0.01
run6	4/15/2009	13:55:00	11.74	-0.03	10.23	10.97	0
run6	4/15/2009	13:55:15	11.75	-0.03	10.23	11.08	0.01

run6	4/15/2009	13:55:30	11.76	-0.03	10.23	11.13	0.01	
run6	4/15/2009	13:55:45	11.78	-0.02	10.23	11.56	0	
run6	4/15/2009	13:56:00	11.79	-0.03	10.23	12.09	0	
run6	4/15/2009	13:56:15	11.73	-0.03	10.23	12.11	0	
run6	4/15/2009	13:56:30	11.72	-0.03	10.23	11.68	0	
run6	4/15/2009	13:56:45	11.72	-0.03	10.23	11.48	0.01	
run6	4/15/2009	13:57:00	11.72	-0.02	10.23	11.59	0	
run6	4/15/2009	13:57:15	11.78	-0.03	10.23	12.37	0	
run6	4/15/2009	13:57:30	11.82	-0.03	10.23	13.52	0.01	
run6	4/15/2009	13:57:45	11.81	-0.02	10.23	14.07	0.01	
run6	4/15/2009	13:58:00	11.82	-0.03	10.23	14.19	0.01	
run6	4/15/2009	13:58:15	11.82	-0.02	10.23	14.39	0.01	
run6	4/15/2009	13:58:30	11.81	-0.03	10.22	14.57	0.01	
run6	4/15/2009	13:58:45	11.79	-0.02	10.24	14.52	0	
run6	4/15/2009	13:59:00	11.79	-0.02	10.23	14.33	0	
run6	4/15/2009	13:59:15	11.8	-0.02	10.22	14.55	0	
run6	4/15/2009	13:59:30	11.8	-0.02	10.23	15	0	
run6	4/15/2009	13:59:45	11.8	-0.03	10.21	15.36	0	
averun6	4/15/2009	13:00:00	11.73	-0.03	10.23	12.92	0.01	60
scg9	4/15/2009	14:00:00	11.81	-0.03	13.02	15.76	0	ALM00690
scg9	4/15/2009	14:00:15	11.8	-0.03	13.12	15.82	0	ALM00690
scg9	4/15/2009	14:00:30	11.78	-0.02	13.28	15.48	0	ALM00690
scg9	4/15/2009	14:00:45	11.31	-0.03	12.88	14.86	0.01	ALM00690
scg9	4/15/2009	14:01:00	8.21	-0.03	13.4	12.75	0.01	ALM00690
scg9	4/15/2009	14:01:15	8.48	-0.02	13.94	8.89	0	ALM00690
scg9	4/15/2009	14:01:30	10.38	-0.03	24.03	5.13	0	ALM00690
scg9	4/15/2009	14:01:45	11.27	-0.03	33.17	3	0	ALM00690
scg9	4/15/2009	14:02:00	11.73	-0.03	12.62	1.71	0	ALM00690
scg9	4/15/2009	14:02:15	11.92	-0.03	5.31	1.15	0.01	ALM00690
scg9	4/15/2009	14:02:30	11.99	-0.02	1.61	0.81	0.01	ALM00690
scg9	4/15/2009	14:02:45	12.03	-0.03	0.02	0.65	0	ALM00690
scg9	4/15/2009	14:03:00	12.04	-0.03	0.02	0.59	0	ALM00690
so2zero1	4/15/2009	14:03:00	12.04	-0.03	0.02	0.59	0	ALM00690
o2span1	4/15/2009	14:02:30	11.99	-0.02	0.02	0.81	0.01	ALM00690
scg6	4/15/2009	14:03:15	12.05	-0.02	0.04	0.51	0.01	ALM05992
scg6	4/15/2009	14:03:30	12.06	-0.03	0.04	0.51	0	ALM05992
scg6	4/15/2009	14:03:45	12.07	-0.02	0.04	0.51	0	ALM05992
scg6	4/15/2009	14:04:00	12.06	-0.03	0	0.49	0.01	ALM05992
scg6	4/15/2009	14:04:15	10.86	-0.03	0	0.42	0	ALM05992
scg6	4/15/2009	14:04:30	6.12	-0.02	5.9	0.5	0	ALM05992
scg6	4/15/2009	14:04:45	2.79	-0.03	7.31	0.57	0	ALM05992
scg6	4/15/2009	14:05:00	1.54	-0.02	9.21	0.72	0	ALM05992
scg6	4/15/2009	14:05:15	1.06	-0.03	15.78	0.75	0	ALM05992
scg6	4/15/2009	14:05:30	0.81	-0.03	25.87	0.79	0	ALM05992
scg6	4/15/2009	14:05:45	0.67	-0.02	37.89	0.8	0	ALM05992
scg6	4/15/2009	14:06:00	0.58	-0.03	42.36	0.8	0	ALM05992
scg6	4/15/2009	14:06:15	0.33	-0.02	44.37	0.81	0	ALM05992
o2zero1	4/15/2009	14:06:15	0.33	-0.02	44.37	0.81	0	ALM05992
so2span1	4/15/2009	14:06:00	0.58	-0.03	44.37	0.8	0	ALM05992
run7	4/15/2009	14:06:30	0.5	-0.03	42.1	0.8	0	
run7	4/15/2009	14:06:45	0.47	-0.03	40.69	0.8	0	

run7	4/15/2009	14:07:00	0.55	-0.02	38.12	0.9	0
run7	4/15/2009	14:07:15	0.59	-0.04	26.37	0.85	0
run7	4/15/2009	14:07:30	1.54	-0.03	21	1.18	0
run7	4/15/2009	14:07:45	5.14	-0.03	19.87	3.2	0
run7	4/15/2009	14:08:00	8.34	-0.03	15.53	7.26	0
run7	4/15/2009	14:08:15	10.13	-0.02	13.19	10.6	0.01
run7	4/15/2009	14:08:30	10.93	-0.03	12.52	12.29	0
run7	4/15/2009	14:08:45	11.3	-0.04	11.99	12.66	0.01
run7	4/15/2009	14:09:00	11.47	-0.02	12	13.06	0
run7	4/15/2009	14:09:15	11.56	-0.03	11.95	13.28	0
run7	4/15/2009	14:09:30	11.64	-0.02	11.98	13.51	0.01
run7	4/15/2009	14:09:45	11.69	-0.03	11.93	13.47	0
run7	4/15/2009	14:10:00	11.72	-0.03	11.95	13.88	0
run7	4/15/2009	14:10:15	11.72	-0.02	11.97	13.97	0
run7	4/15/2009	14:10:30	11.73	-0.03	11.98	13.74	0
run7	4/15/2009	14:10:45	11.73	-0.03	11.94	13.53	0
run7	4/15/2009	14:11:00	11.74	-0.02	11.97	13.54	0
run7	4/15/2009	14:11:15	11.75	-0.03	11.97	13.88	0
run7	4/15/2009	14:11:30	11.76	-0.02	11.97	14.26	0
run7	4/15/2009	14:11:45	11.76	-0.03	11.97	14.48	0
run7	4/15/2009	14:12:00	11.76	-0.03	11.97	14.2	0
run7	4/15/2009	14:12:15	11.76	-0.03	11.97	13.77	0
run7	4/15/2009	14:12:30	11.75	-0.03	11.97	13.23	0.01
run7	4/15/2009	14:12:45	11.76	-0.02	11.97	12.87	0
run7	4/15/2009	14:13:00	11.76	-0.03	11.97	12.68	0
run7	4/15/2009	14:13:15	11.77	-0.03	11.97	12.81	0
run7	4/15/2009	14:13:30	11.78	-0.02	11.97	12.89	0
run7	4/15/2009	14:13:45	11.78	-0.02	11.97	12.89	0
run7	4/15/2009	14:14:00	11.79	-0.02	11.97	12.92	0
run7	4/15/2009	14:14:15	11.81	-0.02	11.98	13.05	0
run7	4/15/2009	14:14:30	11.82	-0.03	11.97	13.34	0.01
run7	4/15/2009	14:14:45	11.83	-0.02	11.97	13.59	0.01
run7	4/15/2009	14:15:00	11.82	-0.03	11.97	13.35	0.01
run7	4/15/2009	14:15:15	11.82	-0.02	11.95	13.19	0.01
run7	4/15/2009	14:15:30	11.82	-0.02	11.97	13.43	0.01
run7	4/15/2009	14:15:45	11.82	-0.03	11.97	13.65	0.01
run7	4/15/2009	14:16:00	11.82	-0.02	11.97	13.7	0.01
run7	4/15/2009	14:16:15	11.8	-0.03	11.97	13.69	0.01
run7	4/15/2009	14:16:30	11.79	-0.03	11.98	13.43	0
run7	4/15/2009	14:16:45	11.79	-0.02	11.97	13.13	0
run7	4/15/2009	14:17:00	11.79	-0.03	11.97	12.91	0
run7	4/15/2009	14:17:15	11.76	-0.03	11.99	12.44	0.01
run7	4/15/2009	14:17:30	11.73	-0.03	11.97	11.94	0
run7	4/15/2009	14:17:45	11.76	-0.03	11.97	11.77	0.01
run7	4/15/2009	14:18:00	11.79	-0.02	11.97	11.8	0
run7	4/15/2009	14:18:15	11.81	-0.03	11.95	11.94	0
run7	4/15/2009	14:18:30	11.82	-0.02	11.97	11.95	0.01
run7	4/15/2009	14:18:45	11.84	-0.03	11.97	11.81	0.01
run7	4/15/2009	14:19:00	11.87	-0.03	11.97	12.08	0
run7	4/15/2009	14:19:15	11.87	-0.02	11.97	12.5	0
run7	4/15/2009	14:19:30	11.89	-0.03	11.99	12.77	0

run7	4/15/2009	14:19:45	11.91	-0.03	11.97	13.24	0
run7	4/15/2009	14:20:00	11.91	-0.02	11.97	13.4	0.01
run7	4/15/2009	14:20:15	11.9	-0.03	11.97	12.99	0
run7	4/15/2009	14:20:30	11.88	-0.02	11.98	12.59	0.01
run7	4/15/2009	14:20:45	11.86	-0.03	11.97	12.2	0
run7	4/15/2009	14:21:00	11.87	-0.03	11.97	11.86	0
run7	4/15/2009	14:21:15	11.9	-0.02	11.97	11.9	0.01
run7	4/15/2009	14:21:30	11.9	-0.03	11.99	12.11	0
run7	4/15/2009	14:21:45	11.92	-0.03	11.97	12.31	0
run7	4/15/2009	14:22:00	11.94	-0.03	11.97	13	0
run7	4/15/2009	14:22:15	11.95	-0.03	11.97	13.48	0.01
run7	4/15/2009	14:22:30	11.95	-0.02	12	13.81	0.01
run7	4/15/2009	14:22:45	11.94	-0.03	11.97	13.89	0
run7	4/15/2009	14:23:00	11.93	-0.03	11.97	13.99	0
run7	4/15/2009	14:23:15	11.93	-0.03	11.97	14.06	0
run7	4/15/2009	14:23:30	11.94	-0.03	12	14.2	0.01
run7	4/15/2009	14:23:45	11.96	-0.02	11.97	14.35	0.01
run7	4/15/2009	14:24:00	11.97	-0.03	11.97	14.42	0
run7	4/15/2009	14:24:15	11.97	-0.03	11.97	13.97	0
run7	4/15/2009	14:24:30	11.96	-0.03	11.97	13.33	0.01
run7	4/15/2009	14:24:45	11.93	-0.03	11.97	12.91	0
run7	4/15/2009	14:25:00	11.88	-0.02	11.97	12.18	0
run7	4/15/2009	14:25:15	11.85	-0.03	11.99	11.53	0
run7	4/15/2009	14:25:30	11.87	-0.04	11.97	11.31	0
run7	4/15/2009	14:25:45	11.91	-0.02	11.97	11.52	0.01
run7	4/15/2009	14:26:00	11.92	-0.03	11.97	11.87	0
run7	4/15/2009	14:26:15	11.91	-0.03	11.98	11.81	0
run7	4/15/2009	14:26:30	11.9	-0.02	11.97	11.66	0
run7	4/15/2009	14:26:45	11.91	-0.03	11.97	11.51	0
run7	4/15/2009	14:27:00	11.93	-0.02	11.98	11.58	0
run7	4/15/2009	14:27:15	11.94	-0.03	11.97	11.98	0
run7	4/15/2009	14:27:30	11.94	-0.03	11.97	12.77	0.01
run7	4/15/2009	14:27:45	11.93	-0.02	11.97	13.36	0
run7	4/15/2009	14:28:00	11.91	-0.03	11.97	13.7	0
run7	4/15/2009	14:28:15	11.9	-0.03	11.97	13.7	0
run7	4/15/2009	14:28:30	11.9	-0.03	11.97	13.89	0
run7	4/15/2009	14:28:45	11.9	-0.03	11.97	14.29	0
run7	4/15/2009	14:29:00	11.88	-0.02	11.97	14.43	0
run7	4/15/2009	14:29:15	11.84	-0.03	12	14.05	0.01
run7	4/15/2009	14:29:30	11.82	-0.02	11.97	13.5	0.01
run7	4/15/2009	14:29:45	11.77	-0.02	11.97	12.95	0
run7	4/15/2009	14:30:00	11.71	-0.03	11.97	11.89	0
run7	4/15/2009	14:30:15	11.68	-0.02	12	10.97	0
run7	4/15/2009	14:30:30	11.68	-0.03	11.97	9.99	0.01
run7	4/15/2009	14:30:45	11.69	-0.02	11.97	9.79	0.01
run7	4/15/2009	14:31:00	11.7	-0.03	11.97	10.05	0
run7	4/15/2009	14:31:15	11.71	-0.03	11.97	10.18	0
run7	4/15/2009	14:31:30	11.74	-0.02	11.97	10.36	0
run7	4/15/2009	14:31:45	11.78	-0.02	11.97	10.69	0
run7	4/15/2009	14:32:00	11.83	-0.03	11.97	11.49	0.01
run7	4/15/2009	14:32:15	11.84	-0.02	11.97	12.38	0

run7	4/15/2009	14:32:30	11.82	-0.03	11.97	12.61	0.01
run7	4/15/2009	14:32:45	11.83	-0.03	11.97	12.35	0.01
run7	4/15/2009	14:33:00	11.85	-0.02	11.97	12.5	0
run7	4/15/2009	14:33:15	11.87	-0.03	11.97	13.05	0
run7	4/15/2009	14:33:30	11.87	-0.02	11.97	13.46	0
run7	4/15/2009	14:33:45	11.87	-0.03	11.97	13.52	0
run7	4/15/2009	14:34:00	11.89	-0.03	11.97	13.77	0
run7	4/15/2009	14:34:15	11.9	-0.02	11.97	13.96	0
run7	4/15/2009	14:34:30	11.91	-0.03	11.97	13.99	0
run7	4/15/2009	14:34:45	11.91	-0.02	11.97	14.06	0
run7	4/15/2009	14:35:00	11.89	-0.03	11.97	13.93	0
run7	4/15/2009	14:35:15	11.87	-0.03	11.97	13.8	0
run7	4/15/2009	14:35:30	11.86	-0.02	11.97	13.55	0
run7	4/15/2009	14:35:45	11.85	-0.03	11.97	13.48	0
run7	4/15/2009	14:36:00	11.85	-0.02	11.97	13.69	0
run7	4/15/2009	14:36:15	11.85	-0.02	12	14.03	0
run7	4/15/2009	14:36:30	11.85	-0.04	11.97	14.06	0
run7	4/15/2009	14:36:45	11.86	-0.03	11.97	13.93	0
run7	4/15/2009	14:37:00	11.88	-0.03	11.97	13.93	0
run7	4/15/2009	14:37:15	11.88	-0.03	11.97	14.12	0
run7	4/15/2009	14:37:30	11.87	-0.02	11.97	13.99	0
run7	4/15/2009	14:37:45	11.85	-0.03	11.97	13.65	0
run7	4/15/2009	14:38:00	11.82	-0.03	11.97	13.05	0.01
run7	4/15/2009	14:38:15	11.81	-0.02	11.97	12.52	0
run7	4/15/2009	14:38:30	11.8	-0.03	11.97	12.19	0
run7	4/15/2009	14:38:45	11.81	-0.02	11.98	12.19	0
run7	4/15/2009	14:39:00	11.81	-0.03	11.98	12.09	0
run7	4/15/2009	14:39:15	11.83	-0.03	11.97	12.28	0.01
run7	4/15/2009	14:39:30	11.88	-0.03	11.98	12.97	0.01
run7	4/15/2009	14:39:45	11.92	-0.03	11.97	13.57	0
run7	4/15/2009	14:40:00	11.94	-0.03	11.97	14.19	0
run7	4/15/2009	14:40:15	11.94	-0.03	11.97	14.59	0.01
run7	4/15/2009	14:40:30	11.93	-0.03	12.01	14.87	0.01
run7	4/15/2009	14:40:45	11.91	-0.03	11.97	14.74	0
run7	4/15/2009	14:41:00	11.89	-0.03	11.97	14.52	0
run7	4/15/2009	14:41:15	11.85	-0.03	11.97	14.19	0
run7	4/15/2009	14:41:30	11.84	-0.03	11.98	13.76	0
run7	4/15/2009	14:41:45	11.86	-0.03	11.97	13.62	0
run7	4/15/2009	14:42:00	11.87	-0.03	11.97	13.46	0
run7	4/15/2009	14:42:15	11.87	-0.03	11.97	13.47	0
run7	4/15/2009	14:42:30	11.86	-0.03	11.97	13.7	0.01
run7	4/15/2009	14:42:45	11.83	-0.03	11.97	13.55	0
run7	4/15/2009	14:43:00	11.82	-0.02	11.97	13.03	0.01
run7	4/15/2009	14:43:15	11.82	-0.03	11.97	12.81	0
run7	4/15/2009	14:43:30	11.82	-0.03	11.97	12.58	0.01
run7	4/15/2009	14:43:45	11.82	-0.03	11.97	12.65	0.01
run7	4/15/2009	14:44:00	11.81	-0.02	11.97	12.55	0
run7	4/15/2009	14:44:15	11.82	-0.02	11.97	12.4	0
run7	4/15/2009	14:44:30	11.84	-0.02	11.97	12.32	0.01
run7	4/15/2009	14:44:45	11.87	-0.03	11.97	12.58	0
run7	4/15/2009	14:45:00	11.88	-0.03	11.97	13.35	0

run7	4/15/2009	14:45:15	11.88	-0.02	11.97	13.56	0
run7	4/15/2009	14:45:30	11.87	-0.03	11.97	13.66	0
run7	4/15/2009	14:45:45	11.86	-0.02	12	13.46	0.01
run7	4/15/2009	14:46:00	11.87	-0.03	11.97	12.99	0
run7	4/15/2009	14:46:15	11.88	-0.03	11.97	13.07	0
run7	4/15/2009	14:46:30	11.87	-0.03	12	13.19	0
run7	4/15/2009	14:46:45	11.86	-0.03	11.97	13.19	0.01
run7	4/15/2009	14:47:00	11.87	-0.03	11.97	13.15	0
run7	4/15/2009	14:47:15	11.86	-0.02	11.97	13.17	0.01
run7	4/15/2009	14:47:30	11.85	-0.03	11.97	13.47	0
run7	4/15/2009	14:47:45	11.85	-0.03	11.97	13.72	0
run7	4/15/2009	14:48:00	11.83	-0.03	12	13.54	0
run7	4/15/2009	14:48:15	11.82	-0.03	11.97	12.93	0.01
run7	4/15/2009	14:48:30	11.79	-0.02	11.97	12.32	0
run7	4/15/2009	14:48:45	11.77	-0.03	11.97	12.03	0
run7	4/15/2009	14:49:00	11.79	-0.03	11.97	11.74	0
run7	4/15/2009	14:49:15	11.83	-0.02	11.97	11.82	0.01
run7	4/15/2009	14:49:30	11.85	-0.03	11.97	12.55	0
run7	4/15/2009	14:49:45	11.88	-0.02	11.92	13.19	0
run7	4/15/2009	14:50:00	11.89	-0.03	11.97	13.66	0
run7	4/15/2009	14:50:15	11.91	-0.03	11.97	13.87	0
run7	4/15/2009	14:50:30	11.9	-0.03	11.95	13.96	0
run7	4/15/2009	14:50:45	11.89	-0.03	11.97	13.67	0
run7	4/15/2009	14:51:00	11.88	-0.02	11.97	13.32	0
run7	4/15/2009	14:51:15	11.87	-0.03	11.97	13.12	0
run7	4/15/2009	14:51:30	11.84	-0.03	11.97	12.56	0
run7	4/15/2009	14:51:45	11.84	-0.03	11.97	12.32	0
run7	4/15/2009	14:52:00	11.87	-0.03	11.94	12.6	0
run7	4/15/2009	14:52:15	11.9	-0.03	11.97	13.01	0
run7	4/15/2009	14:52:30	11.9	-0.03	11.99	13.28	0
run7	4/15/2009	14:52:45	11.89	-0.03	11.97	13.14	0
run7	4/15/2009	14:53:00	11.87	-0.03	11.97	12.95	0
run7	4/15/2009	14:53:15	11.87	-0.03	12	12.89	0
run7	4/15/2009	14:53:30	11.88	-0.03	11.97	12.97	0
run7	4/15/2009	14:53:45	11.89	-0.03	11.97	13.16	0
run7	4/15/2009	14:54:00	11.87	-0.03	11.99	13.02	0
run7	4/15/2009	14:54:15	11.89	-0.03	11.97	12.83	0
run7	4/15/2009	14:54:30	11.89	-0.03	11.97	13.03	0
run7	4/15/2009	14:54:45	11.89	-0.03	11.97	13.24	0
run7	4/15/2009	14:55:00	11.9	-0.03	11.97	13.36	0
run7	4/15/2009	14:55:15	11.89	-0.03	11.97	13.28	0
run7	4/15/2009	14:55:30	11.88	-0.02	11.97	13.11	0
run7	4/15/2009	14:55:45	11.86	-0.03	11.97	12.91	0
run7	4/15/2009	14:56:00	11.85	-0.03	11.97	12.71	0
run7	4/15/2009	14:56:15	11.84	-0.03	11.97	12.42	0
run7	4/15/2009	14:56:30	11.84	-0.03	11.97	12.09	0
run7	4/15/2009	14:56:45	11.85	-0.03	11.97	12.24	0
run7	4/15/2009	14:57:00	11.82	-0.03	11.97	12.44	0
run7	4/15/2009	14:57:15	11.78	-0.03	11.97	12.17	0
run7	4/15/2009	14:57:30	11.79	-0.03	11.97	12.24	0
run7	4/15/2009	14:57:45	11.81	-0.03	11.97	12.77	0

run7	4/15/2009	14:58:00	11.78	-0.03	11.97	12.69	0
run7	4/15/2009	14:58:15	11.78	-0.02	11.97	12.67	0
run7	4/15/2009	14:58:30	11.8	-0.02	11.97	13.21	0
run7	4/15/2009	14:58:45	11.8	-0.02	11.97	13.47	0
run7	4/15/2009	14:59:00	11.81	-0.03	11.97	13.63	0.01
run7	4/15/2009	14:59:15	11.83	-0.03	11.97	13.78	0.01
run7	4/15/2009	14:59:30	11.82	-0.03	11.97	13.95	0
run7	4/15/2009	14:59:45	11.82	-0.03	11.97	13.72	0.01
run7	4/15/2009	15:00:00	11.82	-0.02	11.97	13.45	0.01
run7	4/15/2009	15:00:15	11.8	-0.03	11.97	13.41	0
run7	4/15/2009	15:00:30	11.81	-0.02	11.97	13.54	0
run7	4/15/2009	15:00:45	11.81	-0.03	11.97	13.71	0
run7	4/15/2009	15:01:00	11.81	-0.02	11.97	13.65	0
run7	4/15/2009	15:01:15	11.83	-0.03	11.97	13.51	0.01
run7	4/15/2009	15:01:30	11.84	-0.03	11.97	13.58	0
run7	4/15/2009	15:01:45	11.84	-0.03	11.97	13.78	0
run7	4/15/2009	15:02:00	11.85	-0.03	11.97	13.93	0
run7	4/15/2009	15:02:15	11.84	-0.03	11.97	14.07	0
run7	4/15/2009	15:02:30	11.84	-0.03	11.97	14.19	0
run7	4/15/2009	15:02:45	11.85	-0.03	11.97	14.26	0
run7	4/15/2009	15:03:00	11.85	-0.02	11.97	14.38	0
run7	4/15/2009	15:03:15	11.86	-0.03	11.97	14.38	0
run7	4/15/2009	15:03:30	11.86	-0.03	11.97	14.38	0
run7	4/15/2009	15:03:45	11.87	-0.03	11.97	14.32	0
run7	4/15/2009	15:04:00	11.87	-0.03	11.97	14.38	0
run7	4/15/2009	15:04:15	11.85	-0.02	11.97	14.27	0
run7	4/15/2009	15:04:30	11.83	-0.03	11.97	13.87	0
run7	4/15/2009	15:04:45	11.83	-0.03	11.97	13.71	0
run7	4/15/2009	15:05:00	11.84	-0.02	11.97	13.93	0
run7	4/15/2009	15:05:15	11.83	-0.03	11.97	13.88	0.01
run7	4/15/2009	15:05:30	11.8	-0.03	11.97	13.38	0
run7	4/15/2009	15:05:45	11.8	-0.02	11.97	12.94	0
run7	4/15/2009	15:06:00	11.79	-0.03	11.97	12.55	0
run7	4/15/2009	15:06:15	11.79	-0.03	11.97	12.34	0
run7	4/15/2009	15:06:30	11.82	-0.03	11.97	12.75	0
run7	4/15/2009	15:06:45	11.85	-0.03	11.97	13.29	0
run7	4/15/2009	15:07:00	11.84	-0.02	11.97	13.64	0
run7	4/15/2009	15:07:15	11.79	-0.03	11.97	13.32	0
run7	4/15/2009	15:07:30	11.77	-0.03	11.97	12.66	0
run7	4/15/2009	15:07:45	11.79	-0.02	11.97	12.59	0
run7	4/15/2009	15:08:00	11.82	-0.03	11.97	13.07	0.01
run7	4/15/2009	15:08:15	11.82	-0.03	11.97	13.35	0.01
run7	4/15/2009	15:08:30	11.82	-0.03	11.97	13.21	0
run7	4/15/2009	15:08:45	11.84	-0.02	11.97	13.11	0
run7	4/15/2009	15:09:00	11.86	-0.03	11.97	13.37	0
run7	4/15/2009	15:09:15	11.87	-0.03	12	13.57	0
run7	4/15/2009	15:09:30	11.85	-0.02	11.97	13.66	0
run7	4/15/2009	15:09:45	11.82	-0.03	11.97	13.33	0
run7	4/15/2009	15:10:00	11.83	-0.02	12.01	13.22	0
run7	4/15/2009	15:10:15	11.84	-0.02	11.97	13.55	0
run7	4/15/2009	15:10:30	11.84	-0.03	11.97	13.66	0

run7	4/15/2009	15:10:45	11.83	-0.02	11.97	13.24	0	
run7	4/15/2009	15:11:00	11.81	-0.03	12	12.8	0	
run7	4/15/2009	15:11:15	11.81	-0.03	11.97	12.61	0	
run7	4/15/2009	15:11:30	11.82	-0.03	11.97	12.62	0.01	
run7	4/15/2009	15:11:45	11.82	-0.03	11.98	12.67	0.01	
averun7	4/15/2009	14:12:00	11.85	-0.03	11.97	13.07	0	60
scg6	4/15/2009	15:12:00	11.81	-0.02	11.98	12.54	0	ALM05992
scg6	4/15/2009	15:12:15	11.8	-0.02	31.57	12.26	0	ALM05992
scg6	4/15/2009	15:12:30	11.79	-0.03	30.87	12.27	0	ALM05992
scg6	4/15/2009	15:12:45	10.49	-0.03	31.48	12.31	0	ALM05992
scg6	4/15/2009	15:13:00	5.99	-0.03	33.86	10.08	0	ALM05992
scg6	4/15/2009	15:13:15	2.88	-0.02	29.01	6.24	0	ALM05992
scg6	4/15/2009	15:13:30	1.65	-0.03	29.31	3.22	0	ALM05992
scg6	4/15/2009	15:13:45	1.01	-0.03	30.61	2.2	0	ALM05992
scg6	4/15/2009	15:14:00	0.2	-0.03	32.84	1.82	0	ALM05992
scg6	4/15/2009	15:14:15	0.12	-0.03	40.67	1.61	0	ALM05992
scg6	4/15/2009	15:14:30	0.1	-0.03	44.57	1.47	0	ALM05992
scg6	4/15/2009	15:14:45	0.08	-0.03	44.36	1.34	0	ALM05992
scg6	4/15/2009	15:15:00	0.07	-0.03	44.41	1.32	0	ALM05992
o2zero1	4/15/2009	15:14:45	0.08	-0.03	44.41	1.34	0	ALM05992
so2span1	4/15/2009	15:15:00	0.07	-0.03	44.41	1.32	0	ALM05992
scg9	4/15/2009	15:15:15	0.06	-0.02	47.91	1.24	0.02	ALM00690
scg9	4/15/2009	15:15:30	0.04	-0.04	48.96	1.17	0.08	ALM00690
scg9	4/15/2009	15:15:45	0.04	-0.03	49.6	1.09	0.13	ALM00690
scg9	4/15/2009	15:16:00	0.03	-0.03	50.69	1.05	0.12	ALM00690
scg9	4/15/2009	15:16:15	0.16	-0.03	50.25	1.02	0.01	ALM00690
scg9	4/15/2009	15:16:30	0.89	-0.03	49.82	0.86	0	ALM00690
scg9	4/15/2009	15:16:45	1.6	-0.04	46.66	0.72	0	ALM00690
scg9	4/15/2009	15:17:00	1.97	-0.03	35.61	0.56	0	ALM00690
scg9	4/15/2009	15:17:15	2.13	-0.03	20.47	0.58	0.01	ALM00690
scg9	4/15/2009	15:17:30	3.4	-0.04	7.53	0.51	0	ALM00690
scg9	4/15/2009	15:17:45	8.88	-0.03	0.9	0.51	0	ALM00690
scg9	4/15/2009	15:18:00	10.08	-0.03	0.8	0.51	0	ALM00690
scg9	4/15/2009	15:18:15	11.79	-0.03	1	0.44	0	ALM00690
scg9	4/15/2009	15:18:30	11.82	-0.02	1.1	0.42	0.01	ALM00690
scg9	4/15/2009	15:18:45	11.85	-0.03	1.7	0.43	0	ALM00690
so2zero1	4/15/2009	15:17:45	8.88	-0.03	0.8	0.51	0	ALM00690
o2span1	4/15/2009	15:18:45	11.85	-0.03	1	0.43	0	ALM00690
run8	4/15/2009	15:21:30	11.72	-0.03	1.79	11.71	0	
run8	4/15/2009	15:21:45	11.73	-0.03	2.62	12.18	0	
run8	4/15/2009	15:22:00	11.71	-0.02	8.37	12.57	0	
run8	4/15/2009	15:22:15	11.69	-0.03	7.91	12.67	0	
run8	4/15/2009	15:22:30	11.69	-0.03	7.86	12.58	0	
run8	4/15/2009	15:22:45	11.7	-0.03	7.75	12.79	0	
run8	4/15/2009	15:23:00	11.7	-0.03	7.39	12.99	0	
run8	4/15/2009	15:23:15	11.71	-0.02	7.26	13.18	0	
run8	4/15/2009	15:23:30	11.72	-0.03	7.17	13.69	0	
run8	4/15/2009	15:23:45	11.72	-0.03	7.24	13.88	0	
run8	4/15/2009	15:24:00	11.72	-0.03	7.17	13.75	0	
run8	4/15/2009	15:24:15	11.72	-0.03	7.03	13.68	0	
run8	4/15/2009	15:24:30	11.71	-0.03	7.05	13.54	0	

run8	4/15/2009	15:24:45	11.72	-0.03	6.93	13.31	0
run8	4/15/2009	15:25:00	11.71	-0.02	10.61	13.1	0
run8	4/15/2009	15:25:15	11.7	-0.03	10.61	12.99	0
run8	4/15/2009	15:25:30	11.7	-0.03	10.61	12.99	0
run8	4/15/2009	15:25:45	11.69	-0.03	10.61	12.98	0
run8	4/15/2009	15:26:00	11.68	-0.03	10.61	12.89	0
run8	4/15/2009	15:26:15	11.68	-0.03	10.61	12.78	0
run8	4/15/2009	15:26:30	11.66	-0.03	10.61	12.53	0
run8	4/15/2009	15:26:45	11.67	-0.03	10.61	12.41	0
run8	4/15/2009	15:27:00	11.69	-0.03	10.61	12.57	0
run8	4/15/2009	15:27:15	11.68	-0.03	10.61	12.82	0
run8	4/15/2009	15:27:30	11.68	-0.03	10.61	12.63	0
run8	4/15/2009	15:27:45	11.66	-0.03	10.61	12.32	0
run8	4/15/2009	15:28:00	11.66	-0.03	10.61	12.23	0
run8	4/15/2009	15:28:15	11.65	-0.03	10.61	12.38	0
run8	4/15/2009	15:28:30	11.63	-0.03	10.61	12.48	0.02
run8	4/15/2009	15:28:45	11.61	-0.02	10.61	12.38	0
run8	4/15/2009	15:29:00	11.62	-0.02	10.61	12.14	0.01
run8	4/15/2009	15:29:15	11.65	-0.03	10.61	12.22	0
run8	4/15/2009	15:29:30	11.67	-0.02	10.61	12.53	0
run8	4/15/2009	15:29:45	11.67	-0.03	10.61	12.59	0
run8	4/15/2009	15:30:00	11.67	-0.03	10.61	12.73	0
run8	4/15/2009	15:30:15	11.66	-0.03	10.61	12.99	0
run8	4/15/2009	15:30:30	11.65	-0.03	10.61	13.24	0
run8	4/15/2009	15:30:45	11.66	-0.03	10.61	13.28	0
run8	4/15/2009	15:31:00	11.67	-0.03	10.61	13.38	0
run8	4/15/2009	15:31:15	11.67	-0.03	10.61	13.58	0
run8	4/15/2009	15:31:30	11.67	-0.02	10.61	13.54	0
run8	4/15/2009	15:31:45	11.68	-0.03	10.61	13.59	0
run8	4/15/2009	15:32:00	11.66	-0.03	10.61	13.65	0
run8	4/15/2009	15:32:15	11.62	-0.03	10.61	13.2	0.01
run8	4/15/2009	15:32:30	11.61	-0.03	10.61	12.75	0
run8	4/15/2009	15:32:45	11.61	-0.02	10.61	12.62	0.01
run8	4/15/2009	15:33:00	11.57	-0.03	10.61	12.74	0
run8	4/15/2009	15:33:15	11.56	-0.03	10.61	12.5	0
run8	4/15/2009	15:33:30	11.57	-0.03	10.61	12.33	0
run8	4/15/2009	15:33:45	11.58	-0.02	10.61	12.32	0
run8	4/15/2009	15:34:00	11.6	-0.02	10.61	12.64	0
run8	4/15/2009	15:34:15	11.62	-0.03	10.61	13.01	0.01
run8	4/15/2009	15:34:30	11.63	-0.03	10.61	13.38	0.02
run8	4/15/2009	15:34:45	11.64	-0.03	10.61	13.66	0.02
run8	4/15/2009	15:35:00	11.65	-0.03	10.61	13.65	0
run8	4/15/2009	15:35:15	11.65	-0.03	10.61	13.37	0.01
run8	4/15/2009	15:35:30	11.64	-0.03	10.61	12.87	0.02
run8	4/15/2009	15:35:45	11.63	-0.02	10.61	12.52	0.02
run8	4/15/2009	15:36:00	11.62	-0.02	10.61	12.5	0.01
run8	4/15/2009	15:36:15	11.61	-0.02	10.61	12.37	0
run8	4/15/2009	15:36:30	11.61	-0.02	10.61	11.97	0
run8	4/15/2009	15:36:45	11.58	-0.02	10.61	11.59	0
run8	4/15/2009	15:37:00	11.57	-0.03	10.61	11.42	0
run8	4/15/2009	15:37:15	11.58	-0.03	10.61	11.26	0

run8	4/15/2009	15:37:30	11.59	-0.03	10.61	11.13	0
run8	4/15/2009	15:37:45	11.59	-0.03	10.61	10.99	0
run8	4/15/2009	15:38:00	11.59	-0.03	10.61	10.89	0
run8	4/15/2009	15:38:15	11.58	-0.03	10.61	10.85	0
run8	4/15/2009	15:38:30	11.56	-0.03	10.61	10.54	0
run8	4/15/2009	15:38:45	11.58	-0.02	10.61	10.46	0
run8	4/15/2009	15:39:00	11.62	-0.03	10.61	11.1	0
run8	4/15/2009	15:39:15	11.65	-0.03	10.61	12.01	0.01
run8	4/15/2009	15:39:30	11.67	-0.03	10.61	12.7	0
run8	4/15/2009	15:39:45	11.68	-0.03	10.61	13.25	0
run8	4/15/2009	15:40:00	11.67	-0.03	10.61	13.43	0
run8	4/15/2009	15:40:15	11.66	-0.03	10.61	13.11	0
run8	4/15/2009	15:40:30	11.66	-0.03	10.61	13.04	0
run8	4/15/2009	15:40:45	11.65	-0.03	10.61	13.37	0
run8	4/15/2009	15:41:00	11.65	-0.03	10.61	13.65	0.01
run8	4/15/2009	15:41:15	11.64	-0.03	10.61	13.8	0.01
run8	4/15/2009	15:41:30	11.65	-0.03	10.61	13.99	0
run8	4/15/2009	15:41:45	11.66	-0.03	10.61	14.07	0
run8	4/15/2009	15:42:00	11.65	-0.03	10.61	13.83	0
run8	4/15/2009	15:42:15	11.64	-0.03	10.61	13.2	0.01
run8	4/15/2009	15:42:30	11.65	-0.03	10.61	12.79	0
run8	4/15/2009	15:42:45	11.67	-0.03	10.61	12.56	0
run8	4/15/2009	15:43:00	11.67	-0.03	10.61	12.27	0
run8	4/15/2009	15:43:15	11.65	-0.03	10.61	11.96	0.01
run8	4/15/2009	15:43:30	11.34	-0.03	10.61	11.64	0
run8	4/15/2009	15:43:45	11.32	-0.03	10.61	11.4	0
run8	4/15/2009	15:44:00	11.32	-0.03	10.61	11.35	0
run8	4/15/2009	15:44:15	11.34	-0.03	10.61	11.59	0
run8	4/15/2009	15:44:30	11.37	-0.03	10.61	11.88	0
run8	4/15/2009	15:44:45	11.37	-0.03	10.61	12.09	0
run8	4/15/2009	15:45:00	11.37	-0.03	10.61	12.24	0
run8	4/15/2009	15:45:15	11.39	-0.02	10.61	12.39	0
run8	4/15/2009	15:45:30	11.39	-0.03	10.61	12.59	0
run8	4/15/2009	15:45:45	11.38	-0.03	10.61	12.75	0
run8	4/15/2009	15:46:00	11.37	-0.03	10.61	12.63	0
run8	4/15/2009	15:46:15	11.38	-0.02	10.61	12.54	0
run8	4/15/2009	15:46:30	11.39	-0.02	10.61	12.68	0
run8	4/15/2009	15:46:45	11.4	-0.03	10.61	12.87	0
run8	4/15/2009	15:47:00	11.4	-0.03	10.61	12.89	0
run8	4/15/2009	15:47:15	11.4	-0.03	10.61	12.52	0
run8	4/15/2009	15:47:30	11.4	-0.03	10.61	12.28	0
run8	4/15/2009	15:47:45	11.38	-0.03	10.61	12.13	0
run8	4/15/2009	15:48:00	11.33	-0.03	10.61	11.61	0
run8	4/15/2009	15:48:15	11.32	-0.03	10.61	11.12	0
run8	4/15/2009	15:48:30	11.33	-0.03	10.61	11.09	0
run8	4/15/2009	15:48:45	11.31	-0.03	10.61	11.17	0.01
run8	4/15/2009	15:49:00	11.31	-0.03	10.61	11.19	0.02
run8	4/15/2009	15:49:15	11.33	-0.03	10.61	11.57	0.01
run8	4/15/2009	15:49:30	11.34	-0.03	10.61	12.11	0
run8	4/15/2009	15:49:45	11.34	-0.03	10.61	12.67	0
run8	4/15/2009	15:50:00	11.32	-0.02	10.61	12.99	0.01

run8	4/15/2009	15:50:15	11.3	-0.02	10.61	12.91	0.03
run8	4/15/2009	15:50:30	11.29	-0.03	10.61	12.53	0.04
run8	4/15/2009	15:50:45	11.3	-0.03	10.61	12.82	0.03
run8	4/15/2009	15:51:00	11.32	-0.03	10.61	13.47	0.01
run8	4/15/2009	15:51:15	11.3	-0.03	10.61	13.72	0.02
run8	4/15/2009	15:51:30	11.26	-0.02	10.61	13.17	0.01
run8	4/15/2009	15:51:45	11.2	-0.03	10.61	12.06	0
run8	4/15/2009	15:52:00	11.18	-0.03	10.61	11.17	0
run8	4/15/2009	15:52:15	11.22	-0.03	10.61	11.17	0
run8	4/15/2009	15:52:30	11.26	-0.02	10.61	11.79	0.01
run8	4/15/2009	15:52:45	11.29	-0.03	10.61	12.38	0.04
run8	4/15/2009	15:53:00	11.28	-0.02	10.61	12.63	0.03
run8	4/15/2009	15:53:15	11.28	-0.03	10.6	12.73	0.03
run8	4/15/2009	15:53:30	11.3	-0.03	10.61	13.01	0.04
run8	4/15/2009	15:53:45	11.29	-0.03	10.62	13.29	0.03
run8	4/15/2009	15:54:00	11.29	-0.03	10.61	13.56	0.04
run8	4/15/2009	15:54:15	11.3	-0.03	10.61	13.81	0.03
run8	4/15/2009	15:54:30	11.3	-0.03	10.63	13.96	0.02
run8	4/15/2009	15:54:45	11.29	-0.03	10.61	13.94	0.03
run8	4/15/2009	15:55:00	11.27	-0.02	10.61	13.63	0.02
run8	4/15/2009	15:55:15	11.25	-0.01	10.61	12.96	0
run8	4/15/2009	15:55:30	11.24	-0.02	10.61	12.48	0
run8	4/15/2009	15:55:45	11.25	-0.01	10.63	12.32	0
run8	4/15/2009	15:56:00	11.28	-0.03	10.61	12.55	0.03
run8	4/15/2009	15:56:15	11.31	-0.03	10.61	13	0.02
run8	4/15/2009	15:56:30	11.3	-0.03	10.62	13.14	0.02
run8	4/15/2009	15:56:45	11.27	-0.03	10.61	12.8	0.02
run8	4/15/2009	15:57:00	11.27	-0.02	10.61	12.27	0.01
run8	4/15/2009	15:57:15	11.29	-0.03	10.62	12.45	0.03
run8	4/15/2009	15:57:30	11.32	-0.03	10.61	12.91	0.01
run8	4/15/2009	15:57:45	11.31	-0.03	10.61	13.17	0.01
run8	4/15/2009	15:58:00	11.32	-0.03	10.6	13.14	0
run8	4/15/2009	15:58:15	11.32	-0.03	10.61	12.96	0.01
run8	4/15/2009	15:58:30	11.3	-0.02	10.61	12.61	0.03
run8	4/15/2009	15:58:45	11.3	-0.03	10.62	12.29	0.02
run8	4/15/2009	15:59:00	11.26	-0.02	10.61	11.96	0.01
run8	4/15/2009	15:59:15	11.24	-0.02	10.61	11.34	0
run8	4/15/2009	15:59:30	11.28	-0.02	10.61	11.47	0.03
run8	4/15/2009	15:59:45	11.29	-0.03	10.6	11.88	0.03
run8	4/15/2009	16:00:00	11.3	-0.03	10.61	12.04	0.02
run8	4/15/2009	16:00:15	11.28	-0.03	10.61	11.87	0.02
run8	4/15/2009	16:00:30	11.26	-0.02	10.6	11.56	0.02
run8	4/15/2009	16:00:45	11.27	-0.03	10.61	11.44	0.02
run8	4/15/2009	16:01:00	11.32	-0.03	10.6	11.9	0.01
run8	4/15/2009	16:01:15	11.34	-0.03	10.61	12.46	0
run8	4/15/2009	16:01:30	11.33	-0.03	10.61	12.85	0
run8	4/15/2009	16:01:45	11.29	-0.03	10.61	12.31	0.03
run8	4/15/2009	16:02:00	11.31	-0.03	10.6	11.82	0.02
run8	4/15/2009	16:02:15	11.35	-0.03	10.61	12.28	0
run8	4/15/2009	16:02:30	11.38	-0.03	10.61	13.06	0
run8	4/15/2009	16:02:45	11.38	-0.03	10.62	13.65	0

run8	4/15/2009	16:03:00	11.37	-0.03	10.61	13.59	0
run8	4/15/2009	16:03:15	11.39	-0.03	10.61	13.55	0
run8	4/15/2009	16:03:30	11.4	-0.03	10.63	13.87	0
run8	4/15/2009	16:03:45	11.37	-0.03	10.61	13.92	0
run8	4/15/2009	16:04:00	11.36	-0.03	10.61	13.52	0
run8	4/15/2009	16:04:15	11.34	-0.03	10.63	12.93	0
run8	4/15/2009	16:04:30	11.33	-0.03	10.61	12.73	0
run8	4/15/2009	16:04:45	11.39	-0.03	10.62	12.71	0
run8	4/15/2009	16:05:00	11.39	-0.03	10.61	12.85	0
run8	4/15/2009	16:05:15	11.4	-0.02	10.64	12.98	0.01
run8	4/15/2009	16:05:30	11.41	-0.03	10.61	12.88	0.01
run8	4/15/2009	16:05:45	11.41	-0.03	10.61	12.91	0.01
run8	4/15/2009	16:06:00	11.43	-0.03	10.61	13.22	0
run8	4/15/2009	16:06:15	11.45	-0.03	10.61	13.62	0
run8	4/15/2009	16:06:30	11.46	-0.03	10.61	13.8	0
run8	4/15/2009	16:06:45	11.47	-0.03	10.62	13.77	0
run8	4/15/2009	16:07:00	11.47	-0.02	10.61	13.59	0.01
run8	4/15/2009	16:07:15	11.46	-0.02	10.61	13.33	0
run8	4/15/2009	16:07:30	11.46	-0.02	10.63	12.91	0
run8	4/15/2009	16:07:45	11.51	-0.02	10.61	12.63	0
run8	4/15/2009	16:08:00	11.68	-0.03	10.61	12.37	0
run8	4/15/2009	16:08:15	11.71	-0.03	10.62	12.22	0
run8	4/15/2009	16:08:30	11.74	-0.03	10.61	12.47	0
run8	4/15/2009	16:08:45	11.9	-0.03	10.61	12.86	0
run8	4/15/2009	16:09:00	12.06	-0.03	10.61	13.09	0
run8	4/15/2009	16:09:15	12.01	-0.03	10.63	13.12	0
run8	4/15/2009	16:09:30	11.99	-0.03	10.61	12.99	0
run8	4/15/2009	16:09:45	11.97	-0.03	10.61	13.08	0
run8	4/15/2009	16:10:00	11.97	-0.03	10.61	13.04	0
run8	4/15/2009	16:10:15	11.97	-0.03	10.61	12.73	0
run8	4/15/2009	16:10:30	11.99	-0.03	10.61	12.91	0
run8	4/15/2009	16:10:45	12.01	-0.03	10.63	13.42	0
run8	4/15/2009	16:11:00	12.02	-0.03	10.61	13.76	0
run8	4/15/2009	16:11:15	12.02	-0.03	10.61	13.87	0
run8	4/15/2009	16:11:30	12.02	-0.03	10.62	13.68	0
run8	4/15/2009	16:11:45	12.02	-0.03	10.61	13.51	0
run8	4/15/2009	16:12:00	12.03	-0.03	10.61	13.5	0
run8	4/15/2009	16:12:15	12.02	-0.03	10.61	13.72	0
run8	4/15/2009	16:12:30	12	-0.03	10.63	13.68	0
run8	4/15/2009	16:12:45	12.01	-0.02	10.61	13.53	0
run8	4/15/2009	16:13:00	12.01	-0.03	10.61	13.54	0
run8	4/15/2009	16:13:15	12.01	-0.03	10.63	13.27	0
run8	4/15/2009	16:13:30	12.03	-0.03	10.61	13.19	0
run8	4/15/2009	16:13:45	12.05	-0.03	10.61	13.22	0
run8	4/15/2009	16:14:00	12.09	-0.03	10.61	13.35	0
run8	4/15/2009	16:14:15	12.12	-0.03	10.62	13.71	0
run8	4/15/2009	16:14:30	12.13	-0.03	10.61	13.67	0
run8	4/15/2009	16:14:45	12.14	-0.03	10.61	13.28	0
run8	4/15/2009	16:15:00	12.16	-0.03	10.61	12.74	0
run8	4/15/2009	16:15:15	12.21	-0.03	10.63	12.39	0
run8	4/15/2009	16:15:30	12.25	-0.03	10.61	12.5	0

run8	4/15/2009	16:15:45	12.28	-0.03	10.61	12.58	0	
run8	4/15/2009	16:16:00	12.31	-0.03	10.61	12.58	0	
run8	4/15/2009	16:16:15	12.3	-0.03	10.61	12.55	0	
run8	4/15/2009	16:16:30	12.3	-0.03	10.61	12.49	0	
run8	4/15/2009	16:16:45	12.29	-0.03	10.61	12.42	0	
run8	4/15/2009	16:17:00	12.29	-0.03	10.62	12.54	0	
run8	4/15/2009	16:17:15	12.31	-0.03	10.61	12.58	0	
run8	4/15/2009	16:17:30	12.31	-0.03	10.63	12.65	0	
run8	4/15/2009	16:17:45	12.3	-0.03	10.61	12.66	0	
run8	4/15/2009	16:18:00	12.3	-0.03	10.61	12.58	0	
run8	4/15/2009	16:18:15	12.3	-0.03	10.62	12.58	0	
run8	4/15/2009	16:18:30	12.3	-0.03	10.61	12.52	0	
run8	4/15/2009	16:18:45	12.3	-0.03	10.62	12.43	0	
run8	4/15/2009	16:19:00	12.3	-0.03	10.61	12.28	0	
run8	4/15/2009	16:19:15	12.32	-0.03	10.63	12.5	0	
run8	4/15/2009	16:19:30	12.33	-0.03	10.61	12.72	0	
run8	4/15/2009	16:19:45	12.32	-0.03	10.63	12.83	0	
run8	4/15/2009	16:20:00	12.32	-0.03	10.61	12.61	0	
run8	4/15/2009	16:20:15	12.31	-0.03	10.61	12.33	0	
run8	4/15/2009	16:20:30	12.31	-0.03	10.63	12.09	0	
run8	4/15/2009	16:20:45	12.33	-0.03	10.61	11.82	0	
run8	4/15/2009	16:21:00	12.35	-0.03	10.61	11.95	0	
run8	4/15/2009	16:21:15	12.42	-0.03	10.62	12.3	0	
run8	4/15/2009	16:21:30	12.47	-0.03	10.61	12.44	0	
run8	4/15/2009	16:21:45	12.52	0.01	10.61	12.63	0.02	
run8	4/15/2009	16:22:00	12.58	-0.01	10.63	12.91	0.11	
run8	4/15/2009	16:22:15	12.63	-0.03	10.61	13.25	0.16	
run8	4/15/2009	16:22:30	12.64	-0.03	10.62	13.46	0.13	
run8	4/15/2009	16:22:45	12.57	0.01	10.63	13.71	0.09	
run8	4/15/2009	16:23:00	12.53	0.02	10.61	13.73	0.04	
run8	4/15/2009	16:23:15	12.49	-0.01	10.62	13.67	0	
run8	4/15/2009	16:23:30	12.46	-0.04	10.61	13.66	0	
run8	4/15/2009	16:23:45	12.44	-0.04	10.64	13.7	0	
run8	4/15/2009	16:24:00	12.4	-0.03	10.61	13.7	0	
run8	4/15/2009	16:24:15	12.36	-0.03	10.61	13.53	0	
run8	4/15/2009	16:24:30	12.27	-0.03	10.61	13.08	0	O_2 Avg 11.85 ΔO_2 Avg 10.61
run8	4/15/2009	16:24:45	12.21	-0.03	10.61	12.32	0	Avg O2 11
scg9	4/15/2009	16:27:45	12.38	-0.03	13.81	11.2	0	ALM00690
scg9	4/15/2009	16:28:00	12.43	-0.03	13.94	10.34	0	ALM00690
scg9	4/15/2009	16:28:15	12.46	-0.03	14.18	10.78	0	ALM00690
scg9	4/15/2009	16:28:30	12.61	-0.01	13.99	10.87	0.08	ALM00690
scg9	4/15/2009	16:28:45	12.29	-0.02	14.04	7.73	0.01	ALM00690
scg9	4/15/2009	16:29:00	12.07	-0.02	14.58	4.65	0	ALM00690
scg9	4/15/2009	16:29:15	12.11	-0.02	15.23	2.45	0	ALM00690
scg9	4/15/2009	16:29:30	12.18	-0.02	7.81	1.64	0	ALM00690
scg9	4/15/2009	16:29:45	12.2	-0.03	0.11	1.15	0	ALM00690
scg9	4/15/2009	16:30:00	12.23	-0.03	0.33	0.94	0	ALM00690
so2zero1	4/15/2009	16:29:45	12.2	-0.03	0.11	1.15	0	ALM00690
o2span1	4/15/2009	16:29:15	12.11	-0.02	0.23	2.45	0	ALM00690
scg6	4/15/2009	16:30:15	12.28	-0.03	0.88	0.81	0	ALM05992
scg6	4/15/2009	16:30:30	12.28	-0.03	0.82	0.81	0	ALM05992

scg6	4/15/2009	16:30:45	12.33	-0.03	0.98	0.81	0	ALM05992
scg6	4/15/2009	16:31:00	12.22	-0.03	1.24	0.8	0	ALM05992
scg6	4/15/2009	16:31:15	11.41	-0.02	1.45	0.81	0	ALM05992
scg6	4/15/2009	16:31:30	7.25	-0.03	1.36	0.74	0	ALM05992
scg6	4/15/2009	16:31:45	3.59	-0.03	0.41	0.9	0	ALM05992
scg6	4/15/2009	16:32:00	1.89	-0.02	2.46	0.97	0	ALM05992
scg6	4/15/2009	16:32:15	1.03	-0.03	23.17	1	0	ALM05992
scg6	4/15/2009	16:32:30	0.41	-0.03	29.3	1.08	0	ALM05992
scg6	4/15/2009	16:32:45	0.33	-0.03	36.71	1.14	0	ALM05992
scg6	4/15/2009	16:33:00	0.28	-0.03	42.11	1.13	0	ALM05992
scg6	4/15/2009	16:33:15	0.24	-0.03	45.36	1.12	0	ALM05992
o2zero1	4/15/2009	16:33:00	0.28	-0.03	44.37	1.13	0	ALM05992
so2span1	4/15/2009	16:33:15	0.24	-0.03	44.37	1.12	0	ALM05992
run9	4/15/2009	16:33:30	0.21	-0.03	50.45	1.12	0	
run9	4/15/2009	16:33:45	0.2	-0.03	51.48	1.17	0	
run9	4/15/2009	16:34:00	0.21	-0.03	52.24	1.12	0	
run9	4/15/2009	16:34:15	0.23	-0.03	52.97	1.12	0	
run9	4/15/2009	16:34:30	0.54	-0.03	53.05	1.25	0	
run9	4/15/2009	16:34:45	2.21	-0.03	53.05	3.37	0	
run9	4/15/2009	16:35:00	3.9	-0.02	53.09	6.57	0	
run9	4/15/2009	16:35:15	6	-0.03	49.91	9.6	0	
run9	4/15/2009	16:35:30	11.64	-0.03	42.62	10.55	0	
run9	4/15/2009	16:35:45	11.95	-0.02	33.27	10.29	0	
run9	4/15/2009	16:36:00	11.94	-0.03	24.65	10.58	0	
run9	4/15/2009	16:36:15	11.65	-0.03	18.54	10.72	0.01	
run9	4/15/2009	16:36:30	11.72	-0.02	14.76	11.99	0	
run9	4/15/2009	16:36:45	11.78	-0.03	11.63	11.99	0	
run9	4/15/2009	16:37:00	11.8	-0.02	10.86	11.99	0	
run9	4/15/2009	16:37:15	11.8	-0.02	10.86	11.99	0	
run9	4/15/2009	16:37:30	11.81	-0.03	10.86	11.99	0	
run9	4/15/2009	16:37:45	11.82	-0.02	10.86	11.99	0.01	
run9	4/15/2009	16:38:00	11.83	-0.03	10.86	11.99	0.01	
run9	4/15/2009	16:38:15	11.83	-0.03	10.86	11.99	0.02	
run9	4/15/2009	16:38:30	11.84	-0.03	10.86	11.99	0.01	
run9	4/15/2009	16:38:45	11.86	-0.03	10.86	11.99	0	
run9	4/15/2009	16:39:00	11.88	-0.03	10.86	11.99	0	
run9	4/15/2009	16:39:15	11.91	-0.03	10.86	11.99	0	
run9	4/15/2009	16:39:30	11.92	-0.02	10.86	11.99	0	
run9	4/15/2009	16:39:45	11.95	-0.02	10.86	11.99	0.01	
run9	4/15/2009	16:40:00	11.98	-0.03	10.86	11.99	0	
run9	4/15/2009	16:40:15	11.99	-0.02	10.86	11.99	0	
run9	4/15/2009	16:40:30	11.94	-0.03	10.86	11.99	0.01	
run9	4/15/2009	16:40:45	11.73	-0.03	10.86	11.99	0	
run9	4/15/2009	16:41:00	11.69	-0.03	10.86	11.99	0	
run9	4/15/2009	16:41:15	11.68	-0.02	10.86	11.99	0	
run9	4/15/2009	16:41:30	11.68	-0.03	10.86	11.99	0	
run9	4/15/2009	16:41:45	11.68	-0.02	10.86	11.99	0	
run9	4/15/2009	16:42:00	11.67	-0.02	10.86	11.99	0	
run9	4/15/2009	16:42:15	11.65	-0.02	10.86	11.99	0.01	
run9	4/15/2009	16:42:30	11.65	-0.02	10.86	11.99	0.01	
run9	4/15/2009	16:42:45	11.65	-0.02	10.86	11.99	0.01	

run9	4/15/2009	16:43:00	11.66	-0.02	10.86	11.99	0.01
run9	4/15/2009	16:43:15	11.67	-0.02	10.86	11.99	0
run9	4/15/2009	16:43:30	11.68	-0.03	10.86	11.99	0
run9	4/15/2009	16:43:45	11.68	-0.03	10.86	11.99	0
run9	4/15/2009	16:44:00	11.67	-0.02	10.86	11.99	0
run9	4/15/2009	16:44:15	11.68	-0.03	10.86	11.99	0
run9	4/15/2009	16:44:30	11.68	-0.02	10.86	11.99	0
run9	4/15/2009	16:44:45	11.69	-0.03	10.86	11.99	0
run9	4/15/2009	16:45:00	11.69	-0.02	10.86	11.99	0
run9	4/15/2009	16:45:15	11.69	-0.03	10.86	11.99	0
run9	4/15/2009	16:45:30	11.68	-0.03	10.86	11.99	0
run9	4/15/2009	16:45:45	11.66	-0.02	10.86	11.99	0
run9	4/15/2009	16:46:00	11.65	-0.02	10.86	11.99	0.01
run9	4/15/2009	16:46:15	11.65	-0.03	10.86	11.99	0.02
run9	4/15/2009	16:46:30	11.66	-0.03	10.86	11.99	0.01
run9	4/15/2009	16:46:45	11.65	-0.02	10.86	11.99	0.01
run9	4/15/2009	16:47:00	11.64	-0.03	10.86	11.99	0.02
run9	4/15/2009	16:47:15	11.61	-0.02	10.86	11.99	0
run9	4/15/2009	16:47:30	11.58	-0.03	10.86	11.99	0
run9	4/15/2009	16:47:45	11.58	-0.03	10.86	11.99	0
run9	4/15/2009	16:48:00	11.59	-0.03	10.86	11.99	0
run9	4/15/2009	16:48:15	11.58	-0.03	10.86	11.99	0
run9	4/15/2009	16:48:30	11.57	-0.03	10.86	11.99	0
run9	4/15/2009	16:48:45	11.57	-0.03	10.86	11.99	0
run9	4/15/2009	16:49:00	11.59	-0.02	10.86	11.99	0
run9	4/15/2009	16:49:15	11.59	-0.02	10.86	11.99	0
run9	4/15/2009	16:49:30	11.6	-0.02	10.86	11.99	0
run9	4/15/2009	16:49:45	11.61	-0.02	10.86	11.99	0
run9	4/15/2009	16:50:00	11.59	-0.03	10.86	11.99	0
run9	4/15/2009	16:50:15	11.58	-0.03	10.86	11.99	0
run9	4/15/2009	16:50:30	11.57	-0.03	10.86	11.99	0
run9	4/15/2009	16:50:45	11.57	-0.03	10.86	11.99	0
run9	4/15/2009	16:51:00	11.56	-0.03	10.86	11.99	0
run9	4/15/2009	16:51:15	11.57	-0.03	10.86	11.99	0
run9	4/15/2009	16:51:30	11.56	-0.03	10.86	11.99	0
run9	4/15/2009	16:51:45	11.57	-0.03	10.86	11.99	0
run9	4/15/2009	16:52:00	11.58	-0.03	10.86	11.99	0
run9	4/15/2009	16:52:15	11.58	-0.02	10.86	11.99	0
run9	4/15/2009	16:52:30	11.58	-0.03	10.86	11.99	0
run9	4/15/2009	16:52:45	11.58	-0.02	10.86	11.99	0
run9	4/15/2009	16:53:00	11.59	-0.02	10.86	11.99	0
run9	4/15/2009	16:53:15	11.58	-0.03	10.86	11.99	0
run9	4/15/2009	16:53:30	11.57	-0.03	10.86	11.99	0
run9	4/15/2009	16:53:45	11.56	-0.03	10.86	11.99	0
run9	4/15/2009	16:54:00	11.54	-0.03	10.86	11.99	0
run9	4/15/2009	16:54:15	11.52	-0.03	10.86	11.99	0
run9	4/15/2009	16:54:30	11.54	-0.02	10.86	11.99	0
run9	4/15/2009	16:54:45	11.58	-0.03	10.86	11.99	0
run9	4/15/2009	16:55:00	11.59	-0.02	10.86	11.99	0
run9	4/15/2009	16:55:15	11.58	-0.03	10.86	11.99	0
run9	4/15/2009	16:55:30	11.56	-0.03	10.86	11.99	0

run9	4/15/2009	16:55:45	11.55	-0.03	10.86	11.99	0
run9	4/15/2009	16:56:00	11.52	-0.03	10.86	11.99	0
run9	4/15/2009	16:56:15	11.5	-0.02	10.86	11.99	0
run9	4/15/2009	16:56:30	11.54	-0.02	10.86	11.99	0
run9	4/15/2009	16:56:45	11.56	-0.03	10.86	11.99	0
run9	4/15/2009	16:57:00	11.56	-0.03	10.86	11.99	0
run9	4/15/2009	16:57:15	11.58	-0.03	10.86	11.99	0
run9	4/15/2009	16:57:30	11.59	-0.03	10.86	11.99	0
run9	4/15/2009	16:57:45	11.59	-0.02	10.86	11.99	0
run9	4/15/2009	16:58:00	11.58	-0.03	10.86	11.99	0
run9	4/15/2009	16:58:15	11.58	-0.03	10.86	11.99	0
run9	4/15/2009	16:58:30	11.57	-0.03	10.86	11.99	0
run9	4/15/2009	16:58:45	11.55	-0.02	10.86	11.99	0
run9	4/15/2009	16:59:00	11.54	-0.02	10.86	11.99	0
run9	4/15/2009	16:59:15	11.55	-0.03	10.86	11.99	0
run9	4/15/2009	16:59:30	11.54	-0.03	10.86	11.99	0
run9	4/15/2009	16:59:45	11.53	-0.03	10.86	11.99	0
run9	4/15/2009	17:00:00	11.51	-0.02	10.86	11.99	0
run9	4/15/2009	17:00:15	11.49	-0.03	10.86	11.99	0
run9	4/15/2009	17:00:30	11.5	-0.02	10.86	11.99	0
run9	4/15/2009	17:00:45	11.51	-0.03	10.86	11.99	0
run9	4/15/2009	17:01:00	11.52	-0.03	10.86	11.99	0
run9	4/15/2009	17:01:15	11.53	-0.03	10.86	11.99	0.01
run9	4/15/2009	17:01:30	11.55	-0.03	10.86	11.99	0
run9	4/15/2009	17:01:45	11.54	-0.02	10.86	11.99	0
run9	4/15/2009	17:02:00	11.53	-0.03	10.86	11.99	0
run9	4/15/2009	17:02:15	11.54	-0.03	10.86	11.99	0
run9	4/15/2009	17:02:30	11.55	-0.03	10.86	11.99	0
run9	4/15/2009	17:02:45	11.58	-0.03	10.86	11.99	0
run9	4/15/2009	17:03:00	11.59	-0.02	10.86	11.99	0
run9	4/15/2009	17:03:15	11.6	-0.03	10.86	11.99	0
run9	4/15/2009	17:03:30	11.6	-0.02	10.86	11.99	0
run9	4/15/2009	17:03:45	11.59	-0.02	10.86	11.99	0
run9	4/15/2009	17:04:00	11.59	-0.02	10.86	11.99	0
run9	4/15/2009	17:04:15	11.6	-0.02	10.86	11.99	0
run9	4/15/2009	17:04:30	11.62	-0.03	10.86	11.99	0.01
run9	4/15/2009	17:04:45	11.67	-0.03	10.86	11.99	0
run9	4/15/2009	17:05:00	11.7	-0.03	10.86	11.99	0
run9	4/15/2009	17:05:15	11.71	-0.03	10.86	11.99	0
run9	4/15/2009	17:05:30	11.71	-0.02	10.86	11.99	0
run9	4/15/2009	17:05:45	11.72	-0.02	10.86	11.99	0
run9	4/15/2009	17:06:00	11.72	-0.03	10.86	11.99	0
run9	4/15/2009	17:06:15	11.71	-0.02	10.86	11.99	0
run9	4/15/2009	17:06:30	11.7	-0.02	10.86	11.99	0
run9	4/15/2009	17:06:45	11.7	-0.02	10.86	11.99	0
run9	4/15/2009	17:07:00	11.71	-0.03	10.86	11.99	0
run9	4/15/2009	17:07:15	11.73	-0.03	10.86	11.99	0.01
run9	4/15/2009	17:07:30	11.74	-0.03	10.86	11.99	0
run9	4/15/2009	17:07:45	11.75	-0.03	10.86	11.99	0
run9	4/15/2009	17:08:00	11.74	-0.03	10.86	11.99	0
run9	4/15/2009	17:08:15	11.72	-0.02	10.86	11.99	0

run9	4/15/2009	17:08:30	11.69	-0.03	10.86	11.99	0
run9	4/15/2009	17:08:45	11.68	-0.03	10.86	11.99	0
run9	4/15/2009	17:09:00	11.7	-0.03	10.86	11.99	0.01
run9	4/15/2009	17:09:15	11.72	-0.03	10.86	11.99	0
run9	4/15/2009	17:09:30	11.71	-0.02	10.86	11.99	0
run9	4/15/2009	17:09:45	11.67	-0.03	10.86	11.99	0
run9	4/15/2009	17:10:00	11.64	-0.03	10.86	11.99	0.02
run9	4/15/2009	17:10:15	11.63	-0.03	10.86	11.99	0.02
run9	4/15/2009	17:10:30	11.66	-0.03	10.86	11.99	0.01
run9	4/15/2009	17:10:45	11.69	-0.02	10.86	11.99	0
run9	4/15/2009	17:11:00	11.71	-0.03	10.86	11.99	0
run9	4/15/2009	17:11:15	11.72	-0.03	10.86	11.99	0
run9	4/15/2009	17:11:30	11.72	-0.02	10.86	11.99	0
run9	4/15/2009	17:11:45	11.72	-0.03	10.86	11.99	0
run9	4/15/2009	17:12:00	11.71	-0.03	10.86	11.99	0
run9	4/15/2009	17:12:15	11.69	-0.03	10.86	11.99	0
run9	4/15/2009	17:12:30	11.69	-0.03	10.86	11.99	0
run9	4/15/2009	17:12:45	11.71	-0.03	10.86	11.99	0
run9	4/15/2009	17:13:00	11.72	-0.03	10.86	11.99	0
run9	4/15/2009	17:13:15	11.73	-0.02	10.86	11.99	0.01
run9	4/15/2009	17:13:30	11.75	-0.02	10.86	11.99	0
run9	4/15/2009	17:13:45	11.78	-0.03	10.86	11.99	0
run9	4/15/2009	17:14:00	11.8	-0.02	10.86	11.99	0
run9	4/15/2009	17:14:15	11.8	-0.03	10.86	11.99	0
run9	4/15/2009	17:14:30	11.78	-0.02	10.86	11.99	0
run9	4/15/2009	17:14:45	11.78	-0.02	10.86	11.99	0
run9	4/15/2009	17:15:00	11.8	-0.03	10.86	11.99	0
run9	4/15/2009	17:15:15	11.81	-0.02	10.86	11.99	0
run9	4/15/2009	17:15:30	11.8	-0.02	10.86	11.99	0
run9	4/15/2009	17:15:45	11.8	-0.03	10.86	11.99	0
run9	4/15/2009	17:16:00	11.8	-0.02	10.86	11.99	0
run9	4/15/2009	17:16:15	11.81	-0.03	10.86	11.99	0
run9	4/15/2009	17:16:30	11.82	-0.02	10.86	11.99	0
run9	4/15/2009	17:16:45	11.81	-0.03	10.86	11.99	0
run9	4/15/2009	17:17:00	11.82	-0.03	10.86	11.99	0.01
run9	4/15/2009	17:17:15	11.82	-0.02	10.86	11.99	0.01
run9	4/15/2009	17:17:30	11.82	-0.03	10.86	11.99	0.01
run9	4/15/2009	17:17:45	11.83	-0.03	10.86	11.99	0.01
run9	4/15/2009	17:18:00	11.83	-0.03	10.86	11.99	0.01
run9	4/15/2009	17:18:15	11.82	-0.03	10.86	11.99	0
run9	4/15/2009	17:18:30	11.8	-0.02	10.86	11.99	0
run9	4/15/2009	17:18:45	11.79	-0.02	10.86	11.99	0
run9	4/15/2009	17:19:00	11.81	-0.03	10.86	11.99	0
run9	4/15/2009	17:19:15	11.82	-0.02	10.86	11.99	0.01
run9	4/15/2009	17:19:30	11.84	-0.03	10.86	11.99	0
run9	4/15/2009	17:19:45	11.86	-0.02	10.86	11.99	0
run9	4/15/2009	17:20:00	11.87	-0.02	10.86	11.99	0
run9	4/15/2009	17:20:15	11.87	-0.02	10.86	11.99	0
run9	4/15/2009	17:20:30	11.87	-0.02	10.86	11.99	0
run9	4/15/2009	17:20:45	11.88	-0.04	10.86	11.99	0
run9	4/15/2009	17:21:00	11.92	-0.03	10.86	11.99	0

run9	4/15/2009	17:21:15	11.77	-0.03	10.86	11.99	0
run9	4/15/2009	17:21:30	11.2	-0.03	10.86	11.99	0
run9	4/15/2009	17:21:45	11.19	-0.02	10.86	11.99	0
run9	4/15/2009	17:22:00	11.16	-0.03	10.86	12.89	0
run9	4/15/2009	17:22:15	11.14	-0.03	10.86	12.89	0
run9	4/15/2009	17:22:30	11.14	-0.03	10.86	12.89	0
run9	4/15/2009	17:22:45	11.14	-0.03	10.86	12.89	0
run9	4/15/2009	17:23:00	11.15	-0.02	10.86	12.89	0
run9	4/15/2009	17:23:15	11.15	-0.03	10.86	12.89	0
run9	4/15/2009	17:23:30	11.14	-0.03	10.86	12.89	0
run9	4/15/2009	17:23:45	11.13	-0.02	10.86	12.89	0
run9	4/15/2009	17:24:00	11.13	-0.03	10.86	12.89	0
run9	4/15/2009	17:24:15	11.12	-0.02	10.86	12.89	0
run9	4/15/2009	17:24:30	11.13	-0.03	10.86	12.89	0
run9	4/15/2009	17:24:45	11.16	-0.04	10.86	12.89	0
run9	4/15/2009	17:25:00	11.17	-0.02	10.86	12.89	0
run9	4/15/2009	17:25:15	11.16	-0.03	10.86	12.89	0
run9	4/15/2009	17:25:30	11.14	-0.02	10.86	12.89	0
run9	4/15/2009	17:25:45	11.13	-0.03	10.86	12.89	0
run9	4/15/2009	17:26:00	11.13	-0.03	10.86	12.89	0
run9	4/15/2009	17:26:15	11.15	-0.02	10.86	12.89	0
run9	4/15/2009	17:26:30	11.18	-0.03	10.86	12.89	0
run9	4/15/2009	17:26:45	11.2	-0.03	10.86	12.89	0
run9	4/15/2009	17:27:00	11.17	-0.02	10.86	12.89	0
run9	4/15/2009	17:27:15	11.15	-0.03	10.86	12.89	0
run9	4/15/2009	17:27:30	11.17	-0.03	10.86	12.89	0
run9	4/15/2009	17:27:45	11.18	-0.03	10.86	12.89	0
run9	4/15/2009	17:28:00	11.18	-0.03	10.86	12.89	0
run9	4/15/2009	17:28:15	11.17	-0.02	10.86	12.89	0
run9	4/15/2009	17:28:30	11.15	-0.03	10.86	12.89	0
run9	4/15/2009	17:28:45	11.14	-0.03	10.86	12.89	0
run9	4/15/2009	17:29:00	11.15	-0.03	10.86	12.89	0
run9	4/15/2009	17:29:15	11.14	-0.03	10.86	12.89	0
run9	4/15/2009	17:29:30	11.13	-0.02	10.86	12.89	0
run9	4/15/2009	17:29:45	11.14	-0.03	10.86	12.89	0
run9	4/15/2009	17:30:00	11.15	-0.03	10.86	12.89	0
run9	4/15/2009	17:30:15	11.16	-0.03	10.86	12.89	0
run9	4/15/2009	17:30:30	11.15	-0.03	10.86	12.89	0
run9	4/15/2009	17:30:45	11.14	-0.02	10.86	12.89	0
run9	4/15/2009	17:31:00	11.13	-0.03	10.86	12.29	0
run9	4/15/2009	17:31:15	11.13	-0.03	10.86	12.29	0
run9	4/15/2009	17:31:30	11.13	-0.03	10.86	12.29	0
run9	4/15/2009	17:31:45	11.13	-0.03	10.86	12.29	0
run9	4/15/2009	17:32:00	11.13	-0.02	10.86	12.29	0
run9	4/15/2009	17:32:15	11.13	-0.03	10.86	12.29	0
run9	4/15/2009	17:32:30	11.14	-0.03	10.86	12.29	0
run9	4/15/2009	17:32:45	11.15	-0.03	10.86	12.29	0
run9	4/15/2009	17:33:00	11.15	-0.03	10.86	12.29	0
run9	4/15/2009	17:33:15	11.15	-0.03	10.86	12.29	0
run9	4/15/2009	17:33:30	11.16	-0.02	10.86	12.29	0
run9	4/15/2009	17:33:45	11.15	-0.03	10.86	12.29	0

run9	4/15/2009	17:34:00	11.15	-0.02	10.86	12.29	0	
run9	4/15/2009	17:34:15	11.16	-0.03	10.86	12.29	0	
run9	4/15/2009	17:34:30	11.16	-0.02	10.86	12.29	0	
run9	4/15/2009	17:34:45	11.17	-0.02	10.86	12.29	0	
run9	4/15/2009	17:35:00	11.17	-0.03	10.86	12.29	0	
run9	4/15/2009	17:35:15	11.18	-0.03	10.86	12.29	0	
run9	4/15/2009	17:35:30	11.18	-0.03	10.86	12.29	0	
run9	4/15/2009	17:35:45	11.18	-0.03	10.86	12.29	0	
run9	4/15/2009	17:36:00	11.18	-0.02	10.86	12.29	0	
run9	4/15/2009	17:36:15	11.19	-0.03	10.86	12.29	0	
run9	4/15/2009	17:36:30	11.18	-0.02	10.86	12.29	0	
run9	4/15/2009	17:36:45	11.18	-0.03	10.86	12.29	0	
averun9	4/15/2009	16:37:00	11.54	-0.03	10.86	12.29	0	60
scg6	4/15/2009	17:37:15	11.17	-0.02	6.65	12.89	0	ALM05992
scg6	4/15/2009	17:37:30	11.16	-0.03	7.25	12.96	0	ALM05992
scg6	4/15/2009	17:37:45	11.06	-0.02	7.35	12.84	0	ALM05992
scg6	4/15/2009	17:38:00	9	-0.03	6.82	11.77	0	ALM05992
scg6	4/15/2009	17:38:15	5.01	-0.03	7.51	8.46	0.01	ALM05992
scg6	4/15/2009	17:38:30	2.52	-0.02	14.3	4.76	0.01	ALM05992
scg6	4/15/2009	17:38:45	1.45	-0.03	31.3	2.71	0	ALM05992
scg6	4/15/2009	17:39:00	0.98	-0.03	51.69	2.03	0	ALM05992
scg6	4/15/2009	17:39:15	0.72	-0.03	66.24	1.86	0	ALM05992
scg6	4/15/2009	17:39:30	0.57	-0.03	75.27	1.71	0	ALM05992
scg6	4/15/2009	17:39:45	0.48	-0.02	80.83	1.61	0	ALM05992
scg6	4/15/2009	17:40:00	0.42	-0.03	83.89	1.61	0	ALM05992
scg6	4/15/2009	17:40:15	0.39	-0.03	84.95	1.54	0	ALM05992
scg6	4/15/2009	17:40:30	0.34	-0.02	77.41	1.5	0	ALM05992
scg6	4/15/2009	17:40:45	0.3	-0.04	45.23	1.42	0	ALM05992
scg6	4/15/2009	17:41:00	0.28	-0.03	45.19	1.42	0	ALM05992
scg6	4/15/2009	17:41:15	0.26	-0.03	45.16	1.42	0	ALM05992
scg6	4/15/2009	17:41:30	0.24	-0.03	44.21	1.42	0	ALM05992
o2zero1	4/15/2009	17:41:00	0.28	-0.03	44.21	1.42	0	ALM05992
so2span1	4/15/2009	17:41:30	0.24	-0.03	44.21	1.42	0	ALM05992
scg9	4/15/2009	17:41:45	0.21	-0.02	44.21	1.36	0	ALM00690
scg9	4/15/2009	17:42:00	0.19	-0.03	44.25	1.32	0	ALM00690
scg9	4/15/2009	17:42:15	0.18	-0.03	44.29	1.32	0	ALM00690
scg9	4/15/2009	17:42:30	0.16	-0.02	44.2	1.32	0	ALM00690
scg9	4/15/2009	17:42:45	0.71	-0.03	40	1.27	0	ALM00690
scg9	4/15/2009	17:43:00	3.74	-0.03	39.21	1.1	0.01	ALM00690
scg9	4/15/2009	17:43:15	7.1	-0.03	32.01	0.92	0	ALM00690
scg9	4/15/2009	17:43:30	9.04	-0.02	27.57	0.82	0.01	ALM00690
scg9	4/15/2009	17:43:45	10.12	-0.02	23.74	0.76	0	ALM00690
scg9	4/15/2009	17:44:00	11.74	-0.03	15.81	0.71	0	ALM00690
scg9	4/15/2009	17:44:15	12.03	-0.02	10.24	0.71	0	ALM00690
scg9	4/15/2009	17:44:30	12.16	-0.03	7.22	0.72	0	ALM00690
scg9	4/15/2009	17:44:45	12.04	-0.03	5.01	0.71	0	ALM00690
scg9	4/15/2009	17:45:00	11.92	-0.02	3.37	0.71	0	ALM00690
scg9	4/15/2009	17:45:15	11.94	-0.03	2.5	0.71	0.01	ALM00690
scg9	4/15/2009	17:45:30	11.96	-0.02	2.34	0.72	0.01	ALM00690
scg9	4/15/2009	17:45:45	11.97	-0.03	2.04	0.72	0.01	ALM00690
scg9	4/15/2009	17:46:00	11.98	-0.03	1.63	0.72	0	ALM00690

scg9	4/15/2009	17:46:15	11.99	-0.02	0.33	0.71	0	ALM00690
scg9	4/15/2009	17:46:30	11.99	-0.03	0.04	0.71	0	ALM00690
scg9	4/15/2009	17:46:45	12	-0.02	0.03	0.71	0	ALM00690
so2zero1	4/15/2009	17:46:30	11.99	-0.03	0.04	0.71	0	ALM00690
o2span1	4/15/2009	17:45:45	11.97	-0.03	0.04	0.72	0.01	ALM00690

filename	4/16/2009	7:36:49 C:\RM\DATA\09-177C.csv				
testby1	Metco Environmental					
testby2	Baton Rouge LA					
testby3	M-43					
testby4	Daniel Moore					
testfor1	Valero					
testfor2	St. Charles Refinery					
testfor3	TOX #3 1600 TOX Stack (EQT 241)					
testfor4	Norco LA					
name			1 O2	4 SO2		
sn			106423			
offset			0	0		
fullscale			25	100		
train			1	1		
gastype			o2 3a	so2 6c		
dcg1	4/16/2009	7:37:15	20.76	0.5	ALM05283 N2	0
dcg1	4/16/2009	7:37:30	16.35	0.38	ALM05283 N2	0
dcg1	4/16/2009	7:37:45	5.29	0.5	ALM05283 N2	0
dcg1	4/16/2009	7:38:00	1.84	0.59	ALM05283 N2	0
dcg1	4/16/2009	7:38:15	0.8	0.91	ALM05283 N2	0
dcg1	4/16/2009	7:38:30	0.4	0.59	ALM05283 N2	0
dcg1	4/16/2009	7:38:45	0.24	0.55	ALM05283 N2	0
dcg1	4/16/2009	7:39:00	0.14	0.62	ALM05283 N2	0
dcg1	4/16/2009	7:39:15	0.11	0.09	ALM05283 N2	0
dcg1	4/16/2009	7:39:30	0.1	0.31	ALM05283 N2	0
dcg1	4/16/2009	7:39:45	0.09	0.31	ALM05283 N2	0
o2ezero1	4/16/2009	7:39:30	0.1	0.31	ALM05283 N2	0
so2ezero1	4/16/2009	7:39:45	0.09	0.31	ALM05283 N2	0
dcg11	4/16/2009	7:40:15	1.48	0.44	AAL20005/ O2	20.9
dcg11	4/16/2009	7:40:30	10.73	0.74	AAL20005/ O2	20.9
dcg11	4/16/2009	7:40:45	15.95	0.82	AAL20005/ O2	20.9
dcg11	4/16/2009	7:41:00	20.81	0.88	AAL20005/ O2	20.9
dcg11	4/16/2009	7:41:15	20.97	0.46	AAL20005/ O2	20.9
dcg11	4/16/2009	7:41:30	21.04	0.19	AAL20005/ O2	20.9
dcg11	4/16/2009	7:41:45	21.13	0.09	AAL20005/ O2	20.9
o2high1	4/16/2009	7:41:30	21.04	0.19	AAL20005/ O2	20.9
dcg9	4/16/2009	7:42:00	21.17	-0.02	ALM00690 O2	11.8
dcg9	4/16/2009	7:42:15	19.89	-0.22	ALM00690 O2	11.8
dcg9	4/16/2009	7:42:30	14.74	0.02	ALM00690 O2	11.8
dcg9	4/16/2009	7:42:45	12.9	-0.76	ALM00690 O2	11.8
dcg9	4/16/2009	7:43:00	12.25	-1.01	ALM00690 O2	11.8
dcg9	4/16/2009	7:43:15	11.76	-0.58	ALM00690 O2	11.8
dcg9	4/16/2009	7:43:30	11.76	-0.17	ALM00690 O2	11.8
dcg9	4/16/2009	7:43:45	11.98	0.08	ALM00690 O2	11.8
dcg9	4/16/2009	7:44:00	11.63	0.07	ALM00690 O2	11.8
dcg9	4/16/2009	7:44:15	11.69	0.65	ALM00690 O2	11.8
dcg9	4/16/2009	7:44:30	11.62	1.06	ALM00690 O2	11.8
o2mid1	4/16/2009	7:44:15	11.69	0.65	ALM00690 O2	11.8 ALM6904
dcg8	4/16/2009	7:45:00	11.04	2.75	BLM00508 SO2	93.8
dcg8	4/16/2009	7:45:15	4.6	4.19	BLM00508 SO2	93.8
dcg8	4/16/2009	7:45:30	1.44	23.73	BLM00508 SO2	93.8

dcg8	4/16/2009	7:45:45	0.57	57.7	BLM00508 SO2	93.8	
dcg8	4/16/2009	7:46:00	0.27	86.22	BLM00508 SO2	93.8	
dcg8	4/16/2009	7:46:15	0.15	96.49	BLM00508 SO2	93.8	
dcg8	4/16/2009	7:46:30	0.1	96.1	BLM00508 SO2	93.8	
dcg8	4/16/2009	7:46:45	0.07	95.94	BLM00508 SO2	93.8	
dcg8	4/16/2009	7:47:00	0.06	94.99	BLM00508 SO2	93.8	
dcg8	4/16/2009	7:47:15	0.05	94.71	BLM00508 SO2	93.8	
dcg8	4/16/2009	7:47:30	0.04	94.56	BLM00508 SO2	93.8	
dcg8	4/16/2009	7:47:45	0.04	94.38	BLM00508 SO2	93.8	
dcg8	4/16/2009	7:48:00	0.04	94.55	BLM00508 SO2	93.8	
dcg8	4/16/2009	7:48:15	0.03	94.78	BLM00508 SO2	93.8	
dcg8	4/16/2009	7:48:30	0.03	95.11	BLM00508 SO2	93.8	
so2high1	4/16/2009	7:48:15	0.03	94.78	BLM00508 SO2	93.8	ALM 5088
dcg6	4/16/2009	7:48:45	0.03	95.35	ALM05992 SO2	44.35	
dcg6	4/16/2009	7:49:00	1.3	95.61	ALM05992 SO2	44.35	
dcg6	4/16/2009	7:49:15	0.78	94.83	ALM05992 SO2	44.35	
dcg6	4/16/2009	7:49:30	0.24	81.47	ALM05992 SO2	44.35	
dcg6	4/16/2009	7:49:45	0.1	58.19	ALM05992 SO2	44.35	
dcg6	4/16/2009	7:50:00	0.05	47.74	ALM05992 SO2	44.35	
dcg6	4/16/2009	7:50:15	0.03	45.26	ALM05992 SO2	44.35	
dcg6	4/16/2009	7:50:30	0.03	44.69	ALM05992 SO2	44.35	
dcg6	4/16/2009	7:50:45	0.02	44.76	ALM05992 SO2	44.35	
dcg6	4/16/2009	7:51:00	0.02	44.75	ALM05992 SO2	44.35	
dcg6	4/16/2009	7:51:15	0.02	44.48	ALM05992 SO2	44.35	
so2mid1	4/16/2009	7:51:15	0.02	44.48	ALM05992 SO2	44.35	ALM59290
scg6	4/16/2009	7:52:00	17.22	42.55	ALM05992 SO2	44.35	
scg6	4/16/2009	7:52:15	19.65	28.67	ALM05992 SO2	44.35	
scg6	4/16/2009	7:52:30	19.42	11.6	ALM05992 SO2	44.35	
scg6	4/16/2009	7:52:45	15.89	3.73	ALM05992 SO2	44.35	
scg6	4/16/2009	7:53:00	13.21	1.53	ALM05992 SO2	44.35	
scg6	4/16/2009	7:53:15	8.94	1.15	ALM05992 SO2	44.35	
scg6	4/16/2009	7:53:30	4.6	2.62	ALM05992 SO2	44.35	
scg6	4/16/2009	7:53:45	2.38	10.78	ALM05992 SO2	44.35	
scg6	4/16/2009	7:54:00	1.41	22.88	ALM05992 SO2	44.35	
scg6	4/16/2009	7:54:15	0.97	32.29	ALM05992 SO2	44.35	
scg6	4/16/2009	7:54:30	0.74	36.97	ALM05992 SO2	44.35	
scg6	4/16/2009	7:54:45	0.4	39.18	ALM05992 SO2	44.35	
scg6	4/16/2009	7:55:00	0.33	40.14	ALM05992 SO2	44.35	
scg6	4/16/2009	7:55:15	0.27	40.67	ALM05992 SO2	44.35	
scg6	4/16/2009	7:55:30	0.23	40.92	ALM05992 SO2	44.35	
scg6	4/16/2009	7:55:45	0.2	41.33	ALM05992 SO2	44.35	
scg6	4/16/2009	7:56:00	0.21	42.59	ALM05992 SO2	44.35	
scg6	4/16/2009	7:56:15	0.19	43.82	ALM05992 SO2	44.35	
scg6	4/16/2009	7:56:30	0.14	41.79	ALM05992 SO2	44.35	
o2zero1	4/16/2009	7:56:00	0.21	42.59	ALM05992 SO2	44.35	
so2span1	4/16/2009	7:56:15	0.19	43.82	~~ALM05992~~ SO2	44.35	ALM59290
scg9	4/16/2009	7:56:45	0.11	39.95	ALM00690 O2	11.8	
scg9	4/16/2009	7:57:00	0.1	39.59	ALM00690 O2	11.8	
scg9	4/16/2009	7:57:15	0.09	40.58	ALM00690 O2	11.8	
scg9	4/16/2009	7:57:30	0.09	41.71	ALM00690 O2	11.8	
scg9	4/16/2009	7:57:45	0.21	42.29	ALM00690 O2	11.8	

scg9	4/16/2009	7:58:00	1.73	42.38	ALM00690 O2	11.8
scg9	4/16/2009	7:58:15	4.44	41.92	ALM00690 O2	11.8
scg9	4/16/2009	7:58:30	6.44	35.99	ALM00690 O2	11.8
scg9	4/16/2009	7:58:45	8.88	25.26	ALM00690 O2	11.8
scg9	4/16/2009	7:59:00	12.01	15.74	ALM00690 O2	11.8
scg9	4/16/2009	7:59:15	11.91	9.26	ALM00690 O2	11.8
scg9	4/16/2009	7:59:30	11.64	5.78	ALM00690 O2	11.8
scg9	4/16/2009	7:59:45	11.94	3.97	ALM00690 O2	11.8
scg9	4/16/2009	8:00:00	11.95	2.98	ALM00690 O2	11.8
scg9	4/16/2009	8:00:15	11.97	2.22	ALM00690 O2	11.8
scg9	4/16/2009	8:00:30	11.99	1.36	ALM00690 O2	11.8
scg9	4/16/2009	8:00:45	11.99	0.71	ALM00690 O2	11.8
scg9	4/16/2009	8:01:00	12	0.54	ALM00690 O2	11.8
scg9	4/16/2009	8:01:15	12.01	0.57	ALM00690 O2	11.8
scg9	4/16/2009	8:01:30	12.01	0.74	ALM00690 O2	11.8
so2zero1	4/16/2009	8:01:00	12	0.54	ALM00690 O2	11.8
o2span1	4/16/2009	8:00:15	11.97	2.22	ALM00690 O2	11.8
run10	4/16/2009	8:05:15	11.63	3.08		
run10	4/16/2009	8:05:30	11.64	3.55		
run10	4/16/2009	8:05:45	11.63	3.44		
run10	4/16/2009	8:06:00	11.62	3.7		
run10	4/16/2009	8:06:15	11.63	3.98		
run10	4/16/2009	8:06:30	11.63	4.37		
run10	4/16/2009	8:06:45	11.63	4.41		
run10	4/16/2009	8:07:00	11.64	4.53		
run10	4/16/2009	8:07:15	11.62	4.14		
run10	4/16/2009	8:07:30	11.62	4.23		
run10	4/16/2009	8:07:45	11.64	6.99		
run10	4/16/2009	8:08:00	11.64	7.74		
run10	4/16/2009	8:08:15	11.66	7.8		
run10	4/16/2009	8:08:30	11.67	8		
run10	4/16/2009	8:08:45	11.69	8.1		
run10	4/16/2009	8:09:00	11.7	8.2		
run10	4/16/2009	8:09:15	11.69	8.3		
run10	4/16/2009	8:09:30	11.65	8.3		
run10	4/16/2009	8:09:45	11.63	8.2		
run10	4/16/2009	8:10:00	11.61	8.3		
run10	4/16/2009	8:10:15	11.61	8.3		
run10	4/16/2009	8:10:30	11.63	8.32		
run10	4/16/2009	8:10:45	11.65	8.31		
run10	4/16/2009	8:11:00	11.64	8.32		
run10	4/16/2009	8:11:15	11.65	8.32		
run10	4/16/2009	8:11:30	11.68	8.21		
run10	4/16/2009	8:11:45	11.68	8.34		
run10	4/16/2009	8:12:00	11.68	8.34		
run10	4/16/2009	8:12:15	11.7	8.34		
run10	4/16/2009	8:12:30	11.71	8.34		
run10	4/16/2009	8:12:45	11.73	8.34		
run10	4/16/2009	8:13:00	11.74	8.34		
run10	4/16/2009	8:13:15	11.75	8.34		
run10	4/16/2009	8:13:30	11.74	8.34		

run10	4/16/2009	8:13:45	11.72	8.34
run10	4/16/2009	8:14:00	11.73	8.34
run10	4/16/2009	8:14:15	11.75	8.34
run10	4/16/2009	8:14:30	11.77	8.34
run10	4/16/2009	8:14:45	11.79	8.34
run10	4/16/2009	8:15:00	11.8	8.34
run10	4/16/2009	8:15:15	11.8	8.34
run10	4/16/2009	8:15:30	11.79	8.34
run10	4/16/2009	8:15:45	11.8	8.34
run10	4/16/2009	8:16:00	11.81	8.34
run10	4/16/2009	8:16:15	11.81	8.34
run10	4/16/2009	8:16:30	11.8	8.34
run10	4/16/2009	8:16:45	11.79	8.34
run10	4/16/2009	8:17:00	11.78	8.34
run10	4/16/2009	8:17:15	11.79	8.34
run10	4/16/2009	8:17:30	11.76	8.34
run10	4/16/2009	8:17:45	11.74	8.34
run10	4/16/2009	8:18:00	11.72	8.34
run10	4/16/2009	8:18:15	11.72	8.34
run10	4/16/2009	8:18:30	11.75	8.34
run10	4/16/2009	8:18:45	11.76	8.34
run10	4/16/2009	8:19:00	11.76	8.34
run10	4/16/2009	8:19:15	11.78	8.34
run10	4/16/2009	8:19:30	11.78	8.34
run10	4/16/2009	8:19:45	11.74	8.34
run10	4/16/2009	8:20:00	11.72	8.34
run10	4/16/2009	8:20:15	11.68	8.34
run10	4/16/2009	8:20:30	11.64	8.34
run10	4/16/2009	8:20:45	11.65	8.34
run10	4/16/2009	8:21:00	11.68	8.34
run10	4/16/2009	8:21:15	11.72	8.34
run10	4/16/2009	8:21:30	11.73	8.34
run10	4/16/2009	8:21:45	11.71	8.34
run10	4/16/2009	8:22:00	11.7	8.34
run10	4/16/2009	8:22:15	11.69	8.34
run10	4/16/2009	8:22:30	11.68	8.34
run10	4/16/2009	8:22:45	11.7	8.34
run10	4/16/2009	8:23:00	11.71	8.34
run10	4/16/2009	8:23:15	11.73	8.34
run10	4/16/2009	8:23:30	11.75	8.34
run10	4/16/2009	8:23:45	11.75	8.34
run10	4/16/2009	8:24:00	11.73	8.34
run10	4/16/2009	8:24:15	11.71	8.34
run10	4/16/2009	8:24:30	11.7	8.34
run10	4/16/2009	8:24:45	11.7	8.34
run10	4/16/2009	8:25:00	11.71	8.34
run10	4/16/2009	8:25:15	11.71	8.34
run10	4/16/2009	8:25:30	11.72	8.34
run10	4/16/2009	8:25:45	11.72	8.34
run10	4/16/2009	8:26:00	11.7	8.34
run10	4/16/2009	8:26:15	11.69	8.34

run10	4/16/2009	8:26:30	11.68	8.34
run10	4/16/2009	8:26:45	11.67	8.34
run10	4/16/2009	8:27:00	11.68	8.34
run10	4/16/2009	8:27:15	11.69	8.34
run10	4/16/2009	8:27:30	11.67	8.34
run10	4/16/2009	8:27:45	11.65	8.34
run10	4/16/2009	8:28:00	11.64	8.34
run10	4/16/2009	8:28:15	11.66	8.34
run10	4/16/2009	8:28:30	11.68	8.34
run10	4/16/2009	8:28:45	11.69	8.34
run10	4/16/2009	8:29:00	11.7	8.34
run10	4/16/2009	8:29:15	11.69	8.34
run10	4/16/2009	8:29:30	11.68	8.34
run10	4/16/2009	8:29:45	11.67	8.34
run10	4/16/2009	8:30:00	11.68	8.34
run10	4/16/2009	8:30:15	11.68	8.34
run10	4/16/2009	8:30:30	11.68	8.34
run10	4/16/2009	8:30:45	11.67	8.34
run10	4/16/2009	8:31:00	11.68	8.34
run10	4/16/2009	8:31:15	11.68	8.34
run10	4/16/2009	8:31:30	11.67	8.34
run10	4/16/2009	8:31:45	11.67	8.34
run10	4/16/2009	8:32:00	11.67	8.34
run10	4/16/2009	8:32:15	11.67	8.34
run10	4/16/2009	8:32:30	11.65	8.34
run10	4/16/2009	8:32:45	11.63	8.34
run10	4/16/2009	8:33:00	11.63	8.34
run10	4/16/2009	8:33:15	11.64	8.34
run10	4/16/2009	8:33:30	11.65	8.34
run10	4/16/2009	8:33:45	11.66	8.34
run10	4/16/2009	8:34:00	11.66	8.34
run10	4/16/2009	8:34:15	11.66	8.34
run10	4/16/2009	8:34:30	11.63	8.34
run10	4/16/2009	8:34:45	11.59	8.34
run10	4/16/2009	8:35:00	11.58	8.34
run10	4/16/2009	8:35:15	11.6	8.34
run10	4/16/2009	8:35:30	11.66	8.34
run10	4/16/2009	8:35:45	11.69	8.34
run10	4/16/2009	8:36:00	11.69	8.34
run10	4/16/2009	8:36:15	11.67	8.34
run10	4/16/2009	8:36:30	11.65	8.34
run10	4/16/2009	8:36:45	11.66	8.34
run10	4/16/2009	8:37:00	11.68	8.34
run10	4/16/2009	8:37:15	11.65	8.34
run10	4/16/2009	8:37:30	11.63	8.34
run10	4/16/2009	8:37:45	11.64	8.34
run10	4/16/2009	8:38:00	11.66	8.34
run10	4/16/2009	8:38:15	11.66	8.34
run10	4/16/2009	8:38:30	11.65	8.34
run10	4/16/2009	8:38:45	11.64	8.34
run10	4/16/2009	8:39:00	11.65	8.34

run10	4/16/2009	8:39:15	11.67	8.34
run10	4/16/2009	8:39:30	11.67	8.34
run10	4/16/2009	8:39:45	11.68	8.34
run10	4/16/2009	8:40:00	11.67	8.34
run10	4/16/2009	8:40:15	11.63	8.34
run10	4/16/2009	8:40:30	11.6	8.34
run10	4/16/2009	8:40:45	11.59	8.34
run10	4/16/2009	8:41:00	11.61	8.34
run10	4/16/2009	8:41:15	11.63	8.34
run10	4/16/2009	8:41:30	11.65	8.34
run10	4/16/2009	8:41:45	11.63	8.34
run10	4/16/2009	8:42:00	11.64	8.34
run10	4/16/2009	8:42:15	11.63	8.34
run10	4/16/2009	8:42:30	11.58	8.34
run10	4/16/2009	8:42:45	11.58	8.34
run10	4/16/2009	8:43:00	11.61	8.34
run10	4/16/2009	8:43:15	11.62	8.34
run10	4/16/2009	8:43:30	11.64	8.34
run10	4/16/2009	8:43:45	11.65	8.34
run10	4/16/2009	8:44:00	11.64	8.34
run10	4/16/2009	8:44:15	11.63	8.34
run10	4/16/2009	8:44:30	11.63	8.34
run10	4/16/2009	8:44:45	11.62	8.34
run10	4/16/2009	8:45:00	11.61	8.34
run10	4/16/2009	8:45:15	11.61	8.34
run10	4/16/2009	8:45:30	11.59	8.34
run10	4/16/2009	8:45:45	11.57	8.34
run10	4/16/2009	8:46:00	11.57	8.34
run10	4/16/2009	8:46:15	11.56	8.34
run10	4/16/2009	8:46:30	11.56	8.34
run10	4/16/2009	8:46:45	11.58	8.34
run10	4/16/2009	8:47:00	11.61	8.34
run10	4/16/2009	8:47:15	11.63	8.34
run10	4/16/2009	8:47:30	11.6	8.34
run10	4/16/2009	8:47:45	11.58	8.34
run10	4/16/2009	8:48:00	11.56	8.34
run10	4/16/2009	8:48:15	11.56	8.34
run10	4/16/2009	8:48:30	11.57	8.34
run10	4/16/2009	8:48:45	11.58	8.34
run10	4/16/2009	8:49:00	11.57	8.34
run10	4/16/2009	8:49:15	11.57	8.34
run10	4/16/2009	8:49:30	11.57	8.34
run10	4/16/2009	8:49:45	11.57	8.34
run10	4/16/2009	8:50:00	11.57	8.34
run10	4/16/2009	8:50:15	11.57	8.34
run10	4/16/2009	8:50:30	11.55	8.34
run10	4/16/2009	8:50:45	11.56	8.34
run10	4/16/2009	8:51:00	11.59	8.34
run10	4/16/2009	8:51:15	11.61	8.35
run10	4/16/2009	8:51:30	11.62	8.35
run10	4/16/2009	8:51:45	11.61	8.35

run10	4/16/2009	8:52:00	11.59	8.35
run10	4/16/2009	8:52:15	11.57	8.35
run10	4/16/2009	8:52:30	11.56	8.35
run10	4/16/2009	8:52:45	11.57	8.35
run10	4/16/2009	8:53:00	11.57	8.35
run10	4/16/2009	8:53:15	11.56	8.35
run10	4/16/2009	8:53:30	11.57	8.35
run10	4/16/2009	8:53:45	11.6	8.35
run10	4/16/2009	8:54:00	11.62	8.34
run10	4/16/2009	8:54:15	11.64	8.34
run10	4/16/2009	8:54:30	11.64	8.35
run10	4/16/2009	8:54:45	11.65	8.34
run10	4/16/2009	8:55:00	11.65	8.34
run10	4/16/2009	8:55:15	11.64	8.35
run10	4/16/2009	8:55:30	11.62	8.35
run10	4/16/2009	8:55:45	11.6	8.35
run10	4/16/2009	8:56:00	11.59	8.35
run10	4/16/2009	8:56:15	11.6	8.35
run10	4/16/2009	8:56:30	11.64	8.35
run10	4/16/2009	8:56:45	11.64	8.34
run10	4/16/2009	8:57:00	11.6	8.34
run10	4/16/2009	8:57:15	11.59	8.34
run10	4/16/2009	8:57:30	11.6	8.34
run10	4/16/2009	8:57:45	11.61	8.34
run10	4/16/2009	8:58:00	11.61	8.34
run10	4/16/2009	8:58:15	11.61	8.34
run10	4/16/2009	8:58:30	11.59	8.34
run10	4/16/2009	8:58:45	11.57	8.34
run10	4/16/2009	8:59:00	11.57	8.34
run10	4/16/2009	8:59:15	11.59	8.34
run10	4/16/2009	8:59:30	11.58	8.35
run10	4/16/2009	8:59:45	11.56	8.35
run10	4/16/2009	9:00:00	11.55	8.35
run10	4/16/2009	9:00:15	11.54	8.35
run10	4/16/2009	9:00:30	11.55	8.35
run10	4/16/2009	9:00:45	11.58	8.35
run10	4/16/2009	9:01:00	11.6	8.35
run10	4/16/2009	9:01:15	11.62	9.35
run10	4/16/2009	9:01:30	11.62	8.35
run10	4/16/2009	9:01:45	11.62	8.35
run10	4/16/2009	9:02:00	11.62	8.34
run10	4/16/2009	9:02:15	11.61	8.34
run10	4/16/2009	9:02:30	11.61	8.34
run10	4/16/2009	9:02:45	11.6	8.34
run10	4/16/2009	9:03:00	11.6	8.34
run10	4/16/2009	9:03:15	11.63	8.34
run10	4/16/2009	9:03:30	11.67	8.34
run10	4/16/2009	9:03:45	11.7	8.34
run10	4/16/2009	9:04:00	11.71	8.34
run10	4/16/2009	9:04:15	11.71	8.34
run10	4/16/2009	9:04:30	11.7	8.34

run10	4/16/2009	9:04:45	11.7	8.34
run10	4/16/2009	9:05:00	11.7	8.34
run10	4/16/2009	9:05:15	11.7	8.34
run10	4/16/2009	9:05:30	11.71	8.34
run10	4/16/2009	9:05:45	11.69	8.34
run10	4/16/2009	9:06:00	11.67	8.34
run10	4/16/2009	9:06:15	11.68	8.34
run10	4/16/2009	9:06:30	11.69	8.34
run10	4/16/2009	9:06:45	11.7	8.34
run10	4/16/2009	9:07:00	11.7	8.34
run10	4/16/2009	9:07:15	11.68	8.34
run10	4/16/2009	9:07:30	11.65	8.34
run10	4/16/2009	9:07:45	11.62	8.34
run10	4/16/2009	9:08:00	11.64	8.34
run10	4/16/2009	9:08:15	11.66	8.34
run10	4/16/2009	9:08:30	11.66	8.34
run10	4/16/2009	9:08:45	11.65	8.35
run10	4/16/2009	9:09:00	11.63	8.34
run10	4/16/2009	9:09:15	11.63	8.34
run10	4/16/2009	9:09:30	11.62	8.35
run10	4/16/2009	9:09:45	11.58	8.34
run10	4/16/2009	9:10:00	11.55	8.34
run10	4/16/2009	9:10:15	11.57	8.34
run10	4/16/2009	9:10:30	11.61	8.34
run10	4/16/2009	9:10:45	11.64	8.32
run10	4/16/2009	9:11:00	11.65	8.34
run10	4/16/2009	9:11:15	11.62	8.34
run10	4/16/2009	9:11:30	11.61	8.35
run10	4/16/2009	9:11:45	11.63	8.34
run10	4/16/2009	9:12:00	11.64	8.32
run10	4/16/2009	9:12:15	11.64	8.34
run10	4/16/2009	9:12:30	11.62	8.36
run10	4/16/2009	9:12:45	11.62	8.34
run10	4/16/2009	9:13:00	11.62	8.36
run10	4/16/2009	9:13:15	11.63	8.34
run10	4/16/2009	9:13:30	11.64	8.34
run10	4/16/2009	9:13:45	11.64	8.35
run10	4/16/2009	9:14:00	11.63	8.34
run10	4/16/2009	9:14:15	11.63	8.35
run10	4/16/2009	9:14:30	11.63	8.34
run10	4/16/2009	9:14:45	11.61	8.34
run10	4/16/2009	9:15:00	11.6	8.35
run10	4/16/2009	9:15:15	11.59	8.34
run10	4/16/2009	9:15:30	11.59	8.35
run10	4/16/2009	9:15:45	11.58	8.34
run10	4/16/2009	9:16:00	11.56	8.34
run10	4/16/2009	9:16:15	11.52	8.35
run10	4/16/2009	9:16:30	11.5	8.34
run10	4/16/2009	9:16:45	11.51	8.34
run10	4/16/2009	9:17:00	11.55	8.36
run10	4/16/2009	9:17:15	11.58	8.34

run10	4/16/2009	9:17:30	11.59	8.36
run10	4/16/2009	9:17:45	11.59	8.36
run10	4/16/2009	9:18:00	11.59	8.34
run10	4/16/2009	9:18:15	11.61	8.36
run10	4/16/2009	9:18:30	11.61	8.36
run10	4/16/2009	9:18:45	11.62	8.34
run10	4/16/2009	9:19:00	11.62	8.34
run10	4/16/2009	9:19:15	11.62	8.34
run10	4/16/2009	9:19:30	11.59	8.34
run10	4/16/2009	9:19:45	11.55	8.34
run10	4/16/2009	9:20:00	11.55	8.34
run10	4/16/2009	9:20:15	11.55	8.34
run10	4/16/2009	9:20:30	11.55	8.34
run10	4/16/2009	9:20:45	11.54	8.34
run10	4/16/2009	9:21:00	11.54	8.34
run10	4/16/2009	9:21:15	11.54	8.35
run10	4/16/2009	9:21:30	11.56	8.35
run10	4/16/2009	9:21:45	11.57	8.35
run10	4/16/2009	9:22:00	11.57	8.34
run10	4/16/2009	9:22:15	11.57	8.34
run10	4/16/2009	9:22:30	11.56	8.34
run10	4/16/2009	9:22:45	11.54	8.35
run10	4/16/2009	9:23:00	11.54	8.34
run10	4/16/2009	9:23:15	11.54	8.34
run10	4/16/2009	9:23:30	11.53	8.35
run10	4/16/2009	9:23:45	11.54	8.34
run10	4/16/2009	9:24:00	11.55	8.34
run10	4/16/2009	9:24:15	11.53	8.35
run10	4/16/2009	9:24:30	11.51	8.34
run10	4/16/2009	9:24:45	11.5	8.34
run10	4/16/2009	9:25:00	11.5	8.34
run10	4/16/2009	9:25:15	11.5	8.35
run10	4/16/2009	9:25:30	11.51	8.34
run10	4/16/2009	9:25:45	11.53	8.34
run10	4/16/2009	9:26:00	11.54	8.35
run10	4/16/2009	9:26:15	11.51	8.34
run10	4/16/2009	9:26:30	11.5	8.34
run10	4/16/2009	9:26:45	11.52	8.34
run10	4/16/2009	9:27:00	11.55	8.34
run10	4/16/2009	9:27:15	11.57	8.34
run10	4/16/2009	9:27:30	11.58	8.34
run10	4/16/2009	9:27:45	11.57	8.34
run10	4/16/2009	9:28:00	11.56	8.34
run10	4/16/2009	9:28:15	11.55	8.34
run10	4/16/2009	9:28:30	11.53	8.34
run10	4/16/2009	9:28:45	11.53	8.34
run10	4/16/2009	9:29:00	11.5	8.34
run10	4/16/2009	9:29:15	11.49	8.34
run10	4/16/2009	9:29:30	11.51	8.34
run10	4/16/2009	9:29:45	11.54	8.34
run10	4/16/2009	9:30:00	11.56	8.34

run10	4/16/2009	9:30:15	11.56	8.34
run10	4/16/2009	9:30:30	11.55	8.34
run10	4/16/2009	9:30:45	11.55	8.34
run10	4/16/2009	9:31:00	11.56	8.34
run10	4/16/2009	9:31:15	11.57	8.34
run10	4/16/2009	9:31:30	11.56	8.34
run10	4/16/2009	9:31:45	11.56	8.34
run10	4/16/2009	9:32:00	11.54	8.34
run10	4/16/2009	9:32:15	11.54	8.34
run10	4/16/2009	9:32:30	11.56	8.34
run10	4/16/2009	9:32:45	11.59	8.34
run10	4/16/2009	9:33:00	11.6	8.34
run10	4/16/2009	9:33:15	11.58	8.34
run10	4/16/2009	9:33:30	11.56	8.34
run10	4/16/2009	9:33:45	11.55	8.34
run10	4/16/2009	9:34:00	11.54	8.34
run10	4/16/2009	9:34:15	11.52	8.34
run10	4/16/2009	9:34:30	11.51	8.34
run10	4/16/2009	9:34:45	11.51	8.34
run10	4/16/2009	9:35:00	11.51	8.34
run10	4/16/2009	9:35:15	11.52	8.35
run10	4/16/2009	9:35:30	11.53	8.35
run10	4/16/2009	9:35:45	11.55	8.35
run10	4/16/2009	9:36:00	11.57	8.34
run10	4/16/2009	9:36:15	11.59	8.34
run10	4/16/2009	9:36:30	11.61	8.35
run10	4/16/2009	9:36:45	11.62	8.34
run10	4/16/2009	9:37:00	11.6	8.35
run10	4/16/2009	9:37:15	11.56	8.34
run10	4/16/2009	9:37:30	11.52	8.34
run10	4/16/2009	9:37:45	11.52	8.35
run10	4/16/2009	9:38:00	11.56	8.35
run10	4/16/2009	9:38:15	11.59	8.34
run10	4/16/2009	9:38:30	11.62	8.35
run10	4/16/2009	9:38:45	11.64	8.34
run10	4/16/2009	9:39:00	11.65	8.35
run10	4/16/2009	9:39:15	11.67	8.34
run10	4/16/2009	9:39:30	11.65	8.34
run10	4/16/2009	9:39:45	11.65	8.35
run10	4/16/2009	9:40:00	11.62	8.34
run10	4/16/2009	9:40:15	11.61	8.34
run10	4/16/2009	9:40:30	11.62	8.35
run10	4/16/2009	9:40:45	11.63	8.34
run10	4/16/2009	9:41:00	11.65	8.34
run10	4/16/2009	9:41:15	11.64	8.35
run10	4/16/2009	9:41:30	11.61	8.34
run10	4/16/2009	9:41:45	11.59	8.34
run10	4/16/2009	9:42:00	11.57	8.35
run10	4/16/2009	9:42:15	11.55	8.34
run10	4/16/2009	9:42:30	11.54	8.35
run10	4/16/2009	9:42:45	11.57	8.34

run10	4/16/2009	9:43:00	11.58	8.34			
run10	4/16/2009	9:43:15	11.57	8.35			
run10	4/16/2009	9:43:30	11.56	8.34			
run10	4/16/2009	9:43:45	11.57	8.35			
run10	4/16/2009	9:44:00	11.58	8.34			
run10	4/16/2009	9:44:15	11.58	8.34			
run10	4/16/2009	9:44:30	11.6	8.35			
run10	4/16/2009	9:44:45	11.61	8.35			
averun10	4/16/2009	8:45:00	11.59	8.35	60		
scg9	4/16/2009	9:45:15	11.6	3.11	ALM00690	O2	11.8
scg9	4/16/2009	9:45:30	11.6	3.36	ALM00690	O2	11.8
scg9	4/16/2009	9:45:45	11.57	3.39	ALM00690	O2	11.8
scg9	4/16/2009	9:46:00	11.57	3.33	ALM00690	O2	11.8
scg9	4/16/2009	9:46:15	11.72	3.29	ALM00690	O2	11.8
scg9	4/16/2009	9:46:30	11.85	3.02	ALM00690	O2	11.8
scg9	4/16/2009	9:46:45	11.9	2.01	ALM00690	O2	11.8
scg9	4/16/2009	9:47:00	11.91	1.29	ALM00690	O2	11.8
scg9	4/16/2009	9:47:15	11.91	0.8	ALM00690	O2	11.8
scg9	4/16/2009	9:47:30	11.92	0.13	ALM00690	O2	11.8
scg9	4/16/2009	9:47:45	11.92	0.12	ALM00690	O2	11.8
scg9	4/16/2009	9:48:00	11.92	0.14	ALM00690	O2	11.8
scg9	4/16/2009	9:48:15	11.92	0.28	ALM00690	O2	11.8
so2zero1	4/16/2009	9:48:00	11.92	0.14	ALM00690	O2	11.8
o2span1	4/16/2009	9:47:15	11.91	0.8	ALM00690	O2	11.8
scg6	4/16/2009	9:48:30	11.92	0.17	ALM05992	SO2	44.35
scg6	4/16/2009	9:48:45	11.92	0.23	ALM05992	SO2	44.35
scg6	4/16/2009	9:49:00	11.92	0.26	ALM05992	SO2	44.35
scg6	4/16/2009	9:49:15	11.91	0.61	ALM05992	SO2	44.35
scg6	4/16/2009	9:49:30	10.55	0.85	ALM05992	SO2	44.35
scg6	4/16/2009	9:49:45	6.54	0.62	ALM05992	SO2	44.35
scg6	4/16/2009	9:50:00	3.54	3.42	ALM05992	SO2	44.35
scg6	4/16/2009	9:50:15	2.02	11.17	ALM05992	SO2	44.35
scg6	4/16/2009	9:50:30	1.26	20.98	ALM05992	SO2	44.35
scg6	4/16/2009	9:50:45	0.89	29.92	ALM05992	SO2	44.35
scg6	4/16/2009	9:51:00	0.67	35.91	ALM05992	SO2	44.35
scg6	4/16/2009	9:51:15	0.4	39.24	ALM05992	SO2	44.35
scg6	4/16/2009	9:51:30	0.14	41.4	ALM05992	SO2	44.35
scg6	4/16/2009	9:51:45	0.11	42.78	ALM05992	SO2	44.35
scg6	4/16/2009	9:52:00	0.09	43.53	ALM05992	SO2	44.35
scg6	4/16/2009	9:52:15	0.07	43.49	ALM05992	SO2	44.35
scg6	4/16/2009	9:52:30	0.06	43.87	ALM05992	SO2	44.35
scg6	4/16/2009	9:52:45	0.06	44.17	ALM05992	SO2	44.35
scg6	4/16/2009	9:53:00	0.05	44.6	ALM05992	SO2	44.35
o2zero1	4/16/2009	9:52:30	0.06	43.87	ALM05992	SO2	44.35
so2span1	4/16/2009	9:53:00	0.05	44.6	ALM05992	SO2	44.35
run11	4/16/2009	9:57:45	11.58	9.73			
run11	4/16/2009	9:58:00	11.58	8.92			
run11	4/16/2009	9:58:15	11.58	8.21			
run11	4/16/2009	9:58:30	11.58	8.22			
run11	4/16/2009	9:58:45	11.56	8.22			
run11	4/16/2009	9:59:00	11.56	8.21			

run11	4/16/2009	9:59:15	11.56	8.21
run11	4/16/2009	9:59:30	11.59	8.21
run11	4/16/2009	9:59:45	11.6	8.23
run11	4/16/2009	10:00:00	11.6	8.21
run11	4/16/2009	10:00:15	11.59	8.22
run11	4/16/2009	10:00:30	11.58	8.22
run11	4/16/2009	10:00:45	11.57	8.21
run11	4/16/2009	10:01:00	11.59	8.21
run11	4/16/2009	10:01:15	11.61	8.21
run11	4/16/2009	10:01:30	11.6	8.23
run11	4/16/2009	10:01:45	11.59	8.21
run11	4/16/2009	10:02:00	11.59	8.21
run11	4/16/2009	10:02:15	11.61	8.22
run11	4/16/2009	10:02:30	11.61	8.21
run11	4/16/2009	10:02:45	11.58	8.21
run11	4/16/2009	10:03:00	11.53	8.22
run11	4/16/2009	10:03:15	11.51	8.21
run11	4/16/2009	10:03:30	11.54	8.21
run11	4/16/2009	10:03:45	11.57	8.23
run11	4/16/2009	10:04:00	11.6	8.21
run11	4/16/2009	10:04:15	11.61	8.22
run11	4/16/2009	10:04:30	11.59	8.21
run11	4/16/2009	10:04:45	11.6	8.21
run11	4/16/2009	10:05:00	11.62	8.24
run11	4/16/2009	10:05:15	11.64	8.21
run11	4/16/2009	10:05:30	11.64	8.22
run11	4/16/2009	10:05:45	11.65	8.21
run11	4/16/2009	10:06:00	11.65	8.21
run11	4/16/2009	10:06:15	11.65	8.22
run11	4/16/2009	10:06:30	11.65	8.22
run11	4/16/2009	10:06:45	11.65	8.23
run11	4/16/2009	10:07:00	11.65	8.21
run11	4/16/2009	10:07:15	11.6	8.21
run11	4/16/2009	10:07:30	11.58	8.24
run11	4/16/2009	10:07:45	11.6	8.21
run11	4/16/2009	10:08:00	11.65	8.22
run11	4/16/2009	10:08:15	11.67	8.21
run11	4/16/2009	10:08:30	11.65	8.21
run11	4/16/2009	10:08:45	11.63	8.25
run11	4/16/2009	10:09:00	11.64	8.21
run11	4/16/2009	10:09:15	11.66	8.21
run11	4/16/2009	10:09:30	11.67	8.21
run11	4/16/2009	10:09:45	11.64	8.22
run11	4/16/2009	10:10:00	11.6	8.21
run11	4/16/2009	10:10:15	11.58	8.21
run11	4/16/2009	10:10:30	11.6	8.23
run11	4/16/2009	10:10:45	11.63	8.21
run11	4/16/2009	10:11:00	11.63	8.22
run11	4/16/2009	10:11:15	11.61	8.21
run11	4/16/2009	10:11:30	11.62	8.21
run11	4/16/2009	10:11:45	11.61	8.23

run11	4/16/2009	10:12:00	11.61	8.21
run11	4/16/2009	10:12:15	11.61	8.21
run11	4/16/2009	10:12:30	11.58	8.24
run11	4/16/2009	10:12:45	11.57	8.21
run11	4/16/2009	10:13:00	11.57	8.21
run11	4/16/2009	10:13:15	11.57	8.22
run11	4/16/2009	10:13:30	11.55	8.21
run11	4/16/2009	10:13:45	11.53	8.22
run11	4/16/2009	10:14:00	11.53	8.21
run11	4/16/2009	10:14:15	11.52	8.21
run11	4/16/2009	10:14:30	11.52	8.21
run11	4/16/2009	10:14:45	11.56	8.21
run11	4/16/2009	10:15:00	11.6	8.21
run11	4/16/2009	10:15:15	11.61	8.21
run11	4/16/2009	10:15:30	11.59	8.21
run11	4/16/2009	10:15:45	11.57	8.22
run11	4/16/2009	10:16:00	11.56	8.22
run11	4/16/2009	10:16:15	11.57	8.21
run11	4/16/2009	10:16:30	11.59	8.21
run11	4/16/2009	10:16:45	11.58	8.21
run11	4/16/2009	10:17:00	11.58	8.22
run11	4/16/2009	10:17:15	11.59	8.21
run11	4/16/2009	10:17:30	11.59	8.21
run11	4/16/2009	10:17:45	11.6	8.21
run11	4/16/2009	10:18:00	11.61	8.22
run11	4/16/2009	10:18:15	11.61	8.21
run11	4/16/2009	10:18:30	11.62	8.21
run11	4/16/2009	10:18:45	11.65	8.21
run11	4/16/2009	10:19:00	11.65	8.21
run11	4/16/2009	10:19:15	11.65	8.23
run11	4/16/2009	10:19:30	11.66	8.21
run11	4/16/2009	10:19:45	11.66	8.21
run11	4/16/2009	10:20:00	11.63	8.21
run11	4/16/2009	10:20:15	11.6	8.21
run11	4/16/2009	10:20:30	11.62	8.21
run11	4/16/2009	10:20:45	11.63	8.21
run11	4/16/2009	10:21:00	11.64	8.21
run11	4/16/2009	10:21:15	11.63	8.21
run11	4/16/2009	10:21:30	11.64	8.21
run11	4/16/2009	10:21:45	11.65	8.21
run11	4/16/2009	10:22:00	11.66	8.21
run11	4/16/2009	10:22:15	11.65	8.21
run11	4/16/2009	10:22:30	11.65	8.21
run11	4/16/2009	10:22:45	11.65	8.21
run11	4/16/2009	10:23:00	11.65	8.21
run11	4/16/2009	10:23:15	11.66	8.21
run11	4/16/2009	10:23:30	11.66	8.21
run11	4/16/2009	10:23:45	11.65	8.21
run11	4/16/2009	10:24:00	11.66	8.21
run11	4/16/2009	10:24:15	11.64	8.21
run11	4/16/2009	10:24:30	11.61	8.21

run11	4/16/2009	10:24:45	11.58	8.21
run11	4/16/2009	10:25:00	11.58	8.21
run11	4/16/2009	10:25:15	11.58	8.21
run11	4/16/2009	10:25:30	11.59	8.21
run11	4/16/2009	10:25:45	11.62	8.21
run11	4/16/2009	10:26:00	11.64	8.21
run11	4/16/2009	10:26:15	11.66	8.21
run11	4/16/2009	10:26:30	11.66	8.21
run11	4/16/2009	10:26:45	11.66	8.21
run11	4/16/2009	10:27:00	11.66	8.21
run11	4/16/2009	10:27:15	11.66	8.21
run11	4/16/2009	10:27:30	11.66	8.21
run11	4/16/2009	10:27:45	11.68	8.21
run11	4/16/2009	10:28:00	11.7	8.21
run11	4/16/2009	10:28:15	11.69	8.21
run11	4/16/2009	10:28:30	11.67	8.21
run11	4/16/2009	10:28:45	11.66	8.21
run11	4/16/2009	10:29:00	11.67	8.21
run11	4/16/2009	10:29:15	11.68	8.21
run11	4/16/2009	10:29:30	11.68	8.21
run11	4/16/2009	10:29:45	11.66	8.21
run11	4/16/2009	10:30:00	11.63	8.21
run11	4/16/2009	10:30:15	11.62	8.21
run11	4/16/2009	10:30:30	11.62	8.21
run11	4/16/2009	10:30:45	11.61	8.21
run11	4/16/2009	10:31:00	11.61	8.21
run11	4/16/2009	10:31:15	11.61	8.21
run11	4/16/2009	10:31:30	11.62	8.21
run11	4/16/2009	10:31:45	11.61	8.21
run11	4/16/2009	10:32:00	11.62	8.21
run11	4/16/2009	10:32:15	11.63	8.21
run11	4/16/2009	10:32:30	11.6	8.21
run11	4/16/2009	10:32:45	11.56	8.21
run11	4/16/2009	10:33:00	11.57	8.21
run11	4/16/2009	10:33:15	11.58	8.21
run11	4/16/2009	10:33:30	11.58	8.21
run11	4/16/2009	10:33:45	11.57	8.21
run11	4/16/2009	10:34:00	11.56	8.21
run11	4/16/2009	10:34:15	11.58	8.21
run11	4/16/2009	10:34:30	11.6	8.21
run11	4/16/2009	10:34:45	11.62	8.21
run11	4/16/2009	10:35:00	11.62	8.21
run11	4/16/2009	10:35:15	11.6	8.21
run11	4/16/2009	10:35:30	11.58	8.21
run11	4/16/2009	10:35:45	11.58	8.21
run11	4/16/2009	10:36:00	11.58	8.21
run11	4/16/2009	10:36:15	11.57	8.22
run11	4/16/2009	10:36:30	11.59	8.22
run11	4/16/2009	10:36:45	11.62	8.22
run11	4/16/2009	10:37:00	11.64	8.22
run11	4/16/2009	10:37:15	11.63	8.21

run11	4/16/2009	10:37:30	11.64	8.21
run11	4/16/2009	10:37:45	11.65	8.21
run11	4/16/2009	10:38:00	11.65	8.4
run11	4/16/2009	10:38:15	11.64	8.21
run11	4/16/2009	10:38:30	11.64	8.21
run11	4/16/2009	10:38:45	11.6	8.21
run11	4/16/2009	10:39:00	11.56	8.21
run11	4/16/2009	10:39:15	11.56	8.21
run11	4/16/2009	10:39:30	11.57	8.21
run11	4/16/2009	10:39:45	11.61	8.21
run11	4/16/2009	10:40:00	11.65	8.21
run11	4/16/2009	10:40:15	11.67	8.21
run11	4/16/2009	10:40:30	11.67	8.21
run11	4/16/2009	10:40:45	11.64	8.21
run11	4/16/2009	10:41:00	11.62	8.21
run11	4/16/2009	10:41:15	11.62	8.21
run11	4/16/2009	10:41:30	11.63	8.21
run11	4/16/2009	10:41:45	11.63	8.21
run11	4/16/2009	10:42:00	11.64	8.21
run11	4/16/2009	10:42:15	11.64	8.21
run11	4/16/2009	10:42:30	11.65	8.21
run11	4/16/2009	10:42:45	11.66	8.21
run11	4/16/2009	10:43:00	11.64	8.21
run11	4/16/2009	10:43:15	11.59	8.21
run11	4/16/2009	10:43:30	11.54	8.21
run11	4/16/2009	10:43:45	11.55	8.21
run11	4/16/2009	10:44:00	11.56	8.21
run11	4/16/2009	10:44:15	11.57	8.21
run11	4/16/2009	10:44:30	11.6	8.21
run11	4/16/2009	10:44:45	11.64	8.21
run11	4/16/2009	10:45:00	11.66	8.21
run11	4/16/2009	10:45:15	11.63	8.21
run11	4/16/2009	10:45:30	11.55	8.21
run11	4/16/2009	10:45:45	11.55	8.21
run11	4/16/2009	10:46:00	11.6	8.21
run11	4/16/2009	10:46:15	11.65	8.21
run11	4/16/2009	10:46:30	11.67	8.21
run11	4/16/2009	10:46:45	11.67	8.21
run11	4/16/2009	10:47:00	11.67	8.21
run11	4/16/2009	10:47:15	11.68	8.21
run11	4/16/2009	10:47:30	11.67	8.21
run11	4/16/2009	10:47:45	11.66	8.21
run11	4/16/2009	10:48:00	11.63	8.21
run11	4/16/2009	10:48:15	11.62	8.21
run11	4/16/2009	10:48:30	11.64	8.21
run11	4/16/2009	10:48:45	11.67	8.21
run11	4/16/2009	10:49:00	11.68	8.21
run11	4/16/2009	10:49:15	11.68	8.21
run11	4/16/2009	10:49:30	11.69	8.21
run11	4/16/2009	10:49:45	11.67	8.21
run11	4/16/2009	10:50:00	11.66	8.21

run11	4/16/2009	10:50:15	11.68	8.21			
run11	4/16/2009	10:50:30	11.68	8.21			
run11	4/16/2009	10:50:45	11.66	8.21			
run11	4/16/2009	10:51:00	11.65	8.21			
run11	4/16/2009	10:51:15	11.66	8.21			
run11	4/16/2009	10:51:30	11.64	8.21			
run11	4/16/2009	10:51:45	11.64	8.21			
run11	4/16/2009	10:52:00	11.66	8.21			
run11	4/16/2009	10:52:15	11.67	8.21			
run11	4/16/2009	10:52:30	11.65	8.21			
run11	4/16/2009	10:52:45	11.65	8.21			
run11	4/16/2009	10:53:00	11.66	8.21			
run11	4/16/2009	10:53:15	11.67	8.21			
run11	4/16/2009	10:53:30	11.65	8.21			
run11	4/16/2009	10:53:45	11.64	8.21			
run11	4/16/2009	10:54:00	11.63	8.21			
run11	4/16/2009	10:54:15	11.62	8.21			
run11	4/16/2009	10:54:30	11.61	8.21			
run11	4/16/2009	10:54:45	11.62	8.21			
run11	4/16/2009	10:55:00	11.62	8.21			
run11	4/16/2009	10:55:15	11.63	8.21			
run11	4/16/2009	10:55:30	11.62	8.21			
run11	4/16/2009	10:55:45	11.62	8.21			
run11	4/16/2009	10:56:00	11.62	8.21			
run11	4/16/2009	10:56:15	11.64	8.21			
run11	4/16/2009	10:56:30	11.67	8.21			
run11	4/16/2009	10:56:45	11.68	8.21			
run11	4/16/2009	10:57:00	11.66	8.21			
run11	4/16/2009	10:57:15	11.66	8.22			
run11	4/16/2009	10:57:30	11.66	8.22			
run11	4/16/2009	10:57:45	11.64	8.23			
run11	4/16/2009	10:58:00	11.62	8.22			
run11	4/16/2009	10:58:15	11.6	8.21			
run11	4/16/2009	10:58:30	11.58	8.21			
run11	4/16/2009	10:58:45	11.57	8.21			
run11	4/16/2009	10:59:00	11.58	8.21			
run11	4/16/2009	10:59:15	11.6	8.21			
run11	4/16/2009	10:59:30	11.6	8.21			
run11	4/16/2009	10:59:45	11.6	8.21			
averun11	4/16/2009	10:00:00	11.62	8.22	60		
scg6	4/16/2009	11:00:00	11.6	3.55	ALM05992	SO2	44.35
scg6	4/16/2009	11:00:15	11.62	3.82	ALM05992	SO2	44.35
scg6	4/16/2009	11:00:30	11.6	3.45	ALM05992	SO2	44.35
scg6	4/16/2009	11:00:45	11.13	3.93	ALM05992	SO2	44.35
scg6	4/16/2009	11:01:00	8.17	4.07	ALM05992	SO2	44.35
scg6	4/16/2009	11:01:15	4.55	4.66	ALM05992	SO2	44.35
scg6	4/16/2009	11:01:30	2.41	9.28	ALM05992	SO2	44.35
scg6	4/16/2009	11:01:45	1.41	17.81	ALM05992	SO2	44.35
scg6	4/16/2009	11:02:00	0.9	27.05	ALM05992	SO2	44.35
scg6	4/16/2009	11:02:15	0.65	34.23	ALM05992	SO2	44.35
scg6	4/16/2009	11:02:30	0.5	38.76	ALM05992	SO2	44.35

scg6	4/16/2009	11:02:45	0.41	41.33	ALM05992	SO2	44.35
scg6	4/16/2009	11:03:00	0.29	42.47	ALM05992	SO2	44.35
scg6	4/16/2009	11:03:15	0.25	43.15	ALM05992	SO2	44.35
scg6	4/16/2009	11:03:30	0.23	43.73	ALM05992	SO2	44.35
scg6	4/16/2009	11:03:45	0.21	44.24	ALM05992	SO2	44.35
o2zero1	4/16/2009	11:03:30	0.23	43.73	ALM05992	SO2	44.35
so2span1	4/16/2009	11:03:45	0.21	44.24	ALM05992	SO2	44.35
scg9	4/16/2009	11:04:00	0.2	44.62	ALM00690	O2	11.8
scg9	4/16/2009	11:04:15	0.19	44.99	ALM00690	O2	11.8
scg9	4/16/2009	11:04:30	0.17	44.71	ALM00690	O2	11.8
scg9	4/16/2009	11:04:45	0.15	44.46	ALM00690	O2	11.8
scg9	4/16/2009	11:05:00	0.48	44.14	ALM00690	O2	11.8
scg9	4/16/2009	11:05:15	2.87	43.76	ALM00690	O2	11.8
scg9	4/16/2009	11:05:30	5.96	41.69	ALM00690	O2	11.8
scg9	4/16/2009	11:05:45	7.96	34.54	ALM00690	O2	11.8
scg9	4/16/2009	11:06:00	8.97	24.4	ALM00690	O2	11.8
scg9	4/16/2009	11:06:15	9.42	16.03	ALM00690	O2	11.8
scg9	4/16/2009	11:06:30	11.01	10.42	ALM00690	O2	11.8
scg9	4/16/2009	11:06:45	11.81	7.32	ALM00690	O2	11.8
scg9	4/16/2009	11:07:00	11.88	5.42	ALM00690	O2	11.8
scg9	4/16/2009	11:07:15	11.91	4.21	ALM00690	O2	11.8
scg9	4/16/2009	11:07:30	11.93	3.21	ALM00690	O2	11.8
scg9	4/16/2009	11:07:45	11.95	2.76	ALM00690	O2	11.8
scg9	4/16/2009	11:08:00	11.95	2.37	ALM00690	O2	11.8
scg9	4/16/2009	11:08:15	11.96	1.9	ALM00690	O2	11.8
scg9	4/16/2009	11:08:30	11.97	1.51	ALM00690	O2	11.8
scg9	4/16/2009	11:08:45	11.97	1.48	ALM00690	O2	11.8
scg9	4/16/2009	11:09:00	11.97	0.62	ALM00690	O2	11.8
scg9	4/16/2009	11:09:15	11.98	0.35	ALM00690	O2	11.8
scg9	4/16/2009	11:09:30	11.98	0.27	ALM00690	O2	11.8
scg9	4/16/2009	11:09:45	11.98	0.07	ALM00690	O2	11.8
so2zero1	4/16/2009	11:09:45	11.98	0.07	ALM00690	O2	11.8
o2span1	4/16/2009	11:07:15	11.91	4.21	ALM00690	O2	11.8
run12	4/16/2009	11:10:00	11.98	0.31			
run12	4/16/2009	11:10:15	11.98	0.75			
run12	4/16/2009	11:10:30	11.99	0.83			
run12	4/16/2009	11:10:45	12.01	0.9			
run12	4/16/2009	11:11:00	11.99	0.83			
run12	4/16/2009	11:11:15	11.86	0.74			
run12	4/16/2009	11:11:30	11.7	0.57			
run12	4/16/2009	11:11:45	11.63	0.16			
run12	4/16/2009	11:12:00	11.61	0.13			
run12	4/16/2009	11:12:15	11.63	0.18			
run12	4/16/2009	11:12:30	11.65	0.45			
run12	4/16/2009	11:12:45	11.63	0.99			
run12	4/16/2009	11:13:00	11.55	1.54			
run12	4/16/2009	11:13:15	11.5	2.02			
run12	4/16/2009	11:13:30	11.5	2.14			
run12	4/16/2009	11:13:45	11.51	3.63			
run12	4/16/2009	11:14:00	11.52	6.94			
run12	4/16/2009	11:14:15	11.53	8.91			

run12	4/16/2009	11:14:30	11.58	8.24
run12	4/16/2009	11:14:45	11.61	8.9
run12	4/16/2009	11:15:00	11.61	8.06
run12	4/16/2009	11:15:15	11.61	8.18
run12	4/16/2009	11:15:30	11.6	8.13
run12	4/16/2009	11:15:45	11.6	8.12
run12	4/16/2009	11:16:00	11.6	8.13
run12	4/16/2009	11:16:15	11.59	8.12
run12	4/16/2009	11:16:30	11.6	8.14
run12	4/16/2009	11:16:45	11.61	8.13
run12	4/16/2009	11:17:00	11.62	8.13
run12	4/16/2009	11:17:15	11.62	8.13
run12	4/16/2009	11:17:30	11.63	8.13
run12	4/16/2009	11:17:45	11.64	8.13
run12	4/16/2009	11:18:00	11.65	8.13
run12	4/16/2009	11:18:15	11.65	8.13
run12	4/16/2009	11:18:30	11.65	8.13
run12	4/16/2009	11:18:45	11.63	8.13
run12	4/16/2009	11:19:00	11.64	8.13
run12	4/16/2009	11:19:15	11.64	8.13
run12	4/16/2009	11:19:30	11.63	8.13
run12	4/16/2009	11:19:45	11.63	8.13
run12	4/16/2009	11:20:00	11.61	8.13
run12	4/16/2009	11:20:15	11.6	8.13
run12	4/16/2009	11:20:30	11.62	8.13
run12	4/16/2009	11:20:45	11.66	8.13
run12	4/16/2009	11:21:00	11.68	8.13
run12	4/16/2009	11:21:15	11.68	8.13
run12	4/16/2009	11:21:30	11.66	8.13
run12	4/16/2009	11:21:45	11.64	8.13
run12	4/16/2009	11:22:00	11.64	8.13
run12	4/16/2009	11:22:15	11.63	8.13
run12	4/16/2009	11:22:30	11.59	8.13
run12	4/16/2009	11:22:45	11.57	8.13
run12	4/16/2009	11:23:00	11.61	8.13
run12	4/16/2009	11:23:15	11.65	8.13
run12	4/16/2009	11:23:30	11.67	8.13
run12	4/16/2009	11:23:45	11.67	8.13
run12	4/16/2009	11:24:00	11.65	8.13
run12	4/16/2009	11:24:15	11.65	8.13
run12	4/16/2009	11:24:30	11.65	8.13
run12	4/16/2009	11:24:45	11.64	8.13
run12	4/16/2009	11:25:00	11.66	8.13
run12	4/16/2009	11:25:15	11.7	8.13
run12	4/16/2009	11:25:30	11.7	8.13
run12	4/16/2009	11:25:45	11.69	8.13
run12	4/16/2009	11:26:00	11.66	8.13
run12	4/16/2009	11:26:15	11.65	8.13
run12	4/16/2009	11:26:30	11.66	8.13
run12	4/16/2009	11:26:45	11.65	8.13
run12	4/16/2009	11:27:00	11.63	8.13

run12	4/16/2009	11:27:15	11.63	8.13
run12	4/16/2009	11:27:30	11.65	8.13
run12	4/16/2009	11:27:45	11.67	8.13
run12	4/16/2009	11:28:00	11.68	8.13
run12	4/16/2009	11:28:15	11.67	8.13
run12	4/16/2009	11:28:30	11.68	8.13
run12	4/16/2009	11:28:45	11.69	8.13
run12	4/16/2009	11:29:00	11.7	8.13
run12	4/16/2009	11:29:15	11.69	8.13
run12	4/16/2009	11:29:30	11.68	8.13
run12	4/16/2009	11:29:45	11.68	8.13
run12	4/16/2009	11:30:00	11.67	8.13
run12	4/16/2009	11:30:15	11.69	8.13
run12	4/16/2009	11:30:30	11.68	8.13
run12	4/16/2009	11:30:45	11.67	8.13
run12	4/16/2009	11:31:00	11.67	8.13
run12	4/16/2009	11:31:15	11.67	8.13
run12	4/16/2009	11:31:30	11.69	8.13
run12	4/16/2009	11:31:45	11.68	8.13
run12	4/16/2009	11:32:00	11.66	8.13
run12	4/16/2009	11:32:15	11.62	8.13
run12	4/16/2009	11:32:30	11.63	8.13
run12	4/16/2009	11:32:45	11.65	8.13
run12	4/16/2009	11:33:00	11.66	8.13
run12	4/16/2009	11:33:15	11.67	8.13
run12	4/16/2009	11:33:30	11.67	8.13
run12	4/16/2009	11:33:45	11.66	8.13
run12	4/16/2009	11:34:00	11.64	8.13
run12	4/16/2009	11:34:15	11.6	8.13
run12	4/16/2009	11:34:30	11.59	8.13
run12	4/16/2009	11:34:45	11.6	8.13
run12	4/16/2009	11:35:00	11.62	8.13
run12	4/16/2009	11:35:15	11.62	8.13
run12	4/16/2009	11:35:30	11.61	8.13
run12	4/16/2009	11:35:45	11.61	8.13
run12	4/16/2009	11:36:00	11.62	8.13
run12	4/16/2009	11:36:15	11.63	8.13
run12	4/16/2009	11:36:30	11.64	8.13
run12	4/16/2009	11:36:45	11.64	8.13
run12	4/16/2009	11:37:00	11.64	8.13
run12	4/16/2009	11:37:15	11.63	8.13
run12	4/16/2009	11:37:30	11.63	8.13
run12	4/16/2009	11:37:45	11.63	8.13
run12	4/16/2009	11:38:00	11.64	8.13
run12	4/16/2009	11:38:15	11.65	8.13
run12	4/16/2009	11:38:30	11.64	8.13
run12	4/16/2009	11:38:45	11.63	8.13
run12	4/16/2009	11:39:00	11.63	8.13
run12	4/16/2009	11:39:15	11.63	8.13
run12	4/16/2009	11:39:30	11.64	8.13
run12	4/16/2009	11:39:45	11.64	8.13

run12	4/16/2009	11:40:00	11.65	8.13
run12	4/16/2009	11:40:15	11.65	8.13
run12	4/16/2009	11:40:30	11.66	8.13
run12	4/16/2009	11:40:45	11.66	8.13
run12	4/16/2009	11:41:00	11.66	8.13
run12	4/16/2009	11:41:15	11.67	8.13
run12	4/16/2009	11:41:30	11.68	8.13
run12	4/16/2009	11:41:45	11.67	8.13
run12	4/16/2009	11:42:00	11.65	8.13
run12	4/16/2009	11:42:15	11.62	8.13
run12	4/16/2009	11:42:30	11.63	8.13
run12	4/16/2009	11:42:45	11.66	8.13
run12	4/16/2009	11:43:00	11.67	8.13
run12	4/16/2009	11:43:15	11.69	8.13
run12	4/16/2009	11:43:30	11.7	8.13
run12	4/16/2009	11:43:45	11.7	8.13
run12	4/16/2009	11:44:00	11.68	8.13
run12	4/16/2009	11:44:15	11.68	8.13
run12	4/16/2009	11:44:30	11.69	8.13
run12	4/16/2009	11:44:45	11.67	8.13
run12	4/16/2009	11:45:00	11.68	8.13
run12	4/16/2009	11:45:15	11.68	8.13
run12	4/16/2009	11:45:30	11.66	8.13
run12	4/16/2009	11:45:45	11.63	8.13
run12	4/16/2009	11:46:00	11.63	8.13
run12	4/16/2009	11:46:15	11.65	8.13
run12	4/16/2009	11:46:30	11.69	8.13
run12	4/16/2009	11:46:45	11.7	8.13
run12	4/16/2009	11:47:00	11.69	8.13
run12	4/16/2009	11:47:15	11.69	8.13
run12	4/16/2009	11:47:30	11.68	8.14
run12	4/16/2009	11:47:45	11.66	8.13
run12	4/16/2009	11:48:00	11.66	8.13
run12	4/16/2009	11:48:15	11.65	8.14
run12	4/16/2009	11:48:30	11.64	8.13
run12	4/16/2009	11:48:45	11.65	8.13
run12	4/16/2009	11:49:00	11.67	8.16
run12	4/16/2009	11:49:15	11.67	8.13
run12	4/16/2009	11:49:30	11.69	8.13
run12	4/16/2009	11:49:45	11.7	8.13
run12	4/16/2009	11:50:00	11.71	8.16
run12	4/16/2009	11:50:15	11.71	8.13
run12	4/16/2009	11:50:30	11.7	8.13
run12	4/16/2009	11:50:45	11.68	8.13
run12	4/16/2009	11:51:00	11.67	8.13
run12	4/16/2009	11:51:15	11.67	8.13
run12	4/16/2009	11:51:30	11.68	8.14
run12	4/16/2009	11:51:45	11.69	8.14
run12	4/16/2009	11:52:00	11.69	8.13
run12	4/16/2009	11:52:15	11.67	8.13
run12	4/16/2009	11:52:30	11.67	8.12

run12	4/16/2009	11:52:45	11.69	8.13
run12	4/16/2009	11:53:00	11.72	8.13
run12	4/16/2009	11:53:15	11.72	8.13
run12	4/16/2009	11:53:30	11.73	8.13
run12	4/16/2009	11:53:45	11.73	8.14
run12	4/16/2009	11:54:00	11.75	8.13
run12	4/16/2009	11:54:15	11.76	8.13
run12	4/16/2009	11:54:30	11.75	8.13
run12	4/16/2009	11:54:45	11.73	8.13
run12	4/16/2009	11:55:00	11.72	8.13
run12	4/16/2009	11:55:15	11.72	8.13
run12	4/16/2009	11:55:30	11.7	8.13
run12	4/16/2009	11:55:45	11.68	8.13
run12	4/16/2009	11:56:00	11.72	8.13
run12	4/16/2009	11:56:15	11.74	8.13
run12	4/16/2009	11:56:30	11.76	8.13
run12	4/16/2009	11:56:45	11.78	8.13
run12	4/16/2009	11:57:00	11.79	8.13
run12	4/16/2009	11:57:15	11.8	8.13
run12	4/16/2009	11:57:30	11.81	8.13
run12	4/16/2009	11:57:45	11.81	8.13
run12	4/16/2009	11:58:00	11.77	8.13
run12	4/16/2009	11:58:15	11.74	8.13
run12	4/16/2009	11:58:30	11.74	8.13
run12	4/16/2009	11:58:45	11.76	8.13
run12	4/16/2009	11:59:00	11.78	8.13
run12	4/16/2009	11:59:15	11.77	8.13
run12	4/16/2009	11:59:30	11.75	8.13
run12	4/16/2009	11:59:45	11.74	8.13
run12	4/16/2009	12:00:00	11.74	8.13
run12	4/16/2009	12:00:15	11.74	8.13
run12	4/16/2009	12:00:30	11.76	8.13
run12	4/16/2009	12:00:45	11.8	8.13
run12	4/16/2009	12:01:00	11.82	8.13
run12	4/16/2009	12:01:15	11.82	8.13
run12	4/16/2009	12:01:30	11.82	8.13
run12	4/16/2009	12:01:45	11.82	8.13
run12	4/16/2009	12:02:00	11.83	8.13
run12	4/16/2009	12:02:15	11.82	8.13
run12	4/16/2009	12:02:30	11.82	8.13
run12	4/16/2009	12:02:45	11.82	8.13
run12	4/16/2009	12:03:00	11.82	8.13
run12	4/16/2009	12:03:15	11.82	8.15
run12	4/16/2009	12:03:30	11.82	8.13
run12	4/16/2009	12:03:45	11.81	8.13
run12	4/16/2009	12:04:00	11.79	8.13
run12	4/16/2009	12:04:15	11.79	8.13
run12	4/16/2009	12:04:30	11.78	8.13
run12	4/16/2009	12:04:45	11.77	8.13
run12	4/16/2009	12:05:00	11.75	8.13
run12	4/16/2009	12:05:15	11.74	8.13

run12	4/16/2009	12:05:30	11.74	8.13		
run12	4/16/2009	12:05:45	11.73	8.12		
run12	4/16/2009	12:06:00	11.69	8.13		
run12	4/16/2009	12:06:15	11.66	8.13		
run12	4/16/2009	12:06:30	11.68	8.13		
run12	4/16/2009	12:06:45	11.68	8.13		
run12	4/16/2009	12:07:00	11.64	8.13		
run12	4/16/2009	12:07:15	11.61	8.13		
run12	4/16/2009	12:07:30	11.61	8.13		
run12	4/16/2009	12:07:45	11.63	8.13		
run12	4/16/2009	12:08:00	11.65	8.13		
run12	4/16/2009	12:08:15	11.66	8.13		
run12	4/16/2009	12:08:30	11.68	8.13		
run12	4/16/2009	12:08:45	11.7	8.13		
run12	4/16/2009	12:09:00	11.7	8.13		
run12	4/16/2009	12:09:15	11.73	8.13		
run12	4/16/2009	12:09:30	11.74	8.13		
run12	4/16/2009	12:09:45	11.72	8.13		
run12	4/16/2009	12:10:00	11.69	8.13		
run12	4/16/2009	12:10:15	11.65	8.13		
run12	4/16/2009	12:10:30	11.64	8.13		
run12	4/16/2009	12:10:45	11.65	8.13		
run12	4/16/2009	12:11:00	11.68	8.13		
run12	4/16/2009	12:11:15	11.71	8.13		
run12	4/16/2009	12:11:30	11.73	8.13		
run12	4/16/2009	12:11:45	11.75	8.13		
run12	4/16/2009	12:12:00	11.76	8.13		
run12	4/16/2009	12:12:15	11.77	8.13		
run12	4/16/2009	12:12:30	11.76	8.13		
run12	4/16/2009	12:12:45	11.74	8.13		
run12	4/16/2009	12:13:00	11.72	8.13		
run12	4/16/2009	12:13:15	11.71	8.13		
run12	4/16/2009	12:13:30	11.71	8.13		
run12	4/16/2009	12:13:45	11.71	8.13		
run12	4/16/2009	12:14:00	11.67	8.13		
run12	4/16/2009	12:14:15	11.65	8.13		
run12	4/16/2009	12:14:30	11.65	8.13		
run12	4/16/2009	12:14:45	11.63	8.13		
averun12	4/16/2009	11:15:00	11.68	8.13	60	
scg9	4/16/2009	12:15:00	11.65	6.93	ALM00690 O2	11.8
scg9	4/16/2009	12:15:15	11.7	6.72	ALM00690 O2	11.8
scg9	4/16/2009	12:15:30	11.72	6.98	ALM00690 O2	11.8
scg9	4/16/2009	12:15:45	11.72	6.91	ALM00690 O2	11.8
scg9	4/16/2009	12:16:00	11.79	7.02	ALM00690 O2	11.8
scg9	4/16/2009	12:16:15	11.94	6.89	ALM00690 O2	11.8
scg9	4/16/2009	12:16:30	12.03	6.27	ALM00690 O2	11.8
scg9	4/16/2009	12:16:45	12.07	5.76	ALM00690 O2	11.8
scg9	4/16/2009	12:17:00	12.05	5.08	ALM00690 O2	11.8
scg9	4/16/2009	12:17:15	12.03	4.45	ALM00690 O2	11.8
scg9	4/16/2009	12:17:30	12.03	4.01	ALM00690 O2	11.8
scg9	4/16/2009	12:17:45	12.04	3.64	ALM00690 O2	11.8

scg9	4/16/2009	12:18:00	12.04	3.94	ALM00690	O2	11.8
scg9	4/16/2009	12:18:15	12.04	3.47	ALM00690	O2	11.8
scg9	4/16/2009	12:18:30	12.04	3.58	ALM00690	O2	11.8
scg9	4/16/2009	12:18:45	12.04	3.65	ALM00690	O2	11.8
scg9	4/16/2009	12:19:00	12.04	3.85	ALM00690	O2	11.8
scg9	4/16/2009	12:19:15	12.05	3.65	ALM00690	O2	11.8
scg9	4/16/2009	12:19:30	12.05	3.49	ALM00690	O2	11.8
scg9	4/16/2009	12:19:45	12.05	3.44	ALM00690	O2	11.8
scg9	4/16/2009	12:20:00	12.05	3.62	ALM00690	O2	11.8
scg9	4/16/2009	12:20:15	12.05	0.28	ALM00690	O2	11.8
scg9	4/16/2009	12:20:30	12.05	0.29	ALM00690	O2	11.8
scg9	4/16/2009	12:20:45	12.05	0.34	ALM00690	O2	11.8
so2zero1	4/16/2009	12:20:45	12.05	0.34	ALM00690	O2	11.8
o2span1	4/16/2009	12:17:15	12.03	0.45	ALM00690	O2	11.8
scg6	4/16/2009	12:21:15	12.05	0.62	ALM05992	SO2	44.35
scg6	4/16/2009	12:21:30	12.05	0.24	ALM05992	SO2	44.35
scg6	4/16/2009	12:21:45	12.05	0.07	ALM05992	SO2	44.35
scg6	4/16/2009	12:22:00	11.93	0.37	ALM05992	SO2	44.35
scg6	4/16/2009	12:22:15	9.64	0.28	ALM05992	SO2	44.35
scg6	4/16/2009	12:22:30	5.45	0.66	ALM05992	SO2	44.35
scg6	4/16/2009	12:22:45	2.8	6.27	ALM05992	SO2	44.35
scg6	4/16/2009	12:23:00	1.6	16.21	ALM05992	SO2	44.35
scg6	4/16/2009	12:23:15	1.06	27.34	ALM05992	SO2	44.35
scg6	4/16/2009	12:23:30	0.79	35.27	ALM05992	SO2	44.35
scg6	4/16/2009	12:23:45	0.61	39.8	ALM05992	SO2	44.35
scg6	4/16/2009	12:24:00	0.51	42.4	ALM05992	SO2	44.35
scg6	4/16/2009	12:24:15	0.43	43.36	ALM05992	SO2	44.35
scg6	4/16/2009	12:24:30	0.38	44.25	ALM05992	SO2	44.35
scg6	4/16/2009	12:24:45	0.32	44.62	ALM05992	SO2	44.35
o2zero1	4/16/2009	12:24:30	0.38	44.25	ALM05992	SO2	44.35
so2span1	4/16/2009	12:24:30	0.38	44.25	ALM05992	SO2	44.35

APPENDIX G

Plant Operational Data

16 TOX Stack Test										
Run	Time Start	Time End	Avg SO2 (ppm) - IP.21 AI-16-813A.PV	Avg O2 (%) - IP.21 AI-16-813B.PV	Avg SO2 (ppm) - CEMS Computer	Avg O2 (%) - CEMS Computer	Fuel Rate to TOX (SCFH) FI-16-808.pv	EP FG HHV (BTU/SCF) AI-04-140A.PV	Avg Fire Rate (MMBTU/hr)	SRU Unit Feed Rate (LT/day) FI-16-272B.pv
1	4/14/09 12:00	4/14/09 13:00	8.36	12.23	8.39	12.22	13288	1176	15.6	56.4
2	4/14/09 14:50	4/14/09 15:50	9.62	12.23	9.37	12.22	12736	1189	15.1	55.3
3	4/15/09 9:00	4/15/09 10:00	8.41	11.88	8.24	11.87	13313	1193	15.9	63.6
4	4/15/09 10:26	4/15/09 11:26	9.58	11.93	9.64	11.93	13126	1211	15.9	64.2
5	4/15/09 11:42	4/15/09 12:42	10.63	11.89	10.58	11.89	13139	1210	15.9	64.2
6	4/15/09 13:00	4/15/09 14:00	9.64	11.84	9.60	11.84	12843	1207	15.5	63.8
7	4/15/09 14:12	4/15/09 15:12	11.33	11.85	11.08	11.84	13248	1182	15.7	63.8
8	4/15/09 15:25	4/15/09 16:25	10.48	11.82	10.17	11.81	12977	1185	15.4	64.1
9	4/15/09 16:37	4/15/09 17:37	10.18	11.83	9.98	11.83	12839	1200	15.4	64.0
10	4/16/09 8:45	4/16/09 9:45	7.64	11.73	7.23	11.72	12876	1195	15.4	67.6
11	4/16/09 10:00	4/16/09 11:00	7.55	11.74	7.40	11.73	12831	1208	15.5	67.7
12	4/16/09 11:15	4/16/09 12:15	7.09	11.71	7.36	11.71	12781	1209	15.5	67.9

APPENDIX H

Chain of Custody

METCO Environmental ©

CHAIN OF CUSTODY RECORD

Job No.: 09-177
Job Name: Valero
Location: Norco, LA
Unit: 30X 1600 Unit

Project Manager: M. Hutchinson
Project Supervisor: David Moore

Method: 5

SAMPLE I.D.	DATE	TIME	# OF CONT.	Absorb. Solution	Initial Vol.	SAMPLE ANALYSIS REQUIRED: PART	HCL	CL2	SO2	SO3			Recovered by	REMARKS (Specific Compounds/Methods)
Reagent Blank Acetone	4-13-09		1	Acetone	200ml	✓							David Moore	
Reagent Blank Filter	4-13-09		1	—	—	✓							D. Moore	
R1 Filter	4-14-09		1	—	—	✓							D. Moore	
R1 Front Half	4-14-09		1	—	—	✓							D. Moore	
R2 Filter	4-14-09		1	—	—	✓							D. Moore	
R2 Front Half	4-14-09		1	—	—	✓							D. Moore	
R3 Filter	4-15-09		1	—	—	✓							D. Moore	

Samples Received for Transport/Shipment by:	Chad Centabi	Date:	4/17/09	Time:	1330
Samples Received for Transport/Shipment by:	[illegible]	Date:	4/18/09	Time:	1400
Samples Received for Transport/Shipment by:		Date:		Time:	
Samples Shipped Via:	Fed-EX	Date:	4/20/09	Time:	1700
Samples Received at Laboratory by:	Robert Adams	Date:	4/21/09	Time:	1500
Samples Analyzed by:	M. Baxter	Date:	4/24/09	Time:	0830
Samples Analyzed by:		Date:		Time:	
Data Checked by:	[illegible]	Date:	04/27/09	Time:	0945

VERSION 2
10 MARCH 2003

METCO Environmental ©

CHAIN OF CUSTODY RECORD

Job No.: 09-177
Job Name: Valero
Location: Norco, LA
Unit: 30X 1600 Unit

Project Manager: M. Hutchinson
Project Supervisor: D. Moore

Method: 5

SAMPLE I.D.	DATE	TIME	# OF CONT.	Absorb. Solution	Initial Vol.	SAMPLE ANALYSIS REQUIRED: PART	HCL	CL2	SO2	SO3			Recovered by	REMARKS (Specific Compounds/Methods)
B3-Acetone	4-15-09		1	–	–	✓							Daniel Moore	

Samples Received for Transport/Shipment by: Chad Centofi	Date: 4/17/09	Time: 1330
Samples Received for Transport/Shipment by: [illegible]	Date: 4/18/09	Time: 1400
Samples Received for Transport/Shipment by:	Date:	Time:
Samples Shipped Via: Fed-Ex	Date: 4/20/09	Time: 1700
Samples Received at Laboratory by: Robt Alyne	Date: 4/21/09	Time: 1500
Samples Analyzed by: M. Banter	Date: 4/24/09	Time: 0830
Samples Analyzed by:	Date:	Time:
Data Checked by: [illegible]	Date: 04/27/09	Time: 0945

H-3

09-177

VERSION 2
10 MARCH 2003

APPENDIX I

Resumes of Test Personnel

ROBERT M. PATTERSON; President

Education	B. S. 1983, Central Michigan University; Mt. Pleasant, Michigan, in Geology and Earth Science-Meteorology.
Professional Training Courses	Attended a two-day short course, "Performing and Observing Source Sampling" in Dallas, Texas. Attended a one-day short course on basic supervision. Attended a four-week management course presented by the American Management Association, 1991-1992.
Certification	Certified Visible Emissions Evaluator Certified Cabot Full-Face Respirator Fit Tester
Professional Memberships	Source Evaluation Society American Management Association
Technical Experience	Participated in the sampling of over 1,000 sources, including several of which were sampled simultaneously using more than one sampling train. Thoroughly trained in all EPA testing procedures, 1986-present. Over nineteen years experience with EPA and Texas Air Control Board methods of sampling - both stationary sources and ambient air. CFR, Title 40, Chapter I, Part 60, EPA Methods 1 through 25, and 101 through 110. Performance Specifications 1 through 5. CFR, Title 40, Chapter I, Part 50, Appendix A through F. "Sampling Procedures Manual, Texas Air Control Board, January 1983." Parts 1-1 through 14-6, Appendix B through Appendix M. Experienced with sampling Method 0010, Modified Method 5 Sampling Train; Method 0030, Volatile Organic Sampling Train; and various EPA and "Site Specific" multiple metal and acid gas sampling trains.

(continued)

PATTERSON, Rob (cont'd)

Technical Experience (cont'd)

Over twenty one years experience with EPA and Texas Air Control Board methods of analysis of both stationary and ambient air samples. Particulate matter, SO_3, SO_2, H_2SO_4, NO_x, CO, CO_2, O_2, H_2S, F, TRS, HCl, Cl_2, NH_3, VOC, C_1-C_7, and other organics. Both laboratory and on-site analyses were performed.

Experienced in the sampling and analysis of commercial calibration gas cylinders for sulfur dioxide, oxides of nitrogen, carbon dioxide, oxygen, carbon monoxide, and C_1-C_7 hydrocarbons.

Thoroughly trained in the operation and routine maintenance of the following:

- MSA LIRA Model 202S Infrared Analyzer
- Analytical Instrument Development, Inc. Model 340A Calibration System
- Shimadzu GC-Mini 2 Gas Chromatograph
- Thermo Environmental Model 10AR Oxides of Nitrogen Analyzer
- Thermo Oxygen Analyzer
- Teledyne Model 326 Oxygen Analyzer
- Thermo Environmental Model 48 Carbon Monoxide Analyzer
- Thermo Environmental Model 40 Sulfur Dioxide Analyzer
- Ratfisch Model RS 100 Total Hydrocarbon Analyzer
- Western Research Model 721AT Sulfur Dioxide Analyzer
- Horiba Model PIR 2000 Carbon Dioxide Analyzer
- Ratfisch Model RS 55 Total Hydrocarbon Analyzer
- J.U.M. Model VE-7 Total Hydrocarbon Analyzer

JAMES R. MONFRIES; Senior Quality Assurance Manager

Education	B. S. 1975, University of Texas at Arlington; Arlington, Texas, in Biology with a minor in Chemistry. Graduate work at the University of Texas at Dallas in the Environmental Science Department.
Professional Training Courses	Attended a two-day short course, "Performing and Observing Source Sampling" in Dallas, Texas, July 1976.
Certification	Qualified Individual (Groups I, II, III, and IV) Certified Visible Emissions Evaluator
Professional Memberships	Air and Waste Management Association Source Evaluation Society - Past President
Technical Experience	Participated in the sampling of over 700 sources, serving in the supervisory capacity on over 500 sources. Many of the sources were sampled simultaneously using more than one sampling train at several points in the flue gas stream, 1976-present. Has also supervised several ambient air monitoring studies, including a permanent five-station high volume air sampling network in South Texas, a permanent four-station high volume air sampling network in Pennsylvania, and a permanent seven-station sulfur dioxide sampling network in East Texas. Was Quality Assurance Manager for several ambient air monitoring studies; including a four-station high volume air sampling network for TSP and PM10 in Midlothian, Texas; a single-station high volume air sampling network for PM10 in South Texas; a two-station high volume air sampling network for TSP in Wichita Falls, Texas; and a four-station continuous air sampling network for TSP and PM10 in Jewett, Texas using Thermo Andersen FH 62 C14 Beta Gauge Dust Monitors.

(continued)

MONFRIES, James (cont'd)

Thirty years experience with EPA and Texas Commission on Environmental Quality methods of analysis of both source and ambient air samples for particulates, SO_2, SO_3, H_2SO_4, H_2S, HCl, Cl_2, NO_x, Hydrocarbons, and TRS.

Experienced in the analysis of commercial calibration gas cylinders for sulfur dioxide and oxides of nitrogen.

Experienced with VOST and Modified Method 5 Sampling Procedures.

Thoroughly trained in the operation and routine maintenance of the following:

- Lear Siegler, Inc. SM800 Stack Gas Monitor
- Du Pont Model 460/1 Photometric Analyzer System
- Lear Siegler, Inc. SM1000 Ambient SO_2 Monitor
- Calibrated Instruments Ultragas SO_2 Monitor
- Meloy 285E SO_2 Analyzer
- Meloy SA-700 Fluorescent SO_2 Analyzer
- MSA LIRA Model 202S Infrared Analyzer
- Analytical Instrument Development, Inc. Model 340A Calibration System
- Shimadzu GC-Mini 2 Gas Chromatograph
- Thermo Environmental Model 10S NO_x Analyzer
- Thermo Oxygen Analyzer
- Teledyne Model 326 Oxygen Analyzer
- Thermo Environmental Model 48 Carbon Monoxide Analyzer
- Thermo Environmental Model 40 Sulfur Dioxide Analyzer
- Ratfisch Model RS 103 Total Hydrocarbon Analyzer
- Western Research Model 721AT Sulfur Dioxide Analyzer
- Horiba Model PIR 2000 Carbon Dioxide Analyzer
- Ratfisch Model RS 55 Total Hydrocarbon Analyzer
- J.U.M. Model VE-7 Total Hydrocarbon Analyzer
- Thermo Andersen Model FH 62 C14 Dust Monitor

DANIEL MOORE; Project Supervisor I

Education	Process Technician, October 2000; Louisiana Technical College, River Parishes Campus.
Certifications	Certified Visible Emissions Evaluator HAZMAT certified Adult CPR certified Standard First Aid certified
Technical Experience	Participated in the sampling of over 150 sources, including several of which were sampled simultaneously using more than one sampling train. Thoroughly trained in all EPA testing procedures, 2001-present.

JASON D. PILGRIM; Environmental Scientist III

Education	B. S. in Biological Sciences, May 2007; Louisiana State University, in Baton Rouge, Louisiana.
Technical Experience	Participated in the sampling of over 100 sources, including several of which were sampled simultaneously using more than one sampling train. Thoroughly trained in all EPA testing procedures, 2007-present.

CHAD CENTORBI: Environmental Scientist II

Education	B. S. in Biological Engineering, December 21, 2007; Louisiana State University, Baton Rouge, Louisiana.
Technical Experience	Participated in the sampling of over 50 sources, including several of which were sampled simultaneously using more than one sampling train. Thoroughly trained in all EPA testing procedures, 2008-present.