METCO
ENVIRONMENTAL

LELAP Certificate #02034

SOURCE EMISSIONS SURVEY
OF
MARATHON PETROLEUM COMPANY LLC
GARYVILLE, LOUISIANA 70051
ST. JOHN THE BAPTIST PARISH
FACILITY CONTACT: DAVID CALEBAUGH
CONTACT PHONE: (985) 535-7142
UNIT NUMBER 220 THERMAL
OXIDIZER NUMBER 1 STACK (EQT0204)
LDEQ PERMIT 3039-V6
AGENCY INTEREST NO. 3165

JUNE 2010

TESTING COMPANY: METCO ENVIRONMENTAL
6655 COMPLEX DRIVE
972-931-7127
BATON ROUGE, LOUISIANA 70809
FILE NUMBER 10-054G

" I certify that I have personally checked and am familiar with the information submitted herein, and based on my inquiries of those individuals immediately responsible for obtaining the information, I believe the submitted information is true, accurate, and complete."

James R. Monfries
Senior Quality Assurance Manager

TABLE OF CONTENTS

	PAGE
INTRODUCTION	1
SUMMARY OF RESULTS	2
DISCUSSION OF RESULTS	5
DESCRIPTION OF PROCESS	7
DESCRIPTION OF SAMPLING LOCATION	8
SAMPLING AND ANALYTICAL PROCEDURES	10
DESCRIPTION OF TESTS	19
APPENDICES	20
A. Location of Sampling Points	4 pages
B. Source Emissions Calculations	17 pages
C. Calibration Data	25 pages
D. Field Testing Data	11 pages
E. Analytical Data	9 pages
F. Reference Method Monitors Data	41 pages
G. Plant Operational Data	6 pages
H. LDEQ Permit	116 pages
I. Chain of Custody	2 pages
J. Resumes of Test Personnel	10 pages
	261 total pages

MARATHON PETROLEUM COMPANY LLC
UNIT NUMBER 220 THERMAL
OXIDIZER NUMBER 1 STACK (EQT0204)
LDEQ PERMIT 3039-V6
AGENCY INTEREST NO. 3165
FILE NUMBER 10-054G

INTRODUCTION

METCO Environmental, 6655 Complex Drive, Baton Rouge, Louisiana, conducted a source emissions survey of Marathon Petroleum Company LLC, located at Highway 61 and Marathon Ave., Garyville, Louisiana, on June 4, 2010. The purpose of these tests was to determine the concentrations of particulate matter, oxides of nitrogen, sulfur dioxide, carbon monoxide, and total hydrocarbons being emitted to the atmosphere via the Unit Number 220 Thermal Oxidizer Number 1 Stack (EQT0204), in order to comply with LDEQ Permit 3039-V6. Three tests for were performed while the unit was operating at an average sulfur production rate of 203.411 LTPD. The results demonstrated that the unit was in compliance with LDEQ Permit 3039-V6.

The sampling was performed by the following METCO personnel: Jason LaCroix – Project Supervisor, Logan Nehring, Sam Morris, and Tyler Freeman.

The testing followed the procedures set forth in the Code of Federal Regulations, Title 40, Chapter I, Part 60, Appendix A, Methods 1, 2, 3A, 4, 5, 6C, 7E, 10, and 25A.

SUMMARY OF RESULTS

Unit Number 220 Thermal Oxidizer Number 1 Stack (EQT0204)

Run Number	Particulate Matter Emissions (gr/dscf*)	(lbs/hr)	(lbs/mmBtu)	Oxides of Nitrogen Emissions (dry ppm)	(lbs/hr)	(lbs/mmBtu)	Sulfur Dioxide Emissions (dry ppm**)	(lbs/hr)	(lbs/mmBtu)
1	0.0049	0.76	0.007	23.24	3.00	0.030	38.65	5.68	0.056
2	0.0021	0.32	0.003	23.23	3.03	0.029	37.54	5.61	0.054
3	0.0020	0.31	0.003	23.01	3.00	0.029	38.33	5.77	0.055
Average	0.0030	0.46	0.004	23.16	3.01	0.029	38.17	5.69	0.055
Allowable Emission Rate	----	≤ 0.47	≤ 0.6	----	≤ 12.75	≤ 0.20	≤ 250	≤ 61.67	----

Run Number	Carbon Monoxide Emissions (dry ppm)	(lbs/hr)	(lbs/mmBtu)	Total Hydrocarbons Emissions as Propane (dry ppm)	(lbs/hr)	(lbs/mmBtu)
1	9.84	0.77	0.008	< 0.01	< 0.01	< 0.0001
2	13.45	1.07	0.010	< 0.01	< 0.01	< 0.0001
3	14.06	1.12	0.011	< 0.01	< 0.01	< 0.0001
Average	12.45	0.99	0.010	< 0.01	< 0.01	< 0.0001
Allowable Emission Rate	----	≤ 2.55	----	----	≤ 0.03	≤ 0.0004

* 29.92 "Hg, 68°F (760 mm Hg, 20°C)

** Corrected to 0 percent oxygen.

SUMMARY OF RESULTS

Unit Number 220 Thermal Oxidizer Number 1 Stack (EQT0204)

Run Number	1	2	3
Date	06/04/10	06/04/10	06/04/10
Time	1146-1306	1405-1552	1629-1748
Stack Flow Rate - ACFM	39,443	39,742	39,746
Stack Flow Rate - DSCFM*	18,025	18,201	18,174
% Water Vapor - % Vol.	9.60	9.58	9.80
% CO_2 - % Vol.	4.2	4.1	4.1
% O_2 - % Vol.	3.8	3.7	3.5
% Excess Air @ Sampling Point	18.5	17.8	16.7
Stack Temperature - °F	583	580	578
Stack Pressure - "Hg	29.76	29.74	29.71
Percent Isokinetic	102.8	101.3	100.6
Particulate Matter Emissions Probe & Filter Catch grains/dscf*	0.0049	0.0021	0.0020
grains/cf @ Stack Conditions	0.0022	0.0009	0.0009
lbs/hr	0.76	0.32	0.31
lbs/mmBtu	0.007	0.003	0.003

* 29.92 "Hg, 68°F (760 mm Hg, 20°C)

SUMMARY OF RESULTS

Unit Number 220 Thermal Oxidizer Number 1 Stack (EQT0204)

Run Number	1	2	3
% CO_2 - % Vol.	4.15	4.05	4.12
% O_2 - % Vol.	3.78	3.66	3.53
Oxides of Nitrogen Emissions - dry ppm	23.24	23.23	23.01
Oxides of Nitrogen Emissions - lbs/hr	3.00	3.03	3.00
Oxides of Nitrogen Emissions - lbs/mmBtu*	0.030	0.029	0.029
Sulfur Dioxide Emissions - dry ppm	31.66	30.97	31.86
Sulfur Dioxide Emissions - dry ppm***	38.65	37.54	38.33
Sulfur Dioxide Emissions - lbs/hr	5.68	5.61	5.77
Sulfur Dioxide Emissions - lbs/mmBtu*	0.056	0.054	0.055
Carbon Monoxide Emissions - dry ppm	9.84	13.45	14.06
Carbon Monoxide Emissions - lbs/hr	0.77	1.07	1.12
Carbon Monoxide Emissions - lbs/mmBtu*	0.008	0.010	0.011
Total Hydrocarbons Emissions as Propane - wet ppm	< 0.01	< 0.01	< 0.01
Total Hydrocarbons Emissions as Propane - dry ppm	< 0.01	< 0.01	< 0.01
Total Hydrocarbons Emissions as Propane - lbs/hr	< 0.01	< 0.01	< 0.01
Total Hydrocarbons Emissions as Propane - lbs/mmBtu*	< 0.0001	< 0.0001	< 0.0001

* Calculated using an F_d factor of 8,710 dscf**/million Btu.

** 29.92 "Hg, 68°F (760 mm Hg, 20°C)

*** Corrected to 0% oxygen.

DISCUSSION OF RESULTS

The three tests for particulate matter, oxides of nitrogen, sulfur dioxide, carbon monoxide, and total hydrocarbons appeared to be valid representations of the actual emissions during the tests. All leak checks performed on the sampling train, the pitot tubes, and the reference method monitors sampling system showed no leaks before or after each test. The zero and calibration drift tests of the reference method monitors were stable with no variations greater than 3.0 percent. The calibration error check and the sampling system bias check performed on the reference method monitors prior to testing were valid. The indicative parameters calculated from the field data were in close agreement. The moisture percentages for the three tests were within 1.4 percent of the mean value. The measured flow rates (Q_s) for the tests were within 0.6 percent of the mean value. The rates of sampling for the three tests were within the specified limits (90 to 110 percent isokinetic). The greatest deviation from 100 percent isokinetic was 2.8 percent.

The calculated emissions (pounds per hour) of particulate matter for the three tests showed a range of -33.1 percent to +64.0 percent variation from the mean value.

The NO_2 to NO conversion efficiency check was performed prior to testing on June 4, 2010, from 0836-0906. The results were as follows:

Highest peak value observed: 12.84 ppm
Value observed after 30 minutes: 12.78 ppm
NO_2 to NO conversion efficiency (%) = (Value observed after 30 minutes/Highest peak value observed) x 100
(12.78/12.84) x 100 = 99.5%

The required allowable as found in 40 CFR, Part 60, Appendix A, Method 7E, is 98.0%. Therefore, the NO_2 to NO conversion efficiency check was valid.

The calculated emissions (pounds per hour) of oxides of nitrogen for the three tests showed a range of -0.3 percent to +0.7 percent variation from the mean value.

The calculated emissions (pounds per hour) of sulfur dioxide for the three tests showed a range of -1.3 percent to +1.5 percent variation from the mean value.

The calculated emissions (pounds per hour) of carbon monoxide for the three tests showed a range of -22.0 percent to +13.5 percent variation from the mean value.

The concentrations of total hydrocarbons for the three tests were below the minimum detectable limit of the method.

DESCRIPTION OF PROCESS

Sulfur Units (U220 and 234)

The Sulfur Recovery Units receive gases from the amine and sour water unit and converts the gases to liquid sulfur by passing through catalyst converter beds.

DESCRIPTION OF SAMPLING LOCATION

The sampling location on the Unit Number 220 Thermal Oxidizer Number 1 Stack (EQT0204) is approximately 103 feet above the ground. The sampling ports are located 33 feet (4.86 stack diameters) downstream from a constriction in the stack and 25 feet (3.68 stack diameters) upstream from a constriction in the stack.

SAMPLING LOCATION

Unit Number 220 Thermal Oxidizer Number 1 Stack (EQT0204)

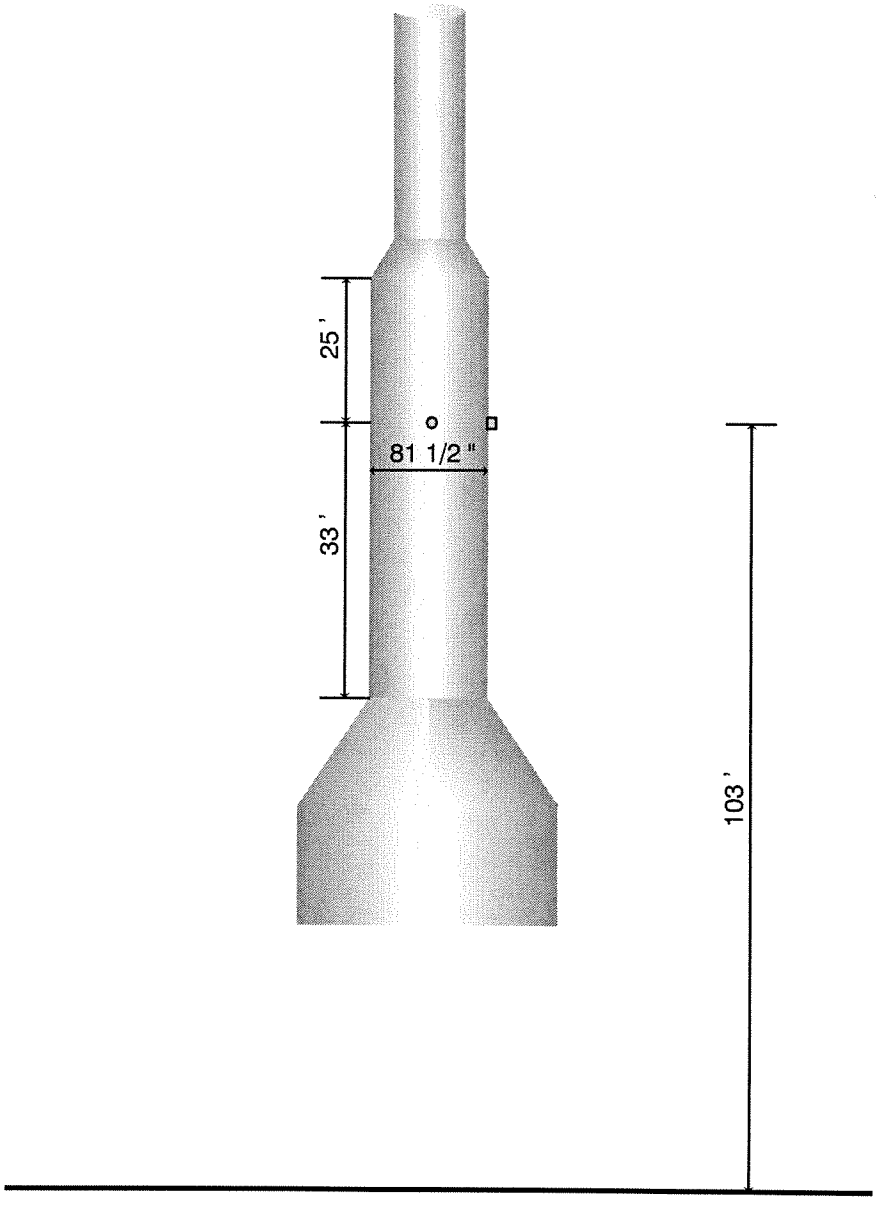

Not to Scale

SAMPLING AND ANALYTICAL PROCEDURES

The testing followed the procedures set forth in the Code of Federal Regulations, Title 40, Chapter I, Part 60, Appendix A, Methods 1, 2, 3A, 4, 5, 6C, 7E, 10, and 25A.

A preliminary velocity traverse was made at each of the two ports on the stack, in order to determine the uniformity and magnitude of the flow prior to testing. All traverse points were checked for cyclonic flow and the average angle of flow was equal to 1.0 degrees. Alternate procedures would be required if the angle of cyclonic flow was greater than 20 degrees. Twelve traverse points were sampled from each of the two ports for a total of twenty-four traverse points.

The sampling train was leak-checked at the nozzle before each test and again after each test, at the highest vacuum reading recorded during the test. This was done to predetermine the possibility of a diluted sample.

The reference method monitors sampling system was leak-checked at the end of the sampling probe before sampling and again at the conclusion of sampling.

The pitot tube lines were checked for leaks before and after each test under both a vacuum and a pressure. The lines were also checked for clearance and the manometer was zeroed before each test.

Particulate Matter

Triplicate samples for particulate matter were collected. The samples were taken according to EPA Methods 1, 2, 3A, 4, and 5. For each run, samples of three-minute duration were taken isokinetically at each of the twenty-four traverse points for a total sampling time of 72 minutes. Reagent blanks were submitted.

The " front-half " of the sampling train contained the following components:

Stainless Steel Nozzle
Heated Glass Probe @ 248°F ± 25°F
Heated Glass Fiber Filter and Glass Support @ 248°F ± 25°F

The " back-half " of the sampling train contained the following components:

Impinger Number	Contents	Amount	Parameter Collected
1	Deionized Water	100 ml	Moisture
2	Deionized Water	100 ml	Moisture
3	Empty	--------	Moisture
4	Silica Gel	200 g	Moisture

Particulate matter emissions were calculated from gravimetric analysis using only the " front-half " collections of the sampling train.

Oxides of Nitrogen

The oxides of nitrogen sampling was performed according to EPA Method 7E. A Thermo Environmental Model 42I oxides of nitrogen Analyzer (Serial Number 628919043) was used to monitor the concentrations of oxides of nitrogen during each run. The reference method analyzer was operated at a range of 0 to 100 parts per million, with a calibration span of 94.9 parts per million. A multi-point calibration was performed on the reference method analyzer prior to testing. An analyzer calibration error check, sampling system bias check, and NO_2 to NO conversion efficiency check were also conducted. After each run, the zero and calibration drift of the reference method monitor was checked. The calibration gases were as follows:

Zero Nitrogen
45.3 ppm NO in N_2 (ALM 62169)
94.9 ppm NO in N_2 (BLM 1094)

The reference method sampling system consisted of a heated probe, a chilled condenser, and a Teflon sample line. The calibration gases for the bias and drift checks were introduced upstream of the chilled condenser.

Calibration gas certifications are included in Appendix C.

Sulfur Dioxide

The sulfur dioxide sampling was performed according to EPA Method 6C. A Western Research Model 721AT Sulfur Dioxide Analyzer (Serial Number 205880) was used to monitor the concentrations of sulfur dioxide during each run. The reference method analyzer was operated at a range of 0 to 100 parts per million, with a calibration span of 96.0 parts per million. A multi-point calibration was performed on the reference method analyzer prior to testing. An analyzer calibration error check and a sampling system bias check were also conducted prior to testing. After each run, the zero and calibration drift of the reference method monitor was checked. The calibration gases were as follows:

Zero Nitrogen
43.6 ppm SO_2 in N_2 (ALM 25404)
96.0 ppm SO_2 in N_2 (BLM 4038)

The reference method sampling system consisted of a heated probe, a chilled condenser, and a Teflon sample line. The calibration gases for the bias and drift checks were introduced upstream of the chilled condenser.

Calibration gas certifications are included in Appendix C.

Carbon Monoxide

The carbon monoxide sampling was performed according to EPA Method 10 using the continuous sampling procedure. A Thermo Environmental Model 48I Carbon Monoxide

Analyzer (Serial Number 618717294) was used to monitor the concentrations of carbon monoxide during each run. The reference method analyzer was operated at a range of 0 to 100 parts per million, with a calibration span of 92.1 parts per million. A multi-point calibration was performed on the reference method analyzer prior to testing. An analyzer calibration error check and a sampling system bias check were also conducted prior to testing. After each run, the zero and calibration drift of the reference method monitor was checked. The calibration gases were as follows:

Zero Nitrogen
42.9 ppm CO in N_2 (ALM 51832)
92.1 ppm CO in N_2 (ALM 55827)

The reference method sampling system consisted of a heated probe, a chilled condenser, and a Teflon sample line. The calibration gases for the bias and drift checks were introduced upstream of the chilled condenser.

Calibration gas certifications are included in Appendix C.

Total Hydrocarbons

The total hydrocarbons sampling was performed according to EPA Method 25A. A J.U.M. Model VE-7 Total Hydrocarbon Analyzer (Serial Number 0005119-10) was used to monitor the concentrations of total hydrocarbons during each run. The reference method analyzer was operated at a range of 0 to 100 parts per million. A multi-point calibration was performed on the reference method analyzer prior to testing. An analyzer calibration error check and a sampling system bias check were also conducted prior to testing. After each run, the zero and calibration drift of the reference method monitor was checked. The calibration gases were as follows:

Zero Nitrogen
26.3 ppm C_3H_8 in N_2 (BAL 445)

46.4 ppm C_3H_8 in N_2 (2L1152)
85.3 ppm C_3H_8 in N_2 (BLM 1547)

The reference method sampling system consisted of a heated probe and a heated Teflon sample line. The calibration gases for the bias and drift checks were introduced upstream of the heated Teflon sample line.

Calibration gas certifications are included in Appendix C.

Oxygen

The oxygen sampling was performed according to EPA Method 3A. A Horiba Model VA-3000 Oxygen/Carbon Dioxide Analyzer (Serial Number FOLO4909) was used to monitor the concentrations of oxygen during each run. The reference method analyzer was operated at a range of 0 to 25 percent, with a calibration span of 20.90 percent. A multi-point calibration was performed on the reference method analyzer prior to testing. An analyzer calibration error check and a sampling system bias check were also conducted prior to testing. After each run, the zero and calibration drift of the reference method monitor was checked. The calibration gases were as follows:

Zero Nitrogen
11.80 percent O_2 in N_2 (ALM 53591)
20.90 percent O_2 in air (ALM 57740)

The reference method sampling system consisted of a heated probe, a chilled condenser, and a Teflon sample line. The calibration gases for the bias and drift checks were introduced upstream of the chilled condenser.

Calibration gas certifications are included in Appendix C.

Carbon Dioxide

The carbon dioxide sampling was performed according to EPA Method 3A. A Horiba Model VA-3000 Oxygen/Carbon Dioxide Analyzer (Serial Number FOLO4909) was used to monitor the concentrations of carbon dioxide during each run. The reference method analyzer was operated at a range of 0 to 25 percent, with a calibration span of 20.10 percent. A multi-point calibration was performed on the reference method analyzer prior to testing. An analyzer calibration error check and a sampling system bias check were also conducted prior to testing. After each run, the zero and calibration drift of the reference method monitor was checked. The calibration gases were as follows:

Zero Nitrogen
12.10 percent CO_2 in N_2 (ALM 53591)
20.10 percent CO_2 in N_2 (ALM 13495)

The reference method sampling system consisted of a heated probe, a chilled condenser, and a Teflon sample line. The calibration gases for the bias and drift checks were introduced upstream of the chilled condenser.

Calibration gas certifications are included in Appendix C.

Schematic Diagram of the EPA Method 5 Sampling Train for Particulate Matter

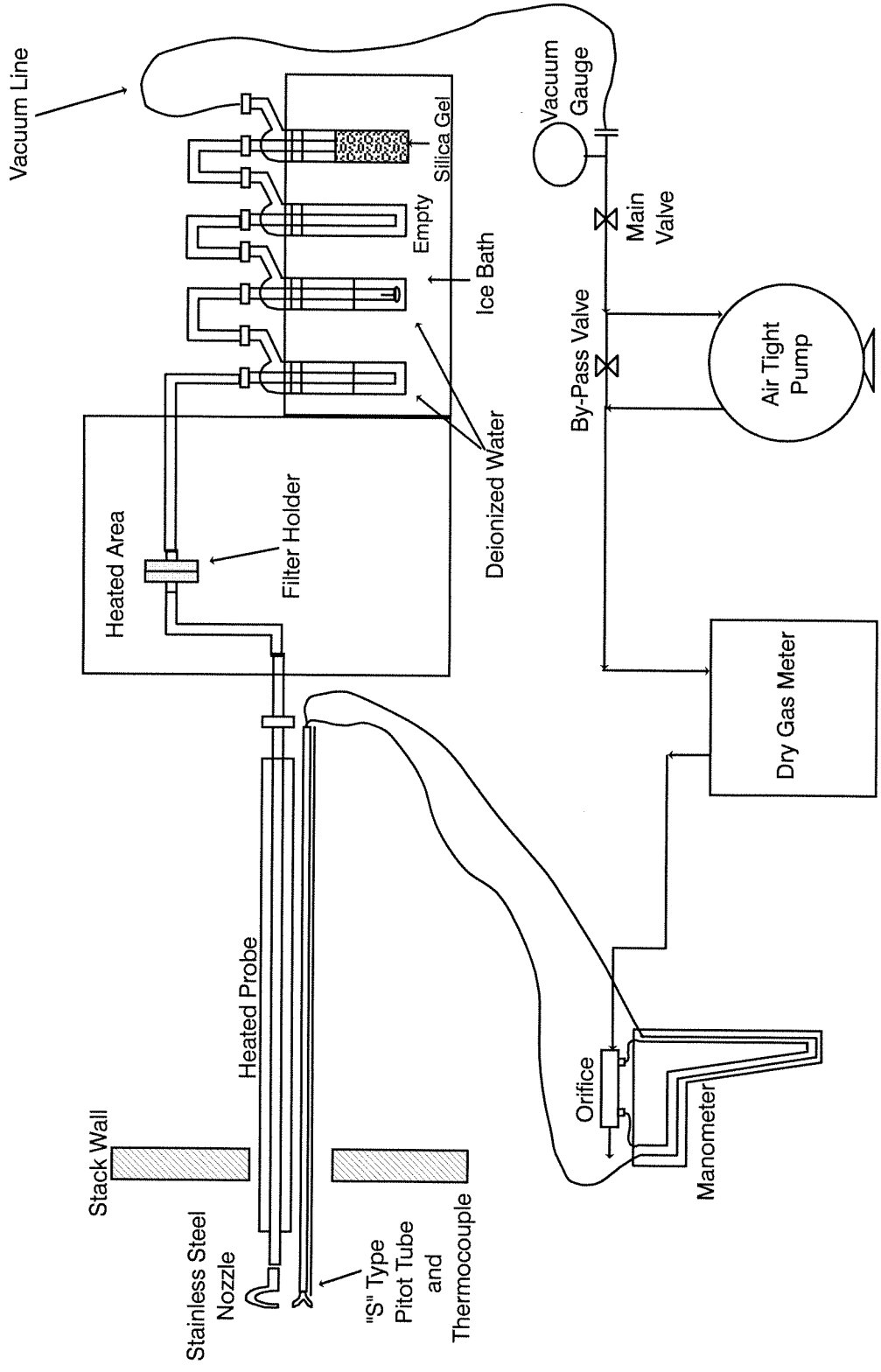

Reference Method Monitors Sampling System (EPA Methods 3A, 6C, 7E, and 10)

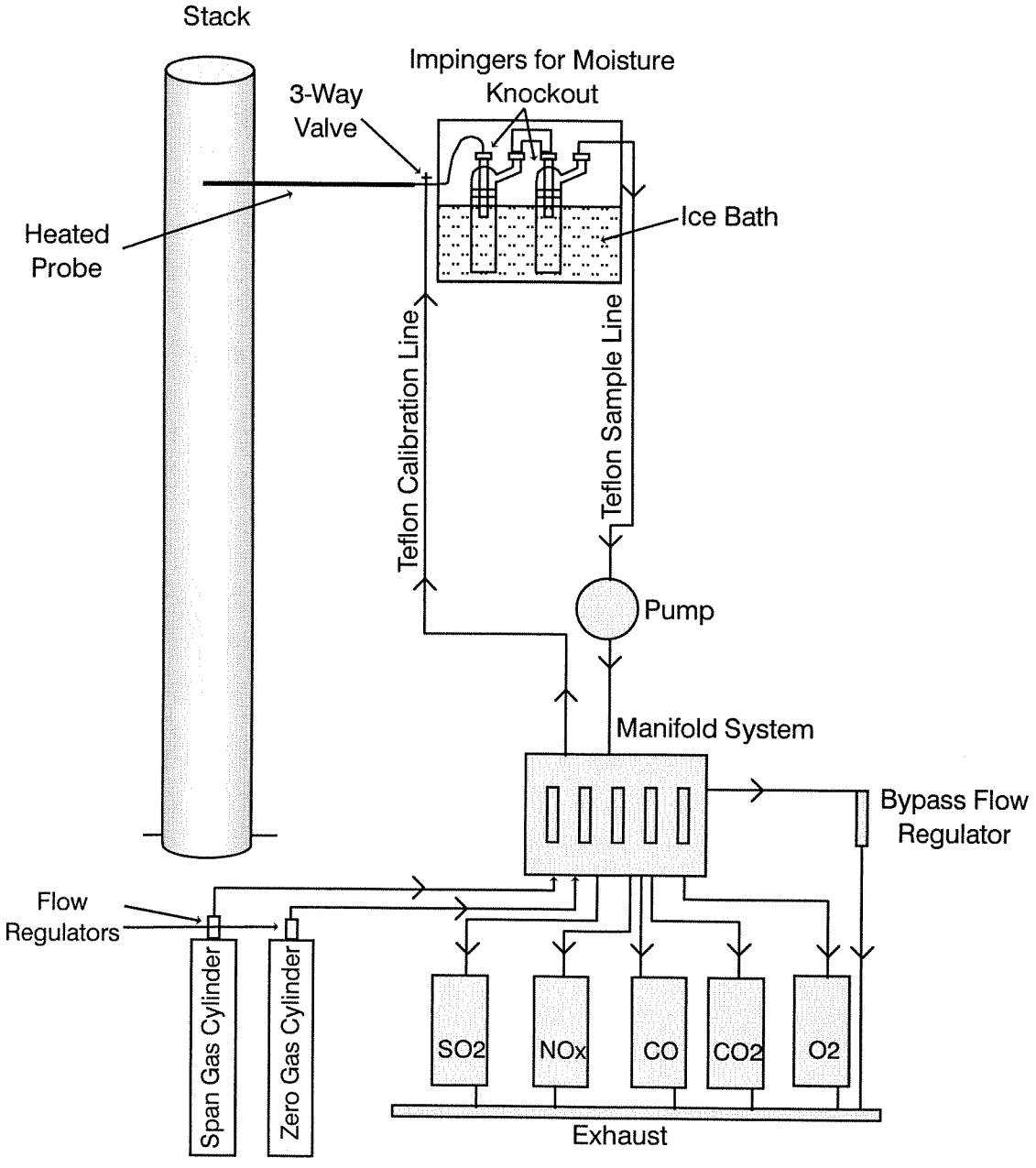

Reference Method Monitor Sampling System (EPA Method 25A)

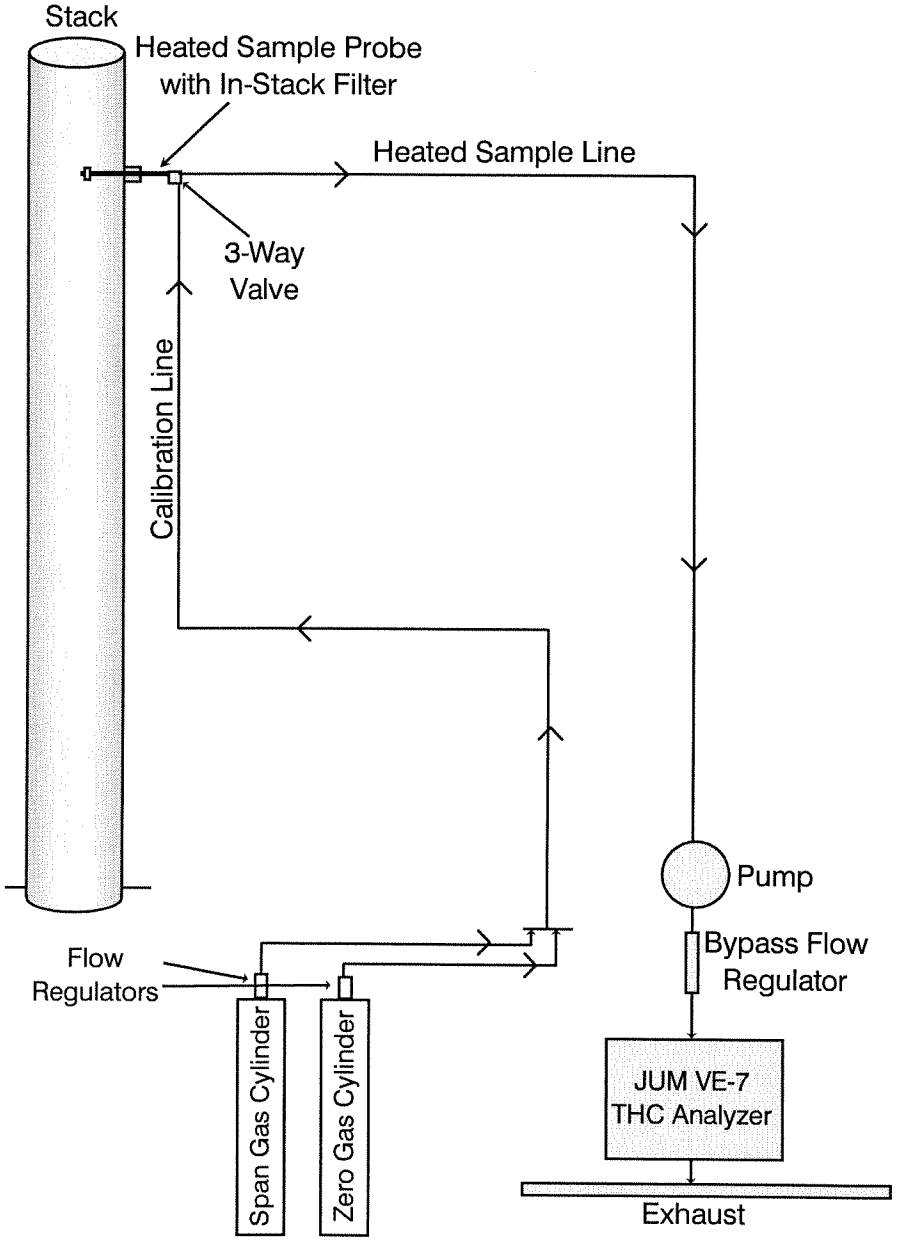

DESCRIPTION OF TESTS

Personnel from METCO Environmental arrived at the plant at 7:00 a.m. on Friday, June 4, 2010. After meeting with plant personnel and attending a brief safety orientation, the equipment was moved onto the Unit Number 220 Thermal Oxidizer Number 1 Stack (EQT0204). The reference method monitors were calibrated and the equipment was prepared for testing. The preliminary data was collected. The NO_2 to NO conversion efficiency check was performed. The first test for particulate matter, oxides of nitrogen, sulfur dioxide, carbon monoxide, and total hydrocarbons began at 11:46 a.m. Testing continued until completion of the third test at 5:48 p.m.

The equipment was moved off of the stack and loaded into the sampling van. The samples were recovered and transported to METCO Environmental's laboratory in Dallas, Texas, for analysis and evaluation.

Field operations at Marathon Petroleum Company LLC, Unit Number 220 Thermal Oxidizer Number 1 Stack (EQT0204), located in Garyville, Louisiana, were completed at 8:00 p.m. on Friday, June 4, 2010.

APPENDICES

A. Location of Sampling Points
B. Source Emissions Calculations
C. Calibration Data
D. Field Testing Data
E. Analytical Data
F. Reference Method Monitors Data
G. Plant Operational Data
H. LDEQ Permit
I. Chain of Custody
J. Resumes of Test Personnel

APPENDIX A

Location of Velocity Sampling Points
Unit Number 220 Thermal Oxidizer Number 1 Stack (EQT0204)

The sampling ports are located 33 feet (4.86 stack diameters) downstream from a constriction in the stack and 25 feet (3.68 stack diameters) upstream from a constriction in the stack. The locations of the sampling points were calculated as follows:

Port and Wall Thickness = 10 inches
Inside Stack Diameter = 81 1/2 inches

Point Number	Percent of Diameter From Wall	Distance From Wall
1	2.1	1 11/16 "
2	6.7	5 7/16 "
3	11.8	9 5/8 "
4	17.7	14 7/16 "
5	25.0	20 3/8 "
6	35.6	29 "
7	64.4	52 1/2 "
8	75.0	61 1/8 "
9	82.3	67 1/16 "
10	88.2	71 7/8 "
11	93.3	76 1/16 "
12	97.9	79 13/16 "

APPENDIX A

Location of Velocity Sampling Points

Unit Number 220 Thermal Oxidizer Number 1 Stack (EQT0204)

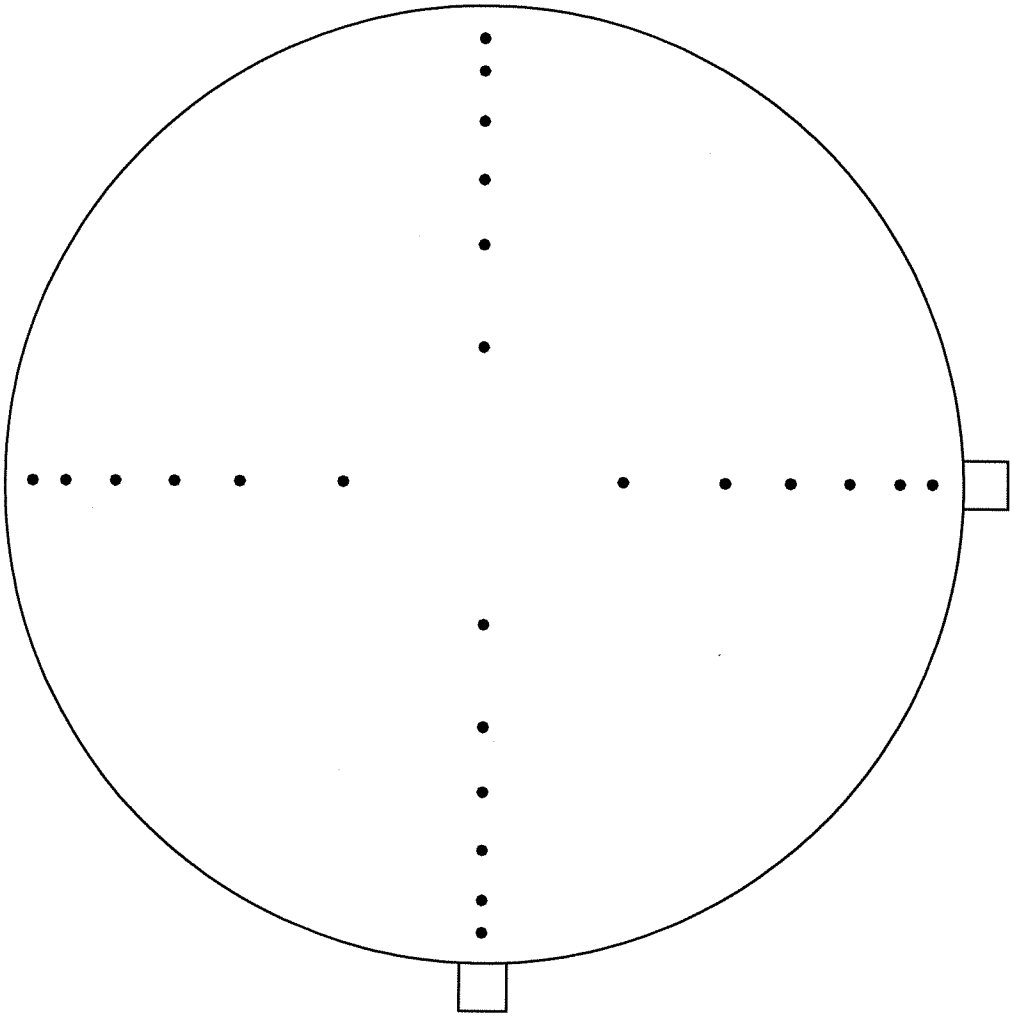

APPENDIX A

Location of Reference Method Monitors Sampling Points
Unit Number 220 Thermal Oxidizer Number 1 Stack (EQT0204)

The sampling ports are located 33 feet (4.86 stack diameters) downstream from a constriction in the stack and 25 feet (3.68 stack diameters) upstream from a constriction in the stack. The locations of the sampling points were calculated as follows:

Port and Wall Thickness = 10 inches

Inside Stack Diameter = 81 1/2 inches

Point Number	Percent of Diameter From Wall	Distance From Wall
1	16.7	13 5/8 "
2	50.0	40 3/4 "
3	83.3	67 7/8 "

APPENDIX A

Location of Reference Method Monitors Sampling Points
Unit Number 220 Thermal Oxidizer Number 1 Stack (EQT0204)

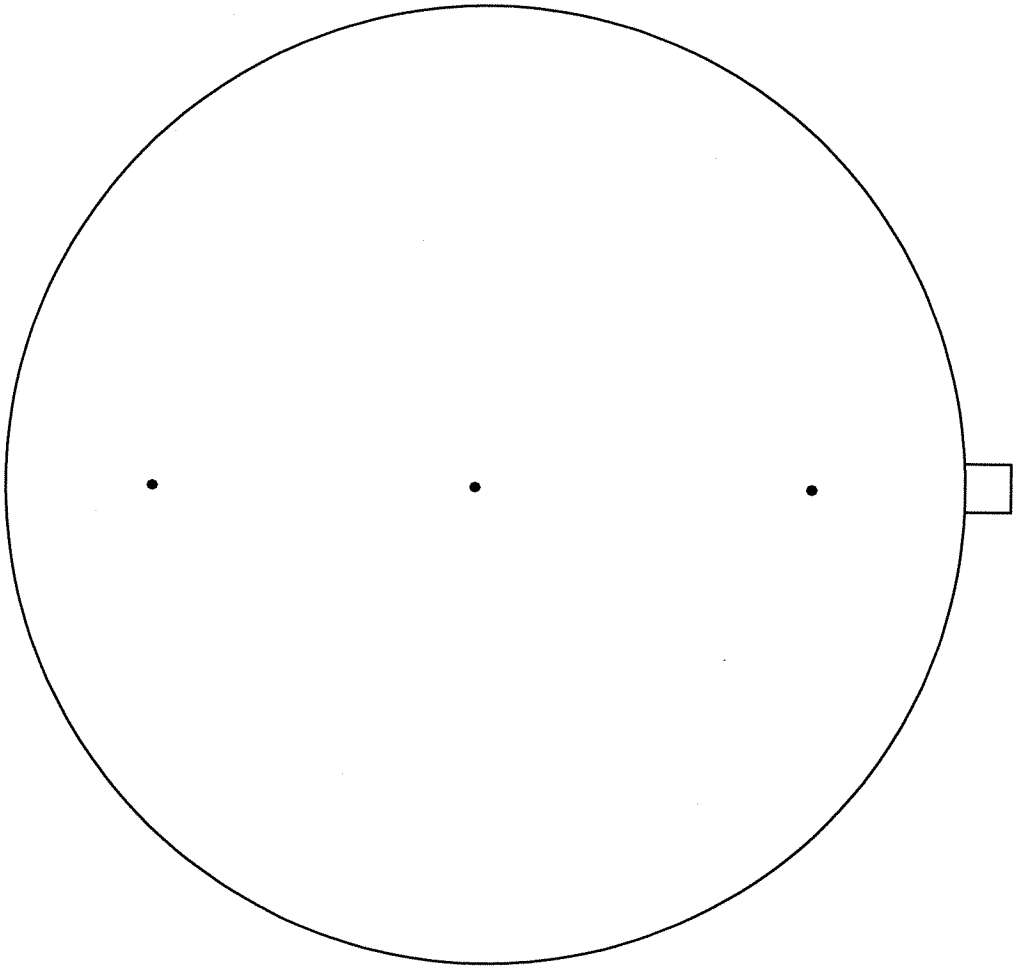

APPENDIX B

Nomenclature and Equations
for
Calculation of Source Emissions

NOMENCLATURE FOR PARTICULATE CALCULATIONS

Symbol	English Units	Metric Units	Description
A_s	$in.^2$	m^2	Stack Area
C_{an}	gr/dscf*	g/dscm*	Particulate - probe, cyclone, and filter
C_{ao}	gr/dscf*	g/dscm*	Particulate - total
C_{at}	gr/CF @ stack conditions	g/m^3	Particulate - probe, cyclone, and filter
C_{au}	gr/CF @ stack conditions	g/m^3	Particulate - total
C_{aw}	lbs/hr	kg/hr	Particulate - probe, cyclone, and filter
C_{ax}	lbs/hr	kg/hr	Particulate - total
C_p			Pitot Tube Calibration Factor
D_n	in.	m	Sampling Nozzle Diameter
%EA			Percent Excess Air at sampling point
g	$32.174\ ft/sec^2$		Acceleration of Gravity
%I			Percent Isokinetic
%M			Percent Moisture in the stack gas by volume
M_d			Mole fraction of dry gas

* 29.92 " Hg, 68° F (760 mm Hg, 20° C)

Symbol	English Units	Metric Units	Description
m_f	mg	mg	Particulate - probe, cyclone, and filter
M_{water}	18 lb/lb-mole		Molecular Weight of water
m_t	mg	mg	Particulate - total
MW	lb/lb-mole	g/g-mole	Molecular Weight of stack gas
MW_{air}	28.96 lb/ lb-mole		Molecular Weight of air
MW_d	lb/lb-mole	g/g-mole	Molecular Weight of dry stack gas
P_b	"Hg Absolute	mm Hg	Barometric Pressure
P_m	"H_2O	mm H_2O	Orifice Pressure drop
P_s	"Hg Absolute	mm Hg	Stack Pressure
ΔP	"H_2O	mm H_2O	Velocity Head of stack gas
P_{std}	29.92 "Hg	760 mm Hg	Standard Barometric Pressure
Q_a	ACFM	m^3/hr	Stack Gas Volume at actual stack conditions
Q_s	DSCFM*	dscm/hr*	Stack Gas Volume at 29.92 "Hg, 528 °R, dry
R	21.83 "Hg-ft^3/lb-mole °R		Universal Gas Constant
T_m	°F	°C	Average Gas Meter Temperature

* 29.92 " Hg, 68° F (760 mm Hg, 20° C)

Symbol	English Units	Metric Units	Description
T_t	min	min	Net time of test
T_s	°F	°C	Stack Temperature
T_{std}	528 °R	293 °K	Standard Temperature
V_m	ft^3	m^3	Volume of dry gas sampled @ meter conditions
Vm_{std}	dscf*	dscm*	Volume of dry gas sampled @ standard conditions
V_s	fpm	m/sec	Stack velocity @ stack conditions
V_w	ml	ml	Total water collected in impingers and silica gel
Vw_{gas}	scf*	scm*	Volume of water vapor collected @ standard conditions
ρ_{air}	0.0752 lbs/ft^3		Density of Air
ρ_{water}	1 g/ml		Density of Water
ρ_{man}	62.32 lbs/ft^3		Density of Manometer Oil

* 29.92 " Hg, 68° F (760 mm Hg, 20° C)

EXAMPLE CALCULATIONS

1. Volume of dry gas sampled at standard conditions. *

$$Vm_{std} = Vm \left(\frac{T_{std}}{T_m + 460} \right) \left[\frac{P_b + \frac{P_m}{13.6}}{P_{std}} \right]$$

$$Vm_{std} = 17.65\, Vm \left[\frac{P_b + \frac{P_m}{13.6}}{T_m + 460} \right] = dscf$$

$$Vm_{std} = dscf \times 0.028317 = dscm$$

2. Volume of water vapor collected at standard conditions. *

$$Vw_{gas} = \frac{(V_w - gms\ SO_2{}^{**})\, \rho_{water}\, R\, T_{std}}{P_{std}\, M_{water}\, 453.6}$$

$$Vw_{gas} = 0.0472\, (V_w - gms\ SO_2{}^{**}) = scf$$

$$Vw_{gas} = scf \times 0.028317 = scm$$

3. Percent moisture in stack gas.

$$\%M = \frac{Vw_{gas}}{Vm_{std} + Vw_{gas}} \times 100 = \%$$

* 29.92 " Hg, 68° F (760 mm Hg, 20° C)

** gms SO_2 subtracted only when SO_2 is collected in the sampling train being used to determine the volume of water vapor collected.

4. *Mole fraction of dry gas.*

$$M_d = \frac{100 - \%M}{100}$$

5. *Average molecular weight of dry stack gas.*

$$MW_d = \left[\%CO_2 \times \frac{44}{100}\right] + \left[\%O_2 \times \frac{32}{100}\right] + \left[\%N_2 \times \frac{28}{100}\right] + \left[\%CO \times \frac{28}{100}\right] = lb/lb\text{-}mole$$

$$= g/g\text{-}mole$$

6. *Molecular weight of stack gas.*

$$MW = MW_d \times M_d + 18\,(1 - M_d) = \frac{lb}{lb\text{-}mole} = g/g\text{-}mole$$

7. *Percent excess air at sampling point.*

$$\%EA = \frac{100\,[\%O_2 - (0.5\,\%CO)]}{0.265\,(\%N_2) - [\%O_2 - (0.5\,\%CO)]}$$

8. *Stack Pressure.*

$$P_s = P_b + \frac{\text{Stack Pressure}\ ''H_2O}{13.6} = ''Hg\ Absolute$$

$$P_s = ''Hg\ Abs. \times 25.4 = mm\ Hg$$

9. *Stack velocity at stack conditions.*

$$V_s = C_p\, 60 \left[\frac{2g \times \rho_{man} \times P_{std} \times MW_{air} \times (T_s + 460)}{12 \times \rho_{air} \times P_s \times MW \times T_{std}} \right]^{1/2} \times \sqrt{\Delta P}\ average$$

$$V_s = 5{,}123.8\, C_p \left[\frac{(T_s + 460)}{P_s \times MW} \right]^{1/2} \sqrt{\Delta P}\ average = fpm$$

$$V_s = fpm \times 0.00508 = m/sec$$

10. *Dry stack gas volume at standard conditions.* *

$$Q_s = \frac{1}{144} V_s \times A_s \times M_d \times \frac{T_{std}}{T_s + 460} \times \frac{P_s}{P_{std}}$$

$$Q_s = \frac{0.123\, V_s \times A_s \times M_d \times P_s}{T_s + 460} = DSCFM$$

$$Q_s = DSCFM \times 1.6990 = dscm/hr$$

11. *Actual stack gas volume at stack conditions.*

$$Q_a = \frac{V_s \times A_s}{144} = ACFM$$

$$Q_a = ACFM \times 1.6990 = m^3/hr$$

* 29.92 " Hg, 68° F (760 mm Hg, 20° C)

12. *Percent Isokinetic.*

$$\%I = \frac{Vm_{std} \times (T_s + 460) \times P_{std} \times 100 \times 144\ in^2/ft^2}{M_d \times T_{std} \times P_s \times T_t \times V_s \left(\frac{\pi \times D_n^2}{4}\right)}$$

$$\%I = \frac{1039 \times Vm_{std} \times (T_s + 460)}{M_d \times P_s \times T_t \times V_s \times D_n^2}$$

13. *Particulate – probe, cyclone, and filter.*

$$C_{an} = \frac{m_f}{Vm_{std}} \times \frac{1\ gr}{64.8\ mg}$$

$$C_{an} = 0.0154 \times \frac{m_f}{Vm_{std}} = gr/dscf\ *$$

$$C_{an} = gr/dscf \times 2.290 = g/dscm\ *$$

14. *Particulate total.*

$$C_{ao} = 0.0154 \times \frac{m_t}{Vm_{std}} = gr/dscf\ *$$

$$C_{ao} = gr/dscf \times 2.290 = g/dscm\ *$$

* 29.92 " Hg, 68° F (760 mm Hg, 20° C)

15. *Particulate – probe, cyclone, and filter at stack conditions.*

$$C_{at} = C_{an} \times \frac{P_s}{P_{std}} \times \frac{(T_{std})}{(T_s + 460)} \times M_d$$

$$C_{at} = \frac{17.65 \times C_{an} \times P_s \times M_d}{T_s + 460} = gr/CF$$

$$C_{at} = gr/CF \times 2.290 = g/m^3$$

16. *Particulate – total, at stack conditions.*

$$C_{au} = \frac{17.65 \times C_{ao} \times P_s \times M_d}{T_s + 460} = gr/CF$$

$$C_{au} = gr/CF \times 2.290 = g/m^3$$

17. *Particulate – probe, cyclone, and filter.*

$$C_{aw} = C_{an} \times Q_s \times \frac{60\ min}{1\ hr} \times \frac{1\ lb}{7000\ gr}$$

$$C_{aw} = 0.00857 \times C_{an} \times Q_s = lbs/hr$$

$$C_{aw} = lbs/hr \times 0.4536 = kg/hr$$

18. *Particulate – total.*

$C_{ax} = 0.00857 \times C_{ao} \times Q_s = lbs/hr$

$C_{ax} = lbs/hr \times 0.4536 = kg/hr$

EXAMPLE CALCULATIONS

*lbs/hr = ppm x CF x 60 min/hr x DSCFM**

*CF = Conversion Factor for ppm to lbs/scf**

Compound	Conversion Factor
NO_x	1.194×10^{-7}
SO_2	1.660×10^{-7}
CO	7.273×10^{-8}
THC as Propane	1.145×10^{-7}

** 29.92 "Hg, 68°F (760 mm Hg, 20°C)*

EXAMPLE CALCULATIONS

$$\text{lbs/million Btu} = \frac{\text{ppm} \times CF \times F_d \text{ factor} \times 20.9\%O_2}{20.9\%O_2 - \%O_2 \text{ measured}}$$

$$\text{lbs/million Btu} = \frac{\text{gr/dscf*} \times \frac{1 \text{ lb}}{7{,}000 \text{ gr}} \times F_d \text{ factor} \times 20.9\%O_2}{20.9\%O_2 - \%O_2 \text{ measured}}$$

*CF = Conversion factor for ppm to lbs/dscf**

Compound	Conversion Factor
SO_2	1.660×10^{-7}
NO_x	1.194×10^{-7}
CO	7.273×10^{-8}
THC as Propane	1.145×10^{-7}

F_d = Oxygen based F factor

Fuel	F_d Factor
Natural Gas	8,710 dscf*/million Btu

** 29.92 "Hg, 68°F (760 mm Hg, 20°C)*

EXAMPLE CALCULATIONS

$$E\ corr. = E\ meas. \times \frac{20.9\%\ O_2 - \%\ O_2\ corr.}{20.9\%\ O_2 - \%\ O_2\ meas.}$$

E corr. = *Emission Rate corrected for Oxygen*
E meas. = *Emission Rate measured*
% O_2 corr. = *The Oxygen content to be corrected to (ie. 0.0% O_2)*
% O_2 meas. = *The Oxygen content measured*

EXAMPLE CALCULATIONS

Equation 7E-5

$$C_{gas} = (\overline{C} - C_o)\ \frac{C_{ma}}{C_m - C_o}$$

Where: C_{gas} = *Effluent gas concentration - dry basis (ppm)*

$\overline{C}$ = *Average gas concentration indicated by gas analyzer - dry basis (ppm)*

C_o = *Average of initial and final system calibration bias check responses for the zero gas (ppm)*

C_m = *Average of initial and final system calibration bias check responses for the upscale calibration gas (ppm)*

C_{ma} = *Actual concentration of the upscale calibration gas (ppm)*

METCO ENVIRONMENTAL

SOURCE EMISSION SURVEY

JOB NUMBER: 10-054
JOB NAME: MARATHON PETROLEUM
LOCATION: GARYVILLE, LOUISIANA
UNIT TESTED: UNIT 220 THERMAL OXIDIZER NUMBER 1 STACK

SOURCE EMISSION CALCULATIONS

			RUN NUMBER		
SYMBOL	DESCRIPTION	UNITS	1	2	3
DATE			06/04/10	06/04/10	06/04/10
BEGIN TIME			1146	1405	1629
END TIME			1306	1552	1748
P(b)	BAROMETRIC PRESSURE	"Hg Abs.	29.78	29.76	29.73
		(mm Hg)	(756.00)	(756.00)	(755.00)
P(m)	ORIFICE PRESSURE DROP	"H2O	1.210	1.230	1.228
		(mm H2O)	(30.700)	(31.200)	(31.200)
	DGM CALIBRATION FACTOR		0.989	0.989	0.989
V(m)	VOLUME DRY GAS SAMPLED	ft.^3	48.276	48.176	48.056
	@ METER CONDITIONS	(m^3)	(1.367)	(1.364)	(1.361)
	LEAK CHECK VOLUME	ft.^3	0.251	0.189	0.179
T(m)	AVERAGE GAS METER	DEG.F	74	75	78
	TEMPERATURE	(DEG.C)	(23)	(24)	(26)
V(m[std])*	VOLUME DRY GAS SAMPLED	DSCF	47.660	47.443	47.013
	@ STANDARD CONDITIONS*	(DSCM)	(1.350)	(1.343)	(1.331)
V(w)	TOTAL WATER COLLECTED, IMPINGERS & SILICA GEL	ml	107.2	106.5	108.2
V(w[gas])	VOLUME WATER VAPOR	SCF	5.060	5.027	5.107
	COLLECTED @ STANDARD	(SCM)	(0.143)	(0.142)	(0.145)
	CONDITIONS*				
%M	MOISTURE IN STACK GAS BY VOLUME	%	9.60	9.58	9.80
Md	MOL FRACTION OF DRY GAS		0.9040	0.9042	0.9020
Tt	NET TIME OF TEST	MINUTES	72	72	72

* 68 Deg.F, 29.92 "Hg (20 Deg.C, 760 mm Hg)

METCO ENVIRONMENTAL

SOURCE EMISSION CALCULATIONS

JOB NUMBER: 10-054
JOB NAME: MARATHON PETROLEUM
LOCATION: GARYVILLE, LOUISIANA
UNIT TESTED: UNIT 220 THERMAL OXIDIZER NUMBER 1 STACK

			RUN NUMBER		
SYMBOL	DESCRIPTION	UNITS	1	2	3
CO2		%	4.2	4.1	4.1
O2		%	3.8	3.7	3.5
CO		%	0.0	0.0	0.0
N2		%	92.0	92.2	92.4
%EA	EXCESS AIR @ SAMPLING POINT	%	18.5	17.8	16.7
MWd	MOLECULAR WEIGHT OF DRY STACK GAS	LB/LB-MOLE (g/g-MOLE)	28.82 (28.82)	28.80 (28.80)	28.80 (28.80)
MW	MOLECULAR WEIGHT OF STACK GAS	LB/LB-MOLE (g/g-MOLE)	27.78 (27.78)	27.77 (27.77)	27.74 (27.74)
Cp	PITOT TUBE CALIBRATION		0.805	0.805	0.805
DELTA P	VELOCITY HEAD OF STACK GAS	"H2O (mm H20)	0.056 (1.400)	0.057 (1.400)	0.057 (1.400)
DELTA P ^(1/2)		"H2O	0.235	0.237	0.237
Ts	STACK TEMPERATURE	DEG. F (DEG. C)	583 (306)	580 (304)	578 (303)
Ps	STACK PRESSURE	"Hg Abs. (mm Hg) "H20	29.76 (756.00) -0.30	29.74 (755.00) -0.30	29.71 (755.00) -0.30
Vs	STACK VELOCITY @ STACK CONDITIONS	FPM (m/SEC.)	1,089 (6)	1,097 (6)	1,097 (6)
As	STACK AREA	(SQ.INCHES) (SQ.METERS)	5,217 (3)	5,217 (3)	5,217 (3)
Qs	DRY STACK GAS VOLUME @ STANDARD CONDITIONS* WET STACK GAS VOLUME @ STANDARD CONDITIONS*	DSCFM (DSCM/HR) WSCFH	18,025 (30,624) 1,196,350	18,201 (30,923) 1,207,764	18,174 (30,878) 1,208,914
Qa	ACTUAL STACK GAS VOLUME @ STACK CONDITIONS	ACFM (m^3/HR)	39,443 (67,014)	39,742 (67,522)	39,746 (67,528)
Dn	SAMPLING NOZZLE DIAM.	IN. (m)	0.488 (0.012)	0.488 (0.012)	0.488 (0.012)
%I	PERCENT ISOKINETIC	%	102.8	101.3	100.6

* 68 Deg.F, 29.92 "Hg (20 Deg.C, 760 mm Hg)

SOURCE EMISSION CALCULATIONS

JOB NUMBER: 10-054
JOB NAME: MARATHON PETROLEUM
LOCATION: GARYVILLE, LOUISIANA
UNIT TESTED: UNIT 220 THERMAL OXIDIZER NUMBER 1 STACK

			RUN NUMBER		
SYMBOL	DESCRIPTION	UNITS	1	2	3
Mf	PARTICULATE - PROBE, CYCLONE AND FILTER	mg	15.2	6.4	6.1
Mt	PARTICULATE - TOTAL	mg	----	----	----
Can	PARTICULATE - PROBE, CYCLONE AND FILTER	gr/DSCF*	0.0049	0.0021	0.0020
		(g/DSCM)	(0.0112)	(0.0048)	(0.0046)
Cao	PARTICULATE - TOTAL	gr/DSCF*	----	----	----
		(g/DSCM)	----	----	----
Cat	PARTIC.-PROBE, CYCLONE AND FILTER @ STACK COND.	gr/CF	0.0022	0.0009	0.0009
		(g/m3)	(0.0050)	(0.0021)	(0.0021)
Cau	PARTICULATE - TOTAL @ STACK CONDITIONS	gr/CF	----	----	----
		(g/m3)	----	----	----
Caw	PARTICULATE - PROBE, CYCLONE AND FILTER	LBS/HR	0.76	0.32	0.31
		(Kg/HR)	(0.34)	(0.15)	(0.14)
Cax	PARTICULATE - TOTAL	LBS/HR	----	----	----
		(Kg/HR)	----	----	----

* 68 Deg.F, 29.92 "Hg (20 Deg.C, 760 mm Hg)

APPENDIX C

Calibration Data

Equipment	Calibration Factor	Calibration Date
Pitot Tube #30-10-3	0.805	04/21/10
Probe Tip #30-2	0.488	04/23/10
Dry Gas Meter #12-1	0.989	04/08/10
Stack Unit Orifice #12-1		04/09/10
Digital Temperature Indicator #12-1		01/14/10
Barometer #43-2		03/16/10

METCO ENVIRONMENTAL

Pitot Tube Calibration

Date: 4-21-10 Time: 1325

Pitot No: 30-10-3 T_s: 72

Pitot Dimensions: 10' x 3/8" C_{pstd}: 0.990

Pitot Inspections

Pitot tips level and perpendicular YES / NO
Pitot tips free from obstruction YES / NO
Pitot tips damaged YES / NO

Motor Setting	fps mark	Calibration Standard Start	Calibration Standard End	$\sqrt{\text{Standard Average}}$	High	$\sqrt{\text{High}}$	Cal. Factor	Low	$\sqrt{\text{Low}}$	Cal. Factor
7	20	0.10	0.10	0.316	0.15	0.387	0.808	0.15	0.387	0.808
14	30	0.22	0.22	0.468	0.34	0.583	0.796	0.33	0.574	0.808
20	40	0.34	0.34	0.583	0.51	0.714	0.808	0.51	0.714	0.808
28	50	0.54	0.54	0.735	0.82	0.900	0.803	0.81	0.900	0.808
35	60	0.80	0.80	0.894	1.20	1.095	0.808	1.20	1.095	0.808
41	70	1.00	1.00	1.000	1.50	1.225	0.808	1.50	1.225	0.808
50	80	1.30	1.30	1.140	2.00	1.414	0.798	1.95	1.396	0.808
62	90	1.60	1.60	1.265	2.40	1.549	0.808	2.40	1.549	0.808
28*	**50***	0.54	0.54	0.735	0.82	0.906	0.803	0.81	0.900	0.808
28*	**50***	0.54	0.54	0.735	0.82	0.906	0.803	0.81	0.900	0.808
Average							0.805			0.808

***not included in average**

$$C_p = C_{pstd}\left(\frac{\sqrt{\Delta P_{std}}}{\sqrt{\Delta P}}\right)$$

Calibrator: [signature]

Office: Baton Rouge, LA

Summary of Results:

Normal high side calibration factor 0.805

variation + 0.37 variation - 1.12

Normal low side calibration factor 0.808

variation + 0.00 variation - 0.00

QA/QC Check
Completeness ✓ Legibility ✓ Accuracy ✓ Specifications ✓ Reasonableness ✓

Checked by: [signature]

Version 2
12 March 2008

METCO ENVIRONMENTAL

Nozzle Calibration

Nozzle Set No. I Caliper ID: 43-1

Date: 4-23-10 Calibrator: Daniel Moore

Office/Location: Baton Rouge, LA

	1	2	3	4	5	6
Reading 1	0.170	0.488	0.252	0.645	0.315	0.362
Reading 2	0.170	0.488	0.252	0.646	0.315	0.362
Reading 3	0.170	0.488	0.251	0.646	0.316	0.362
Reading 4	0.170	0.488	0.252	0.645	0.315	0.362
Reading 5	0.170	0.488	0.252	0.645	0.315	0.362
Reading 6	0.170	0.488	0.252	0.644	0.315	0.362
Reading 7	0.170	0.488	0.252	0.645	0.315	0.362
Reading 8	0.171	0.488	0.252	0.645	0.315	0.362
Reading 9	0.170	0.488	0.252	0.645	0.315	0.362
Reading 10	0.171	0.488	0.252	0.645	0.315	0.362
Average	0.170	0.488	0.252	0.645	0.315	0.362

	7	8	9	10	11	12
Reading 1	0.248	0.418	0.122	0.508	0.117	0.175
Reading 2	0.248	0.419	0.122	0.508	0.117	0.174
Reading 3	0.248	0.419	0.122	0.508	0.117	0.176
Reading 4	0.247	0.419	0.122	0.507	0.117	0.175
Reading 5	0.248	0.419	0.122	0.507	0.117	0.175
Reading 6	0.247	0.419	0.122	0.508	0.117	0.176
Reading 7	0.248	0.418	0.122	0.508	0.117	0.175
Reading 8	0.248	0.419	0.122	0.508	0.117	0.175
Reading 9	0.248	0.419	0.122	0.508	0.117	0.175
Reading 10	0.248	0.419	0.122	0.508	0.117	0.175
Average	0.248	0.419	0.122	0.508	0.117	0.175

QA/QC Check
Completeness ___ Legibility ___ Accuracy ___ Specifications ___ Reasonableness ___

Checked by: [signature]

10-054G
Version 2
1 January 2009

METCO ENVIRONMENTAL

Dry Gas Meter Calibration

Dry Gas Meter Number 12-1

Date: 4-8-10

ΔH ("H_2O)	C_{dg}
0.50	0.994
1.00	0.995
1.50	0.989
2.00	0.982
3.00	0.987
4.00	0.984
Average	0.989

Variation: + 0.61 %

- 0.71 %

Adjustment Required: Yes____ No ✓

Calibrator: David Moore

Office: Baton Rouge, LA

QA/QC Check

Completeness ✓ Legibility ✓ Accuracy ✓ Specifications ✓ Reasonableness ✓

Checked by: J. LaCroix

METCO ENVIRONMENTAL

DRY GAS METER CALIBRATION

Meter Number: 12-1

Date: 4-8-10

Wet Test Meter No: #7

Calibrator: David Moore

$$\text{Wet Test Meter } VM_{std} = 17.65 \times V_m \frac{P_b + \frac{P_m}{13.6}}{T_m + 460} \times C_f = ____ \text{ scfm}$$

$$\text{Dry Test Meter } VM_{std} = 17.65 \times V_m \frac{P_b + \frac{P_m}{13.6}}{T_m + 460} = ____ \text{ scfm}$$

Run No: 1@ 0.50 "H_2O

Wet Test Meter C_f: ~~0.986~~ 0.998

P_b: 29.88 "Hg

Control Module Vacuum: 5.0 "Hg

	Wet Test Meter				Dry Gas Meter			
	Time	Meter Reading	T_m	P_m	Mete Reading	T_m Inlet	T_m Outlet	P_m
End	1421	5.521	74 °F	-1.80 "H_2O	808.326	73 °F	78 °F	0.50 "H_2O
Start	1408	0.000	74 °F	-1.80 "H_2O	802.806	72 °F	77 °F	0.50 "H_2O
	13	cf^{Δ}	74 $°F_{avg}$	-1.80 "H_2O_{avg}	5.520 cf^{Δ}	75	$°F_{avg}$	0.50 "H_2O_{avg}

$cf^{\Delta} = V_m$ 5.521

$$\text{Wet Test Meter } VM_{std} = 17.65 \times 5.521 \frac{29.88 + \frac{-1.80}{13.6}}{74 + 460} \times 0.998 \; C_f = 5.418 \text{ scfm}$$

$$\text{Dry Gas Meter } VM_{std} = 17.65 \times 5.520 \frac{29.88 + \frac{0.50}{13.6}}{75 + 460} = 5.448 \text{ scfm}$$

$$\text{Calibration Factor } (C_{dg}) = \frac{\text{Wet Test Meter } VM_{std}}{\text{Dry Gas Meter } VM_{std}} \qquad C_{dg} = \frac{5.418}{5.448} = 0.994$$

QA/QC Check

Completeness ✓ Legibility ✓ Accuracy ✓ Specifications ✓ Reasonableness ✓

Checked by: [signature]

METCO ENVIRONMENTAL

DRY GAS METER CALIBRATION

Meter Number: 12-1

Date: 4-8-10

Wet Test Meter No: #7

Calibrator: David Moore

$$\text{Wet Test Meter } VM_{std} = 17.65 \times V_m \frac{P_b + \frac{P_m}{13.6}}{T_m + 460} \times C_f = ____ \text{ scfm}$$

$$\text{Dry Test Meter } VM_{std} = 17.65 \times V_m \frac{P_b + \frac{P_m}{13.6}}{T_m + 460} = ____ \text{ scfm}$$

Run No: 1@1.0 "H_2O

Wet Test Meter C_f: ~~0.986~~ 0.998

P_b: 29.88 "Hg

Control Module Vacuum: 5.0 "Hg

	Wet Test Meter					Dry Gas Meter				
	Time	Meter Reading		T_m	P_m	Mete Reading	T_m Inlet	T_m Outlet	P_m
End	1434	5.589		74 °F	-2.60 "H_2O	815.173	73 °F	81 °F	1.00 "H_2O
Start	1425	0.000		74 °F	-2.60 "H_2O	809.596	72 °F	79 °F	1.00 "H_2O
	9		cf^{Δ}	74 $°F_{avg}$	-2.60 "H_2O_{avg}	5.577 cf^{Δ}	76 $°F_{avg}$		1.00 "H_2O_{avg}

$cf^{\Delta} = V_m$ 5.589

$$\text{Wet Test Meter } VM_{std} = 17.65 \times 5.589 \frac{29.88 + \frac{-2.60}{13.6}}{74 + 460} \times 0.998 \; C_f = 5.473 \text{ scfm}$$

$$\text{Dry Gas Meter } VM_{std} = 17.65 \times 5.577 \frac{29.88 + \frac{1.00}{13.6}}{76 + 460} = 5.501 \text{ scfm}$$

$$\text{Calibration Factor } (C_{dg}) = \frac{\text{Wet Test Meter } VM_{std}}{\text{Dry Gas Meter } VM_{std}} \qquad C_{dg} = \frac{5.473}{5.501} = 0.995$$

QA/QC Check
Completeness ✓ Legibility ✓ Accuracy ✓ Specifications ✓ Reasonableness ✓

Checked by: [signature]

METCO ENVIRONMENTAL

DRY GAS METER CALIBRATION

Meter Number: 12-1

Wet Test Meter No: #7

Date: 4-8-10

Calibrator: David Moore

$$\text{Wet Test Meter } VM_{std} = 17.65 \times V_m \frac{P_b + \frac{P_m}{13.6}}{T_m + 460} \times C_f = ____ \text{ scfm}$$

$$\text{Dry Test Meter } VM_{std} = 17.65 \times V_m \frac{P_b + \frac{P_m}{13.6}}{T_m + 460} = ____ \text{ scfm}$$

Run No: 1 @ 1.50 "H_2O

P_b: 29.88 "Hg

Wet Test Meter C_f: ~~0.986~~ 0.998

Control Module Vacuum: 5.0 "Hg

	Wet Test Meter				Dry Gas Meter			
	Time	Meter Reading	T_m	P_m	Mete Reading	T_m Inlet	T_m Outlet	P_m
End	1436	10.821	74 °F	-3.90 "H_2O	830.292	86 °F	75 °F	1.50 "H_2O
Start	1422	0.000	74 °F	-3.90 "H_2O	819.417	81 °F	74 °F	1.50 "H_2O
	14	cf^{Δ}	74 $°F_{avg}$	-3.90 "H_2O_{avg}	10.875 cf^{Δ}		79 $°F_{avg}$	1.50 "H_2O_{avg}

$cf^{\Delta} = V_m$ 10.821

$$\text{Wet Test Meter } VM_{std} = 17.65 \times 10.821 \frac{29.88 + \frac{-3.90 \cancel{1.50}}{13.6}}{74 + 460} \times 0.998 \; C_f = 10.563 \text{ scfm}$$

$$\text{Dry Gas Meter } VM_{std} = 17.65 \times 10.875 \frac{29.88 + \frac{1.50}{13.6}}{79 + 460} = 10.680 \text{ scfm}$$

$$\text{Calibration Factor } (C_{dg}) = \frac{\text{Wet Test Meter } VM_{std}}{\text{Dry Gas Meter } VM_{std}} \qquad C_{dg} = \frac{10.563}{10.680} = 0.989$$

QA/QC Check
Completeness ✓ Legibility ✓ Accuracy ✓ Specifications ✓ Reasonableness ✓

Checked by: [signature]

METCO ENVIRONMENTAL

DRY GAS METER CALIBRATION

Meter Number: 12-1

Wet Test Meter No: #7

Date: 4-8-10

Calibrator: David Moore

$$\text{Wet Test Meter } VM_{std} = 17.65 \times V_m \frac{P_b + \frac{P_m}{13.6}}{T_m + 460} \times C_f = ____ \text{ scfm}$$

$$\text{Dry Test Meter } VM_{std} = 17.65 \times V_m \frac{P_b + \frac{P_m}{13.6}}{T_m + 460} = ____ \text{ scfm}$$

Run No: 1 @ 2.00 "H_2O

P_b: 29.88 "Hg

Wet Test Meter C_f: ~~0.986~~ 0.998

Control Module Vacuum: 5.0 "Hg

	Wet Test Meter				Dry Gas Meter			
	Time	Meter Reading	T_m	P_m	Mete Reading	T_m Inlet	T_m Outlet	P_m
End	1515	10.821	74 °F	-4.60 "H_2O	844.209	76 °F	88 °F	2.00 "H_2O
Start	1502	0.000	74 °F	-4.60 "H_2O	833.251	75 °F	86 °F	2.00 "H_2O
$cf^{\Delta} = V_m$	13	10.821 cf^{Δ}	74 $°F_{avg}$	-4.60 "H_2O_{avg}	10.958 cf^{Δ}		81 $°F_{avg}$	2.00 "H_2O_{avg}

$$\text{Wet Test Meter } VM_{std} = 17.65 \times 10.821 \frac{29.88 + \frac{-4.60}{13.6}}{74 + 460} \times 0.998 \; C_f = 10.545 \text{ scfm}$$

$$\text{Dry Gas Meter } VM_{std} = 17.65 \times 10.958 \frac{29.88 + \frac{2.00}{13.6}}{81 + 460} = 10.735 \text{ scfm}$$

$$\text{Calibration Factor } (C_{dg}) = \frac{\text{Wet Test Meter } VM_{std}}{\text{Dry Gas Meter } VM_{std}} \quad C_{dg} = \frac{10.545}{10.735} = 0.982$$

QA/QC Check
Completeness ✓ Legibility ✓ Accuracy ✓ Specifications ✓ Reasonableness ✓

Checked by: [signature]

METCO ENVIRONMENTAL

DRY GAS METER CALIBRATION

Meter Number: 12-1

Date: 4-8-10

Wet Test Meter No: #7

Calibrator: David Moore

$$\text{Wet Test Meter } VM_{std} = 17.65 \times V_m \frac{P_b + \frac{P_m}{13.6}}{T_m + 460} \times C_f = ____ \text{ scfm}$$

$$\text{Dry Test Meter } VM_{std} = 17.65 \times V_m \frac{P_b + \frac{P_m}{13.6}}{T_m + 460} = ____ \text{ scfm}$$

Run No: 1@ 3.00 "H_2O

P_b: 29.88 "Hg

Wet Test Meter C_f: ~~0.986~~ 0.998

Control Module Vacuum: 5.0 "Hg

	Wet Test Meter				Dry Gas Meter			
	Time	Meter Reading	T_m	P_m	Mete Reading	T_m Inlet	T_m Outlet	P_m
End	1549	11.088	74 °F	-6.40 "H_2O	871.875	78 °F	91 °F	3.00 "H_2O
Start	1539	0.000	74 °F	-6.40 "H_2O	860.760	77 °F	83 °F	3.00 "H_2O
		cf^{Δ}	74 °F$_{avg}$	-6.40 "H_2O_{avg}	11.115 cf^{Δ}		82 °F$_{avg}$	3.00 "H_2O_{avg}

$cf^{\Delta} = V_m$ 11.088

$$\text{Wet Test Meter } VM_{std} = 17.65 \times 11.088 \frac{29.88 + \frac{-6.40}{13.6}}{74 + 460} \times 0.998 \; C_f = 10.757 \text{ scfm}$$

$$\text{Dry Gas Meter } VM_{std} = 17.65 \times 11.115 \frac{29.88 + \frac{3.00}{13.6}}{82 + 460} = 10.895 \text{ scfm}$$

$$\text{Calibration Factor } (C_{dg}) = \frac{\text{Wet Test Meter } VM_{std}}{\text{Dry Gas Meter } VM_{std}} \quad C_{dg} = \frac{10.757}{10.895} = 0.987$$

QA/QC Check

Completeness ✓ Legibility ✓ Accuracy ✓ Specifications ✓ Reasonableness ✓

Checked by: [signature]

METCO ENVIRONMENTAL

DRY GAS METER CALIBRATION

Meter Number: 12-1

Date: 4-8-10

Wet Test Meter No: #7

Calibrator: David Moon

$$\text{Wet Test Meter } VM_{std} = 17.65 \times V_m \frac{P_b + \frac{P_m}{13.6}}{T_m + 460} \times C_f = ____ \text{ scfm}$$

$$\text{Dry Test Meter } VM_{std} = 17.65 \times V_m \frac{P_b + \frac{P_m}{13.6}}{T_m + 460} = ____ \text{ scfm}$$

Run No: 1@ 4.00 "H_2O

Wet Test Meter C_f: ~~0.986~~ 0.998

P_b: 29.88 "Hg

Control Module Vacuum: 5.0 "Hg

	Wet Test Meter				Dry Gas Meter			
	Time	Meter Reading	T_m	P_m	Mete Reading	T_m Inlet	T_m Outlet	P_m
End	1605	11.133	74 °F	-7.70 "H_2O	887.404	79 °F	91 °F	4.00 "H_2O
Start	1556	0.000	74 °F	-7.70 "H_2O	876.211	78 °F	91 °F	4.00 "H_2O
$cf^{\Delta} = V_m$	9	11.133 cf^{Δ}	74 °F$_{avg}$	-7.70 "H_2O_{avg}	11.193 cf^{Δ}	85 °F$_{avg}$		4.00 "H_2O_{avg}

$$\text{Wet Test Meter } VM_{std} = 17.65 \times 11.133 \frac{29.88 + \frac{-7.70}{13.6}}{74 + 460} \times 0.998 \; C_f = \frac{10.765}{\cancel{11.181}} \text{ scfm}$$

$$\text{Dry Gas Meter } VM_{std} = 17.65 \times 11.193 \frac{29.88 + \frac{4.00}{13.6}}{85 + 460} = 10.938 \text{ scfm}$$

$$\text{Calibration Factor } (C_{dg}) = \frac{\text{Wet Test Meter } VM_{std}}{\text{Dry Gas Meter } VM_{std}} \quad C_{dg} = \frac{10.765}{10.938} = 0.984$$

QA/QC Check
Completeness ✓ Legibility ✓ Accuracy ✓ Specifications ✓ Reasonableness ✓

Checked by: [signature]

STACK UNIT ORIFICE NO: ~~40513~~ 12-1 DATE: 04/09/10 CALIBRATED BY: D Moore CHECKED BY: M. Luckett

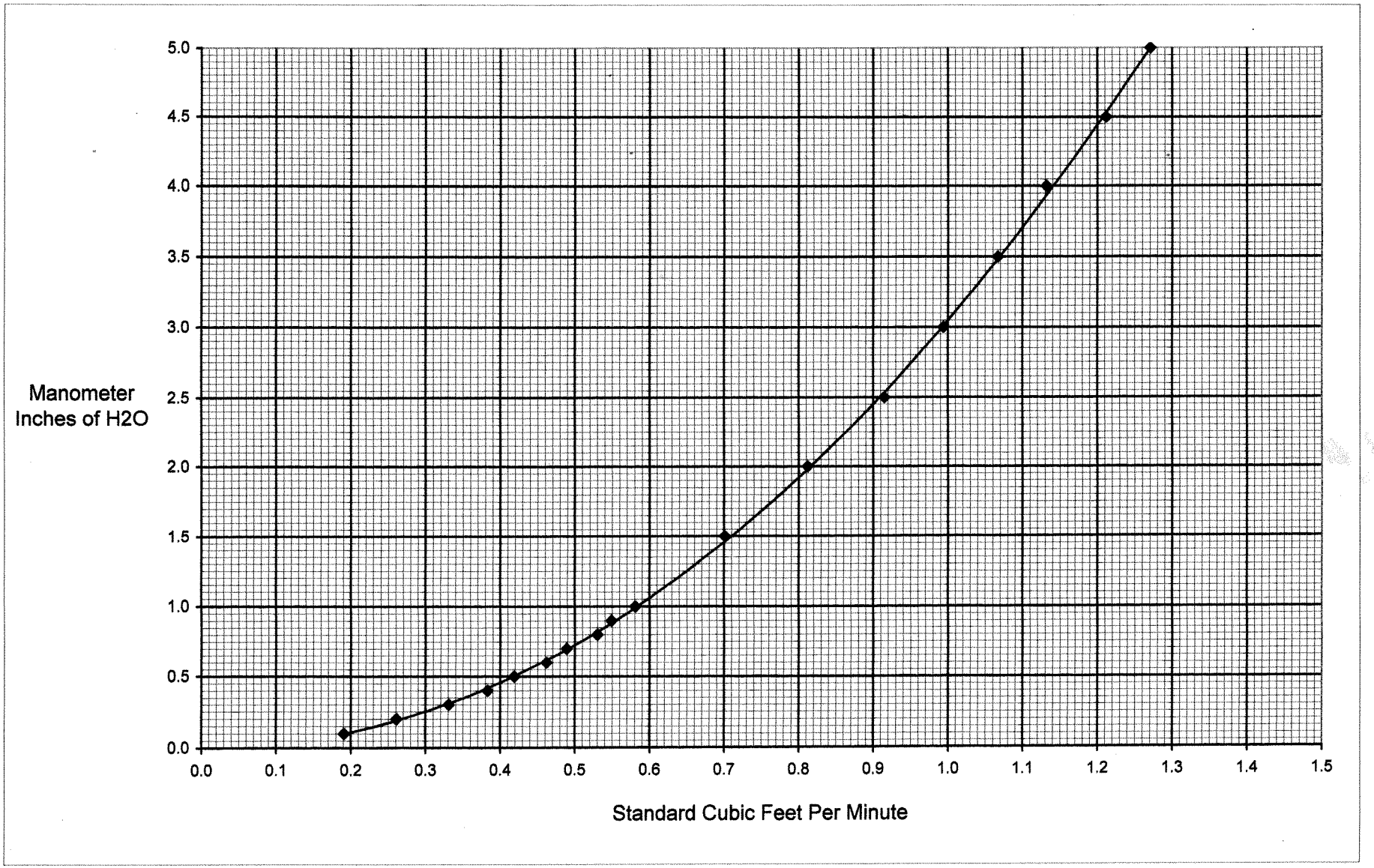

METCO ENVIRONMENTAL

Digital Temperature Indicator No. 12-1

Calibration Data

Date: 4-8-10

Reference Thermometer No. BR-09-2

Media	Time	Reference Thermometer (°F)	DTI (°F)
Ambient Air	1330	81	81
Ice Bath	1335	32	32
~~Boiling Water~~ Oven	1337	251	250
Oven	1341	300	300
Oven	1347	351	350
Oven	1353	375	375
~~Oven~~ Boiling Water	1334	212	212

Meter Adjusted? YES ____ NO ✓

Calibrator David Moon

Office: Baton Rouge, LA

QA/QC Check
Completeness ✓ Legibility ✓ Accuracy ✓ Specifications ✓ Reasonableness ✓

Checked by: J. LaCroix

METCO ENVIRONMENTAL

BAROMETER CALIBRATION

Baton Rouge Office Only

Barometer No. 43-2

Date: 3-16-10

Time: 09:40

Barometric Pressure@ **Baton Rouge Airport**@ 70 ft.	=	30.19
	-	0.070
Absolute Pressure @ **Baton Rouge Airport**	=	30.12
	+	0.044
Absolute Pressure @**METCO Baton Rouge**@ 26 ft	=	30.16
Barometer Reading	=	30.40
Variation	=	0.24

Barometer Adjusted? Yes ✓ No ____

Calibrator David Moon

QA/QC Check
Completeness ____ Legibility ____ Accuracy ____ Specifications ____ Reasonableness ____

Checked by: [illegible]

AIR LIQUIDE Air Liquide America Specialty Gases LLC Scott

RATA CLASS

Dual-Analyzed Calibration Standard

1290 COMBERMERE STREET, TROY, MI 48083 Phone: 248-589-2950 Fax: 248-589-2134

CERTIFICATE OF ACCURACY: EPA Protocol Gas

Assay Laboratory

AIR LIQUIDE AMERICA SPECIALTY GASES LLC
1290 COMBERMERE STREET
TROY, MI 48083

P.O. No.: 2351445
Project No.: 05-86119-005

Customer

TESTAMERICA AIR EMISSIONS DALLAS
PO# 2351445
3226 COMMANDER DR.
CARROLLTON TX 75006

ANALYTICAL INFORMATION

This certification was performed according to EPA Traceability Protocol For Assay & Certification of Gaseous Calibration Standards; Procedure G-1; September, 1997.

Cylinder Number: ALM062169 **Certification Date:** 23Mar2010 **Exp. Date:** 22Mar2012
Cylinder Pressure*:** 2015 PSIG

COMPONENT	CERTIFIED CONCENTRATION (Moles)		ANALYTICAL ACCURACY**	TRACEABILITY
NITRIC OXIDE	45.3	PPM	+/- 1%	Direct NIST and VSL
NITROGEN - OXYGEN FREE		BALANCE		
TOTAL OXIDES OF NITROGEN	45.3	PPM		Reference Value Only

*** Do not use when cylinder pressure is below 150 psig.

** Analytical accuracy is based on the requirements of EPA Protocol Procedure G1, September 1997.

REFERENCE STANDARD

TYPE/SRM NO.	EXPIRATION DATE	CYLINDER NUMBER	CONCENTRATION	COMPONENT
NTRM 1684 10	26Mar2011	AAL070636	98.40 PPM	NITRIC OXIDE

INSTRUMENTATION

INSTRUMENT/MODEL/SERIAL#	DATE LAST CALIBRATED	ANALYTICAL PRINCIPLE
FTIR//0928621	01Mar2010	FTIR

ANALYZER READINGS

(Z = Zero Gas R = Reference Gas T = Test Gas r = Correlation Coefficient)

First Triad Analysis

NITRIC OXIDE

Date: 16Mar2010	Response Unit:PPM	
Z1 = -0.00693	R1 = 98.70855	T1 = 45.55364
R2 = 98.77275	Z2 = 0.14639	T2 = 45.63822
Z3 = 0.19084	T3 = 45.74814	R3 = 98.77633
Avg. Concentration:	45.42	PPM

Second Triad Analysis

Date: 23Mar2010	Response Unit: PPM	
Z1 = -0.13371	R1 = 98.48332	T1 = 44.97514
R2 = 98.48866	Z2 = 0.00892	T2 = 45.09240
Z3 = 0.07370	T3 = 45.28348	R3 = 98.49474
Avg. Concentration:	45.09	PPM

Calibration Curve

Concentration = A + Bx + Cx2 + Dx3 + Ex4	
r = 9.99996E-1	
Constants:	A = 0.00000E+0
B = 9.98336E-1	C = 2.28000E-4
D = 0.00000E+0	E = 0.00000E+0

C-14 10-054G

APPROVED BY: _____
Rob McCrandall

AIR LIQUIDE | Air Liquide America Specialty Gases LLC | SCOTT™

RATA CLASS

Dual-Analyzed Calibration Standard

9810 BAY AREA BLVD, PASADENA, TX 77507 Phone: 281-474-5800 Fax: 281-474-5857

CERTIFICATE OF ACCURACY: EPA Protocol Gas

Assay Laboratory

AIR LIQUIDE AMERICA SPECIALTY GASES LLC
9810 BAY AREA BLVD
PASADENA, TX 77507

P.O. No.: 2297857
Project No.: 04-72372-001

Customer

TESTAMERICA AIR EMISSIONS BR

6655 COMPLEX DR
BATON ROUGE LA 70809

ANALYTICAL INFORMATION

This certification was performed according to EPA Traceability Protocol For Assay & Certification of Gaseous Calibration Standards; Procedure G-1; September, 1997.

Cylinder Number: BLM001094 **Certification Date:** 06Apr2009 **Exp. Date:** 06Apr2011
Cylinder Pressure*:** 1908 PSIG

COMPONENT	CERTIFIED CONCENTRATION (Moles)		ANALYTICAL ACCURACY**	TRACEABILITY
NITRIC OXIDE	94.9	PPM	+/- 1%	Direct NIST and NMi
NITROGEN - OXYGEN FREE		BALANCE		
TOTAL OXIDES OF NITROGEN	94.9	PPM		Reference Value Only

*** Do not use when cylinder pressure is below 150 psig.

** Analytical accuracy is based on the requirements of EPA Protocol Procedure G1, September 1997.

REFERENCE STANDARD

TYPE/SRM NO.	EXPIRATION DATE	CYLINDER NUMBER	CONCENTRATION	COMPONENT
NTRM 1684	15Oct2012	KAL004349	95.84 PPM	NITRIC OXIDE

INSTRUMENTATION

INSTRUMENT/MODEL/SERIAL#	DATE LAST CALIBRATED	ANALYTICAL PRINCIPLE
FTIR//000929060	04Apr2009	FTIR

ANALYZER READINGS

(Z = Zero Gas R = Reference Gas T = Test Gas r = Correlation Coefficient)

NITRIC OXIDE

First Triad Analysis

Date: 27Mar2009	Response Unit:PPM	
Z1 = -0.04588	R1 = 95.94204	T1 = 94.92757
R2 = 95.95381	Z2 = -0.01302	T2 = 95.06970
Z3 = 0.00185	T3 = 95.13094	R3 = 96.00021
Avg. Concentration:	94.92	PPM

Second Triad Analysis

Date: 06Apr2009	Response Unit: PPM	
Z1 = -0.04659	R1 = 95.94716	T1 = 94.95557
R2 = 96.06785	Z2 = 0.04541	T2 = 95.06577
Z3 = 0.05396	T3 = 95.10070	R3 = 96.15554
Avg. Concentration:	94.83	PPM

Calibration Curve

Concentration = A + Bx + Cx2 + Dx3 + Ex4	
r = 9.99998E-1	
Constants:	A = 0.00000E+0
B = 9.69477E-1	C = 1.83000E-4
D = 0.00000E+0	E = 0.00000E+0

C-15

10-054G

APPROVED BY: Ramien JR

AIR LIQUIDE | Air Liquide America Specialty Gases LLC | Scott

RATA CLASS

Dual-Analyzed Calibration Standard

1290 COMBERMERE STREET, TROY, MI 48083 Phone: 248-589-2950 Fax: 248-589-2134

CERTIFICATE OF ACCURACY: EPA Protocol Gas

Assay Laboratory

AIR LIQUIDE AMERICA SPECIALTY GASES LLC
1290 COMBERMERE STREET
TROY, MI 48083

P.O. No.: 2351445
Project No.: 05-86119-011

Customer

TESTAMERICA AIR EMISSIONS DALLAS
PO# 2351445
3226 COMMANDER DR.
CARROLLTON TX 75006

ANALYTICAL INFORMATION

This certification was performed according to EPA Traceability Protocol For Assay & Certification of Gaseous Calibration Standards; Procedure G-1; September, 1997.

Cylinder Number: ALM025404 **Certification Date:** 23Mar2010 **Exp. Date:** 22Mar2012
Cylinder Pressure*:** 1977 PSIG

COMPONENT	CERTIFIED CONCENTRATION (Moles)		ANALYTICAL ACCURACY**	TRACEABILITY
SULFUR DIOXIDE *	43.6	PPM	+/- 1%	Direct NIST and VSL
NITROGEN		BALANCE		

*** Do not use when cylinder pressure is below 150 psig.

** Analytical accuracy is based on the requirements of EPA Protocol Procedure G1, September 1997.

REFERENCE STANDARD

TYPE/SRM NO.	EXPIRATION DATE	CYLINDER NUMBER	CONCENTRATION	COMPONENT
NTRM 1693	01Dec2011	KAL004073	50.20 PPM	SULFUR DIOXIDE

INSTRUMENTATION

INSTRUMENT/MODEL/SERIAL#	DATE LAST CALIBRATED	ANALYTICAL PRINCIPLE
FTIR//0928621	11Mar2010	FTIR

ANALYZER READINGS

(Z = Zero Gas R = Reference Gas T = Test Gas r = Correlation Coefficient)

SULFUR DIOXIDE *

First Triad Analysis

Date: 16Mar2010 Response Unit:PPM

Z1 = -0.00552	R1 = 254.7546	T1 = 43.66502
R2 = 254.7698	Z2 = 0.01593	T2 = 43.68735
Z3 = 0.02422	T3 = 43.70994	R3 = 254.8348
Avg. Concentration:	43.80	PPM

Second Triad Analysis

Date: 23Mar2010 Response Unit: PPM

Z1 = -0.03748	R1 = 50.14900	T1 = 43.34492
R2 = 50.20179	Z2 = -0.02568	T2 = 43.38474
Z3 = -0.00937	T3 = 43.39759	R3 = 50.23640
Avg. Concentration:	43.38	PPM

Calibration Curve

Concentration = A + Bx + Cx2 + Dx3 + Ex4
r = 9.99997E-1

Constants:	A = 0.00000E+0
B = 1.02878E+0	C = 6.00000E-6
D = 0.00000E+0	E = 0.00000E+0

C-16

10-054G

APPROVED BY: _____
Rob McCrandall

AIR LIQUIDE Air Liquide America Specialty Gases LLC Scott

RATA CLASS

Dual-Analyzed Calibration Standard

1290 COMBERMERE STREET, TROY, MI 48083 Phone: 248-589-2950 Fax: 248-589-2134

CERTIFICATE OF ACCURACY: EPA Protocol Gas

Assay Laboratory

AIR LIQUIDE AMERICA SPECIALTY GASES LLC
1290 COMBERMERE STREET
TROY, MI 48083

P.O. No.: 2317759
Project No.: 05-78677-009

Customer

TESTAMERICA AIR EMISSIONS DALLAS

3226 COMMANDER DR.
CARROLLTON TX 75006

ANALYTICAL INFORMATION

This certification was performed according to EPA Traceability Protocol For Assay & Certification of Gaseous Calibration Standards; Procedure G-1; September, 1997.

Cylinder Number: BLM004038 **Certification Date:** 07Aug2009 **Exp. Date:** 07Aug2011
Cylinder Pressure*:** 1867 PSIG

COMPONENT	CERTIFIED CONCENTRATION (Moles)		ANALYTICAL ACCURACY**	TRACEABILITY
SULFUR DIOXIDE *	96.0	PPM	+/- 1%	Direct NIST and NMi
NITROGEN		BALANCE		

*** Do not use when cylinder pressure is below 150 psig.

** Analytical accuracy is based on the requirements of EPA Protocol Procedure G1, September 1997.

REFERENCE STANDARD

TYPE/SRM NO.	EXPIRATION DATE	CYLINDER NUMBER	CONCENTRATION	COMPONENT
NTRM 1694 S	01Jun2012	KAL004124	100.4 PPM	SULFUR DIOXIDE

INSTRUMENTATION

INSTRUMENT/MODEL/SERIAL#	DATE LAST CALIBRATED	ANALYTICAL PRINCIPLE
FTIR//0928621	30Jul2009	FTIR

ANALYZER READINGS

(Z = Zero Gas R = Reference Gas T = Test Gas r = Correlation Coefficient)

SULFUR DIOXIDE *

First Triad Analysis

Date: 31Jul2009	Response Unit:PPM	
Z1 = -0.02501	R1 = 253.6056	T1 = 95.85910
R2 = 253.5341	Z2 = 0.03227	T2 = 95.80975
Z3 = 0.13712	T3 = 95.76014	R3 = 253.7523
Avg. Concentration:	96.48	PPM

Second Triad Analysis

Date: 07Aug2009	Response Unit: PPM	
Z1 = -0.05606	R1 = 100.3157	T1 = 95.66700
R2 = 100.4961	Z2 = -0.00411	T2 = 95.45391
Z3 = -0.00082	T3 = 95.51535	R3 = 100.5421
Avg. Concentration:	95.50	PPM

Calibration Curve

Concentration = A + Bx + Cx2 + Dx3 + Ex4	
r = 9.99996E-1	
Constants:	A = 0.00000E+0
B = 1.00468E+0	C = 8.00000E-6
D = 0.00000E+0	E = 0.00000E+0

C-17 10-054G

APPROVED BY: _____
Rob McCrandall

AIR LIQUIDE | Air Liquide America Specialty Gases LLC | SCOTT™

RATA CLASS

Dual-Analyzed Calibration Standard

1290 COMBERMERE STREET, TROY, MI 48083 Phone: 248-589-2950 Fax: 248-589-2134

CERTIFICATE OF ACCURACY: EPA Protocol Gas

Assay Laboratory

AIR LIQUIDE AMERICA SPECIALTY GASES LLC
1290 COMBERMERE STREET
TROY, MI 48083

P.O. No.: 2342492
Project No.: 05-83987-001

Customer

TESTAMERICA AIR EMISSIONS DALLAS

3226 COMMANDER DR.
CARROLLTON TX 75006

ANALYTICAL INFORMATION

This certification was performed according to EPA Traceability Protocol For Assay & Certification of Gaseous Calibration Standards; Procedure G-1; September, 1997.

Cylinder Number: ALM051832 **Certification Date:** 21Jan2010 **Exp. Date:** 20Jan2013
Cylinder Pressure*:** 2000 PSIG

COMPONENT	CERTIFIED CONCENTRATION (Moles)		ANALYTICAL ACCURACY**	TRACEABILITY
CARBON MONOXIDE	42.9	PPM	+/- 1%	Direct NIST and VSL
NITROGEN		BALANCE		

*** Do not use when cylinder pressure is below 150 psig.

** Analytical accuracy is based on the requirements of EPA Protocol Procedure G1, September 1997.

REFERENCE STANDARD

TYPE/SRM NO.	EXPIRATION DATE	CYLINDER NUMBER	CONCENTRATION	COMPONENT
NTRM 1679 1	02Oct2010	KAL003109	101.0 PPM	CARBON MONOXIDE

INSTRUMENTATION

INSTRUMENT/MODEL/SERIAL#	DATE LAST CALIBRATED	ANALYTICAL PRINCIPLE
SIEMENS I/ULTRAMAT 6E/N1-VN-0545	19Jan2010	NDIR

ANALYZER READINGS

(Z=Zero Gas R=Reference Gas T=Test Gas r=Correlation Coefficient)

CARBON MONOXIDE

First Triad Analysis

Date: 14Jan2010 Response Unit:MV

Z1=0.00000	R1=101.2000	T1=41.84000
R2=101.2000	Z2=0.00000	T2=41.84000
Z3=0.00000	T3=41.84000	R3=101.2000

Avg. Concentration: 42.99 PPM

Second Triad Analysis

Date: 21Jan2010 Response Unit: MV

Z1=0.00000	R1=101.8000	T1=42.10000
R2=101.8000	Z2=0.00000	T2=42.12000
Z3=0.00000	T3=42.12000	R3=101.8000

Avg. Concentration: 42.71 PPM

Calibration Curve

Concentration=A+Bx+Cx2+Dx3+Ex4
r=0.999995

Constants:	A=0.025899196
B=1.055063914	C=-0.0010113
D=0.000004502	E=0

C-18

10-054G

APPROVED BY: _____
JEFF CROTEAU

AIR LIQUIDE Air Liquide America Specialty Gases LLC Scott

RATA CLASS

Dual-Analyzed Calibration Standard

1290 COMBERMERE STREET, TROY, MI 48083 Phone: 248-589-2950 Fax: 248-589-2134

CERTIFICATE OF ACCURACY: EPA Protocol Gas

Assay Laboratory

P.O. No.: 2351445

AIR LIQUIDE AMERICA SPECIALTY GASES LLC Project No.: 05-86119-002
1290 COMBERMERE STREET
TROY, MI 48083

Customer

TESTAMERICA AIR EMISSIONS DALLAS
PO# 2351445
3226 COMMANDER DR.
CARROLLTON TX 75006

ANALYTICAL INFORMATION

This certification was performed according to EPA Traceability Protocol For Assay & Certification of Gaseous Calibration Standards; Procedure G-1; September, 1997.

Cylinder Number: ALM055827 **Certification Date:** 24Mar2010 **Exp. Date:** 23Mar2013
Cylinder Pressure*:** 2012 PSIG

COMPONENT	CERTIFIED CONCENTRATION (Moles)		ANALYTICAL ACCURACY**	TRACEABILITY
CARBON MONOXIDE	92.1	PPM	+/- 1%	Direct NIST and VSL
NITROGEN		BALANCE		

*** Do not use when cylinder pressure is below 150 psig.

** Analytical accuracy is based on the requirements of EPA Protocol Procedure G1, September 1997.

REFERENCE STANDARD

TYPE/SRM NO.	EXPIRATION DATE	CYLINDER NUMBER	CONCENTRATION	COMPONENT
	02Oct2010	KAL003166	25.21 PPM	CARBON MONOXIDE

INSTRUMENTATION

INSTRUMENT/MODEL/SERIAL#	DATE LAST CALIBRATED	ANALYTICAL PRINCIPLE
FTIR//0928621	11Mar2010	FTIR

ANALYZER READINGS

(Z = Zero Gas R = Reference Gas T = Test Gas r = Correlation Coefficient)

First Triad Analysis

CARBON MONOXIDE

Date: 17Mar2010	Response Unit:PPM	
Z1 = -0.04971	R1 = 240.4032	T1 = 92.28545
R2 = 240.8740	Z2 = 0.08633	T2 = 92.30380
Z3 = 0.32947	T3 = 92.33301	R3 = 240.8906
Avg. Concentration:	92.26	PPM

Second Triad Analysis

Date: 24Mar2010	Response Unit: PPM	
Z1 = 0.02430	R1 = 25.21857	T1 = 91.97152
R2 = 25.27666	Z2 = 0.06108	T2 = 92.07794
Z3 = 0.07101	T3 = 92.19354	R3 = 25.37927
Avg. Concentration:	91.92	PPM

Calibration Curve

Concentration = A + Bx + Cx2 + Dx3 + Ex4	
r = 9.99992E-1	
Constants:	A = 0.00000E+0
B = 9.86517E-1	C = 7.77000E-4
D = 1.00000E-6	E = 0.00000E+0

C-19 10-054G

APPROVED BY: _____
Rob McCrandall

Scott Specialty Gases AIR LIQUIDE

Close Window | Save As | Print

11426 FAIRMONT PKWY, LA PORTE, TX 77571 Phone: 800-248-1427 Fax: 281-474-8419

RATA CLASS

Dual-Analyzed Calibration Standard

CERTIFICATE OF ACCURACY: EPA Protocol Gas

Assay Laboratory
AIR LIQUIDE AMERICA SPECIALTY GASES LLC
11426 FAIRMONT PKWY
LA PORTE, TX 77571

P.O. No.: 2342494
Project No.: 04 -79849 -005

Customer
TESTAMERICA AIR EMISSIONS BR
PO# 2342494
6655 COMPLEX DR
BATON ROUGE LA 70809

ANALYTICAL INFORMATION

This certification was performed according to EPA Traceability Protocol For Assay & Certification of Gaseous Calibration Standards; Procedure G-1; September, 1997.

Cylinder Number: BAL445
Cylinder Pressure*:** 2000 PSIG

Certification Date: 26Jan2010

Exp. Date: 25Jan2013
Batch No: LAP0008416

COMPONENT	CERTIFIED CONCENTRATION (Moles)	ACCURACY**	TRACEABILITY
PROPANE	26.3 PPM	+/- 1%	Direct NIST and VSL
NITROGEN	BALANCE		

*** Do not use when cylinder pressure is below 150 psig.
** Analytical accuracy is based on the requirements of EPA Protocol Procedure G1, September 1997.

REFERENCE STANDARD

TYPE/SRM NO.	EXPIRATION DATE	CYLINDER NUMBER	CONCENTRATION	COMPONENT
NTRM 1668	02Oct2012	ALM013540	98.80 PPM	PROPANE

INSTRUMENTATION

INSTRUMENT/MODEL/SERIAL#	DATE LAST CALIBRATED	ANALYTICAL PRINCIPLE
HP-Y/HP 6890/US00000974	25Jan2010	GAS CHROMATOGRAPHY

ANALYZER READINGS

(Z=Zero Gas R=Reference Gas T=Test Gas r=Correlation Coefficient)

First Triad Analysis
PROPANE
Date: 26Jan2010 Response Unit: PPM
Z1=0.00000 R1=34310.00 T1=9145.000
R2=34149.00 Z2=0.00000 T2=9163.000
Z3=0.00000 T3=9169.000 R3=34150.00
Avg. Concentration: 26.32 PPM

Second Triad Analysis

Calibration Curve

Concentration=A+Bx+Cx2+Dx3+Ex4
r=0.999996053
Constants: A=-0.14318826
B=0.002893401 C=
D= E=

Special Notes:
LAP0008416 FOLIO ITEM # 0920 ; DOC # 35971866

QUALITY ASSURANCE

APPROVED BY: ROGER NGUYEN
(signature on file)

Scott Specialty Gases AIR LIQUIDE

Close Window | Save As | Print

9810 BAY AREA BLVD, PASADENA, TX 77507 Phone: 281-474-5800 Fax: 281-474-5857

RATA CLASS

Dual-Analyzed Calibration Standard

CERTIFICATE OF ACCURACY: EPA Protocol Gas

Assay Laboratory
AIR LIQUIDE AMERICA SPECIALTY GASES LLC
9810 BAY AREA BLVD
PASADENA, TX 77507

P.O. No.: 2317758
Project No.: 04 -76033 -006

Customer
METCO ENVIRONMENTAL

PO BOX 598
ADDISON TX 75001

ANALYTICAL INFORMATION

This certification was performed according to EPA Traceability Protocol For Assay & Certification of Gaseous Calibration Standards; Procedure G-1; September, 1997.

Cylinder Number: 2L1152
Cylinder Pressure*:** 1940 PSIG

Certification Date: 27Aug2009

Exp. Date: 26Aug2012

COMPONENT	CERTIFIED CONCENTRATION (Moles)	ACCURACY**	TRACEABILITY
PROPANE	46.4 PPM	+/- 1%	Direct NIST and VS
NITROGEN	BALANCE		

*** Do not use when cylinder pressure is below 150 psig.
** Analytical accuracy is based on the requirements of EPA Protocol Procedure G1, September 1997.

REFERENCE STANDARD

TYPE/SRM NO.	EXPIRATION DATE	CYLINDER NUMBER	CONCENTRATION	COMP
NTRM 1668	02Oct2012	ALM020070	98.80 PPM	PROPA

INSTRUMENTATION

INSTRUMENT/MODEL/SERIAL#	DATE LAST CALIBRATED	ANALYTICAL PRINCIPLE
HP-Y/HP 6890/US00000974	26Aug2009	GAS CHROMATOGRAPHY

ANALYZER READINGS

(Z=Zero Gas R=Reference Gas T=Test Gas r=Correlation Coefficient)

First Triad Analysis
PROPANE
Date: 27Aug2009 Response Unit: PPM
Z1=0.00000 R1=1625318. T1=763865.0
R2=1625912. Z2=0.00000 T2=762829.0
Z3=0.00000 T3=762949.0 R3=1622791.
Avg. Concentration: 46.39 PPM

Second Triad Analysis

Calibration Curve

Concentration=A+Bx+Cx2+Dx3+Ex4
r=0.999994799
Constants: A=-0.04480346
B=6.07922E-05 C=
D= E=

Special Notes:
REPORT MOL %, EXPIRATION DATE, AND FOLIO ITEM # 0925

QUALITY ASSURANCE

APPROVED BY: ROGER NGUYEN
(signature on file)

Scott Specialty Gases AIR LIQUIDE

Close Window | Save As | Print

9810 BAY AREA BLVD, PASADENA, TX 77507 Phone: 281-474-5800 Fax: 281-474-5857

RATA CLASS

Dual-Analyzed Calibration Standard

CERTIFICATE OF ACCURACY: EPA Protocol Gas

Assay Laboratory
AIR LIQUIDE AMERICA SPECIALTY GASES LLC
9810 BAY AREA BLVD
PASADENA, TX 77507

P.O. No.: 2315107
Project No.: 04 -75719 -003

Customer
METCO ENVIRONMENTAL C/O AIR LIQUIDE

18222 E PETROLEUM DR
HOLD FOR PICK UP
BATON ROUGE LA 70809

ANALYTICAL INFORMATION

This certification was performed according to EPA Traceability Protocol For Assay & Certification of Gaseous Calibration Standards; Procedure G-1; September, 1997.

Cylinder Number: BLM001547
Cylinder Pressure*:** 1700 PSIG

Certification Date: 21Jul2009

Exp. Date: 20Jul2012

COMPONENT	CERTIFIED CONCENTRATION (Moles)	ACCURACY**	TRACEABILITY
PROPANE	85.3 PPM	+/- 1%	Direct NIST and V
NITROGEN	BALANCE		

*** Do not use when cylinder pressure is below 150 psig.
** Analytical accuracy is based on the requirements of EPA Protocol Procedure G1, September 1997.

REFERENCE STANDARD

TYPE/SRM NO.	EXPIRATION DATE	CYLINDER NUMBER	CONCENTRATION	COMP
NTRM 1668	02Oct2012	ALM020070	98.80 PPM	PROPA

INSTRUMENTATION

INSTRUMENT/MODEL/SERIAL#	DATE LAST CALIBRATED	ANALYTICAL PRINCIPLE
HP-Y/HP 6890/US00000974	02Jul2009	GAS CHROMATOGRAPHY

ANALYZER READINGS

(Z=Zero Gas R=Reference Gas T=Test Gas r=Correlation Coefficient)

First Triad Analysis
PROPANE
Date: 21Jul2009 Response Unit: PPM
Z1=0.00000 R1=1709003. T1=1474608.
R2=1707919. Z2=0.00000 T2=1478200.
Z3=0.00000 T3=1478936. R3=1714509.
Avg. Concentration: 85.33 PPM

Second Triad Analysis

Calibration Curve

Concentration=A+Bx+Cx2+Dx3+Ex4
r=0.999995919
Constants: A=0.017099961
B=5.95782E-05 C=
D= E=

QUALITY ASSURANCE

APPROVED BY: ROGER NGUYEN
(signature on file)

AIR LIQUIDE Air Liquide America Specialty Gases LLC SCOTT™

RATA CLASS

Dual-Analyzed Calibration Standard

1290 COMBERMERE STREET, TROY, MI 48083 Phone: 248-589-2950 Fax: 248-589-2134

CERTIFICATE OF ACCURACY: EPA Protocol Gas

Assay Laboratory

AIR LIQUIDE AMERICA SPECIALTY GASES LLC
1290 COMBERMERE STREET
TROY, MI 48083

P.O. No.: 2344516
Project No.: 05-84521-002

Customer

TESTAMERICA AIR EMISSIONS DALLAS

3226 COMMANDER DR.
CARROLLTON TX 75006

ANALYTICAL INFORMATION

This certification was performed according to EPA Traceability Protocol For Assay & Certification of Gaseous Calibration Standards; Procedure G-1; September, 1997.

Cylinder Number: ALM053591 **Certification Date:** 04Feb2010 **Exp. Date:** 03Feb2013
Cylinder Pressure*:** 2000 PSIG

COMPONENT	CERTIFIED CONCENTRATION (Moles)		ANALYTICAL ACCURACY**	TRACEABILITY
CARBON DIOXIDE	12.1	%	+/- 1%	Direct NIST and VSL
OXYGEN	11.8	%	+/- 1%	Direct NIST and VSL
NITROGEN		BALANCE		

*** Do not use when cylinder pressure is below 150 psig.

** Analytical accuracy is based on the requirements of EPA Protocol Procedure G1, September 1997.

REFERENCE STANDARD

TYPE/SRM NO.	EXPIRATION DATE	CYLINDER NUMBER	CONCENTRATION	COMPONENT
NTRM 2300	01Nov2010	1D002807	23.04 %	CARBON DIOXIDE
NTRM 2350	01Dec2011	K016398	23.20 %	OXYGEN

INSTRUMENTATION

INSTRUMENT/MODEL/SERIAL#	DATE LAST CALIBRATED	ANALYTICAL PRINCIPLE
PIR/2000/609015	04Feb2010	NDIR
CAI/110P/V03018	03Feb2010	PARAMAGNETIC

ANALYZER READINGS

(Z = Zero Gas R = Reference Gas T = Test Gas r = Correlation Coefficient)

First Triad Analysis **Second Triad Analysis** **Calibration Curve**

CARBON DIOXIDE

Date: 04Feb2010 Response Unit:MV

Z1 = 0.00000	R1 = 100.0000	T1 = 69.30000
R2 = 100.0000	Z2 = 0.00000	T2 = 69.30000
Z3 = 0.00000	T3 = 69.30000	R3 = 100.0000

Avg. Concentration: 12.15 %

Concentration = A + Bx + Cx2 + Dx3 + Ex4
r = 0.999988

Constants:	A = 0.003166868
B = 0.196622008	C = -0.0017708
D = 2.11187E-05	E = 0

OXYGEN

Date: 04Feb2010 Response Unit:%

Z1 = 0.00000	R1 = 23.20000	T1 = 11.83000
R2 = 23.20000	Z2 = 0.00000	T2 = 11.84000
Z3 = 0.00000	T3 = 11.84000	R3 = 23.20000

Avg. Concentration: 11.84 %

Concentration = A + Bx + Cx2 + Dx3 + Ex4
r = 0.999999

Constants:	A = 0.001001252
B = 0.996540924	C = 0
D = 0	E = 0

C-23 10-054G

APPROVED BY: _____
JEFF CROTEAU

AIR LIQUIDE

Scott Specialty Gases
Air Liquide America Specialty Gases LLC

RATA CLASS

Dual-Analyzed Calibration Standard

9810 BAY AREA BLVD, PASADENA, TX 77507 Phone: 281-474-5800 Fax: 281-474-5857

CERTIFICATE OF ACCURACY: EPA Protocol Gas

Assay Laboratory

SCOTT SPECIALTY GASES
9810 BAY AREA BLVD
PASADENA, TX 77507

P.O. No.: 2255831
Project No.: 04-65801-001

Customer

METCO ENVIRONMENTAL

3226 COMMANDER DR
CARROLLTON TX 75006

ANALYTICAL INFORMATION

This certification was performed according to EPA Traceability Protocol For Assay & Certification of Gaseous Calibration Standards; Procedure G-1; September, 1997.

Cylinder Number: ALM013495 **Certification Date:** 15Jul2008 **Exp. Date:** 15Jul2011
Cylinder Pressure*:** 1950 PSIG

COMPONENT	CERTIFIED CONCENTRATION (Moles)		ANALYTICAL ACCURACY**	TRACEABILITY
CO2	20.1	%	+/- 1%	Direct NIST and NMi
O2	12.0	%	+/- 1%	Direct NIST and NMi
N2		BALANCE		

*** Do not use when cylinder pressure is below 150 psig.

** Analytical accuracy is based on the requirements of EPA Protocol Procedure G1, September 1997.

REFERENCE STANDARD

TYPE/SRM NO.	EXPIRATION DATE	CYLINDER NUMBER	CONCENTRATION	COMPONENT
NTRM 2000	01Jul2009	K025979	5.006 %	CO2
NTRM 2350	01May2009	K003567	23.48 %	O2

INSTRUMENTATION

INSTRUMENT/MODEL/SERIAL#	DATE LAST CALIBRATED	ANALYTICAL PRINCIPLE
MTIA/M200/171109	10Jul2008	GAS CHROMATOGRAPHY
SERVOMEX/MODEL 244A/701/716	07Jul2008	PARAMAGNETIC

ANALYZER READINGS

(Z = Zero Gas R = Reference Gas T = Test Gas r = Correlation Coefficient)

First Triad Analysis **Second Triad Analysis** **Calibration Curve**

CO2

Date: 15Jul2008 Response Unit:AREA
Z1 = 0.00000 R1 = 385227.0 T1 = 1538544.
R2 = 385249.0 Z2 = 0.00000 T2 = 1537915.
Z3 = 0.00000 T3 = 1538136. R3 = 385195.0
Avg. Concentration: 20.13 %

Concentration = A + Bx + Cx2 + Dx3 + Ex4
r = 0.999995
Constants: A = -0.03581836
B = .0000133 C =
D = E =

O2

Date: 16Jul2008 Response Unit:VOLTS
Z1 = 0.00000 R1 = 0.98890 T1 = 0.50430
R2 = 0.98900 Z2 = 0.00000 T2 = 0.50450
Z3 = 0.00000 T3 = 0.50470 R3 = 0.98900
Avg. Concentration: 11.96 %

Concentration = A + Bx + Cx2 + Dx3 + Ex4
r = 0.9999989
Constants: A = -.0052326
B = 23.82661705 C =
D = E =

Special Notes: FOLIO ITEM NUMBER: 0320

APPROVED BY: DAVID KELLY

C-24

10-054G

AIR LIQUIDE Air Liquide America Specialty Gases LLC Scott

Shipped From:
1290 COMBERMERE STREET
TROY MI 48083
Phone: 248-589-2950 Fax: 248-589-2134

CERTIFICATE OF ANALYSIS

TESTAMERICA AIR EMISSIONS DALLAS
PO# 2211227
3226 COMMANDER DR.

CARROLLTON TX 75006

PROJECT #: 05-77329-001
PO#: PO# 2211227
ITEM #: 0501022 AL
DATE: 11Jun2009

CYLINDER #: ALM057740
FILL PRESSURE: 02000 PSIG

PURE MATERIAL: AIR CAS# 132259-10-0

GRADE: HYDROCARBONFREE

PURITY: -

IMPURITY	MAXIMUM CONCENTRATIONS
O2	20 TO 21%
CO	0.5 PPM
CO2	1 PPM
H2O	5 PPM
THC(CH4)	0.1 PPM

ANALYST:

APPENDIX D

Field Testing Data

METCO ENVIRONMENTAL

Job Number 10-054 ✓
Job Name Marathon ✓
Run Number 1 ✓
Unit Unit 220 T.O. #1 ✓
Date 6/4/10 ✓
Operator Morris/Freeman/Nehring
Sample box No. H1 Meter Box No. 12-1 ✓

5 Field Data

Read and record at the start of each test point.

Purge to: –
Purge time: –
Pitot Leak Check Initial ✓ Final ✓

Ambient Temp. °F 80
Assumed Moisture % 10
Probe Length 10'
C Factor 2 → 43 ΔH to reference.
Initial Leak @ 15.5 "Hg = 0.000 cfm
Final Leak @ 10.0 "Hg = 0.000 cfm
Pitot Tips Damaged During Test? Yes (No)

Point	Clock Time	Dry Gas Meter, CF	ΔP_s "Pitot" "H_2O	Orifice ΔH "H_2O Desired	P_m Orifice ΔH "H_2O Actual	Pump Vacuum "Hg Gauge	T_s Stack Temp °F	Probe Temp °F	Oven Temp °F	Effluent Temp °F	T_m Dry Gas Temp °F Inlet	Dry Gas Temp °F Outlet	Remarks
B12	1146	565.327	0.06	1.30	1.30	4.5	568	258	255	69	69	71	
11	1149	567.13	0.06	1.30	1.30	4.5	575	257	254	65	69	72	
10	1152	569.23	0.06	1.30	1.30	4.5	579	260	255	64	69	73	
9	1155	571.31	0.05	1.10	1.10	4.0	584	260	258	63	69	73	
8	1158	573.22	0.07	1.50	1.50	5.0	586	261	255	60	70	74	
7	1201	575.54	0.07	1.50	1.50	5.0	585	258	256	60	69	74	
6	1204	577.51	0.06	1.30	1.30	5.0	585	255	257	59	70	75	
5	1207	579.64	0.06	1.30	1.30	5.0	589	254	257	56	70	76	
4	1210	581.70	0.04	0.87	0.87	4.0	586	256	259	56	71	77	
3	1213	583.88	0.05	1.10	1.10	4.0	586	257	258	57	70	77	
2	1216	585.81	0.04	0.87	0.87	4.0	580	255	261	58	71	78	
1	1219	587.76	0.04	0.87	0.87	4.0	578	256	262	60	71	78	
END	1222	589.884	–	–	–	–	–	–	–	–	–	–	LJ = 10.0 @ 0.000
A12	1230	590.135	0.06	1.30	1.30	4.5	572	258	260	66	71	76	r = 0.251
11	1233	592.04	0.05	1.10	1.10	4.0	578	260	263	66	71	77	
10	1236	594.21	0.06	1.30	1.30	4.0	584	261	261	65	71	78	
9	1239	595.94	0.06	1.30	1.30	4.0	583	258	260	64	71	78	
8	1242	597.81	0.06	1.30	1.30	4.0	590	259	256	60	71	78	

Pitot Tube Calibration Factor C_p 0.805 ✓
Volume Collected V_m ~~48.524~~ 48.276 ft^3 ✓
Water Collected V_w 107.2 ✓ ml
Time of Test T_t 72 ✓ min.
Stack Pressure P_s -0.3 ✓ "H_2O

Pitot Tube No. 30-10-3 ✓
Baro. Press. P_b 29.78 ✓ "Hg
Probe Tip Dia. D_n 0.488 ✓ in.
% CO_2 4.2 ✓ % CO 0.0 ✓
% O_2 3.8 ✓ % N_2 92.0 ✓

Barometer No. 43-2 ✓ Probe Tip No. 30-2 ✓
Total Volume of Leak Checks After Start: 0.251 ✓ ft^3
V_m = Dry Gas Meter Calibration Factor 0.989 ✓ x ~~49.064~~ 48.813
Area Stack A_s 5217 ✓ in^2
{Dry Gas Meter Reading ___ ft^3 – (T_t ___ min. X Leak Rate ___ cfm)}

QA/QC Check
Completeness ✓ Legibility ✓ Accuracy ✓ Specifications ✓ Reasonableness ✓ Checked by: [signature]

Version 2
1 February 2008

Impinger Box No. H1

Water Weight Gain

Impinger 1	Final Weight	854.3		Impinger 1	62.8
	Initial Weight	791.5			
	Increase			Impinger 2	26.4
Impinger 2	Final Weight	758.5		Impinger 3	11.2
	Initial Weight	732.1			
	Increase			Impinger 4	6.8
Impinger 3	Final Weight	658.0	V_w =	Impinger 5	
	Initial Weight	646.8	g SO_2 = -		
	Increase		V_w =	Impinger 6	
Impinger 4	Final Weight	968.8		Impinger 7	
	Initial Weight	962.0			
	Increase			Total	107.2 ✓ = V_w
Impinger 5	Final Weight		P_b = 29.78 ✓	$\%CO_2$ = 4.2 ✓	
	Initial Weight		V_m = ~~48.524~~ 48.276 ✓	$\%O_2$ = 7.8 ✓	
	Increase		V_w = 107.2 ✓	%CO = 0.0 ✓	
			P_m = 1.210 ✓	$\%N_2$ = 92.0 ✓	
Impinger 6	Final Weight		Avg ΔP = 0.056 ✓	A_n = 5217 ✓	
	Initial Weight			D_n = 0.488 ✓	
	Increase		Avg$\sqrt{\Delta P}$ = 0.235 ✓	T_t = 72 ✓	
			C_p = 0.805 ✓		
Impinger 7	Final Weight		P_s = -0.3 ✓ °H_2O	29.76 ✓ °Hg	
	Initial Weight		T_m = 74 ✓ °F	534 ✓ °R	
	Increase		T_s = 583 ✓ °F	1043 ✓ °R	

Moisture Content: %M = ~~9.57~~ 9.60 ✓ M_d = 0.9043 ✓ MW_d = 28.824 ✓ MW = 27.78 ✓

$$Vm_{std} = 17.65\ Vm \left[\frac{P_b + \frac{P_m}{13.6}}{T_m + 460}\right] = 17.65 \times \cancel{48.524}\ 48.276 \left[\frac{29.78 + \frac{1.210}{13.6}}{74 + 460}\right] = \cancel{47.905}\ 47.660 \text{ ft}^3 \quad 0.6682 \text{ scfm}$$

Vw_{gas} = 0.0472 x Vw = 0.0472 x 107.2 = 5.060 ✓ ft^3

% Moisture = $\frac{Vw_{gas}}{Vm_{std} + Vw_{gas}}$ x 100 = $\frac{5.060}{5.060 + \cancel{47.905}\ 47.660}$ x 100 = ~~9.57~~ 9.60 ✓ %

V_s = 5123.8 x 0.805 $\sqrt{\frac{1043}{27.78 \times 29.76}}$ x 0.235 = 1089 ✓ fpm

%I = $\frac{1,039 \times 1043 \times \cancel{47.905}\ 47.660}{0.9043 \times 29.76 \times 1089 \times 72 \times (0.488)^2}$ = 102.8 ✓ %

ACFM: 39436 ✓ 39,443

SCFM: 18035 ✓

%EA: 18.5 ✓

VERSION 1
22 OCTOBER 2002

Run Number 1 5 FIELD DATA

Unit Unit 220 T.O. #1

Date 6/4/10

Point	Clock Time	Dry Gas Meter, CF	ΔP_s "Pitot" "H_2O	Orifice ΔH "H_2O Desired	P_m Orifice ΔH "H_2O Actual	Pump Vacuum "Hg Gauge	T_s Stack Temp °F	Probe Temp °F	Oven Temp °F	Effluent Temp °F	T_m Dry Gas Temp °F Inlet	Dry Gas Temp °F Outlet	Remarks
A7	1245	599.76	0.07	1.50	1.50	5.0	587	260	259	59	71	79	
6	1248	602.01	0.07	1.50	1.50	5.0	592	258	263	57	72	79	
5	1251	604.14	0.06	1.30	1.30	4.5	586	259	265	58	71	80	
4	1254	606.22	0.06	1.30	1.30	5.0	589	257	261	61	71	80	
3	1257	608.41	0.05	1.10	1.10	4.0	585	259	262	60	71	81	
2	1300	610.35	0.04	0.87	0.87	4.0	583	258	260	59	72	81	
1	1303	612.55	0.04	0.87	0.87	4.0	580	259	264	58	72	81	
END	1306	614.391	—	—	—	—	—	—	—	—	—	—	

QA/QC Check
Completeness ✓ Legibility ✓ Accuracy ✓ Specifications ✓ Reasonableness ✓

Checked by: [signature]

Version 2
1 February 2008

METCO ENVIRONMENTAL

Job Number 10-054 ✓
Job Name Marathon ✓
Run Number 2 ✓
Unit Unit 220 T.O. #1
Date 8/4/10 ✓
Operator Morris/Freeman/Nehring
Sample box No. 43-2 Meter Box No. 12-1 ✓

5 Field Data

Read and record at the start of each test point.

Purge to: –
Purge time: –
Pitot Leak Check Initial ✓ Final ✓

Ambient Temp. °F 85
Assumed Moisture % 10
Probe Length 10'
C Factor 2 → 43 011 to reference.
Initial Leak @ 16.5 "Hg = 0.000 cfm
Final Leak @ 9.0 "Hg = 0.000 cfm
Pitot Tips Damaged During Test? Yes (No)

Point	Clock Time	Dry Gas Meter, CF	ΔP_s "Pitot" "H_2O	Orifice ΔH "H_2O Desired	P_m Orifice ΔH "H_2O Actual	Pump Vacuum "Hg Gauge	T_s Stack Temp °F	Probe Temp °F	Oven Temp °F	Effluent Temp °F	T_m Dry Gas Temp °F Inlet	Dry Gas Temp °F Outlet	Remarks
A12	1405	614.670	0.05	1.10	1.10	5.0	576	259	252	71	70	75	
11	1408	616.61	0.06	1.30	1.30	5.0	575	261	254	64	70	75	
10	1411	618.59	0.06	1.30	1.30	5.0	578	264	255	63	72	76	
9	1414	620.64	0.06	1.30	1.30	5.0	580	262	254	63	72	76	
8	1417	622.57	0.06	1.30	1.30	5.0	581	265	258	60	73	77	
7	1420	624.71	0.07	1.50	1.50	5.5	583	262	255	58	72	77	
6	1423	626.81	0.07	1.50	1.50	5.5	590	261	256	57	72	78	
5	1426	628.95	0.06	1.30	1.30	5.0	588	262	258	55	73	78	
4	1429	631.15	0.05	1.10	1.10	5.0	578	259	260	55	73	79	
3	1432	633.42	0.05	1.10	1.10	5.0	570	260	259	57	72	79	
2	1435	634.83	0.04	0.87	0.87	4.0	572	260	256	58	73	79	
1	1438	636.62	0.04	0.87	0.87	4.0	573	259	258	60	74	79	
END	1441	638.495	–	–	–	–	–	–	–	–	–	–	LVe 10.0 → 0.000
B12	1516	638.684	0.06	1.30	1.30	5.0	573	252	248	67	73	73	V = 0.189
11	1519	640.75	0.05	1.10	1.10	5.0	571	256	254	66	72	75	
10	1522	642.61	0.05	1.10	1.10	5.0	574	258	256	62	72	76	
9	1525	644.70	0.06	1.30	1.30	5.0	579	260	261	60	71	76	
8	1528	648.72	0.06	1.30	1.30	5.0	583	259	264	59	72	77	

Pitot Tube Calibration Factor C_p 0.805 ✓
Volume Collected V_m 48.176 ✓ ft^3
Water Collected V_w 106.5 ✓ ml
Time of Test T_t 72 ✓ min.
Stack Pressure P_s −0.3 ✓ "H_2O

Pitot Tube No. 30-10-3 ✓
Baro. Press. 29.76 ✓ "Hg
Probe Tip Dia. D_n 0.488 ✓ in.
% CO_2 ~~4.0~~ 4.1 ✓ % CO 0.0 ✓
% O_2 3.7 ✓ % N_2 92.2 ✓

Barometer No. 43-2 ✓ Probe Tip No. 30-2 ✓
Total Volume of Leak Checks After Start: 0.189 ✓ ft^3
V_m = Dry Gas Meter Calibration Factor 0.989 ✓ x 48.712
Area Stack A_s 5217 ✓ in^2
{Dry Gas Meter Reading – ft^3 – (T_t – min. X Leak Rate – cfm)}

QA/QC Check
Completeness ✓ Legibility ✓ Accuracy ✓ Specifications ✓ Reasonableness ✓ Checked by: [signature]

Version 2
1 February 2008

Impinger Box No. 43-2

Water Weight Gain

Impinger 1	Final Weight	801.3		Impinger 1	49.6
	Initial Weight	751.7			
	Increase			Impinger 2	26.3
Impinger 2	Final Weight	827.8		Impinger 3	3.8
	Initial Weight	801.5			
	Increase			Impinger 4	26.8
			V_w =		
Impinger 3	Final Weight	653.5	g SO_2 = -	Impinger 5	
	Initial Weight	649.7	V_w =		
	Increase			Impinger 6	
Impinger 4	Final Weight	987.8		Impinger 7	
	Initial Weight	961.0			
	Increase			Total	106.5 ✓ = V_w

Impinger 5	Final Weight		P_b =	29.76 ✓	$\%CO_2$ =	~~4.0~~ 4.1 ✓
	Initial Weight		V_m =	48.176 ✓	$\%O_2$ =	3.7 ✓
	Increase		V_w =	106.5 ✓	%CO =	0.0 ✓
			P_m =	1.230 ✓	$\%N_2$ =	93.3 ✓
Impinger 6	Final Weight		Avg ΔP =	0.057 ✓	A_n =	5217 ✓
	Initial Weight				D_n =	0.488 ✓
	Increase		Avg$\sqrt{\Delta P}$ =	0.237 ✓	T_1 =	72 ✓
			C_p =	0.805 ✓		
Impinger 7	Final Weight		P_s =	-0.3 ✓ "H_2O		29.74 ✓ "Hg
	Initial Weight		T_m =	75 ✓ °F		535 ✓ °R
	Increase		T_s =	580 ✓ °F		1040 ✓ °R

Moisture Content: %M = 9.58 ✓ M_d = 0.9042 ✓ MW_d = ~~28.788~~ 28.804 ✓ MW = ~~27.75~~ 27.77 ✓

$$Vm_{std} = 17.65\ Vm \left[\frac{P_b + \frac{P_m}{13.6}}{T_m + 460}\right] = 17.65 \times 48.176 \left[\frac{29.76 + \frac{1.230}{13.6}}{75 + 460}\right] = 47.443 \checkmark \text{ sft}^3 \quad 0.659 \checkmark \text{ scfm}$$

Vw_{gas} = 0.0472 x Vw = 0.0472 x 106.5 = 5.027 ✓ sft^3

% Moisture = $\frac{Vw_{gas}}{Vm_{std} + Vw_{gas}}$ x 100 = $\frac{5.027}{47.443 + 5.027}$ x 100 = 9.58 ✓ %

V_s = 5123.8 x 0.805 $\sqrt{\frac{1040}{29.74 \times \cancel{27.75}\ 27.77}}$ x 0.237 = 1097 ✓ fpm

ACFM: ~~39,757~~ 39,742 ✓

SCFM: 18201 ✓

%I = $\frac{1,039 \times 1040 \times 47.443}{0.9042 \times 29.74 \times 1097 \times 72 \times (0.488)^2}$ = ~~101.4~~ 101.3 ✓ %

%EA: 17.8

VERSION 1
22 OCTOBER 2002

Run Number 2 5 FIELD DATA

Unit Unit 220 T.O. #1

Date 6/4/10

Point	Clock Time	Dry Gas Meter, CF	ΔP_s "Pitot" "H_2O	Orifice ΔH "H_2O Desired	P_m Orifice ΔH "H_2O Actual	Pump Vacuum "Hg Gauge	T_s Stack Temp °F	Probe Temp °F	Oven Temp °F	Effluent Temp °F	T_m Dry Gas Temp °F Inlet	Dry Gas Temp °F Outlet	Remarks
B7	1531	648.68	0.07	1.50	1.50	5.5.	589	261	262	60	72	78	
6	1534	650.80	0.07	1.50	1.50	5.5	588	261	263	58	73	78	
5	1537	652.79	0.06	1.30	1.30	5.0	589	264	265	57	73	79	
4	1540	655.24	0.06	1.30	1.30	5.0	580	263	266	56	74	79	
3	1543	657.11	0.06	1.30	1.30	5.0	582	263	264	58	73	80	
2	1546	659.10	0.05	1.10	~~0.87~~ 1.10	5.0	579	259	263	60	74	80	
1	1549	661.44	0.04	0.87	0.87	4.5	577	260	265	62	74	81	
END	1552	663.571	—	—	—	—	—	—	—	—	—	—	

QA/QC Check
Completeness ✓ Legibility ✓ Accuracy ✓ Specifications ✓ Reasonableness ✓

Checked by: [signature]

Version 2
1 February 2008

METC● ENVIRONMENTAL

Job Number 10-054 ✓
Job Name Marathon ✓
Run Number 3 ✓
Unit Unit 220 T.O. #1
Date 6/4/10 ✓
Operator Morris/Freeman/Nehring
Sample box No. H1 Meter Box No. 12-1 ✓

5 Field Data

Read and record at the start of each test point.

Purge to: –
Purge time: –
Pitot Leak Check Initial ✓ Final ✓

Ambient Temp. °F 85
Assumed Moisture % 10
Probe Length 10'
C Factor 2 → 43ΔH to reference.
Initial Leak @ 15.5 "Hg = 0.000 cfm
Final Leak @ 9.5 "Hg = 0.000 cfm
Pitot Tips Damaged During Test? Yes (No)

Point	Clock Time	Dry Gas Meter, CF	ΔP_s "Pitot" "H_2O	Orifice ΔH "H_2O Desired	P_m Orifice ΔH "H_2O Actual	Pump Vacuum "Hg Gauge	T_s Stack Temp °F	Probe Temp °F	Oven Temp °F	Effluent Temp °F	T_m Dry Gas Temp °F Inlet	Dry Gas Temp °F Outlet	Remarks
B12	1629	664.130	0.05	1.10	1.10	4.5	570	252	254	68	74	75	
11	1632	666.21	0.06	1.30	1.30	5.0	574	255	256	64	~~76~~74	76	
10	1635	668.34	0.06	1.30	1.30	5.0	573	258	255	64	73	78	
9	1638	670.15	0.06	1.30	1.30	5.0	576	256	258	62	73	78	
8	1641	672.22	0.06	1.30	1.30	5.0	579	259	260	60	74	78	
7	1644	674.49	0.07	1.50	1.50	6.0	586	260	258	61	73	80	
6	1648	676.71	0.07	1.50	1.50	6.0	587	261	255	59	74	80	
5	1651	679.04	0.06	1.30	1.30	5.0	585	259	258	58	73	81	
4	1654	681.30	0.05	1.10	1.10	5.0	580	260	261	58	73	80	
3	1657	683.52	0.06	1.30	1.30	5.5	577	263	258	59	73	82	
2	1700	685.71	0.04	0.87	0.87	4.5	572	261	260	57	74	83	
1	1703	686.98	0.04	0.87	0.87	4.5	569	261	263	58	74	83	
END	1706	689.126	–	–	–	–	–	–	–	–	–	–	L✓ @ 10.0 → 0.000
A12	1712	689.305	0.04	0.87	0.87	4.0	568	263	260	64	~~81~~ 75	81	V = 0.179
11	1715	691.00	0.06	1.30	1.30	5.0	570	265	262	62	~~80~~ 75	80	
10	1718	693.31	0.06	1.30	1.30	5.0	577	264	264	60	76	81	
9	1721	694.94	0.06	1.30	1.30	6.0	581	267	265	58	76	82	
8	1724	896.89	0.07	1.50	1.50	6.0	583	267	266	58	76	81	

Pitot Tube Calibration Factor C_p 0.805 ✓
Volume Collected V_m 48.056 ✓ ft^3
Water Collected V_w 108.2 ✓ ml
Time of Test T_t 72 ✓ min.
Stack Pressure P_s -0.3 ✓ "H_2O

Pitot Tube No. 30-10-3 ✓
Baro. Press. P_b 29.73 ✓ "Hg
Probe Tip Dia. D_n 0.488 ✓ in.
% CO_2 4.1 ✓ % CO 0.0 ✓
% O_2 3.5 ✓ % N_2 92.4 ✓

Barometer No. 43-2 ✓ Probe Tip No. 30-2 ✓
Total Volume of Leak Checks After Start: 0.179 ✓ ft^3
V_m = Dry Gas Meter Calibration Factor 0.989 ✓ X 48.590
Area Stack A_s 5287 ✓ in^2
{Dry Gas Meter Reading – ft^3 – (T_t – min. X Leak Rate – cfm)}

QA/QC Check
Completeness ✓ Legibility ✓ Accuracy ✓ Specifications ✓ Reasonableness ✓ Checked by: [signature]

Version 2
1 February 2008

Impinger Box No. H1

			Water Weight Gain		
Impinger 1	Final Weight	853.2		Impinger 1	70.3
	Initial Weight	782.9			
	Increase			Impinger 2	75.3
Impinger 2	Final Weight	773.8		Impinger 3	2.4
	Initial Weight	758.5			
	Increase			Impinger 4	20.2
			V_w =		
Impinger 3	Final Weight	650.6	g SO_2 = -	Impinger 5	
	Initial Weight	648.2	V_w =		
	Increase			Impinger 6	
Impinger 4	Final Weight	990.3		Impinger 7	
	Initial Weight	970.1			
	Increase			Total	108.2 = V_w

Impinger 5	Final Weight		P_b =	29.73	%CO_2 =	4.1	
	Initial Weight		V_m =	48.056	%O_2 =	3.5	
	Increase		V_w =	108.2	%CO =	0.0	
			P_m =	1.228	%N_2 =	92.4	
Impinger 6	Final Weight		Avg ΔP =	0.057	A_n =	5217	
	Initial Weight				D_n =	0.488	
	Increase		Avg$\sqrt{\Delta P}$ =	0.237	T_1 =	72	
			C_p =	0.805			
Impinger 7	Final Weight		P_s =	-0.3	"H_2O	29.71	"Hg
	Initial Weight		T_m =	78	°F	538	°R
	Increase		T_s =	578	°F	1038	°R

Moisture Content: %M = 9.80 M_d = 0.9020 MW_d = 28.796 MW = 27.74

$$Vm_{std} = 17.65\ Vm \left[\frac{P_b + \frac{P_m}{13.6}}{T_m + 460}\right] = 17.65 \times 48.056 \left[\frac{29.73 + \frac{1.228}{13.6}}{78 + 460}\right] = \frac{47.013\ sft^3}{0.653\ scfm}$$

Vw_{gas} = 0.0472 x Vw = 0.0472 x 108.2 = 5.107 sft^3

% Moisture = $\frac{Vw_{gas}}{Vm_{std} + Vw_{gas}}$ x 100 = $\frac{5.107}{5.107 + 47.013}$ x 100 = 9.80 %

V_s = 5123.8 x 0.805 $\sqrt{\frac{1038}{29.71 \times 27.74}}$ x 0.237 = 1097 fpm

ACFM: 39746

SCFM: 18174

%I = $\frac{1,039 \times 1038 \times 47.013}{29.71 \times 0.9020 \times 1097 \times 72 \times (0.488)^2}$ = 100.6 %

%EA: 16.7

VERSION 1
22 OCTOBER 2002

Run Number 3 5 FIELD DATA

Unit Unit 220 T.O. #1

Date 6/4/10

Point	Clock Time	Dry Gas Meter, CF	ΔP_s "Pitot" "H_2O	Orifice ΔH "H_2O Desired	P_m Orifice ΔH "H_2O Actual	Pump Vacuum "Hg Gauge	T_s Stack Temp °F	Probe Temp °F	Oven Temp °F	Effluent Temp °F	T_m Dry Gas Temp °F Inlet	Dry Gas Temp °F Outlet	Remarks
A7	1727	899.01	0.07	1.50	1.50	6.0	591	260	258	57	74	83	
6	1730	701.21	0.06	1.30	1.30	5.5	589	259	255	55	75	84	
5	1733	703.00	0.05	1.10	1.10	5.0	584	256	257	58	75	83	
4	1736	705.21	0.06	1.30	1.30	6.0	578	260	259	60	74	84	
3	1739	706.64	0.06	1.30	1.30	6.0	573	264	258	61	74	84	
2	1742	708.81	0.05	1.10	1.10	5.5	574	260	254	60	75	84	
1	1745	710.75	0.04	0.87	0.87	5.0	569	260	256	59	75	84	
END	1748	712.899	—	—	—	—	—	—	—	—	—	—	

QA/QC Check
Completeness ✓ Legibility ✓ Accuracy ✓ Specifications ✓ Reasonableness ✓

Checked by: [signature]

Version 2
1 February 2008

PRELIMINARY VELOCITY TRAVERSE DATA
AND
SAMPLING LOCATION DATA

Job Number 10-054

Job Name Marathon

Sampling Location Unit 220 T.O. #1

Date 6/3/10 Time 1530

Stack Height 178 ft.

Sampling Port Height Above Ground 103 ft.

	Port A	Port B	Port C	Port D	Average
Port & Inside Diameter (in.)	91.5	91.5			91.5
Port & Wall Thickness (in.)	10	10			10
Inside Stack Diameter (in.)	81.5	81.5			81.5 ✓

Sampling Ports are 33 ft. 0 in. (4.86 ✓ stack diameters) downstream from disturbance (inlet, constriction, bend, expansion)

Sampling Ports are 25 ft. 0 in. (3.68 ✓ stack diameters) upstream from disturbance (outlet, constriction, bend, expansion)

Point Number	Percent Diameter	Distance from Ref. Point (decimal in.)	Distance from Ref. Point (fractional in.)	Port A $\Delta P/T_s/\alpha$	Port B $\Delta P/T_s/\alpha$	Port C $\Delta P/T_s/\alpha$	Port D $\Delta P/T_s/\alpha$
1	2.1	1.712	1 11/16 ✓	0.05 ~~0.07~~ / 579 - 3	0.05 / 574 0	/ /	/ /
2	6.7	5.461	5 7/16 ✓	0.05 / 572 / 2	0.06 / 578 0	/ /	/ /
3	11.8	9.617	9 5/8 ✓	0.05 / 586 0	0.05 / 585 / 0	/ /	/ /
4	17.7	14.426	14 7/16 ✓	0.06 / 590 / 0	0.06 / 591 / 0	/ /	/ /
5	25.0	20.375	20 3/8 ✓	0.06 / 593 / 2	0.07 / 593 / 2	/ /	/ /
6	35.6	29.014	29 ✓	0.08 / 591 / 3	0.08 / 592 / 0	/ /	/ /
7	64.4	52.486	52 1/2 ✓	0.08 / 590 / 0	0.08 / 590 / 3	/ /	/ /
8	75.0	61.125	61 1/8 ✓	0.09 / 586 / 0	0.09 / 589 / 0	/ /	/ /
9	82.3	67.075	67 1/12 (16) ✓	0.08 / 585 / 0	0.08 / 586 / 0	/ /	/ /
10	88.2	71.883	71 7/8 ✓	0.08 / 581 / 0	0.08 / 581 / 0	/ /	/ /
11	93.3	76.040	76 1/16 ✓	0.06 / 577 5	0.06 / 581 / 3	/ /	/ /
12	97.9	79.789	79 13/16 ✓	0.07 / 572 / 0	0.06 / 579 / 0	/ /	/ /
13				/ /	/ /	/ /	/ /
14				/ /	/ /	/ /	/ /
15				/ /	/ /	/ /	/ /
16				/ /	/ /	/ /	/ /
17				/ /	/ /	/ /	/ /
18				/ /	/ /	/ /	/ /
19				/ /	/ /	/ /	/ /
20				/ /	/ /	/ /	/ /
21				/ /	/ /	/ /	/ /
22				/ /	/ /	/ /	/ /
23				/ /	/ /	/ /	/ /
24				/ /	/ /	/ /	/ /

Pitot Tube No. 30-10-3 ✓

C_p = 0.805 ✓

P_b = 29.68 "Hg

P_s = -0.30 "H_2O _____ "Hg

A_s = 5217 ✓ in.^{2}

Average ΔP 0.068

Average $\Delta P^{1/2}$ 0.259

Average T_x 583 °F

Average α 0.96 ✓ degrees

APPENDIX E

Analytical Data

METCO Environmental

Particulate Analysis Summary

Job Number 10-54

Job Name Marathon

Location Garyville, La.

Date Analysis Completed 6-11-10

Unit Tested 220 Thermal Oxidizer #1

Run No.	1	2	3		
Particulate on Filter (mg)	1.1	0.2	0.0		
Particulate in Front Wash (mg)*	14.1	6.3	6.1		
MF (mg)	15.2	6.54	6.1		
Particulate in Impinger #1 (mg)					
MT (mg)					

M. Hunter
Analyst

* Less Acetone Residue

METCO Environmental

Particulate Analysis EPA Method 5

Stack Filters

Job Number 10-54

Job Name Marathon

Location Garyville, La.

Unit Tested Thermox #1

Desiccator Time In	920 6/9				
Desiccator Time Out	1048 6/10	1110 6/11			

Run No. 1	Filter No. G88V47				
Filter & Particulate + Tare Weight (g)					
Tare Weight (g)					
Filter & Particulate (g)	0.4258	0.4257 ✓			

Filter & Particulate Average (g) 0.4257

Initial Filter Weight (g) 0.4246

Total Particulate (mg) 1.1 ✓

Run No. 2	Filter No. G88V46				
Filter & Particulate + Tare Weight (g)					
Tare Weight (g)					
Filter & Particulate (g)	0.4206	0.4206	✓		

Filter & Particulate Average (g) 0.4206

Initial Filter Weight (g) 0.42045

Total Particulate (mg) ~~0.2~~ 0.19 ~~0.4~~ 06/16/1

Run No. 3	Filter No. G88V48				
Filter & Particulate + Tare Weight (g)					
Tare Weight (g)					
Filter & Particulate (g)	0.4317	0.4317	✓		

Filter & Particulate Average (g) 0.4317

Initial Filter Weight (g) 0.4317

Total Particulate (mg) 0.0 ✓

Run No.	Filter No.				
Filter & Particulate + Tare Weight (g)					
Tare Weight (g)					
Filter & Particulate (g)					

Mettler AE240

Filter & Particulate Average (g)

Initial Filter Weight (g)

Total Particulate (mg)

MB

Analyst

METCO Environmental

Particulate Analysis EPA Method 5

Front Wash

Job Number 10-54 Location Garyville, La

Job Name Marathon Unit Tested 0220 Thermoxy #1

Desiccator Time In	1015 6/10				
Desiccator Time Out	1402 6/10	1122 6/11			

Run No. 1	Volume (ml) 244				
Final Weight (g)	168.6351	168.6353	✓		
Initial Weight (g)	168.6210	168.6210			
Particulate Weight (g)	0.0141	0.0143			

Particulate Average (mg) 14.3
Less Acetone Blank (mg) 0.2
Total Particulate (mg) 14.1 ✓

Run No. 2	Volume (ml) 217				
Final Weight (g)	165.5616	165.5616	✓		
Initial Weight (g)	165.5551	165.5551			
Particulate Weight (g)	0.0065	0.0065			

Particulate Average (mg) 6.5
Less Acetone Blank (mg) 0.2
Total Particulate (mg) 6.3 ✓

Run No. 3	Volume (ml) 200				
Final Weight (g)	126.4952	126.4957	✓		
Initial Weight (g)	126.4894	126.4894			
Particulate Weight (g)	0.0058	0.0063			

Particulate Average (mg) 6.3
Less Acetone Blank (mg) 0.2
Total Particulate (mg) 6.1 ✓

Acetone Blank	Volume (ml) 199				
Final Weight (g)	124.0944	124.0945	✓		
Initial Weight (g)	124.0943	124.0943			
Difference (g)	0.0001	0.0002			

Mettler AE240

Average (mg) 0.2
* mg/l 1.0

* Note: If greater than 7.9 mg/l, use 7.9 mg/l.

MT
Analyst

MITECO ENVIRONMENTAL

LABORATORY QUALITY ASSURANCE DATA

BALANCE ID Mettler AE200
SN 37636 weights 0918079

DATE & TIME		100g STD	1.0g STD	0.5g STD	ANALYST	REMARKS
11:15 6/11	Actual (g)	100.0000	1.0000	0.5000	mt	
	Difference (mg)	0	0	0		
	Actual (g)					
	Difference (mg)					
	Actual (g)					
	Difference (mg)					
	Actual (g)					
	Difference (mg)					
	Actual (g)					
	Difference (mg)					
	Actual (g)					
	Difference (mg)					
	Actual (g)					
	Difference (mg)					
	Actual (g)					
	Difference (mg)					
	Actual (g)					
	Difference (mg)					
	Actual (g)					
	Difference (mg)					
	Actual (g)					
	Difference (mg)					
	Actual (g)					
	Difference (mg)					

MITECO ENVIRONMENTAL

LABORATORY QUALITY ASSURANCE DATA

BALANCE ID Mettler AE200
SN 37636 weights 0918079

DATE & TIME		100g STD	1.0g STD	0.5g STD	ANALYST	REMARKS
5/24/10 1340	Actual (g)	99.9999	1.0000	0.5000	mt	
	Difference (mg)	-0.1	0	0		
1035 5/25	Actual (g)	99.9998	1.0000	0.5000	mt	
	Difference (mg)	~~99.998~~ -0.2	0	0		
1018 5/26	Actual (g)	99.9999	1.0000	0.5000	mt	
	Difference (mg)	-0.1	0	0		
936 5/27	Actual (g)	100.0000	1.0000	0.5000	mt	
	Difference (mg)	0	0	0		
1130 5/28	Actual (g)	100.0000	1.0000	0.5000	mt	
	Difference (mg)	0	0	0		
6/1 1235	Actual (g)	100.0000	1.0000	0.5000	mt	
	Difference (mg)	0	0	0		
6/2 945	Actual (g)	100.0000	1.0000	0.5000	mt	
	Difference (mg)	0	0	0		
6/3 936	Actual (g)	99.9999	1.0000	0.5001	mt	
	Difference (mg)	-0.1	0	+0.1		
945 6/4	Actual (g)	99.9999	1.0000	0.5000	mt	
	Difference (mg)	-0.1	0	0		
1000 6/7	Actual (g)	99.9999	1.0000	0.5000	mt	
	Difference (mg)	-0.1	0	0		
922 6/8	Actual (g)	100.0000	1.0000	0.5000	mt	
	Difference (mg)	0	0	0		
6/9/10 941	Actual (g)	100.0000	1.0000	0.5000	mt	
	Difference (mg)	0	0	0		

METCO ENVIRONMENTAL

LABORATORY QUALITY ASSURANCE DATA

BALANCE ID Mettler AE240

SN K51852 weights 09180701

DATE & TIME		100g STD	1.0g STD	0.5g STD	ANALYST	REMARKS
920 6/8	Actual (g)	99.9999	1.0000	0.5000	MG	
	Difference (mg)	-0.1	0	0		
940 6/9	Actual (g)	100.0000	1.0001	0.5001	MG	
	Difference (mg)	0	+0.1	+0.1		
6/10 1650	Actual (g)	100.0000	1.0001	0.5000	MG	
	Difference (mg)	0	+0.1	0		
6/11 1115	Actual (g)	99.9999	1.0001	0.5001	MG	
	Difference (mg)	-0.1	+0.1	+0.1		
	Actual (g)					
	Difference (mg)					
	Actual (g)					
	Difference (mg)					
	Actual (g)					
	Difference (mg)					
	Actual (g)					
	Difference (mg)					
	Actual (g)					
	Difference (mg)					
	Actual (g)					
	Difference (mg)					
	Actual (g)					
	Difference (mg)					
	Actual (g)					
	Difference (mg)					

LABORATORY QUALITY ASSURANCE DATA

BALANCE ID Mettler AE240
SN K51852 weights 09180701

DATE & TIME		100g STD	1.0g STD	0.5g STD	ANALYST	REMARKS
5/19 1436	Actual (g)	99.9998	1.0000	0.5000	mk	
	Difference (mg)	-0.2	0	0		
5/20 1012	Actual (g)	99.9999	1.0000	0.5000	mk	mk not @ work 5/21
	Difference (mg)	-0.1	0	0		
5/24 1340	Actual (g)	99.9998	1.0000	0.5000	mk	
	Difference (mg)	-0.2	0	0		
1030 5/25	Actual (g)	99.9997	1.0000	0.5000	mk	
	Difference (mg)	-0.3	0	0		
5/26 1015	Actual (g)	99.9998	1.0000	0.5000	mk	
	Difference (mg)	-0.2	0	0		
935 5/27	Actual (g)	99.9998	1.0000	0.5000	mk	
	Difference (mg)	-0.2	0	0		
1130 5/28	Actual (g)	100.0000	1.0001	0.5000	mk	
	Difference (mg)	0	+0.1	0		
6/1/10 1235	Actual (g)	100.0000	1.0001	0.5000	mk	
	Difference (mg)	0	+0.1	0		
6/2/10 945	Actual (g)	99.9999	1.0000	0.5000	mk	
	Difference (mg)	-0.1	0	0		
6/3 935	Actual (g)	100.0001	1.0000	0.5000	mk	
	Difference (mg)	+0.1	0	0		
6/4 1015	Actual (g)	99.9998	1.0000	0.5000	mk	
	Difference (mg)	-0.2	0	0		
6/7 955	Actual (g)	99.9999	1.0000	0.5000	mk	
	Difference (mg)	-0.1	0	0		

Initial Stack Filter Weights

88mm G85 V Series

Dessicator

Analyst TMR

IN Date/ Time	12/30/08 /	/	/	/
OUT Date/ Time	/	/	/	/

1	0.4251	0.4247	0.	OUT 2 1/28/09
2	0.4217	0.4215	0.	
3	0.4225	0.4224	0.	
4	0.4224	0.4223	0.	
5	0.4232	0.4231	0.	
6	0.4244	0.4242	0.	
7	0.4206	0.4205	0.	
8	0.4217	0.4216	0.	
9	0.4137	0.4135	0.	
10	0.4243	0.4242	0.	
11	0.4218	0.4218	0.	OUT 1 1/26/09
12	0.4224	0.4223	0.	
13	0.4255	0.4256	0.	
14	0.4193	0.4191	0.	
15	0.4225	0.4224	0.	
16	0.4247	0.4246	0.	
17	0.4233	0.4232	0.	
18	0.4250	0.4250	0.	
19	0.4252	0.4252	0.	
~~20~~	0.4214	0.4213	0.	
~~21~~	0.4241	0.4240	0.	
~~22~~	0.4212	0.4212	0.	
~~23~~	0.4226	0.4226	0.	
~~24~~	0.4229	0.4225	0.	
25	0.4228	0.4228	0.	
~~26~~	0.4230	0.4229	0.	
~~27~~	0.4252	0.4253	0.	
~~28~~	0.4270	0.4271	0.	
~~29~~	0.4297	0.4296	0.	OUT 1 1/27/09
~~30~~	0.4264	0.4264	0.	
~~31~~	0.4245	0.4244	0.	
~~32~~	0.4255	0.4254	0.	
~~33~~	0.4250	0.4250	0.	
34	0.4210	0.4210	0.	
35	0.4267	0.4667	0.	
36	0.4287	0.4286	0.	
37	0.4192	0.4191	0.	OUT 2 1/29/09
38	0.4237	0.4236	0.	
39	0.4273	0.4272	0.	
40	0.4245	0.4245	0.	
41	0.4253	0.4252	0.	
42	0.4296	0.4295	0.	
43	0.4241	0.4241	0.	
44	0.4278	0.4277	0.	

45	0.4352	0.4352	0.	
46	0.4205	0.4205	0.	
~~47~~	0.4246	0.4246	0.	
~~48~~	0.4319	0.4317	0.	
49	0.4234	0.4234	0.	
~~50~~	0.4212	0.4212	0.	
~~51~~	0.4231	0.4232	0.	
~~52~~	0.4277	0.4277	0.	
~~53~~	0.4244	0.4243	0.	
54	0.4219	0.4219	0.	
55	0.4264	0.4263	0.	
56	0.4277	0.4276	0.	
57	0.4274	0.4273	0.	
58	0.4251	0.4250	0.	
59	0.4279	0.4278	0.	
60	0.4318	0.4316	0.	
61	0.4228	0.4227	0.	OUT 2 1/29/09
62	0.4293	0.4293	0.	
63	0.4280	0.4280	0.	
64	0.4261	0.4261	0.	
65	0.4278	0.4278	0.	
~~66~~	0.4268	0.4269	0.	
~~67~~	0.4239	0.4239	0.	
68	0.4287	0.4285	0.	
69	0.4274	0.4274	0.	
70	0.4207	0.4207	0.	
71	0.4286	0.4286	0.	
72	0.4258	0.4258	0.	
73	0.4237	0.4237	0.	
74	0.4302	0.4302	0.	OUT 1 1/27/08
75	0.4333	0.4333	0.	
76	0.4220	0.4221	0.	
77	0.4283	0.4283	0.	
78	0.4296	0.4296	0.	
79	0.4213	0.4213	0.	
80	0.4267	0.4267	0.	
81	0.4233	0.4234	0.	
82	0.4253	0.4253	0.	
83	0.4247	0.4247	0.	
84	0.4264	0.4263	0.	
~~85~~	0.4216	0.4217	0.	
86	0.4255	0.4254	0.	
87	0.4220	0.4219	0.	
88	0.4239	0.4238	0.	

89	0.4261	0.4261	0.	
90	0.4245	0.4244	0.	
91	0.4213	0.4213	0.	
92	0.4221	0.4221	0.	
93	0.4263	0.4263	0.	OUT 1 1/28/09
94	0.4220	0.4219	0.	
95	0.4235	0.4235	0.	
96	0.4251	0.4250	0.	
97	0.4233	0.4232	0.	
98	0.4207	0.4207	0.	
99	0.4270	0.4269	0.	
100	0.4231	0.4230	0.	
101	0.4201	0.4201	0.	
102	0.4240	0.4239	0.	
103	0.4202	0.4202	0.	OUT 2 1/29/09
104	0.4182	0.4181	0.	
105	0.4260	0.4260	0.	
106	0.4157	0.4156	0.	
107	0.4167	0.4166	0.	
108	0.4243	0.4241	0.	
109	0.4164	0.4164	0.	
110	0.4162	0.4163	0.	
111	0.4264	0.4264	0.	
112	0.4186	0.4186	0.	
113	0.4152	0.4153	0.	
114	0.4248	0.4249	0.	
115	0.4180	0.4179	0.	
116	0.4135	0.4135	0.	
117	0.4244	0.4243	0.	OUT 2 1/30/09
118	0.4205	0.4204	0.	
119	0.4243	0.4243	0.	
120	0.4241	0.4240	0.	
121	0.4185	0.4185	0.	
122	0.4213	0.4210	0.	
123	0.4216	0.4216	0.	
124	0.4190	0.4191	0.	
125	0.4196	0.4196	0.	
126	0.4195	0.4199	0.	
127	0.4189	0.4189	0.	
128	0.4187	0.4187	0.	OUT 1 1/29/09
129	0.4242	0.4243	0.	
130	0.4203	0.4203	0.	
131	0.4190	0.4191	0.	
132	0.4238	0.4236	0.	

APPENDIX F

Reference Method Monitors Data

Unit Number 220 Thermal Oxidizer Number 1 Stack (EQT0204)
Oxides of Nitrogen
Concentration

Run Number	Measured (ppm)	Adjusted (ppm*)
1	22.68	23.24
2	22.52	23.23
3	22.07	23.01

*Calculated according to equation 7E-5.

Unit Number 220 Thermal Oxidizer Number 1 Stack (EQT0204)
Sulfur Dioxide
Concentration

Run Number	Measured (ppm)	Adjusted (ppm*)
1	30.30	31.66
2	30.00	30.97
3	30.78	31.86

*Calculated according to equation 7E-5.

Unit Number 220 Thermal Oxidizer Number 1 Stack (EQT0204)
Carbon Monoxide
Concentration

Run Number	Measured (ppm)	Adjusted (ppm*)
1	9.90	9.84
2	13.46	13.45
3	14.11	14.06

*Calculated according to equation 7E-5.

Unit Number 220 Thermal Oxidizer Number 1 Stack (EQT0204)
Total Hydrocarbons
Concentration

Run Number	Measured (wet ppm)
1	< 0.01
2	< 0.01
3	< 0.01

Unit Number 220 Thermal Oxidizer Number 1 Stack (EQT0204)
Oxygen
Concentration

Run Number	Measured (%)	Adjusted (%*)
1	3.83	3.78
2	3.68	3.66
3	3.52	3.53

*Calculated according to equation 7E-5.

Unit Number 220 Thermal Oxidizer Number 1 Stack (EQT0204)
Carbon Dioxide
Concentration

Run Number	Measured (%)	Adjusted (%*)
1	4.15	4.15
2	4.00	4.05
3	4.06	4.12

*Calculated according to equation 7E-5.

Unit Number 220 Thermal Oxidizer Number 1 Stack (EQT0204)
Calibration Summary
Oxides of Nitrogen

Run Number	NO_x Calibration Initial Drift Check (ppm)	NO_x Calibration Final Drift Check (ppm)	NO_x Calibration Average (ppm)	NO_x Zero Initial Drift Check (ppm)	NO_x Zero Final Drift Check (ppm)	NO_x Zero Average (ppm)	Actual NO_x Calibration Value (ppm)	Actual NO_x Zero Value (ppm)
1	43.99	43.92	43.96	0.27	0.24	0.26	45.30	0.00
2	43.92	43.40	43.66	0.24	0.27	0.26	45.30	0.00
3	43.40	42.97	43.19	0.27	0.27	0.27	45.30	0.00

METCO ENVIRONMENTAL

Unit Number 220 Thermal Oxidizer Number 1 Stack (EQT0204)
Calibration Summary
Sulfur Dioxide

Run Number	SO_2 Calibration Initial Drift Check (ppm)	SO_2 Calibration Final Drift Check (ppm)	SO_2 Calibration Average (ppm)	SO_2 Zero Initial Drift Check (ppm)	SO_2 Zero Final Drift Check (ppm)	SO_2 Zero Average (ppm)	Actual SO_2 Calibration Value (ppm)	Actual SO_2 Zero Value (ppm)
1	41.04	41.51	41.28	1.03	1.32	1.18	43.60	0.00
2	41.51	41.79	41.65	1.32	1.54	1.43	43.60	0.00
3	41.79	41.42	41.61	1.54	1.26	1.40	43.60	0.00

METCO ENVIRONMENTAL

Unit Number 220 Thermal Oxidizer Number 1 Stack (EQT0204)
Calibration Summary
Carbon Monoxide

Run Number	CO Calibration Initial Drift Check (ppm)	CO Calibration Final Drift Check (ppm)	CO Calibration Average (ppm)	CO Zero Initial Drift Check (ppm)	CO Zero Final Drift Check (ppm)	CO Zero Average (ppm)	Actual CO Calibration Value (ppm)	Actual CO Zero Value (ppm)
1	42.88	42.61	42.75	0.15	0.09	0.12	42.90	0.00
2	42.61	42.64	42.63	0.09	0.18	0.14	42.90	0.00
3	42.64	42.65	42.65	0.18	0.19	0.19	42.90	0.00

METCO ENVIRONMENTAL

Unit Number 220 Thermal Oxidizer Number 1 Stack (EQT0204)
Calibration Summary
Oxygen

Run Number	O_2 Calibration Initial Drift Check (%)	O_2 Calibration Final Drift Check (%)	O_2 Calibration Average (%)	O_2 Zero Initial Drift Check (%)	O_2 Zero Final Drift Check (%)	O_2 Zero Average (%)	Actual O_2 Calibration Value (%)	Actual O_2 Zero Value (%)
1	11.69	11.66	11.68	0.13	0.12	0.13	11.80	0.00
2	11.66	11.56	11.61	0.12	0.10	0.11	11.80	0.00
3	11.56	11.50	11.53	0.10	0.10	0.10	11.80	0.00

METCO ENVIRONMENTAL

Unit Number 220 Thermal Oxidizer Number 1 Stack (EQT0204)
Calibration Summary
Carbon Dioxide

Run Number	CO_2 Calibration Initial Drift Check (%)	CO_2 Calibration Final Drift Check (%)	CO_2 Calibration Average (%)	CO_2 Zero Initial Drift Check (%)	CO_2 Zero Final Drift Check (%)	CO_2 Zero Average (%)	Actual CO_2 Calibration Value (%)	Actual CO_2 Zero Value (%)
1	12.16	12.06	12.11	0.02	-0.02	0.00	12.10	0.00
2	12.06	11.94	12.00	-0.02	-0.02	-0.02	12.10	0.00
3	11.94	11.95	11.95	-0.02	0.00	-0.01	12.10	0.00

METCO ENVIRONMENTAL

Unit Number 220 Thermal Oxidizer Number 1 Stack (EQT0204)
System Calibration Bias and Drift Data
Oxides of Nitrogen
Calibration Span = 94.90 ppm

	NO_x Calibration					NO_x Zero						
Run Number	Initial Response (ppm)	Initial Bias (%*)	Final Response (ppm)	Final Bias (%*)	Drift (%*)	Initial Response (ppm)	Initial Bias (%*)	Final Response (ppm)	Final Bias (%*)	Drift (%*)	Actual NO_x Calibration Value (ppm)	Actual NO_x Zero Value (ppm)
1	43.99	1.41	43.92	1.49	0.07	0.27	0.14	0.24	0.11	0.03	45.33	0.14
2	43.92	1.49	43.40	2.03	0.55	0.24	0.11	0.27	0.14	0.03	45.33	0.14
3	43.40	2.03	42.97	2.49	0.45	0.27	0.14	0.27	0.14	0.00	45.33	0.14

* PERCENT OF CALIBRATION SPAN

METCO ENVIRONMENTAL

Unit Number 220 Thermal Oxidizer Number 1 Stack (EQT0204)
System Calibration Bias and Drift Data
Sulfur Dioxide
Calibration Span = 96.00 ppm

	SO_2 Calibration					SO_2 Zero						
Run Number	Initial Response (ppm)	Initial Bias (%*)	Final Response (ppm)	Final Bias (%*)	Drift (%*)	Initial Response (ppm)	Initial Bias (%*)	Final Response (ppm)	Final Bias (%*)	Drift (%*)	Actual SO_2 Calibration Value (ppm)	Actual SO_2 Zero Value (ppm)
1	41.04	2.83	41.51	2.34	0.49	1.03	1.15	1.32	1.45	0.30	43.76	-0.07
2	41.51	2.34	41.79	2.05	0.29	1.32	1.45	1.54	1.68	0.23	43.76	-0.07
3	41.79	2.05	41.42	2.44	0.39	1.54	1.68	1.26	1.39	0.29	43.76	-0.07

* PERCENT OF CALIBRATION SPAN

METCO ENVIRONMENTAL

Unit Number 220 Thermal Oxidizer Number 1 Stack (EQT0204)
System Calibration Bias and Drift Data
Carbon Monoxide
Calibration Span = 92.10 ppm

	CO Calibration					CO Zero						
Run Number	Initial Response (ppm)	Initial Bias (%*)	Final Response (ppm)	Final Bias (%*)	Drift (%*)	Initial Response (ppm)	Initial Bias (%*)	Final Response (ppm)	Final Bias (%*)	Drift (%*)	Actual CO Calibration Value (ppm)	Actual CO Zero Value (ppm)
1	42.88	0.25	42.61	0.54	0.29	0.15	0.15	0.09	0.09	0.07	43.11	0.01
2	42.61	0.54	42.64	0.51	0.03	0.09	0.09	0.18	0.18	0.10	43.11	0.01
3	42.64	0.51	42.65	0.50	0.01	0.18	0.18	0.19	0.20	0.01	43.11	0.01

* PERCENT OF CALIBRATION SPAN

METCO ENVIRONMENTAL

Unit Number 220 Thermal Oxidizer Number 1 Stack (EQT0204)
System Calibration Bias and Drift Data
Oxygen
Calibration Span = 20.90 percent

	O_2 Calibration					O_2 Zero						
Run Number	Initial Response (%)	Initial Bias (%*)	Final Response (%)	Final Bias (%*)	Drift (%*)	Initial Response (%)	Initial Bias (%*)	Final Response (%)	Final Bias (%*)	Drift (%*)	Actual O_2 Calibration Value (%)	Actual O_2 Zero Value (%)
1	11.69	0.33	11.66	0.48	0.14	0.13	0.14	0.12	0.10	0.05	11.76	0.10
2	11.66	0.48	11.56	0.96	0.48	0.12	0.10	0.10	0.00	0.10	11.76	0.10
3	11.56	0.96	11.50	1.24	0.29	0.10	0.00	0.10	0.00	0.00	11.76	0.10

* PERCENT OF CALIBRATION SPAN

METCO ENVIRONMENTAL

Unit Number 220 Thermal Oxidizer Number 1 Stack (EQT0204)
System Calibration Bias and Drift Data
Carbon Dioxide
Calibration Span = 20.10 percent

		CO_2 Calibration					CO_2 Zero					Actual	Actual
Run Number	Initial Response (%)	Initial Bias (%*)	Final Response (%)	Final Bias (%*)	Drift (%*)	Initial Response (%)	Initial Bias (%*)	Final Response (%)	Final Bias (%*)	Drift (%*)	CO_2 Calibration Value (%)	CO_2 Zero Value (%)
1	12.16	1.19	12.06	0.70	0.50	0.02	0.25	-0.02	0.45	0.20	11.92	0.07
2	12.06	0.70	11.94	0.10	0.60	-0.02	0.45	-0.02	0.45	0.00	11.92	0.07
3	11.94	0.10	11.95	0.15	0.05	-0.02	0.45	0.00	0.35	0.10	11.92	0.07

* PERCENT OF CALIBRATION SPAN

METCO ENVIRONMENTAL

Unit Number 220 Thermal Oxidizer Number 1 Stack (EQT0204)
Analyzer Calibration Data
Oxides of Nitrogen

Date 06/04/10
Runs 1 - 3
Calibration Span = 94.90 ppm

Gas Range	Actual Calibration Value (ppm)	Analyzer Calibration Response (ppm)	Absolute Difference (ppm)	Difference (%*)
Low	0.00	0.14	0.14	0.15
Mid	45.30	45.33	0.03	0.03
High	94.90	94.87	0.03	0.03

* Percent of calibration span

Unit Number 220 Thermal Oxidizer Number 1 Stack (EQT0204)
Analyzer Calibration Data
Sulfur Dioxide

Date 06/04/10
Runs 1 - 3
Calibration Span = 96.00 ppm

Gas Range	Actual Calibration Value (ppm)	Analyzer Calibration Response (ppm)	Absolute Difference (ppm)	Difference (%*)
Low	0.00	-0.07	0.07	0.07
Mid	43.60	43.76	0.16	0.17
High	96.00	96.39	0.39	0.41

* Percent of calibration span

Unit Number 220 Thermal Oxidizer Number 1 Stack (EQT0204)
Analyzer Calibration Data
Carbon Monoxide

Date 06/04/10
Runs 1 - 3
Calibration Span = 92.10 ppm

Gas Range	Actual Calibration Value (ppm)	Analyzer Calibration Response (ppm)	Absolute Difference (ppm)	Difference (%*)
Low	0.00	0.01	0.01	0.01
Mid	42.90	43.11	0.21	0.23
High	92.10	92.11	0.01	0.01

* Percent of calibration span

Unit Number 220 Thermal Oxidizer Number 1 Stack (EQT0204)
Analyzer Calibration Data
Total Hydrocarbons

Date 06/04/10
Runs 1 - 3
Span = 100 ppm

Gas Range	Actual Calibration Value (ppm)	Analyzer Calibration Response (ppm)	Absolute Difference (ppm)	Difference (%*)
Zero	0.00	0.01	0.01	----
Low	26.30	26.37	0.07	0.27
Mid	46.40	46.52	0.12	0.26
High	85.30	85.33	0.03	----

* Percent of span gas

Unit Number 220 Thermal Oxidizer Number 1 Stack (EQT0204)
Analyzer Calibration Data
Oxygen

Date 06/04/10
Runs 1 - 3
Calibration Span = 20.90 %

Gas Range	Actual Calibration Value (%)	Analyzer Calibration Response (%)	Absolute Difference (%)	Difference (%*)
Low	0.00	0.10	0.10	0.48
Mid	11.80	11.76	0.04	0.19
High	20.90	20.87	0.03	0.14

* Percent of calibration span

Unit Number 220 Thermal Oxidizer Number 1 Stack (EQT0204)
Analyzer Calibration Data
Carbon Dioxide

Date 06/04/10
Runs 1 - 3
Calibration Span = 20.10 %

Gas Range	Actual Calibration Value (%)	Analyzer Calibration Response (%)	Absolute Difference (%)	Difference (%*)
Low	0.00	0.07	0.07	0.35
Mid	12.10	11.92	0.18	0.90
High	20.10	19.89	0.21	1.04

* Percent of calibration span

filename	6/3/2010	15:48:06	C:\Program Files\RM Plus\DATA\10-054 U220 TO1 Stack Test.csv									
testby1	METCO Environmental											
testby2	Baton Rouge Operations											
testby3	M 30											
testby4	Logan Nehring											
testfor1	Marathon											
testfor2	Garyville Site											
testfor3	Unit 220 Thermal Oxidizer #1 Stack											
testfor4	O2 CO2 SO2 CO NOx THC											
name			1 O2	2 CO2	3 NOx	4 CO	5 SO2	6 THC				
sn			FOL04909	FOL04909	628919043.00	618717294.00	205880.00	00051199-10				
offset			0.00	0.00	0.00	0.00	0.00	0.00				
fullscale			25.00	25.00	100.00	100.00	100.00	100.00				
train			1.00	1.00	1.00	1.00	1.00	1.00				
gastype			o2 3a	co2 3a	nox 20	co 10	so2 6c	thc 25a				
dcg1	6/4/2010	7:46:30	19.33	0.16	0.14	0.14	0.86	3.83	ALM037115/cg1	N2	0	0
dcg1	6/4/2010	7:46:45	10.31	0.18	0.14	0.13	0.95	3.41	ALM037115/cg1	N2	0	0
dcg1	6/4/2010	7:47:00	2.98	0.14	0.14	0.05	1.08	2.86	ALM037115/cg1	N2	0	0
dcg1	6/4/2010	7:47:15	0.59	0.11	0.14	-0.07	1.12	3.02	ALM037115/cg1	N2	0	0
dcg1	6/4/2010	7:47:30	0.10	0.10	0.14	-0.10	1.14	3.77	ALM037115/cg1	N2	0	0
dcg1	6/4/2010	7:47:45	0.09	0.10	0.15	-0.14	1.15	3.56	ALM037115/cg1	N2	0	0
dcg1	6/4/2010	7:48:00	0.10	0.09	0.15	-0.13	1.14	3.19	ALM037115/cg1	N2	0	0
dcg1	6/4/2010	7:48:15	0.10	0.09	0.14	0.06	1.14	3.14	ALM037115/cg1	N2	0	0
dcg1	6/4/2010	7:48:30	0.11	0.08	0.15	0.02	1.00	3.36	ALM037115/cg1	N2	0	0
dcg1	6/4/2010	7:48:45	0.11	0.08	0.15	0.02	-0.04	3.64	ALM037115/cg1	N2	0	0
dcg1	6/4/2010	7:49:00	0.10	0.07	0.15	-0.07	-0.01	3.90	ALM037115/cg1	N2	0	0
dcg1	6/4/2010	7:49:15	0.11	0.07	0.15	-0.07	-0.02	3.54	ALM037115/cg1	N2	0	0
dcg1	6/4/2010	7:49:30	0.10	0.07	0.15	-0.07	-0.05	4.52	ALM037115/cg1	N2	0	0
dcg1	6/4/2010	7:49:45	0.08	0.07	0.14	-0.05	-0.05	5.83	ALM037115/cg1	N2	0	0
dcg1	6/4/2010	7:50:00	0.09	0.07	0.15	-0.08	-0.05	6.91	ALM037115/cg1	N2	0	0
dcg1	6/4/2010	7:50:15	0.09	0.07	0.14	-0.03	-0.04	4.33	ALM037115/cg1	N2	0	0
dcg1	6/4/2010	7:50:30	0.09	0.07	0.14	-0.02	-0.01	3.62	ALM037115/cg1	N2	0	0
dcg1	6/4/2010	7:50:45	0.08	0.07	0.14	0.01	-0.03	3.24	ALM037115/cg1	N2	0	0
dcg1	6/4/2010	7:51:00	0.10	0.07	0.14	0.01	-0.07	3.12	ALM037115/cg1	N2	0	0
o2ezero1	6/4/2010	7:51:00	0.10	0.07	0.14	0.01	-0.07	3.12	ALM037115/cg1	N2	0	0
co2ezero1	6/4/2010	7:51:00	0.10	0.07	0.14	0.01	-0.07	3.12	ALM037115/cg1	N2	0	0
noxezero1	6/4/2010	7:51:00	0.10	0.07	0.14	0.01	-0.07	3.12	ALM037115/cg1	N2	0	0
coezero1	6/4/2010	7:51:00	0.10	0.07	0.14	0.01	-0.07	3.12	ALM037115/cg1	N2	0	0
so2ezero1	6/4/2010	7:51:00	0.10	0.07	0.14	0.01	-0.07	3.12	ALM037115/cg1	N2	0	0
dcg11	6/4/2010	7:51:30	8.14	0.08	0.14	-0.02	-0.02	3.09	ALM057740/cg11	O2	20.9	0
dcg11	6/4/2010	7:51:45	18.07	0.09	0.14	-0.03	-0.04	3.11	ALM057740/cg11	O2	20.9	0
dcg11	6/4/2010	7:52:00	18.32	0.07	0.13	-0.03	-0.06	3.06	ALM057740/cg11	O2	20.9	0
dcg11	6/4/2010	7:52:15	18.55	0.06	0.13	-0.05	-0.06	3.12	ALM057740/cg11	O2	20.9	0
dcg11	6/4/2010	7:52:30	18.57	0.06	0.14	-0.08	-0.05	3.13	ALM057740/cg11	O2	20.9	0
dcg11	6/4/2010	7:52:45	18.57	0.06	0.14	-0.07	-0.05	3.24	ALM057740/cg11	O2	20.9	0
dcg11	6/4/2010	7:53:00	18.58	0.06	0.13	-0.02	-0.06	3.09	ALM057740/cg11	O2	20.9	0
dcg11	6/4/2010	7:53:15	18.59	0.05	0.14	-0.01	-0.07	3.03	ALM057740/cg11	O2	20.9	0
dcg11	6/4/2010	7:53:30	19.10	0.05	0.14	-0.01	-0.09	2.89	ALM057740/cg11	O2	20.9	0
dcg11	6/4/2010	7:53:45	20.78	0.05	0.14	-0.03	-0.04	2.93	ALM057740/cg11	O2	20.9	0
dcg11	6/4/2010	7:54:00	20.76	0.04	0.13	-0.05	-0.05	2.98	ALM057740/cg11	O2	20.9	0
dcg11	6/4/2010	7:54:15	20.73	0.04	0.14	-0.10	-0.05	3.09	ALM057740/cg11	O2	20.9	0
dcg11	6/4/2010	7:54:30	20.73	0.04	0.13	-0.05	-0.06	2.80	ALM057740/cg11	O2	20.9	0
dcg11	6/4/2010	7:54:45	20.75	0.04	0.13	-0.10	-0.05	2.82	ALM057740/cg11	O2	20.9	0
dcg11	6/4/2010	7:55:00	20.86	0.04	0.13	-0.08	-0.02	2.77	ALM057740/cg11	O2	20.9	0
dcg11	6/4/2010	7:55:15	20.86	0.03	0.13	-0.03	-0.03	2.77	ALM057740/cg11	O2	20.9	0
dcg11	6/4/2010	7:55:30	20.87	0.03	0.13	-0.05	-0.04	2.76	ALM057740/cg11	O2	20.9	0
o2high1	6/4/2010	7:55:30	20.87	0.03	0.13	-0.05	-0.04	2.76	ALM057740/cg11	O2	20.9	0
dcg10	6/4/2010	7:57:30	21.78	0.12	0.12	0.16	-0.22	2.67	ALM013495/cg10	CO2	20.1 O2	12
dcg10	6/4/2010	7:57:45	16.76	2.14	0.12	0.11	0.05	2.72	ALM013495/cg10	CO2	20.1 O2	12
dcg10	6/4/2010	7:58:00	13.48	16.70	0.12	0.01	0.04	2.72	ALM013495/cg10	CO2	20.1 O2	12
dcg10	6/4/2010	7:58:15	13.54	20.25	0.13	0.02	0.01	2.63	ALM013495/cg10	CO2	20.1 O2	12
dcg10	6/4/2010	7:58:30	13.48	19.97	0.13	0.02	-0.01	2.58	ALM013495/cg10	CO2	20.1 O2	12
dcg10	6/4/2010	7:58:45	13.49	19.95	0.12	-0.02	-0.03	2.60	ALM013495/cg10	CO2	20.1 O2	12
dcg10	6/4/2010	7:59:00	13.48	19.92	0.12	-0.01	-0.01	2.62	ALM013495/cg10	CO2	20.1 O2	12
dcg10	6/4/2010	7:59:15	13.48	19.89	0.12	-0.04	-0.03	2.60	ALM013495/cg10	CO2	20.1 O2	12
co2high1	6/4/2010	7:59:15	13.48	19.89	0.12	-0.04	-0.03	2.60	ALM013495/cg10	CO2	20.1 O2	12
dcg9	6/4/2010	8:01:30	20.65	1.10	0.12	0.24	-0.21	2.58	ALM05391/cg9	O2	11.8 CO2	12.1
dcg9	6/4/2010	8:01:45	18.70	3.02	0.12	0.15	-0.11	2.61	ALM05391/cg9	O2	11.8 CO2	12.1
dcg9	6/4/2010	8:02:00	13.68	10.88	0.12	0.17	-0.05	2.60	ALM05391/cg9	O2	11.8 CO2	12.1
dcg9	6/4/2010	8:02:15	13.41	11.94	0.12	0.18	-0.02	2.61	ALM05391/cg9	O2	11.8 CO2	12.1
dcg9	6/4/2010	8:02:30	13.42	11.94	0.12	0.19	-0.01	2.73	ALM05391/cg9	O2	11.8 CO2	12.1
dcg9	6/4/2010	8:02:45	13.42	11.94	0.12	0.19	0.00	2.77	ALM05391/cg9	O2	11.8 CO2	12.1
dcg9	6/4/2010	8:03:00	13.44	11.94	0.12	0.21	-0.01	2.63	ALM05391/cg9	O2	11.8 CO2	12.1
dcg9	6/4/2010	8:03:15	12.23	11.94	0.12	0.17	-0.01	2.63	ALM05391/cg9	O2	11.8 CO2	12.1
dcg9	6/4/2010	8:03:30	11.75	11.93	0.12	0.15	-0.02	2.63	ALM05391/cg9	O2	11.8 CO2	12.1
dcg9	6/4/2010	8:03:45	11.74	11.94	0.12	0.19	-0.02	2.52	ALM05391/cg9	O2	11.8 CO2	12.1
dcg9	6/4/2010	8:04:00	11.75	11.93	0.12	0.19	-0.01	2.53	ALM05391/cg9	O2	11.8 CO2	12.1
dcg9	6/4/2010	8:04:15	11.77	11.93	0.12	0.21	0.01	2.47	ALM05391/cg9	O2	11.8 CO2	12.1
dcg9	6/4/2010	8:04:30	11.76	11.92	0.12	0.19	0.03	2.53	ALM05391/cg9	O2	11.8 CO2	12.1 ALM 53591
o2mid1	6/4/2010	8:04:30	11.76	11.92	0.12	0.19	0.03	2.53	ALM05391/cg9	O2	11.8 CO2	12.1
co2mid1	6/4/2010	8:04:30	11.76	11.92	0.12	0.19	0.03	2.53	ALM05391/cg9	O2	11.8 CO2	12.1
dcg8	6/4/2010	8:04:45	11.92	11.84	0.12	0.17	0.02	2.59	BLM004038/cg8	SO2	96	0
dcg8	6/4/2010	8:05:00	10.25	5.91	0.12	0.09	45.38	2.57	BLM004038/cg8	SO2	96	0
dcg8	6/4/2010	8:05:15	1.19	0.24	0.53	-0.11	89.95	2.61	BLM004038/cg8	SO2	96	0
dcg8	6/4/2010	8:05:30	0.10	0.02	0.60	-0.15	95.95	2.45	BLM004038/cg8	SO2	96	0
dcg8	6/4/2010	8:05:45	0.09	0.01	0.31	-0.14	97.08	2.41	BLM004038/cg8	SO2	96	0
dcg8	6/4/2010	8:06:00	0.08	0.01	0.28	-0.05	97.58	2.32	BLM004038/cg8	SO2	96	0
dcg8	6/4/2010	8:06:15	0.07	0.01	0.27	-0.01	97.86	2.38	BLM004038/cg8	SO2	96	0
dcg8	6/4/2010	8:06:30	0.07	0.01	0.27	-0.05	98.11	2.37	BLM004038/cg8	SO2	96	0
dcg8	6/4/2010	8:06:45	0.08	0.01	0.31	-0.01	98.29	2.56	BLM004038/cg8	SO2	96	0
dcg8	6/4/2010	8:07:00	0.11	0.00	0.27	0.00	97.20	2.88	BLM004038/cg8	SO2	96	0
dcg8	6/4/2010	8:07:15	0.09	0.00	0.27	-0.03	96.05	2.81	BLM004038/cg8	SO2	96	0
dcg8	6/4/2010	8:07:30	0.10	0.00	0.27	-0.05	96.19	2.68	BLM004038/cg8	SO2	96	0
dcg8	6/4/2010	8:07:45	0.11	0.00	0.27	-0.03	96.29	2.87	BLM004038/cg8	SO2	96	0
dcg8	6/4/2010	8:08:00	0.09	0.00	0.27	-0.03	96.39	2.90	BLM004038/cg8	SO2	96	0
so2high1	6/4/2010	8:08:00	0.09	0.00	0.27	-0.03	96.39	2.90	BLM004038/cg8	SO2	96	0
dcg7	6/4/2010	8:08:15	0.40	0.00	0.27	-0.05	91.25	2.51	ALM025404/cg7	SO2	43.6	0
dcg7	6/4/2010	8:08:30	1.13	0.00	0.27	-0.02	54.40	2.64	ALM025404/cg7	SO2	43.6	0
dcg7	6/4/2010	8:08:45	0.14	0.00	0.25	0.01	45.42	2.82	ALM025404/cg7	SO2	43.6	0
dcg7	6/4/2010	8:09:00	0.08	0.00	0.19	0.02	44.25	2.57	ALM025404/cg7	SO2	43.6	0
dcg7	6/4/2010	8:09:15	0.11	0.00	0.17	0.02	43.95	2.58	ALM025404/cg7	SO2	43.6	0

name			1 O2	2 CO2	3 NOx	4 CO	5 SO2	6 THC				
dcg7	6/4/2010	8:09:30	0.08	0.00	0.17	0.04	43.80	2.67	ALM025404/cg7	SO2	43.6	0
dcg7	6/4/2010	8:09:45	0.08	0.00	0.17	0.03	43.78	2.87	ALM025404/cg7	SO2	43.6	0
dcg7	6/4/2010	8:10:00	0.09	0.00	0.18	0.08	43.78	2.94	ALM025404/cg7	SO2	43.6	0
dcg7	6/4/2010	8:10:15	0.09	0.00	0.18	0.05	43.76	2.97	ALM025404/cg7	SO2	43.6	0
so2mid1	6/4/2010	8:10:15	0.09	0.00	0.18	0.05	43.76	2.97	ALM025404/cg7	SO2	43.6	0
dcg3	6/4/2010	8:10:45	7.24	0.01	0.16	0.01	26.16	2.58	BLM001094/cg3	NOx	94.9	0
dcg3	6/4/2010	8:11:00	12.00	0.09	0.17	0.01	8.72	2.66	BLM001094/cg3	NOx	94.9	0
dcg3	6/4/2010	8:11:15	0.93	0.06	18.45	0.11	2.32	2.76	BLM001094/cg3	NOx	94.9	0
dcg3	6/4/2010	8:11:30	0.10	0.01	52.15	0.19	0.95	2.87	BLM001094/cg3	NOx	94.9	0
dcg3	6/4/2010	8:11:45	0.10	0.01	95.14	0.27	0.54	2.84	BLM001094/cg3	NOx	94.9	0
dcg3	6/4/2010	8:12:00	0.10	0.01	95.52	0.23	0.37	2.64	BLM001094/cg3	NOx	94.9	0
dcg3	6/4/2010	8:12:15	0.10	0.01	95.66	0.28	0.26	2.81	BLM001094/cg3	NOx	94.9	0
dcg3	6/4/2010	8:12:30	0.09	0.01	95.75	0.25	0.21	2.81	BLM001094/cg3	NOx	94.9	0
dcg3	6/4/2010	8:12:45	0.11	0.01	95.52	0.26	0.13	2.91	BLM001094/cg3	NOx	94.9	0
dcg3	6/4/2010	8:13:00	0.10	0.01	94.74	0.27	0.10	2.98	BLM001094/cg3	NOx	94.9	0
dcg3	6/4/2010	8:13:15	0.10	0.00	94.81	0.32	0.09	2.80	BLM001094/cg3	NOx	94.9	0
dcg3	6/4/2010	8:13:30	0.11	0.00	94.85	0.30	0.10	3.05	BLM001094/cg3	NOx	94.9	0
dcg3	6/4/2010	8:13:45	0.11	0.01	94.88	0.25	0.11	3.10	BLM001094/cg3	NOx	94.9	0
dcg3	6/4/2010	8:14:00	0.06	0.00	94.84	0.21	0.06	3.09	BLM001094/cg3	NOx	94.9	0
dcg3	6/4/2010	8:14:15	0.08	0.00	94.87	0.21	0.10	3.07	BLM001094/cg3	NOx	94.9	0
dcg3	6/4/2010	8:14:30	0.10	0.00	94.87	0.23	0.08	2.95	BLM001094/cg3	NOx	94.9	0
noxhigh1	6/4/2010	8:14:30	0.10	0.00	94.87	0.23	0.08	2.95	BLM001094/cg3	NOx	94.9	0
dcg2	6/4/2010	8:16:30	19.16	0.09	0.28	0.21	0.18	2.81	BLM001094/cg2	NOx	45.3	0
dcg2	6/4/2010	8:16:45	12.68	0.11	0.23	0.23	0.21	2.79	BLM001094/cg2	NOx	45.3	0
dcg2	6/4/2010	8:17:00	1.00	0.06	0.43	0.23	0.18	2.83	BLM001094/cg2	NOx	45.3	0
dcg2	6/4/2010	8:17:15	0.11	0.03	28.68	0.17	0.14	2.98	BLM001094/cg2	NOx	45.3	0
dcg2	6/4/2010	8:17:30	0.11	0.02	43.00	0.12	0.10	2.96	BLM001094/cg2	NOx	45.3	0
dcg2	6/4/2010	8:17:45	0.11	0.02	43.97	0.10	0.04	2.90	BLM001094/cg2	NOx	45.3	0
dcg2	6/4/2010	8:18:00	0.10	0.02	46.94	0.10	0.01	2.95	BLM001094/cg2	NOx	45.3	0
dcg2	6/4/2010	8:18:15	0.08	0.01	69.91	0.12	-0.02	2.83	BLM001094/cg2	NOx	45.3	0
dcg2	6/4/2010	8:18:30	0.10	0.01	45.17	0.08	-0.04	2.94	BLM001094/cg2	NOx	45.3	0
dcg2	6/4/2010	8:18:45	0.11	0.00	45.20	0.10	-0.03	2.73	BLM001094/cg2	NOx	45.3	0
dcg2	6/4/2010	8:19:00	0.09	0.00	45.27	0.11	-0.02	2.76	BLM001094/cg2	NOx	45.3	0
dcg2	6/4/2010	8:19:15	0.09	0.00	45.33	0.09	0.01	2.77	BLM001094/cg2	NOx	45.3	0
noxmid1	6/4/2010	8:19:15	0.09	0.00	45.33	0.09	0.01	2.77	BLM001094/cg2	NOx	45.3	0
dcg6	6/4/2010	8:19:45	12.49	0.03	42.29	0.15	0.07	2.63	ALM055827/cg6	CO	92.1	0
dcg6	6/4/2010	8:20:00	16.83	0.06	29.92	0.72	0.11	2.70	ALM055827/cg6	CO	92.1	0
dcg6	6/4/2010	8:20:15	3.76	0.04	9.66	29.07	0.08	2.90	ALM055827/cg6	CO	92.1	0
dcg6	6/4/2010	8:20:30	0.14	0.02	2.15	63.86	0.05	2.65	ALM055827/cg6	CO	92.1	0
dcg6	6/4/2010	8:20:45	0.09	0.01	5.66	86.56	0.04	2.62	ALM055827/cg6	CO	92.1	0
dcg6	6/4/2010	8:21:00	0.07	0.01	5.78	90.85	0.02	2.62	ALM055827/cg6	CO	92.1	0
dcg6	6/4/2010	8:21:15	0.08	0.00	5.76	91.22	-0.04	2.65	ALM055827/cg6	CO	92.1	0
dcg6	6/4/2010	8:21:30	0.07	0.00	5.76	91.36	-0.01	2.59	ALM055827/cg6	CO	92.1	0
dcg6	6/4/2010	8:21:45	0.08	0.00	5.76	91.60	-0.01	2.59	ALM055827/cg6	CO	92.1	0
dcg6	6/4/2010	8:22:00	0.10	0.00	5.75	92.03	-0.01	3.30	ALM055827/cg6	CO	92.1	0
dcg6	6/4/2010	8:22:15	0.10	0.00	5.75	92.06	-0.02	3.12	ALM055827/cg6	CO	92.1	0
dcg6	6/4/2010	8:22:30	0.09	0.00	5.76	92.00	-0.02	2.79	ALM055827/cg6	CO	92.1	0
dcg6	6/4/2010	8:22:45	0.08	0.00	5.76	92.11	-0.01	2.64	ALM055827/cg6	CO	92.1	0
cohigh1	6/4/2010	8:22:45	0.08	0.00	5.76	92.11	-0.01	2.64	ALM055827/cg6	CO	92.1	0
dcg5	6/4/2010	8:23:15	10.56	0.02	5.74	75.79	0.02	2.57	ALM051832/cg5	CO	42.9	0
dcg5	6/4/2010	8:23:30	14.11	0.05	3.98	39.01	0.02	2.57	ALM051832/cg5	CO	42.9	0
dcg5	6/4/2010	8:23:45	1.51	0.03	0.47	26.73	-0.02	2.56	ALM051832/cg5	CO	42.9	0
dcg5	6/4/2010	8:24:00	0.12	0.01	0.33	35.28	-0.01	2.49	ALM051832/cg5	CO	42.9	0
dcg5	6/4/2010	8:24:15	0.11	0.01	0.27	42.09	-0.02	2.48	ALM051832/cg5	CO	42.9	0
dcg5	6/4/2010	8:24:30	0.10	0.01	0.27	42.93	-0.04	2.49	ALM051832/cg5	CO	42.9	0
dcg5	6/4/2010	8:24:45	0.12	0.00	0.27	43.17	-0.05	2.57	ALM051832/cg5	CO	42.9	0
dcg5	6/4/2010	8:25:00	0.06	0.00	0.27	43.06	-0.05	2.53	ALM051832/cg5	CO	42.9	0
dcg5	6/4/2010	8:25:15	0.05	0.00	0.26	43.07	-0.05	2.53	ALM051832/cg5	CO	42.9	0
dcg5	6/4/2010	8:25:30	0.07	0.00	0.23	43.11	-0.04	2.55	ALM051832/cg5	CO	42.9	0
comid1	6/4/2010	8:25:30	0.07	0.00	0.23	43.11	-0.04	2.55	ALM051832/cg5	CO	42.9	0
dcg4	6/4/2010	8:33:00	16.26	0.10	0.16	0.39	-0.33	2.75	NOX Conv/cg4	NOx	0	0
dcg4	6/4/2010	8:33:15	4.91	0.10	0.12	0.38	-0.34	2.88	NOX Conv/cg4	NOx	0	0
dcg4	6/4/2010	8:33:30	1.97	0.09	2.27	0.82	-0.33	2.91	NOX Conv/cg4	NOx	0	0
dcg4	6/4/2010	8:33:45	1.22	0.10	7.59	2.29	-0.32	2.74	NOX Conv/cg4	NOx	0	0
dcg4	6/4/2010	8:34:00	0.73	0.11	11.50	2.12	-0.33	2.70	NOX Conv/cg4	NOx	0	0
dcg4	6/4/2010	8:34:15	0.47	0.11	12.65	1.21	-0.33	2.71	NOX Conv/cg4	NOx	0	0
dcg4	6/4/2010	8:34:30	0.33	0.12	12.71	0.87	-0.34	2.77	NOX Conv/cg4	NOx	0	0
dcg4	6/4/2010	8:34:45	0.25	0.12	12.74	0.72	-0.33	2.83	NOX Conv/cg4	NOx	0	0
dcg4	6/4/2010	8:35:00	0.21	0.12	12.77	0.57	-0.32	2.74	NOX Conv/cg4	NOx	0	0
dcg4	6/4/2010	8:35:15	0.20	0.12	12.78	0.50	-0.34	2.80	NOX Conv/cg4	NOx	0	0
dcg4	6/4/2010	8:35:30	0.18	0.12	12.80	0.46	-0.28	2.81	NOX Conv/cg4	NOx	0	0
dcg4	6/4/2010	8:35:45	0.18	0.12	12.80	0.45	-0.29	2.78	NOX Conv/cg4	NOx	0	0
dcg4	6/4/2010	8:36:00	0.17	0.12	12.82	0.49	-0.29	2.75	NOX Conv/cg4	NOx	0	0
dcg4	6/4/2010	8:36:15	0.17	0.12	12.80	0.48	-0.29	2.77	NOX Conv/cg4	NOx	0	0
dcg4	6/4/2010	8:36:30	0.17	0.12	12.80	0.48	-0.29	2.83	NOX Conv/cg4	NOx	0	0
dcg4	6/4/2010	8:36:45	0.17	0.12	12.80	0.49	-0.26	2.83	NOX Conv/cg4	NOx	0	0
dcg4	6/4/2010	8:37:00	0.17	0.12	12.80	0.55	-0.25	2.74	NOX Conv/cg4	NOx	0	0
dcg4	6/4/2010	8:37:15	0.17	0.12	12.80	0.55	-0.25	2.81	NOX Conv/cg4	NOx	0	0
dcg4	6/4/2010	8:37:30	0.17	0.12	12.80	0.55	-0.25	2.76	NOX Conv/cg4	NOx	0	0
dcg4	6/4/2010	8:37:45	0.17	0.12	12.80	0.51	-0.26	2.73	NOX Conv/cg4	NOx	0	0
dcg4	6/4/2010	8:38:00	0.17	0.12	12.81	0.51	-0.27	2.75	NOX Conv/cg4	NOx	0	0
dcg4	6/4/2010	8:38:15	0.17	0.12	12.83	0.53	-0.25	2.80	NOX Conv/cg4	NOx	0	0
dcg4	6/4/2010	8:38:30	0.17	0.12	12.83	0.58	-0.22	2.78	NOX Conv/cg4	NOx	0	0
dcg4	6/4/2010	8:38:45	0.17	0.12	12.83	0.62	-0.20	2.82	NOX Conv/cg4	NOx	0	0
dcg4	6/4/2010	8:39:00	0.16	0.12	12.84	0.63	-0.22	2.84	NOX Conv/cg4	NOx	0	0
dcg4	6/4/2010	8:39:15	0.17	0.12	12.82	0.56	-0.24	2.89	NOX Conv/cg4	NOx	0	0
dcg4	6/4/2010	8:39:30	0.17	0.12	12.82	0.50	-0.22	2.76	NOX Conv/cg4	NOx	0	0
dcg4	6/4/2010	8:39:45	0.16	0.12	12.83	0.48	-0.21	2.78	NOX Conv/cg4	NOx	0	0
dcg4	6/4/2010	8:40:00	0.16	0.12	12.81	0.51	-0.20	2.87	NOX Conv/cg4	NOx	0	0
dcg4	6/4/2010	8:40:15	0.17	0.12	12.83	0.49	-0.21	2.91	NOX Conv/cg4	NOx	0	0
dcg4	6/4/2010	8:40:30	0.17	0.12	12.83	0.49	-0.21	2.84	NOX Conv/cg4	NOx	0	0
dcg4	6/4/2010	8:40:45	0.17	0.12	12.81	0.55	-0.23	2.80	NOX Conv/cg4	NOx	0	0
dcg4	6/4/2010	8:41:00	0.16	0.12	12.83	0.66	-0.21	2.81	NOX Conv/cg4	NOx	0	0
dcg4	6/4/2010	8:41:15	0.17	0.12	12.80	0.71	-0.22	2.75	NOX Conv/cg4	NOx	0	0
dcg4	6/4/2010	8:41:30	0.17	0.12	12.82	0.59	-0.24	2.82	NOX Conv/cg4	NOx	0	0
dcg4	6/4/2010	8:41:45	0.17	0.12	12.83	0.54	-0.26	2.97	NOX Conv/cg4	NOx	0	0
dcg4	6/4/2010	8:42:00	0.16	0.12	12.84	0.51	-0.26	2.95	NOX Conv/cg4	NOx	0	0
dcg4	6/4/2010	8:42:15	0.17	0.12	12.84	0.48	-0.23	2.94	NOX Conv/cg4	NOx	0	0
dcg4	6/4/2010	8:42:30	0.17	0.12	12.83	0.49	-0.22	2.90	NOX Conv/cg4	NOx	0	0
dcg4	6/4/2010	8:42:45	0.16	0.12	12.84	0.49	-0.24	2.88	NOX Conv/cg4	NOx	0	0

ALM 62169

name			1 O2	2 CO2	3 NOx	4 CO	5 SO2	6 THC				
dcg4	6/4/2010	8:43:00	0.16	0.12	12.81	0.47	-0.24	2.77	NOX Conv/cg4	NOx	0	0
dcg4	6/4/2010	8:43:15	0.17	0.12	12.84	0.43	-0.23	2.93	NOX Conv/cg4	NOx	0	0
dcg4	6/4/2010	8:43:30	0.17	0.12	12.81	0.45	-0.25	3.06	NOX Conv/cg4	NOx	0	0
dcg4	6/4/2010	8:43:45	0.16	0.12	12.81	0.47	-0.22	3.03	NOX Conv/cg4	NOx	0	0
dcg4	6/4/2010	8:44:00	0.17	0.12	12.83	0.50	-0.23	2.90	NOX Conv/cg4	NOx	0	0
dcg4	6/4/2010	8:44:15	0.17	0.12	12.82	0.51	-0.25	2.92	NOX Conv/cg4	NOx	0	0
dcg4	6/4/2010	8:44:30	0.17	0.12	12.82	0.49	-0.26	2.98	NOX Conv/cg4	NOx	0	0
dcg4	6/4/2010	8:44:45	0.16	0.12	12.84	0.47	-0.24	2.91	NOX Conv/cg4	NOx	0	0
dcg4	6/4/2010	8:45:00	0.16	0.12	12.81	0.46	-0.28	2.87	NOX Conv/cg4	NOx	0	0
dcg4	6/4/2010	8:45:15	0.16	0.12	12.80	0.45	-0.30	2.88	NOX Conv/cg4	NOx	0	0
dcg4	6/4/2010	8:45:30	0.17	0.12	12.82	0.43	-0.30	2.87	NOX Conv/cg4	NOx	0	0
dcg4	6/4/2010	8:45:45	0.17	0.13	12.83	0.44	-0.29	3.02	NOX Conv/cg4	NOx	0	0
dcg4	6/4/2010	8:46:00	0.17	0.12	12.81	0.39	-0.31	3.03	NOX Conv/cg4	NOx	0	0
dcg4	6/4/2010	8:46:15	0.16	0.12	12.83	0.43	-0.29	3.05	NOX Conv/cg4	NOx	0	0
dcg4	6/4/2010	8:46:30	0.16	0.12	12.84	0.44	-0.29	2.99	NOX Conv/cg4	NOx	0	0
dcg4	6/4/2010	8:46:45	0.17	0.12	12.80	0.51	-0.30	2.85	NOX Conv/cg4	NOx	0	0
dcg4	6/4/2010	8:47:00	0.17	0.12	12.80	0.51	-0.31	2.80	NOX Conv/cg4	NOx	0	0
dcg4	6/4/2010	8:47:15	0.17	0.12	12.80	0.49	-0.34	2.75	NOX Conv/cg4	NOx	0	0
dcg4	6/4/2010	8:47:30	0.16	0.12	12.80	0.50	-0.32	2.80	NOX Conv/cg4	NOx	0	0
dcg4	6/4/2010	8:47:45	0.17	0.12	12.80	0.44	-0.32	2.81	NOX Conv/cg4	NOx	0	0
dcg4	6/4/2010	8:48:00	0.17	0.12	12.82	0.38	-0.31	2.83	NOX Conv/cg4	NOx	0	0
dcg4	6/4/2010	8:48:15	0.16	0.12	12.80	0.42	-0.31	2.90	NOX Conv/cg4	NOx	0	0
dcg4	6/4/2010	8:48:30	0.17	0.13	12.80	0.39	-0.32	2.88	NOX Conv/cg4	NOx	0	0
dcg4	6/4/2010	8:48:45	0.17	0.12	12.84	0.36	-0.33	2.82	NOX Conv/cg4	NOx	0	0
dcg4	6/4/2010	8:49:00	0.17	0.13	12.83	0.43	-0.32	2.82	NOX Conv/cg4	NOx	0	0
dcg4	6/4/2010	8:49:15	0.17	0.12	12.80	0.43	-0.32	2.83	NOX Conv/cg4	NOx	0	0
dcg4	6/4/2010	8:49:30	0.17	0.12	12.80	0.43	-0.34	2.84	NOX Conv/cg4	NOx	0	0
dcg4	6/4/2010	8:49:45	0.17	0.12	12.80	0.46	-0.34	2.85	NOX Conv/cg4	NOx	0	0
dcg4	6/4/2010	8:50:00	0.17	0.12	12.80	0.44	-0.35	2.92	NOX Conv/cg4	NOx	0	0
dcg4	6/4/2010	8:50:15	0.17	0.12	12.80	0.47	-0.35	2.88	NOX Conv/cg4	NOx	0	0
dcg4	6/4/2010	8:50:30	0.17	0.12	12.80	0.59	-0.34	2.82	NOX Conv/cg4	NOx	0	0
dcg4	6/4/2010	8:50:45	0.16	0.12	12.80	0.61	-0.34	2.83	NOX Conv/cg4	NOx	0	0
dcg4	6/4/2010	8:51:00	0.17	0.12	12.80	0.50	-0.36	2.82	NOX Conv/cg4	NOx	0	0
dcg4	6/4/2010	8:51:15	0.17	0.12	12.80	0.47	-0.37	2.79	NOX Conv/cg4	NOx	0	0
dcg4	6/4/2010	8:51:30	0.17	0.12	12.80	0.49	-0.34	2.75	NOX Conv/cg4	NOx	0	0
dcg4	6/4/2010	8:51:45	0.17	0.12	12.84	0.48	-0.35	2.76	NOX Conv/cg4	NOx	0	0
dcg4	6/4/2010	8:52:00	0.16	0.12	12.84	0.46	-0.34	2.82	NOX Conv/cg4	NOx	0	0
dcg4	6/4/2010	8:52:15	0.16	0.12	12.80	0.46	-0.35	2.88	NOX Conv/cg4	NOx	0	0
dcg4	6/4/2010	8:52:30	0.17	0.12	12.81	0.42	-0.35	2.88	NOX Conv/cg4	NOx	0	0
dcg4	6/4/2010	8:52:45	0.17	0.12	12.82	0.38	-0.38	2.86	NOX Conv/cg4	NOx	0	0
dcg4	6/4/2010	8:53:00	0.17	0.12	12.84	0.38	-0.36	2.83	NOX Conv/cg4	NOx	0	0
dcg4	6/4/2010	8:53:15	0.17	0.11	12.84	0.41	-0.36	2.84	NOX Conv/cg4	NOx	0	0
dcg4	6/4/2010	8:53:30	0.17	0.11	12.84	0.43	-0.41	2.82	NOX Conv/cg4	NOx	0	0
dcg4	6/4/2010	8:53:45	0.16	0.11	12.84	0.47	-0.39	2.83	NOX Conv/cg4	NOx	0	0
dcg4	6/4/2010	8:54:00	0.16	0.11	12.84	0.56	-0.43	2.92	NOX Conv/cg4	NOx	0	0
dcg4	6/4/2010	8:54:15	0.17	0.11	12.81	0.50	-0.43	2.97	NOX Conv/cg4	NOx	0	0
dcg4	6/4/2010	8:54:30	0.17	0.12	12.80	0.44	-0.41	3.02	NOX Conv/cg4	NOx	0	0
dcg4	6/4/2010	8:54:45	0.16	0.11	12.83	0.40	-0.38	2.96	NOX Conv/cg4	NOx	0	0
dcg4	6/4/2010	8:55:00	0.17	0.11	12.80	0.40	-0.43	2.94	NOX Conv/cg4	NOx	0	0
dcg4	6/4/2010	8:55:15	0.16	0.11	12.80	0.43	-0.43	3.10	NOX Conv/cg4	NOx	0	0
dcg4	6/4/2010	8:55:30	0.16	0.11	12.80	0.41	-0.43	3.15	NOX Conv/cg4	NOx	0	0
dcg4	6/4/2010	8:55:45	0.17	0.11	12.84	0.42	-0.44	3.19	NOX Conv/cg4	NOx	0	0
dcg4	6/4/2010	8:56:00	0.17	0.11	12.84	0.42	-0.42	3.29	NOX Conv/cg4	NOx	0	0
dcg4	6/4/2010	8:56:15	0.17	0.10	12.80	0.39	-0.42	3.22	NOX Conv/cg4	NOx	0	0
dcg4	6/4/2010	8:56:30	0.17	0.10	12.80	0.34	-0.44	3.22	NOX Conv/cg4	NOx	0	0
dcg4	6/4/2010	8:56:45	0.17	0.11	12.80	0.34	-0.46	3.17	NOX Conv/cg4	NOx	0	0
dcg4	6/4/2010	8:57:00	0.16	0.10	12.80	0.34	-0.47	3.12	NOX Conv/cg4	NOx	0	0
dcg4	6/4/2010	8:57:15	0.17	0.10	12.80	0.38	-0.46	3.14	NOX Conv/cg4	NOx	0	0
dcg4	6/4/2010	8:57:30	0.17	0.10	12.80	0.43	-0.47	3.07	NOX Conv/cg4	NOx	0	0
dcg4	6/4/2010	8:57:45	0.16	0.10	12.80	0.40	-0.46	3.13	NOX Conv/cg4	NOx	0	0
dcg4	6/4/2010	8:58:00	0.17	0.10	12.80	0.35	-0.46	3.21	NOX Conv/cg4	NOx	0	0
dcg4	6/4/2010	8:58:15	0.17	0.10	12.80	0.39	-0.50	3.17	NOX Conv/cg4	NOx	0	0
dcg4	6/4/2010	8:58:30	0.17	0.10	12.80	0.39	-0.48	3.14	NOX Conv/cg4	NOx	0	0
dcg4	6/4/2010	8:58:45	0.17	0.10	12.80	0.38	-0.46	3.13	NOX Conv/cg4	NOx	0	0
dcg4	6/4/2010	8:59:00	0.17	0.10	12.80	0.38	-0.45	3.26	NOX Conv/cg4	NOx	0	0
dcg4	6/4/2010	8:59:15	0.17	0.10	12.80	0.37	-0.44	3.16	NOX Conv/cg4	NOx	0	0
dcg4	6/4/2010	8:59:30	0.17	0.10	12.80	0.40	-0.49	3.24	NOX Conv/cg4	NOx	0	0
dcg4	6/4/2010	8:59:45	0.17	0.10	12.80	0.36	-0.50	3.19	NOX Conv/cg4	NOx	0	0
dcg4	6/4/2010	9:00:00	0.16	0.10	12.80	0.40	-0.51	3.17	NOX Conv/cg4	NOx	0	0
dcg4	6/4/2010	9:00:15	0.17	0.10	12.80	0.41	-0.54	3.14	NOX Conv/cg4	NOx	0	0
dcg4	6/4/2010	9:00:30	0.17	0.10	12.80	0.44	-0.51	3.12	NOX Conv/cg4	NOx	0	0
dcg4	6/4/2010	9:00:45	0.17	0.10	12.80	0.46	-0.50	3.06	NOX Conv/cg4	NOx	0	0
dcg4	6/4/2010	9:01:00	0.17	0.10	12.80	0.46	-0.51	3.07	NOX Conv/cg4	NOx	0	0
dcg4	6/4/2010	9:01:15	0.16	0.10	12.80	0.38	-0.53	3.01	NOX Conv/cg4	NOx	0	0
dcg4	6/4/2010	9:01:30	0.17	0.10	12.80	0.41	-0.52	3.09	NOX Conv/cg4	NOx	0	0
dcg4	6/4/2010	9:01:45	0.17	0.10	12.80	0.37	-0.51	3.07	NOX Conv/cg4	NOx	0	0
dcg4	6/4/2010	9:02:00	0.16	0.10	12.80	0.35	-0.51	2.95	NOX Conv/cg4	NOx	0	0
dcg4	6/4/2010	9:02:15	0.17	0.10	12.80	0.36	-0.50	2.95	NOX Conv/cg4	NOx	0	0
dcg4	6/4/2010	9:02:30	0.16	0.10	12.80	0.39	-0.48	2.94	NOX Conv/cg4	NOx	0	0
dcg4	6/4/2010	9:02:45	0.17	0.10	12.80	0.38	-0.52	2.95	NOX Conv/cg4	NOx	0	0
dcg4	6/4/2010	9:03:00	0.17	0.10	12.80	0.38	-0.53	2.94	NOX Conv/cg4	NOx	0	0
dcg4	6/4/2010	9:03:15	0.17	0.10	12.80	0.34	-0.56	2.96	NOX Conv/cg4	NOx	0	0
dcg4	6/4/2010	9:03:30	0.17	0.10	12.80	0.36	-0.55	2.92	NOX Conv/cg4	NOx	0	0
dcg4	6/4/2010	9:03:45	0.17	0.11	12.80	0.33	-0.54	2.92	NOX Conv/cg4	NOx	0	0
dcg4	6/4/2010	9:04:00	0.17	0.12	12.80	0.35	-0.56	2.92	NOX Conv/cg4	NOx	0	0
dcg4	6/4/2010	9:04:15	0.17	0.12	12.80	0.38	-0.56	2.88	NOX Conv/cg4	NOx	0	0
dcg4	6/4/2010	9:04:30	0.16	0.12	12.80	0.36	-0.54	2.88	NOX Conv/cg4	NOx	0	0
dcg4	6/4/2010	9:04:45	0.17	0.11	12.80	0.39	-0.55	2.91	NOX Conv/cg4	NOx	0	0
dcg4	6/4/2010	9:05:00	0.16	0.11	12.78	0.37	-0.56	2.93	NOX Conv/cg4	NOx	0	0
dcg4	6/4/2010	9:05:15	0.17	0.11	12.80	0.38	-0.55	2.92	NOX Conv/cg4	NOx	0	0
dcg4	6/4/2010	9:05:30	0.17	0.12	12.78	0.44	-0.56	2.95	NOX Conv/cg4	NOx	0	0
dcg4	6/4/2010	9:05:45	0.16	0.11	12.77	0.46	-0.57	3.02	NOX Conv/cg4	NOx	0	0
dcg4	6/4/2010	9:06:00	0.16	0.11	12.77	0.61	-0.56	2.98	NOX Conv/cg4	NOx	0	0
dcg4	6/4/2010	9:06:15	0.17	0.11	12.78	0.69	-0.58	2.97	NOX Conv/cg4	NOx	0	0
dcg4	6/4/2010	9:06:30	0.17	0.11	12.78	0.58	-0.57	3.00	NOX Conv/cg4	NOx	0	0
dcg4	6/4/2010	9:06:45	0.16	0.12	12.77	0.47	-0.58	3.01	NOX Conv/cg4	NOx	0	0
dcg11	6/4/2010	9:28:00	18.68	0.09	0.13	0.92	-0.72	1.32	ALM057740/cg11	O2	20.9	0
dcg11	6/4/2010	9:28:15	17.79	0.09	0.12	0.57	-0.69	0.71	ALM057740/cg11	O2	20.9	0
dcg11	6/4/2010	9:28:30	19.27	0.10	0.10	0.33	-0.69	0.08	ALM057740/cg11	O2	20.9	0
dcg11	6/4/2010	9:28:45	19.21	0.10	0.10	0.24	-0.68	0.04	ALM057740/cg11	O2	20.9	0

name			1 O2	2 CO2	3 NOx	4 CO	5 SO2	6 THC				
dcg11	6/4/2010	9:29:00	19.19	0.10	0.10	0.30	-0.67	0.03	ALM057740/cg11	O2	20.9	0
dcg11	6/4/2010	9:29:15	19.19	0.10	0.10	0.25	-0.65	0.01	ALM057740/cg11	O2	20.9	0
thcezero1	6/4/2010	9:29:15	19.19	0.10	0.10	0.25	-0.65	0.01	ALM057740/cg11	O2	20.9	0
dcg12	6/4/2010	9:30:15	19.18	0.10	0.10	0.40	-0.74	-0.01	BLM001547/cg12	THC	85.3	0
dcg12	6/4/2010	9:30:30	19.20	0.10	0.10	0.48	-0.70	0.87	BLM001547/cg12	THC	85.3	0
dcg12	6/4/2010	9:30:45	19.20	0.09	0.13	0.45	-0.67	1.51	BLM001547/cg12	THC	85.3	0
dcg12	6/4/2010	9:31:00	19.17	0.08	0.13	0.35	-0.67	73.73	BLM001547/cg12	THC	85.3	0
dcg12	6/4/2010	9:31:15	19.19	0.08	0.14	0.27	-0.69	121.56	BLM001547/cg12	THC	85.3	0
dcg12	6/4/2010	9:31:30	19.18	0.09	0.11	0.24	-0.71	121.54	BLM001547/cg12	THC	85.3	0
dcg12	6/4/2010	9:31:45	19.16	0.10	0.10	0.27	-0.68	114.64	BLM001547/cg12	THC	85.3	0
dcg12	6/4/2010	9:32:00	19.16	0.10	0.12	0.27	-0.71	88.76	BLM001547/cg12	THC	85.3	0
dcg12	6/4/2010	9:32:15	19.15	0.10	0.12	0.25	-0.70	85.26	BLM001547/cg12	THC	85.3	0
dcg12	6/4/2010	9:32:30	19.15	0.10	0.10	0.25	-0.73	85.36	BLM001547/cg12	THC	85.3	0
dcg12	6/4/2010	9:32:45	19.16	0.10	0.11	0.22	-0.76	85.43	BLM001547/cg12	THC	85.3	0
dcg12	6/4/2010	9:33:00	19.16	0.10	0.14	0.26	-0.72	85.33	BLM001547/cg12	THC	85.3	0
thchigh1	6/4/2010	9:33:00	19.16	0.10	0.14	0.26	-0.72	85.33	BLM001547/cg12	THC	85.3	0
dcg13	6/4/2010	9:33:45	19.16	0.10	0.12	0.31	-0.76	85.46	2L1152/cg13	THC	46.4	0
dcg13	6/4/2010	9:34:00	19.19	0.08	0.10	0.27	-0.73	85.44	2L1152/cg13	THC	46.4	0
dcg13	6/4/2010	9:34:15	19.18	0.07	0.10	0.24	-0.75	27.64	2L1152/cg13	THC	46.4	0
dcg13	6/4/2010	9:34:30	19.17	0.07	0.10	0.48	-0.77	72.94	2L1152/cg13	THC	46.4	0
dcg13	6/4/2010	9:34:45	19.20	0.07	0.14	1.11	-0.73	46.73	2L1152/cg13	THC	46.4	0
dcg13	6/4/2010	9:35:00	19.18	0.07	0.16	1.01	-0.72	46.56	2L1152/cg13	THC	46.4	0
dcg13	6/4/2010	9:35:15	19.19	0.07	0.12	0.47	-0.73	46.52	2L1152/cg13	THC	46.4	0
dcg13	6/4/2010	9:35:30	19.20	0.07	0.10	0.24	-0.71	46.50	2L1152/cg13	THC	46.4	0
dcg13	6/4/2010	9:35:45	19.17	0.07	0.10	0.25	-0.71	46.52	2L1152/cg13	THC	46.4	0
thcmid1	6/4/2010	9:35:45	19.17	0.07	0.10	0.25	-0.71	46.52	2L1152/cg13	THC	46.4	0
dcg14	6/4/2010	9:36:45	19.19	0.07	0.11	0.60	-0.73	45.10	BAL445/cg14	THC	26.3	0
dcg14	6/4/2010	9:37:00	17.27	0.07	0.13	0.65	-0.73	3.85	BAL445/cg14	THC	26.3	0
dcg14	6/4/2010	9:37:15	17.80	0.07	0.14	0.48	-0.77	1.58	BAL445/cg14	THC	26.3	0
dcg14	6/4/2010	9:37:30	19.27	0.07	0.14	0.31	-0.76	11.75	BAL445/cg14	THC	26.3	0
dcg14	6/4/2010	9:37:45	19.25	0.07	0.10	0.24	-0.77	37.44	BAL445/cg14	THC	26.3	0
dcg14	6/4/2010	9:38:00	19.26	0.06	0.10	0.24	-0.76	26.30	BAL445/cg14	THC	26.3	0
dcg14	6/4/2010	9:38:15	19.27	0.07	0.10	0.25	-0.77	26.34	BAL445/cg14	THC	26.3	0
dcg14	6/4/2010	9:38:30	19.27	0.07	0.10	0.40	-0.73	26.38	BAL445/cg14	THC	26.3	0
dcg14	6/4/2010	9:38:45	19.26	0.07	0.11	0.63	-0.73	26.37	BAL445/cg14	THC	26.3	0
thclow1	6/4/2010	9:38:45	19.26	0.07	0.11	0.63	-0.73	26.37	BAL445/cg14	THC	26.3	0
scg7	6/4/2010	9:40:45	19.26	0.06	0.10	0.25	-0.72	1.53	ALM025404/cg7	SO2	43.6	0
scg7	6/4/2010	9:41:00	19.27	0.06	0.10	0.20	-0.73	1.30	ALM025404/cg7	SO2	43.6	0
scg7	6/4/2010	9:41:15	18.98	0.25	0.10	0.27	-0.73	1.20	ALM025404/cg7	SO2	43.6	0
scg7	6/4/2010	9:41:30	16.90	1.14	0.12	0.37	-0.24	1.20	ALM025404/cg7	SO2	43.6	0
scg7	6/4/2010	9:41:45	12.29	0.57	0.15	0.42	4.31	1.14	ALM025404/cg7	SO2	43.6	0
scg7	6/4/2010	9:42:00	10.15	0.12	0.19	0.33	10.33	1.11	ALM025404/cg7	SO2	43.6	0
scg7	6/4/2010	9:42:15	6.17	0.06	0.16	0.14	18.43	1.02	ALM025404/cg7	SO2	43.6	0
scg7	6/4/2010	9:42:30	1.31	0.03	0.16	0.14	28.42	1.00	ALM025404/cg7	SO2	43.6	0
scg7	6/4/2010	9:42:45	0.34	0.02	0.17	0.12	33.84	0.99	ALM025404/cg7	SO2	43.6	0
scg7	6/4/2010	9:43:00	0.18	0.02	0.17	0.12	36.50	1.00	ALM025404/cg7	SO2	43.6	0
scg7	6/4/2010	9:43:15	0.15	0.02	0.17	0.17	37.83	1.04	ALM025404/cg7	SO2	43.6	0
scg7	6/4/2010	9:43:30	0.12	0.02	0.17	0.14	38.51	1.00	ALM025404/cg7	SO2	43.6	0
scg7	6/4/2010	9:43:45	0.11	0.02	0.17	0.12	38.99	1.00	ALM025404/cg7	SO2	43.6	0
scg7	6/4/2010	9:44:00	0.11	0.02	0.17	0.14	39.27	0.98	ALM025404/cg7	SO2	43.6	0
scg7	6/4/2010	9:44:15	0.11	0.02	0.17	0.12	39.43	0.97	ALM025404/cg7	SO2	43.6	0
scg7	6/4/2010	9:44:30	0.12	0.02	0.17	0.14	39.54	0.95	ALM025404/cg7	SO2	43.6	0
scg7	6/4/2010	9:44:45	0.12	0.02	0.17	0.18	39.66	0.94	ALM025404/cg7	SO2	43.6	0
scg7	6/4/2010	9:45:00	0.11	0.02	0.17	0.18	39.77	0.94	ALM025404/cg7	SO2	43.6	0
scg7	6/4/2010	9:45:15	0.10	0.02	0.17	0.14	40.14	0.93	ALM025404/cg7	SO2	43.6	0
scg7	6/4/2010	9:45:30	0.12	0.02	0.17	0.11	40.51	0.91	ALM025404/cg7	SO2	43.6	0
scg7	6/4/2010	9:45:45	0.11	0.02	0.17	0.10	40.56	0.91	ALM025404/cg7	SO2	43.6	0
scg7	6/4/2010	9:46:00	0.09	0.02	0.17	0.10	40.60	0.91	ALM025404/cg7	SO2	43.6	0
scg7	6/4/2010	9:46:15	0.11	0.02	0.17	0.11	40.63	0.91	ALM025404/cg7	SO2	43.6	0
o2zero1	6/4/2010	9:46:15	0.11	0.02	0.17	0.11	40.63	0.91	ALM025404/cg7	SO2	43.6	0
co2zero1	6/4/2010	9:46:15	0.11	0.02	0.17	0.11	40.63	0.91	ALM025404/cg7	SO2	43.6	0
noxzero1	6/4/2010	9:46:15	0.11	0.02	0.17	0.11	40.63	0.91	ALM025404/cg7	SO2	43.6	0
cozero1	6/4/2010	9:46:15	0.11	0.02	0.17	0.11	40.63	0.91	ALM025404/cg7	SO2	43.6	0
so2span1	6/4/2010	9:46:15	0.11	0.02	0.17	0.11	40.63	0.91	ALM025404/cg7	SO2	43.6	0
scg9	6/4/2010	9:46:45	0.13	0.02	0.17	0.11	40.72	0.90	ALM05391/cg9	O2	11.8 CO2	12.1
scg9	6/4/2010	9:47:00	0.11	0.02	0.17	0.11	40.75	0.89	ALM05391/cg9	O2	11.8 CO2	12.1
scg9	6/4/2010	9:47:15	0.67	0.29	0.17	0.09	39.95	0.90	ALM05391/cg9	O2	11.8 CO2	12.1
scg9	6/4/2010	9:47:30	6.60	5.54	0.17	0.09	26.13	0.90	ALM05391/cg9	O2	11.8 CO2	12.1
scg9	6/4/2010	9:47:45	10.71	11.03	0.16	0.16	12.08	0.89	ALM05391/cg9	O2	11.8 CO2	12.1
scg9	6/4/2010	9:48:00	11.15	11.68	0.11	0.22	6.00	0.90	ALM05391/cg9	O2	11.8 CO2	12.1
scg9	6/4/2010	9:48:15	11.19	11.74	0.10	0.27	3.56	0.93	ALM05391/cg9	O2	11.8 CO2	12.1
scg9	6/4/2010	9:48:30	11.20	11.75	0.10	0.26	2.29	0.99	ALM05391/cg9	O2	11.8 CO2	12.1
scg9	6/4/2010	9:48:45	11.51	11.76	0.10	0.26	1.52	20.08	ALM05391/cg9	O2	11.8 CO2	12.1
scg9	6/4/2010	9:49:00	11.77	11.76	0.10	0.25	0.98	0.63	ALM05391/cg9	O2	11.8 CO2	12.1
scg9	6/4/2010	9:49:15	11.77	11.97	0.10	0.30	0.64	0.06	ALM05391/cg9	O2	11.8 CO2	12.1
scg9	6/4/2010	9:49:30	11.76	11.97	0.10	0.27	0.41	0.01	ALM05391/cg9	O2	11.8 CO2	12.1
scg9	6/4/2010	9:49:45	11.76	11.97	0.10	0.26	0.22	-0.01	ALM05391/cg9	O2	11.8 CO2	12.1
so2zero1	6/4/2010	9:49:45	11.76	11.97	0.10	0.26	0.22	-0.01	ALM05391/cg9	O2	11.8 CO2	12.1
o2span1	6/4/2010	9:49:45	11.76	11.97	0.10	0.26	0.22	-0.01	ALM05391/cg9	O2	11.8 CO2	12.1
co2span1	6/4/2010	9:49:45	11.76	11.97	0.10	0.26	0.22	-0.01	ALM05391/cg9	O2	11.8 CO2	12.1
scg2	6/4/2010	9:50:30	11.79	11.90	0.10	0.32	-0.08	-0.02	BLM001094/cg2	NOx	45.3	0
scg2	6/4/2010	9:50:45	14.93	8.25	0.10	0.32	0.48	-0.04	BLM001094/cg2	NOx	45.3	0
scg2	6/4/2010	9:51:00	18.79	2.24	0.10	0.22	1.77	-0.02	BLM001094/cg2	NOx	45.3	0
scg2	6/4/2010	9:51:15	10.68	2.85	0.17	0.12	1.65	-0.03	BLM001094/cg2	NOx	45.3	0
scg2	6/4/2010	9:51:30	1.94	1.26	10.46	0.09	0.97	-0.03	BLM001094/cg2	NOx	45.3	0
scg2	6/4/2010	9:51:45	0.42	0.22	34.47	0.07	0.46	-0.03	BLM001094/cg2	NOx	45.3	0
scg2	6/4/2010	9:52:00	0.21	0.09	41.68	0.11	0.14	-0.03	BLM001094/cg2	NOx	45.3	0
scg2	6/4/2010	9:52:15	0.17	0.06	43.75	0.13	-0.02	-0.04	BLM001094/cg2	NOx	45.3	0
scg2	6/4/2010	9:52:30	0.13	0.05	44.10	0.18	-0.13	-0.05	BLM001094/cg2	NOx	45.3	0
scg2	6/4/2010	9:52:45	0.13	0.04	44.25	0.15	-0.19	-0.06	BLM001094/cg2	NOx	45.3	0
scg2	6/4/2010	9:53:00	0.12	0.03	44.28	0.15	-0.23	-0.05	BLM001094/cg2	NOx	45.3	0
noxspan1	6/4/2010	9:53:00	0.12	0.03	44.28	0.15	-0.23	-0.05	BLM001094/cg2	NOx	45.3	0
scg11	6/4/2010	9:53:15	0.14	0.03	44.34	0.14	-0.30	-0.05	ALM057740/cg11	O2	20.9	0
scg11	6/4/2010	9:53:30	0.12	0.03	44.38	0.14	-0.35	-0.06	ALM057740/cg11	O2	20.9	0
scg11	6/4/2010	9:53:45	0.50	0.02	44.40	0.17	-0.37	-0.07	ALM057740/cg11	O2	20.9	0
scg11	6/4/2010	9:54:00	9.17	0.04	44.40	0.21	-0.20	-0.06	ALM057740/cg11	O2	20.9	0
thczero1	6/4/2010	9:54:00	9.17	0.04	44.40	0.21	-0.20	-0.06	ALM057740/cg11	O2	20.9	0
scg5	6/4/2010	9:54:15	18.53	0.06	26.20	0.58	0.26	-0.06	ALM051832/cg5	CO	42.9	0
scg5	6/4/2010	9:54:30	19.91	0.07	10.09	1.36	0.53	-0.06	ALM051832/cg5	CO	42.9	0
scg5	6/4/2010	9:54:45	20.14	0.06	1.58	1.44	0.62	-0.05	ALM051832/cg5	CO	42.9	0

name			1 O2	2 CO2	3 NOx	4 CO	5 SO2	6 THC				
scg5	6/4/2010	9:55:00	13.53	0.07	1.10	1.61	0.54	-0.04	ALM051832/cg5	CO	42.9	0
scg5	6/4/2010	9:55:15	2.86	0.05	11.86	13.24	0.25	-0.04	ALM051832/cg5	CO	42.9	0
scg5	6/4/2010	9:55:30	0.56	0.02	13.01	28.50	0.01	-0.04	ALM051832/cg5	CO	42.9	0
scg5	6/4/2010	9:55:45	0.23	0.02	1.86	39.76	-0.14	0.06	ALM051832/cg5	CO	42.9	0
scg5	6/4/2010	9:56:00	0.16	0.02	0.71	42.30	-0.25	0.66	ALM051832/cg5	CO	42.9	0
scg5	6/4/2010	9:56:15	0.13	0.02	0.37	42.77	-0.31	18.06	ALM051832/cg5	CO	42.9	0
scg5	6/4/2010	9:56:30	0.13	0.02	0.30	42.85	-0.36	44.18	ALM051832/cg5	CO	42.9	0
scg5	6/4/2010	9:56:45	0.10	0.02	0.29	43.00	-0.38	44.53	ALM051832/cg5	CO	42.9	0
scg5	6/4/2010	9:57:00	0.13	0.02	0.28	42.88	-0.46	44.67	ALM051832/cg5	CO	42.9	0
cospan1	6/4/2010	9:57:00	0.13	0.02	0.28	42.88	-0.46	44.67	ALM051832/cg5	CO	42.9	0
scg13	6/4/2010	9:57:15	0.10	0.02	0.27	42.87	-0.45	44.75	2L1152/cg13	THC	46.4	0
scg13	6/4/2010	9:57:30	0.11	0.02	0.27	42.82	-0.44	44.78	2L1152/cg13	THC	46.4	0
scg13	6/4/2010	9:57:45	0.87	0.02	0.27	42.35	-0.47	45.44	2L1152/cg13	THC	46.4	0
scg13	6/4/2010	9:58:00	11.01	0.04	0.27	35.74	-0.39	46.06	2L1152/cg13	THC	46.4	0
scg13	6/4/2010	9:58:15	19.12	0.05	0.23	17.13	-0.21	46.08	2L1152/cg13	THC	46.4	0
scg13	6/4/2010	9:58:30	20.14	0.05	0.18	5.94	-0.18	46.10	2L1152/cg13	THC	46.4	0
scg13	6/4/2010	9:58:45	20.28	0.05	0.16	1.04	-0.11	46.11	2L1152/cg13	THC	46.4	0
thcspan1	6/4/2010	9:58:45	20.28	0.05	0.16	1.04	-0.11	46.11	2L1152/cg13	THC	46.4	0
scg7	6/4/2010	11:15:45	3.38	4.12	22.34	13.44	30.28	0.24	ALM025404/cg7	SO2	43.6	0
scg7	6/4/2010	11:16:00	3.45	4.11	22.36	14.26	30.35	0.29	ALM025404/cg7	SO2	43.6	0
scg7	6/4/2010	11:16:15	3.15	3.78	22.28	14.86	28.75	0.28	ALM025404/cg7	SO2	43.6	0
scg7	6/4/2010	11:16:30	1.29	1.51	18.93	15.13	26.59	0.31	ALM025404/cg7	SO2	43.6	0
scg7	6/4/2010	11:16:45	0.25	0.21	10.37	8.80	32.98	0.31	ALM025404/cg7	SO2	43.6	0
scg7	6/4/2010	11:17:00	0.12	0.07	3.13	3.36	36.99	0.29	ALM025404/cg7	SO2	43.6	0
scg7	6/4/2010	11:17:15	0.09	0.04	0.75	0.66	38.75	0.30	ALM025404/cg7	SO2	43.6	0
scg7	6/4/2010	11:17:30	0.10	0.03	0.48	0.28	39.73	0.33	ALM025404/cg7	SO2	43.6	0
scg7	6/4/2010	11:17:45	0.10	0.02	0.38	0.18	40.23	1.44	ALM025404/cg7	SO2	43.6	0
scg7	6/4/2010	11:18:00	0.10	0.02	0.33	0.16	40.52	29.00	ALM025404/cg7	SO2	43.6	0
scg7	6/4/2010	11:18:15	0.11	0.02	0.29	0.20	40.77	4.26	ALM025404/cg7	SO2	43.6	0
scg7	6/4/2010	11:18:30	0.12	0.02	0.29	0.14	40.93	0.47	ALM025404/cg7	SO2	43.6	0
scg7	6/4/2010	11:18:45	0.13	0.02	0.27	0.15	41.04	0.38	ALM025404/cg7	SO2	43.6	0
o2zero1	6/4/2010	11:18:45	0.13	0.02	0.27	0.15	41.04	0.38	ALM025404/cg7	SO2	43.6	0
co2zero1	6/4/2010	11:18:45	0.13	0.02	0.27	0.15	41.04	0.38	ALM025404/cg7	SO2	43.6	0
noxzero1	6/4/2010	11:18:45	0.13	0.02	0.27	0.15	41.04	0.38	ALM025404/cg7	SO2	43.6	0
cozero1	6/4/2010	11:18:45	0.13	0.02	0.27	0.15	41.04	0.38	ALM025404/cg7	SO2	43.6	0
so2span1	6/4/2010	11:18:45	0.13	0.02	0.27	0.15	41.04	0.38	ALM025404/cg7	SO2	43.6	0
scg11	6/4/2010	11:19:00	0.10	0.02	0.27	0.15	41.11	0.36	ALM057740/cg11	O2	20.9	0
scg11	6/4/2010	11:19:15	0.10	0.02	0.24	0.17	41.16	0.35	ALM057740/cg11	O2	20.9	0
scg11	6/4/2010	11:19:30	0.15	0.04	0.24	0.17	41.18	0.33	ALM057740/cg11	O2	20.9	0
scg11	6/4/2010	11:19:45	1.55	1.38	1.05	1.96	39.92	0.32	ALM057740/cg11	O2	20.9	0
scg11	6/4/2010	11:20:00	3.24	3.60	4.34	6.44	36.18	0.18	ALM057740/cg11	O2	20.9	0
scg11	6/4/2010	11:20:15	3.50	4.01	15.33	10.61	33.61	0.00	ALM057740/cg11	O2	20.9	0
scg11	6/4/2010	11:20:30	3.56	4.07	21.96	11.96	32.14	0.00	ALM057740/cg11	O2	20.9	0
thczero1	6/4/2010	11:20:30	3.56	4.07	21.96	11.96	32.14	0.00	ALM057740/cg11	O2	20.9	0
scg9	6/4/2010	11:20:45	3.60	4.09	22.51	13.16	31.28	0.00	ALM05391/cg9	O2	11.8 CO2	12.1
scg9	6/4/2010	11:21:00	3.66	4.10	22.63	13.36	30.67	-0.01	ALM05391/cg9	O2	11.8 CO2	12.1
scg9	6/4/2010	11:21:15	3.61	3.87	22.57	12.89	30.36	-0.01	ALM05391/cg9	O2	11.8 CO2	12.1
scg9	6/4/2010	11:21:30	6.79	5.62	20.14	9.89	25.26	-0.02	ALM05391/cg9	O2	11.8 CO2	12.1
scg9	6/4/2010	11:21:45	11.04	10.95	12.65	4.64	13.36	-0.02	ALM05391/cg9	O2	11.8 CO2	12.1
scg9	6/4/2010	11:22:00	11.61	12.06	3.52	1.66	7.34	0.10	ALM05391/cg9	O2	11.8 CO2	12.1
scg9	6/4/2010	11:22:15	11.68	12.15	0.66	0.49	4.73	-0.01	ALM05391/cg9	O2	11.8 CO2	12.1
scg9	6/4/2010	11:22:30	11.68	12.16	0.32	0.32	3.29	0.02	ALM05391/cg9	O2	11.8 CO2	12.1
scg9	6/4/2010	11:22:45	11.68	12.17	0.24	0.33	2.45	30.31	ALM05391/cg9	O2	11.8 CO2	12.1
scg9	6/4/2010	11:23:00	11.69	12.17	0.21	0.33	1.97	41.95	ALM05391/cg9	O2	11.8 CO2	12.1
scg9	6/4/2010	11:23:15	11.69	12.18	0.20	0.19	1.54	42.23	ALM05391/cg9	O2	11.8 CO2	12.1
scg9	6/4/2010	11:23:30	11.69	12.17	0.18	0.24	1.27	42.37	ALM05391/cg9	O2	11.8 CO2	12.1
scg9	6/4/2010	11:23:45	11.69	12.16	0.17	0.24	1.03	42.49	ALM05391/cg9	O2	11.8 CO2	12.1
so2zero1	6/4/2010	11:23:45	11.69	12.16	0.17	0.24	1.03	42.49	ALM05391/cg9	O2	11.8 CO2	12.1
o2span1	6/4/2010	11:23:45	11.69	12.16	0.17	0.24	1.03	42.49	ALM05391/cg9	O2	11.8 CO2	12.1
co2span1	6/4/2010	11:23:45	11.69	12.16	0.17	0.24	1.03	42.49	ALM05391/cg9	O2	11.8 CO2	12.1
scg13	6/4/2010	11:24:00	11.68	12.15	0.17	0.25	0.88	42.58	2L1152/cg13	THC	46.4	0
scg13	6/4/2010	11:24:15	11.64	12.14	0.17	0.27	0.76	42.67	2L1152/cg13	THC	46.4	0
scg13	6/4/2010	11:24:30	11.54	12.11	0.17	0.24	0.71	42.79	2L1152/cg13	THC	46.4	0
scg13	6/4/2010	11:24:45	9.03	9.97	0.62	1.95	2.84	42.89	2L1152/cg13	THC	46.4	0
scg13	6/4/2010	11:25:00	4.83	5.50	2.81	6.68	11.55	44.60	2L1152/cg13	THC	46.4	0
scg13	6/4/2010	11:25:15	3.92	4.36	15.33	11.39	18.99	45.11	2L1152/cg13	THC	46.4	0
scg13	6/4/2010	11:25:30	3.79	4.26	21.78	13.06	22.84	45.16	2L1152/cg13	THC	46.4	0
scg13	6/4/2010	11:25:45	3.81	4.23	22.86	13.48	24.99	45.21	2L1152/cg13	THC	46.4	0
thcspan1	6/4/2010	11:25:45	3.81	4.23	22.86	13.48	24.99	45.21	2L1152/cg13	THC	46.4	0
scg2	6/4/2010	11:26:00	3.85	4.20	22.94	13.35	26.14	45.19	BLM001094/cg2	NOx	45.3	0
scg2	6/4/2010	11:26:15	3.93	4.15	22.89	14.37	26.78	44.98	BLM001094/cg2	NOx	45.3	0
scg2	6/4/2010	11:26:30	4.10	4.18	22.68	16.02	27.04	45.03	BLM001094/cg2	NOx	45.3	0
scg2	6/4/2010	11:26:45	4.57	4.79	21.48	14.84	20.67	44.95	BLM001094/cg2	NOx	45.3	0
scg2	6/4/2010	11:27:00	1.66	2.04	18.09	8.80	10.57	6.52	BLM001094/cg2	NOx	45.3	0
scg2	6/4/2010	11:27:15	0.27	0.29	32.43	2.45	5.83	0.54	BLM001094/cg2	NOx	45.3	0
scg2	6/4/2010	11:27:30	0.15	0.10	41.22	0.71	3.83	0.32	BLM001094/cg2	NOx	45.3	0
scg2	6/4/2010	11:27:45	0.11	0.06	43.57	0.24	2.70	0.15	BLM001094/cg2	NOx	45.3	0
scg2	6/4/2010	11:28:00	0.13	0.05	43.86	0.17	2.03	0.10	BLM001094/cg2	NOx	45.3	0
scg2	6/4/2010	11:28:15	0.12	0.04	43.94	0.23	1.63	0.15	BLM001094/cg2	NOx	45.3	0
scg2	6/4/2010	11:28:30	0.11	0.04	43.99	0.11	1.31	0.19	BLM001094/cg2	NOx	45.3	0
noxspan1	6/4/2010	11:28:30	0.11	0.04	43.99	0.11	1.31	0.19	BLM001094/cg2	NOx	45.3	0
scg5	6/4/2010	11:28:45	0.11	0.03	44.01	0.17	1.06	0.16	ALM051832/cg5	CO	42.9	0
scg5	6/4/2010	11:29:00	0.10	0.03	44.00	0.20	0.85	0.12	ALM051832/cg5	CO	42.9	0
scg5	6/4/2010	11:29:15	0.12	0.02	44.01	0.27	0.76	0.14	ALM051832/cg5	CO	42.9	0
scg5	6/4/2010	11:29:30	0.13	0.02	43.80	4.61	0.70	0.10	ALM051832/cg5	CO	42.9	0
scg5	6/4/2010	11:29:45	0.11	0.02	36.56	23.65	0.58	0.07	ALM051832/cg5	CO	42.9	0
scg5	6/4/2010	11:30:00	0.11	0.02	10.78	36.43	0.47	0.07	ALM051832/cg5	CO	42.9	0
scg5	6/4/2010	11:30:15	0.11	0.02	1.96	41.70	0.41	0.15	ALM051832/cg5	CO	42.9	0
scg5	6/4/2010	11:30:30	0.11	0.02	0.69	42.60	0.37	0.10	ALM051832/cg5	CO	42.9	0
scg5	6/4/2010	11:30:45	0.10	0.02	0.44	42.84	0.34	0.05	ALM051832/cg5	CO	42.9	0
scg5	6/4/2010	11:31:00	0.08	0.02	0.40	42.73	0.27	0.01	ALM051832/cg5	CO	42.9	0
scg5	6/4/2010	11:31:15	0.09	0.01	0.37	42.88	0.24	0.05	ALM051832/cg5	CO	42.9	0
scg5	6/4/2010	11:31:30	0.09	0.01	0.34	42.93	0.23	0.09	ALM051832/cg5	CO	42.9	0
cospan1	6/4/2010	11:31:30	0.09	0.01	0.34	42.93	0.23	0.09	ALM051832/cg5	CO	42.9	0
strat check	6/4/2010	11:34:00	3.49	4.14	22.46	11.33	28.43	0.03				
strat check	6/4/2010	11:34:15	3.47	4.15	22.65	10.67	28.80	0.29				
strat check	6/4/2010	11:34:30	3.45	4.15	22.81	10.35	29.09	0.62				
strat check	6/4/2010	11:34:45	3.47	4.12	22.81	10.59	29.29	0.07				
strat check	6/4/2010	11:35:00	3.49	4.11	22.55	11.24	29.44	0.04				
strat check	6/4/2010	11:35:15	3.50	4.11	22.48	12.01	29.51	0.01				

name			1 O2	2 CO2	3 NOx	4 CO	5 SO2	6 THC
strat check	6/4/2010	11:35:30	3.54	4.12	22.53	12.04	29.51	0.02
strat check	6/4/2010	11:35:45	3.55	4.13	22.66	11.78	29.50	-0.01
strat check	6/4/2010	11:36:00	3.56	4.11	22.64	11.83	29.58	0.13
strat check	6/4/2010	11:36:15	3.56	4.10	22.41	13.00	29.64	0.08
strat check	6/4/2010	11:36:30	3.63	4.09	22.17	13.71	29.72	0.11
strat check	6/4/2010	11:36:45	3.61	4.09	21.91	13.39	29.76	0.08
strat check	6/4/2010	11:37:00	3.54	4.09	21.92	12.78	29.78	0.08
strat check	6/4/2010	11:37:15	3.50	4.11	21.91	12.51	29.76	0.07
strat check	6/4/2010	11:37:30	3.50	4.12	21.99	12.31	29.71	0.05
strat check	6/4/2010	11:37:45	3.48	4.10	22.10	13.01	29.69	0.07
strat check	6/4/2010	11:38:00	3.49	4.10	22.02	14.70	29.77	0.16
strat check	6/4/2010	11:38:15	3.48	4.11	22.08	14.83	29.87	0.15
strat check	6/4/2010	11:38:30	3.44	4.11	22.12	13.97	29.98	0.04
strat check	6/4/2010	11:38:45	3.41	4.12	22.12	12.83	30.04	0.03
strat check	6/4/2010	11:39:00	3.40	4.12	22.20	11.43	30.06	0.07
strat check	6/4/2010	11:39:15	3.41	4.10	22.19	11.06	30.13	0.01
strat check	6/4/2010	11:39:30	3.45	4.07	22.10	11.89	30.22	0.06
strat check	6/4/2010	11:39:45	3.48	4.07	21.91	13.01	30.25	0.10
strat check	6/4/2010	11:40:00	3.46	4.07	21.81	13.75	30.23	0.07
strat check	6/4/2010	11:40:15	3.43	4.07	21.68	14.17	30.26	0.07
strat check	6/4/2010	11:40:30	3.38	4.08	21.67	14.78	30.39	0.04
strat check	6/4/2010	11:40:45	3.34	4.10	21.79	15.27	30.48	0.05
strat check	6/4/2010	11:41:00	3.29	4.13	21.86	14.13	30.49	0.02
strat check	6/4/2010	11:41:15	3.25	4.17	22.04	11.94	30.53	-0.08
strat check	6/4/2010	11:41:30	3.26	4.17	22.18	10.36	30.60	-0.19
strat check	6/4/2010	11:41:45	3.29	4.16	22.20	10.42	30.60	0.13
strat check	6/4/2010	11:42:00	3.33	4.14	22.01	11.36	30.56	0.02
strat check	6/4/2010	11:42:15	3.41	4.11	21.88	12.90	30.62	-0.35
strat check	6/4/2010	11:42:30	3.43	4.08	21.74	14.39	30.70	-0.41
strat check	6/4/2010	11:42:45	3.40	4.08	21.53	14.81	30.69	-0.42
strat check	6/4/2010	11:43:00	3.33	4.10	21.60	14.18	30.68	-0.22
strat check	6/4/2010	11:43:15	3.30	4.12	21.72	12.70	30.79	-0.24
strat check	6/4/2010	11:43:30	3.28	4.13	21.90	11.69	30.97	-0.32
strat check	6/4/2010	11:43:45	3.29	4.13	22.16	11.32	31.12	-0.31
strat check	6/4/2010	11:44:00	3.32	4.13	22.06	11.28	31.09	-0.28
strat check	6/4/2010	11:44:15	3.34	4.12	22.04	11.34	30.95	-0.33
strat check	6/4/2010	11:44:30	3.34	4.11	21.97	11.06	30.81	-0.33
strat check	6/4/2010	11:44:45	3.32	4.11	21.88	10.60	30.74	-0.30
strat check	6/4/2010	11:45:00	3.32	4.10	21.98	10.81	30.82	-0.30
strat check	6/4/2010	11:45:15	3.33	4.10	21.88	11.25	30.92	-0.32
strat check	6/4/2010	11:45:30	3.33	4.11	21.84	11.31	30.95	-0.34
strat check	6/4/2010	11:45:45	3.33	4.11	21.87	11.50	30.97	-0.28
run1	6/4/2010	11:46:00	3.37	4.09	21.91	11.85	30.95	-0.33
run1	6/4/2010	11:46:15	3.38	4.09	21.87	11.75	30.99	-0.28
run1	6/4/2010	11:46:30	3.40	4.07	21.86	11.81	31.65	-0.32
run1	6/4/2010	11:46:45	3.40	4.08	21.85	12.14	31.81	-0.32
run1	6/4/2010	11:47:00	3.41	4.07	21.79	12.63	31.29	-0.32
run1	6/4/2010	11:47:15	3.42	4.07	21.76	12.78	30.82	-0.32
run1	6/4/2010	11:47:30	3.43	4.07	21.78	12.82	30.53	-0.29
run1	6/4/2010	11:47:45	3.43	4.07	21.91	12.85	30.33	-0.29
run1	6/4/2010	11:48:00	3.44	4.07	22.02	12.58	30.21	-0.35
run1	6/4/2010	11:48:15	3.45	4.08	22.02	12.01	30.07	-0.39
run1	6/4/2010	11:48:30	3.48	4.08	22.04	11.65	29.92	-0.36
run1	6/4/2010	11:48:45	3.48	4.08	22.09	11.86	29.95	-0.36
run1	6/4/2010	11:49:00	3.51	4.08	21.95	11.83	29.95	-0.36
run1	6/4/2010	11:49:15	3.53	4.06	21.94	12.00	29.94	-0.35
run1	6/4/2010	11:49:30	3.54	4.06	21.99	12.34	29.88	-0.35
run1	6/4/2010	11:49:45	3.57	4.05	22.04	12.90	29.82	-0.38
run1	6/4/2010	11:50:00	3.59	4.04	21.95	12.75	29.73	-0.34
run1	6/4/2010	11:50:15	3.58	4.05	21.98	12.26	29.70	-0.34
run1	6/4/2010	11:50:30	3.56	4.06	22.03	11.98	29.74	-0.37
run1	6/4/2010	11:50:45	3.58	4.07	22.12	11.67	29.83	-0.36
run1	6/4/2010	11:51:00	3.61	4.06	22.14	12.06	29.90	-0.34
run1	6/4/2010	11:51:15	3.62	4.04	22.15	12.81	29.98	-0.34
run1	6/4/2010	11:51:30	3.62	4.04	22.11	12.66	30.02	-0.40
run1	6/4/2010	11:51:45	3.63	4.05	22.06	11.82	30.07	-0.33
run1	6/4/2010	11:52:00	3.63	4.04	22.18	12.13	30.10	-0.34
run1	6/4/2010	11:52:15	3.69	4.03	22.02	12.98	30.19	-0.33
run1	6/4/2010	11:52:30	3.69	4.03	21.95	13.20	30.25	-0.30
run1	6/4/2010	11:52:45	3.67	4.03	21.99	13.85	30.27	-0.35
run1	6/4/2010	11:53:00	3.64	4.04	21.82	14.64	30.24	-0.37
run1	6/4/2010	11:53:15	3.64	4.06	21.97	13.73	30.14	-0.32
run1	6/4/2010	11:53:30	3.63	4.07	22.10	12.73	30.09	-0.33
run1	6/4/2010	11:53:45	3.63	4.07	22.22	12.95	30.09	-0.35
run1	6/4/2010	11:54:00	3.65	4.07	22.31	12.74	30.20	-0.34
run1	6/4/2010	11:54:15	3.68	4.05	22.30	12.05	30.28	-0.33
run1	6/4/2010	11:54:30	3.68	4.03	22.27	11.80	30.32	-0.33
run1	6/4/2010	11:54:45	3.69	4.00	22.17	12.88	30.35	-0.36
run1	6/4/2010	11:55:00	3.71	3.99	21.81	14.00	30.33	-0.32
run1	6/4/2010	11:55:15	3.71	3.98	21.81	14.21	30.31	-0.34
run1	6/4/2010	11:55:30	3.67	3.99	21.92	13.40	30.34	-0.36
run1	6/4/2010	11:55:45	3.65	4.00	21.97	11.96	30.34	-0.37
run1	6/4/2010	11:56:00	3.62	4.01	22.04	10.90	30.33	-0.34
run1	6/4/2010	11:56:15	3.64	4.00	22.30	10.84	30.31	-0.37
run1	6/4/2010	11:56:30	3.70	3.96	22.31	12.48	30.36	-0.34
run1	6/4/2010	11:56:45	3.71	3.93	22.02	14.22	30.47	-0.32
run1	6/4/2010	11:57:00	3.69	3.92	21.91	14.78	30.55	-0.37
run1	6/4/2010	11:57:15	3.66	3.94	21.88	15.35	30.61	-0.34
run1	6/4/2010	11:57:30	3.66	3.96	21.90	15.61	30.62	-0.37
run1	6/4/2010	11:57:45	3.65	3.98	22.03	13.96	30.64	-0.28
run1	6/4/2010	11:58:00	3.67	3.97	22.30	12.75	30.67	-0.30
run1	6/4/2010	11:58:15	3.70	3.97	22.26	12.78	30.67	-0.33
run1	6/4/2010	11:58:30	3.69	3.97	22.23	13.35	30.63	-0.37
run1	6/4/2010	11:58:45	3.71	3.97	22.30	14.22	30.54	-0.31
run1	6/4/2010	11:59:00	3.71	3.99	22.26	14.46	30.51	-0.34
run1	6/4/2010	11:59:15	3.70	4.00	22.47	15.00	30.48	-0.35
run1	6/4/2010	11:59:30	3.69	4.04	22.58	15.14	30.45	-0.32
run1	6/4/2010	11:59:45	3.71	4.05	22.61	13.85	30.46	-0.38
run1	6/4/2010	12:00:00	3.73	4.05	22.86	13.54	30.50	-0.32
run1	6/4/2010	12:00:15	3.77	4.05	22.93	13.12	30.56	-0.35

name			1 O2	2 CO2	3 NOx	4 CO	5 SO2	6 THC
run1	6/4/2010	12:00:30	3.79	4.04	22.87	13.10	30.58	-0.30
run1	6/4/2010	12:00:45	3.84	4.03	22.73	14.81	30.57	-0.31
run1	6/4/2010	12:01:00	3.88	4.02	22.41	16.25	30.55	-0.32
run1	6/4/2010	12:01:15	3.90	4.01	22.40	16.57	30.51	-0.33
run1	6/4/2010	12:01:30	3.89	4.00	22.37	16.65	30.46	-0.32
run1	6/4/2010	12:01:45	3.89	4.01	22.30	16.14	30.38	-0.31
run1	6/4/2010	12:02:00	3.85	4.00	22.57	15.40	30.31	-0.38
run1	6/4/2010	12:02:15	3.86	4.01	22.52	15.70	30.30	-0.33
run1	6/4/2010	12:02:30	3.90	4.00	22.55	16.01	30.33	-0.31
run1	6/4/2010	12:02:45	3.87	4.01	22.72	15.08	30.25	-0.34
run1	6/4/2010	12:03:00	3.86	4.01	22.72	14.12	30.19	-0.34
run1	6/4/2010	12:03:15	3.87	4.01	22.72	13.15	30.17	-0.33
run1	6/4/2010	12:03:30	3.89	4.00	22.66	12.43	30.16	-0.35
run1	6/4/2010	12:03:45	3.88	4.01	22.65	11.74	30.05	-0.35
run1	6/4/2010	12:04:00	3.89	4.00	22.88	12.16	29.98	-0.39
run1	6/4/2010	12:04:15	3.90	4.00	22.80	13.77	29.99	-0.34
run1	6/4/2010	12:04:30	3.92	3.99	22.65	14.22	30.02	-0.31
run1	6/4/2010	12:04:45	3.91	3.99	22.49	13.35	30.05	-0.37
run1	6/4/2010	12:05:00	3.89	4.00	22.54	12.13	29.96	-0.35
run1	6/4/2010	12:05:15	3.85	4.01	22.72	11.19	29.89	-0.35
run1	6/4/2010	12:05:30	3.86	4.01	22.83	11.23	29.98	-0.42
run1	6/4/2010	12:05:45	3.93	3.97	22.71	13.23	30.11	-0.28
run1	6/4/2010	12:06:00	3.93	3.97	22.29	14.29	30.26	-0.12
run1	6/4/2010	12:06:15	3.88	3.96	22.21	13.97	30.42	-0.15
run1	6/4/2010	12:06:30	3.88	3.94	22.15	14.15	30.56	-0.16
run1	6/4/2010	12:06:45	3.84	3.95	22.06	14.12	30.71	-0.14
run1	6/4/2010	12:07:00	3.80	3.97	22.11	13.31	30.75	-0.13
run1	6/4/2010	12:07:15	3.79	3.97	22.17	13.09	30.76	-0.14
run1	6/4/2010	12:07:30	3.75	3.97	22.20	13.80	30.71	-0.15
run1	6/4/2010	12:07:45	3.74	3.98	22.20	14.18	30.64	-0.12
run1	6/4/2010	12:08:00	3.76	3.99	22.25	13.95	30.62	-0.09
run1	6/4/2010	12:08:15	3.72	4.02	22.32	13.43	30.50	-0.07
run1	6/4/2010	12:08:30	3.74	4.03	22.37	13.73	30.49	-0.08
run1	6/4/2010	12:08:45	3.79	4.02	22.40	15.27	30.63	-0.11
run1	6/4/2010	12:09:00	3.78	4.02	22.16	15.92	30.79	-0.09
run1	6/4/2010	12:09:15	3.76	4.03	22.10	14.45	30.88	-0.09
run1	6/4/2010	12:09:30	3.75	4.03	22.14	13.55	30.90	-0.12
run1	6/4/2010	12:09:45	3.70	4.05	22.19	13.04	30.99	-0.15
run1	6/4/2010	12:10:00	3.68	4.08	22.13	12.65	31.10	-0.14
run1	6/4/2010	12:10:15	3.64	4.13	22.30	11.65	31.12	-0.12
run1	6/4/2010	12:10:30	3.65	4.14	22.66	10.63	31.07	-0.14
run1	6/4/2010	12:10:45	3.71	4.13	23.12	10.57	31.00	-0.18
run1	6/4/2010	12:11:00	3.81	4.10	22.95	11.75	31.06	-0.17
run1	6/4/2010	12:11:15	3.87	4.06	22.75	12.86	31.01	-0.16
run1	6/4/2010	12:11:30	3.86	4.05	22.52	12.77	30.99	-0.16
run1	6/4/2010	12:11:45	3.82	4.06	22.34	11.53	30.98	-0.20
run1	6/4/2010	12:12:00	3.79	4.07	22.47	10.99	30.89	-0.13
run1	6/4/2010	12:12:15	3.80	4.07	22.55	11.55	30.70	-0.14
run1	6/4/2010	12:12:30	3.82	4.07	22.55	12.32	30.55	-0.17
run1	6/4/2010	12:12:45	3.82	4.06	22.55	12.98	30.49	-0.17
run1	6/4/2010	12:13:00	3.82	4.06	22.52	13.33	30.52	-0.16
run1	6/4/2010	12:13:15	3.81	4.07	22.63	12.63	30.59	-0.18
run1	6/4/2010	12:13:30	3.81	4.08	22.75	11.71	30.61	-0.18
run1	6/4/2010	12:13:45	3.77	4.08	22.83	11.08	30.55	-0.17
run1	6/4/2010	12:14:00	3.80	4.07	22.88	11.98	30.49	-0.14
run1	6/4/2010	12:14:15	3.86	4.09	22.82	12.93	30.34	-0.11
run1	6/4/2010	12:14:30	3.83	4.10	22.85	12.09	30.23	-0.16
run1	6/4/2010	12:14:45	3.79	4.10	22.92	10.39	30.22	-0.19
run1	6/4/2010	12:15:00	3.81	4.08	22.88	10.56	30.29	-0.14
run1	6/4/2010	12:15:15	3.84	4.08	22.80	11.33	30.38	-0.13
run1	6/4/2010	12:15:30	3.84	4.08	22.78	11.68	30.50	-0.09
run1	6/4/2010	12:15:45	3.88	4.09	22.83	11.32	30.53	-0.11
run1	6/4/2010	12:16:00	3.93	4.05	22.89	11.55	30.51	-0.12
run1	6/4/2010	12:16:15	3.95	4.02	22.44	14.31	30.55	-0.04
run1	6/4/2010	12:16:30	3.93	4.01	22.13	15.61	30.57	-0.09
run1	6/4/2010	12:16:45	3.84	4.03	22.03	14.25	30.60	-0.11
run1	6/4/2010	12:17:00	3.80	4.06	22.22	12.40	30.62	-0.15
run1	6/4/2010	12:17:15	3.80	4.09	22.56	11.02	30.52	-0.16
run1	6/4/2010	12:17:30	3.78	4.10	22.74	10.36	30.46	-0.12
run1	6/4/2010	12:17:45	3.73	4.10	22.72	9.58	30.55	-0.12
run1	6/4/2010	12:18:00	3.74	4.08	22.80	9.08	30.67	-0.08
run1	6/4/2010	12:18:15	3.77	4.07	22.92	9.42	30.74	-0.11
run1	6/4/2010	12:18:30	3.77	4.06	22.92	9.75	30.75	-0.09
run1	6/4/2010	12:18:45	3.80	4.03	22.80	9.83	30.67	-0.12
run1	6/4/2010	12:19:00	3.80	4.03	22.72	9.77	30.61	-0.12
run1	6/4/2010	12:19:15	3.78	4.06	22.95	9.63	30.58	-0.07
run1	6/4/2010	12:19:30	3.80	4.04	22.98	9.46	30.62	-0.13
run1	6/4/2010	12:19:45	3.83	4.01	22.69	9.96	30.64	-0.09
run1	6/4/2010	12:20:00	3.85	3.99	22.39	11.99	30.62	-0.09
run1	6/4/2010	12:20:15	3.89	3.99	22.14	15.89	30.61	-0.01
run1	6/4/2010	12:20:30	3.85	3.98	22.04	16.32	30.63	-0.04
run1	6/4/2010	12:20:45	3.77	4.00	22.05	15.53	30.71	-0.04
run1	6/4/2010	12:21:00	3.74	4.02	22.20	14.03	30.74	-0.10
run1	6/4/2010	12:21:15	3.72	4.03	22.40	11.40	30.80	-0.14
run1	6/4/2010	12:21:30	3.74	4.02	22.48	10.85	30.85	-0.16
run1	6/4/2010	12:21:45	3.74	4.01	22.48	12.56	30.90	-0.09
run1	6/4/2010	12:22:00	3.71	3.99	22.34	12.99	30.90	-0.07
run1	6/4/2010	12:22:15	3.66	3.99	22.32	11.93	30.97	-0.08
run1	6/4/2010	12:22:30	3.64	4.00	22.37	11.06	30.96	-0.04
run1	6/4/2010	12:22:45	3.63	4.00	22.46	10.36	30.98	-0.10
run1	6/4/2010	12:23:00	3.65	4.01	22.45	10.43	30.99	-0.14
run1	6/4/2010	12:23:15	3.64	4.02	22.48	10.23	31.04	-0.12
run1	6/4/2010	12:23:30	3.61	4.03	22.54	9.74	31.07	-0.11
run1	6/4/2010	12:23:45	3.65	4.04	22.65	10.21	31.19	-0.10
run1	6/4/2010	12:24:00	3.65	4.01	22.68	11.51	31.32	-0.15
run1	6/4/2010	12:24:15	3.66	4.00	22.43	11.98	31.38	-0.09
run1	6/4/2010	12:24:30	3.63	4.00	22.31	10.88	31.36	-0.12
run1	6/4/2010	12:24:45	3.60	4.02	22.36	9.85	31.28	-0.10
run1	6/4/2010	12:25:00	3.61	4.03	22.54	8.99	31.34	-0.14
run1	6/4/2010	12:25:15	3.62	4.02	22.57	8.94	31.38	-0.13

name			1 O2	2 CO2	3 NOx	4 CO	5 SO2	6 THC
run1	6/4/2010	12:25:30	3.68	3.98	22.47	10.00	31.35	-0.14
run1	6/4/2010	12:25:45	3.71	3.96	22.23	11.48	31.36	-0.16
run1	6/4/2010	12:26:00	3.68	3.96	22.01	11.92	31.37	-0.12
run1	6/4/2010	12:26:15	3.61	3.99	22.02	11.14	31.46	-0.15
run1	6/4/2010	12:26:30	3.59	4.01	22.16	10.63	31.47	-0.13
run1	6/4/2010	12:26:45	3.58	4.03	22.37	10.14	31.38	-0.17
run1	6/4/2010	12:27:00	3.59	4.03	22.43	9.90	31.36	-0.16
run1	6/4/2010	12:27:15	3.63	4.02	22.45	9.80	31.37	-0.19
run1	6/4/2010	12:27:30	3.69	3.97	22.30	10.91	31.37	-0.11
run1	6/4/2010	12:27:45	3.75	3.93	21.79	13.92	31.24	-0.07
run1	6/4/2010	12:28:00	3.73	3.91	21.21	16.04	31.04	-0.01
run1	6/4/2010	12:28:15	3.66	3.94	20.99	17.00	31.09	-0.07
run1	6/4/2010	12:28:30	3.52	3.99	21.10	15.37	31.39	-0.08
run1	6/4/2010	12:28:45	3.41	4.02	21.40	13.36	31.77	-0.10
run1	6/4/2010	12:29:00	3.41	4.06	21.54	12.16	32.11	-0.12
run1	6/4/2010	12:29:15	3.38	4.07	22.02	9.89	32.30	-0.14
run1	6/4/2010	12:29:30	3.34	4.08	22.26	8.23	32.36	-0.15
run1	6/4/2010	12:29:45	3.37	4.07	22.33	7.76	32.38	-0.14
run1	6/4/2010	12:30:00	3.44	4.05	22.41	7.93	32.38	-0.11
run1	6/4/2010	12:30:15	3.50	4.03	22.35	9.19	32.30	-0.16
run1	6/4/2010	12:30:30	3.54	4.03	22.20	10.08	32.20	-0.17
run1	6/4/2010	12:30:45	3.51	4.06	21.98	10.16	32.05	-0.08
run1	6/4/2010	12:31:00	3.53	4.07	22.12	9.80	31.96	-0.17
run1	6/4/2010	12:31:15	3.55	4.08	22.27	10.04	31.98	-0.11
run1	6/4/2010	12:31:30	3.62	4.04	22.12	11.28	32.06	-0.07
run1	6/4/2010	12:31:45	3.61	4.03	21.74	12.26	32.15	-0.08
run1	6/4/2010	12:32:00	3.56	4.04	21.78	12.22	32.30	-0.12
run1	6/4/2010	12:32:15	3.52	4.08	21.83	11.53	32.45	-0.14
run1	6/4/2010	12:32:30	3.46	4.12	21.91	11.08	32.53	-0.08
run1	6/4/2010	12:32:45	3.44	4.15	22.08	9.81	32.61	-0.16
run1	6/4/2010	12:33:00	3.45	4.15	22.42	8.83	32.61	-0.14
run1	6/4/2010	12:33:15	3.50	4.12	22.52	8.75	32.50	-0.12
run1	6/4/2010	12:33:30	3.52	4.11	22.39	9.84	32.26	-0.14
run1	6/4/2010	12:33:45	3.54	4.11	22.11	10.37	31.72	-0.13
run1	6/4/2010	12:34:00	3.52	4.13	22.14	9.88	31.50	-0.15
run1	6/4/2010	12:34:15	3.44	4.19	22.57	8.66	31.57	-0.14
run1	6/4/2010	12:34:30	3.42	4.27	22.95	7.64	31.72	-0.13
run1	6/4/2010	12:34:45	3.52	4.30	23.30	6.19	31.77	-0.15
run1	6/4/2010	12:35:00	3.60	4.31	23.70	5.07	31.64	-0.18
run1	6/4/2010	12:35:15	3.73	4.28	23.81	4.89	31.45	-0.18
run1	6/4/2010	12:35:30	3.84	4.27	23.75	5.35	31.20	-0.17
run1	6/4/2010	12:35:45	3.90	4.25	23.58	6.26	30.94	-0.16
run1	6/4/2010	12:36:00	3.94	4.24	23.47	6.79	30.71	-0.18
run1	6/4/2010	12:36:15	3.94	4.25	23.44	7.11	30.50	-0.18
run1	6/4/2010	12:36:30	3.97	4.26	23.39	7.81	30.35	-0.18
run1	6/4/2010	12:36:45	3.99	4.28	23.34	7.99	30.28	-0.17
run1	6/4/2010	12:37:00	3.98	4.30	23.41	7.15	30.21	-0.17
run1	6/4/2010	12:37:15	4.01	4.31	23.39	6.20	30.16	-0.17
run1	6/4/2010	12:37:30	4.06	4.30	23.30	6.02	30.12	-0.16
run1	6/4/2010	12:37:45	4.09	4.28	23.15	6.45	30.10	-0.17
run1	6/4/2010	12:38:00	4.12	4.26	23.14	7.11	30.06	-0.13
run1	6/4/2010	12:38:15	4.15	4.24	23.06	8.28	29.99	-0.18
run1	6/4/2010	12:38:30	4.15	4.23	23.02	8.94	29.92	-0.16
run1	6/4/2010	12:38:45	4.15	4.25	23.06	8.77	29.81	-0.15
run1	6/4/2010	12:39:00	4.13	4.27	23.06	8.27	29.67	-0.16
run1	6/4/2010	12:39:15	4.08	4.30	23.03	7.37	29.62	-0.16
run1	6/4/2010	12:39:30	4.08	4.30	23.05	6.93	29.59	-0.19
run1	6/4/2010	12:39:45	4.09	4.29	23.12	7.35	29.48	-0.19
run1	6/4/2010	12:40:00	4.04	4.33	23.14	7.48	29.38	-0.16
run1	6/4/2010	12:40:15	4.00	4.35	23.18	7.20	29.37	-0.19
run1	6/4/2010	12:40:30	4.02	4.36	23.27	6.22	29.29	-0.20
run1	6/4/2010	12:40:45	4.07	4.35	23.30	5.48	29.24	-0.20
run1	6/4/2010	12:41:00	4.13	4.34	23.11	5.90	29.27	-0.14
run1	6/4/2010	12:41:15	4.17	4.31	23.01	7.03	29.32	-0.18
run1	6/4/2010	12:41:30	4.19	4.31	23.00	8.00	29.28	-0.18
run1	6/4/2010	12:41:45	4.20	4.31	23.01	7.64	29.13	-0.20
run1	6/4/2010	12:42:00	4.16	4.31	23.10	6.83	29.00	-0.21
run1	6/4/2010	12:42:15	4.13	4.31	22.99	7.14	28.97	-0.16
run1	6/4/2010	12:42:30	4.13	4.34	22.88	7.92	28.90	-0.18
run1	6/4/2010	12:42:45	4.15	4.34	22.89	7.67	28.69	-0.21
run1	6/4/2010	12:43:00	4.18	4.32	23.10	6.80	28.40	-0.21
run1	6/4/2010	12:43:15	4.20	4.30	23.03	6.34	28.31	-0.18
run1	6/4/2010	12:43:30	4.22	4.29	22.90	6.47	28.49	-0.16
run1	6/4/2010	12:43:45	4.22	4.28	22.80	6.62	28.75	-0.18
run1	6/4/2010	12:44:00	4.19	4.27	22.82	7.16	28.98	-0.18
run1	6/4/2010	12:44:15	4.20	4.27	22.86	8.37	29.15	-0.19
run1	6/4/2010	12:44:30	4.18	4.28	22.89	8.64	29.29	-0.19
run1	6/4/2010	12:44:45	4.18	4.28	22.93	7.83	29.37	-0.18
run1	6/4/2010	12:45:00	4.15	4.28	23.06	7.30	29.50	-0.19
run1	6/4/2010	12:45:15	4.15	4.27	23.01	7.11	29.60	-0.18
run1	6/4/2010	12:45:30	4.11	4.26	23.01	7.04	29.65	-0.18
run1	6/4/2010	12:45:45	4.15	4.24	23.06	8.79	29.70	-0.15
run1	6/4/2010	12:46:00	4.19	4.21	22.91	9.95	29.51	-0.13
run1	6/4/2010	12:46:15	4.16	4.21	22.91	10.15	29.24	-0.13
run1	6/4/2010	12:46:30	4.10	4.25	22.98	9.39	29.30	-0.10
run1	6/4/2010	12:46:45	4.04	4.29	23.11	7.67	29.60	-0.07
run1	6/4/2010	12:47:00	3.96	4.32	23.35	6.79	29.91	-0.10
run1	6/4/2010	12:47:15	3.93	4.34	23.40	6.91	30.22	-0.12
run1	6/4/2010	12:47:30	3.93	4.34	23.44	6.65	30.41	-0.14
run1	6/4/2010	12:47:45	3.87	4.36	23.53	6.04	30.55	-0.12
run1	6/4/2010	12:48:00	3.87	4.37	23.61	5.75	30.66	-0.15
run1	6/4/2010	12:48:15	3.91	4.35	23.62	5.54	30.60	-0.12
run1	6/4/2010	12:48:30	3.95	4.32	23.61	5.02	30.43	-0.13
run1	6/4/2010	12:48:45	3.91	4.31	23.55	4.86	30.28	-0.11
run1	6/4/2010	12:49:00	3.96	4.30	23.33	5.37	30.19	-0.13
run1	6/4/2010	12:49:15	3.98	4.30	23.23	5.58	30.03	-0.13
run1	6/4/2010	12:49:30	4.03	4.33	23.16	5.31	29.83	-0.17
run1	6/4/2010	12:49:45	4.05	4.33	23.12	4.88	29.67	-0.14
run1	6/4/2010	12:50:00	4.07	4.35	23.16	4.64	29.56	-0.15
run1	6/4/2010	12:50:15	4.11	4.35	23.17	5.23	29.49	-0.13

name			1 O2	2 CO2	3 NOx	4 CO	5 SO2	6 THC				
run1	6/4/2010	12:50:30	4.14	4.34	23.16	6.21	29.39	-0.15				
run1	6/4/2010	12:50:45	4.19	4.32	23.05	6.91	29.43	-0.12				
run1	6/4/2010	12:51:00	4.20	4.32	22.90	6.76	29.47	-0.14				
run1	6/4/2010	12:51:15	4.20	4.33	22.78	7.39	29.44	-0.15				
run1	6/4/2010	12:51:30	4.20	4.34	22.79	8.03	29.46	-0.13				
run1	6/4/2010	12:51:45	4.18	4.35	22.83	7.87	29.49	-0.09				
run1	6/4/2010	12:52:00	4.15	4.34	23.04	7.08	29.52	-0.12				
run1	6/4/2010	12:52:15	4.12	4.34	22.97	6.32	29.51	-0.12				
run1	6/4/2010	12:52:30	4.07	4.36	22.94	5.82	29.39	-0.12				
run1	6/4/2010	12:52:45	4.08	4.37	23.05	5.54	29.17	-0.07				
run1	6/4/2010	12:53:00	4.12	4.37	23.11	5.42	29.07	-0.10				
run1	6/4/2010	12:53:15	4.13	4.36	23.12	5.23	29.10	-0.12				
run1	6/4/2010	12:53:30	4.17	4.33	23.08	6.02	29.07	-0.11				
run1	6/4/2010	12:53:45	4.21	4.32	22.99	7.44	28.98	-0.12				
run1	6/4/2010	12:54:00	4.21	4.31	23.11	7.82	28.98	-0.07				
run1	6/4/2010	12:54:15	4.21	4.31	23.18	7.75	29.09	-0.09				
run1	6/4/2010	12:54:30	4.18	4.32	23.18	7.56	29.23	-0.08				
run1	6/4/2010	12:54:45	4.19	4.35	23.14	7.39	29.34	-0.13				
run1	6/4/2010	12:55:00	4.16	4.37	23.24	6.86	29.36	-0.14				
run1	6/4/2010	12:55:15	4.13	4.38	23.22	5.76	29.28	-0.09				
run1	6/4/2010	12:55:30	4.11	4.38	23.17	5.30	28.94	-0.14				
run1	6/4/2010	12:55:45	4.10	4.37	23.13	5.48	28.79	-0.08				
run1	6/4/2010	12:56:00	4.10	4.36	23.24	6.04	28.89	-0.09				
run1	6/4/2010	12:56:15	4.08	4.36	23.31	6.87	29.21	-0.05				
run1	6/4/2010	12:56:30	4.10	4.35	23.24	7.42	29.44	-0.09				
run1	6/4/2010	12:56:45	4.10	4.35	23.14	7.13	29.47	-0.08				
run1	6/4/2010	12:57:00	4.09	4.35	23.31	6.69	29.40	-0.11				
run1	6/4/2010	12:57:15	4.11	4.32	23.35	6.63	29.46	-0.08				
run1	6/4/2010	12:57:30	4.16	4.29	23.40	6.77	29.64	-0.09				
run1	6/4/2010	12:57:45	4.17	4.27	23.52	6.98	29.74	-0.10				
run1	6/4/2010	12:58:00	4.20	4.24	23.48	6.93	29.76	-0.05				
run1	6/4/2010	12:58:15	4.19	4.21	23.39	6.65	29.75	-0.09				
run1	6/4/2010	12:58:30	4.12	4.23	23.37	6.34	29.72	-0.09				
run1	6/4/2010	12:58:45	4.03	4.29	23.44	6.38	29.69	-0.10				
run1	6/4/2010	12:59:00	3.94	4.34	23.58	6.06	29.65	-0.01				
run1	6/4/2010	12:59:15	3.92	4.38	23.63	5.41	29.60	-0.06				
run1	6/4/2010	12:59:30	3.91	4.40	23.67	5.12	29.62	-0.07				
run1	6/4/2010	12:59:45	3.92	4.40	23.74	5.10	29.68	-0.01				
run1	6/4/2010	13:00:00	3.93	4.39	23.78	5.10	29.73	-0.08				
run1	6/4/2010	13:00:15	3.99	4.37	23.75	4.74	29.74	-0.06				
run1	6/4/2010	13:00:30	3.99	4.35	23.74	4.22	29.67	-0.07				
run1	6/4/2010	13:00:45	4.03	4.32	23.73	4.65	29.64	-0.07				
run1	6/4/2010	13:01:00	4.03	4.34	23.57	5.27	29.66	-0.10				
run1	6/4/2010	13:01:15	3.98	4.40	23.69	4.90	29.58	-0.03				
run1	6/4/2010	13:01:30	3.86	4.45	23.79	3.84	29.49	-0.08				
run1	6/4/2010	13:01:45	3.80	4.45	23.81	3.22	29.37	-0.05				
run1	6/4/2010	13:02:00	3.82	4.46	23.71	3.10	29.10	-0.05				
run1	6/4/2010	13:02:15	3.85	4.45	23.65	2.82	28.95	-0.06				
run1	6/4/2010	13:02:30	3.88	4.43	23.56	2.63	28.97	-0.05				
run1	6/4/2010	13:02:45	3.90	4.40	23.43	3.04	29.12	-0.09				
run1	6/4/2010	13:03:00	3.92	4.41	23.38	3.67	29.16	-0.04				
run1	6/4/2010	13:03:15	3.92	4.41	23.47	3.53	29.13	-0.06				
run1	6/4/2010	13:03:30	3.91	4.40	23.45	3.02	29.17	-0.04				
run1	6/4/2010	13:03:45	3.90	4.38	23.26	2.79	29.18	-0.04				
run1	6/4/2010	13:04:00	3.91	4.37	23.14	2.95	29.20	-0.04				
run1	6/4/2010	13:04:15	3.93	4.37	23.22	2.97	29.17	-0.07				
run1	6/4/2010	13:04:30	3.92	4.37	23.33	3.00	29.09	-0.07				
run1	6/4/2010	13:04:45	3.94	4.36	23.36	3.28	28.86	-0.07				
run1	6/4/2010	13:05:00	3.97	4.34	23.31	3.47	28.65	-0.04				
run1	6/4/2010	13:05:15	4.06	4.32	23.44	9.90 3.75	28.66	-0.07				
run1	6/4/2010	13:05:30	4.16 2.63	4.33 4.15	23.46	3.90	30.3 028.72	-0.08		60		
run1	6/4/2010	13:05:45	4.15	4.33	23.35	4.05	28.83	-0.09				
averun2 1	6/4/2010	12:45:00	~~4.05~~	~~4.34~~	~~23.31~~ 22.68	~~5.74~~	~~29.46~~	-0.10		21		
scg7	6/4/2010	13:08:30	12.49	2.36	22.65	3.44	21.24	-0.09	ALM025404/cg7	SO2	43.6	0
scg7	6/4/2010	13:08:45	15.97	1.04	18.23	1.95	13.18	-0.10	ALM025404/cg7	SO2	43.6	0
scg7	6/4/2010	13:09:00	6.83	2.53	6.54	3.49	15.37	-0.06	ALM025404/cg7	SO2	43.6	0
scg7	6/4/2010	13:09:15	1.41	1.02	11.29	7.69	22.06	0.75	ALM025404/cg7	SO2	43.6	0
scg7	6/4/2010	13:09:30	0.28	0.08	10.51	5.88	31.44	35.86	ALM025404/cg7	SO2	43.6	0
scg7	6/4/2010	13:09:45	0.15	0.00	1.46	1.97	36.24	0.60	ALM025404/cg7	SO2	43.6	0
scg7	6/4/2010	13:10:00	0.12	-0.02	0.55	0.44	38.53	0.08	ALM025404/cg7	SO2	43.6	0
scg7	6/4/2010	13:10:15	0.09	-0.02	0.34	0.18	39.74	0.00	ALM025404/cg7	SO2	43.6	0
scg7	6/4/2010	13:10:30	0.10	-0.02	0.29	0.14	40.42	-0.03	ALM025404/cg7	SO2	43.6	0
scg7	6/4/2010	13:10:45	0.10	-0.02	0.27	0.10	40.80	-0.04	ALM025404/cg7	SO2	43.6	0
scg7	6/4/2010	13:11:00	0.10	-0.02	0.25	0.10	41.05	-0.03	ALM025404/cg7	SO2	43.6	0
scg7	6/4/2010	13:11:15	0.10	-0.02	0.24	0.10	41.23	-0.04	ALM025404/cg7	SO2	43.6	0
scg7	6/4/2010	13:11:30	0.11	-0.02	0.24	0.12	41.39	-0.04	ALM025404/cg7	SO2	43.6	0
scg7	6/4/2010	13:11:45	0.12	-0.02	0.24	0.09	41.51	-0.03	ALM025404/cg7	SO2	43.6	0
o2zero1	6/4/2010	13:11:45	0.12	-0.02	0.24	0.09	41.51	-0.03	ALM025404/cg7	SO2	43.6	0
co2zero1	6/4/2010	13:11:45	0.12	-0.02	0.24	0.09	41.51	-0.03	ALM025404/cg7	SO2	43.6	0
noxzero1	6/4/2010	13:11:45	0.12	-0.02	0.24	0.09	41.51	-0.03	ALM025404/cg7	SO2	43.6	0
cozero1	6/4/2010	13:11:45	0.12	-0.02	0.24	0.09	41.51	-0.03	ALM025404/cg7	SO2	43.6	0
so2span1	6/4/2010	13:11:45	0.12	-0.02	0.24	0.09	41.51	-0.03	ALM025404/cg7	SO2	43.6	0
scg11	6/4/2010	13:12:00	0.11	-0.02	0.21	0.11	41.58	-0.02	ALM057740/cg11	O2	20.9	0
scg11	6/4/2010	13:12:15	0.10	-0.02	0.20	0.11	41.62	-0.01	ALM057740/cg11	O2	20.9	0
scg11	6/4/2010	13:12:30	0.14	0.00	0.20	0.10	41.70	-0.03	ALM057740/cg11	O2	20.9	0
scg11	6/4/2010	13:12:45	1.49	1.31	0.91	0.36	40.73	-0.03	ALM057740/cg11	O2	20.9	0
scg11	6/4/2010	13:13:00	3.37	3.79	4.57	1.21	36.95	-0.03	ALM057740/cg11	O2	20.9	0
thczero1	6/4/2010	13:13:00	3.37	3.79	4.57	1.21	36.95	-0.03	ALM057740/cg11	O2	20.9	0
scg9	6/4/2010	13:13:15	3.73	4.29	16.87	2.15	33.97	-0.03	ALM05391/cg9	O2	11.8 CO2	12.1
scg9	6/4/2010	13:13:30	3.82	4.32	22.83	2.48	32.28	-0.05	ALM05391/cg9	O2	11.8 CO2	12.1
scg9	6/4/2010	13:13:45	3.83	4.27	23.37	2.84	31.24	-0.06	ALM05391/cg9	O2	11.8 CO2	12.1
scg9	6/4/2010	13:14:00	4.70	4.30	23.37	2.89	29.91	-0.06	ALM05391/cg9	O2	11.8 CO2	12.1
scg9	6/4/2010	13:14:15	9.68	8.94	14.19	1.87	19.67	-0.07	ALM05391/cg9	O2	11.8 CO2	12.1
scg9	6/4/2010	13:14:30	11.50	11.74	6.13	0.84	10.20	-0.09	ALM05391/cg9	O2	11.8 CO2	12.1
scg9	6/4/2010	13:14:45	11.66	11.97	0.59	0.33	6.25	18.95	ALM05391/cg9	O2	11.8 CO2	12.1
scg9	6/4/2010	13:15:00	11.65	12.00	0.31	0.25	4.37	45.11	ALM05391/cg9	O2	11.8 CO2	12.1
scg9	6/4/2010	13:15:15	11.64	12.01	0.20	0.22	3.35	45.51	ALM05391/cg9	O2	11.8 CO2	12.1
scg9	6/4/2010	13:15:30	11.65	12.02	0.18	0.22	2.68	45.68	ALM05391/cg9	O2	11.8 CO2	12.1
scg9	6/4/2010	13:15:45	11.68	12.03	0.17	0.27	2.26	45.77	ALM05391/cg9	O2	11.8 CO2	12.1
scg9	6/4/2010	13:16:00	11.68	12.04	0.17	0.24	1.96	45.87	ALM05391/cg9	O2	11.8 CO2	12.1

name			1 O2	2 CO2	3 NOx	4 CO	5 SO2	6 THC
scg9	6/4/2010	13:16:15	11.69	12.04	0.15	0.23	1.70	45.95
scg9	6/4/2010	13:16:30	11.67	12.05	0.15	0.21	1.52	46.01
scg9	6/4/2010	13:16:45	11.66	12.05	0.15	0.24	1.41	45.95
scg9	6/4/2010	13:17:00	11.66	12.06	0.15	0.23	1.32	46.09
so2zero1	6/4/2010	13:17:00	11.66	12.06	0.15	0.23	1.32	46.09
o2span1	6/4/2010	13:17:00	11.66	12.06	0.15	0.23	1.32	46.09
co2span1	6/4/2010	13:17:00	11.66	12.06	0.15	0.23	1.32	46.09
scg2	6/4/2010	13:17:15	11.66	12.07	0.15	0.25	1.27	46.03
scg2	6/4/2010	13:17:30	11.66	12.08	0.15	0.25	1.21	45.78
scg13	6/4/2010	13:18:00	7.40	8.33	0.15	0.21	1.13	46.05
scg13	6/4/2010	13:18:15	1.54	1.93	13.01	0.08	1.13	46.08
scg13	6/4/2010	13:18:30	0.72	0.62	26.90	0.05	1.22	46.06
scg13	6/4/2010	13:18:45	2.80	2.80	39.92	1.22	5.85	46.08
scg13	6/4/2010	13:19:00	3.95	4.18	31.57	3.41	14.73	46.07
thcspan1	6/4/2010	13:19:00	3.95	4.18	31.57	3.41	14.73	46.07
scg2	6/4/2010	13:19:15	4.09	4.30	25.57	5.69	21.07	46.05
scg2	6/4/2010	13:19:30	3.99	4.38	23.66	5.82	24.54	46.17
scg2	6/4/2010	13:19:45	3.74	4.40	23.79	4.33	26.03	46.03
scg2	6/4/2010	13:20:00	1.92	2.54	24.04	2.86	19.99	46.01
scg2	6/4/2010	13:20:15	0.36	0.41	33.65	1.19	10.29	46.01
scg2	6/4/2010	13:20:30	0.13	0.08	40.15	0.41	5.78	21.94
scg2	6/4/2010	13:20:45	0.11	0.04	43.49	0.17	3.87	0.47
scg2	6/4/2010	13:21:00	0.12	0.03	43.71	0.16	2.85	0.24
scg2	6/4/2010	13:21:15	0.11	0.02	43.82	0.15	2.29	0.09
scg2	6/4/2010	13:21:30	0.10	0.02	43.85	0.19	1.92	0.09
scg2	6/4/2010	13:21:45	0.10	0.02	43.90	0.19	1.68	0.03
scg2	6/4/2010	13:22:00	0.09	0.02	43.92	0.19	1.47	0.00
noxspan1	6/4/2010	13:22:00	0.09	0.02	43.92	0.19	1.47	0.00
scg5	6/4/2010	13:22:15	0.09	0.02	43.90	0.14	1.35	0.05
scg5	6/4/2010	13:22:30	0.10	0.02	43.90	0.14	1.24	0.03
scg5	6/4/2010	13:22:45	0.10	0.02	43.88	0.21	1.20	0.01
scg5	6/4/2010	13:23:00	0.10	0.01	43.91	4.05	1.16	-0.01
scg5	6/4/2010	13:23:15	0.10	0.01	27.61	21.92	1.10	-0.02
scg5	6/4/2010	13:23:30	0.11	0.01	13.27	35.84	1.02	-0.01
scg5	6/4/2010	13:23:45	0.10	0.01	1.36	41.71	0.96	-0.04
scg5	6/4/2010	13:24:00	0.09	0.01	0.73	42.33	0.95	-0.07
scg5	6/4/2010	13:24:15	0.10	0.02	0.46	42.61	0.91	-0.06
scg5	6/4/2010	13:24:30	0.09	0.02	0.40	42.62	0.85	-0.10
scg5	6/4/2010	13:24:45	0.10	0.01	0.35	42.61	0.84	-0.08
cospan1	6/4/2010	13:24:45	0.10	0.01	0.35	42.61	0.84	-0.08
run2	6/4/2010	14:05:00	3.93	3.95	21.96	19.97	30.84	0.00
run2	6/4/2010	14:05:15	3.91	3.96	21.81	21.19	30.92	-0.02
run2	6/4/2010	14:05:30	3.91	3.96	21.73	21.29	30.92	-0.04
run2	6/4/2010	14:05:45	3.93	3.94	21.77	20.83	30.92	-0.05
run2	6/4/2010	14:06:00	3.90	3.95	21.94	20.45	30.98	-0.02
run2	6/4/2010	14:06:15	3.87	3.95	22.18	19.28	31.02	-0.04
run2	6/4/2010	14:06:30	3.84	3.97	22.33	19.10	31.09	-0.11
run2	6/4/2010	14:06:45	3.83	4.00	22.39	19.52	31.09	-0.05
run2	6/4/2010	14:07:00	3.81	4.02	22.39	18.65	31.08	-0.10
run2	6/4/2010	14:07:15	3.84	4.04	22.48	16.53	31.01	-0.09
run2	6/4/2010	14:07:30	3.86	4.03	22.55	15.63	30.96	-0.12
run2	6/4/2010	14:07:45	3.88	4.02	22.55	15.36	30.97	-0.14
run2	6/4/2010	14:08:00	3.90	4.02	22.59	16.16	30.96	-0.09
run2	6/4/2010	14:08:15	3.93	4.00	22.60	17.04	30.93	-0.10
run2	6/4/2010	14:08:30	3.93	4.00	22.58	16.95	30.89	-0.09
run2	6/4/2010	14:08:45	3.98	3.98	22.52	17.41	30.88	-0.07
run2	6/4/2010	14:09:00	3.97	3.95	22.52	18.48	30.90	-0.06
run2	6/4/2010	14:09:15	3.99	3.95	22.26	21.45	30.91	0.01
run2	6/4/2010	14:09:30	3.99	3.97	22.11	22.68	30.94	-0.01
run2	6/4/2010	14:09:45	3.96	4.00	22.13	20.40	30.94	-0.09
run2	6/4/2010	14:10:00	3.93	4.01	22.38	17.70	30.88	-0.12
run2	6/4/2010	14:10:15	3.91	4.01	22.48	16.72	30.89	-0.13
run2	6/4/2010	14:10:30	3.92	4.00	22.50	16.75	30.88	-0.12
run2	6/4/2010	14:10:45	3.90	3.99	22.53	16.12	30.89	-0.12
run2	6/4/2010	14:11:00	3.88	3.99	22.63	15.13	30.89	-0.09
run2	6/4/2010	14:11:15	3.88	3.99	22.66	14.12	30.80	-0.15
run2	6/4/2010	14:11:30	3.90	3.99	22.74	13.80	30.58	-0.12
run2	6/4/2010	14:11:45	3.92	3.96	22.78	14.89	30.41	-0.15
run2	6/4/2010	14:12:00	3.92	3.95	22.55	16.27	30.28	-0.13
run2	6/4/2010	14:12:15	3.90	3.97	22.45	17.31	30.21	-0.12
run2	6/4/2010	14:12:30	3.92	3.97	22.46	17.62	30.27	-0.09
run2	6/4/2010	14:12:45	3.89	3.96	22.53	17.75	30.45	-0.09
run2	6/4/2010	14:13:00	3.88	3.94	22.40	17.53	30.66	-0.10
run2	6/4/2010	14:13:15	3.87	3.93	22.28	18.53	30.77	-0.08
run2	6/4/2010	14:13:30	3.84	3.92	22.19	18.96	30.84	-0.12
run2	6/4/2010	14:13:45	3.82	3.93	22.16	18.98	30.79	-0.13
run2	6/4/2010	14:14:00	3.80	3.97	22.16	18.22	30.72	-0.07
run2	6/4/2010	14:14:15	3.78	3.99	22.52	16.24	30.80	-0.12
run2	6/4/2010	14:14:30	3.77	3.99	22.67	15.36	30.88	-0.14
run2	6/4/2010	14:14:45	3.74	3.97	22.55	15.42	30.95	-0.10
run2	6/4/2010	14:15:00	3.75	3.97	22.54	15.52	31.01	-0.09
run2	6/4/2010	14:15:15	3.77	3.97	22.66	15.27	30.99	-0.11
run2	6/4/2010	14:15:30	3.76	3.96	22.73	15.02	30.93	-0.12
run2	6/4/2010	14:15:45	3.76	3.97	22.66	15.13	30.95	-0.07
run2	6/4/2010	14:16:00	3.78	3.95	22.90	16.25	30.98	-0.07
run2	6/4/2010	14:16:15	3.81	3.92	22.63	16.97	30.96	-0.07
run2	6/4/2010	14:16:30	3.86	3.89	22.41	17.51	30.95	-0.10
run2	6/4/2010	14:16:45	3.86	3.88	22.33	18.43	30.98	-0.07
run2	6/4/2010	14:17:00	3.84	3.90	22.19	18.05	30.99	-0.07
run2	6/4/2010	14:17:15	3.81	3.95	22.29	16.73	31.00	-0.05
run2	6/4/2010	14:17:30	3.79	3.94	22.44	15.94	31.03	-0.08
run2	6/4/2010	14:17:45	3.78	3.94	22.56	16.45	31.01	-0.09
run2	6/4/2010	14:18:00	3.79	3.95	22.38	17.61	31.02	-0.05
run2	6/4/2010	14:18:15	3.80	3.94	22.49	18.64	31.10	-0.05
run2	6/4/2010	14:18:30	3.79	3.94	22.57	19.46	31.01	-0.06
run2	6/4/2010	14:18:45	3.80	3.96	22.64	19.04	30.78	-0.02
run2	6/4/2010	14:19:00	3.78	3.97	22.76	17.01	30.68	-0.11
run2	6/4/2010	14:19:15	3.81	3.96	22.92	15.86	30.69	-0.12
run2	6/4/2010	14:19:30	3.83	3.96	22.99	15.94	30.73	-0.09
run2	6/4/2010	14:19:45	3.81	3.97	23.06	14.44	30.72	-0.08

ALM05391/cg9	O2	11.8 CO2	12.1
ALM05391/cg9	O2	11.8 CO2	12.1
ALM05391/cg9	O2	11.8 CO2	12.1
ALM05391/cg9	O2	11.8 CO2	12.1
ALM05391/cg9	O2	11.8 CO2	12.1
ALM05391/cg9	O2	11.8 CO2	12.1
ALM05391/cg9	O2	11.8 CO2	12.1
BLM001094/cg2	NOx	45.3	0
BLM001094/cg2	NOx	45.3	0
2L1152/cg13	THC	46.4	0
2L1152/cg13	THC	46.4	0
2L1152/cg13	THC	46.4	0
2L1152/cg13	THC	46.4	0
2L1152/cg13	THC	46.4	0
2L1152/cg13	THC	46.4	0
BLM001094/cg2	NOx	45.3	0
BLM001094/cg2	NOx	45.3	0
BLM001094/cg2	NOx	45.3	0
BLM001094/cg2	NOx	45.3	0
BLM001094/cg2	NOx	45.3	0
BLM001094/cg2	NOx	45.3	0
BLM001094/cg2	NOx	45.3	0
BLM001094/cg2	NOx	45.3	0
BLM001094/cg2	NOx	45.3	0
BLM001094/cg2	NOx	45.3	0
BLM001094/cg2	NOx	45.3	0
BLM001094/cg2	NOx	45.3	0
BLM001094/cg2	NOx	45.3	0
BLM001094/cg2	NOx	45.3	0
ALM051832/cg5	CO	42.9	0
ALM051832/cg5	CO	42.9	0
ALM051832/cg5	CO	42.9	0
ALM051832/cg5	CO	42.9	0
ALM051832/cg5	CO	42.9	0
ALM051832/cg5	CO	42.9	0
ALM051832/cg5	CO	42.9	0
ALM051832/cg5	CO	42.9	0
ALM051832/cg5	CO	42.9	0
ALM051832/cg5	CO	42.9	0
ALM051832/cg5	CO	42.9	0
ALM051832/cg5	CO	42.9	0

name			1 O2	2 CO2	3 NOx	4 CO	5 SO2	6 THC
run2	6/4/2010	14:20:00	3.78	4.01	23.17	12.75	30.65	-0.15
run2	6/4/2010	14:20:15	3.86	4.01	23.55	12.27	30.58	-0.11
run2	6/4/2010	14:20:30	3.94	4.00	23.55	13.70	30.51	-0.11
run2	6/4/2010	14:20:45	3.98	3.97	23.16	14.85	30.45	-0.10
run2	6/4/2010	14:21:00	4.02	3.97	23.02	15.17	30.39	-0.09
run2	6/4/2010	14:21:15	4.01	3.97	22.93	16.06	30.32	-0.12
run2	6/4/2010	14:21:30	3.98	3.99	22.95	17.18	30.23	-0.14
run2	6/4/2010	14:21:45	3.94	4.01	23.01	18.04	30.12	-0.11
run2	6/4/2010	14:22:00	3.94	4.03	23.04	17.17	30.07	-0.14
run2	6/4/2010	14:22:15	3.97	4.02	23.31	15.69	30.06	-0.05
run2	6/4/2010	14:22:30	3.96	4.00	23.39	14.87	30.09	-0.01
run2	6/4/2010	14:22:45	3.97	3.99	23.33	14.80	30.05	-0.10
run2	6/4/2010	14:23:00	4.01	3.96	23.27	15.55	29.99	-0.09
run2	6/4/2010	14:23:15	4.01	3.94	23.15	16.50	29.92	-0.09
run2	6/4/2010	14:23:30	4.02	3.93	23.03	17.37	29.88	-0.11
run2	6/4/2010	14:23:45	4.01	3.93	22.90	17.24	29.86	-0.11
run2	6/4/2010	14:24:00	4.01	3.92	23.05	17.58	29.82	-0.12
run2	6/4/2010	14:24:15	4.03	3.93	22.87	19.19	29.82	-0.07
run2	6/4/2010	14:24:30	4.01	3.95	22.86	18.60	29.83	-0.10
run2	6/4/2010	14:24:45	3.97	3.95	23.09	16.66	29.78	-0.15
run2	6/4/2010	14:25:00	3.99	3.94	23.14	16.41	29.74	-0.13
run2	6/4/2010	14:25:15	3.99	3.93	23.15	18.07	29.67	-0.12
run2	6/4/2010	14:25:30	3.97	3.94	23.15	18.58	29.67	-0.10
run2	6/4/2010	14:25:45	3.92	3.95	23.22	16.24	29.63	-0.12
run2	6/4/2010	14:26:00	3.88	3.96	23.38	14.03	29.53	-0.16
run2	6/4/2010	14:26:15	3.89	3.96	23.44	12.85	29.55	-0.17
run2	6/4/2010	14:26:30	3.93	3.94	23.42	13.22	29.61	-0.18
run2	6/4/2010	14:26:45	3.95	3.92	23.28	16.35	29.61	-0.12
run2	6/4/2010	14:27:00	3.96	3.91	22.89	18.81	29.68	-0.11
run2	6/4/2010	14:27:15	3.94	3.92	22.75	18.56	29.62	-0.08
run2	6/4/2010	14:27:30	3.88	3.93	22.75	17.26	29.67	-0.11
run2	6/4/2010	14:27:45	3.84	3.94	22.87	15.70	29.72	-0.11
run2	6/4/2010	14:28:00	3.81	3.94	23.18	14.49	29.73	-0.13
run2	6/4/2010	14:28:15	3.83	3.94	23.15	13.66	29.77	-0.13
run2	6/4/2010	14:28:30	3.83	3.94	23.06	13.61	29.81	-0.16
run2	6/4/2010	14:28:45	3.83	3.94	22.94	14.95	29.84	-0.13
run2	6/4/2010	14:29:00	3.82	3.94	22.97	15.78	29.75	-0.13
run2	6/4/2010	14:29:15	3.81	3.93	23.01	15.42	29.73	-0.16
run2	6/4/2010	14:29:30	3.81	3.91	22.92	15.31	29.81	-0.13
run2	6/4/2010	14:29:45	3.80	3.92	22.79	14.82	29.68	-0.14
run2	6/4/2010	14:30:00	3.79	3.91	22.90	14.60	29.33	-0.16
run2	6/4/2010	14:30:15	3.80	3.90	22.85	15.03	29.22	-0.11
run2	6/4/2010	14:30:30	3.77	3.91	22.77	14.94	29.35	-0.15
run2	6/4/2010	14:30:45	3.72	3.92	22.73	14.79	29.55	-0.14
run2	6/4/2010	14:31:00	3.69	3.94	22.71	13.92	29.75	-0.11
run2	6/4/2010	14:31:15	3.66	3.93	22.93	12.45	29.86	-0.14
run2	6/4/2010	14:31:30	3.65	3.91	22.94	12.39	29.97	-0.15
run2	6/4/2010	14:31:45	3.65	3.91	22.73	12.99	30.02	-0.14
run2	6/4/2010	14:32:00	3.65	3.91	22.76	13.18	30.07	-0.15
run2	6/4/2010	14:32:15	3.66	3.91	22.79	13.42	30.06	-0.12
run2	6/4/2010	14:32:30	3.62	3.90	22.75	13.31	30.10	-0.12
run2	6/4/2010	14:32:45	3.60	3.91	22.63	12.88	30.16	-0.13
run2	6/4/2010	14:33:00	3.59	3.90	22.56	13.22	30.33	-0.11
run2	6/4/2010	14:33:15	3.60	3.89	22.34	13.47	30.51	-0.10
run2	6/4/2010	14:33:30	3.59	3.89	22.22	13.22	30.59	-0.10
run2	6/4/2010	14:33:45	3.53	3.89	22.17	12.95	30.63	-0.10
run2	6/4/2010	14:34:00	3.50	3.91	22.14	12.25	30.70	-0.14
run2	6/4/2010	14:34:15	3.50	3.90	22.28	11.14	30.77	-0.15
run2	6/4/2010	14:34:30	3.46	3.88	22.32	10.88	30.77	-0.16
run2	6/4/2010	14:34:45	3.46	3.86	22.19	11.66	30.77	-0.16
run2	6/4/2010	14:35:00	3.47	3.84	21.97	12.68	30.81	-0.14
run2	6/4/2010	14:35:15	3.45	3.85	21.80	13.95	30.89	-0.13
run2	6/4/2010	14:35:30	3.41	3.87	21.75	14.33	30.84	-0.14
run2	6/4/2010	14:35:45	3.36	3.90	21.82	14.11	30.72	-0.13
run2	6/4/2010	14:36:00	3.32	3.91	21.89	13.54	30.77	-0.13
run2	6/4/2010	14:36:15	3.28	3.93	21.91	12.17	30.94	-0.13
run2	6/4/2010	14:36:30	3.26	3.94	22.03	11.30	31.11	-0.15
run2	6/4/2010	14:36:45	3.30	3.93	22.24	12.04	31.20	-0.14
run2	6/4/2010	14:37:00	3.31	3.92	22.05	13.13	31.24	-0.11
run2	6/4/2010	14:37:15	3.31	3.92	21.93	13.82	31.26	-0.12
run2	6/4/2010	14:37:30	3.34	3.90	21.91	14.18	31.35	-0.14
run2	6/4/2010	14:37:45	3.33	3.91	21.90	13.20	31.48	-0.15
run2	6/4/2010	14:38:00	3.28	3.92	21.98	12.14	31.48	-0.16
run2	6/4/2010	14:38:15	3.27	3.90	22.09	11.58	31.45	-0.15
run2	6/4/2010	14:38:30	3.30	3.90	22.09	11.56	31.38	-0.17
run2	6/4/2010	14:38:45	3.33	3.90	22.01	11.95	31.32	-0.18
run2	6/4/2010	14:39:00	3.35	3.88	22.06	12.47	31.28	-0.17
run2	6/4/2010	14:39:15	3.35	3.89	21.93	12.38	31.27	-0.17
run2	6/4/2010	14:39:30	3.36	3.88	21.82	12.59	31.33	-0.16
run2	6/4/2010	14:39:45	3.40	3.87	21.76	13.69	31.37	-0.10
run2	6/4/2010	14:40:00	3.39	3.86	21.76	14.05	31.36	-0.11
run2	6/4/2010	14:40:15	3.36	3.87	21.73	13.58	31.29	-0.13
run2	6/4/2010	14:40:30	3.33	3.87	21.73	12.92	31.17	-0.12
run2	6/4/2010	14:40:45	3.34	3.87	21.77	12.15	31.04	-0.12
run2	6/4/2010	14:41:00	3.36	3.86	21.96	12.27	31.03	-0.14
run2	6/4/2010	14:41:15	3.39	3.85	21.88	12.88	31.01	-0.12
run2	6/4/2010	14:41:30	3.39	3.85	21.86	13.20	30.98	-0.12
run2	6/4/2010	14:41:45	3.38	3.83	21.93	13.63	31.02	-0.13
run2	6/4/2010	14:42:00	3.39	3.83	21.77	13.87	31.10	-0.14
run2	6/4/2010	14:42:15	3.40	3.82	21.73	13.41	30.90	-0.15
run2	6/4/2010	14:42:30	3.35	3.83	21.73	12.87	30.55	-0.15
run2	6/4/2010	14:42:45	3.35	3.85	21.82	13.47	30.36	-0.10
run2	6/4/2010	15:10:00	3.70	4.04	22.39	14.15	29.39	-0.26
run2	6/4/2010	15:10:15	3.70	4.03	22.43	14.53	29.42	-0.28
run2	6/4/2010	15:10:30	3.70	4.02	22.41	15.53	29.43	-0.25
run2	6/4/2010	15:10:45	3.69	4.03	22.29	15.68	29.37	-0.23
run2	6/4/2010	15:11:00	3.63	4.05	22.33	15.25	29.33	-0.23
run2	6/4/2010	15:11:15	3.65	4.07	22.43	15.51	29.20	-0.17
run2	6/4/2010	15:11:30	3.62	4.06	22.47	15.46	29.11	-0.20
run2	6/4/2010	15:11:45	3.57	4.07	22.53	14.05	29.09	-0.20

name			1 O2	2 CO2	3 NOx	4 CO	5 SO2	6 THC
run2	6/4/2010	15:12:00	3.63	4.05	22.91	12.63	28.99	-0.22
run2	6/4/2010	15:12:15	3.65	4.04	22.74	12.39	28.94	-0.21
run2	6/4/2010	15:12:30	3.61	4.05	22.58	12.43	29.01	-0.22
run2	6/4/2010	15:12:45	3.65	4.03	22.61	13.02	29.02	-0.23
run2	6/4/2010	15:13:00	3.65	4.03	22.40	13.69	29.08	-0.22
run2	6/4/2010	15:13:15	3.62	4.05	22.37	14.02	29.17	-0.21
run2	6/4/2010	15:13:30	3.62	4.06	22.42	13.79	29.21	-0.19
run2	6/4/2010	15:13:45	3.67	4.06	22.50	13.14	29.29	-0.20
run2	6/4/2010	15:14:00	3.62	4.07	22.46	13.12	29.33	-0.21
run2	6/4/2010	15:14:15	3.64	4.07	22.38	13.84	29.38	-0.18
run2	6/4/2010	15:14:30	3.65	4.08	22.29	14.26	29.52	-0.18
run2	6/4/2010	15:14:45	3.64	4.08	22.15	14.43	29.62	-0.18
run2	6/4/2010	15:15:00	3.63	4.07	22.23	14.77	29.57	-0.17
run2	6/4/2010	15:15:15	3.64	4.07	22.18	14.61	29.46	-0.10
run2	6/4/2010	15:15:30	3.62	4.06	22.13	14.51	29.39	-0.11
run2	6/4/2010	15:15:45	3.62	4.06	22.13	14.20	29.40	-0.15
run2	6/4/2010	15:16:00	3.62	4.07	22.11	14.25	29.47	-0.16
run2	6/4/2010	15:16:15	3.61	4.08	22.27	13.91	29.57	-0.18
run2	6/4/2010	15:16:30	3.60	4.09	22.34	13.33	29.67	-0.20
run2	6/4/2010	15:16:45	3.58	4.09	22.27	12.87	29.67	-0.20
run2	6/4/2010	15:17:00	3.56	4.09	22.35	13.23	29.62	-0.21
run2	6/4/2010	15:17:15	3.57	4.10	22.26	14.01	29.63	-0.18
run2	6/4/2010	15:17:30	3.56	4.10	22.23	13.74	29.76	-0.18
run2	6/4/2010	15:17:45	3.55	4.09	22.36	13.75	29.82	-0.19
run2	6/4/2010	15:18:00	3.54	4.08	22.32	13.94	29.78	-0.21
run2	6/4/2010	15:18:15	3.53	4.09	22.24	14.35	29.84	-0.20
run2	6/4/2010	15:18:30	3.55	4.10	22.25	13.95	30.02	-0.16
run2	6/4/2010	15:18:45	3.54	4.10	22.33	13.77	30.23	-0.13
run2	6/4/2010	15:19:00	3.53	4.08	22.29	14.09	30.37	-0.22
run2	6/4/2010	15:19:15	3.55	4.07	22.20	14.82	30.43	-0.18
run2	6/4/2010	15:19:30	3.55	4.07	22.14	14.59	30.41	-0.21
run2	6/4/2010	15:19:45	3.50	4.07	22.20	12.86	30.31	-0.21
run2	6/4/2010	15:20:00	3.49	4.07	22.40	12.54	30.13	-0.25
run2	6/4/2010	15:20:15	3.50	4.08	22.30	13.28	29.96	-0.21
run2	6/4/2010	15:20:30	3.48	4.08	22.25	13.19	29.92	-0.23
run2	6/4/2010	15:20:45	3.48	4.09	22.34	13.33	29.95	-0.24
run2	6/4/2010	15:21:00	3.47	4.09	22.36	12.85	29.98	-0.25
run2	6/4/2010	15:21:15	3.45	4.09	22.47	11.11	29.87	-0.27
run2	6/4/2010	15:21:30	3.46	4.08	22.61	10.24	29.72	-0.26
run2	6/4/2010	15:21:45	3.49	4.06	22.72	10.99	29.69	-0.23
run2	6/4/2010	15:22:00	3.55	4.02	22.48	11.85	29.76	-0.22
run2	6/4/2010	15:22:15	3.57	3.98	22.06	13.16	29.79	-0.28
run2	6/4/2010	15:22:30	3.52	3.98	21.77	14.71	29.85	-0.25
run2	6/4/2010	15:22:45	3.51	3.98	21.62	15.04	29.96	-0.23
run2	6/4/2010	15:23:00	3.46	3.99	21.72	14.32	30.02	-0.21
run2	6/4/2010	15:23:15	3.44	4.00	21.85	13.50	30.13	-0.21
run2	6/4/2010	15:23:30	3.43	4.00	21.89	13.63	30.25	-0.24
run2	6/4/2010	15:23:45	3.37	4.01	21.82	12.65	30.24	-0.25
run2	6/4/2010	15:24:00	3.36	4.03	22.11	11.38	30.21	-0.20
run2	6/4/2010	15:24:15	3.38	4.01	22.25	10.76	30.18	-0.24
run2	6/4/2010	15:24:30	3.38	4.02	22.23	10.87	30.24	-0.22
run2	6/4/2010	15:24:45	3.40	4.01	22.16	11.59	30.40	-0.21
run2	6/4/2010	15:25:00	3.38	4.01	22.00	11.43	30.39	-0.26
run2	6/4/2010	15:25:15	3.40	4.01	22.08	11.47	30.28	-0.25
run2	6/4/2010	15:25:30	3.40	3.99	22.08	11.49	30.18	-0.21
run2	6/4/2010	15:25:45	3.43	3.97	21.87	11.74	30.19	-0.20
run2	6/4/2010	15:26:00	3.44	3.96	21.68	12.38	30.20	-0.25
run2	6/4/2010	15:26:15	3.45	3.94	21.50	13.56	30.21	-0.25
run2	6/4/2010	15:26:30	3.45	3.91	21.35	14.65	30.22	-0.28
run2	6/4/2010	15:26:45	3.42	3.91	21.16	15.51	30.34	-0.20
run2	6/4/2010	15:27:00	3.43	3.91	21.04	16.38	30.56	-0.18
run2	6/4/2010	15:27:15	3.40	3.91	21.07	16.83	30.71	-0.27
run2	6/4/2010	15:27:30	3.34	3.95	21.19	15.75	30.75	-0.24
run2	6/4/2010	15:27:45	3.30	3.97	21.39	14.16	30.75	-0.25
run2	6/4/2010	15:28:00	3.29	3.99	21.49	13.17	30.73	-0.25
run2	6/4/2010	15:28:15	3.32	3.99	21.80	12.23	30.61	-0.20
run2	6/4/2010	15:28:30	3.38	3.96	21.89	12.99	30.46	-0.20
run2	6/4/2010	15:28:45	3.39	3.97	21.70	13.53	30.29	-0.25
run2	6/4/2010	15:29:00	3.37	3.98	21.85	12.79	30.28	-0.27
run2	6/4/2010	15:29:15	3.36	3.99	21.87	12.09	30.37	-0.28
run2	6/4/2010	15:29:30	3.38	3.98	21.80	12.28	30.50	-0.21
run2	6/4/2010	15:29:45	3.39	3.97	21.70	12.91	30.59	-0.21
run2	6/4/2010	15:30:00	3.43	3.95	21.70	13.52	30.54	-0.25
run2	6/4/2010	15:30:15	3.46	3.95	21.61	14.38	30.51	-0.23
run2	6/4/2010	15:30:30	3.49	3.95	21.55	15.11	30.48	-0.22
run2	6/4/2010	15:30:45	3.48	3.95	21.60	14.56	30.49	-0.27
run2	6/4/2010	15:31:00	3.45	3.97	21.76	13.49	30.49	-0.23
run2	6/4/2010	15:31:15	3.43	3.98	21.89	12.52	30.42	-0.27
run2	6/4/2010	15:31:30	3.42	3.98	21.92	12.35	30.35	-0.25
run2	6/4/2010	15:31:45	3.43	3.98	21.87	11.99	30.39	-0.26
run2	6/4/2010	15:32:00	3.46	3.97	21.93	11.76	30.43	-0.29
run2	6/4/2010	15:32:15	3.45	3.97	21.87	11.25	30.37	-0.27
run2	6/4/2010	15:32:30	3.42	3.97	21.84	11.03	30.28	-0.27
run2	6/4/2010	15:32:45	3.43	3.96	21.89	11.50	30.24	-0.28
run2	6/4/2010	15:33:00	3.49	3.93	21.91	12.65	30.26	-0.25
run2	6/4/2010	15:33:15	3.50	3.92	21.68	14.44	30.21	-0.32
run2	6/4/2010	15:33:30	3.47	3.93	21.47	14.89	30.12	-0.31
run2	6/4/2010	15:33:45	3.42	3.94	21.45	13.81	30.04	-0.31
run2	6/4/2010	15:34:00	3.37	3.96	21.71	12.52	30.01	-0.30
run2	6/4/2010	15:34:15	3.35	4.00	22.17	11.30	30.01	-0.28
run2	6/4/2010	15:34:30	3.35	4.01	22.44	10.42	30.10	-0.31
run2	6/4/2010	15:34:45	3.36	4.02	22.51	10.16	30.15	-0.26
run2	6/4/2010	15:35:00	3.35	4.03	22.33	9.86	30.13	-0.31
run2	6/4/2010	15:35:15	3.40	4.02	22.27	10.36	30.18	-0.31
run2	6/4/2010	15:35:30	3.42	4.02	22.29	10.84	30.21	-0.28
run2	6/4/2010	15:35:45	3.52	4.01	22.34	11.83	30.23	-0.22
run2	6/4/2010	15:36:00	3.57	4.00	22.23	12.28	30.16	-0.30
run2	6/4/2010	15:36:15	3.56	4.01	22.26	11.67	30.09	-0.35
run2	6/4/2010	15:36:30	3.58	4.01	22.27	11.23	30.02	-0.34
run2	6/4/2010	15:36:45	3.59	4.01	22.20	11.21	29.95	-0.34

name			1 O2	2 CO2	3 NOx	4 CO	5 SO2	6 THC					
run2	6/4/2010	15:37:00	3.56	4.02	22.12	11.32	29.90	-0.34					
run2	6/4/2010	15:37:15	3.59	4.02	22.30	11.38	29.90	-0.39					
run2	6/4/2010	15:37:30	3.59	4.02	22.42	11.64	29.96	-0.37					
run2	6/4/2010	15:37:45	3.58	4.02	22.44	11.51	29.98	-0.30					
run2	6/4/2010	15:38:00	3.59	4.00	22.50	11.55	29.99	-0.33					
run2	6/4/2010	15:38:15	3.64	4.01	22.51	11.45	30.05	-0.13					
run2	6/4/2010	15:38:30	3.68	3.98	22.43	11.52	30.04	-0.12					
run2	6/4/2010	15:38:45	3.63	4.02	22.35	12.09	29.93	-0.08					
run2	6/4/2010	15:39:00	3.59	4.07	22.52	11.17	29.82	-0.15					
run2	6/4/2010	15:39:15	3.63	4.08	22.89	10.20	29.77	-0.17					
run2	6/4/2010	15:39:30	3.70	4.06	23.04	10.60	29.72	-0.17					
run2	6/4/2010	15:39:45	3.74	4.06	22.96	10.89	29.54	-0.22					
run2	6/4/2010	15:40:00	3.75	4.08	23.09	10.64	29.26	-0.19					
run2	6/4/2010	15:40:15	3.78	4.09	23.34	9.96	29.03	-0.19					
run2	6/4/2010	15:40:30	3.79	4.09	23.49	9.57	28.88	-0.21					
run2	6/4/2010	15:40:45	3.81	4.09	23.54	9.23	28.83	-0.20					
run2	6/4/2010	15:41:00	3.83	4.07	23.63	9.84	28.77	-0.19					
run2	6/4/2010	15:41:15	3.89	4.06	23.54	10.33	28.72	-0.20					
run2	6/4/2010	15:41:30	3.90	4.06	23.52	10.03	28.62	-0.19					
run2	6/4/2010	15:41:45	3.91	4.04	23.56	10.90	28.58	-0.20					
run2	6/4/2010	15:42:00	3.99	4.02	23.29	12.10	28.64	-0.20					
run2	6/4/2010	15:42:15	4.04	3.98	23.01	12.49	28.72	-0.18					
run2	6/4/2010	15:42:30	3.96	3.99	22.77	12.51	28.81	-0.20					
run2	6/4/2010	15:42:45	3.85	4.03	22.68	11.72	28.81	-0.16					
run2	6/4/2010	15:43:00	3.80	4.08	23.02	10.18	28.73	-0.22					
run2	6/4/2010	15:43:15	3.78	4.09	23.36	8.74	28.64	-0.18					
run2	6/4/2010	15:43:30	3.79	4.08	23.47	8.75	28.60	-0.19					
run2	6/4/2010	15:43:45	3.80	4.08	23.38	8.43	28.63	-0.20					
run2	6/4/2010	15:44:00	3.82	4.06	23.47	8.22	28.68	-0.17					
run2	6/4/2010	15:44:15	3.86	4.04	23.34	8.85	28.76	-0.15					
run2	6/4/2010	15:44:30	3.86	3.99	23.14	9.77	28.84	-0.17					
run2	6/4/2010	15:44:45	3.85	3.99	22.93	10.47	28.96	-0.19					
run2	6/4/2010	15:45:00	3.79	4.00	22.99	9.81	28.96	-0.16					
run2	6/4/2010	15:45:15	3.76	4.01	23.00	9.10	28.91	-0.17					
run2	6/4/2010	15:45:30	3.70	4.04	23.05	8.70	28.99	-0.21					
run2	6/4/2010	15:45:45	3.66	4.08	23.23	7.98	29.11	-0.20					
run2	6/4/2010	15:46:00	3.67	4.09	23.54	7.85	29.22	-0.19					
run2	6/4/2010	15:46:15	3.71	4.09	23.59	8.39	29.32	-0.18					
run2	6/4/2010	15:46:30	3.75	4.09	23.60	8.15	29.31	-0.18					
run2	6/4/2010	15:46:45	3.74	4.11	23.68	7.62	29.18	-0.21					
run2	6/4/2010	15:47:00	3.72	4.15	23.74	6.58	29.03	-0.26					
run2	6/4/2010	15:47:15	3.74	4.20	24.10	5.50	28.85	-0.22					
run2	6/4/2010	15:47:30	3.77	4.22	24.33	5.03	28.56	-0.23					
run2	6/4/2010	15:47:45	3.79	4.24	24.41	5.30	28.22	-0.22					
run2	6/4/2010	15:48:00	3.87	4.25	24.35	5.78	28.06	-0.25					
run2	6/4/2010	15:48:15	3.89	4.25	24.29	5.73	27.98	-0.23					
run2	6/4/2010	15:48:30	3.93	4.25	24.19	5.78	27.84	-0.23					
run2	6/4/2010	15:48:45	3.99	4.25	24.08	6.02	27.71	-0.23					
run2	6/4/2010	15:49:00	4.04	4.26	24.12	5.73	27.58	-0.23					
run2	6/4/2010	15:49:15	4.08	4.26	23.93	5.58	27.43	-0.22					
run2	6/4/2010	15:49:30	4.14	4.25	23.74	5.87	27.30	-0.27					
run2	6/4/2010	15:49:45	4.19	4.24	23.63	6.50	27.16	-0.26					
run2	6/4/2010	15:50:00	4.21	4.23	23.54	7.07	27.06	-0.25					
run2	6/4/2010	15:50:15	4.23	4.24	23.43	6.89	26.91	-0.24					
run2	6/4/2010	15:50:30	4.20	4.27	23.37	6.20	26.77	-0.23					
run2	6/4/2010	15:50:45	4.18	4.28	23.41	5.96	26.71	-0.24					
run2	6/4/2010	15:51:00	4.20	4.28	23.46	6.04	26.72	-0.24					
run2	6/4/2010	15:51:15	4.21	4.28	23.54	5.94	26.81	-0.24					
run2	6/4/2010	15:51:30	4.19	4.28	23.52	5.55	26.88	-0.25					
run2	6/4/2010	15:51:45	4.16	4.30	23.36	5.14	26.96	-0.26					
scg7	6/4/2010	15:52:00	4.14	4.32	23.31	4.73	26.97	-0.27	ALM025404/cg7	SO2	43.6		0
scg7	6/4/2010	15:52:15	4.16	4.31	23.40	4.61	27.02	-0.27	ALM025404/cg7	SO2	43.6		0
scg7	6/4/2010	15:52:30	4.22	4.31	23.50	4.75	27.01	-0.21	ALM025404/cg7	SO2	43.6		0
scg7	6/4/2010	15:52:45	3.15	3.19	22.98	6.92	24.71	-0.20	ALM025404/cg7	SO2	43.6		0
scg7	6/4/2010	15:53:00	0.78	0.67	20.00	8.40	27.65	-0.23	ALM025404/cg7	SO2	43.6		0
scg7	6/4/2010	15:53:15	0.18	0.07	8.33	4.75	35.33	23.36	ALM025404/cg7	SO2	43.6		0
scg7	6/4/2010	15:53:30	0.12	0.01	1.22	1.50	38.72	14.23	ALM025404/cg7	SO2	43.6		0
scg7	6/4/2010	15:53:45	0.10	0.00	0.54	0.37	40.16	0.05	ALM025404/cg7	SO2	43.6		0
scg7	6/4/2010	15:54:00	0.11	-0.01	0.40	0.21	40.90	-0.08	ALM025404/cg7	SO2	43.6		0
scg7	6/4/2010	15:54:15	0.11	-0.01	0.32	0.18	41.35	-0.14	ALM025404/cg7	SO2	43.6		0
scg7	6/4/2010	15:54:30	0.09	-0.01	0.29	0.19	41.56	-0.17	ALM025404/cg7	SO2	43.6		0
scg7	6/4/2010	15:54:45	0.09	-0.01	0.27	0.18	41.69	-0.20	ALM025404/cg7	SO2	43.6		0
scg7	6/4/2010	15:55:00	0.10	-0.02	0.27	0.18	41.79	-0.20	ALM025404/cg7	SO2	43.6		0
o2zero1	6/4/2010	15:55:00	0.10	-0.02	0.27	0.18	41.79	-0.20	ALM025404/cg7	SO2	43.6		0
co2zero1	6/4/2010	15:55:00	0.10	-0.02	0.27	0.18	41.79	-0.20	ALM025404/cg7	SO2	43.6		0
noxzero1	6/4/2010	15:55:00	0.10	-0.02	0.27	0.18	41.79	-0.20	ALM025404/cg7	SO2	43.6		0
cozero1	6/4/2010	15:55:00	0.10	-0.02	0.27	0.18	41.79	-0.20	ALM025404/cg7	SO2	43.6		0
so2span1	6/4/2010	15:55:00	0.10	-0.02	0.27	0.18	41.79	-0.20	ALM025404/cg7	SO2	43.6		0
scg11	6/4/2010	15:55:15	0.09	-0.02	0.26	0.18	41.88	-0.20	ALM057740/cg11	O2	20.9		0
scg11	6/4/2010	15:55:30	0.09	-0.01	0.24	0.18	41.94	-0.20	ALM057740/cg11	O2	20.9		0
scg11	6/4/2010	15:55:45	0.13	-0.01	0.24	0.17	42.06	-0.21	ALM057740/cg11	O2	20.9		0
scg11	6/4/2010	15:56:00	1.39	1.08	0.24	0.48	41.10	-0.23	ALM057740/cg11	O2	20.9		0
scg11	6/4/2010	15:56:15	3.51	3.63	7.70	1.92	36.43	-0.16	ALM057740/cg11	O2	20.9		0
scg11	6/4/2010	15:56:30	3.87	4.25	15.83	2.79	32.77	-0.02	ALM057740/cg11	O2	20.9		0
scg11	6/4/2010	15:56:45	3.91	4.30	22.34	2.75	30.71	-0.02	ALM057740/cg11	O2	20.9		0
thczero1	6/4/2010	15:56:45	3.91	4.30	22.34	2.75	30.71	-0.02	ALM057740/cg11	O2	20.9		0
scg9	6/4/2010	15:57:15	4.09	4.23	22.90	3.71	28.96	-0.02	ALM05391/cg9	O2	11.8	CO2	12.1
scg9	6/4/2010	15:57:30	4.23	4.17	22.88	4.98	28.52	-0.03	ALM05391/cg9	O2	11.8	CO2	12.1
scg9	6/4/2010	15:57:45	4.50	3.88	22.59	6.38	28.27	-0.02	ALM05391/cg9	O2	11.8	CO2	12.1
scg9	6/4/2010	15:58:00	8.65	7.25	21.33	5.22	21.09	-0.03	ALM05391/cg9	O2	11.8	CO2	12.1
scg9	6/4/2010	15:58:15	11.25	11.36	9.33	2.46	10.85	0.00	ALM05391/cg9	O2	11.8	CO2	12.1
scg9	6/4/2010	15:58:30	11.52	11.86	1.48	0.88	6.20	0.02	ALM05391/cg9	O2	11.8	CO2	12.1
scg9	6/4/2010	15:58:45	11.56	11.91	0.39	0.37	4.20	0.04	ALM05391/cg9	O2	11.8	CO2	12.1
scg9	6/4/2010	15:59:00	11.55	11.92	0.26	0.28	3.19	0.22	ALM05391/cg9	O2	11.8	CO2	12.1
scg9	6/4/2010	15:59:15	11.56	11.92	0.23	0.25	2.60	39.04	ALM05391/cg9	O2	11.8	CO2	12.1
scg9	6/4/2010	15:59:30	11.55	11.92	0.20	0.25	2.21	44.65	ALM05391/cg9	O2	11.8	CO2	12.1
scg9	6/4/2010	15:59:45	11.56	11.92	0.19	0.31	1.98	44.92	ALM05391/cg9	O2	11.8	CO2	12.1
scg9	6/4/2010	16:00:00	11.58	11.93	0.17	0.29	1.81	45.08	ALM05391/cg9	O2	11.8	CO2	12.1
scg9	6/4/2010	16:00:15	11.57	11.94	0.17	0.26	1.69	45.18	ALM05391/cg9	O2	11.8	CO2	12.1
scg9	6/4/2010	16:00:30	11.56	11.94	0.17	0.29	1.59	45.30	ALM05391/cg9	O2	11.8	CO2	12.1

3.68 4.00 22.52 13.46 30.00 <0.01 Avgs.

name			1 O2	2 CO2	3 NOx	4 CO	5 SO2	6 THC
scg9	6/4/2010	16:00:45	11.56	11.94	0.17	0.26	1.54	45.38
so2zero1	6/4/2010	16:00:45	11.56	11.94	0.17	0.26	1.54	45.38
o2span1	6/4/2010	16:00:45	11.56	11.94	0.17	0.26	1.54	45.38
co2span1	6/4/2010	16:00:45	11.56	11.94	0.17	0.26	1.54	45.38
scg13	6/4/2010	16:01:00	11.57	11.94	0.16	0.29	1.48	45.43
scg13	6/4/2010	16:01:15	11.53	11.93	0.15	0.29	1.42	45.51
scg13	6/4/2010	16:01:30	11.41	11.90	0.15	0.29	1.38	45.56
scg13	6/4/2010	16:01:45	8.69	9.67	0.68	0.80	3.19	45.61
scg13	6/4/2010	16:02:00	4.50	5.33	3.34	2.41	11.22	45.69
scg13	6/4/2010	16:02:15	3.64	4.26	14.82	4.48	19.22	45.74
thcspan1	6/4/2010	16:02:15	3.64	4.26	14.82	4.48	19.22	45.74
scg2	6/4/2010	16:02:30	3.55	4.14	21.92	6.32	24.04	45.79
scg2	6/4/2010	16:02:45	3.55	4.10	22.67	7.08	26.61	45.83
scg2	6/4/2010	16:03:00	4.03	4.44	22.78	6.86	27.14	45.62
scg2	6/4/2010	16:03:15	3.69	4.19	22.20	4.70	17.48	45.65
scg2	6/4/2010	16:03:30	0.81	0.97	26.74	2.21	8.79	45.67
scg2	6/4/2010	16:03:45	0.22	0.16	37.55	0.64	5.06	20.94
scg2	6/4/2010	16:04:00	0.14	0.06	41.82	0.22	3.42	0.58
scg2	6/4/2010	16:04:15	0.13	0.03	43.14	0.18	2.58	0.27
scg2	6/4/2010	16:04:30	0.12	0.02	43.30	0.20	2.09	0.22
scg2	6/4/2010	16:04:45	0.09	0.02	43.35	0.20	1.79	0.17
scg2	6/4/2010	16:05:00	0.08	0.02	43.40	0.20	1.62	0.09
noxspan1	6/4/2010	16:05:00	0.08	0.02	43.40	0.20	1.62	0.09
scg5	6/4/2010	16:05:15	0.09	0.02	43.45	0.20	1.53	0.19
scg5	6/4/2010	16:05:30	0.09	0.01	43.45	0.22	1.43	0.11
scg5	6/4/2010	16:05:45	0.09	0.02	43.41	0.22	1.34	0.07
scg5	6/4/2010	16:06:00	0.09	0.03	43.41	3.63	1.32	0.04
scg5	6/4/2010	16:06:15	0.10	0.03	29.74	20.00	1.29	0.04
scg5	6/4/2010	16:06:30	0.11	0.03	15.01	35.08	1.27	0.09
scg5	6/4/2010	16:06:45	0.10	0.03	1.97	41.40	1.23	0.04
scg5	6/4/2010	16:07:00	0.11	0.03	0.80	42.40	1.19	0.09
scg5	6/4/2010	16:07:15	0.12	0.03	0.49	42.63	1.20	0.15
scg5	6/4/2010	16:07:30	0.09	0.03	0.40	42.66	1.17	-0.01
scg5	6/4/2010	16:07:45	0.08	0.03	0.37	42.65	1.19	-0.03
scg5	6/4/2010	16:08:00	0.09	0.03	0.34	42.64	1.20	-0.04
cospan1	6/4/2010	16:08:00	0.09	0.03	0.34	42.64	1.20	-0.04
run3	6/4/2010	16:29:00	3.67	4.03	22.43	14.03	29.79	0.01
run3	6/4/2010	16:29:15	3.66	4.02	22.38	14.40	29.78	0.00
run3	6/4/2010	16:29:30	3.62	4.02	22.37	14.34	29.82	0.01
run3	6/4/2010	16:29:45	3.61	4.03	22.38	14.02	29.91	0.00
run3	6/4/2010	16:30:00	3.60	4.03	22.42	13.98	29.97	0.00
run3	6/4/2010	16:30:15	3.58	4.02	22.32	14.31	30.04	0.02
run3	6/4/2010	16:30:30	3.58	4.03	22.23	14.14	30.10	0.01
run3	6/4/2010	16:30:45	3.57	4.04	22.20	13.76	30.16	0.02
run3	6/4/2010	16:31:00	3.56	4.04	22.22	14.33	30.19	0.02
run3	6/4/2010	16:31:15	3.53	4.06	22.11	14.37	30.24	0.01
run3	6/4/2010	16:31:30	3.50	4.07	22.12	14.08	30.36	0.00
run3	6/4/2010	16:31:45	3.48	4.06	22.24	14.80	30.47	0.01
run3	6/4/2010	16:32:00	3.51	4.06	22.25	15.47	30.55	0.00
run3	6/4/2010	16:32:15	3.52	4.04	22.10	16.37	30.56	0.04
run3	6/4/2010	16:32:30	3.53	4.05	21.98	16.82	30.59	0.06
run3	6/4/2010	16:32:45	3.50	4.06	22.01	15.37	30.56	0.02
run3	6/4/2010	16:33:00	3.46	4.06	22.22	13.33	30.60	0.01
run3	6/4/2010	16:33:15	3.51	4.04	22.35	12.87	30.60	0.02
run3	6/4/2010	16:33:30	3.54	4.03	22.29	13.92	30.57	0.01
run3	6/4/2010	16:33:45	3.53	4.04	22.16	15.07	30.49	0.03
run3	6/4/2010	16:34:00	3.53	4.05	22.23	15.28	30.41	0.01
run3	6/4/2010	16:34:15	3.53	4.06	22.27	14.72	30.32	0.01
run3	6/4/2010	16:34:30	3.51	4.06	22.30	13.63	30.28	0.00
run3	6/4/2010	16:34:45	3.50	4.06	22.33	12.76	30.27	0.00
run3	6/4/2010	16:35:00	3.51	4.06	22.35	12.59	30.38	0.00
run3	6/4/2010	16:35:15	3.57	4.03	22.27	13.27	30.49	0.01
run3	6/4/2010	16:35:30	3.57	4.02	22.17	14.22	30.54	0.00
run3	6/4/2010	16:35:45	3.59	4.02	22.01	14.91	30.46	0.02
run3	6/4/2010	16:36:00	3.56	4.03	22.02	14.95	30.37	0.00
run3	6/4/2010	16:36:15	3.55	4.03	22.05	14.94	30.34	0.02
run3	6/4/2010	16:36:30	3.54	4.03	22.08	14.74	30.36	0.02
run3	6/4/2010	16:36:45	3.51	4.04	22.18	13.57	30.33	0.01
run3	6/4/2010	16:37:00	3.47	4.05	22.41	12.49	30.32	0.00
run3	6/4/2010	16:37:15	3.49	4.05	22.48	12.47	30.35	0.00
run3	6/4/2010	16:37:30	3.49	4.03	22.38	13.79	30.42	0.02
run3	6/4/2010	16:37:45	3.48	4.04	22.16	14.11	30.48	0.04
run3	6/4/2010	16:38:00	3.46	4.06	22.29	12.87	30.59	0.01
run3	6/4/2010	16:38:15	3.47	4.06	22.37	12.23	30.66	0.01
run3	6/4/2010	16:38:30	3.46	4.05	22.26	12.59	30.69	0.02
run3	6/4/2010	16:38:45	3.47	4.03	22.00	13.08	30.67	0.01
run3	6/4/2010	16:39:00	3.49	4.01	21.95	14.29	30.64	0.02
run3	6/4/2010	16:39:15	3.46	4.02	21.83	15.27	30.58	0.06
run3	6/4/2010	16:39:30	3.42	4.03	21.79	15.22	30.58	0.03
run3	6/4/2010	16:39:45	3.42	4.04	21.88	15.04	30.61	0.05
run3	6/4/2010	16:40:00	3.40	4.04	21.94	14.50	30.74	0.05
run3	6/4/2010	16:40:15	3.37	4.04	21.97	13.64	30.89	0.03
run3	6/4/2010	16:40:30	3.38	4.04	21.93	14.41	31.11	0.06
run3	6/4/2010	16:40:45	3.40	4.04	21.88	14.70	31.18	0.06
run3	6/4/2010	16:41:00	3.40	4.05	22.01	14.23	31.12	-0.02
run3	6/4/2010	16:41:15	3.40	4.06	22.07	13.43	30.98	-0.19
run3	6/4/2010	16:41:30	3.42	4.07	22.05	13.10	30.89	-0.19
run3	6/4/2010	16:41:45	3.41	4.08	22.05	12.83	30.88	-0.19
run3	6/4/2010	16:42:00	3.43	4.06	22.27	12.95	30.88	-0.17
run3	6/4/2010	16:42:15	3.42	4.06	22.16	13.22	30.90	-0.17
run3	6/4/2010	16:42:30	3.43	4.06	22.04	13.19	30.93	-0.16
run3	6/4/2010	16:42:45	3.44	4.06	22.03	13.18	30.78	-0.18
run3	6/4/2010	16:43:00	3.44	4.05	22.03	13.73	30.67	-0.16
run3	6/4/2010	16:43:15	3.43	4.06	22.03	13.84	30.65	-0.15
run3	6/4/2010	16:43:30	3.40	4.06	22.07	13.16	30.77	-0.15
run3	6/4/2010	16:43:45	3.39	4.05	22.14	12.43	30.86	-0.17
run3	6/4/2010	16:44:00	3.37	4.04	22.11	11.94	30.81	-0.18
run3	6/4/2010	16:44:15	3.38	4.04	22.17	11.83	30.74	-0.03
run3	6/4/2010	16:44:30	3.40	4.02	22.18	12.03	30.82	0.00
run3	6/4/2010	16:44:45	3.42	4.01	22.06	12.67	30.94	-0.01

ALM05391/cg9	O2	11.8 CO2	12.1
ALM05391/cg9	O2	11.8 CO2	12.1
ALM05391/cg9	O2	11.8 CO2	12.1
ALM05391/cg9	O2	11.8 CO2	12.1
2L1152/cg13	THC	46.4	0
2L1152/cg13	THC	46.4	0
2L1152/cg13	THC	46.4	0
2L1152/cg13	THC	46.4	0
2L1152/cg13	THC	46.4	0
2L1152/cg13	THC	46.4	0
2L1152/cg13	THC	46.4	0
BLM001094/cg2	NOx	45.3	0
BLM001094/cg2	NOx	45.3	0
BLM001094/cg2	NOx	45.3	0
BLM001094/cg2	NOx	45.3	0
BLM001094/cg2	NOx	45.3	0
BLM001094/cg2	NOx	45.3	0
BLM001094/cg2	NOx	45.3	0
BLM001094/cg2	NOx	45.3	0
BLM001094/cg2	NOx	45.3	0
BLM001094/cg2	NOx	45.3	0
BLM001094/cg2	NOx	45.3	0
BLM001094/cg2	NOx	45.3	0
BLM001094/cg2	NOx	45.3	0
BLM001094/cg2	NOx	45.3	0
ALM051832/cg5	CO	42.9	0
ALM051832/cg5	CO	42.9	0
ALM051832/cg5	CO	42.9	0
ALM051832/cg5	CO	42.9	0
ALM051832/cg5	CO	42.9	0
ALM051832/cg5	CO	42.9	0
ALM051832/cg5	CO	42.9	0
ALM051832/cg5	CO	42.9	0
ALM051832/cg5	CO	42.9	0
ALM051832/cg5	CO	42.9	0
ALM051832/cg5	CO	42.9	0
ALM051832/cg5	CO	42.9	0
ALM051832/cg5	CO	42.9	0
ALM051832/cg5	CO	42.9	0
ALM051832/cg5	CO	42.9	0

name			1 O2	2 CO2	3 NOx	4 CO	5 SO2	6 THC
run3	6/4/2010	16:45:00	3.40	4.01	21.87	13.35	31.02	0.00
run3	6/4/2010	16:45:15	3.38	4.02	21.78	14.03	31.11	-0.01
run3	6/4/2010	16:45:30	3.38	4.02	21.80	13.94	31.11	0.00
run3	6/4/2010	16:45:45	3.42	4.02	21.84	13.60	31.13	-0.01
run3	6/4/2010	16:46:00	3.36	4.03	21.72	14.16	31.15	-0.01
run3	6/4/2010	16:46:15	3.37	4.04	21.79	15.02	31.17	0.04
run3	6/4/2010	16:46:30	3.38	4.04	21.95	14.41	31.10	-0.01
run3	6/4/2010	16:46:45	3.36	4.05	22.10	13.95	31.12	0.00
run3	6/4/2010	16:47:00	3.39	4.06	22.14	14.00	31.19	0.00
run3	6/4/2010	16:47:15	3.42	4.07	22.21	13.84	31.15	0.00
run3	6/4/2010	16:47:30	3.40	4.09	22.32	13.65	31.12	0.02
run3	6/4/2010	16:47:45	3.43	4.10	22.48	12.89	31.11	-0.01
run3	6/4/2010	16:48:00	3.46	4.09	22.49	12.35	31.01	-0.01
run3	6/4/2010	16:48:15	3.50	4.08	22.44	12.95	30.92	-0.01
run3	6/4/2010	16:48:30	3.53	4.08	22.42	13.89	30.84	0.03
run3	6/4/2010	16:48:45	3.53	4.07	22.44	13.97	30.81	0.02
run3	6/4/2010	16:49:00	3.53	4.08	22.51	14.16	30.69	0.01
run3	6/4/2010	16:49:15	3.51	4.10	22.57	13.77	30.67	0.03
run3	6/4/2010	16:49:30	3.54	4.10	22.61	13.03	30.68	0.00
run3	6/4/2010	16:49:45	3.56	4.08	22.63	13.56	30.59	0.01
run3	6/4/2010	16:50:00	3.55	4.09	22.43	14.34	30.39	0.02
run3	6/4/2010	16:50:15	3.51	4.09	22.50	13.82	30.30	0.00
run3	6/4/2010	16:50:30	3.51	4.08	22.67	13.03	30.22	0.01
run3	6/4/2010	16:50:45	3.51	4.07	22.81	12.04	30.21	-0.01
run3	6/4/2010	16:51:00	3.52	4.06	22.80	11.72	30.30	0.00
run3	6/4/2010	16:51:15	3.52	4.06	22.76	11.57	30.42	-0.01
run3	6/4/2010	16:51:30	3.52	4.05	22.70	11.95	30.47	0.00
run3	6/4/2010	16:51:45	3.54	4.04	22.64	13.30	30.43	0.04
run3	6/4/2010	16:52:00	3.57	4.03	22.50	14.15	30.36	0.01
run3	6/4/2010	16:52:15	3.55	4.02	22.38	14.43	30.25	0.03
run3	6/4/2010	16:52:30	3.54	4.03	22.34	13.51	30.22	0.00
run3	6/4/2010	16:52:45	3.52	4.03	22.38	12.45	30.24	-0.01
run3	6/4/2010	16:53:00	3.53	4.03	22.44	12.69	30.31	0.00
run3	6/4/2010	16:53:15	3.51	4.03	22.38	12.90	30.26	-0.01
run3	6/4/2010	16:53:30	3.49	4.04	22.36	12.71	30.26	0.00
run3	6/4/2010	16:53:45	3.49	4.04	22.39	12.47	30.33	0.10
run3	6/4/2010	16:54:00	3.48	4.02	22.41	13.10	30.49	0.02
run3	6/4/2010	16:54:15	3.48	4.02	22.33	13.82	30.61	-0.02
run3	6/4/2010	16:54:30	3.47	4.03	22.30	13.34	30.68	-0.05
run3	6/4/2010	16:54:45	3.45	4.04	22.37	12.78	30.73	-0.05
run3	6/4/2010	16:55:00	3.44	4.04	22.35	12.58	30.83	-0.06
run3	6/4/2010	16:55:15	3.41	4.04	22.34	13.63	30.85	-0.04
run3	6/4/2010	16:55:30	3.44	4.04	22.33	13.64	30.76	-0.05
run3	6/4/2010	16:55:45	3.43	4.04	22.38	12.85	30.72	-0.05
run3	6/4/2010	16:56:00	3.43	4.04	22.46	12.69	30.74	-0.03
run3	6/4/2010	16:56:15	3.43	4.03	22.41	12.12	30.80	-0.04
run3	6/4/2010	16:56:30	3.44	4.03	22.39	11.96	30.82	-0.04
run3	6/4/2010	16:56:45	3.42	4.04	22.36	12.64	30.90	-0.02
run3	6/4/2010	16:57:00	3.43	4.04	22.33	12.59	31.05	-0.02
run3	6/4/2010	16:57:15	3.47	4.02	22.35	12.56	31.16	-0.07
run3	6/4/2010	16:57:30	3.45	4.02	22.26	12.97	31.12	-0.07
run3	6/4/2010	16:57:45	3.41	4.02	22.04	12.53	30.97	-0.07
run3	6/4/2010	16:58:00	3.39	4.01	22.16	12.87	30.89	-0.06
run3	6/4/2010	16:58:15	3.38	4.00	22.18	13.21	30.83	-0.09
run3	6/4/2010	16:58:30	3.35	4.00	22.16	12.74	30.82	-0.09
run3	6/4/2010	16:58:45	3.33	4.02	22.17	11.59	30.77	-0.11
run3	6/4/2010	16:59:00	3.32	4.03	22.35	10.81	30.70	-0.10
run3	6/4/2010	16:59:15	3.34	4.02	22.30	10.67	30.72	-0.11
run3	6/4/2010	16:59:30	3.31	4.01	22.19	11.00	30.86	-0.11
run3	6/4/2010	16:59:45	3.32	4.00	22.05	11.98	31.00	-0.08
run3	6/4/2010	17:00:00	3.32	4.00	21.94	12.45	31.09	-0.10
run3	6/4/2010	17:00:15	3.28	4.00	21.94	12.59	31.25	-0.09
run3	6/4/2010	17:00:30	3.25	4.02	21.92	12.53	31.40	-0.09
run3	6/4/2010	17:00:45	3.24	4.03	21.92	11.78	31.54	-0.10
run3	6/4/2010	17:01:00	3.24	4.03	22.02	11.33	31.63	-0.08
run3	6/4/2010	17:01:15	3.21	4.04	22.14	10.89	31.74	-0.09
run3	6/4/2010	17:01:30	3.25	4.01	22.11	10.83	31.86	-0.11
run3	6/4/2010	17:01:45	3.27	3.97	21.91	11.94	31.87	-0.11
run3	6/4/2010	17:02:00	3.28	3.97	21.75	13.29	31.81	-0.07
run3	6/4/2010	17:02:15	3.25	3.97	21.74	13.13	31.74	-0.05
run3	6/4/2010	17:02:30	3.21	3.99	21.76	12.66	31.76	-0.08
run3	6/4/2010	17:02:45	3.20	4.01	21.76	12.19	31.85	-0.02
run3	6/4/2010	17:03:00	3.20	4.02	21.85	12.30	31.90	-0.03
run3	6/4/2010	17:03:15	3.22	4.01	21.79	12.95	31.92	-0.01
run3	6/4/2010	17:03:30	3.21	4.02	21.74	12.82	31.88	-0.07
run3	6/4/2010	17:03:45	3.20	4.02	21.73	12.22	31.85	-0.07
run3	6/4/2010	17:04:00	3.20	4.03	21.71	12.04	31.86	-0.05
run3	6/4/2010	17:04:15	3.18	4.05	21.82	12.02	31.94	-0.07
run3	6/4/2010	17:04:30	3.13	4.05	21.94	12.11	31.96	-0.01
run3	6/4/2010	17:04:45	3.15	4.05	22.04	11.99	31.96	-0.08
run3	6/4/2010	17:05:00	3.21	4.02	22.13	12.45	31.98	-0.08
run3	6/4/2010	17:05:15	3.24	3.99	22.01	13.37	32.01	-0.05
run3	6/4/2010	17:05:30	3.24	4.01	21.94	13.13	32.02	-0.05
run3	6/4/2010	17:05:45	3.25	4.02	21.93	12.13	32.01	-0.07
run3	6/4/2010	17:06:00	3.24	4.03	21.94	11.63	31.97	-0.05
run3	6/4/2010	17:06:15	3.28	4.03	21.97	11.25	31.82	-0.08
run3	6/4/2010	17:06:30	3.31	4.02	21.93	11.84	31.61	-0.08
run3	6/4/2010	17:06:45	3.32	4.02	21.83	13.13	31.55	-0.06
run3	6/4/2010	17:07:00	3.29	4.03	21.80	13.00	31.54	-0.06
run3	6/4/2010	17:07:15	3.30	4.04	21.82	11.84	31.59	-0.07
run3	6/4/2010	17:07:30	3.31	4.02	21.78	11.73	31.64	-0.08
run3	6/4/2010	17:07:45	3.30	4.00	21.74	12.34	31.64	-0.06
run3	6/4/2010	17:08:00	3.32	3.99	21.66	13.39	31.64	-0.04
run3	6/4/2010	17:08:15	3.34	3.97	21.55	14.32	31.72	-0.03
run3	6/4/2010	17:08:30	3.34	3.97	21.48	14.96	31.82	-0.06
run3	6/4/2010	17:08:45	3.33	3.98	21.47	14.28	31.75	-0.06
run3	6/4/2010	17:09:00	3.30	3.98	21.54	13.31	31.63	-0.07
run3	6/4/2010	17:09:15	3.30	3.99	21.60	12.55	31.61	-0.04
run3	6/4/2010	17:09:30	3.30	4.00	21.71	12.37	31.56	-0.03
run3	6/4/2010	17:09:45	3.32	4.00	21.81	12.46	31.37	-0.06

name			1 O2	2 CO2	3 NOx	4 CO	5 SO2	6 THC
run3	6/4/2010	17:10:00	3.39	3.99	21.79	12.69	31.22	-0.10
run3	6/4/2010	17:10:15	3.41	4.00	21.62	13.38	31.22	-0.06
run3	6/4/2010	17:10:30	3.43	4.00	21.45	14.85	31.31	-0.01
run3	6/4/2010	17:10:45	3.45	4.00	21.34	16.22	31.46	0.07
run3	6/4/2010	17:11:00	3.44	4.01	21.38	16.31	31.56	0.07
run3	6/4/2010	17:11:15	3.41	4.03	21.42	16.24	31.60	0.04
run3	6/4/2010	17:11:30	3.41	4.05	21.46	15.98	31.61	0.09
run3	6/4/2010	17:11:45	3.45	4.06	21.52	15.43	31.60	0.05
run3	6/4/2010	17:12:00	3.45	4.07	21.58	15.38	31.57	0.12
run3	6/4/2010	17:12:15	3.47	4.08	21.81	15.24	31.53	-0.07
run3	6/4/2010	17:12:30	3.52	4.07	21.92	15.13	31.50	-0.10
run3	6/4/2010	17:12:45	3.54	4.07	21.87	15.33	31.35	-0.11
run3	6/4/2010	17:13:00	3.58	4.06	21.92	15.79	31.05	-0.07
run3	6/4/2010	17:13:15	3.60	4.09	21.87	16.15	30.77	-0.14
run3	6/4/2010	17:13:30	3.59	4.10	21.87	16.91	30.59	-0.06
run3	6/4/2010	17:13:45	3.58	4.12	22.02	17.83	30.57	-0.04
run3	6/4/2010	17:14:00	3.61	4.13	22.05	18.37	30.64	-0.06
run3	6/4/2010	17:14:15	3.60	4.14	22.17	16.76	30.72	-0.08
run3	6/4/2010	17:14:30	3.61	4.13	22.27	15.70	30.68	-0.11
run3	6/4/2010	17:14:45	3.65	4.12	22.28	15.47	30.60	-0.11
run3	6/4/2010	17:15:00	3.67	4.10	22.31	15.63	30.55	-0.12
run3	6/4/2010	17:15:15	3.72	4.10	22.16	15.50	30.56	-0.14
run3	6/4/2010	17:15:30	3.78	4.09	21.97	16.67	30.61	-0.15
run3	6/4/2010	17:15:45	3.82	4.07	21.87	17.93	30.58	-0.11
run3	6/4/2010	17:16:00	3.80	4.06	21.99	18.67	30.50	-0.07
run3	6/4/2010	17:16:15	3.79	4.07	21.86	19.30	30.46	-0.07
run3	6/4/2010	17:16:30	3.76	4.07	21.74	19.69	30.47	-0.11
run3	6/4/2010	17:16:45	3.78	4.07	21.77	19.48	30.48	-0.09
run3	6/4/2010	17:17:00	3.79	4.08	21.81	18.10	30.41	-0.11
run3	6/4/2010	17:17:15	3.79	4.08	22.05	16.89	30.32	-0.14
run3	6/4/2010	17:17:30	3.75	4.09	22.14	16.41	30.34	-0.12
run3	6/4/2010	17:17:45	3.74	4.09	22.00	16.35	30.39	-0.11
run3	6/4/2010	17:18:00	3.80	4.10	22.14	17.02	30.47	-0.02
run3	6/4/2010	17:18:15	3.82	4.08	22.20	16.98	30.48	-0.09
run3	6/4/2010	17:18:30	3.83	4.07	22.17	17.26	30.43	-0.11
run3	6/4/2010	17:18:45	3.86	4.05	22.07	19.04	30.41	-0.06
run3	6/4/2010	17:19:00	3.85	4.05	21.66	20.34	30.36	-0.08
run3	6/4/2010	17:19:15	3.87	4.06	21.74	19.84	30.40	-0.07
run3	6/4/2010	17:19:30	3.85	4.06	21.89	18.46	30.49	-0.09
run3	6/4/2010	17:19:45	3.82	4.07	22.00	17.92	30.46	-0.08
run3	6/4/2010	17:20:00	3.82	4.08	22.00	17.90	30.39	-0.04
run3	6/4/2010	17:20:15	3.83	4.08	22.19	16.44	30.35	-0.09
run3	6/4/2010	17:20:30	3.81	4.09	22.31	15.36	30.29	-0.12
run3	6/4/2010	17:20:45	3.81	4.09	22.29	15.75	30.25	-0.12
run3	6/4/2010	17:21:00	3.80	4.12	22.22	16.34	30.23	-0.08
run3	6/4/2010	17:21:15	3.80	4.12	22.29	16.40	30.27	-0.07
run3	6/4/2010	17:21:30	3.80	4.11	22.37	16.29	30.20	-0.09
run3	6/4/2010	17:21:45	3.78	4.13	22.47	15.80	29.99	-0.10
run3	6/4/2010	17:22:00	3.78	4.13	22.61	15.48	29.88	-0.04
run3	6/4/2010	17:22:15	3.82	4.12	22.46	15.16	29.91	-0.09
run3	6/4/2010	17:22:30	3.77	4.12	22.42	14.64	29.98	-0.08
run3	6/4/2010	17:22:45	3.78	4.12	22.52	14.82	30.15	-0.06
run3	6/4/2010	17:23:00	3.77	4.13	22.44	15.02	30.25	-0.05
run3	6/4/2010	17:23:15	3.78	4.13	22.45	14.03	30.39	-0.12
run3	6/4/2010	17:23:30	3.79	4.12	22.55	13.28	30.39	-0.12
run3	6/4/2010	17:23:45	3.80	4.11	22.74	13.52	30.34	-0.12
run3	6/4/2010	17:24:00	3.84	4.10	22.72	14.22	30.18	-0.08
run3	6/4/2010	17:24:15	3.84	4.09	22.43	15.71	30.05	-0.02
run3	6/4/2010	17:24:30	3.84	4.09	22.26	16.93	30.06	-0.06
run3	6/4/2010	17:24:45	3.85	4.09	22.20	16.96	30.16	-0.06
run3	6/4/2010	17:25:00	3.80	4.11	22.12	16.41	30.23	-0.04
run3	6/4/2010	17:25:15	3.80	4.12	22.21	16.62	30.33	-0.07
run3	6/4/2010	17:25:30	3.78	4.13	22.30	16.98	30.29	-0.04
run3	6/4/2010	17:25:45	3.77	4.15	22.37	15.73	30.07	-0.05
run3	6/4/2010	17:26:00	3.79	4.15	22.55	14.51	29.96	-0.08
run3	6/4/2010	17:26:15	3.81	4.13	22.66	14.87	29.97	0.02
run3	6/4/2010	17:26:30	3.79	4.13	22.67	15.96	30.04	0.00
run3	6/4/2010	17:26:45	3.79	4.14	22.63	15.74	30.15	-0.02
run3	6/4/2010	17:27:00	3.79	4.14	22.72	14.52	30.29	-0.07
run3	6/4/2010	17:27:15	3.78	4.15	22.75	14.07	30.29	-0.07
run3	6/4/2010	17:27:30	3.81	4.14	22.72	14.36	30.22	-0.08
run3	6/4/2010	17:27:45	3.82	4.14	22.72	14.48	30.18	-0.04
run3	6/4/2010	17:28:00	3.86	4.13	22.80	14.93	30.23	-0.04
run3	6/4/2010	17:28:15	3.85	4.11	22.67	15.96	30.32	-0.05
run3	6/4/2010	17:28:30	3.82	4.10	22.50	16.86	30.32	-0.01
run3	6/4/2010	17:28:45	3.81	4.10	22.38	16.26	30.24	-0.06
run3	6/4/2010	17:29:00	3.82	4.09	22.53	14.98	30.19	-0.04
run3	6/4/2010	17:29:15	3.82	4.09	22.57	14.24	30.17	-0.11
run3	6/4/2010	17:29:30	3.84	4.10	22.51	14.84	30.12	-0.09
run3	6/4/2010	17:29:45	3.86	4.10	22.38	15.81	30.15	-0.06
run3	6/4/2010	17:30:00	3.82	4.12	22.43	15.96	30.25	-0.04
run3	6/4/2010	17:30:15	3.78	4.14	22.43	16.51	30.36	-0.04
run3	6/4/2010	17:30:30	3.78	4.16	22.48	16.32	30.42	0.01
run3	6/4/2010	17:30:45	3.77	4.15	22.60	14.93	30.35	-0.08
run3	6/4/2010	17:31:00	3.79	4.14	22.61	13.83	30.20	-0.08
run3	6/4/2010	17:31:15	3.79	4.12	22.57	14.22	30.15	-0.08
run3	6/4/2010	17:31:30	3.80	4.12	22.49	15.37	30.15	-0.02
run3	6/4/2010	17:31:45	3.76	4.14	22.41	15.32	30.14	-0.06
run3	6/4/2010	17:32:00	3.73	4.15	22.49	14.38	30.16	-0.07
run3	6/4/2010	17:32:15	3.71	4.14	22.53	14.05	30.26	-0.09
run3	6/4/2010	17:32:30	3.68	4.12	22.45	14.16	30.32	-0.04
run3	6/4/2010	17:32:45	3.67	4.11	22.28	13.44	30.33	-0.08
run3	6/4/2010	17:33:00	3.67	4.12	22.39	12.48	30.35	-0.04
run3	6/4/2010	17:33:15	3.66	4.11	22.47	12.01	30.34	-0.04
run3	6/4/2010	17:33:30	3.67	4.10	22.46	12.07	30.28	-0.05
run3	6/4/2010	17:33:45	3.69	4.10	22.32	12.39	30.21	-0.05
run3	6/4/2010	17:34:00	3.69	4.07	22.14	13.45	30.26	-0.05
run3	6/4/2010	17:34:15	3.64	4.06	21.84	15.72	30.53	-0.01
run3	6/4/2010	17:34:30	3.58	4.09	21.74	16.29	30.76	0.00
run3	6/4/2010	17:34:45	3.53	4.09	21.89	14.06	30.86	-0.04

name			1 O2	2 CO2	3 NOx	4 CO	5 SO2	6 THC				
run3	6/4/2010	17:35:00	3.49	4.09	22.00	12.25	30.86	-0.03				
run3	6/4/2010	17:35:15	3.49	4.08	22.04	11.64	30.86	-0.01				
run3	6/4/2010	17:35:30	3.48	4.07	21.98	11.92	30.97	0.01				
run3	6/4/2010	17:35:45	3.45	4.07	21.79	12.34	31.11	-0.01				
run3	6/4/2010	17:36:00	3.45	4.05	21.70	12.78	31.27	0.04				
run3	6/4/2010	17:36:15	3.45	4.06	21.63	13.18	31.33	0.03				
run3	6/4/2010	17:36:30	3.42	4.05	21.60	13.24	31.32	-0.01				
run3	6/4/2010	17:36:45	3.44	4.04	21.55	13.68	31.36	-0.01				
run3	6/4/2010	17:37:00	3.43	4.04	21.32	14.08	31.31	-0.01				
run3	6/4/2010	17:37:15	3.41	4.06	21.36	13.72	31.31	0.00				
run3	6/4/2010	17:37:30	3.41	4.04	21.42	13.91	31.35	0.00				
run3	6/4/2010	17:37:45	3.42	4.04	21.37	15.29	31.36	-0.03				
run3	6/4/2010	17:38:00	3.41	4.04	21.24	16.24	31.40	0.02				
run3	6/4/2010	17:38:15	3.33	4.08	21.27	15.53	31.45	0.03				
run3	6/4/2010	17:38:30	3.34	4.10	21.50	13.38	31.49	-0.03				
run3	6/4/2010	17:38:45	3.35	4.10	21.81	11.81	31.38	-0.07				
run3	6/4/2010	17:39:00	3.33	4.10	21.85	11.46	30.95	-0.07				
run3	6/4/2010	17:39:15	3.34	4.10	21.83	11.56	30.25	-0.01				
run3	6/4/2010	17:39:30	3.38	4.08	21.86	11.87	29.86	-0.01				
run3	6/4/2010	17:39:45	3.36	4.08	21.91	12.34	30.13	0.02				
run3	6/4/2010	17:40:00	3.38	4.07	21.80	12.95	30.58	0.05				
run3	6/4/2010	17:40:15	3.41	4.06	21.65	13.68	30.95	0.07				
run3	6/4/2010	17:40:30	3.40	4.06	21.54	14.06	31.10	0.00				
run3	6/4/2010	17:40:45	3.37	4.07	21.50	13.99	31.03	0.03				
run3	6/4/2010	17:41:00	3.36	4.07	21.51	13.82	30.95	0.01				
run3	6/4/2010	17:41:15	3.37	4.06	21.58	13.15	30.93	0.01				
run3	6/4/2010	17:41:30	3.38	4.05	21.60	13.45	31.00	-0.18				
run3	6/4/2010	17:41:45	3.38	4.04	21.50	14.48	31.18	-0.25				
run3	6/4/2010	17:42:00	3.40	4.04	21.49	14.44	31.29	-0.19				
run3	6/4/2010	17:42:15	3.37	4.05	21.59	13.96	31.39	-0.14				
run3	6/4/2010	17:42:30	3.37	4.05	21.70	13.28	31.43	-0.15				
run3	6/4/2010	17:42:45	3.39	4.04	21.77	13.00	31.34	-0.14				
run3	6/4/2010	17:43:00	3.42	4.02	21.65	13.34	31.15	-0.04				
run3	6/4/2010	17:43:15	3.44	4.02	21.52	13.78	31.01	-0.09				
run3	6/4/2010	17:43:30	3.46	4.01	21.44	14.12	30.97	-0.05				
run3	6/4/2010	17:43:45	3.46	4.00	21.38	14.10	30.97	-0.08				
run3	6/4/2010	17:44:00	3.46	4.00	21.36	14.40	31.02	0.00				
run3	6/4/2010	17:44:15	3.47	3.99	21.32	15.37	30.98	-0.06				
run3	6/4/2010	17:44:30	3.48	3.98	21.31	15.90	30.88	-0.02				
run3	6/4/2010	17:44:45	3.45	4.01	21.29	14.93	30.87	-0.03				
run3	6/4/2010	17:45:00	3.44	4.03	21.47	13.65	30.81	-0.07				
run3	6/4/2010	17:45:15	3.45	4.02	21.53	13.45	30.76	-0.08				
run3	6/4/2010	17:45:30	3.50	4.02	21.49	14.22	30.83	-0.05				
run3	6/4/2010	17:45:45	3.54	4.01	21.43	15.18	30.87	-0.05				
run3	6/4/2010	17:46:00	3.53	4.02	21.42	15.46	30.91	-0.04				
run3	6/4/2010	17:46:15	3.50	4.03	21.48	14.86	30.86	-0.09				
run3	6/4/2010	17:46:30	3.54	4.02	21.51	14.23	30.78	-0.12				
run3	6/4/2010	17:46:45	3.52	4.01	21.58	13.27	30.66	-0.09				
run3	6/4/2010	17:47:00	3.54	4.00	21.63	12.96	30.59	-0.08				
run3	6/4/2010	17:47:15	3.54	4.00	21.52	13.66	30.56	-0.13				
run3	6/4/2010	17:47:30	3.54	4.00	21.42 22.07	14.42 4.11	30.56	-0.08				
run3	6/4/2010	17:47:45	3.51 2	4.01 6	21.35	14.99	30.50 8	-0.13				
averun5	6/4/2010	17:27:00	3.56	4.07	21.80	14.05	30.72	-0.05		21		
scg7	6/4/2010	17:48:00	3.52	4.02	21.46	15.58	30.45	-0.04	ALM025404/cg7	SO2	43.6	0
scg7	6/4/2010	17:48:15	3.51	4.04	21.59	15.18	30.45	-0.08	ALM025404/cg7	SO2	43.6	0
scg7	6/4/2010	17:48:30	3.48	4.02	21.63	14.16	30.18	-0.02	ALM025404/cg7	SO2	43.6	0
scg7	6/4/2010	17:48:45	2.19	2.52	20.38	15.30	26.22	-0.05	ALM025404/cg7	SO2	43.6	0
scg7	6/4/2010	17:49:00	0.45	0.43	14.76	12.43	30.32	15.50	ALM025404/cg7	SO2	43.6	0
scg7	6/4/2010	17:49:15	0.15	0.06	5.81	5.27	36.61	12.94	ALM025404/cg7	SO2	43.6	0
scg7	6/4/2010	17:49:30	0.11	0.02	1.01	1.40	39.14	2.00	ALM025404/cg7	SO2	43.6	0
scg7	6/4/2010	17:49:45	0.09	0.01	0.51	0.42	40.18	1.21	ALM025404/cg7	SO2	43.6	0
scg7	6/4/2010	17:50:00	0.08	0.00	0.40	0.25	40.76	0.83	ALM025404/cg7	SO2	43.6	0
scg7	6/4/2010	17:50:15	0.09	0.00	0.32	0.22	41.09	0.57	ALM025404/cg7	SO2	43.6	0
scg7	6/4/2010	17:50:30	0.10	0.00	0.29	0.22	41.26	0.39	ALM025404/cg7	SO2	43.6	0
scg7	6/4/2010	17:50:45	0.09	0.00	0.27	0.22	41.37	0.27	ALM025404/cg7	SO2	43.6	0
scg7	6/4/2010	17:51:00	0.10	0.00	0.27	0.19	41.42	0.20	ALM025404/cg7	SO2	43.6	0
o2zero1	6/4/2010	17:51:00	0.10	0.00	0.27	0.19	41.42	0.20	ALM025404/cg7	SO2	43.6	0
co2zero1	6/4/2010	17:51:00	0.10	0.00	0.27	0.19	41.42	0.20	ALM025404/cg7	SO2	43.6	0
noxzero1	6/4/2010	17:51:00	0.10	0.00	0.27	0.19	41.42	0.20	ALM025404/cg7	SO2	43.6	0
cozero1	6/4/2010	17:51:00	0.10	0.00	0.27	0.19	41.42	0.20	ALM025404/cg7	SO2	43.6	0
so2span1	6/4/2010	17:51:00	0.10	0.00	0.27	0.19	41.42	0.20	ALM025404/cg7	SO2	43.6	0
scg11	6/4/2010	17:51:15	0.10	0.00	0.26	0.21	41.44	0.13	ALM057740/cg11	O2	20.9	0
scg11	6/4/2010	17:51:30	0.09	0.00	0.24	0.19	41.49	0.07	ALM057740/cg11	O2	20.9	0
scg11	6/4/2010	17:51:45	0.14	0.02	0.24	0.27	41.53	0.02	ALM057740/cg11	O2	20.9	0
scg11	6/4/2010	17:52:00	1.55	1.39	0.24	2.23	40.30	-0.01	ALM057740/cg11	O2	20.9	0
scg11	6/4/2010	17:52:15	3.20	3.54	8.94	9.20	36.76	-0.02	ALM057740/cg11	O2	20.9	0
thczero1	6/4/2010	17:52:15	3.20	3.54	8.94	9.20	36.76	-0.02	ALM057740/cg11	O2	20.9	0
scg9	6/4/2010	17:52:30	3.45	3.89	16.38	14.44	34.19	-0.05	ALM05391/cg9	O2	11.8 CO2	12.1
scg9	6/4/2010	17:52:45	3.51	3.94	20.32	16.20	32.80	-0.08	ALM05391/cg9	O2	11.8 CO2	12.1
scg9	6/4/2010	17:53:00	3.34	3.79	20.80	15.67	32.12	-0.12	ALM05391/cg9	O2	11.8 CO2	12.1
scg9	6/4/2010	17:53:15	6.04	5.29	20.17	11.43	27.19	-0.15	ALM05391/cg9	O2	11.8 CO2	12.1
scg9	6/4/2010	17:53:30	10.70	10.67	14.22	5.43	13.90	-0.18	ALM05391/cg9	O2	11.8 CO2	12.1
scg9	6/4/2010	17:53:45	11.43	11.86	2.25	1.59	6.90	0.32	ALM05391/cg9	O2	11.8 CO2	12.1
scg9	6/4/2010	17:54:00	11.50	11.96	0.71	0.59	4.20	3.04	ALM05391/cg9	O2	11.8 CO2	12.1
scg9	6/4/2010	17:54:15	11.54	11.97	0.31	0.36	2.90	41.76	ALM05391/cg9	O2	11.8 CO2	12.1
scg9	6/4/2010	17:54:30	11.53	11.96	0.25	0.32	2.25	43.03	ALM05391/cg9	O2	11.8 CO2	12.1
scg9	6/4/2010	17:54:45	11.52	11.95	0.20	0.32	1.88	43.42	ALM05391/cg9	O2	11.8 CO2	12.1
scg9	6/4/2010	17:55:00	11.52	11.95	0.20	0.32	1.61	43.67	ALM05391/cg9	O2	11.8 CO2	12.1
scg9	6/4/2010	17:55:15	11.51	11.95	0.19	0.34	1.45	43.83	ALM05391/cg9	O2	11.8 CO2	12.1
scg9	6/4/2010	17:55:30	11.52	11.95	0.17	0.34	1.32	44.01	ALM05391/cg9	O2	11.8 CO2	12.1
scg9	6/4/2010	17:55:45	11.50	11.95	0.17	0.32	1.26	44.11	ALM05391/cg9	O2	11.8 CO2	12.1
so2zero1	6/4/2010	17:55:45	11.50	11.95	0.17	0.32	1.26	44.11	ALM05391/cg9	O2	11.8 CO2	12.1
o2span1	6/4/2010	17:55:45	11.50	11.95	0.17	0.32	1.26	44.11	ALM05391/cg9	O2	11.8 CO2	12.1
co2span1	6/4/2010	17:55:45	11.50	11.95	0.17	0.32	1.26	44.11	ALM05391/cg9	O2	11.8 CO2	12.1
scg13	6/4/2010	17:56:00	11.52	11.97	0.17	0.31	1.17	44.23	2L1152/cg13	THC	46.4	0
scg13	6/4/2010	17:56:15	11.48	11.96	0.17	0.30	1.10	44.35	2L1152/cg13	THC	46.4	0
scg13	6/4/2010	17:56:30	11.26	11.87	0.17	0.34	1.13	44.47	2L1152/cg13	THC	46.4	0
scg13	6/4/2010	17:56:45	7.98	8.97	1.21	2.50	4.71	44.57	2L1152/cg13	THC	46.4	0
scg13	6/4/2010	17:57:00	4.45	4.99	6.27	7.77	15.01	45.14	2L1152/cg13	THC	46.4	0
scg13	6/4/2010	17:57:15	3.83	4.22	15.53	13.26	22.59	45.83	2L1152/cg13	THC	46.4	0

name			1 O2	2 CO2	3 NOx	4 CO	5 SO2	6 THC				
scg13	6/4/2010	17:57:30	3.74	4.14	20.75	15.90	26.35	45.92	2L1152/cg13	THC	46.4	0
scg13	6/4/2010	17:57:45	3.75	4.12	21.50	16.43	28.11	46.03	2L1152/cg13	THC	46.4	0
scg13	6/4/2010	17:58:00	3.78	4.09	21.76	16.68	28.95	46.15	2L1152/cg13	THC	46.4	0
scg13	6/4/2010	17:58:15	3.79	4.07	21.70	17.96	29.38	46.30	2L1152/cg13	THC	46.4	0
thcspan1	6/4/2010	17:58:15	3.79	4.07	21.70	17.96	29.38	46.30	2L1152/cg13	THC	46.4	0
scg2	6/4/2010	17:58:30	3.75	4.08	21.65	18.47	29.58	46.42	BLM001094/cg2	NOx	45.3	0
scg2	6/4/2010	17:58:45	3.76	4.10	21.77	16.43	29.64	46.45	BLM001094/cg2	NOx	45.3	0
scg2	6/4/2010	17:59:00	4.22	4.39	21.97	14.83	28.47	46.45	BLM001094/cg2	NOx	45.3	0
scg2	6/4/2010	17:59:15	3.74	4.17	21.53	11.01	16.95	46.60	BLM001094/cg2	NOx	45.3	0
scg2	6/4/2010	17:59:30	0.92	1.11	25.86	5.12	7.95	44.77	BLM001094/cg2	NOx	45.3	0
scg2	6/4/2010	17:59:45	0.21	0.18	36.89	1.29	4.37	2.98	BLM001094/cg2	NOx	45.3	0
scg2	6/4/2010	18:00:00	0.14	0.07	41.28	0.45	2.90	1.02	BLM001094/cg2	NOx	45.3	0
scg2	6/4/2010	18:00:15	0.10	0.05	42.69	0.27	2.12	0.86	BLM001094/cg2	NOx	45.3	0
scg2	6/4/2010	18:00:30	0.08	0.04	42.86	0.25	1.74	0.76	BLM001094/cg2	NOx	45.3	0
scg2	6/4/2010	18:00:45	0.10	0.03	42.93	0.27	1.50	0.76	BLM001094/cg2	NOx	45.3	0
scg2	6/4/2010	18:01:00	0.10	0.03	42.95	0.22	1.35	0.66	BLM001094/cg2	NOx	45.3	0
scg2	6/4/2010	18:01:15	0.10	0.03	42.97	0.23	1.26	0.64	BLM001094/cg2	NOx	45.3	0
noxspan1	6/4/2010	18:01:15	0.10	0.03	42.97	0.23	1.26	0.64	BLM001094/cg2	NOx	45.3	0
scg5	6/4/2010	18:01:30	0.11	0.03	42.99	0.21	1.19	0.57	ALM051832/cg5	CO	42.9	0
scg5	6/4/2010	18:01:45	0.11	0.03	42.97	0.22	1.13	0.62	ALM051832/cg5	CO	42.9	0
scg5	6/4/2010	18:02:00	0.10	0.03	42.99	0.24	1.07	0.58	ALM051832/cg5	CO	42.9	0
scg5	6/4/2010	18:02:15	0.07	0.02	42.94	6.74	1.03	0.61	ALM051832/cg5	CO	42.9	0
scg5	6/4/2010	18:02:30	0.09	0.02	31.67	22.72	1.02	0.62	ALM051832/cg5	CO	42.9	0
scg5	6/4/2010	18:02:45	0.10	0.02	6.71	37.19	0.97	0.64	ALM051832/cg5	CO	42.9	0
scg5	6/4/2010	18:03:00	0.09	0.02	1.96	41.42	0.94	0.63	ALM051832/cg5	CO	42.9	0
scg5	6/4/2010	18:03:15	0.10	0.02	0.70	42.46	0.92	0.71	ALM051832/cg5	CO	42.9	0
scg5	6/4/2010	18:03:30	0.08	0.02	0.48	42.53	0.92	0.58	ALM051832/cg5	CO	42.9	0
scg5	6/4/2010	18:03:45	0.07	0.02	0.39	42.60	0.88	0.54	ALM051832/cg5	CO	42.9	0
scg5	6/4/2010	18:04:00	0.09	0.02	0.38	42.65	0.90	0.63	ALM051832/cg5	CO	42.9	0
cospan1	6/4/2010	18:04:00	0.09	0.02	0.38	42.65	0.90	0.63	ALM051832/cg5	CO	42.9	0

APPENDIX G

Plant Operational Data

Run 1 Date and Time	AAG GAS TO EXT COMB CHMB 220FC6021 MMSCFD	NH3 GAS TO EXT COMB CHMB 220FC6000 MMSCFD	UNIT 220 SULFR PRODUCTION 220SULPRO LTPD	LP NATURAL GAS TO INCIN BURNER 220FC0300 MSCFD	Thermal Oxidizer Duty 220Q0300X MMBTU/HR	EXCESS HYDROGEN TO H2 RX 220FC6049 MSCFD	STACK INLET 220TI0362 DEG F
6/4/2010 11:46	6.638	-0.124	201.274	465.938	19.766	195.68	592.06
6/4/2010 11:47	6.772	-0.124	202.639	469.551	19.814	202.37	592.37
6/4/2010 11:48	6.564	-0.124	202.150	469.915	19.876	195.99	592.79
6/4/2010 11:49	6.778	-0.124	201.381	472.281	20.054	201.93	593.16
6/4/2010 11:50	6.581	-0.124	202.912	475.461	20.181	200.59	593.52
6/4/2010 11:51	6.714	-0.124	201.492	473.612	20.036	199.69	593.96
6/4/2010 11:52	6.677	-0.124	204.268	468.931	20.058	202.66	594.29
6/4/2010 11:53	6.625	-0.124	202.061	471.156	20.014	196.23	594.55
6/4/2010 11:54	6.701	-0.124	203.872	480.591	20.231	202.31	594.55
6/4/2010 11:55	6.608	-0.124	202.293	481.892	20.414	198.22	595.02
6/4/2010 11:56	6.764	-0.124	201.168	492.633	20.401	200.33	595.34
6/4/2010 11:57	6.653	-0.124	204.208	498.775	20.955	198.02	595.48
6/4/2010 11:58	6.605	-0.124	203.445	500.096	21.220	198.15	595.98
6/4/2010 11:59	6.783	-0.124	202.943	512.461	21.406	202.25	596.43
6/4/2010 12:00	6.548	-0.124	202.617	506.988	21.364	198.88	597.07
6/4/2010 12:01	6.777	-0.124	201.895	496.708	21.305	201.17	597.58
6/4/2010 12:02	6.739	-0.124	201.678	485.296	20.629	199.88	597.97
6/4/2010 12:03	6.682	-0.124	199.729	481.340	20.387	201.89	598.00
6/4/2010 12:04	6.699	-0.124	199.425	485.377	20.752	198.20	597.94
6/4/2010 12:05	6.622	-0.124	199.332	485.531	20.660	198.00	597.86
6/4/2010 12:06	6.598	-0.124	198.800	494.552	21.071	199.92	597.86
6/4/2010 12:07	6.636	-0.124	198.632	502.376	21.029	198.05	597.94
6/4/2010 12:08	6.663	-0.124	201.762	497.109	21.112	203.00	597.95
6/4/2010 12:09	6.625	-0.124	199.679	498.220	21.165	198.03	598.33
6/4/2010 12:10	6.662	-0.124	200.870	501.665	21.246	201.07	598.51
6/4/2010 12:11	6.669	-0.124	203.321	505.463	21.414	199.32	598.88
6/4/2010 12:12	6.598	-0.124	202.924	489.223	20.969	199.21	599.08
6/4/2010 12:13	6.550	-0.124	200.857	503.511	21.057	199.63	599.08
6/4/2010 12:14	6.533	-0.124	198.869	503.045	21.278	198.20	599.28
6/4/2010 12:15	6.651	-0.124	199.846	506.580	21.455	202.63	599.29
6/4/2010 12:16	6.685	-0.124	203.117	473.754	20.763	200.71	599.43
6/4/2010 12:17	6.592	-0.124	199.753	496.329	20.178	202.29	599.43
6/4/2010 12:18	6.688	-0.124	202.281	457.359	20.602	198.07	599.23
6/4/2010 12:19	6.591	-0.124	202.238	486.340	19.893	199.53	598.90
6/4/2010 12:20	6.684	-0.124	201.402	454.215	20.395	198.83	598.88
6/4/2010 12:21	6.669	-0.124	204.106	492.994	20.049	199.08	598.70
6/4/2010 12:22	6.598	-0.124	201.510	455.870	20.470	200.60	598.61
6/4/2010 12:23	6.690	-0.124	202.183	496.982	20.405	198.81	598.18
6/4/2010 12:24	6.606	-0.124	202.988	445.218	19.294	202.97	598.00
6/4/2010 12:25	6.639	-0.124	201.411	460.189	19.657	199.72	597.60
6/4/2010 12:26	6.703	-0.124	203.864	484.036	19.571	201.82	597.35
6/4/2010 12:27	6.615	-0.124	201.920	470.329	19.983	198.21	597.35
6/4/2010 12:28	6.702	-0.124	202.655	460.915	19.726	199.78	597.28
6/4/2010 12:29	6.668	-0.124	204.425	480.537	19.926	199.88	597.28
6/4/2010 12:30	6.589	-0.124	201.426	499.889	21.384	198.16	597.36
6/4/2010 12:31	6.653	-0.124	203.552	552.355	23.063	200.89	597.95
6/4/2010 12:32	6.691	-0.124	201.573	570.262	23.988	199.10	599.20
6/4/2010 12:33	6.674	-0.124	203.560	593.098	24.838	203.99	600.82
6/4/2010 12:34	6.741	-0.124	202.084	588.185	24.878	198.20	602.62
6/4/2010 12:35	6.662	-0.124	201.737	592.792	25.157	200.50	604.03
6/4/2010 12:36	6.735	-0.124	204.301	612.831	25.758	199.85	605.19
6/4/2010 12:37	6.672	-0.124	201.374	610.226	25.905	198.26	606.62
6/4/2010 12:38	6.655	-0.124	202.796	613.975	26.006	199.47	608.10
6/4/2010 12:39	6.717	-0.124	203.168	606.107	25.799	198.22	609.36
6/4/2010 12:40	6.621	-0.124	201.669	596.442	25.392	203.63	610.46
6/4/2010 12:41	6.687	-0.124	204.515	590.561	25.107	198.82	611.25
6/4/2010 12:42	6.721	-0.124	202.585	565.378	24.348	199.97	611.59
6/4/2010 12:43	6.659	-0.124	203.485	576.914	24.371	200.57	611.93
6/4/2010 12:44	6.743	-0.124	203.855	600.280	25.202	200.79	611.96
6/4/2010 12:45	6.670	-0.124	201.867	609.571	25.869	198.65	612.26
6/4/2010 12:46	6.676	-0.124	202.951	615.586	26.169	198.72	612.81
6/4/2010 12:47	6.712	-0.124	202.579	616.588	26.167	201.35	613.40
6/4/2010 12:48	6.609	-0.124	200.330	622.608	26.365	199.53	614.03
6/4/2010 12:49	6.602	-0.124	202.356	626.354	26.671	201.37	614.62
6/4/2010 12:50	6.653	-0.124	203.856	619.498	26.324	199.85	615.15
6/4/2010 12:51	6.648	-0.124	203.450	621.880	26.365	203.19	615.53
6/4/2010 12:52	6.701	-0.124	204.194	620.066	26.318	198.39	615.90
6/4/2010 12:53	6.755	-0.124	204.935	610.983	25.939	200.60	616.23
6/4/2010 12:54	6.730	-0.124	203.532	591.440	24.937	200.09	616.23
6/4/2010 12:55	6.688	-0.124	202.819	604.604	25.518	199.38	616.35
6/4/2010 12:56	6.740	-0.124	203.447	615.591	25.971	198.91	616.41
6/4/2010 12:57	6.756	-0.124	201.652	625.721	26.064	198.92	616.47
6/4/2010 12:58	6.632	-0.124	202.759	633.869	26.700	200.43	616.85
6/4/2010 12:59	6.541	-0.124	204.218	642.485	26.921	197.92	617.42
6/4/2010 13:00	6.749	-0.124	201.600	646.521	27.234	203.21	617.95
6/4/2010 13:01	6.661	-0.124	205.041	632.935	26.826	198.11	618.78
6/4/2010 13:02	6.580	-0.124	202.294	625.281	26.427	198.91	619.15
6/4/2010 13:03	6.696	-0.124	204.409	637.091	26.967	199.48	619.39
6/4/2010 13:04	6.621	-0.124	204.316	629.361	26.646	199.23	619.59
6/4/2010 13:05	6.666	-0.124	203.326	627.327	26.566	200.79	619.96
6/4/2010 13:06	6.774	-0.124	205.196	619.959	26.376	198.66	619.96
6/4/2010 13:07	#VALUE!	#VALUE!	#VALUE!	#VALUE!	#VALUE!	#VALUE!	#VALUE!
Average	**6.666**	**-0.124**	**202.383**	**540.197**	**22.874**	**199.850**	**603.967**

Run 2 Date and Time	AAG GAS TO EXT COMB CHMB 220FC6021 MMSCFD	NH3 GAS TO EXT COMB CHMB 220FC6000 MMSCFD	UNIT 220 SULFR PRODUCTION 220SULPRO LTPD	LP NATURAL GAS TO INCIN BURNER 220FC0300 MSCFD	Thermal Oxidizer Duty 220Q0300X MMBTU/HR	EXCESS HYDROGEN TO H2 RX 220FC6049 MSCFD	STACK INLET 220TI0362 DEG F
6/4/2010 14:05	6.656	0.135	203.085	479.057	20.383	198.17	594.88
6/4/2010 14:06	6.760	0.122	202.738	502.282	21.311	203.12	595.33
6/4/2010 14:07	6.667	0.112	202.822	493.247	20.918	201.24	595.65
6/4/2010 14:08	6.754	0.096	203.848	481.299	21.044	203.06	595.97
6/4/2010 14:09	6.748	0.088	204.368	476.410	20.527	195.32	595.97
6/4/2010 14:10	6.703	0.119	204.363	474.440	20.055	204.32	596.08
6/4/2010 14:11	6.717	0.118	204.701	476.893	20.264	195.12	596.14
6/4/2010 14:12	6.711	0.101	206.310	477.363	20.228	204.28	596.10
6/4/2010 14:13	6.645	0.093	204.245	476.897	20.225	199.82	595.93
6/4/2010 14:14	6.686	0.076	202.197	483.402	20.221	198.18	595.67
6/4/2010 14:15	6.763	0.047	203.830	492.447	20.327	201.68	595.55
6/4/2010 14:16	6.678	-0.010	204.454	499.699	20.847	193.85	595.61
6/4/2010 14:17	6.605	-0.060	201.100	499.670	21.304	203.57	595.96
6/4/2010 14:18	6.611	-0.080	202.141	502.711	21.148	194.13	596.33
6/4/2010 14:19	6.689	-0.090	203.307	499.797	21.385	204.55	596.62
6/4/2010 14:20	6.713	-0.093	202.889	496.350	21.160	199.97	596.62
6/4/2010 14:21	6.667	-0.092	200.514	497.019	21.013	198.18	596.77
6/4/2010 14:22	6.592	-0.101	199.504	495.242	20.942	202.19	596.84
6/4/2010 14:23	6.568	-0.108	198.791	487.844	21.119	195.01	596.88
6/4/2010 14:24	6.571	-0.109	199.176	483.365	20.464	203.51	597.06
6/4/2010 14:25	6.544	-0.111	199.223	468.810	20.485	195.32	597.06
6/4/2010 14:26	6.624	-0.111	203.291	464.702	19.978	204.96	596.78
6/4/2010 14:27	6.713	-0.113	202.470	465.167	19.799	199.27	596.66
6/4/2010 14:28	6.649	-0.116	200.657	456.344	19.394	205.25	596.30
6/4/2010 14:29	6.645	-0.120	201.140	446.336	19.015	198.79	595.82
6/4/2010 14:30	6.599	-0.119	201.787	439.904	18.692	204.55	595.23
6/4/2010 14:31	6.566	-0.116	201.438	429.002	18.201	200.90	594.66
6/4/2010 14:32	6.610	-0.116	203.045	428.976	18.160	196.66	593.90
6/4/2010 14:33	6.573	-0.114	205.266	428.071	18.141	202.50	593.21
6/4/2010 14:34	6.724	-0.116	202.402	430.200	18.303	196.63	592.53
6/4/2010 14:35	6.769	-0.121	201.177	427.876	18.189	203.36	592.04
6/4/2010 14:36	6.572	-0.123	203.950	428.225	18.169	195.16	591.51
6/4/2010 14:37	6.696	-0.122	201.868	431.219	18.290	203.99	591.29
6/4/2010 14:38	6.671	-0.121	204.347	431.555	18.330	193.97	591.05
6/4/2010 14:39	6.608	-0.119	203.117	434.585	18.460	204.66	590.85
6/4/2010 14:40	6.783	-0.118	203.459	439.684	18.656	196.70	590.61
6/4/2010 14:41	6.556	-0.115	202.513	439.644	18.776	204.90	590.60
6/4/2010 14:42	6.786	-0.113	201.709	439.529	18.744	198.58	590.54
6/4/2010 14:43	6.611	-0.112	203.378	440.777	18.611	202.09	590.54
6/4/2010 14:44	6.742	-0.119	201.944	440.575	18.699	199.12	590.40
6/4/2010 14:45	6.704	-0.120	202.353	444.762	18.876	199.01	590.34
6/4/2010 14:46	6.588	-0.116	203.017	443.940	18.929	200.84	590.30
6/4/2010 14:47	6.746	-0.124	201.818	443.775	18.859	197.18	590.13
6/4/2010 14:48	6.801	-0.124	203.048	451.787	19.119	200.90	590.20
6/4/2010 14:49	6.600	-0.124	203.875	455.090	19.254	198.46	590.51
6/4/2010 14:50	6.738	-0.124	202.677	457.066	19.541	203.87	590.51
6/4/2010 14:51	6.807	-0.123	202.122	461.920	19.674	193.90	590.82
6/4/2010 14:52	6.601	-0.122	203.620	460.362	19.568	204.63	591.14
6/4/2010 14:53	6.675	-0.122	202.267	459.323	19.519	196.55	591.36
6/4/2010 14:54	6.742	-0.123	200.809	469.476	19.816	202.05	591.56
6/4/2010 14:55	6.766	-0.123	201.582	473.325	20.045	194.21	591.84
6/4/2010 14:56	6.579	-0.124	202.050	477.808	20.209	204.66	592.17
6/4/2010 14:57	6.705	-0.122	201.426	475.479	20.201	196.38	592.69

Run 2 Date and Time	AAG GAS TO EXT COMB CHMB 220FC6021 MMSCFD	NH3 GAS TO EXT COMB CHMB 220FC6000 MMSCFD	UNIT 220 SULFR PRODUCTION 220SULPRO LTPD	LP NATURAL GAS TO INCIN BURNER 220FC0300 MSCFD	Thermal Oxidizer Duty 220Q0300X MMBTU/HR	EXCESS HYDROGEN TO H2 RX 220FC6049 MSCFD	STACK INLET 220TI0362 DEG F
6/4/2010 14:58	6.771	-0.123	201.951	478.188	20.260	204.53	593.12
6/4/2010 14:59	6.670	-0.124	204.388	481.249	20.388	196.44	593.59
6/4/2010 15:00	6.606	-0.124	204.252	474.641	20.217	205.21	593.82
6/4/2010 15:01	6.591	-0.124	203.444	471.443	20.118	197.95	594.07
6/4/2010 15:02	6.700	-0.124	201.751	468.527	19.952	199.29	594.24
6/4/2010 15:03	6.760	-0.124	200.292	469.843	19.875	202.48	594.46
6/4/2010 15:04	6.696	-0.124	200.747	470.352	19.921	196.21	594.46
6/4/2010 15:05	6.672	-0.124	202.597	463.791	19.791	202.30	594.70
6/4/2010 15:06	6.693	-0.124	203.643	459.752	19.565	195.15	594.71
6/4/2010 15:07	6.672	-0.124	203.326	462.607	19.639	202.11	594.70
6/4/2010 15:08	6.729	-0.124	201.347	465.986	19.773	193.70	594.68
6/4/2010 15:09	6.645	-0.124	202.168	462.752	19.636	203.57	594.67
6/4/2010 15:10	6.647	-0.124	201.499	458.927	19.479	193.54	594.62
6/4/2010 15:11	6.775	-0.124	201.555	456.325	19.360	203.71	594.62
6/4/2010 15:12	6.657	-0.124	202.598	456.088	19.321	195.24	594.39
6/4/2010 15:13	6.637	-0.124	204.555	457.024	19.381	204.140	594.289
6/4/2010 15:14	6.648	-0.124	204.957	454.984	19.297	194.948	594.236
6/4/2010 15:15	6.575	-0.124	202.510	455.885	19.246	203.872	594.001
6/4/2010 15:16	6.814	-0.124	202.611	457.760	19.359	193.907	594.001
6/4/2010 15:17	6.638	-0.124	203.567	456.140	19.411	203.938	593.673
6/4/2010 15:18	6.599	-0.124	204.023	448.176	18.863	194.183	593.650
6/4/2010 15:19	6.699	-0.124	202.486	445.211	18.799	205.085	593.529
6/4/2010 15:20	6.691	-0.124	199.998	449.559	18.989	197.362	593.372
6/4/2010 15:21	6.719	-0.124	202.464	442.668	18.817	202.210	593.217
6/4/2010 15:22	6.562	-0.124	203.482	434.622	18.347	200.961	593.015
6/4/2010 15:23	6.781	-0.124	201.709	432.087	18.175	202.204	592.523
6/4/2010 15:24	6.749	-0.124	202.057	440.504	18.596	200.942	592.127
6/4/2010 15:25	6.645	-0.124	204.020	444.428	18.892	202.631	591.926
6/4/2010 15:26	6.596	-0.124	205.414	446.715	18.939	201.054	591.696
6/4/2010 15:27	6.738	-0.124	201.386	449.736	18.992	197.752	591.696
6/4/2010 15:28	6.711	-0.124	204.307	450.521	19.017	202.470	591.710
6/4/2010 15:29	6.624	-0.124	205.181	446.426	18.747	196.300	591.711
6/4/2010 15:30	6.671	-0.124	205.535	451.641	19.242	202.649	591.750
6/4/2010 15:31	6.620	-0.124	203.576	460.906	19.571	196.948	591.800
6/4/2010 15:32	6.649	-0.124	200.839	463.277	19.780	204.149	592.093
6/4/2010 15:33	6.740	-0.124	204.036	470.332	19.868	195.025	592.478
6/4/2010 15:34	6.738	-0.124	205.278	473.803	19.935	204.482	592.659
6/4/2010 15:35	6.621	-0.124	204.368	491.992	21.369	196.495	593.020
6/4/2010 15:36	6.588	-0.124	201.077	518.390	21.593	204.712	593.482
6/4/2010 15:37	6.672	-0.124	201.897	517.076	21.631	196.563	594.263
6/4/2010 15:38	6.667	-0.124	201.336	509.902	21.119	205.744	595.180
6/4/2010 15:39	6.611	-0.124	201.491	503.567	21.382	200.287	595.872
6/4/2010 15:40	6.642	-0.124	201.903	502.706	21.314	199.487	596.498
6/4/2010 15:41	6.668	-0.124	201.264	500.602	20.806	201.215	597.153
6/4/2010 15:42	6.609	-0.124	200.752	512.041	21.425	199.245	597.621
6/4/2010 15:43	6.616	-0.124	201.883	541.138	23.092	202.076	598.264
6/4/2010 15:44	6.644	-0.124	203.273	586.944	24.642	198.143	599.252
6/4/2010 15:45	6.606	-0.124	204.116	608.242	25.743	203.282	600.966
6/4/2010 15:46	6.607	-0.124	204.910	618.277	26.051	195.454	602.847
6/4/2010 15:47	6.588	-0.124	202.100	627.040	26.502	204.524	605.032
6/4/2010 15:48	6.618	-0.124	199.585	634.365	27.229	196.521	607.128
6/4/2010 15:49	6.611	-0.124	203.267	641.577	27.353	204.941	609.163
6/4/2010 15:50	6.697	-0.124	203.096	626.006	26.779	197.155	610.947
6/4/2010 15:51	6.720	-0.124	201.007	598.883	25.356	201.475	612.421
6/4/2010 15:52	6.592	-0.124	204.418	613.711	26.284	202.571	613.301
6/4/2010 15:53	The time is invalid.	The time is invalid.	The time is invalid.	The time is invalid.	The time is invalid.	The time is invalid.	e time is invalid.
Average	**6.668**	**-0.096**	**202.634**	**478.204**	**20.285**	**200.072**	**594.866**

Run 3 Date and Time	AAG GAS TO EXT COMB CHMB 220FC6021 MMSCFD	NH3 GAS TO EXT COMB CHMB 220FC6000 MMSCFD	UNIT 220 SULFR PRODUCTION 220SULPRO LTPD	LP NATURAL GAS TO INCIN BURNER 220FC0300 MSCFD	Thermal Oxidizer Duty 220Q0300X MMBTU/HR	EXCESS HYDROGEN TO H2 RX 220FC6049 MSCFD	STACK INLET 220TI0362 DEG F
6/4/2010 16:29	6.696	-0.082	203.113	471.666	19.955	199.82	594.29
6/4/2010 16:30	6.771	-0.090	204.267	466.907	19.901	201.92	594.29
6/4/2010 16:31	6.827	-0.092	208.116	462.799	19.639	198.93	594.26
6/4/2010 16:32	6.716	-0.090	204.384	461.633	19.573	203.56	594.24
6/4/2010 16:33	6.786	-0.087	203.170	464.595	19.630	198.12	594.20
6/4/2010 16:34	6.774	-0.092	206.557	458.635	19.378	200.97	594.01
6/4/2010 16:35	6.695	-0.094	206.218	445.635	19.023	201.79	594.01
6/4/2010 16:36	6.728	-0.095	204.715	453.345	19.134	200.75	593.66
6/4/2010 16:37	6.786	-0.089	203.870	454.996	19.276	201.31	593.56
6/4/2010 16:38	6.723	-0.093	202.509	455.797	19.337	198.79	593.26
6/4/2010 16:39	6.679	-0.092	203.803	452.795	19.252	200.26	593.26
6/4/2010 16:40	6.747	-0.096	205.885	453.037	19.204	199.43	593.01
6/4/2010 16:41	6.787	-0.100	205.210	445.034	18.966	202.67	592.83
6/4/2010 16:42	6.708	-0.105	203.262	449.320	18.996	196.10	592.61
6/4/2010 16:43	6.682	-0.109	204.177	457.596	19.315	202.69	592.56
6/4/2010 16:44	6.756	-0.108	205.882	459.309	19.643	196.13	592.35
6/4/2010 16:45	6.757	-0.104	203.988	470.503	19.928	202.54	592.66
6/4/2010 16:46	6.652	-0.107	201.975	469.244	19.936	194.99	592.86
6/4/2010 16:47	6.633	-0.107	203.965	468.292	19.898	203.32	593.15
6/4/2010 16:48	6.733	-0.110	205.149	462.180	19.686	194.86	593.15
6/4/2010 16:49	6.716	-0.111	202.412	462.033	19.580	203.95	593.45
6/4/2010 16:50	6.623	-0.111	201.759	459.615	19.470	193.47	593.47
6/4/2010 16:51	6.705	-0.113	204.494	456.286	19.415	204.01	593.47
6/4/2010 16:52	6.778	-0.113	206.200	455.160	19.361	193.75	593.45
6/4/2010 16:53	6.735	-0.116	203.074	453.806	19.042	204.58	593.45
6/4/2010 16:54	6.676	-0.120	201.485	450.113	18.960	196.51	593.28
6/4/2010 16:55	6.658	-0.120	201.952	446.598	18.799	204.51	593.26
6/4/2010 16:56	6.700	-0.115	201.421	434.807	18.542	196.02	593.15
6/4/2010 16:57	6.742	-0.120	203.564	430.299	18.463	203.50	592.99
6/4/2010 16:58	6.752	-0.115	203.520	428.864	18.301	199.36	592.67
6/4/2010 16:59	6.710	-0.112	202.706	434.613	18.354	205.52	592.24
6/4/2010 17:00	6.711	-0.114	203.646	436.710	18.639	199.84	592.11
6/4/2010 17:01	6.791	-0.120	205.190	442.243	18.623	202.34	592.05
6/4/2010 17:02	6.783	-0.121	203.079	445.410	19.001	200.62	591.79
6/4/2010 17:03	6.768	-0.122	206.500	441.972	18.910	202.03	591.79
6/4/2010 17:04	6.866	-0.124	206.394	441.175	18.664	195.24	591.96
6/4/2010 17:05	6.763	-0.124	204.293	444.826	18.937	203.88	592.04
6/4/2010 17:06	6.794	-0.124	206.806	446.852	18.900	193.52	592.03
6/4/2010 17:07	6.903	-0.124	207.200	444.134	18.966	204.68	592.02
6/4/2010 17:08	6.891	-0.124	206.785	456.970	19.426	193.09	592.02
6/4/2010 17:09	6.886	-0.124	207.031	468.927	20.118	205.47	592.28
6/4/2010 17:10	6.825	-0.124	204.323	475.582	19.897	193.44	592.67
6/4/2010 17:11	6.767	-0.124	203.016	492.517	20.679	205.98	593.24
6/4/2010 17:12	6.762	-0.124	205.129	478.228	20.229	198.35	593.77
6/4/2010 17:13	6.770	-0.124	205.761	499.427	20.945	204.34	594.36
6/4/2010 17:14	6.828	-0.124	208.114	477.790	20.663	199.48	594.98
6/4/2010 17:15	6.887	-0.124	207.535	497.956	20.522	200.74	595.18
6/4/2010 17:16	6.777	-0.124	203.540	494.220	20.882	203.25	595.51
6/4/2010 17:17	6.710	-0.124	204.476	496.855	21.050	195.02	595.93
6/4/2010 17:18	6.765	-0.124	204.552	502.334	21.158	203.70	596.26
6/4/2010 17:19	6.808	-0.124	204.093	502.657	21.280	195.08	596.62
6/4/2010 17:20	6.806	-0.124	205.483	495.767	21.032	203.68	597.07
6/4/2010 17:21	6.789	-0.124	206.126	497.029	20.957	193.78	597.29
6/4/2010 17:22	6.786	-0.124	204.884	500.061	21.146	206.27	597.29
6/4/2010 17:23	6.782	-0.124	205.019	501.253	21.283	193.58	597.56
6/4/2010 17:24	6.771	-0.124	203.613	494.895	21.001	206.27	597.58
6/4/2010 17:25	6.739	-0.124	203.941	491.110	20.827	196.56	597.70
6/4/2010 17:26	6.754	-0.124	204.121	493.221	20.876	206.03	597.84
6/4/2010 17:27	6.715	-0.124	203.413	488.699	20.724	196.59	597.81
6/4/2010 17:28	6.684	-0.124	201.899	474.850	20.461	200.33	597.65
6/4/2010 17:29	6.680	-0.124	205.063	471.552	20.176	201.97	597.58
6/4/2010 17:30	6.795	-0.124	207.934	463.435	19.655	196.62	597.22
6/4/2010 17:31	6.850	-0.124	205.261	453.949	19.284	202.65	596.91
6/4/2010 17:32	6.718	-0.124	204.526	445.700	18.949	196.83	596.41
6/4/2010 17:33	6.769	-0.124	207.323	443.019	18.831	203.03	595.96
6/4/2010 17:34	6.874	-0.121	207.918	447.185	19.110	192.10	595.24
6/4/2010 17:35	6.802	-0.122	203.738	454.366	19.239	205.76	594.75
6/4/2010 17:36	6.709	-0.124	206.950	448.058	19.055	194.87	594.44
6/4/2010 17:37	6.876	-0.123	209.065	449.183	18.970	206.29	594.32
6/4/2010 17:38	6.872	-0.123	206.616	452.148	19.194	195.09	594.05
6/4/2010 17:39	6.793	-0.120	204.882	455.290	19.297	206.19	593.92
6/4/2010 17:40	6.754	-0.117	207.343	458.193	19.355	198.48	593.93

Run 3 Date and Time	AAG GAS TO EXT COMB CHMB 220FC6021 MMSCFD	NH3 GAS TO EXT COMB CHMB 220FC6000 MMSCFD	UNIT 220 SULFR PRODUCTION 220SULPRO LTPD	LP NATURAL GAS TO INCIN BURNER 220FC0300 MSCFD	Thermal Oxidizer Duty 220Q0300X MMBTU/HR	EXCESS HYDROGEN TO H2 RX 220FC6049 MSCFD	STACK INLET 220TI0362 DEG F
6/4/2010 17:41	6.837	-0.118	210.279	463.413	19.595	198.67	593.98
6/4/2010 17:42	6.962	-0.122	208.818	468.339	19.842	201.82	593.98
6/4/2010 17:43	6.879	-0.124	209.321	468.019	19.911	198.70	594.14
6/4/2010 17:44	6.968	-0.124	207.414	468.206	19.866	201.64	594.21
6/4/2010 17:45	6.944	-0.124	208.610	466.873	19.793	198.44	594.41
6/4/2010 17:46	6.816	-0.124	210.521	465.339	19.769	202.01	594.67
6/4/2010 17:47	6.909	-0.124	209.153	466.834	19.791	193.62	594.67
6/4/2010 17:48	6.983	-0.124	207.827	468.179	19.834	205.76	594.77
6/4/2010 17:49							
Average	**6.776**	**-0.115**	**205.217**	**463.706**	**19.666**	**200.098**	**594.238**

APPENDIX H

LDEQ Permit

3039-V6
BENZ. PREFRACT.

GME TITLE 5

BOBBY JINDAL
GOVERNOR

HAROLD LEGGETT, PH.D.
SECRETARY

State of Louisiana

DEPARTMENT OF ENVIRONMENTAL QUALITY
ENVIRONMENTAL SERVICES

Certified Mail No. 7009 1410 0001 6727 5211

RECEIVED
OCT 05 2009
Marathon Petroleum Company LLC
Environmental Department

Agency Interest No. 3165
Activity No.: PER20090017

Mr. Richard D. Bedell
Manager, Louisiana Refining Division
Marathon Petroleum Company LLC
P. O. Box AC
Garyville, Louisiana 70051

RE: Part 70 Operating Permit Modification, ~~Garyville Major Expansion,~~ Louisiana Refining Division, Garyville Refinery, Marathon Petroleum Company LLC, Garyville, St. John the Baptist Parish, Louisiana

Dear Mr. Bedell:

This is to inform you that the permit modification for the above referenced facility has been approved under LAC 33:III.501. The permit is both a state preconstruction and Part 70 Operating Permit. The submittal was approved on the basis of the emissions reported and the approval in no way guarantees the design scheme presented will be capable of controlling the emissions as to the types and quantities stated. A new application must be submitted if the reported emissions are exceeded after operations begin. The synopsis, data sheets and conditions are attached herewith.

It will be considered a violation of the permit if all proposed control measures and/or equipment are not installed and properly operated and maintained as specified in the application.

Operation of this facility is hereby authorized under the terms and conditions of this permit. This authorization shall expire at midnight on the 27th of December, 2011, unless a timely and complete renewal application has been submitted six months prior to expiration. Terms and conditions of this permit shall remain in effect until such time as the permitting authority takes final action on the application for permit renewal. The permit number and agency interest number cited above should be referenced in future correspondence regarding this facility.

Please be advised that pursuant to provisions of the Environmental Quality Act and the Administrative Procedure Act, the Department may initiate review of a permit during its term. However, before it takes any action to modify, suspend or revoke a permit, the Department shall, in accordance with applicable statutes and regulations, notify the permittee by mail of the facts or operational conduct that warrant the intended action and provide the permittee with the opportunity to demonstrate compliance with all lawful requirements for the retention of the effective permit.

Done this 29 day of September, 2009.

Permit No.: 3039-V6

Sincerely,

Cheryl Sonnier Nolan
Assistant Secretary
SGQ
c: EPA Region VI

Post Office Box 4313 • Baton Rouge, Louisiana 70821-4313 • Phone 225-219-3181 • Fax 225-219-3309
www.deq.louisiana.gov

AIR PERMIT BRIEFING SHEET
AIR PERMITS DIVISION
LOUISIANA DEPARTMENT OF ENVIRONMENTAL QUALITY

GARYVILLE MAJOR EXPANSION, LOUISIANA REFINING DIVISION
AGENCY INTEREST NO. 3165
MARATHON PETROLEUM COMPANY LLC
GARYVILLE, ST. JOHN THE BAPTIST PARISH, LOUISIANA

I. BACKGROUND

Marathon Petroleum Company (MPC) LLC, an existing petroleum facility began operation in and around September 1976. The Louisiana Refining Division currently operates under several Part 70 Permits No. 2891-V6 dated November 26, 2008; Permit No. 2893-V9 dated January 6, 2009; Permit No. 2887-V7 dated January 6, 2009; and No. 2640-V5 dated December 27, 2006; and several Prevention of Significance Deterioration Permits No. PSD-LA-548 dated March 16, 1989; PSD-LA-568(M-1) dated August 27, 1998; PSD-LA-640(M-1) dated April 10, 2008, and PSD-LA-719(M-1) dated May 28, 2008. MPC is in the process of expanding their operations (Garyville Major Expansion (GME) Project) which were approved under Part 70 Operating Permit No. 3039-V0 and Prevention of Significance Deterioration Permit No. PSD-LA-719 both dated December 27, 2006. The facility is currently under construction as per the approved Part 70 Operating Permit No. 3039-V5 dated August 3, 2009 and PSD-LA-719(M-1) dated May 28, 2008.

II. ORIGIN

A permit application dated August 11, 2009 was received to modify the existing permit based on the removal of Sulfolane Project and inclusion of Benzene Prefractionation Project at the facility. Additional information as of September 11, 2009, was also received.

III. DESCRIPTION

In order to help meet the energy needs of the nation, Marathon Petroleum Company (MPC) is expanding the existing full conversion petroleum refinery under Part 70 Permit No. 3039-V0 dated December 27, 2006. This project was named the Garyville Major Expansion (GME) Project and will increase the total capacity of the Louisiana Refining Division to 425,000 barrels per calendar day.

The refining operations typically involve the following four categories: storage, separation, conversion, and blending. MPC currently processes crude oil into unleaded, mid-grade, super unleaded, and reformulated gasoline; jet fuel/kerosene; low and high sulfur diesel and No. 6 fuel oil; isobutane; propane; propylene; asphalt; coke and sulfur. Processes used in the refining of the crude oil are atmospheric distillation, vacuum distillation, desalting, fluid catalytic cracking, hydrotreating, asphalt production, hydrogen fluoride (HF) alkylation, reforming, isomerization, hydrocracking, and coking.

AIR PERMIT BRIEFING SHEET
AIR PERMITS DIVISION
LOUISIANA DEPARTMENT OF ENVIRONMENTAL QUALITY

GARYVILLE MAJOR EXPANSION, LOUISIANA REFINING DIVISION
AGENCY INTEREST NO. 3165
MARATHON PETROLEUM COMPANY LLC
GARYVILLE, ST. JOHN THE BAPTIST PARISH, LOUISIANA

GME Project: The facility is under the process of constructing new equipment, process units and plants; Crude/Vacuum Distillation Unit, Saturates Gas Plant, Gas Oil Hydrocracker Unit, Naphtha Hydrotreater, Kerosene Hydrotreater, CCR Platformer (Reformer), Delayed Coker, Merox Unit, Coker Gas Plant (Unsaturates Gas Plant), Sulfur Block, Sulfur Recovery Units (SRUs), Raw Water Treatment Plant, Steam Plant, Cooling Water Towers, Flare System, Control Room, Pipe Racks, Tank Farm Piping and Blending Facilities, Loading Rack and Rail Facilities, and Tank Farm. The existing Marine Ship Dock Wastewater Treatment System and Storm Water Storage capacity will be expanded.

The facility is also in the process of modifying or revamping the existing units; Fluid Catalytic Cracking Unit, Main Fractionator and Gas Con Towers, Wet Gas Compressor, HF Alkylation Unit, Gas Oil Hydrotreater, Crude Unit, Light Straight Run Hydrotreater (LSR HT) and Penex Units, Potable Water Unit, and Tie-Ins to facilitate the GME Project.

The facility is voluntarily installing Selective Catalytic Reduction (SCR) in addition to Ultra Low NO_X Burners (ULNB) to reduce NO_X emissions limit to 0.0125 lb/MM BTU on the following equipment: GME A and B Crude Heaters (Emission Points 1-08 and 2-08), GME A and B Vacuum Tower Heaters (Emission Points 3-08 and 4-08), and GME Coker Charge Heater (Emission Point 15-08). The SCR could have been rejected on the basis of economical infeasibility ($10,000 to $73,000 per ton NO_X reduction based on heater size). These requirements are included in PSD permit, Permit No. PSD-LA-719(M-1) dated May 28, 2008

Other heaters will have ULNB with a limit of 0.03 lb/MM BTU w/o air preheat as BACT for NO_X emissions and the boilers will have ULNB with Fuel Gas Recirculation (FGR) with a limit of 0.04 lb/MM BTU as BACT for NO_X emissions.

Heaters and boilers fired with refinery fuel gas having a capacity (heat input) less than 100 MM BTU/hr will have good engineering practice (proper burner design and operation, efficient tuning of the burner fuel) and 0.04 lb/MM BTU emissions limit as BACT for CO and heaters and boilers having a capacity (heat input) greater than 100 MM BTU/hr will have good engineering practice (efficient tuning of the burner fuel input) and 0.02 lb/MM BTU emissions limit as BACT for CO; 0.0015 lb/MM BTU as BACT for VOC; similarly good engineering practice (burner design and fuel) and 0.0075

lb/MM BTU as BACT for PM_{10}; and low sulfur refinery fuel gas (25 ppmv as H_2S plus 15 ppmv as other sulfur compounds) as BACT for SO_2.

The Sulfur Recovery Unit will have Parallel, Multistage Claus trains and a tail gas treater (efficiency 99.9% or greater), TGTU Thermal Oxidizer (greater than 99.5% conversion efficiency checked by continuous emission monitors (CEM)), and a SO_2 limit of 93.41 ppm on a dry basis corrected to 0% excess air at the TGTU exhaust outlet. Proper operating work practices for sour water tank storage, recycling sulfur pit vent gas to the SRU, and excess SRU capacity is considered as BACT for SO_2. A limit of 15 ppmv is considered BACT for H_2S prior to loading from the sulfur pit. This will be achieved by degassing of the liquid sulfur and routing the emissions from the sulfur pit back to the Acid Gas stream entering the SRU. For the Tail Gas Thermal Oxidizer the proposed fuel is the refinery fuel gas and pipeline natural gas. Optimized air-fuel ratio is considered as BACT for PM_{10}, CO and VOC emissions. An emission limit of 0.20 lb/MM BTU is considered as BACT for NO_X.

The facility is installing thirteen new large cylindrical tanks associated with the GME Project to store gasoline, crude oil, sweet kerosene, ultra low sulfur diesel, No. 6 fuel oil, etc. Some existing tanks will also be utilized to store additional products. If the new storage tanks are subject to NSPS and NESHAP requirements then that requirement will be considered as BACT. Existing tanks are already controlled under the federal or state requirements. Some tanks may not be controlled under BACT because of economical infeasibility as the VOC cost effectiveness will be from $16,100 to $104,700 per ton VOC reduction to modify the existing storage tank to a floating roof tank or using Thermal Oxidation as an add-on control device.

The Heat Exchangers/Refinery Cooling Towers will have a monthly monitoring program which has been determined as BACT for VOC emissions. High efficiency drift eliminators have been determined as BACT for PM_{10} emissions from the Refinery Cooling Towers along with a new drift rate of 0.001 percent of the circulating water rate.

A Leak Detection and Repair (LDAR) program complying with both the First Revised Consent Decree and NSPS, Subpart GGGa has been determined as BACT for fugitive emissions associated with the GME Project.

The PM_{10} emissions from coke handling process may occur at conveyor transfer points, open piles, crane handling, the coke crusher, and the marine barge loading. Maintaining

moisture content of 8-12% has been determined as BACT along with an enclosed conveyor and minimizing wind exposure (area enclosed by wall) at the coke pit.

The proposed design of the Wastewater Treatment Plant with an equalization tank having an external floating roof, biotreatment and oil water separators along with the requirements of the NSPS and NESHAP regulations have been determined as BACT for VOC emissions.

Loading losses from the marine loading having a true vapor pressure greater than 0.5 psia shall be routed to the new Marine Vapor Combustor which has been determined as BACT for VOC emissions. The Marine Vapor Combustor and the GME Flare shall comply with the requirements of NSPS which has been determined as BACT for all the criteria pollutants from the marine loading operations.

The facility will utilize catalyst additive to lower FCCU Regenerator Vent NO_X concentration to 40 ppm at 0% oxygen (annual average) which has been determined as BACT for NO_X emissions. Full burn combustion has been determined as BACT for CO and VOC emissions. The FCCU consists of a Venturi Wet Scrubber to control SO_2 and PM_{10} emissions. A concentration limit of 0.3 lb/1000 lb of coke burn has been determined as BACT for PM_{10} emissions and a SO_2 concentration of 25 ppmv at 0% oxygen (annual average) has been determined as BACT for SO_2 emissions and as surrogate for H_2SO_4 emissions. The FCCU Regenerator Vent is equipped with a SO_2 CEM as required under the First Revised Consent Decree – A NSR Global Settlement (Civil Action No. 01-CV-40119-PVG) between USA EPA and Marathon Ashland Petroleum date of entry November 17, 2005

In order to have operational flexibility mass emission rate control plans (CAPs) have been developed in accordance with LAC 33:III.925; GME Fugitive Cap, Emission Point GME FUG; GME Heater/Boiler Cap, Emission Point GME HBC; and GME Thermal Oxidizer Cap, Emission Point GME TOC. All other affected equipment has been dealt under the Part 70 Operating permits; Permit Nos. 2891-V5, 2893-V7, 2887-V5, and 2640-V5 or related current permits.

In addition, the facility incorporated an enhanced air monitoring program at the facility as per the specific requirements of the above referenced permits to address citizen concerns. The program is to measure concentration at the four designated locations (A, B, C, and D) around the proposed GME area. The facility will monitor the concentration of $PM_{2.5}$, SO_2, H_2S, Benzene, Toluene, Xylene (m, p, and o), and n-Hexane continuously; and

Total VOCs, LTAPs, and Biphenyl weekly. The results shall be reported to the LDEQ quarterly within 45 days of the end of the previous calendar quarter.

The facility removed the emission points associated with the Hydrogen Plant which was part of the GME Project. The removal was approved under Part 70 Permit No. 3039-V3 dated April 22, 2008.

The facility incorporated the Sulfolane Project (SULFP) to meet USEPA Mobile Source Air Toxics (MSAT) Phase 2 final rule requirements dated February 9, 2007. This rule will limit the benzene content of the gasoline produced to an annual average of 0.62 percent by volume. This project was permitted in the Part 70 Permit No. 3039-V5 dated August 3, 2009.

With Permit No. 3039-V5, the facility updated the GME Project including the Sulfolane Project and the following changes based on the new updated design as follows:

1. Reduce the firing rates of three heaters, Emission Points 5-08, 6-08, and 15-08. The overall emissions from the Heater and Boiler CAP, Emission Point GME HBC will reduce;
2. Update the total sulfur content in the refinery fuel gas from 25 ppmv to 40 ppmv to compensate for contribution from other sulfur compounds in addition to the contribution of H_2S. The affected equipments are heaters and boiler, Emission Points 1-08 thru 6-08, 7A-08 thru 7C-08, 9-08 thru 13-08, 15-08, and 16-08. The heaters and boiler are permitted under GME Heater/Boiler CAP, and the overall emissions from the CAP will be reduced except for sulfur dioxide emissions;
3. Update the stack parameters for heaters and boilers;
4. Reroute the disulfide off gas stream to Crude Heater A and B, Emission Point 1-08 and 2-08;
5. Update the emissions based on the HCl percentage reduction limit of 97% using a control device [40 CFR 63.1567(a)(1)(i)] instead of HCl concentration limit of 10 ppmv corrected to 3% O_2 [(40 CFR 63.1567(a)(1)(ii)] for the GME Platformer Regenerator Vent, Emission Point 23-08. HCL emissions will increase more than the minimum emission rate (MER). This increase in HCl emissions from 18.42 to 20.33 tons per year is approximately 10.37%. Initially off-property maximum HCl concentration was predicted to be 48.34 ug/m^3 and the ambient air standard

for HCl is 180 ug/m^3; therefore, the department did not require the facility to perform additional modeling;

6. Update the averaging time for heaters having a heat input capacity greater than 40 MM BTU/hr from 3 hour rolling average to 365 successive operating day rolling average;
7. Incorporate specific conditions for heaters, Emission Points 5-08, 9-08, 11-08, and 12-08 to operate at low heat input with a higher NOx concentration immediately after catalyst change which may happen once in three years;
8. Incorporate the NSPS, 40 CFR 60, Subpart Ja requirements based on the definition of "new source" under the Clean Air Act Section 111(a)(2). The affected sources will be Emission Points 9-08, 10-08, and 15-08 along with the GME SRU Thermal Oxidizers, Emission Points 18-08 and 19-08;
9. Revise the LDAR Program consolidation table to include NSPS, 40 CFR 60, Subpart GGGa as the most stringent program for the GME Project;
10. Incorporate the NSPS, Subpart Ja requirements which were promulgated on June 24, 2008, as this subpart is an amendment to NSPS, Subpart J;
11. Update the emissions from the Cooling Towers, Emission points 24-08 and 32-08 (flow rate, drift factor, and total dissolved solids (TDS));
12. Incorporate the gasoline storage tanks, Emission Points 1-07 and 2-07, under an emission cap, Gasoline Storage Tank CAP, Emission Point GST;
13. Remove the current permitted stick flare, Emission Point 20-08, and respective startup/shutdown (SU/SD) emissions, Emission Point 20-08 SU/SD instead permit two ground flares, North and South Ground Flares, Emission Points 20A-08 and 20B-08, along with their respective startup/shutdown emissions, Emission Point 20A-08 SU/SD and 20B-08 SU/SD. The emissions increase due to this change is insignificant;
14. Incorporate the applicable requirements of NSPS, 40 CFR 60, Subpart NNN and Subpart RRR as appropriate.

The facility is mothballing the Sulfolane Project and proposing, with this modification, an alternate project, the Benzene Prefractionation (BPF) Project, to comply with the MSAT 2 rule as referenced above. The BPF project will generate early benzene credits and meets the MSAT 2 rule benzene reduction to less than 0.62 percent by volume in the produced gasoline at the facility.

Benzene Prefractionation Project (BPF): The facility will remove benzene and benzene precursors off from the GME Hydrocracker light naphtha stream and both Crude Units' light naphtha streams. This BPF will increase the overall volume of light naphtha to

process by lifting C6 and C7 range hydrocarbons out of the crude heavy naphtha streams. Both the composition shift and the volume increase will burden the hydraulics and heat transfer capacity in the Crude Unit Splitter and Deisopentanizer (DIP) towers, the Penex Unit, the Gasoline Desulfurization Unit (GDU), and the GME Hydrocracker Unit. There will not be any change in the current permitted crude refining capacity of the facility.

In order to achieve this goal the following modifications will be undertaken at the facility:

GME Hydrocracker: A new pipeline will be installed from the discharge of the Naphtha Splitter Reflux pumps to the suction on the Penex charge pumps for a normal supply of 7,000 barrels per day. The Naphtha Splitter reflux pumps will be upgraded to meet this demand. To minimize the deactivation of the Penex reactor catalyst, the Hydrocracker Debutanizer Bottoms will be rerouted and treated in the Heavy Naphtha Sulfur Guard Beds. The treated stream will then enter the Naphtha Splitter. The Heavy Naphtha Sulfur Guard Beds will also be rerated to accommodate the flow increase.

Existing Crude Unit and GME Vacuum Unit: The flow rate from GME Vacuum Unit will increase by 50% in the BPF mode. The Crude Unit Stabilizer Bottoms control valve will be replaced to accommodate the increased flow rate. Benzene from the DIP overhead stream will be routed to the GDU. To achieve this goal, a section of the pipeline will be modified.

Penex Unit: The BPF will require increased supply of hydrogen to the Penex Unit. A new pipe will be installed to import hydrogen from the existing refinery hydrogen pipeline.

The other modifications will be to the reactor feed where the Cold Combined Feed Exchangers will be piped in parallel, a new Hot Combined Feed Exchanger will be installed, and piping will be upsized. In order to meet the temperature requirements on the Product Separator, the Reactor Products Condenser Fan will be demolished and replaced with a new larger finfan bank. A bypass line with a delta pressure controller will be installed around the Reactor Product Trim Coolers in order to accommodate the hydraulic requirements.

To accommodate the high flow rate and heat transfer requirements, the Stabilizer Feed/Bottoms Exchangers will be demolished and replaced with a single Compabloc welded plate-type exchanger along with piping and fugitive components.

AIR PERMIT BRIEFING SHEET
AIR PERMITS DIVISION
LOUISIANA DEPARTMENT OF ENVIRONMENTAL QUALITY

GARYVILLE MAJOR EXPANSION, LOUISIANA REFINING DIVISION
AGENCY INTEREST NO. 3165
MARATHON PETROLEUM COMPANY LLC
GARYVILLE, ST. JOHN THE BAPTIST PARISH, LOUISIANA

Gasoline Desulfurization Unit (GDU): The Selective Hydrogenation Unit (SHU) will require more preheat duty. The tube bundle in the SHU Pre-heater will be replaced with a new bundle containing larger diameter tubes. A second identical shell will be added in series to increase surface area of the SHU reactor preheat section. The existing piping and fugitive components will also be modified as required.

A fourth shell and three new bundles will be added to the Stabilizer Feed/Bottoms Exchangers. The increased flow to the unit will require the top ten trays of the Stabilizer to be upgraded (Koch Superfrac trays). Stabilizer Reflux pumps will also be upgraded along with the Stabilizer Trim Condensers.

Modifications to other Units: Tie-ins as appropriate will be made in Penex Unit, Crude Unit, Gasoline Desulfurization Unit, Interconnect Pipeways Tank Farm, and the GME Hydrocracker Unit. The GDU heaters will experience an increase in their firing rate.

Estimated emissions increase due to the inclusion of BPF Project based on permitted (GME Project is still under construction) emissions and actual/incremental (affected units or equipment at the facility) emissions to projected actual emissions in tons per year are as follows:

Pollutant	2007/8 Baseline Average Emissions (a)	Projected Actual BPF Emissions (b)	Change
PM_{10}	4.54	6.43	+ 1.89
SO_2	3.40	5.28	+ 1.88
NO_X	56.97	64.68	+ 7.71
CO	27.89	38.44	+ 10.55
VOC	240.32	249.21	+ 8.89

The GME project is still under construction and is expected to be commissioned in the first quarter of 2010.

AIR PERMIT BRIEFING SHEET
AIR PERMITS DIVISION
LOUISIANA DEPARTMENT OF ENVIRONMENTAL QUALITY

GARYVILLE MAJOR EXPANSION, LOUISIANA REFINING DIVISION
AGENCY INTEREST NO. 3165
MARATHON PETROLEUM COMPANY LLC
GARYVILLE, ST. JOHN THE BAPTIST PARISH, LOUISIANA

Permitted emissions from the GME facility based on the inclusion of BPF and the removal of SULFP in tons per year are as follows:

Pollutant	Before	After	Change
PM_{10}	126.56	120.02	- 6.54
SO_2	436.45	430.15	- 6.30
NO_X	481.10	470.12	- 10.98
CO	381.02	345.89	- 35.13
VOC *	404.95	386.94	- 18.01

* VOC LAC 33:III Chapter 51 Toxic Air Pollutants (TAPs):

Pollutant	Before	After	Change
1,3-Butadiene	<0.01	<0.01	-
2,2,4-Trimethylpentane	3.63	3.63	-
Benzene	12.43	1.24	- 11.19
Biphenyl	<0.01	<0.01	-
Cresol	<0.01	<0.01	-
Cumene	0.07	<0.01	- 0.07
Ethyl benzene	2.43	2.11	- 0.32
Formaldehyde	0.01	0.01	-
Naphthalene	0.07	<0.01	- 0.07
Styrene	<0.01	<0.01	-
n-Hexane	4.02	3.60	- 0.42
Polynuclear aromatic hydrocarbons	<0.01	<0.01	-
Toluene	7.40	5.64	- 1.76
Xylenes	8.93	7.42	- 1.51
Total	**38.99**	**23.65**	**- 15.34**

Other VOC (TPY): 363.29

Non VOC Toxic Air Pollutants (TAPs)

Pollutant	Before	After	Change
Ammonia	35.80	31.19	- 4.61
Hydrochloric acid	2.25	2.25	-
Hydrofluoric acid	0.02	0.02	-
Hydrogen sulfide	2.56	2.56	-
Nickel (and compounds)	<0.01	<0.01	-
Tetrachloroethylene	0.47	0.47	-
Total	**41.08**	**36.47**	**- 4.61**

V. TYPE OF REVIEW

This permit was reviewed for compliance with Louisiana Air Quality Regulations and New Source Performance Standards (NSPS) and National Emission Standards for Hazardous Air Pollutants (NESHAP). Prevention of Significant Deterioration (PSD) does not apply. Also based on the Consent Decree – A NSR Global Settlement (Civil No. 01-40119) between USA EPA and Marathon Ashland Petroleum date of entry August 28, 2001 and the First Revised Consent Decree – A New Source Review (NSR) Global Settlement (Civil Action No. 01-CV-40119-PVG) between USA EPA and Marathon Ashland Petroleum date of entry November 17, 2005.

This facility is part of a major source of toxic air pollutants. The Air Toxic Compliance Plan No. 92050 was approved April 13, 1995 and has been incorporated in this permit.

The facility is classified under "Petroleum Refineries" for which there are established standards in New Source Performance Standards (NSPS), Subpart Db – Standards of Performance for Industrial-Commercial-Institutional Steam Generating Units; NSPS, 40 CFR 60, Subpart J and Ja– Petroleum Refineries. Marathon Petroleum Company LLC is also subject to NSPS, Subpart GGG and GGGa– Standards of Performance for Equipment Leaks of VOC in Petroleum Refineries; 40 CFR 60, Subpart QQQ – Standards of Performance for VOC Emissions From Petroleum Refinery Wastewater System; National Emission Standards for Hazardous Air Pollutants, NESHAP, 40 CFR 63, Subpart CC – National Emission Standards for Hazardous Air Pollutants From Petroleum Refineries; NESHAP, 40 CFR 63, Subpart UUU - National Emission Standards for Hazardous Air Pollutants for Petroleum Refineries: Catalytic Cracking Units, Catalytic Reforming Units, and Sulfur Recovery Units; and NESHAP, 40 CFR 61,

Subpart FF – National Emission Standard for Benzene Waste Operations. The refinery as a whole is a major source of toxic air pollutants and must comply with all applicable provisions of LAC 33:III.Chapter 51 – Comprehensive Toxics Air Pollutant Emission Control Program. MPC is also subject to all the applicable provisions of Louisiana Refinery MACT Determination dated July 26, 1994.

V. CREDIBLE EVIDENCE

Notwithstanding any other provisions of any applicable rule or regulation or requirement of this permit that state specific methods that may be used to assess compliance with applicable requirements, pursuant to 40 CFR Part 70 and EPA's Credible Evidence Rule, 62 Fed. Reg. 8314 (Feb. 24, 1997), any credible evidence or information relevant to whether a source would have been in compliance with applicable requirements if the appropriate performance or compliance test or procedure had been performed shall be considered for purposes of Title V compliance certifications. Furthermore, for purposes of establishing whether or not a person has violated or is in violation of any emissions limitation or standard or permit condition, nothing in this permit shall preclude the use, including the exclusive use, by any person of any such credible evidence or information.

VI. PUBLIC NOTICE

A public notice is not required to include the applicability of recently promulgated new source performance standard (NSPS) as the GME Project is still under construction and expected to commence production in 2010. There is no actual emissions increase due to the inclusion of the new promulgated NSPS requirements.

VII. EFFECTS ON AMBIENT AIR

The facility shall comply with ambient air standard requirements of Louisiana Toxic Air Pollutants (LTAP) for the following compounds: 1,1,2,2-Tetrachloroethane, 1-3,Butadiene, Ammonia, Arsenic, Barium, Benzene, Biphenyl, Cadmium, Chromium, Copper, Ethylbenzene, Formaldehyde, Hydrochloride, Hydrogen Sulfide, Mercury, Methanol, Naphthalene, n-Hexane, Nickel, Sulfuric Acid, Tetrachloroethylene, Toluene, Xylenes, and Zinc.

Initial refined modeling results demonstrated compliance with the Ambient Air Standards (AAS) for Ammonia. Additional refined modeling was conducted for Benzene and the results demonstrated compliance.

AIR PERMIT BRIEFING SHEET
AIR PERMITS DIVISION
LOUISIANA DEPARTMENT OF ENVIRONMENTAL QUALITY

GARYVILLE MAJOR EXPANSION, LOUISIANA REFINING DIVISION
AGENCY INTEREST NO. 3165
MARATHON PETROLEUM COMPANY LLC
GARYVILLE, ST. JOHN THE BAPTIST PARISH, LOUISIANA

Dispersion Model(s) Used: ISCST3 Version 02035

Pollutant	Time Period	Adjusted Pollutant Concentration	Louisiana Air Quality Standard (AAS)
Ammonia	8-Hour	106.90 ug/m^3	640 ug/m^3
Benzene	Annual	11.14 ug/m^3*	12 ug/m^3

*Modeled concentration associated with an emission rate of 14.04 TPY as set forth in Permit No. 3039-V4. Benzene emissions associated with Permit No. 3039-V5 and this modification have declined substantially; therefore, LDEQ did not require the applicant to repeat modeling.

VIII. GENERAL CONDITION XVII ACTIVITIES

Activity	Frequency	Emissions				
		PM_{10}	SO_2	NO_X	CO	VOC
GME						
Sampling Activities	34 times/day					0.80
Replacement of C Canisters	One/month				-	0.12
Fire Training Emissions (Fluid Fuel Burning)	25 times/yr	0.10	1.57	0.55	0.05	0.01
Fire Training Emissions (Propane Burning)	25 times/yr	0.01	0.20	0.38	0.06	0.01
Equipment Cleaning Pad	One/day				-	0.07
Knock Out Drum Drainage	One/wk				-	0.13
Equipment Filters Replacement	One/month				-	0.29
Emissions from De-Coking Operations of Heaters	One/yr	<0.01	0.07	<0.01	<0.01	<0.01
MDEA Reclaiming	One/Yr					0.1
Catalyst Unloading	3/month	0.02			-	-
Catalyst Truck Loading	34-36 trucks/yr	0.05			-	-
Tank Gauging	One/day				-	0.14
Catalyst Changeouts – Coker Unit	Once/2-5 yrs	<0.01				

AIR PERMIT BRIEFING SHEET
AIR PERMITS DIVISION
LOUISIANA DEPARTMENT OF ENVIRONMENTAL QUALITY

GARYVILLE MAJOR EXPANSION, LOUISIANA REFINING DIVISION
AGENCY INTEREST NO. 3165
MARATHON PETROLEUM COMPANY LLC
GARYVILLE, ST. JOHN THE BAPTIST PARISH, LOUISIANA

Activity	Frequency	Emissions				
		PM_{10}	SO_2	NO_X	CO	VOC
Changing Filters-Coker Unit	18 events/yr					0.24
Equipment Cleaning-Coker Unit	3000 events/yr					0.92
Pipe Cleaning-Coker Unit	Twice/5 yrs					0.03
Strainer Cleaning-Coker Unit	416 events/yr					1.92
Compressor Maintenance-Coker Unit	Once/5 yrs					<0.01
Filter Replacement-Coker Unit	8 events/yr					0.02
Knock Out Drum Drainage-Coker Unit	Once/wk					0.03
Instrument Maintenance-Coker Unit	30 events/yr					0.03
Miscellaneous Equipment Preparation-Coker Unit	5 events/yr					0.54
Pipe Cleaning with Nitrogen-Coker Unit	Twice/5 yrs					<0.01
Opening Offline Vessels-Coker Unit	6 events/yr					1.28
Pump Maintenance-Coker Unit	10 events/yr					0.03
Solids Removal from Sumps-Coker Unit	Twice/5 yrs					<0.01
Valve Maintenance-Coker Unit	10 events/yr					<0.01
WWTP – Knockout Drum Drainage	One/wk					<0.01

AIR PERMIT BRIEFING SHEET
AIR PERMITS DIVISION
LOUISIANA DEPARTMENT OF ENVIRONMENTAL QUALITY

GARYVILLE MAJOR EXPANSION, LOUISIANA REFINING DIVISION
AGENCY INTEREST NO. 3165
MARATHON PETROLEUM COMPANY LLC
GARYVILLE, ST. JOHN THE BAPTIST PARISH, LOUISIANA

IX. INSIGNIFICANT ACTIVITIES

ID No.:	Description	Citation
GME		
-	Empty Drum Washing (Chemical and Lube Oil)	LAC 33:III.501.B.5.A.7
-	Lube Oil Drums (55 gal)	LAC 33:III.501.B.5.A.2
-	Mobil Arctic Turbine Oil (10,000 gal)	LAC 33:III.501.B.5.A.2
-	Merox Vent Catalyst, UOP Liquid Catalyst (10 gal)	LAC 33:III.501.B.5.A.4
-	Chem Tank 108 (150 gal)	LAC 33:III.501.B.5.A.2
-	DREW GARD 189C Inhibitor/Dispersant Treatment Tank (4,000 gal)	LAC 33:III.501.B.5.A.3
	DIOLTECH 424A Supplemental Dispersant/Antifoulant Tank (3,750 gal)	LAC 33:III.501.B.5.A.3
-	BIOSPERSE 254 Tank	LAC 33:III.501.B.5.A.3
-	DREWPLUS L 718 Antifoam Tank	LAC 33:III.501.B.5.A.3
-	DREWSPERSE 739 Leak Dispersant/Antifoulant Tank	LAC 33:III.501.B.5.A.3
-	PERFORMAX 406 Iron Contamination Dispersant Tank	LAC 33:III.501.B.5.A.3
-	Chem 500 Tank (200 gal)	LAC 33:III.501.B.5.A.2
-	Chem 108 Tank (3, 400 gal each)	LAC 33:III.501.B.5.A.3
-	MDEA Storage Tank	LAC 33:III.501.B.5.A.3
-	MDEA Sump	LAC 33:III.501.B.5.A.3
-	DREWCOR 2130 Neutralizing Amine Tank (500 gal)	LAC 33:III.501.B.5.A.3
-	Glycol Reservoir Tank (2,400 gal)	LAC 33:III.501.B.5.A.3
-	Chem 108 Tank (400 gal)	LAC 33:III.501.B.5.A.3
-	Filming Amine Mix Tank (MEA)	LAC 33:III.501.B.5.A.3
-	Perchloroethane, N_2 Blanket Tank (1,000 gal)	LAC 33:III.501.B.5.A.3
-	AMERSITE 2 Oxygen Scavenger Tank (1,900 gal)	LAC 33:III.501.B.5.A.3

AIR PERMIT BRIEFING SHEET
AIR PERMITS DIVISION
LOUISIANA DEPARTMENT OF ENVIRONMENTAL QUALITY

GARYVILLE MAJOR EXPANSION, LOUISIANA REFINING DIVISION
AGENCY INTEREST NO. 3165
MARATHON PETROLEUM COMPANY LLC
GARYVILLE, ST. JOHN THE BAPTIST PARISH, LOUISIANA

ID No.:	Description	Citation
-	ADVANTAGE PLUS 1400 Tank (1,900 gal)	LAC 33:III.501.B.5.A.3
-	DREWCOR 2130 Neutralizing Amine with Mekor Tank (1,000 gal)	LAC 33:III.501.B.5.A.3
-	AMERCOR 1848 FDA Approved Neutralizing Film Tank (1,000 gal)	LAC 33:III.501.B.5.A.2
-	AMERCOR 8703 Filming Amine Tank (1,000 gal)	LAC 33:III.501.B.5.A.2
-	STEAMFILM FG Food Grade Filming Amine Tank (1,900 gal)	LAC 33:III.501.B.5.A.2
-	Four Ammonia Storage Tanks (Pressurized)	LAC 33:III.501.B.5.A.3
-	Used Oil Tanks	LAC 33:III.501.B.5.A.3
-	Caustic Tank (1,000 gal)	LAC 33:III.501.B.5.A.4
-	Sulfuric acid Tanks (5,900 and 5,000 gals)	LAC 33:III.501.B.5.A.4
-	DREW GARD 315 Inhibitor Drums (55 gal)	LAC 33:III.501.B.5.A.3
-	FC-600 Light Water Band ATC/AFFF Drums (55 gal)	LAC 33:III.501.B.5.A.3
-	Chem. 6000 (300 gal)	LAC 33:III.501.B.5.A.3
-	Caustic Level Intermediate Makeup Tank	LAC 33:III.501.B.5.A.4
-	Recycle Caustic Tank (5,000 gal)	LAC 33:III.501.B.5.A.4
-	Spent Caustic Tanks (4)	LAC 33:III.501.B.5.A.4
-	25BE Caustic Tank (5,000 gal)	LAC 33:III.501.B.5.A.4
-	50% Caustic Tank (15,000 gal)	LAC 33:III.501.B.5.A.4
-	Acid Sump (Soda Ash is added to control pH)	LAC 33:III.501.B.5.A.4
-	Sulfite Mix Tank	LAC 33:III.501.B.5.A.4
-	Plant Mix Tank	LAC 33:III.501.B.5.A.4
-	10 Baume Caustic Tank	LAC 33:III.501.B.5.A.4
-	50 Baume Caustic Feed Tank (400 gal)	LAC 33:III.501.B.5.A.4
-	50 Baume Caustic Drum Tank (55 gal)	LAC 33:III.501.B.5.A.4
-	40% Lime Storage Tank (38,000 gal)	LAC 33:III.501.B.5.A.4
-	25% Lime Storage Tank (2,200 gal)	LAC 33:III.501.B.5.A.4

AIR PERMIT BRIEFING SHEET
AIR PERMITS DIVISION
LOUISIANA DEPARTMENT OF ENVIRONMENTAL QUALITY

GARYVILLE MAJOR EXPANSION, LOUISIANA REFINING DIVISION
AGENCY INTEREST NO. 3165
MARATHON PETROLEUM COMPANY LLC
GARYVILLE, ST. JOHN THE BAPTIST PARISH, LOUISIANA

ID No.:	Description	Citation
-	Monoethanolamine Tank (4,000 gal)	LAC 33:III.501.B.5.A.3
-	MDEA Sump	LAC 33:III.501.B.5.A.3
-	MEA Sump	LAC 33:III.501.B.5.A.3
-	Laboratory Equipment/Vents	LAC 33:III.501.B.5.A.6
-	Drum Washing Operations	LAC 33:III.501.B.5.A.7
-	Analyzer Vents	LAC 33:III.501.B.5.A.9
-	MDEA Storage Tank	LAC 33:III.501.B.5.A.3
-	Liquid Chlorine Tank (55 gal)	LAC 33:III.501.B.5.A.4
-	MEKOR 6701 Oxygen Scavenger/Inhibitor (50 gal)	LAC 33:III.501.B.5.A.3
-	DREWFLOC 2420 Polymer (55 gal)	LAC 33:III.501.B.5.A.3
-	DREWPLUS L 718 Antifoam (50 gal)	LAC 33:III.501.B.5.A.3
-	1115 LP Polymer Mix Day Tanks (2,300 gal)	LAC 33:III.501.B.5.A.3
-	Emulsifier/Degreaser Tank (300 gal)	LAC 33:III.501.B.5.A.3
-	93% Sulfuric Acid Tank (2,000 gal)	LAC 33:III.501.B.5.A.3
-	Cleaning Liquid Storage Tank (2)	LAC 33:III.501.B.5.A.3
-	Calcium Chloride Tank (5,000 gal)	LAC 33:III.501.B.5.A.4
-	LPG and Other Chemical Spheres (Pressurized)	LAC 33:III.501.B.5.A.3
-	LAB: Calibration Vents and Analyzer Vents	LAC 33:III.501.B.5.A.9
-	Sample Boil Away	LAC 33:III.501.B.5.A.6
-	Fire Water Pump Diesel Tank (300 gal)	LAC 33:III.501.B.5.A.3
-	Gas Fired Heater to Dry Refractory (<1 MM BTU/hr)	LAC 33:III.501.B.5.A.5
-	Emergency Generator Diesel Tanks (2, 6,000 gal)	LAC 33:III.501.B.5.A.3
-	UST Diesel (6,000 gal)	LAC 33:III.501.B.5.A.3
-	Diesel Storage Tank (612 gal)	LAC 33:III.501.B.5.A.3
-	Coker Quench Water Tank	LAC 33:III.501.B.5.A.3
-	Diesel Tank (3,000 gal)	LAC 33:III.501.B.5.A.3

STATE ONLY SPECIFIC CONDITIONS

LOUISIANA REFINING DIVISION, GARYVILLE MAJOR EXPANSION
AGENCY INTEREST NO. 3165
MARATHON PETROLEUM COMPANY LLC
GARYVILLE, ST. JOHN THE BAPTIST PARISH, LOUISIANA

The permit is issued under the following conditions:

1. Permittee shall comply with a streamlined equipment leaks monitoring program. Compliance with the streamlined program in accordance with this specific condition shall serve to comply with each of the fugitive emission monitoring programs being streamlined, as indicated in the following table. Noncompliance with the streamlined program in accordance with this specific condition may subject the permittee to enforcement action for one of the applicable fugitive emissions programs.

   a. Streamlined program shall be applicable to the combined universe of components subject to any of the programs being streamlined. Any component type which does not require periodic monitoring under the overall most stringent program shall be monitored as required by the most stringent requirements of any other program being streamlined and will not be exempted. The streamlined program will include any exemptions based on size or component available in any of the programs being streamlined.

   b. Leak definitions and monitoring frequency shall be used based on the overall most stringent program. Percent leaker performance shall be calculated using the provisions of the overall most stringent program. Annual monitoring shall define as once every four quarters. Some allowance may be made in the first year on the streamlined program in order to allow for transition from existing monitoring schedules.

   c. Permittee shall comply with recordkeeping and reporting requirements of the overall most stringent program. Semiannual reports shall be submitted on August 15 and February 15, to cover the periods from January 1 through June 30, and July 1 through December 31, respectively. The semiannual reports shall include any monitoring performed within the reporting period.

Unit or Plant Site	Programs Streamlined	Stream Applicability	Overall Most Stringent Program
GME Coker Unit and Fugitives Units 205, 205A	NSPS Subpart GGGa LAC 33:III.2121 LAC 33:III.Chapter 51 NESHAP Subpart CC	10% VOC 10% VOC 5% VOTAP 5% VOHAP	NSPS Subpart GGGa
GME Crude Vacuum Unit Fugitives Unit 210	NSPS Subpart GGGa LAC 33:III.2121 LAC 33:III.Chapter 51 NESHAP Subpart CC	10% VOC 10% VOC 5% VOTAP 5% VOHAP	NSPS Subpart GGGa

STATE ONLY SPECIFIC CONDITIONS

LOUISIANA REFINING DIVISION, GARYVILLE MAJOR EXPANSION
AGENCY INTEREST NO. 3165
MARATHON PETROLEUM COMPANY LLC
GARYVILLE, ST. JOHN THE BAPTIST PARISH, LOUISIANA

Unit or Plant Site	Programs Streamlined	Stream Applicability	Overall Most Stringent Program
GME Naphtha Hydrotreater Fugitives Unit 211	NSPS Subpart GGGa LAC 33:III.2121 LAC 33:III.Chapter 51 NESHAP Subpart CC	10% VOC 10% VOC 5% VOTAP 5% VOHAP	NSPS Subpart GGGa
GME Platforming Unit Fugitives Unit 212	NSPS Subpart GGGa LAC 33:III.2121 LAC 33:III.Chapter 51 NESHAP Subpart CC	10% VOC 10% VOC 5% VOTAP 5% VOHAP	NSPS Subpart GGGa
GME Platforming Unit (Perchloroethylene) Fugitives Unit 212A	NSPS Subpart GGGa LAC 33:III.2121 LAC 33:III.Chapter 51 NESHAP Subpart CC	10% VOC 10% VOC 5% VOTAP 5% VOHAP	NSPS Subpart GGGa
GME Kerosene Hydrotreater Fugitives Unit 214	NSPS Subpart GGGa LAC 33:III.2121	10% VOC 10% VOC	NSPS Subpart GGGa
GME Hydrocracker Fugitives Unit 215	NSPS Subpart GGGa LAC 33:III.2121 LAC 33:III.Chapter 51 NESHAP Subpart CC	10% VOC 10% VOC 5% VOTAP 5% VOHAP	NSPS Subpart GGGa
GME Sulfur Plant No. 1 Fugitives Unit 220	NSPS Subpart GGGa LAC 33:III.2121	5% VOTAP 10% VOC	NSPS Subpart GGGa
GME Tail Gas Amine Regeneration for SRU No. 1 Fugitives Unit 221	NSPS Subpart GGGa LAC 33:III.2121	10% VOC 10% VOC	NSPS Subpart GGGa
GME Saturates Gas Plant Fugitives Unit 222	NSPS Subpart GGGa LAC 33:III.2121 LAC 33:III.Chapter 51 NESHAP Subpart CC	10% VOC 10% VOC 5% VOTAP 5% VOHAP	NSPS Subpart GGGa
GME Sat Propane Merox Unit Fugitives Unit 222A	NSPS Subpart GGGa LAC 33:III.2121	10% VOC 10% VOC	NSPS Subpart GGGa
GME Sat Butane Merox Unit Fugitives Unit 222B	NSPS Subpart GGGa LAC 33:III.2121	10% VOC 10% VOC	NSPS Subpart GGGa

STATE ONLY SPECIFIC CONDITIONS

LOUISIANA REFINING DIVISION, GARYVILLE MAJOR EXPANSION
AGENCY INTEREST NO. 3165
MARATHON PETROLEUM COMPANY LLC
GARYVILLE, ST. JOHN THE BAPTIST PARISH, LOUISIANA

Unit or Plant Site	Programs Streamlined	Stream Applicability	Overall Most Stringent Program
GME Process Amine Regeneration Unit Fugitives Unit 232	NSPS Subpart GGGa LAC 33:III.2121	10% VOC 10% VOC	NSPS Subpart GGGa
New Sour Water Stripper Unit Fugitives – Coker Unit 233	NSPS Subpart GGGa LAC 33:III.2121	10% VOC 10% VOC	NSPS Subpart GGGa
GME Sulfur Recovery Plant No. 2 Fugitives Unit 234	NSPS Subpart GGGa LAC 33:III.2121	5% VOTAP 10% VOC	NSPS Subpart GGGa
GME Intermediate Product Fugitives Unit 241	NSPS Subpart GGGa LAC 33:III.2121 LAC 33:III.Chapter 51 NESHAP Subpart CC	10% VOC 10% VOC 5% VOTAP 5% VOHAP	NSPS Subpart GGGa
GME Fuel Gas System Fugitives Unit 243	NSPS Subpart GGGa LAC 33:III.2121	10% VOC 10% VOC	NSPS Subpart GGGa
New Amine Regenerator Unit Fugitives Unit 247	NSPS Subpart GGGa LAC 33:III.2121a	10% VOC 10% VOC	NSPS Subpart GGGa
GME Marine Dock No. 4 Fugitives Unit 250	NSPS Subpart GGGa LAC 33:III.2121 LAC 33:III.Chapter 51 NESHAP Subpart CC	10% VOC 10% VOC 5% VOTAP 5% VOHAP	NSPS Subpart GGGa
GME Marine Vapor Combustor Fugitives Unit 250A	NSPS Subpart GGGa LAC 33:III.2121 LAC 33:III.Chapter 51 NESHAP Subpart CC	10% VOC 10% VOC 5% VOTAP 5% VOHAP	NSPS Subpart GGGa
GME Flare Knock Out Drum Fugitives Unit 259	NSPS Subpart GGGa LAC 33:III.2121 LAC 33:III.Chapter 51 NESHAP Subpart CC	10% VOC 10% VOC 5% VOTAP 5% VOHAP	NSPS Subpart GGGa
GME WWTP Fugitives Unit 260	NSPS Subpart GGGa LAC 33:III.2121	10% VOC 10% VOC	NSPS Subpart GGGa
GME Intercom Pipeway Fugitives Unit 263	NSPS Subpart GGGa LAC 33:III.2121 LAC 33:III.Chapter 51 NESHAP Subpart CC	10% VOC 10% VOC 5% VOTAP 5% VOHAP	NSPS Subpart GGGa

STATE ONLY SPECIFIC CONDITIONS

LOUISIANA REFINING DIVISION, GARYVILLE MAJOR EXPANSION
AGENCY INTEREST NO. 3165
MARATHON PETROLEUM COMPANY LLC
GARYVILLE, ST. JOHN THE BAPTIST PARISH, LOUISIANA

Unit or Plant Site	Programs Streamlined	Stream Applicability	Overall Most Stringent Program
GME Truck Loading Rack Fugitives Unit 265	NSPS Subpart GGGa LAC 33:III.2121	10% VOC 10% VOC	NSPS Subpart GGGa
GME Blending Facilities Fugitives Unit 267	NSPS Subpart GGGa LAC 33:III.2121 LAC 33:III.Chapter 51 NESHAP Subpart CC	10% VOC 10% VOC 5% VOTAP 5% VOHAP	NSPS Subpart GGGa
GME Marine Dock No. 3 Fugitives Unit 271	NSPS Subpart GGGa LAC 33:III.2121 LAC 33:III.Chapter 51 NESHAP Subpart CC	10% VOC 10% VOC 5% VOTAP 5% VOHAP	NSPS Subpart GGGa

2. Permittee shall measure the concentrations at the four designated monitoring locations (A, B, C, and D) around the proposed GME area. The concentrations will be monitored for $PM_{2.5}$, SO_2, H_2S, Benzene, Toluene, Xylene (m, p, and o), and n-Hexane continuously; and Total VOCs, LTAPs, and Biphenyl weekly. The results shall be reported to the Office of Compliance, Surveillance Division, within 45 days of the end of previous calendar quarter.

LOUISIANA DEPARTMENT OF ENVIRONMENTAL QUALITY

LOUISIANA REFINING DIVISION, GARYVILLE MAJOR EXPANSION
AGENCY INTEREST NO. 3165
MARATHON PETROLEUM COMPANY LLC
GARYVILLE, ST. JOHN THE BAPTIST PARISH, LOUISIANA

X. Applicable Louisiana and Federal Air Quality Requirements

ID No.:	Description	LAC 33:III.Chapter																	
		5	9	11	13	15	2103	2104	2107	2111	2115	2121	22	2301	29*	51*	52	56	59
UNF002	GME Facility	1	1	1	1	1						1				1		1	1
EQT185	1-08, GME A Crude Heater			1	1	1										2			
EQT186	2-08, GME B Crude Heater			1	1	1										2			
EQT187	3-08, GME A Vacuum Tower Heater			1	1	1										2			
EQT188	4-08, GME B Vacuum Tower Heater			1	1	1										2			
EQT189	5-08, GME Naphtha Hydrotreater Reactor Charge Heater			1	1	1										2			
EQT190	6-08, Naphtha Hydrotreater Stripper Reboiler Heater			1	1	1										2			
EQT191	7A-08, GME Platformer Cell Heater No. 1			1	1	1										2			
EQT192	7B-08, GME Platformer Cell Heater No. 2			1	1	1										2			
EQT193	7C-08, GME Platformer Heater Cell No. 3			1	1	1										2			
EQT195	9-08, GME KHT Reactor Charge Heater			1	1	1										2			
EQT196	10-08, GME KHT Stripper Reboiler Heater			1	1	1										2			
EQT197	11-08, GME HCU Train 1 Reactor Charge Heater			1	1	1										2			
EQT198	12-08, GME HCU Train 2 Reactor Charge Heater			1	1	1										2			
EQT199	13-08, GME HCU Fractionator Heater			1	1	1										2			

LOUISIANA DEPARTMENT OF ENVIRONMENTAL QUALITY

LOUISIANA REFINING DIVISION, GARYVILLE MAJOR EXPANSION
AGENCY INTEREST NO. 3165
MARATHON PETROLEUM COMPANY LLC
GARYVILLE, ST. JOHN THE BAPTIST PARISH, LOUISIANA

X. Applicable Louisiana and Federal Air Quality Requirements

ID No.:	Description	LAC 33:III.Chapter																	
		5	9	11	13	15	2103	2104	2107	2111	2115	2121	22	2301	29*	51*	52	56	59
EQT201	15-08, GME Coker Charge Heater			1	1	1					2					2			
EQT202	16-08, GME Boiler No. 1			1	1	1										2			
EQT204	18-08, GME Thermal Oxidizer No. 1			1	1	1										1			
EQT205	19-08, GME Thermal Oxidizer No. 2			1	1	1										1			
EQT208	21-08, GME Emergency Generator (Dock)			1	1	1													
EQT209	22-08, GME Emergency Generator (Tank Farm)			1	1	1													
EQT210	23-08, GME Platformer Regenerator Vent																		
EQT211	24-08, GME Cooling Tower No. 1																		
EQT212	31-08, GME Coke Stockpile				1														
EQT213	32-08, GME Cooling Tower No. 2																		
EQT214	33A-08, GME A Coker Drum Vent															1			
EQT215	33B-08, GME B Coker Drum Vent															1			
EQT247	1-07, Gasoline Tank						1												
EQT248	2-07, Gasoline Tank						1												
EQT282	20A-08, GME North Flare			1	1	1										1			
EQT284	20B-08, GME South Flare			1	1	1										1			
EQT285	20A-08 SU/SD, GME North Flare Startup/Shutdown Emissions																		

LOUISIANA DEPARTMENT OF ENVIRONMENTAL QUALITY

LOUISIANA REFINING DIVISION, GARYVILLE MAJOR EXPANSION
AGENCY INTEREST NO. 3165
MARATHON PETROLEUM COMPANY LLC
GARYVILLE, ST. JOHN THE BAPTIST PARISH, LOUISIANA

X. Applicable Louisiana and Federal Air Quality Requirements

ID No.:	Description	LAC 33:III.Chapter																	
		5	9	11	13	15	2103	2104	2107	2111	2115	2121	22	2301	29*	51*	52	56	59
EQT286	20B-08 SU/SD, GME South Flare Startup/Shutdown Emissions																		
FUG053	Unit 205 Fug., GME Delayed Coker Unit Fugitives									1		1				1			
FUG054	Unit 205A Fug., GME Coker Gas Plant Fugitives									1		1				1			
FUG055	Unit 210 Fug., GME Crude/Vacuum Distillation Unit Fugitives									1		1				1			
FUG056	Unit 211 Fug., GME Naphtha Hydrotreater Unit Fugitives									1		1				1			
FUG057	Unit 212 Fug., GME CCR Platformer Unit Fugitives									1		1				1			
FUG058	Unit 212A Fug., GME Platformer Unit (Perchloroethylene) Fugitives									1		1				1			
FUG059	Unit 214 Fug., GME Kerosene Hydrotreater Unit Fugitives									1		1				1			
FUG060	Unit 215 Fug., GME Hydrocracker Fugitives									1		1				1			
FUG061	Unit 220 Fug., GME Sulfur Recovery Plant No. 1 Fugitives															1			
FUG062	Unit 221 Fug., GME Tail Gas Amine Regeneration for SRU No. 1 Fugitives									1		1							
FUG063	Unit 222 Fug., GME Saturates Gas Plant Fugitives									1		1				1			

LOUISIANA DEPARTMENT OF ENVIRONMENTAL QUALITY

LOUISIANA REFINING DIVISION, GARYVILLE MAJOR EXPANSION
AGENCY INTEREST NO. 3165
MARATHON PETROLEUM COMPANY LLC
GARYVILLE, ST. JOHN THE BAPTIST PARISH, LOUISIANA

X. Applicable Louisiana and Federal Air Quality Requirements

ID No.:	Description	LAC 33:III.Chapter																	
		5	9	11	13	15	2103	2104	2107	2111	2115	2121	22	2301	29*	51*	52	56	59
FUG064	Unit 222A Fug., GME Sat Propane Merox Unit Fugitives									1		1							
FUG0065	Unit 222B Fug., GME Sat Butane Merox Unit Fugitives									1		1							
FUG066	Unit 232 Fug., GME Tail Gas Amine Regeneration for SRU No. 2 Fugitives									1		1							
FUG067	Unit 233 Fug., GME Sour Water Stripper Unit Fugitives									1		1							
FUG068	Unit 234 Fug., GME Sulfur Recovery Plant No. 2 Fugitives															1			
FUG069	Unit 241 Fug., GME Intermediate Product Unit Fugitives									1		1				1			
FUG070	Unit 243 Fug., GME Fuel Gas Treater Unit Fugitives									1		1							
FUG071	Unit 247 Fug., GME Amine Regeneration Unit Fugitives										1	1							
FUG072	Unit 250 Fug., GME Marine Loading Dock No. 4 Unit Fugitives										1	1				1			
FUG073	Unit 250A Fug., GME Marine Vapor Combustor Fugitives										1	1				1			
FUG074	Unit 259 Fug., GME Flare System Fugitives										1	1				1			
FUG075	Unit 260 Fug., GME Wastewater Treatment Plant Train No. 5 Fugitives										1	1							

LOUISIANA DEPARTMENT OF ENVIRONMENTAL QUALITY

LOUISIANA REFINING DIVISION, GARYVILLE MAJOR EXPANSION
AGENCY INTEREST NO. 3165
MARATHON PETROLEUM COMPANY LLC
GARYVILLE, ST. JOHN THE BAPTIST PARISH, LOUISIANA

X. Applicable Louisiana and Federal Air Quality Requirements

ID No.:	Description	LAC 33:III.Chapter																	
		5	9	11	13	15	2103	2104	2107	2111	2115	2121	22	2301	29*	51*	52	56	59
FUG076	Unit 263 Fug., GME Interconnecting Pipeway Fugitives										1	1				1			
FUG077	Unit 265 Fug., GME Truck Rack Fugitives									1	1	1							
FUG078	Unit 267 Fug., GME Blending Facilities Fugitives										1	1				1			
FUG079	Unit 271 Fug., GME Barge Dock No. 3 Unit Fugitives										1	1				1			

KEY TO MATRIX

1 -The regulations have applicable requirements which apply to this particular emission source.
-The emission source may have an exemption from control stated in the regulation. The emission source may not have to be controlled but may have monitoring, recordkeeping, or reporting requirements.

2 -The regulations have applicable requirements which apply to this particular emission source but the source is currently exempt from these requirements due to meeting a specific criterion, such as it has not been constructed, modified or reconstructed since the regulations have been in place. If the specific criteria changes the source will have to comply at a future date.

3 -The regulations apply to this general type of emission source (i.e. vents, furnaces, and fugitives) but do not apply to this particular emission source.

Blank – The regulations clearly do not apply to this type of emission source.

* The regulations indicated above are State Only regulations.

▲ All LAC 33:III.Chapter 5 citations are federally enforceable including LAC 33:III.501.C.6 citations, except when the requirement found in the "Specific Requirements" report specifically states that the regulation is State Only.

LOUISIANA DEPARTMENT OF ENVIRONMENTAL QUALITY

LOUISIANA REFINING DIVISION, GARYVILLE MAJOR EXPANSION
AGENCY INTEREST NO. 3165
MARATHON PETROLEUM COMPANY LLC
GARYVILLE, ST. JOHN THE BAPTIST PARISH, LOUISIANA

X. Applicable Louisiana and Federal Air Quality Requirements

ID No.:	Description	40 CFR 60 NSPS							40 CFR 61				40 CFR 63 NESHAP							40 CFR			
		A	Db	3Ga	3Qs	J/Ja	Kb	3N/3R	A	M	V/Y	FF	A	F	G	CC	Q	3U	H	52	64	68	82
UNF002	GME Facility	1	1	1	1	1		1/1	1			1	1	1	1	1	1	1	1	1		1	1
EQT185	1-08, GME A Crude Heater					1/2														1			
EQT186	2-08, GME B Crude Heater					1/2														1			
EQT187	3-08, GME A Vacuum Tower Heater					1/2														1			
EQT188	4-08, GME B Vacuum Tower Heater					1/2														1			
EQT189	5-08, GME Naphtha Hydrotreater Reactor Charge Heater					1/2														1			
EQT190	6-08, Naphtha Hydrotreater Stripper Reboiler Heater					1/2														1			
EQT191	7A-08, GME Platformer Cell Heater No. 1					1/2														1			
EQT192	7B-08, GME Platformer Cell Heater No. 2					1/2														1			
EQT193	7C-08, GME Platformer Heater Cell No. 3					1/2														1			
EQT195	9-08, GME KHT Reactor Charge Heater					-/1														1			
EQT196	10-08, GME KHT Stripper Reboiler Heater					-/1														1			
EQT197	11-08, GME HCU Train 1 Reactor Charge Heater					1/2														1			
EQT198	12-08, GME HCU Train 2 Reactor Charge Heater					1/2														1			
EQT199	13-08, GME HCU Fractionator Heater					1/2														1			
EQT201	15-08, GME Coker Charge Heater					-/1														1			
EQT202	16-08, GME Boiler No. 1		1			-/1														1			

LOUISIANA DEPARTMENT OF ENVIRONMENTAL QUALITY

LOUISIANA REFINING DIVISION, GARYVILLE MAJOR EXPANSION
AGENCY INTEREST NO. 3165
MARATHON PETROLEUM COMPANY LLC
GARYVILLE, ST. JOHN THE BAPTIST PARISH, LOUISIANA

X. Applicable Louisiana and Federal Air Quality Requirements

ID No.:	Description	40 CFR 60 NSPS							40 CFR 61				40 CFR 63 NESHAP							40 CFR			
		A	Db	3Ga	3Qs	J/Ja	Kb	3N/3R	A	M	V/Y	FF	A	F	G	CC	Q	3U	H	52	64	68	82
EQT204	18-08, GME Thermal Oxidizer No. 1					-/1												1		1			
EQT205	19-08, GME Thermal Oxidizer No. 2					-/1												1		1			
EQT208	21-08, GME Emergency Generator (Dock)																	1		1			
EQT209	22-08, GME Emergency Generator (Tank Farm)																			1			
EQT210	23-08, GME Platformer Regenerator Vent																	1		1			
EQT211	24-08, GME Cooling Tower No. 1													1			2			1			
EQT212	31-08, GME Coke Stockpile																			1			
EQT213	32-08, GME Cooling Tower No. 2													1			2			1			
EQT214	33A-08, GME A Coker Drum Vent					-/2										1							
EQT215	33B-08, GME B Coker Drum Vent					-/2										1							
EQT247	1-07, Gasoline Storage Tank						2																
EQT248	2-07, Gasoline Storage Tank						2																
EQT282	20A-08, GME North Flare					1/2																	
EQT284	20B-08, GME South Flare					1/2																	
EQT285	20A-08 SU/SD, GME North Flare Startup/Shutdown Emissions																						
EQT286	20B-08 SU/SD, GME South Flare Startup/Shutdown Emissions																						
FUG053	Unit 205 Fug., GME Delayed Coker Unit Fugitives			1												1							
FUG054	Unit 205A Fug., GME Coker Gas Plant Fugitives			1												1							

LOUISIANA DEPARTMENT OF ENVIRONMENTAL QUALITY

LOUISIANA REFINING DIVISION, GARYVILLE MAJOR EXPANSION
AGENCY INTEREST NO. 3165
MARATHON PETROLEUM COMPANY LLC
GARYVILLE, ST. JOHN THE BAPTIST PARISH, LOUISIANA

X. Applicable Louisiana and Federal Air Quality Requirements

ID No.:	Description	40 CFR 60 NSPS							40 CFR 61				40 CFR 63 NESHAP							40 CFR			
		A	Db	3Ga	3Qs	J/Ja	Kb	3N/3R	A	M	V/Y	FF	A	F	G	CC	Q	3U	H	52	64	68	82
FUG055	Unit 210 Fug., GME Crude/Vacuum Distillation Unit Fugitives			1												1							
FUG056	Unit 211 Fug., GME Naphtha Hydrotreater Unit Fugitives			1												1							
FUG057	Unit 212 Fug., GME CCR Platformer Unit Fugitives			1												1							
FUG058	Unit 212A Fug., GME Platformer Unit (Perchloroethylene) Fugitives			1												1							
FUG059	Unit 214 Fug., GME Kerosene Hydrotreater Unit Fugitives			1																			
FUG060	Unit 215 Fug., GME Hydrocracker Fugitives			1												1							
FUG061	Unit 220 Fug., GME Sulfur Recovery Plant No. 1 Fugitives			1																			
FUG062	Unit 221 Fug., GME Tail Gas Amine Regeneration for SRU No. 1 Fugitives			1																			
FUG063	Unit 222 Fug., GME Saturates Gas Plant Fugitives			1												1							
FUG064	Unit 222A Fug., GME Sat Propane Merox Unit Fugitives			1																			
FUG0065	Unit 222B Fug., GME Sat Butane Merox Unit Fugitives			1																			
FUG066	Unit 232 Fug., GME Tail Gas Amine Regeneration for SRU No. 2 Fugitives			1																			
FUG067	Unit 233 Fug., GME Sour Water Stripper Unit Fugitives			1																			

LOUISIANA DEPARTMENT OF ENVIRONMENTAL QUALITY

LOUISIANA REFINING DIVISION, GARYVILLE MAJOR EXPANSION
AGENCY INTEREST NO. 3165
MARATHON PETROLEUM COMPANY LLC
GARYVILLE, ST. JOHN THE BAPTIST PARISH, LOUISIANA

X. Applicable Louisiana and Federal Air Quality Requirements

ID No.:	Description	40 CFR 60 NSPS							40 CFR 61				40 CFR 63 NESHAP							40 CFR			
		A	Db	3Ga	3Qs	J/Ja	Kb	3N/3R	A	M	V/Y	FF	A	F	G	CC	Q	3U	H	52	64	68	82
FUG068	Unit 234 Fug., GME Sulfur Recovery Plant No. 2 Fugitives			1																			
FUG069	Unit 241 Fug., GME Intermediate Product Unit Fugitives			1												1							
FUG070	Unit 243 Fug., GME Fuel Gas Treater Unit Fugitives			1																			
FUG071	Unit 247 Fug., GME Amine Regeneration Unit Fugitives			1																			
FUG072	Unit 250 Fug., GME Marine Loading Dock No. 4 Unit Fugitives			1												1							
FUG073	Unit 250A Fug., GME Marine Vapor Combustor Fugitives			1												1							
FUG074	Unit 259 Fug., GME Flare System Fugitives			1												1							
FUG075	Unit 260 Fug., GME Wastewater Treatment Plant Train No. 5 Fugitives			1																			
FUG076	Unit 263 Fug., GME Interconnecting Pipeway Fugitives			1												1							
FUG077	Unit 265 Fug., GME Truck Rack Fugitives																						
FUG078	Unit 267 Fug., GME Blending Facilities Fugitives			1												1							
FUG079	Unit 271 Fug., GME Barge Dock No. 3 Unit Fugitives			1												1							

LOUISIANA DEPARTMENT OF ENVIRONMENTAL QUALITY

LOUISIANA REFINING DIVISION, GARYVILLE MAJOR EXPANSION
AGENCY INTEREST NO. 3165
MARATHON PETROLEUM COMPANY LLC
GARYVILLE, ST. JOHN THE BAPTIST PARISH, LOUISIANA

X. Applicable Louisiana and Federal Air Quality Requirements

ID No.:	Description	40 CFR 60 NSPS							40 CFR 61				40 CFR 63 NESHAP							40 CFR			
		A	Db	3Ga	3Qs	J/Ja	Kb	3N/3R	A	M	V/Y	FF	A	F	G	CC	Q	3U	H	52	64	68	82

KEY TO MATRIX

1 -The regulations have applicable requirements which apply to this particular emission source.
-The emission source may have an exemption from control stated in the regulation. The emission source may not have to be controlled but may have monitoring, recordkeeping, or reporting requirements.

2 -The regulations have applicable requirements which apply to this particular emission source but the source is currently exempt from these requirements due to meeting a specific criterion, such as it has not been constructed, modified or reconstructed since the regulations have been in place. If the specific criteria changes the source will have to comply at a future date.

3 -The regulations apply to this general type of emission source (i.e. vents, furnaces, and fugitives) but do not apply to this particular emission source.

Blank – The regulations clearly do not apply to this type of emission source.

LOUISIANA DEPARTMENT OF ENVIRONMENTAL QUALITY

LOUISIANA REFINING DIVISION, GARYVILLE MAJOR EXPANSION
AGENCY INTEREST NO. 3165
MARATHON PETROLEUM COMPANY LLC
GARYVILLE, ST. JOHN THE BAPTIST PARISH, LOUISIANA

XI. Explanation for Exemption Status or Non-Applicability of a Source

ID No:	Requirement	Status	Citation	Explanation
EQT185-193, and 197 thru 199, 206, 214, and 215 1-08 thru 6-08, 7A-08 thru 7C-08, and 11-08 thru 13-08, 20A-08, 20B-08, 33A-08, and 33B-08 Heaters	NSPS, Subpart Ja – Standards of Performance for Petroleum Refineries	Does not apply	40 CFR 60.100a	Based on date of construction
EQT185-199, and 202 1-08 thru 13-08, and 16-08 GME Heaters, Reboilers and Boiler	Comprehensive Toxic Air Pollutant Emission Control Program LAC 33:III.Chapter 51 – State Only	Exempt	LAC 33:III.5105.B.3.c	Gas streams with heating value greater than 7000 BTU/lb and are generated on site (fuel gas system)
EQT201 15-08 GME Coker Charge Heater	Control of Organic Compounds – Waste Gas Disposal	Exempt	LAC 33:III.2115	Complies with federal requirement NESHAP, 40 CFR 63, Subpart CC
EQT211 and 213 24-08 and 32-08, GME Cooling Towers No. 1 and 2	NESHAP, Subpart Q - Cooling Water Tower Fugitives	Exempt	40 CFR 63.400	Does not use chromium containing corrosion inhibitors
EQT247 and 248 1-07 and 2-07 Gasoline Tank	NSPS, Subpart Kb – VOL Storage Vessels	Does not apply	40 CFR 60.110b(a)	Based on capacity

The above table provides explanation for both the exemption status or non-applicability of a source cited by 2 or 3 in the matrix presented in Section X of this permit

Gener... ormation

AI ID: 3165 Marathon Petroleum Co LLC - LA Refining Division - Garyville Refinery
Activity Number: PER20090017
Permit Number: 3039-V6
Air - Title V Regular Permit Minor Mod

Also Known As:

ID	Name	User Group	Start Date
2580-00013	CDS Number	CDS Number	06-25-1999
25-1410539	Federal Tax ID	Federal Tax ID	11-21-1999
LAD081999724	Marathon Ashland Petroleum LLC	Hazardous Waste Notification	01-12-1999
PMT/PC/CA	GPRA Baselines	Hazardous Waste Permitting	10-01-1997
LA0045683	LPDES #	LPDES Permit #	05-22-2003
LAR10C457	LPDES #	LPDES Permit #	08-08-2004
LAR10D879	LPDES #	LPDES Permit #	03-01-2007
WP0399	LWDPS #	LWDPS Permit #	06-25-2003
	Priority 1 Emergency Site	Priority 1 Emergency Site	07-18-2006
LA-3239-L01A	Radioactive Material License	Radiation License Number	07-30-2003
7408	X-Ray Registration Number	Radiation X-ray Registration Number	11-21-1999
GD-095-0981	SW Generator ID #	Solid Waste Facility No.	04-30-2001
19415	Marathon Ashland Petroleum Co - Garyville Refinery	TEMPO Merge	04-01-2002
22003	Marathon Ashland Petroleum LLC	TEMPO Merge	04-16-2002
36580	Marathon Ashland Petroleum LLC - LA Refining Division	TEMPO Merge	12-09-2001
38855	Marathon Ashland Petroleum LLC	TEMPO Merge	04-16-2002
45582	Marathon Oil Garyville Refinery	TEMPO Merge	04-16-2002
72691	Louisiana Refining Division	TEMPO Merge	04-07-2002
70051MRTHNHWY61	TRI #	Toxic Release Inventory	07-29-2004
1577	UST Case History Case Number	UST Case Number	11-21-1999
48006222	UST Facility ID (from UST legacy data)	UST FID #	10-12-2002
48014943	UST Facility ID Number	UST FID #	05-27-1993
14661	Waste Tires	Waste Tire Facility ID Number	11-13-2008
WQC DH 070308-06	Water Quality Certification #	Water Certification	03-08-2007

Physical Location: 4663 W Airline Hwy
Hwy 61 @ Marathon Ave
Garyville, LA 70051

Main FAX: 9855357177
Main Phone: 9855352241

Mailing Address: PO Box AC
Garyville, LA 70051

Location of Front Gate: 30.061322 latitude, -90.593528 longitude, Coordinate Method: Lat.\Long. - DMS, Coordinate Datum: NAD83

Related People:

Name	Mailing Address	Phone (Type)	Relationship
Richard Bedell	PO Box AC Garyville, LA 70051	9855352241 (WP)	Responsible Official for

TPOR0148

General Information

AI ID: 3165 Marathon Petroleum Co LLC - LA Refining Division - Garyville Refinery
Activity Number: PER20090017
Permit Number: 3039-V6
Air - Title V Regular Permit Minor Mod

Related People:

Name	Mailing Address	Phone (Type)	Relationship
Richard Bedell	PO Box AC Garyville, LA 70051	rbedell@marathonpe	Responsible Official for
Jason Bradford	PO Box AC Garyville, LA 70051	jbradford@marathon	Emission Inventory Contact for
Jason Bradford	PO Box AC Garyville, LA 70051	9855357353 (WP)	Emission Inventory Contact for
Ryan Cole	PO Box AC Garyville, LA 70051	9855357723 (WP)	Water Billing Party for
Ryan Cole	PO Box AC Garyville, LA 70051	9855357723 (WP)	Solid Waste Billing Party for
Wally Dows	PO Box AC Garyville, LA 70051	9855357177 (WF)	Accident Prevention Billing Party for
Wally Dows	PO Box AC Garyville, LA 70051	9855352241 (WP)	Accident Prevention Billing Party for
Wally Dows	PO Box AC Garyville, LA 70051	9855357177 (WF)	Accident Prevention Contact for
Wally Dows	PO Box AC Garyville, LA 70051	9855352241 (WP)	Accident Prevention Contact for
C. Blake Harmon		5045352241 (WP)	Underground Storage Tank Contact for
Robert Harris	PO Box AC Garyville, LA 70051	9855352241 (WP)	Waste Tires Contact for
Robert Harris	PO Box AC Garyville, LA 70051	9855352241 (WP)	Solid Waste Billing Party for
Robert Harris	PO Box AC Garyville, LA 70051	9855352241 (WP)	Underground Storage Tank Contact for
Charles Whitman	PO Box AC Garyville, LA 70051	9855357235 (WF)	Radiation License Billing Party for
Charles Whitman	PO Box AC Garyville, LA 70051	9855357302 (WP)	Radiation Registration Billing Party for
Charles Whitman	PO Box AC Garyville, LA 70051	5044735520 (CP)	Radiation License Billing Party for
Charles Whitman	PO Box AC Garyville, LA 70051	CEWHITMAN@MAF	Radiation License Billing Party for
Charles Whitman	PO Box AC Garyville, LA 70051	9855357235 (WF)	Radiation Registration Billing Party for
Charles Whitman	PO Box AC Garyville, LA 70051	CEWHITMAN@MAF	Radiation Contact For
Charles Whitman	PO Box AC Garyville, LA 70051	5044735520 (CP)	Radiation Contact For
Charles Whitman	PO Box AC Garyville, LA 70051	9855357302 (WP)	Radiation Contact For
Charles Whitman	PO Box AC Garyville, LA 70051	9855357235 (WF)	Radiation Contact For
Charles Whitman	PO Box AC Garyville, LA 70051	CEWHITMAN@MAF	Radiation Safety Officer for
Charles Whitman	PO Box AC Garyville, LA 70051	5044735520 (CP)	Radiation Safety Officer for
Charles Whitman	PO Box AC Garyville, LA 70051	9855357302 (WP)	Radiation Safety Officer for
Charles Whitman	PO Box AC Garyville, LA 70051	9855357235 (WF)	Radiation Safety Officer for
Charles Whitman	PO Box AC Garyville, LA 70051	CEWHITMAN@MAF	Radiation Registration Billing Party for
Charles Whitman	PO Box AC Garyville, LA 70051	5044735520 (CP)	Radiation Registration Billing Party for
Charles Whitman	PO Box AC Garyville, LA 70051	9855357302 (WP)	Radiation License Billing Party for

Related Organizations:

Name	Address	Phone (Type)	Relationship
Marathon Petroleum Co LLC	PO Box AC Garyville, LA 70051	9855357888 (WP)	Employed by
Marathon Petroleum Co LLC	PO Box AC Garyville, LA 70051	9855357888 (WP)	Operates
Marathon Petroleum Co LLC	PO Box AC Garyville, LA 70051	9855357888 (WP)	Emission Inventory Billing Party
Marathon Petroleum Co LLC	PO Box AC Garyville, LA 70051	9855357888 (WP)	Air Billing Party for
Marathon Petroleum Co LLC	PO Box AC Garyville, LA 70051	9855357888 (WP)	UST Billing Party for

General Information

AI ID: 3165 Marathon Petroleum Co LLC - LA Refining Division - Garyville Refinery
Activity Number: PER20090017
Permit Number: 3039-V6
Air - Title V Regular Permit Minor Mod

Related Organizations:

Name	Address	Phone (Type)	Relationship
Marathon Petroleum Co LLC	PO Box AC Garyville, LA 70051	9855357888 (WP)	Owns

NAIC Codes: 32411, Petroleum Refineries

Note: This report entitled "General Information" contains a summary of facility-level information contained in LDEQ's TEMPO database for this facility and is not considered a part of the permit. Please review the information contained in this document for accuracy and completeness. If any changes are required or if you have questions regarding this document, you may contact Ms. Tommie Milam, Permit Support Services Division, at (225) 219-3259 or email your changes to facupdate@la.gov.

INVENTORIES

AI ID: 3165 - Marathon Petroleum Co LLC - LA Refining Division - Garyville Refinery
Activity Number: PER20090017
Permit Number: 3039-V6
Air - Title V Regular Permit Minor Mod

Subject Item Inventory:

ID	Description	Tank Volume	Max. Operating Rate	Normal Operating Rate	Contents	Operating Time
GME Facility						
EQT 0185	1-08 - GME A Crude Heater		368.4 MM BTU/hr	294.72 MM BTU/hr	ULNB and SCR, CAP	8760 hr/yr
EQT 0186	2-08 - GME B Crude Heater		368.4 MM BTU/hr	294.72 MM BTU/hr	ULNB and SCR, CAP	8760 hr/yr
EQT 0187	3-08 - GME A Vacuum Tower Heater		155.19 MM BTU/hr	124.15 MM BTU/hr	ULNB and SCR, CAP	8760 hr/yr
EQT 0188	4-08 - GME B Vacuum Tower Heater		155.19 MM BTU/hr	124.15 MM BTU/hr	ULNB and SCR, CAP	8760 hr/yr
EQT 0189	5-08 - GME Naphtha Hydrotreater Reactor Charge Heater		61.84 MM BTU/hr	49.47 MM BTU/hr	ULNB, CAP	8760 hr/yr
EQT 0190	6-08 - GME Naphtha Hydrotreater Stripper Reboiler Heater		71.5 MM BTU/hr	57.2 MM BTU/hr	ULNB, CAP	8760 hr/yr
EQT 0191	7A-08 - GME Platformer Heater Cell No. 1		473.97 MM BTU/hr	379.18 MM BTU/hr	ULNB, CAP	8760 hr/yr
EQT 0192	7B-08 - GME Platformer Heater Cell No. 2		542.38 MM BTU/hr	433.9 MM BTU/hr	ULNB, CAP	8760 hr/yr
EQT 0193	7C-08 - GME Platformer Heater Cell No. 3		333.77 MM BTU/hr	267.02 MM BTU/hr	ULNB, CAP	8760 hr/yr
EQT 0195	9-08 - GME KHT Reacter Charge Heater		73.84 MM BTU/hr	59.07 MM BTU/hr	ULNB, CAP	8760 hr/yr
EQT 0196	10-08 - GME KHT Stripper Reboiler Heater		121.81 MM BTU/hr	97.45 MM BTU/hr	ULNB, CAP	8760 hr/yr
EQT 0197	11-08 - GME HCU Train 1 Reactor Charge Heater		85.05 MM BTU/hr	68.04 MM BTU/hr	ULNB, CAP	8760 hr/yr
EQT 0198	12-08 - GME HCU Train 2 Reactor Charge Heater		85.05 MM BTU/hr	68.04 MM BTU/hr	ULNB, CAP	8760 hr/yr
EQT 0199	13-08 - GME HCU Fractionator Heater		361.26 MM BTU/hr	289.01 MM BTU/hr	ULNB, CAP	8760 hr/yr
EQT 0201	15-08 - GME Coker Charge Heater		451.11 MM BTU/hr	360.89 MM BTU/hr	ULNB and SCR, CAP	8760 hr/yr
EQT 0202	16-08 - GME Boiler No. 1		525.73 MM BTU/hr	420.59 MM BTU/hr	CAP	8760 hr/yr
EQT 0204	18-08 - GME Thermal Oxidizer No. 1		63.7 MM BTU/hr	50.98 MM BTU/hr	CAP	8760 hr/yr
EQT 0205	19-08 - GME Thermal Oxidizer No. 2		63.7 MM BTU/hr	50.98 MM BTU/hr	CAP	8760 hr/yr
EQT 0208	21-08 - GME Emergency Generator (Dock)		1341 horsepower	1341 horsepower		182 hr/yr
EQT 0209	22-08 - GME Emergency Generator (Tank Farm)		671 horsepower	670.5 horsepower		182 hr/yr
EQT 0210	23-08 - GME Platformer Regenerator Vent		1229.17 SCFM	983.33 SCFM		8760 hr/yr
EQT 0211	24-08 - GME Cooling Tower No. 1		36750 gallons/min	29400 gallons/min		8760 hr/yr
EQT 0212	31-08 - GME Coke Stockpile		1200 tons/hr	5700 tons/day	of Coke (30 day rolling average)	8760 hr/yr
EQT 0213	32-08 - GME Cooling Tower No. 2		108875 gallons/min	87100 gallons/min		8760 hr/yr
EQT 0214	33A-08 - GME A Coker Drum Vent		4500 lb/day	3600 lb/day		8760 hr/yr
EQT 0215	33B-08 - GME B Coker Drum Vent		4500 lb/day	3600 lb/day		8760 hr/yr
EQT 0247	1-07 - Gasoline Storage Tank	3000 gallons		200000 gallons/yr	CAP	8760 hr/yr
EQT 0248	2-07 - Gasoline Storage Tank	3000 gallons		150000 gallons/yr	CAP	8760 hr/yr
EQT 0282	20A-08 - GME North Flare		12.1 MM BTU/hr	9.68 MM BTU/hr	Emissions can also be routed to GME South Flare, 20B-08	8760 hr/yr
EQT 0284	20B-08 - GME South Flare		11.81 MM BTU/hr	9.45 MM BTU/hr	Emissions can also be routed to GME North Flare, 20A-08	8760 hr/yr
EQT 0285	20A-08 SU/SD - GME North Flare Startup/Shutdown					(None Specified)
EQT 0286	20B-08 SU/SD - GME South Flare Startup/Shutdown					(None Specified)
FUG 0053	Unit 205 Fug. - GME Delayed Coker Unit Fugitives				CAP	8760 hr/yr
FUG 0054	Unit 205A Fug. - GME Coker Gas Plant Fugitives				CAP	8760 hr/yr
FUG 0055	Unit 210 Fug. - GME Crude/Vacuum Distillation Unit Fugitives				CAP	8760 hr/yr
FUG 0056	Unit 211 Fug. - GME Naphtha Hydrotreater Unit Fugitives				CAP	8760 hr/yr

INVENTORIES

AI ID: 3165 - Marathon Petroleum Co LLC - LA Refining Division - Garyville Refinery
Activity Number: PER20090017
Permit Number: 3039-V6
Air - Title V Regular Permit Minor Mod

Subject Item Inventory:

ID	Description	Tank Volume	Max. Operating Rate	Normal Operating Rate	Contents	Operating Time
GME Facility						
FUG 0057	Unit 212 Fug. - GME CCR Platformer Unit Fugitives				CAP	8760 hr/yr
FUG 0058	Unit 212A Fug. - GME Platformer Unit (Perchloroethylene) Fugitives				CAP	8760 hr/yr
FUG 0059	Unit 214 Fug. - GME Kerosene Hydrotreater Unit Fugitives				CAP	8760 hr/yr
FUG 0060	Unit 215 Fug. - GME Hydrocracker Fugitives				CAP	8760 hr/yr
FUG 0061	Unit 220 Fug. - GME Sulfur Recovery Plant No. 1 Fugitives				CAP	8760 hr/yr
FUG 0062	Unit 221 Fug. - GME Tail Gas Amine Regeneration for SRU No. 1 Fugitives				CAP	8760 hr/yr
FUG 0063	Unit 222 Fug. - GME Saturates Gas Plant Fugitives				CAP	8760 hr/yr
FUG 0064	Unit 222A Fug. - GME Sat Propane Merox Unit Fugitives				CAP	8760 hr/yr
FUG 0065	Unit 222B Fug. - GME Sat Butane Merox Unit Fugitives				CAP	8760 hr/yr
FUG 0066	Unit 232 Fug. - GME Tail Gas Amine Regeneration for SRU No. 2 Fugitives				CAP	8760 hr/yr
FUG 0067	Unit 233 Fug. - GME Sour Water Stripper Unit Fugitives				CAP	8760 hr/yr
FUG 0068	Unit 234 Fug. - GME Sulfur Recovery Plant No. 2 Fugitives				CAP	8760 hr/yr
FUG 0069	Unit 241 Fug. - GME Intermediate Product Unit Fugitives				CAP	8760 hr/yr
FUG 0070	Unit 243 Fug. - GME Fuel Gas Treater Unit Fugitives				CAP	8760 hr/yr
FUG 0071	Unit 247 Fug. - GME Amine Regeneration Unit Fugitives				CAP	8760 hr/yr
FUG 0072	Unit 250 Fug. - GME Marine Loading Dock No. 4 Unit Fugitives				CAP	8760 hr/yr
FUG 0073	Unit 250A Fug. - GME Marine Vapor Combustor Fugitives				CAP	8760 hr/yr
FUG 0074	Unit 259 Fug. - GME Flare System Fugitives				CAP	8760 hr/yr
FUG 0075	Unit 260 Fug. - GME Wastewater Treatment Plant Train No. 5 Fugitives				CAP	8760 hr/yr
FUG 0076	Unit 263 Fug. - GME Interconnecting Pipeway Fugitives				CAP	8760 hr/yr
FUG 0077	Unit 265 Fug. - GME Truck Rack Fugitives				CAP	8760 hr/yr
FUG 0078	Unit 267 Fug. - GME Blending Facilities Fugitives				CAP	8760 hr/yr
FUG 0079	Unit 271 Fug. - GME Barge Dock No. 3 Unit Fugitives				CAP	8760 hr/yr

Stack Information:

ID	Description	Velocity (ft/sec)	Flow Rate (cubic ft/min-actual)	Diameter (feet)	Discharge Area (square feet)	Height (feet)	Temperature (oF)
GME Facility							
EQT 0185	1-08 - GME A Crude Heater	173.9	522284.93	11.29		225	400
EQT 0186	2-08 - GME B Crude Heater	173.9	522284.93	11.29		225	400
EQT 0187	3-08 - GME A Vacuum Tower Heater	193.9	242830.14	7.29		225	400
EQT 0188	4-08 - GME B Vacuum Tower Heater	193.9	242830.14	7.29		225	400
EQT 0189	5-08 - GME Naphtha Hydrotreater Reactor Charge Heater	27	26700.61	4.58		150	685

INVENTORIES

AI ID: 3165 - Marathon Petroleum Co LLC - LA Refining Division - Garyville Refinery
Activity Number: PER20090017
Permit Number: 3039-V6
Air - Title V Regular Permit Minor Mod

Stack Information:

ID	Description	Velocity (ft/sec)	Flow Rate (cubic ft/min-actual)	Diameter (feet)	Discharge Area (square feet)	Height (feet)	Temperature (oF)
GME Facility							
EQT 0190	6-08 - GME Naphtha Hydrotreater Stripper Reboiler Heater	29.1	28753.93	4.58		150	600
EQT 0191	7A-08 - GME Platformer Heater Cell No. 1	262.5	1214599.19	17.17		275	345
EQT 0192	7B-08 - GME Platformer Heater Cell No. 2	262.5	1214599.19	17.17		275	345
EQT 0193	7C-08 - GME Platformer Heater Cell No. 3	262.5	1214599.19	17.17		275	345
EQT 0195	9-08 - GME KHT Reacter Charge Heater	31.2	30845.92	4.58		152	635
EQT 0196	10-08 - GME KHT Stripper Reboiler Heater	31.6	47909.12	5.67		152	635
EQT 0197	11-08 - GME HCU Train 1 Reactor Charge Heater	114.5	76599.7	5.33		150	757
EQT 0198	12-08 - GME HCU Train 2 Reactor Charge Heater	114.5	76599.7	5.33		150	757
EQT 0199	13-08 - GME HCU Fractionator Heater	26	110667.09	9.5		150	415
EQT 0201	15-08 - GME Coker Charge Heater	29	118880.34	9.33		225	350
EQT 0202	16-08 - GME Boiler No. 1	60.2	137213.67	6.96		90	335
EQT 0204	18-08 - GME Thermal Oxidizer No. 1	41	12075.69	2.5		200	600
EQT 0205	19-08 - GME Thermal Oxidizer No. 2	41	12075.69	2.5		200	600
EQT 0208	21-08 - GME Emergency Generator (Dock)	225.2	176.87	1		10	400
EQT 0209	22-08 - GME Emergency Generator (Tank Farm)	225.2	10612.2	1		10	400
EQT 0210	23-08 - GME Platformer Regenerator Vent	16	139.2	.43		50	795
EQT 0211	24-08 - GME Cooling Tower No. 1	36.52		28		50	80
EQT 0212	31-08 - GME Coke Stockpile	0	1.8	3.28		3.28	80
EQT 0213	32-08 - GME Cooling Tower No. 2	57.91		16		31	80
EQT 0214	33A-08 - GME A Coker Drum Vent	1.86	60.38	.83		180	212
EQT 0215	33B-08 - GME B Coker Drum Vent	1.86	60.38	.83		212	212
EQT 0247	1-07 - Gasoline Storage Tank			5.3		18	
EQT 0248	2-07 - Gasoline Storage Tank			5.3		18	
EQT 0282	20A-08 - GME North Flare	65.6	9660.4		92224	45	375
EQT 0284	20B-08 - GME South Flare	65.6	9660.4		122301	45	375
EQT 0285	20A-08 SU/SD - GME North Flare Startup/Shutdown	65.6	9660.4		92224	45	375
EQT 0286	20B-08 SU/SD - GME South Flare Startup/Shutdown	65.6	9660.4		122301	45	375
FUG 0053	Unit 205 Fug. - GME Delayed Coker Unit Fugitives						
FUG 0054	Unit 205A Fug. - GME Coker Gas Plant Fugitives						
FUG 0055	Unit 210 Fug. - GME Crude/Vacuum Distillation Unit Fugitives						
FUG 0056	Unit 211 Fug. - GME Naphtha Hydrotreater Unit Fugitives						
FUG 0057	Unit 212 Fug. - GME CCR Platformer Unit Fugitives						

INVENTORIES

AI ID: 3165 - Marathon Petroleum Co LLC - LA Refining Division - Garyville Refinery
Activity Number: PER20090017
Permit Number: 3039-V6
Air - Title V Regular Permit Minor Mod

Stack Information:

ID	Description	Velocity (ft/sec)	Flow Rate (cubic ft/min-actual)	Diameter (feet)	Discharge Area (square feet)	Height (feet)	Temperature (oF)
GME Facility							
FUG 0058	Unit 212A Fug. - GME Platformer Unit (Perchloroethylene) Fugitives						
FUG 0059	Unit 214 Fug. - GME Kerosene Hydrotreater Unit Fugitives						
FUG 0060	Unit 215 Fug. - GME Hydrocracker Fugitives						
FUG 0061	Unit 220 Fug. - GME Sulfur Recovery Plant No. 1 Fugitives						
FUG 0062	Unit 221 Fug. - GME Tail Gas Amine Regeneration for SRU No. 1 Fugitives						
FUG 0063	Unit 222 Fug. - GME Saturates Gas Plant Fugitives						
FUG 0064	Unit 222A Fug. - GME Sat Propane Merox Unit Fugitives						
FUG 0065	Unit 222B Fug. - GME Sat Butane Merox Unit Fugitives						
FUG 0066	Unit 232 Fug. - GME Tail Gas Amine Regeneration for SRU No. 2 Fugitives						
FUG 0067	Unit 233 Fug. - GME Sour Water Stripper Unit Fugitives						
FUG 0068	Unit 234 Fug. - GME Sulfur Recovery Plant No. 2 Fugitives						
FUG 0069	Unit 241 Fug. - GME Intermediate Product Unit Fugitives						
FUG 0070	Unit 243 Fug. - GME Fuel Gas Treater Unit Fugitives						
FUG 0071	Unit 247 Fug. - GME Amine Regeneration Unit Fugitives						
FUG 0072	Unit 250 Fug. - GME Marine Loading Dock No. 4 Unit Fugitives						
FUG 0073	Unit 250A Fug. - GME Marine Vapor Combustor Fugitives						
FUG 0074	Unit 259 Fug. - GME Flare System Fugitives						
FUG 0075	Unit 260 Fug. - GME Wastewater Treatment Plant Train No. 5 Fugitives						
FUG 0076	Unit 263 Fug. - GME Interconnecting Pipeway Fugitives						
FUG 0077	Unit 265 Fug. - GME Truck Rack Fugitives						
FUG 0078	Unit 267 Fug. - GME Blending Facilities Fugitives						
FUG 0079	Unit 271 Fug. - GME Barge Dock No. 3 Unit Fugitives						

Relationships:

Subject Item Groups:

ID	Group Type	Group Description
GRP 0028	Equipment Group	GME FUG - GME Fugitive Cap
GRP 0029	Equipment Group	GME HBC - GME Heater/Boiler Cap
GRP 0030	Equipment Group	GME TOC - GME Thermal Oxidizer Cap
GRP 0035	Equipment Group	GME GST - GME Gasoline Storage Tanks CAP
UNF 0002	Unit or Facility Wide	GME - GME Facility

INVENTORIES

AI ID: 3165 - Marathon Petroleum Co LLC - LA Refining Division - Garyville Refinery
Activity Number: PER20090017
Permit Number: 3039-V6
Air - Title V Regular Permit Minor Mod

Group Membership:

ID	Description	Member of Groups
EQT 0185	1-08 - GME A Crude Heater	GRP0000000029
EQT 0186	2-08 - GME B Crude Heater	GRP0000000029
EQT 0187	3-08 - GME A Vacuum Tower Heater	GRP0000000029
EQT 0188	4-08 - GME B Vacuum Tower Heater	GRP0000000029
EQT 0189	5-08 - GME Naphtha Hydrotreater Reactor Charge Heater	GRP0000000029
EQT 0190	6-08 - GME Naphtha Hydrotreater Stripper Reboiler Heater	GRP0000000029
EQT 0191	7A-08 - GME Platformer Heater Cell No. 1	GRP0000000029
EQT 0192	7B-08 - GME Platformer Heater Cell No. 2	GRP0000000029
EQT 0193	7C-08 - GME Platformer Heater Cell No. 3	GRP0000000029
EQT 0195	9-08 - GME KHT Reacter Charge Heater	GRP0000000029
EQT 0196	10-08 - GME KHT Stripper Reboiler Heater	GRP0000000029
EQT 0197	11-08 - GME HCU Train 1 Reactor Charge Heater	GRP0000000029
EQT 0198	12-08 - GME HCU Train 2 Reactor Charge Heater	GRP0000000029
EQT 0199	13-08 - GME HCU Fractionator Heater	GRP0000000029
EQT 0201	15-08 - GME Coker Charge Heater	GRP0000000029
EQT 0202	16-08 - GME Boiler No. 1	GRP0000000029
EQT 0204	18-08 - GME Thermal Oxidizer No. 1	GRP0000000030
EQT 0205	19-08 - GME Thermal Oxidizer No. 2	GRP0000000030
EQT 0247	1-07 - Gasoline Storage Tank	GRP0000000035
EQT 0248	2-07 - Gasoline Storage Tank	GRP0000000035
FUG 0053	Unit 205 Fug. - GME Delayed Coker Unit Fugitives	GRP0000000028
FUG 0054	Unit 205A Fug. - GME Coker Gas Plant Fugitives	GRP0000000028
FUG 0055	Unit 210 Fug. - GME Crude/Vacuum Distillation Unit Fugitives	GRP0000000028
FUG 0056	Unit 211 Fug. - GME Naphtha Hydrotreater Unit Fugitives	GRP0000000028
FUG 0057	Unit 212 Fug. - GME CCR Platformer Unit Fugitives	GRP0000000028
FUG 0058	Unit 212A Fug. - GME Platformer Unit (Perchloroethylene) Fugitives	GRP0000000028
FUG 0059	Unit 214 Fug. - GME Kerosene Hydrotreater Unit Fugitives	GRP0000000028
FUG 0060	Unit 215 Fug. - GME Hydrocracker Fugitives	GRP0000000028
FUG 0061	Unit 220 Fug. - GME Sulfur Recovery Plant No. 1 Fugitives	GRP0000000028
FUG 0062	Unit 221 Fug. - GME Tail Gas Amine Regeneration for SRU No. 1 Fugitives	GRP0000000028
FUG 0063	Unit 222 Fug. - GME Saturates Gas Plant Fugitives	GRP0000000028
FUG 0064	Unit 222A Fug. - GME Sat Propane Merox Unit Fugitives	GRP0000000028
FUG 0065	Unit 222B Fug. - GME Sat Butane Merox Unit Fugitives	GRP0000000028
FUG 0066	Unit 232 Fug. - GME Tail Gas Amine Regeneration for SRU No. 2 Fugitives	GRP0000000028
FUG 0067	Unit 233 Fug. - GME Sour Water Stripper Unit Fugitives	GRP0000000028
FUG 0068	Unit 234 Fug. - GME Sulfur Recovery Plant No. 2 Fugitives	GRP0000000028
FUG 0069	Unit 241 Fug. - GME Intermediate Product Unit Fugitives	GRP0000000028
FUG 0070	Unit 243 Fug. - GME Fuel Gas Treater Unit Fugitives	GRP0000000028
FUG 0071	Unit 247 Fug. - GME Amine Regeneration Unit Fugitives	GRP0000000028
FUG 0072	Unit 250 Fug. - GME Marine Loading Dock No. 4 Unit Fugitives	GRP0000000028
FUG 0073	Unit 250A Fug. - GME Marine Vapor Combustor Fugitives	GRP0000000028

INVENTORIES

AI ID: 3165 - Marathon Petroleum Co LLC - LA Refining Division - Garyville Refinery
Activity Number: PER20090017
Permit Number: 3039-V6
Air - Title V Regular Permit Minor Mod

Group Membership:

ID	Description	Member of Groups
FUG 0074	Unit 259 Fug. - GME Flare System Fugitives	GRP0000000028
FUG 0075	Unit 260 Fug. - GME Wastewater Treatment Plant Train No. 5 Fugitives	GRP0000000028
FUG 0076	Unit 263 Fug. - GME Interconnecting Pipeway Fugitives	GRP0000000028
FUG 0077	Unit 265 Fug. - GME Truck Rack Fugitives	GRP0000000028
FUG 0078	Unit 267 Fug. - GME Blending Facilities Fugitives	GRP0000000028
FUG 0079	Unit 271 Fug. - GME Barge Dock No. 3 Unit Fugitives	GRP0000000028

NOTE: The UNF group relationship is not printed in this table. Every subject item is a member of the UNF group

Annual Maintenance Fee:

Fee Number	Air Contaminant Source	Multiplier	Units Of Measure
0720	0720 Petroleum Refining (Rated Capacity)	180	M bbl/day

SIC Codes:

2911	Petroleum refining	UNF 002

TPOR0149

EMISSION RATES FOR CRITERIA POLLUTANTS

AI ID: 3165 - Marathon Petroleum Co LLC - LA Refining Division - Garyville Refinery
Activity Number: PER20090017
Permit Number: 3039-V6
Air - Title V Regular Permit Minor Mod

	CO			NOx			PM10			SO2			VOC		
Subject Item	Avg lb/hr	Max lb/hr	Tons/Year	Avg lb/hr	Max lb/hr	Tons/Year	Avg lb/hr	Max lb/hr	Tons/Year	Avg lb/hr	Max lb/hr	Tons/Year	Avg lb/hr	Max lb/hr	Tons/Year
GME Facility															
EQT 0185 1-08		7.37			11.80			2.74			16.95			0.55	
EQT 0186 2-08		7.37			11.80			2.74			16.95			0.55	
EQT 0187 3-08		3.10			6.21			1.16			4.50			0.23	
EQT 0188 4-08		3.10			6.21			1.16			4.50			0.23	
EQT 0189 5-08		2.47			1.86			0.46			1.79			0.09	
EQT 0190 6-08		1.43			2.14			0.53			2.07			0.11	
EQT 0191 7A-08		9.48			14.22			3.53			13.73			0.71	
EQT 0192 7B-08		10.85			16.27			4.04			15.72			0.81	
EQT 0193 7C-08		6.68			10.01			2.49			9.67			0.50	
EQT 0195 9-08		2.95			2.22			0.55			2.14			0.11	
EQT 0196 10-08		2.44			3.65			0.91			3.53			0.18	
EQT 0197 11-08		3.40			2.55			0.63			2.46			0.13	
EQT 0198 12-08		3.40			2.55			0.63			2.46			0.13	
EQT 0199 13-08		7.23			11.56			2.69			10.47			0.54	
EQT 0201 15-08		9.02			14.44			3.36			39.08			0.68	
EQT 0202 16-08		10.51			21.03			3.92			15.23			0.79	
EQT 0204 18-08		2.55			12.75			0.47			61.67			0.03	
EQT 0205 19-08		2.55			12.75			0.47			61.67			0.03	
EQT 0208 21-08	8.96	11.20	0.82	41.57	51.96	3.78	2.95	3.69	0.27	0.01	0.02	<0.01	3.31	4.14	0.30
EQT 0209 22-08	4.48	5.60	0.41	20.79	25.98	1.89	1.48	1.84	0.13	0.01	0.01	<0.01	1.66	2.07	0.15
EQT 0210 23-08	1.04	1.30	4.54				0.07	0.09	0.33				0.45	0.56	1.95
EQT 0211 24-08							0.29	0.31	1.29				1.23	1.54	5.41
EQT 0212 31-08							0.01	0.04	0.07				<0.01	0.01	0.01

EMISSION RATES FO[illegible]RITERIA POLLUTANTS

AI ID: 3165 - Marathon Petroleum Co LLC - LA Refining Division - Garyville Refinery
Activity Number: PER20090017
Permit Number: 3039-V6
Air - Title V Regular Permit Minor Mod

	CO			NOx			PM10			SO2			VOC		
Subject Item	Avg lb/hr	Max lb/hr	Tons/Year	Avg lb/hr	Max lb/hr	Tons/Year	Avg lb/hr	Max lb/hr	Tons/Year	Avg lb/hr	Max lb/hr	Tons/Year	Avg lb/hr	Max lb/hr	Tons/Year
GME Facility															
EQT 0213 32-08							0.87	0.91	3.83				3.66	4.57	16.02
EQT 0214 33A-08													36.00	45.00	6.57
EQT 0215 33B-08													36.00	45.00	6.57
EQT 0247 1-07														0.28	
EQT 0248 2-07														0.26	
EQT 0282 20A-08	1.26	1.57	2.01	0.94	1.17	1.45	0.07	0.09	0.11	0.58	0.91	2.25	0.42	0.53	1.19
EQT 0284 20B-08	1.24	1.55	1.93	0.92	1.14	1.35	0.07	0.09	0.10	0.58	0.90	2.25	0.42	0.53	1.19
EQT 0285 20A-08 SU/SD	6.95	8.68	0.12	32.43	40.54	0.57				172.16	215.20	6.83	111.23	139.04	1.64
EQT 0286 20B-08 SU/SD	0.71	0.89	0.01	2.98	3.72	0.06				164.59	205.73	2.04	5.22	6.53	0.15
FUG 0053 Unit 205 Fug.														19.25	
FUG 0054 Unit 205A Fug.														1.80	
FUG 0055 Unit 210 Fug.														17.01	
FUG 0056 Unit 211 Fug.														0.96	
FUG 0057 Unit 212 Fug.														2.62	
FUG 0058 Unit 212A Fug.														0.13	
FUG 0059 Unit 214 Fug.														4.55	
FUG 0060 Unit 215 Fug.														8.83	
FUG 0061 Unit 220 Fug.											0.01				
FUG 0062 Unit 221 Fug.														0.07	
FUG 0063 Unit 222 Fug.														7.88	
FUG 0064 Unit 222A Fug.														1.53	
FUG 0065 Unit 222B Fug.														0.93	
FUG 0066 Unit 232 Fug.														0.07	

TPOR0145

EMISSION RATES FOR CRITERIA POLLUTANTS

AI ID: 3165 - Marathon Petroleum Co LLC - LA Refining Division - Garyville Refinery
Activity Number: PER20090017
Permit Number: 3039-V6
Air - Title V Regular Permit Minor Mod

	CO			NOx			PM10			SO2			VOC		
Subject Item	Avg lb/hr	Max lb/hr	Tons/Year	Avg lb/hr	Max lb/hr	Tons/Year	Avg lb/hr	Max lb/hr	Tons/Year	Avg lb/hr	Max lb/hr	Tons/Year	Avg lb/hr	Max lb/hr	Tons/Year
GME Facility															
FUG 0067 Unit 233 Fug.														0.28	
FUG 0068 Unit 234 Fug.											0.01				
FUG 0069 Unit 241 Fug.														0.14	
FUG 0070 Unit 243 Fug.														1.01	
FUG 0071 Unit 247 Fug.														0.07	
FUG 0072 Unit 250 Fug.														0.44	
FUG 0073 Unit 250A Fug.														0.18	
FUG 0074 Unit 259 Fug.														0.71	
FUG 0075 Unit 260 Fug.														3.92	
FUG 0076 Unit 263 Fug.														10.33	
FUG 0077 Unit 265 Fug.														1.88	
FUG 0078 Unit 267 Fug.														2.89	
FUG 0079 Unit 271 Fug.														0.57	
GRP 0028 GME FUG										0.02		0.07	73.39		321.46
GRP 0029 GME HBC	72.64		318.19	84.87		371.70	25.24		110.56	54.08		214.88	5.08		22.26
GRP 0030 GME TOC	4.08		17.86	20.39		89.32	0.76		3.33	46.08		201.83	0.04		0.18
GRP 0035 GME GST													0.43		1.89

Note: Emission rates in bold are from alternate scenarios and are not included in permitted totals unless otherwise noted in a footnote.

TPOR0145

EMISSION RATES FOR TAP/HAP & OTHER POLLUTANTS

AI ID: 3165 - Marathon Petroleum Co LLC - LA Refining Division - Garyville Refinery
Activity Number: PER20090017
Permit Number: 3039-V6
Air - Title V Regular Permit Minor Mod

Emission Pt.	Pollutant	Avg lb/hr	Max lb/hr	Tons/Year
EQT 0185 1-08	Ammonia		1.96	
EQT 0186 2-08	Ammonia		1.96	
EQT 0187 3-08	Ammonia		0.80	
EQT 0188 4-08	Ammonia		0.80	
EQT 0201 15-08	Ammonia		3.17	
EQT 0204 18-08	Hydrogen sulfide		<0.01	
EQT 0205 19-08	Hydrogen sulfide		<0.01	
EQT 0210 23-08	Hydrochloric acid	0.51	0.64	2.25
EQT 0211 24-08	1,3-Butadiene	0.001	0.001	0.002
	2,2,4-Trimethylpentane	<0.001	<0.001	<0.01
	Benzene	<0.001	0.001	<0.01
	Cresol	<0.001	<0.001	<0.01
	Cumene	<0.001	<0.001	<0.01
	Ethyl benzene	0.003	0.004	0.01
	Naphthalene	<0.001	<0.001	<0.01
	Styrene	<0.001	<0.001	<0.01
	Toluene	0.01	0.01	0.03
	Xylene (mixed isomers)	0.01	0.01	0.04
	n-Hexane	<0.001	<0.001	<0.01
EQT 0212 31-08	Nickel (and compounds)	<0.01	<0.01	<0.01
EQT 0213 32-08	1,3-Butadiene	<0.001	<0.001	0.001
	2,2,4-Trimethylpentane	0.002	0.003	0.01
	Benzene	0.01	0.02	0.05
	Biphenyl	<0.001	<0.001	<0.01
	Cresol	<0.001	<0.001	<0.01
	Cumene	<0.001	<0.001	<0.01
	Ethyl benzene	0.01	0.01	0.02
	Hydrofluoric acid	0.005	0.01	0.02
	Hydrogen sulfide	<0.001	<0.001	<0.01
	Naphthalene	<0.001	<0.001	<0.01
	Styrene	<0.001	<0.001	<0.01
	Toluene	0.02	0.02	0.08
	Xylene (mixed isomers)	0.02	0.02	0.07

EMISSION RATES FOR TAP/HAP & OTHER POLLUTANTS

AI ID: 3165 - Marathon Petroleum Co LLC - LA Refining Division - Garyville Refinery
Activity Number: PER20090017
Permit Number: 3039-V6
Air - Title V Regular Permit Minor Mod

Emission Pt.	Pollutant	Avg lb/hr	Max lb/hr	Tons/Year
EQT 0213 32-08	n-Hexane	0.01	0.01	0.05
EQT 0214 33A-08	Hydrogen sulfide	0.36	0.45	0.07
EQT 0215 33B-08	Hydrogen sulfide	0.36	0.45	0.07
EQT 0247 1-07	2,2,4-Trimethylpentane		0.004	
	Benzene		<0.001	
	Cumene		<0.001	
	Ethyl benzene		<0.001	
	Naphthalene		<0.001	
	Toluene		0.001	
	Xylene (mixed isomers)		<0.001	
	n-Hexane		<0.001	
EQT 0248 2-07	2,2,4-Trimethylpentane		0.004	
	Benzene		<0.001	
	Cumene		<0.001	
	Ethyl benzene		<0.001	
	Naphthalene		<0.001	
	Toluene		0.001	
	Xylene (mixed isomers)		<0.001	
	n-Hexane		<0.001	
EQT 0282 20A-08	Benzene	<0.001	<0.001	<0.01
	Ethyl benzene	0.001	0.002	0.01
	Formaldehyde	0.002	0.002	0.01
	Polynuclear Aromatic Hydrocarbons	<0.001	<0.001	0.001
	Toluene	0.002	0.003	0.01
	Xylene (mixed isomers)	<0.001	0.001	<0.01
	n-Hexane	0.06	0.07	0.10
EQT 0284 20B-08	Benzene	<0.001	<0.001	<0.01
	Ethyl benzene	0.001	0.002	0.01
	Formaldehyde	0.002	0.002	<0.01
	Polynuclear Aromatic Hydrocarbons	<0.001	<0.001	0.001
	Toluene	0.002	0.003	0.01
	Xylene (mixed isomers)	<0.001	0.001	<0.01
	n-Hexane	0.05	0.07	0.10

EMISSION RATES FOR TAP/HAP & OTHER POLLUTANTS

AI ID: 3165 - Marathon Petroleum Co LLC - LA Refining Division - Garyville Refinery
Activity Number: PER20090017
Permit Number: 3039-V6
Air - Title V Regular Permit Minor Mod

Emission Pt.	Pollutant	Avg lb/hr	Max lb/hr	Tons/Year
EQT 0285 20A-08 SU/SD	Benzene	0.001	0.002	<0.01
	Hydrogen sulfide	0.44	0.55	0.01
	Toluene	0.01	0.01	<0.01
	Xylene (mixed isomers)	0.07	0.08	<0.01
	n-Hexane	3.04	3.80	0.04
EQT 0286 20B-08 SU/SD	Benzene	0.003	0.004	<0.01
	Hydrogen sulfide	0.44	0.55	0.01
	n-Hexane	0.02	0.02	<0.01
FUG 0053 Unit 205 Fug.	Benzene		0.04	
	Ethyl benzene		0.15	
	Toluene		0.39	
	Xylene (mixed isomers)		0.49	
	n-Hexane		0.15	
FUG 0054 Unit 205A Fug.	Benzene		0.01	
	Ethyl benzene		0.01	
	Toluene		0.04	
	Xylene (mixed isomers)		0.07	
	n-Hexane		0.03	
FUG 0055 Unit 210 Fug	Benzene		0.03	
	Ethyl benzene		0.11	
	Toluene		0.31	
	Xylene (mixed isomers)		0.37	
	n-Hexane		0.14	
FUG 0056 Unit 211 Fug.	Benzene		<0.01	
	Ethyl benzene		0.01	
	Toluene		0.02	
	Xylene (mixed isomers)		0.03	
	n-Hexane		0.01	
FUG 0057 Unit 212 Fug.	Benzene		0.05	
	Ethyl benzene		0.05	
	Toluene		0.20	
	Xylene (mixed isomers)		0.25	
	n-Hexane		0.10	

EMISSION RATES FOR TAP/HAP & OTHER POLLUTANTS

AI ID: 3165 - Marathon Petroleum Co LLC - LA Refining Division - Garyville Refinery
Activity Number: PER20090017
Permit Number: 3039-V6
Air - Title V Regular Permit Minor Mod

Emission Pt.	Pollutant	Avg lb/hr	Max lb/hr	Tons/Year
FUG 0058 Unit 212A Fug.	Tetrachloroethylene		0.13	
	Xylene (mixed isomers)		<0.01	
FUG 0059 Unit 214 Fug.	Benzene		<0.01	
	Ethyl benzene		0.04	
	Toluene		<0.01	
	n-Hexane		0.21	
FUG 0060 Unit 215 Fug.	Benzene		0.01	
	Ethyl benzene		0.01	
	Toluene		0.01	
FUG 0061 Unit 220 Fug.	Ammonia		0.04	
	Hydrogen sulfide		0.09	
FUG 0062 Unit 221 Fug.	Hydrogen sulfide		0.12	
FUG 0063 Unit 222 Fug.	Ethyl benzene		0.01	
	Toluene		0.01	
	Xylene (mixed isomers)		0.01	
FUG 0066 Unit 232 Fug.	Hydrogen sulfide		0.12	
FUG 0067 Unit 233 Fug.	Ammonia		0.12	
	Benzene		<0.01	
	Ethyl benzene		<0.01	
	Hydrogen sulfide		0.11	
	Toluene		0.01	
	Xylene (mixed isomers)		0.01	
	n-Hexane		0.01	
FUG 0068 Unit 234 Fug.	Ammonia		0.04	
	Hydrogen sulfide		0.09	
FUG 0069 Unit 241 Fug.	Benzene		<0.001	
	Ethyl benzene		<0.001	
	Toluene		0.002	
	Xylene (mixed isomers)		0.003	
	n-Hexane		0.001	
FUG 0070 Unit 243 Fug.	Benzene		<0.01	
FUG 0071 Unit 247 Fug.	Hydrogen sulfide		0.12	
FUG 0072 Unit 250 Fug.	n-Hexane		<0.01	

EMISSION RATES FOR TAP/HAP & OTHER POLLUTANTS

AI ID: 3165 - Marathon Petroleum Co LLC - LA Refining Division - Garyville Refinery
Activity Number: PER20090017
Permit Number: 3039-V6
Air - Title V Regular Permit Minor Mod

Emission Pt.	Pollutant	Avg lb/hr	Max lb/hr	Tons/Year
FUG 0073 Unit 250A Fug.	Benzene		0.01	
	Ethyl benzene		<0.01	
	Toluene		<0.01	
	Xylene (mixed isomers)		<0.01	
	n-Hexane		<0.01	
FUG 0074 Unit 259 Fug.	Benzene		0.01	
	Ethyl benzene		<0.01	
	Toluene		<0.01	
	Xylene (mixed isomers)		0.03	
FUG 0075 Unit 260 Fug.	Benzene		<0.01	
	Ethyl benzene		0.02	
	Toluene		0.05	
	Xylene (mixed isomers)		0.06	
	n-Hexane		0.02	
FUG 0076 Unit 263 Fug.	2,2,4-Trimethylpentane		0.98	
	Benzene		0.11	
	Ethyl benzene		0.11	
	Toluene		0.45	
	Xylene (mixed isomers)		0.48	
	n-Hexane		0.17	
FUG 0077 Unit 265 Fug.	Benzene		<0.01	
	Ethyl benzene		<0.01	
	Toluene		<0.01	
	Xylene (mixed isomers)		<0.01	
FUG 0078 Unit 267 Fug.	Benzene		0.04	
	Ethyl benzene		0.04	
	Toluene		<0.01	
	Xylene (mixed isomers)		0.17	
	n-Hexane		0.06	
FUG 0079 Unit 271 Fug.	Benzene		<0.01	
	Ethyl benzene		<0.01	
	Toluene		0.02	
	Xylene (mixed isomers)		0.02	

EMISSION RATES FOR TAP/HAP & OTHER POLLUTANTS

A D 165 - Marathon Petroleum Co LLC - LA Refining Division - Garyville Refinery
Activity Number: PER20090017
Permit Number: 3039-V6
Air - Title V Regular Permit Minor Mod

Emission	Pollutant	Avg lb/hr	Max lb/hr	Tons/Year
	n-Hexane		<0.01	
	2,2,4-Trimethylpentane	0.82		3.59
	Ammonia	0.16		0.72
	Benzene	0.27		1.17
	Ethyl benzene	0.47		2.06
	Hydrogen sulfide	0.54		2.38
	Tetrachloroethylene	0.11		0.47
	Toluene	1.26		5.50
	Xylene (mixed isomers)	1.66		7.29
	n-Hexane	0.75		3.30
	Ammonia	6.96		30.47
	Hydrogen sulfide	<0.01		0.02
	2,2,4-Trimethylpentane	0.01		0.03
	Benzene	0.002		0.01
	Cumene	<0.001		<0.01
	Ethyl benzene	<0.001		<0.01
	Naphthalene	<0.001		<0.01
	Toluene	0.002		0.01
	Xylene (mixed isomers)	<0.001		<0.01
	n-Hexane	0.001		0.01
	1,3-Butadiene			<0.01
	2,2,4-Trimethylpentane			3.63
	Ammonia			31.19
	Benzene			1.24
	Biphenyl			<0.01
	Cresol			<0.01
	Cumene			<0.01
	Ethyl benzene			2.11
	Formaldehyde			0.01
	Hydrochloric acid			2.25
	Hydrofluoric acid			0.02
	Hydrogen sulfide			2.56
	Naphthalene			<0.01

EMISSION RATES FOR TAP/HAP & OTHER POLLUTANTS

AI ID: 3165 - Marathon Petroleum Co LLC - LA Refining Division - Garyville Refinery
Activity Number: PER20090017
Permit Number: 3039-V6
Air - Title V Regular Permit Minor Mod

Emission Pt.	Pollutant	Avg lb/hr	Max lb/hr	Tons/Year
UNF 0002 GME	Nickel (and compounds)			<0.01
	Polynuclear Aromatic Hydrocarbons			<0.01
	Styrene			<0.01
	Tetrachloroethylene			0.47
	Toluene			5.64
	Xylene (mixed isomers)			7.42
	n-Hexane			3.60

Note: Emission rates in bold are from alternate scenarios and are not included in permitted totals unless otherwise noted in a footnote. Emission rates attributed to the UNF reflect the sum of the TAP/HAP limits of the individual emission points (or caps) under this permit, but do not constitute an emission cap.

SPECIFIC REQUIREMENTS

AI ID: 3165 - Marathon Petroleum Co LLC - LA Refining Division - Garyville Refinery
Activity Number: PER20090017
Permit Number: 3039-V6
Air - Title V Regular Permit Minor Mod

EQT 0185 1-08 - GME A Crude Heater

1	[40 CFR 52.21]	Nitrogen dioxide <= 0.0125 lb/MMBTU, annual average. Equipped with Ultra Low NOX Burners (UNLB) and Selective Catalytic Reduction (SCR) added as voluntary control. [PSD-LA-719(M-1)]. [40 CFR 52.21, LAC 33:III.509] Which Months: All Year Statistical Basis: Annual average
2	[40 CFR 52.21]	Particulate matter (10 microns or less) <= 0.0075 lb/MMBTU, 3-hour average, with optimum burner design and utilization of refinery fuel gas. [PSD-LA-719(M-1)]. [40 CFR 52.21, LAC 33:III.509] Which Months: All Year Statistical Basis: Three-hour average
3	[40 CFR 60.104(a)(1)]	Fuel gas: Hydrogen sulfide <= 0.1 gr/dscf (230 mg/dscm) or less than 160 ppm on a three hour rolling average. Subpart J. [40 CFR 60.104(a)(1)] Which Months: All Year Statistical Basis: Three-hour rolling average
4	[40 CFR 60.105(a)(4)]	Hydrogen sulfide monitored by continuous emission monitor (CEM) continuously. Monitor the H2S in fuel gases before being burned in any fuel gas combustion device. Subpart J. [40 CFR 60.105(a)(4)] Which Months: All Year Statistical Basis: None specified
5	[40 CFR 60.106(a)]	Use as reference methods and procedures the test methods in 40 CFR 60 appendix A or other methods and procedures as specified in 40 CFR 60.106, except as provided in 40 CFR 60.8(b), in conducting the performance tests required in 40 CFR 60.8. Subpart J. [40 CFR 60.106(a)]
6	[40 CFR 60.106]	Determine compliance with standards using the test methods and procedures specified in 40 CFR 60.106(a) through (k). Subpart J.
7	[40 CFR 60.107]	Shall comply with all the applicable requirements of reporting and recordkeeping as specified in 40 CFR 60.107.
8	[LAC 33:III.1101.B]	Opacity <= 20 percent, except during the cleaning of a fire box or building of a new fire, soot blowing or lancing, charging of an incinerator, equipment changes, ash removal or rapping of precipitators, which may have an opacity in excess of 20 percent for not more than one six-minute period in any 60 consecutive minutes. Which Months: All Year Statistical Basis: None specified
9	[LAC 33:III.1313.C]	Total suspended particulate <= 0.6 lb/MMBTU of heat input. Which Months: All Year Statistical Basis: None specified
10	[LAC 33:III.1503.C]	Compliance with all the applicable requirements of NSPS, 40 CFR 60, Subpart J has been determined to be compliance in accordance with LAC 33:III.1503.
11	[LAC 33:III.501.C.6]	Conduct a performance/emissions test: Due within 180 days after the startup of the unit. The stack test's purpose is to demonstrate compliance with the emission limits of this permit. Test methods and procedures shall be in accordance with New Source Performance Standards, 40 CFR 60, Appendix A, Method 7E - Determination of Nitrogen Oxides Emissions from Stationary Sources; Method 10 - Determination of Carbon Monoxide Emissions from Stationary Sources; Method 5 - Determination of Particulate Emissions from Stationary Sources; Method 6 - Determination of Sulfur Dioxide Emissions from Stationary Sources; and Method 25A or 25B - Determination of Total Gaseous Organic Concentration using a Flame Ionization Analyzer or Nondispersive Infrared Analyzer. Use alternate stack test methods only with the prior approval of the Office of Environmental Assessment. As required by LAC 33:III.913, provide necessary sampling ports in stacks or ducts and such other safe and proper sampling and testing facilities for proper determination of the emission limits. Other methods in 40 CFR 60.106 may be utilized for the above referenced methods if applicable. If CEMS are installed then the permittee shall use appropriate Specifications of 40 CFR 60, Appendix B and Quality Assurance Procedures of 40 CFR 60, Appendix F to show compliance.
12	[LAC 33:III.509]	VOC, Total <= 0.0015 lb/MMBTU, 3-hour average. [PSD-LA-719(M-1)]. [LAC 33:III.509, 40 CFR 52.21] Which Months: All Year Statistical Basis: Three-hour average

EQT 0185 1-08 - GME A Crude Heater

13 [LAC 33:III.509]
Hydrogen sulfide <= 25 ppmv, annual average (based on H2S). Total sulfur content based on H2S and other compunds shall not exceed 40 ppmv. [PSD-LA-719(M-1)]. [LAC 33:III.509, 40 CFR 52.21]
Which Months: All Year Statistical Basis: Annual average

14 [LAC 33:III.509]
Carbon monoxide <= 0.02 lb/MMBTU, 30-day average, using refinery fuel gas. [PSD-LA-719(M-1)]. [LAC 33:III.509, 40 CFR 52.21]
Which Months: All Year Statistical Basis: Thirty-day average

EQT 0186 2-08 - GME B Crude Heater

15 [40 CFR 52.21]
Carbon monoxide <= 0.02 lb/MMBTU, 30-day average, using refinery fuel gas. [PSD-LA-719(M-1)]. [40 CFR 52.21, LAC 33:III.509]
Which Months: All Year Statistical Basis: Thirty-day average

16 [40 CFR 52.21]
Particulate matter (10 microns or less) <= 0.0075 lb/MMBTU, 3-hour average, with optimum burner design and utilization of refinery fuel gas. [PSD-LA-719(M-1)]. [40 CFR 52.21, LAC 33:III.509]
Which Months: All Year Statistical Basis: Three-hour average

17 [40 CFR 52.21]
Nitrogen dioxide <= 0.0125 lb/MMBTU, annaul average. Equipped with Ultra Low NOX Burners (UNLB) and Selective Catalytic Reduction (SCR) added as voluntary control. [PSD-LA-719(M-1)]. [40 CFR 52.21, LAC 33:III.509]
Which Months: All Year Statistical Basis: Annual average

18 [40 CFR 60.104(a)(1)]
Fuel gas: Hydrogen sulfide <= 0.1 gr/dscf (230 mg/dscm) or less than 160 ppm on a three hour rolling average. Subpart J. [40 CFR 60.104(a)(1)]
Which Months: All Year Statistical Basis: Three-hour rolling average

19 [40 CFR 60.105(a)(4)]
Hydrogen sulfide monitored by continuous emission monitor (CEM) continuously. Monitor the H2S in fuel gases before being burned in any fuel gas combustion device. Subpart J. [40 CFR 60.105(a)(4)]
Which Months: All Year Statistical Basis: None specified

20 [40 CFR 60.106(a)]
Use as reference methods and procedures the test methods in 40 CFR 60 appendix A or other methods and procedures as specified in 40 CFR 60.106, except as provided in 40 CFR 60.8(b), in conducting the performance tests required in 40 CFR 60.8. Subpart J. [40 CFR 60.106(a)]

21 [40 CFR 60.106]
Determine compliance with standards using the test methods and procedures specified in 40 CFR 60.106(a) through (k). Subpart J.

22 [40 CFR 60.107]
Shall comply with all the applicable requirements of reporting and recordkeeping as specified in 40 CFR 60.107.

23 [LAC 33:III.1101.B]
Opacity <= 20 percent, except during the cleaning of a fire box or building of a new fire, soot blowing or lancing, charging of an incinerator, equipment changes, ash removal or rapping of precipitators, which may have an opacity in excess of 20 percent for not more than one six-minute period in any 60 consecutive minutes.
Which Months: All Year Statistical Basis: None specified

24 [LAC 33:III.1313.C]
Total suspended particulate <= 0.6 lb/MMBTU of heat input.
Which Months: All Year Statistical Basis: None specified

25 [LAC 33:III.1503.C]
Compliance with all the applicable requirements of NSPS, 40 CFR 60, Subpart J has been determined to be compliance in accordance with LAC 33:III.1503.

EQT 0186 2-08 - GME B Crude Heater

26	[LAC 33:III.501.C.6]	Conduct a performance/emissions test: Due within 180 days after the startup of the unit. The stack test's purpose is to demonstrate compliance with the emission limits of this permit. Test methods and procedures shall be in accordance with New Source Performance Standards, 40 CFR 60, Appendix A, Method 7E - Determination of Nitrogen Oxides Emissions from Stationary Sources; Method 10 - Determination of Carbon Monoxide Emissions from Stationary Sources; Method 5 - Determination of Particulate Emissions from Stationary Sources; Method 6 - Determination of Sulfur Dioxide Emissions from Stationary Sources; and Method 25A or 25B - Determination of Total Gaseous Organic Concentration using a Flame Ionization Analyzer or Nondispersive Infrared Analyzer. Use alternate stack test methods only with the prior approval of the Office of Environmental Assessment. As required by LAC 33:III.913, provide necessary sampling ports in stacks or ducts and such other safe and proper sampling and testing facilities for proper determination of the emission limits. Other methods in 40 CFR 60.106 may be utilized for the above referenced methods if applicable. If CEMS are installed then the permittee shall use appropriate Specifications of 40 CFR 60, Appendix B and Quality Assurance Procedures of 40 CFR 60, Appendix F to show compliance.
27	[LAC 33:III.509]	VOC, Total <= 0.0015 lb/MMBTU, 3-hour average. [PSD-LA-719(M-1)]. [LAC 33:III.509, 40 CFR 52.21] Which Months: All Year Statistical Basis: Three-hour average
28	[LAC 33:III.509]	Hydrogen sulfide <= 25 ppmv, annual average (based on H2S). Total sulfur content based on H2S and other compunds shall not exceed 40 ppmv. [PSD-LA-719(M-1)]. [LAC 33:III.509, 40 CFR 52.21] Which Months: All Year Statistical Basis: Annual average

EQT 0187 3-08 - GME A Vacuum Tower Heater

29	[40 CFR 52.21]	Particulate matter (10 microns or less) <= 0.0075 lb/MMBTU, 3-hour average, with optimum burner design and utilization of refinery fuel gas. [PSD-LA-719(M-1)]. [40 CFR 52.21, LAC 33:III.509] Which Months: All Year Statistical Basis: Three-hour average
30	[40 CFR 52.21]	Nitrogen dioxide <= 0.0125 lb/MMBTU, annaul average. Equipped with Ultra Low NOX Burners (UNLB) and Selective Catalytic Reduction (SCR) added as voluntary control. [PSD-LA-719(M-1)]. [40 CFR 52.21, LAC 33:III.509] Which Months: All Year Statistical Basis: Annual average
31	[40 CFR 60.104(a)(1)]	Fuel gas: Hydrogen sulfide <= 0.1 gr/dscf (230 mg/dscm) or less than 160 ppm on a three hour rolling average. Subpart J. [40 CFR 60.104(a)(1)] Which Months: All Year Statistical Basis: Three-hour rolling average
32	[40 CFR 60.105(a)(4)]	Hydrogen sulfide monitored by continuous emission monitor (CEM) continuously. Monitor the H2S in fuel gases before being burned in any fuel gas combustion device. Subpart J. [40 CFR 60.105(a)(4)] Which Months: All Year Statistical Basis: None specified
33	[40 CFR 60.106(a)]	Use as reference methods and procedures the test methods in 40 CFR 60 appendix A or other methods and procedures as specified in 40 CFR 60.106, except as provided in 40 CFR 60.8(b), in conducting the performance tests required in 40 CFR 60.8. Subpart J. [40 CFR 60.106(a)]
34	[40 CFR 60.106]	Determine compliance with standards using the test methods and procedures specified in 40 CFR 60.106(a) through (k). Subpart J.
35	[40 CFR 60.107]	Shall comply with all the applicable requirements of reporting and recordkeeping as specified in 40 CFR 60.107.

EQT 0187 3-08 - GME A Vacuum Tower Heater

36 [LAC 33:III.1101.B]
Opacity <= 20 percent, except during the cleaning of a fire box or building of a new fire, soot blowing or lancing, charging of an incinerator, equipment changes, ash removal or rapping of precipitators, which may have an opacity in excess of 20 percent for not more than one six-minute period in any 60 consecutive minutes.
Which Months: All Year Statistical Basis: None specified

37 [LAC 33:III.1313.C]
Total suspended particulate <= 0.6 lb/MMBTU of heat input.
Which Months: All Year Statistical Basis: None specified

38 [LAC 33:III.1503.C]
Compliance with all the applicable requirements of NSPS, 40 CFR 60, Subpart J has been determined to be compliance in accordance with LAC 33:III.1503.

39 [LAC 33:III.501.C.6]
Conduct a performance/emissions test: Due within 180 days after the startup of the unit. The stack test's purpose is to demonstrate compliance with the emission limits of this permit. Test methods and procedures shall be in accordance with New Source Performance Standards, 40 CFR 60, Appendix A, Method 7E - Determination of Nitrogen Oxides Emissions from Stationary Sources; Method 10 - Determination of Carbon Monoxide Emissions from Stationary Sources; Method 5 - Determination of Particulate Emissions from Stationary Sources; Method 6 - Determination of Sulfur Dioxide Emissions from Stationary Sources; and Method 25A or 25B - Determination of Total Gaseous Organic Concentration using a Flame Ionization Analyzer or Nondispersive Infrared Analyzer. Use alternate stack test methods only with the prior approval of the Office of Environmental Assessment. As required by LAC 33:III.913, provide necessary sampling ports in stacks or ducts and such other safe and proper sampling and testing facilities for proper determination of the emission limits. Other methods in 40 CFR 60.106 may be utilized for the above referenced methods if applicable. If CEMS are installed then the permittee shall use appropriate Specifications of 40 CFR 60, Appendix B and Quality Assurance Procedures of 40 CFR 60, Appendix F to show compliance.

40 [LAC 33:III.509]
Carbon monoxide <= 0.02 lb/MMBTU, 30-day average, using refinery fuel gas. [PSD-LA-719(M-1)]. [LAC 33:III.509, 40 CFR 52.21]
Which Months: All Year Statistical Basis: Thirty-day average

41 [LAC 33:III.509]
VOC, Total <= 0.0015 lb/MMBTU, 3-hour average. [PSD-LA-719(M-1)]. [LAC 33:III.509, 40 CFR 52.21]
Which Months: All Year Statistical Basis: Three-hour average

42 [LAC 33:III.509]
Hydrogen sulfide <= 25 ppmv, annual average (based on H2S). Total sulfur content based on H2S and other compunds shall not exceed 40 ppmv. [PSD-LA-719(M-1)]. [LAC 33:III.509, 40 CFR 52.21]
Which Months: All Year Statistical Basis: Annual average

EQT 0188 4-08 - GME B Vacuum Tower Heater

43 [40 CFR 52.21]
Nitrogen dioxide <= 0.0125 lb/MMBTU, annual average. Equipped with Ultra Low NOX Burners (UNLB) and Selective Catalytic Reduction (SCR) added as voluntary control. [PSD-LA-719(M-1)]. [40 CFR 52.21, LAC 33:III.509]
Which Months: All Year Statistical Basis: Annual average

44 [40 CFR 52.21]
Particulate matter (10 microns or less) <= 0.0075 lb/MMBTU, 3-hour average, with optimum burner design and utilization of refinery fuel gas. [PSD-LA-719(M-1)]. [40 CFR 52.21, LAC 33:III.509]
Which Months: All Year Statistical Basis: Three-hour average

45 [40 CFR 60.104(a)(1)]
Fuel gas: Hydrogen sulfide <= 0.1 gr/dscf (230 mg/dscm) or less than 160 ppm on a three hour rolling average. Subpart J. [40 CFR 60.104(a)(1)]
Which Months: All Year Statistical Basis: Three-hour rolling average

EQT 0188 4-08 - GME B Vacuum Tower Heater

46	[40 CFR 60.105(a)(4)]	Hydrogen sulfide monitored by continuous emission monitor (CEM) continuously. Monitor the H2S in fuel gases before being burned in any fuel gas combustion device. Subpart J. [40 CFR 60.105(a)(4)] Which Months: All Year Statistical Basis: None specified
47	[40 CFR 60.106(a)]	Use as reference methods and procedures the test methods in 40 CFR 60 appendix A or other methods and procedures as specified in 40 CFR 60.106, except as provided in 40 CFR 60.8(b), in conducting the performance tests required in 40 CFR 60.8. Subpart J. [40 CFR 60.106(a)]
48	[40 CFR 60.106]	Determine compliance with standards using the test methods and procedures specified in 40 CFR 60.106(a) through (k). Subpart J.
49	[40 CFR 60.107]	Shall comply with all the applicable requirements of reporting and recordkeeping as specified in 40 CFR 60.107.
50	[LAC 33:III.1101.B]	Opacity <= 20 percent, except during the cleaning of a fire box or building of a new fire, soot blowing or lancing, charging of an incinerator, equipment changes, ash removal or rapping of precipitators, which may have an opacity in excess of 20 percent for not more than one six-minute period in any 60 consecutive minutes. Which Months: All Year Statistical Basis: None specified
51	[LAC 33:III.1313.C]	Total suspended particulate <= 0.6 lb/MMBTU of heat input. Which Months: All Year Statistical Basis: None specified
52	[LAC 33:III.1503.C]	Compliance with all the applicable requirements of NSPS, 40 CFR 60, Subpart J has been determined to be compliance in accordance with LAC 33:III.1503.
53	[LAC 33:III.501.C.6]	Conduct a performance/emissions test: Due within 180 days after the startup of the unit. The stack test's purpose is to demonstrate compliance with the emission limits of this permit. Test methods and procedures shall be in accordance with New Source Performance Standards, 40 CFR 60, Appendix A, Method 7E - Determination of Nitrogen Oxides Emissions from Stationary Sources; Method 10 - Determination of Carbon Monoxide Emissions from Stationary Sources; Method 5 - Determination of Particulate Emissions from Stationary Sources; Method 6 - Determination of Sulfur Dioxide Emissions from Stationary Sources; and Method 25A or 25B - Determination of Total Gaseous Organic Concentration using a Flame Ionization Analyzer or Nondispersive Infrared Analyzer. Use alternate stack test methods only with the prior approval of the Office of Environmental Assessment. As required by LAC 33:III.913, provide necessary sampling ports in stacks or ducts and such other safe and proper sampling and testing facilities for proper determination of the emission limits. Other methods in 40 CFR 60.106 may be utilized for the above referenced methods if applicable. If CEMS are installed then the permittee shall use appropriate Specifications of 40 CFR 60, Appendix B and Quality Assurance Procedures of 40 CFR 60, Appendix F to show compliance.
54	[LAC 33:III.509]	Carbon monoxide <= 0.02 lb/MMBTU, 30-day average, using refinery fuel gas. [PSD-LA-719(M-1)]. [LAC 33:III.509, 40 CFR 52.21] Which Months: All Year Statistical Basis: Thirty-day average
55	[LAC 33:III.509]	Hydrogen sulfide <= 25 ppmv, annual average (based on H2S). Total sulfur content based on H2S and other compunds shall not exceed 40 ppmv. [PSD-LA-719(M-1)]. [LAC 33:III.509, 40 CFR 52.21] Which Months: All Year Statistical Basis: Annual average
56	[LAC 33:III.509]	VOC, Total <= 0.0015 lb/MMBTU, 3-hour average. [PSD-LA-719(M-1)]. [LAC 33:III.509, 40 CFR 52.21] Which Months: All Year Statistical Basis: Three-hour average

EQT 0189 5-08 - GME Naphtha Hydrotreater Reactor Charge Heater

57	[40 CFR 52.21]	Carbon monoxide <= 0.04 lb/MMBTU, 30-day average, using refinery fuel gas. [PSD-LA-719(M-1)]. [40 CFR 52.21, LAC 33:III.509] Which Months: All Year Statistical Basis: Thirty-day average

[redacted]9 5-08 - GME Naphtha Hydrotreater Reactor Charge Heater

58	[40 CFR 52.21]	Particulate matter (10 microns or less) <= 0.0075 lb/MMBTU, 3-hour average, with optimum burner design and utilization of refinery fuel gas. [PSD-LA-719(M-1)]. [40 CFR 52.21, LAC 33:III.509] Which Months: All Year Statistical Basis: Three-hour average
59	[40 CFR 52.21]	Nitrogen dioxide <= 0.03 lb/MMBTU annual average. Equipped with Ultra Low NOX Burners (UNLB) without air preheat. [PSD-LA-719(M-1)]. [40 CFR 52.21, LAC 33:III.509] Which Months: All Year Statistical Basis: Annual average
60	[40 CFR 60.104(a)(1)]	Fuel gas: Hydrogen sulfide <= 0.1 gr/dscf (230 mg/dscm) or less than 160 ppm on a three hour rolling average. Subpart J. [40 CFR 60.104(a)(1)] Which Months: All Year Statistical Basis: Three-hour rolling average
61	[40 CFR 60.105(a)(4)]	Hydrogen sulfide monitored by continuous emission monitor (CEM) continuously. Monitor the H2S in fuel gases before being burned in any fuel gas combustion device. Subpart J. [40 CFR 60.105(a)(4)] Which Months: All Year Statistical Basis: None specified
62	[40 CFR 60.106(a)]	Use as reference methods and procedures the test methods in 40 CFR 60 appendix A or other methods and procedures as specified in 40 CFR 60.106, except as provided in 40 CFR 60.8(b), in conducting the performance tests required in 40 CFR 60.8. Subpart J. [40 CFR 60.106(a)]
63	[40 CFR 60.106]	Determine compliance with standards using the test methods and procedures specified in 40 CFR 60.106(a) through (k). Subpart J.
64	[40 CFR 60.107]	Shall comply with all the applicable requirements of reporting and recordkeeping as specified in 40 CFR 60.107.
65	[LAC 33:III.1101.B]	Opacity <= 20 percent, except during the cleaning of a fire box or building of a new fire, soot blowing or lancing, charging of an incinerator, equipment changes, ash removal or rapping of precipitators, which may have an opacity in excess of 20 percent for not more than one six-minute period in any 60 consecutive minutes. Which Months: All Year Statistical Basis: None specified
66	[LAC 33:III.1313.C]	Total suspended particulate <= 0.6 lb/MMBTU of heat input. Which Months: All Year Statistical Basis: None specified
67	[LAC 33:III.1503.C]	Compliance with all the applicable requirements of NSPS, 40 CFR 60, Subpart J has been determined to be compliance in accordance with LAC 33:III.1503.
68	[LAC 33:III.501.C.6]	Conduct a performance/emissions test: Due within 180 days after the startup of the unit. The stack test's purpose is to demonstrate compliance with the emission limits of this permit. Test methods and procedures shall be in accordance with New Source Performance Standards, 40 CFR 60, Appendix A, Method 7E - Determination of Nitrogen Oxides Emissions from Stationary Sources; Method 10 - Determination of Carbon Monoxide Emissions from Stationary Sources; Method 5 - Determination of Particulate Emissions from Stationary Sources; Method 6 - Determination of Sulfur Dioxide Emissions from Stationary Sources; and Method 25A or 25B - Determination of Total Gaseous Organic Concentration using a Flame Ionization Analyzer or Nondispersive Infrared Analyzer. Use alternate stack test methods only with the prior approval of the Office of Environmental Assessment. As required by LAC 33:III.913, provide necessary sampling ports in stacks or ducts and such other safe and proper sampling and testing facilities for proper determination of the emission limits. Other methods in 40 CFR 60.106 may be utilized for the above referenced methods if applicable. If CEMS are installed then the permittee shall use appropriate Specifications of 40 CFR 60, Appendix B and Quality Assurance Procedures of 40 CFR 60, Appendix F to show compliance.
69	[LAC 33:III.509]	Nitrogen oxides <= 0.05 lb/MMBTU. These limits shall apply when the heater is operating between 50 to 60 % capacity. In no case the total NOx emissions shall exceed 6.50 tons per year. Which Months: All Year Statistical Basis: Three-hour rolling average

EQT 0189 5-08 - GME Naphtha Hydrotreater Reactor Charge Heater

70	[LAC 33:III.509]	VOC, Total <= 0.0015 lb/MMBTU, 3-hour average. [PSD-LA-719(M-1)]. [LAC 33:III.509, 40 CFR 52.21] Which Months: All Year Statistical Basis: Three-hour average
71	[LAC 33:III.509]	Nitrogen oxides <= 0.06 lb/MMBTU. These limits shall apply when the heater is operating at 50 % or less capacity. In no case the total NOx emissions shall exceed 6.50 tons per year. Which Months: All Year Statistical Basis: Three-hour rolling average
72	[LAC 33:III.509]	Hydrogen sulfide <= 25 ppmv, annual average (based on H2S). Total sulfur content based on H2S and other compunds shall not exceed 40 ppmv. [PSD-LA-719(M-1)]. [LAC 33:III.509, 40 CFR 52.21] Which Months: All Year Statistical Basis: Annual average
73	[LAC 33:III.509]	Nitrogen oxides <= 0.04 lb/MMBTU. These limits shall apply when the heater is operating between 60 to 75 % capacity. In no case the total NOx emissions shall exceed 6.50 tons per year. Which Months: All Year Statistical Basis: Three-hour rolling average

EQT 0190 6-08 - GME Naphtha Hydrotreater Stripper Reboiler Heater

74	[40 CFR 52.21]	Particulate matter (10 microns or less) <= 0.0075 lb/MMBTU, 3-hour average, with optimum burner design and utilization of refinery fuel gas. [PSD-LA-719(M-1)]. [40 CFR 52.21, LAC 33:III.509] Which Months: All Year Statistical Basis: Three-hour average
75	[40 CFR 60.104(a)(1)]	Fuel gas: Hydrogen sulfide <= 0.1 gr/dscf (230 mg/dscm) or less than 160 ppm on a three hour rolling average. Subpart J. [40 CFR 60.104(a)(1)] Which Months: All Year Statistical Basis: Three-hour rolling average
76	[40 CFR 60.105(a)(4)]	Hydrogen sulfide monitored by continuous emission monitor (CEM) continuously. Monitor the H2S in fuel gases before being burned in any fuel gas combustion device. Subpart J. [40 CFR 60.105(a)(4)] Which Months: All Year Statistical Basis: None specified
77	[40 CFR 60.106(a)]	Use as reference methods and procedures the test methods in 40 CFR 60 appendix A or other methods and procedures as specified in 40 CFR 60.106, except as provided in 40 CFR 60.8(b), in conducting the performance tests required in 40 CFR 60.8. Subpart J. [40 CFR 60.106(a)]
78	[40 CFR 60.106]	Determine compliance with standards using the test methods and procedures specified in 40 CFR 60.106(a) through (k). Subpart J.
79	[40 CFR 60.107]	Shall comply with all the applicable requirements of reporting and recordkeeping as specified in 40 CFR 60.107.
80	[LAC 33:III.1101.B]	Opacity <= 20 percent, except during the cleaning of a fire box or building of a new fire, soot blowing or lancing, charging of an incinerator, equipment changes, ash removal or rapping of precipitators, which may have an opacity in excess of 20 percent for not more than one six-minute period in any 60 consecutive minutes. Which Months: All Year Statistical Basis: None specified
81	[LAC 33:III.1313.C]	Total suspended particulate <= 0.6 lb/MMBTU of heat input. Which Months: All Year Statistical Basis: None specified
82	[LAC 33:III.1503.C]	Compliance with all the applicable requirements of NSPS, 40 CFR 60, Subpart J has been determined to be compliance in accordance with LAC 33:III.1503.

EQT 0190 6-08 - GME Naphtha Hydrotreater Stripper Reboiler Heater

83 [LAC 33:III.501.C.6]
Conduct a performance/emissions test: Due within 180 days after the startup of the unit. The stack test's purpose is to demonstrate compliance with the emission limits of this permit. Test methods and procedures shall be in accordance with New Source Performance Standards, 40 CFR 60, Appendix A, Method 7E - Determination of Nitrogen Oxides Emissions from Stationary Sources; Method 10 - Determination of Carbon Monoxide Emissions from Stationary Sources; Method 5 - Determination of Particulate Emissions from Stationary Sources; Method 6 - Determination of Sulfur Dioxide Emissions from Stationary Sources; and Method 25A or 25B - Determination of Total Gaseous Organic Concentration using a Flame Ionization Analyzer or Nondispersive Infrared Analyzer. Use alternate stack test methods only with the prior approval of the Office of Environmental Assessment. As required by LAC 33:III.913, provide necessary sampling ports in stacks or ducts and such other safe and proper sampling and testing facilities for proper determination of the emission limits. Other methods in 40 CFR 60.106 may be utilized for the above referenced methods if applicable. If CEMS are installed then the permittee shall use appropriate Specifications of 40 CFR 60, Appendix B and Quality Assurance Procedures of 40 CFR 60, Appendix F to show compliance.

84 [LAC 33:III.509]
Carbon monoxide <= 0.02 lb/MMBTU, 30-day average, using refinery fuel gas. [PSD-LA-719(M-1)]. [LAC 33:III.509, 40 CFR 52.21]
Which Months: All Year Statistical Basis: Thirty-day average

85 [LAC 33:III.509]
VOC, Total <= 0.0015 lb/MMBTU, 3-hour average. [PSD-LA-719(M-1)]. [LAC 33:III.509, 40 CFR 52.21]
Which Months: All Year Statistical Basis: Three-hour average

86 [LAC 33:III.509]
Hydrogen sulfide <= 25 ppmv, annual average (based on H2S). Total sulfur content based on H2S and other compunds shall not exceed 40 ppmv. [PSD-LA-719(M-1)]. [LAC 33:III.509, 40 CFR 52.21]
Which Months: All Year Statistical Basis: Annual average

87 [LAC 33:III.509]
Nitrogen dioxide <= 0.03 lb/MMBTU annual average. Equipped with Ultra Low NOX Burners (UNLB) without air preheat. [PSD-LA-719(M-1)]. [40 CFR 52.21, LAC 33:III.509]
Which Months: All Year Statistical Basis: Annual average

EQT 0191 7A-08 - GME Platformer Heater Cell No. 1

88 [40 CFR 52.21]
Carbon monoxide <= 0.02 lb/MMBTU, 30-day average, using refinery fuel gas. [PSD-LA-719(M-1)]. [40 CFR 52.21, LAC 33:III.509]
Which Months: All Year Statistical Basis: Thirty-day average

89 [40 CFR 52.21]
Particulate matter (10 microns or less) <= 0.0075 lb/MMBTU, 3-hour average, with optimum burner design and utilization of refinery fuel gas. [PSD-LA-719(M-1)]. [40 CFR 52.21, LAC 33:III.509]
Which Months: All Year Statistical Basis: Three-hour average

90 [40 CFR 60.104(a)(1)]
Fuel gas: Hydrogen sulfide <= 0.1 gr/dscf (230 mg/dscm) or less than 160 ppm on a three hour rolling average. Subpart J. [40 CFR 60.104(a)(1)]
Which Months: All Year Statistical Basis: Three-hour rolling average

91 [40 CFR 60.105(a)(4)]
Hydrogen sulfide monitored by continuous emission monitor (CEM) continuously. Monitor the H2S in fuel gases before being burned in any fuel gas combustion device. Subpart J. [40 CFR 60.105(a)(4)]
Which Months: All Year Statistical Basis: None specified

92 [40 CFR 60.106(a)]
Use as reference methods and procedures the test methods in 40 CFR 60 appendix A or other methods and procedures as specified in 40 CFR 60.106, except as provided in 40 CFR 60.8(b), in conducting the performance tests required in 40 CFR 60.8. Subpart J. [40 CFR 60.106(a)]

93 [40 CFR 60.106]
Determine compliance with standards using the test methods and procedures specified in 40 CFR 60.106(a) through (k). Subpart J.

EQT 0191 7A-08 - GME Platformer Heater Cell No. 1

94	[40 CFR 60.107]	Shall comply with all the applicable requirements of reporting and recordkeeping as specified in 40 CFR 60.107.
95	[LAC 33:III.1101.B]	Opacity <= 20 percent, except during the cleaning of a fire box or building of a new fire, soot blowing or lancing, charging of an incinerator, equipment changes, ash removal or rapping of precipitators, which may have an opacity in excess of 20 percent for not more than one six-minute period in any 60 consecutive minutes. Which Months: All Year Statistical Basis: None specified
96	[LAC 33:III.1313.C]	Total suspended particulate <= 0.6 lb/MMBTU of heat input. Which Months: All Year Statistical Basis: None specified
97	[LAC 33:III.1503.C]	Compliance with all the applicable requirements of NSPS, 40 CFR 60, Subpart J has been determined to be compliance in accordance with LAC 33:III.1503.
98	[LAC 33:III.501.C.6]	Conduct a performance/emissions test: Due within 180 days after the startup of the unit. The stack test's purpose is to demonstrate compliance with the emission limits of this permit. Test methods and procedures shall be in accordance with New Source Performance Standards, 40 CFR 60, Appendix A, Method 7E - Determination of Nitrogen Oxides Emissions from Stationary Sources; Method 10 - Determination of Carbon Monoxide Emissions from Stationary Sources; Method 5 - Determination of Particulate Emissions from Stationary Sources; Method 6 - Determination of Sulfur Dioxide Emissions from Stationary Sources; and Method 25A or 25B - Determination of Total Gaseous Organic Concentration using a Flame Ionization Analyzer or Nondispersive Infrared Analyzer. Use alternate stack test methods only with the prior approval of the Office of Environmental Assessment. As required by LAC 33:III.913, provide necessary sampling ports in stacks or ducts and such other safe and proper sampling and testing facilities for proper determination of the emission limits. Other methods in 40 CFR 60.106 may be utilized for the above referenced methods if applicable. If CEMS are installed then the permittee shall use appropriate Specifications of 40 CFR 60, Appendix B and Quality Assurance Procedures of 40 CFR 60, Appendix F to show compliance.
99	[LAC 33:III.509]	Nitrogen dioxide <= 0.03 lb/MMBTU annual average. Equipped with Ultra Low NOX Burners (UNLB) without air preheat. [PSD-LA-719(M-1)]. [40 CFR 52.21, LAC 33:III.509] Which Months: All Year Statistical Basis: Annual average
100	[LAC 33:III.509]	Hydrogen sulfide <= 25 ppmv, annual average (based on H2S). Total sulfur content based on H2S and other compunds shall not exceed 40 ppmv. [PSD-LA-719(M-1)]. [LAC 33:III.509, 40 CFR 52.21] Which Months: All Year Statistical Basis: Annual average
101	[LAC 33:III.509]	VOC, Total <= 0.0015 lb/MMBTU, 3-hour average. [PSD-LA-719(M-1)]. [LAC 33:III.509, 40 CFR 52.21] Which Months: All Year Statistical Basis: Three-hour average

EQT 0192 7B-08 - GME Platformer Heater Cell No. 2

102	[40 CFR 52.21]	Particulate matter (10 microns or less) <= 0.0075 lb/MMBTU, 3-hour average, with optimum burner design and utilization of refinery fuel gas. [PSD-LA-719(M-1)]. [40 CFR 52.21, LAC 33:III.509] Which Months: All Year Statistical Basis: Three-hour average
103	[40 CFR 60.104(a)(1)]	Fuel gas: Hydrogen sulfide <= 0.1 gr/dscf (230 mg/dscm) or less than 160 ppm on a three hour rolling average. Subpart J. [40 CFR 60.104(a)(1)] Which Months: All Year Statistical Basis: Three-hour rolling average

EQT 0192 7B-08 - GME Platformer Heater Cell No. 2

104	[40 CFR 60.105(a)(4)]	Hydrogen sulfide monitored by continuous emission monitor (CEM) continuously. Monitor the H2S in fuel gases before being burned in any fuel gas combustion device. Subpart J. [40 CFR 60.105(a)(4)] Which Months: All Year Statistical Basis: None specified
105	[40 CFR 60.106(a)]	Use as reference methods and procedures the test methods in 40 CFR 60 appendix A or other methods and procedures as specified in 40 CFR 60.106, except as provided in 40 CFR 60.8(b), in conducting the performance tests required in 40 CFR 60.8. Subpart J. [40 CFR 60.106(a)]
106	[40 CFR 60.106]	Determine compliance with standards using the test methods and procedures specified in 40 CFR 60.106(a) through (k). Subpart J.
107	[40 CFR 60.107]	Shall comply with all the applicable requirements of reporting and recordkeeping as specified in 40 CFR 60.107.
108	[LAC 33:III.1101.B]	Opacity <= 20 percent, except during the cleaning of a fire box or building of a new fire, soot blowing or lancing, charging of an incinerator, equipment changes, ash removal or rapping of precipitators, which may have an opacity in excess of 20 percent for not more than one six-minute period in any 60 consecutive minutes. Which Months: All Year Statistical Basis: None specified
109	[LAC 33:III.1313.C]	Total suspended particulate <= 0.6 lb/MMBTU of heat input. Which Months: All Year Statistical Basis: None specified
110	[LAC 33:III.1503.C]	Compliance with all the applicable requirements of NSPS, 40 CFR 60, Subpart J has been determined to be compliance in accordance with LAC 33:III.1503.
111	[LAC 33:III.501.C.6]	Conduct a performance/emissions test: Due within 180 days after the startup of the unit. The stack test's purpose is to demonstrate compliance with the emission limits of this permit. Test methods and procedures shall be in accordance with New Source Performance Standards, 40 CFR 60, Appendix A, Method 7E - Determination of Nitrogen Oxides Emissions from Stationary Sources; Method 10 - Determination of Carbon Monoxide Emissions from Stationary Sources; Method 5 - Determination of Particulate Emissions from Stationary Sources; Method 6 - Determination of Sulfur Dioxide Emissions from Stationary Sources; and Method 25A or 25B - Determination of Total Gaseous Organic Concentration using a Flame Ionization Analyzer or Nondispersive Infrared Analyzer. Use alternate stack test methods only with the prior approval of the Office of Environmental Assessment. As required by LAC 33:III.913, provide necessary sampling ports in stacks or ducts and such other safe and proper sampling and testing facilities for proper determination of the emission limits. Other methods in 40 CFR 60.106 may be utilized for the above referenced methods if applicable. If CEMS are installed then the permittee shall use appropriate Specifications of 40 CFR 60, Appendix B and Quality Assurance Procedures of 40 CFR 60, Appendix F to show compliance.
112	[LAC 33:III.509]	VOC, Total <= 0.0015 lb/MMBTU, 3-hour average. [PSD-LA-719(M-1)]. [LAC 33:III.509, 40 CFR 52.21] Which Months: All Year Statistical Basis: Three-hour average
113	[LAC 33:III.509]	Nitrogen dioxide <= 0.03 lb/MMBTU annual average. Equipped with Ultra Low NOX Burners (UNLB) without air preheat. [PSD-LA-719(M-1)]. [40 CFR 52.21, LAC 33:III.509] Which Months: All Year Statistical Basis: Annual average
114	[LAC 33:III.509]	Hydrogen sulfide <= 25 ppmv, annual average (based on H2S). Total sulfur content based on H2S and other compunds shall not exceed 40 ppmv. [PSD-LA-719(M-1)]. [LAC 33:III.509, 40 CFR 52.21] Which Months: All Year Statistical Basis: Annual average
115	[LAC 33:III.509]	Carbon monoxide <= 0.02 lb/MMBTU, 30-day average, using refinery fuel gas. [PSD-LA-719(M-1)]. [LAC 33:III.509, 40 CFR 52.21] Which Months: All Year Statistical Basis: Thirty-day average

EQT 0193 7C-08 - GME Platformer Heater Cell No. 3

116	[40 CFR 52.21]	Particulate matter (10 microns or less) <= 0.0075 lb/MMBTU, 3-hour average, with optimum burner design and utilization of refinery fuel gas. [PSD-LA-719(M-1)]. [40 CFR 52.21, LAC 33:III.509] Which Months: All Year Statistical Basis: Three-hour average
117	[40 CFR 52.21]	Nitrogen dioxide <= 0.03 lb/MMBTU annual average. Equipped with Ultra Low NOX Burners (UNLB) without air preheat. [PSD-LA-719(M-1)]. [40 CFR 52.21, LAC 33:III.509] Which Months: All Year Statistical Basis: Annual average
118	[40 CFR 52.21]	Carbon monoxide <= 0.02 lb/MMBTU, 30-day average, using refinery fuel gas. [PSD-LA-719(M-1)]. [40 CFR 52.21, LAC 33:III.509] Which Months: All Year Statistical Basis: Thirty-day average
119	[40 CFR 60.104(a)(1)]	Fuel gas: Hydrogen sulfide <= 0.1 gr/dscf (230 mg/dscm) or less than 160 ppm on a three hour rolling average. Subpart J. [40 CFR 60.104(a)(1)] Which Months: All Year Statistical Basis: Three-hour rolling average
120	[40 CFR 60.105(a)(4)]	Hydrogen sulfide monitored by continuous emission monitor (CEM) continuously. Monitor the H2S in fuel gases before being burned in any fuel gas combustion device. Subpart J. [40 CFR 60.105(a)(4)] Which Months: All Year Statistical Basis: None specified
121	[40 CFR 60.106(a)]	Use as reference methods and procedures the test methods in 40 CFR 60 appendix A or other methods and procedures as specified in 40 CFR 60.106, except as provided in 40 CFR 60.8(b), in conducting the performance tests required in 40 CFR 60.8. Subpart J. [40 CFR 60.106(a)]
122	[40 CFR 60.106]	Determine compliance with standards using the test methods and procedures specified in 40 CFR 60.106(a) through (k). Subpart J.
123	[40 CFR 60.107]	Shall comply with all the applicable requirements of reporting and recordkeeping as specified in 40 CFR 60.107.
124	[LAC 33:III.1101.B]	Opacity <= 20 percent, except during the cleaning of a fire box or building of a new fire, soot blowing or lancing, charging of an incinerator, equipment changes, ash removal or rapping of precipitators, which may have an opacity in excess of 20 percent for not more than one six-minute period in any 60 consecutive minutes. Which Months: All Year Statistical Basis: None specified
125	[LAC 33:III.1313.C]	Total suspended particulate <= 0.6 lb/MMBTU of heat input. Which Months: All Year Statistical Basis: None specified
126	[LAC 33:III.1503.C]	Compliance with all the applicable requirements of NSPS, 40 CFR 60, Subpart J has been determined to be compliance in accordance with LAC 33:III.1503.
127	[LAC 33:III.501.C.6]	Conduct a performance/emissions test: Due within 180 days after the startup of the unit. The stack test's purpose is to demonstrate compliance with the emission limits of this permit. Test methods and procedures shall be in accordance with New Source Performance Standards, 40 CFR 60, Appendix A, Method 7E - Determination of Nitrogen Oxides Emissions from Stationary Sources; Method 10 - Determination of Carbon Monoxide Emissions from Stationary Sources; Method 5 - Determination of Particulate Emissions from Stationary Sources; Method 6 - Determination of Sulfur Dioxide Emissions from Stationary Sources; and Method 25A or 25B - Determination of Total Gaseous Organic Concentration using a Flame Ionization Analyzer or Nondispersive Infrared Analyzer. Use alternate stack test methods only with the prior approval of the Office of Environmental Assessment. As required by LAC 33:III.913, provide necessary sampling ports in stacks or ducts and such other safe and proper sampling and testing facilities for proper determination of the emission limits. Other methods in 40 CFR 60.106 may be utilized for the above referenced methods if applicable. If CEMS are installed then the permittee shall use appropriate Specifications of 40 CFR 60, Appendix B and Quality Assurance Procedures of 40 CFR 60, Appendix F to show compliance.

EQT 0193 7C-08 - GME Platformer Heater Cell No. 3

128	[LAC 33:III.509]	VOC, Total <= 0.0015 lb/MMBTU, 3-hour average. [PSD-LA-719(M-1)]. [LAC 33:III.509, 40 CFR 52.21] Which Months: All Year Statistical Basis: Three-hour average
129	[LAC 33:III.509]	Hydrogen sulfide <= 25 ppmv, annual average (based on H2S). Total sulfur content based on H2S and other compunds shall not exceed 40 ppmv. [PSD-LA-719(M-1)]. [LAC 33:III.509, 40 CFR 52.21] Which Months: All Year Statistical Basis: Annual average

EQT 0195 9-08 - GME KHT Reacter Charge Heater

130	[40 CFR 52.21]	Carbon monoxide <= 0.04 lb/MMBTU, 30-day average, using refinery fuel gas. [PSD-LA-719(M-1)]. [40 CFR 52.21, LAC 33:III.509] Which Months: All Year Statistical Basis: Thirty-day average
131	[40 CFR 52.21]	Particulate matter (10 microns or less) <= 0.0075 lb/MMBTU, 3-hour average, with optimum burner design and utilization of refinery fuel gas. [PSD-LA-719(M-1)]. [40 CFR 52.21, LAC 33:III.509] Which Months: All Year Statistical Basis: Three-hour average
132	[40 CFR 60.102a(g)(1)(ii)]	Fuel gas: Hydrogen sulfide <= 162 ppmv (230 mg/dscm) determined hourly on a 3-hour rolling average and less than 60 ppmv determined daily on a 365 successive calendar day rolling average. Subpart Ja. [40 CFR 60.102a(g)(1)(ii)] Which Months: All Year Statistical Basis: Three-hour rolling average
133	[40 CFR 60.102a(g)(2)]	Nitrogen oxides <= 40 ppmdv @ 0% excess air or 0.035 lb/MM BTU determined daily on a 365 successive operating day rolling average basis. Subpart Ja. [40 CFR 60.102a(g)(2)] Which Months: All Year Statistical Basis: Rolling average
134	[40 CFR 60.104a(j)]	Determine compliance with standards using the test methods and procedures specified in 40 CFR 60.104a(j). Subpart Ja. [40 CFR 60.104a(j)]
135	[40 CFR 60.107a(a)(2)]	Hydrogen sulfide monitored by continuous emission monitor (CEM) continuously. Monitor the H2S in fuel gases before being burned in any fuel gas combustion device. Subpart Ja. [40 CFR 60.107a(a)(2)] Which Months: All Year Statistical Basis: None specified
136	[40 CFR 60.107a]	Shall comply with all the applicable requirements of monitoring, reporting and recordkeeping as specified in 40 CFR 60.107a. Subpart Ja. [40 CFR 60.107a, 40 CFR 60.108a]
137	[LAC 33:III.1101.B]	Opacity <= 20 percent, except during the cleaning of a fire box or building of a new fire, soot blowing or lancing, charging of an incinerator, equipment changes, ash removal or rapping of precipitators, which may have an opacity in excess of 20 percent for not more than one six-minute period in any 60 consecutive minutes. Which Months: All Year Statistical Basis: None specified
138	[LAC 33:III.1313.C]	Total suspended particulate <= 0.6 lb/MMBTU of heat input. Which Months: All Year Statistical Basis: None specified
139	[LAC 33:III.1503.C]	Compliance with all the applicable requirements of NSPS, 40 CFR 60, Subpart Ja has been determined to be compliance in accordance with LAC 33:III.1503.

EQT 0195 9-08 - GME KHT Reacter Charge Heater

140	[LAC 33:III.501.C.6]	Conduct a performance/emissions test: Due within 180 days after the startup of the unit. The stack test's purpose is to demonstrate compliance with the emission limits of this permit. Test methods and procedures shall be in accordance with New Source Performance Standards, 40 CFR 60, Appendix A, Method 7E - Determination of Nitrogen Oxides Emissions from Stationary Sources; Method 10 - Determination of Carbon Monoxide Emissions from Stationary Sources; Method 5 - Determination of Particulate Emissions from Stationary Sources; Method 6 - Determination of Sulfur Dioxide Emissions from Stationary Sources; and Method 25A or 25B - Determination of Total Gaseous Organic Concentration using a Flame Ionization Analyzer or Nondispersive Infrared Analyzer. Use alternate stack test methods only with the prior approval of the Office of Environmental Assessment. As required by LAC 33:III.913, provide necessary sampling ports in stacks or ducts and such other safe and proper sampling and testing facilities for proper determination of the emission limits. Other methods in 40 CFR 60.106 may be utilized for the above referenced methods if applicable. If CEMS are installed then the permittee shall use appropriate Specifications of 40 CFR 60, Appendix B and Quality Assurance Procedures of 40 CFR 60, Appendix F to show compliance.
141	[LAC 33:III.509]	Nitrogen oxides <= 0.06 lb/MMBTU. These limits shall apply when the heater is operating at 50 % or less capacity. In no case the total NOx emissions shall exceed 7.76 tons per year. Which Months: All Year Statistical Basis: Three-hour rolling average
142	[LAC 33:III.509]	Nitrogen dioxide <= 0.03 lb/MMBTU annual average. Equipped with Ultra Low NOX Burners (UNLB) without air preheat. [PSD-LA-719(M-1)]. [LAC 33:III.509, 40 CFR 52.21] Which Months: All Year Statistical Basis: Annual average
143	[LAC 33:III.509]	Nitrogen oxides <= 0.05 lb/MMBTU. These limits shall apply when the heater is operating between 50 to 60 % capacity. In no case the total NOx emissions shall exceed 7.76 tons per year. Which Months: All Year Statistical Basis: Three-hour rolling average
144	[LAC 33:III.509]	Nitrogen oxides <= 0.04 lb/MMBTU. These limits shall apply when the heater is operating between 60 to 75 % capacity. In no case the total NOx emissions shall exceed 7.76 tons per year. Which Months: All Year Statistical Basis: Three-hour rolling average
145	[LAC 33:III.509]	Hydrogen sulfide <= 25 ppmv, annual average (based on H2S). Total sulfur content based on H2S and other compunds shall not exceed 40 ppmv. [PSD-LA-719(M-1)]. [LAC 33:III.509, 40 CFR 52.21] Which Months: All Year Statistical Basis: Annual average
146	[LAC 33:III.509]	VOC, Total <= 0.0015 lb/MMBTU, 3-hour average. [PSD-LA-719(M-1)]. [LAC 33:III.509, 40 CFR 52.21] Which Months: All Year Statistical Basis: Three-hour average

EQT 0196 10-08 - GME KHT Stripper Reboiler Heater

147	[40 CFR 52.21]	Carbon monoxide <= 0.02 lb/MMBTU, 30-day average, using refinery fuel gas. [PSD-LA-719(M-1)]. [40 CFR 52.21, LAC 33:III.509] Which Months: All Year Statistical Basis: Thirty-day average
148	[40 CFR 52.21]	Particulate matter (10 microns or less) <= 0.0075 lb/MMBTU, 3-hour average, with optimum burner design and utilization of refinery fuel gas. [PSD-LA-719(M-1)]. [40 CFR 52.21, LAC 33:III.509] Which Months: All Year Statistical Basis: Three-hour average

EQT 0196 10-08 - GME KHT Stripper Reboiler Heater

149	[40 CFR 60.102a(g)(1)(ii)]	Fuel gas: Hydrogen sulfide <= 162 ppmv (230 mg/dscm) determined hourly on a 3-hour rolling average and less than 60 ppmv determined daily on a 365 successive calendar day rolling average. Subpart Ja. [40 CFR 60.102a(g)(1)(ii)] Which Months: All Year Statistical Basis: Three-hour rolling average
150	[40 CFR 60.102a(g)(2)]	Nitrogen oxides <= 40 ppmdv @ 0% excess air or 0.035 lb/MM BTU determined daily of a 365 successive operating day rolling average basis. Subpart Ja. [40 CFR 60.102a(g)(2)] Which Months: All Year Statistical Basis: Rolling average
151	[40 CFR 60.104a(j)]	Determine compliance with standards using the test methods and procedures specified in 40 CFR 60.104a(j). Subpart Ja. [40 CFR 60.104a(j)]
152	[40 CFR 60.107a(a)(2)]	Hydrogen sulfide monitored by continuous emission monitor (CEM) continuously. Monitor the H2S in fuel gases before being burned in any fuel gas combustion device. Subpart Ja. [40 CFR 60.107a(a)(2)] Which Months: All Year Statistical Basis: None specified
153	[40 CFR 60.107a]	Shall comply with all the applicable requirements of monitoring, reporting and recordkeeping as specified in 40 CFR 60.107a. Subpart Ja. [40 CFR 60.107a, 40 CFR 60.108]
154	[LAC 33:III.1101.B]	Opacity <= 20 percent, except during the cleaning of a fire box or building of a new fire, soot blowing or lancing, charging of an incinerator, equipment changes, ash removal or rapping of precipitators, which may have an opacity in excess of 20 percent for not more than one six-minute period in any 60 consecutive minutes. Which Months: All Year Statistical Basis: None specified
155	[LAC 33:III.1313.C]	Total suspended particulate <= 0.6 lb/MMBTU of heat input. Which Months: All Year Statistical Basis: None specified
156	[LAC 33:III.1503.C]	Compliance with all the applicable requirements of NSPS, 40 CFR 60, Subpart J has been determined to be compliance in accordance with LAC 33:III.1503.
157	[LAC 33:III.501.C.6]	Conduct a performance/emissions test: Due within 180 days after the startup of the unit. The stack test's purpose is to demonstrate compliance with the emission limits of this permit. Test methods and procedures shall be in accordance with New Source Performance Standards, 40 CFR 60, Appendix A, Method 7E - Determination of Nitrogen Oxides Emissions from Stationary Sources; Method 10 - Determination of Carbon Monoxide Emissions from Stationary Sources; Method 5 - Determination of Particulate Emissions from Stationary Sources; Method 6 - Determination of Sulfur Dioxide Emissions from Stationary Sources; and Method 25A or 25B - Determination of Total Gaseous Organic Concentration using a Flame Ionization Analyzer or Nondispersive Infrared Analyzer. Use alternate stack test methods only with the prior approval of the Office of Environmental Assessment. As required by LAC 33:III.913, provide necessary sampling ports in stacks or ducts and such other safe and proper sampling and testing facilities for proper determination of the emission limits. Other methods in 40 CFR 60.106 may be utilized for the above referenced methods if applicable. If CEMS are installed then the permittee shall use appropriate Specifications of 40 CFR 60, Appendix B and Quality Assurance Procedures of 40 CFR 60, Appendix F to show compliance.
158	[LAC 33:III.509]	Nitrogen dioxide <= 0.03 lb/MMBTU annual average. Equipped with Ultra Low NOX Burners (UNLB) without air preheat. [PSD-LA-719(M-1)]. [LAC 33:III.509, 40 CFR 52.21] Which Months: All Year Statistical Basis: Annual average
159	[LAC 33:III.509]	Hydrogen sulfide <= 25 ppmv, annual average (based on H2S). Total sulfur content based on H2S and other compunds shall not exceed 40 ppmv. [PSD-LA-719(M-1)]. [LAC 33:III.509, 40 CFR 52.21] Which Months: All Year Statistical Basis: Annual average

SPECIFIC REQUIREMENTS

AI ID: 3165 - Marathon Petroleum Co LLC - LA Refining Division - Garyville Refinery
Activity Number: PER20090017
Permit Number: 3039-V6
Air - Title V Regular Permit Minor Mod

EQT 0196 10-08 - GME KHT Stripper Reboiler Heater

160	[LAC 33:III.509]	VOC, Total <= 0.0015 lb/MMBTU, 3-hour average. [PSD-LA-719(M-1)]. [LAC 33:III.509, 40 CFR 52.21] Which Months: All Year Statistical Basis: Three-hour average

EQT 0197 11-08 - GME HCU Train 1 Reactor Charge Heater

161	[40 CFR 52.21]	Particulate matter (10 microns or less) <= 0.0075 lb/MMBTU, 3-hour average, with optimum burner design and utilization of refinery fuel gas. [PSD-LA-719(M-1)]. [40 CFR 52.21, LAC 33:III.509] Which Months: All Year Statistical Basis: Three-hour average
162	[40 CFR 52.21]	Carbon monoxide <= 0.04 lb/MMBTU, 30-day average, using refinery fuel gas. [PSD-LA-719(M-1)]. [40 CFR 52.21, LAC 33:III.509] Which Months: All Year Statistical Basis: Thirty-day average
163	[40 CFR 60.104(a)(1)]	Fuel gas: Hydrogen sulfide <= 0.1 gr/dscf (230 mg/dscm) or less than 160 ppm on a three hour rolling average. Subpart J. [40 CFR 60.104(a)(1)] Which Months: All Year Statistical Basis: Three-hour rolling average
164	[40 CFR 60.105(a)(4)]	Hydrogen sulfide monitored by continuous emission monitor (CEM) continuously. Monitor the H2S in fuel gases before being burned in any fuel gas combustion device. Subpart J. [40 CFR 60.105(a)(4)] Which Months: All Year Statistical Basis: None specified
165	[40 CFR 60.106(a)]	Use as reference methods and procedures the test methods in 40 CFR 60 appendix A or other methods and procedures as specified in 40 CFR 60.106, except as provided in 40 CFR 60.8(b), in conducting the performance tests required in 40 CFR 60.8. Subpart J. [40 CFR 60.106(a)]
166	[40 CFR 60.106]	Determine compliance with standards using the test methods and procedures specified in 40 CFR 60.106(a) through (k). Subpart J.
167	[40 CFR 60.107]	Shall comply with all the applicable requirements of reporting and recordkeeping as specified in 40 CFR 60.107.
168	[LAC 33:III.1101.B]	Opacity <= 20 percent, except during the cleaning of a fire box or building of a new fire, soot blowing or lancing, charging of an incinerator, equipment changes, ash removal or rapping of precipitators, which may have an opacity in excess of 20 percent for not more than one six-minute period in any 60 consecutive minutes. Which Months: All Year Statistical Basis: None specified
169	[LAC 33:III.1313.C]	Total suspended particulate <= 0.6 lb/MMBTU of heat input. Which Months: All Year Statistical Basis: None specified
170	[LAC 33:III.1503.C]	Compliance with all the applicable requirements of NSPS, 40 CFR 60, Subpart J has been determined to be compliance in accordance with LAC 33:III.1503.

EQT 0197 11-08 - GME HCU Train 1 Reactor Charge Heater

171 [LAC 33:III.501.C.6]
Conduct a performance/emissions test: Due within 180 days after the startup of the unit. The stack test's purpose is to demonstrate compliance with the emission limits of this permit. Test methods and procedures shall be in accordance with New Source Performance Standards, 40 CFR 60, Appendix A, Method 7E - Determination of Nitrogen Oxides Emissions from Stationary Sources; Method 10 - Determination of Carbon Monoxide Emissions from Stationary Sources; Method 5 - Determination of Particulate Emissions from Stationary Sources; Method 6 - Determination of Sulfur Dioxide Emissions from Stationary Sources; and Method 25A or 25B - Determination of Total Gaseous Organic Concentration using a Flame Ionization Analyzer or Nondispersive Infrared Analyzer. Use alternate stack test methods only with the prior approval of the Office of Environmental Assessment. As required by LAC 33:III.913, provide necessary sampling ports in stacks or ducts and such other safe and proper sampling and testing facilities for proper determination of the emission limits. Other methods in 40 CFR 60.106 may be utilized for the above referenced methods if applicable. If CEMS are installed then the permittee shall use appropriate Specifications of 40 CFR 60, Appendix B and Quality Assurance Procedures of 40 CFR 60, Appendix F to show compliance.

172 [LAC 33:III.509]
Nitrogen dioxide <= 0.03 lb/MMBTU annual average. Equipped with Ultra Low NOX Burners (UNLB) without air preheat. [PSD-LA-719(M-1)]. [LAC 33:III.509, 40 CFR 52.21]
Which Months: All Year Statistical Basis: Annual average

173 [LAC 33:III.509]
Nitrogen oxides <= 0.05 lb/MMBTU. These limits shall apply when the heater is operating between 50 to 60 % capacity. In no case the total NOx emissions shall exceed 8.94 tons per year.
Which Months: All Year Statistical Basis: Three-hour rolling average

174 [LAC 33:III.509]
Nitrogen oxides <= 0.06 lb/MMBTU. These limits shall apply when the heater is operating at 50 % or less capacity. In no case the total NOx emissions shall exceed 8.94 tons per year.
Which Months: All Year Statistical Basis: Three-hour rolling average

175 [LAC 33:III.509]
Hydrogen sulfide <= 25 ppmv, annual average (based on H2S). Total sulfur content based on H2S and other compunds shall not exceed 40 ppmv. [PSD-LA-719(M-1)]. [LAC 33:III.509, 40 CFR 52.21]
Which Months: All Year Statistical Basis: Annual average

176 [LAC 33:III.509]
VOC, Total <= 0.0015 lb/MMBTU, 3-hour average. [PSD-LA-719(M-1)]. [LAC 33:III.509, 40 CFR 52.21]
Which Months: All Year Statistical Basis: Three-hour average

177 [LAC 33:III.509]
Nitrogen oxides <= 0.04 lb/MMBTU. These limits shall apply when the heater is operating between 60 to 75 % capacity. In no case the total NOx emissions shall exceed 8.94 tons per year.
Which Months: All Year Statistical Basis: Three-hour rolling average

EQT 0198 12-08 - GME HCU Train 2 Reactor Charge Heater

178 [40 CFR 52.21]
Carbon monoxide <= 0.04 lb/MMBTU, 30-day average, using refinery fuel gas. [PSD-LA-719(M-1)]. [40 CFR 52.21, LAC 33:III.509]
Which Months: All Year Statistical Basis: Thirty-day average

179 [40 CFR 52.21]
Particulate matter (10 microns or less) <= 0.0075 lb/MMBTU, 3-hour average, with optimum burner design and utilization of refinery fuel gas. [PSD-LA-719(M-1)]. [40 CFR 52.21, LAC 33:III.509]
Which Months: All Year Statistical Basis: Three-hour average

EQT [redacted]98 12-08 - GME HCU Train 2 Reactor Charge Heater

180	[40 CFR 60.104(a)(1)]	Fuel gas: Hydrogen sulfide <= 0.1 gr/dscf (230 mg/dscm) or less than 160 ppm on a three hour rolling average. Subpart J. [40 CFR 60.104(a)(1)] Which Months: All Year Statistical Basis: Three-hour rolling average
181	[40 CFR 60.105(a)(4)]	Hydrogen sulfide monitored by continuous emission monitor (CEM) continuously. Monitor the H2S in fuel gases before being burned in any fuel gas combustion device. Subpart J. [40 CFR 60.105(a)(4)] Which Months: All Year Statistical Basis: None specified
182	[40 CFR 60.106(a)]	Use as reference methods and procedures the test methods in 40 CFR 60 appendix A or other methods and procedures as specified in 40 CFR 60.106, except as provided in 40 CFR 60.8(b), in conducting the performance tests required in 40 CFR 60.8. Subpart J. [40 CFR 60.106(a)]
183	[40 CFR 60.106]	Determine compliance with standards using the test methods and procedures specified in 40 CFR 60.106(a) through (k). Subpart J.
184	[40 CFR 60.107]	Shall comply with all the applicable requirements of reporting and recordkeeping as specified in 40 CFR 60.107.
185	[LAC 33:III.1101.B]	Opacity <= 20 percent, except during the cleaning of a fire box or building of a new fire, soot blowing or lancing, charging of an incinerator, equipment changes, ash removal or rapping of precipitators, which may have an opacity in excess of 20 percent for not more than one six-minute period in any 60 consecutive minutes. Which Months: All Year Statistical Basis: None specified
186	[LAC 33:III.1313.C]	Total suspended particulate <= 0.6 lb/MMBTU of heat input. Which Months: All Year Statistical Basis: None specified
187	[LAC 33:III.1503.C]	Compliance with all the applicable requirements of NSPS, 40 CFR 60, Subpart J has been determined to be compliance in accordance with LAC 33:III.1503.
188	[LAC 33:III.501.C.6]	Conduct a performance/emissions test: Due within 180 days after the startup of the unit. The stack test's purpose is to demonstrate compliance with the emission limits of this permit. Test methods and procedures shall be in accordance with New Source Performance Standards, 40 CFR 60, Appendix A, Method 7E - Determination of Nitrogen Oxides Emissions from Stationary Sources; Method 10 - Determination of Carbon Monoxide Emissions from Stationary Sources; Method 5 - Determination of Particulate Emissions from Stationary Sources; Method 6 - Determination of Sulfur Dioxide Emissions from Stationary Sources; and Method 25A or 25B - Determination of Total Gaseous Organic Concentration using a Flame Ionization Analyzer or Nondispersive Infrared Analyzer. Use alternate stack test methods only with the prior approval of the Office of Environmental Assessment. As required by LAC 33:III.913, provide necessary sampling ports in stacks or ducts and such other safe and proper sampling and testing facilities for proper determination of the emission limits. Other methods in 40 CFR 60.106 may be utilized for the above referenced methods if applicable. If CEMS are installed then the permittee shall use appropriate Specifications of 40 CFR 60, Appendix B and Quality Assurance Procedures of 40 CFR 60, Appendix F to show compliance.
189	[LAC 33:III.509]	VOC, Total <= 0.0015 lb/MMBTU, 3-hour average. [PSD-LA-719(M-1)]. [LAC 33:III.509, 40 CFR 52.21] Which Months: All Year Statistical Basis: Three-hour average
190	[LAC 33:III.509]	Nitrogen dioxide <= 0.03 lb/MMBTU annual average. Equipped with Ultra Low NOX Burners (UNLB) without air preheat. [PSD-LA-719(M-1)]. [LAC 33:III.509, 40 CFR 52.21] Which Months: All Year Statistical Basis: Annual average
191	[LAC 33:III.509]	Hydrogen sulfide <= 25 ppmv, annual average (based on H2S). Total sulfur content based on H2S and other compunds shall not exceed 40 ppmv. [PSD-LA-719(M-1)]. [LAC 33:III.509, 40 CFR 52.21] Which Months: All Year Statistical Basis: Annual average

EQT 0199 13-08 - GME HCU Fractionator Heater

192	[40 CFR 52.21]	Carbon monoxide <= 0.02 lb/MMBTU, 30-day average, using refinery fuel gas. [PSD-LA-719(M-1)]. [40 CFR 52.21, LAC 33:III.509] Which Months: All Year Statistical Basis: Thirty-day average
193	[40 CFR 52.21]	Particulate matter (10 microns or less) <= 0.0075 lb/MMBTU, 3-hour average, with optimum burner design and utilization of refinery fuel gas. [PSD-LA-719(M-1)]. [40 CFR 52.21, LAC 33:III.509] Which Months: All Year Statistical Basis: Three-hour average
194	[40 CFR 60.104(a)(1)]	Fuel gas: Hydrogen sulfide <= 0.1 gr/dscf (230 mg/dscm) or less than 160 ppm on a three hour rolling average. Subpart J. [40 CFR 60.104(a)(1)] Which Months: All Year Statistical Basis: Three-hour rolling average
195	[40 CFR 60.105(a)(4)]	Hydrogen sulfide monitored by continuous emission monitor (CEM) continuously. Monitor the H2S in fuel gases before being burned in any fuel gas combustion device. Subpart J. [40 CFR 60.105(a)(4)] Which Months: All Year Statistical Basis: None specified
196	[40 CFR 60.106(a)]	Use as reference methods and procedures the test methods in 40 CFR 60 appendix A or other methods and procedures as specified in 40 CFR 60.106, except as provided in 40 CFR 60.8(b), in conducting the performance tests required in 40 CFR 60.8. Subpart J. [40 CFR 60.106(a)]
197	[40 CFR 60.106]	Determine compliance with standards using the test methods and procedures specified in 40 CFR 60.106(a) through (k). Subpart J.
198	[40 CFR 60.107]	Shall comply with all the applicable requirements of reporting and recordkeeping as specified in 40 CFR 60.107.
199	[LAC 33:III.1101.B]	Opacity <= 20 percent, except during the cleaning of a fire box or building of a new fire, soot blowing or lancing, charging of an incinerator, equipment changes, ash removal or rapping of precipitators, which may have an opacity in excess of 20 percent for not more than one six-minute period in any 60 consecutive minutes. Which Months: All Year Statistical Basis: None specified
200	[LAC 33:III.1313.C]	Total suspended particulate <= 0.6 lb/MMBTU of heat input. Which Months: All Year Statistical Basis: None specified
201	[LAC 33:III.1503.C]	Compliance with all the applicable requirements of NSPS, 40 CFR 60, Subpart J has been determined to be compliance in accordance with LAC 33:III.1503.
202	[LAC 33:III.501.C.6]	Conduct a performance/emissions test: Due within 180 days after the startup of the unit. The stack test's purpose is to demonstrate compliance with the emission limits of this permit. Test methods and procedures shall be in accordance with New Source Performance Standards, 40 CFR 60, Appendix A, Method 7E - Determination of Nitrogen Oxides Emissions from Stationary Sources; Method 10 - Determination of Carbon Monoxide Emissions from Stationary Sources; Method 5 - Determination of Particulate Emissions from Stationary Sources; Method 6 - Determination of Sulfur Dioxide Emissions from Stationary Sources; and Method 25A or 25B - Determination of Total Gaseous Organic Concentration using a Flame Ionization Analyzer or Nondispersive Infrared Analyzer. Use alternate stack test methods only with the prior approval of the Office of Environmental Assessment. As required by LAC 33:III.913, provide necessary sampling ports in stacks or ducts and such other safe and proper sampling and testing facilities for proper determination of the emission limits. Other methods in 40 CFR 60.106 may be utilized for the above referenced methods if applicable. If CEMS are installed then the permittee shall use appropriate Specifications of 40 CFR 60, Appendix B and Quality Assurance Procedures of 40 CFR 60, Appendix F to show compliance.
203	[LAC 33:III.509]	Nitrogen dioxide <= 0.03 lb/MMBTU annual average. Equipped with Ultra Low NOX Burners (UNLB) without air preheat. [PSD-LA-719(M-1)]. [LAC 33:III.509, 40 CFR 52.21] Which Months: All Year Statistical Basis: Annual average

EQT 0199 13-08 - GME HCU Fractionator Heater

204	[LAC 33:III.509]	VOC, Total <= 0.0015 lb/MMBTU, 3-hour average. [PSD-LA-719(M-1)]. [LAC 33:III.509, 40 CFR 52.21] Which Months: All Year Statistical Basis: Three-hour average
205	[LAC 33:III.509]	Hydrogen sulfide <= 25 ppmv, annual average (based on H2S). Total sulfur content based on H2S and other compunds shall not exceed 40 ppmv. [PSD-LA-719(M-1)]. [LAC 33:III.509, 40 CFR 52.21] Which Months: All Year Statistical Basis: Annual average

EQT 0201 15-08 - GME Coker Charge Heater

206	[40 CFR 52.21]	Particulate matter (10 microns or less) <= 0.0075 lb/MMBTU, 3-hour average, with optimum burner design and utilization of refinery fuel gas. [PSD-LA-719(M-1)]. [40 CFR 52.21, LAC 33:III.509] Which Months: All Year Statistical Basis: Three-hour average
207	[40 CFR 60.102a(g)(1)(ii)]	Fuel gas: Hydrogen sulfide <= 162 ppmv (230 mg/dscm) determined hourly on a 3-hour rolling average and less than 60 ppmv determined daily on a 365 successive calendar day rolling average. Subpart Ja. [40 CFR 60.102a(g)(1)(ii)] Which Months: All Year Statistical Basis: Three-hour rolling average
208	[40 CFR 60.102a(g)(2)]	Nitrogen oxides <= 40 ppmdv @ 0% excess air or 0.035 lb/MM BTU determined daily on a 365 successive operating day rolling average basis. Subpart Ja. [40 CFR 60.102a(g)(2)] Which Months: All Year Statistical Basis: Rolling average
209	[40 CFR 60.104a(j)]	Determine compliance with standards using the test methods and procedures specified in 40 CFR 60.104a(j). Subpart Ja. [40 CFR 60.104a(j)]
210	[40 CFR 60.107a(a)(2)]	Hydrogen sulfide monitored by continuous emission monitor (CEM) continuously. Monitor the H2S in fuel gases before being burned in any fuel gas combustion device. Subpart Ja. [40 CFR 60.107a(a)(2)] Which Months: All Year Statistical Basis: None specified
211	[40 CFR 60.107a]	Shall comply with all the applicable requirements of monitoring, reporting and recordkeeping as specified in 40 CFR 60.107a. Subpart Ja. [40 CFR 60.107a, 40 CFR 60.108a]
212	[40 CFR 63.643(a)(2)]	Organic HAP >= 98 % reduction by weight, or <= 20 ppmv, on a dry basis, corrected to 3% oxygen, whichever is less stringent, using a control device. Subpart CC. [40 CFR 63.643(a)(2)] Which Months: All Year Statistical Basis: None specified
213	[40 CFR 63.643(b)]	Compliance with all the applicable requirements of NESHAP, 40 CFR 63, Subpart CC is considered compliance with all the applicable requirements of LAC 33:III.Chapter 51. [40 CFR 63.643(b), LAC 33:III.5109.A]
214	[40 CFR 63.643(b)]	Group 1: The vent stream shall be introduced into the flame zone of the burner. Subpart CC. [40 CFR 63.644(a)(3), 40 CFR 63.643(b)]
215	[40 CFR 63.645]	Shall use the test methods referenced in NESHAP, 40 CFR 63, Subpart CC to demonstrate compliance. Subpart CC.
216	[LAC 33:III.1101.B]	Opacity <= 20 percent, except during the cleaning of a fire box or building of a new fire, soot blowing or lancing, charging of an incinerator, equipment changes, ash removal or rapping of precipitators, which may have an opacity in excess of 20 percent for not more than one six-minute period in any 60 consecutive minutes. Which Months: All Year Statistical Basis: None specified
217	[LAC 33:III.1313.C]	Total suspended particulate <= 0.6 lb/MMBTU of heat input. Which Months: All Year Statistical Basis: None specified

EQT 0201 15-08 - GME Coker Charge Heater

218 [LAC 33:III.1503.C] Compliance with all the applicable requirements of NSPS, 40 CFR 60, Subpart Ja has been determined to be compliance in accordance with LAC 33:III.1503. Subpart Ja.

219 [LAC 33:III.2115.K] Equipment/operational data recordkeeping by electronic or hard copy as needed. Maintain records to demonstrate that the criteria are being met for any exemption claimed. Maintain records on the premises for at least two years and make such information available to representatives of the Louisiana Department of Environmental Quality and the Environmental Protection Agency upon request.

220 [LAC 33:III.501.C.6] Conduct a performance/emissions test: Due within 180 days after the startup of the unit. The stack test's purpose is to demonstrate compliance with the emission limits of this permit. Test methods and procedures shall be in accordance with New Source Performance Standards, 40 CFR 60, Appendix A, Method 7E - Determination of Nitrogen Oxides Emissions from Stationary Sources; Method 10 - Determination of Carbon Monoxide Emissions from Stationary Sources; Method 5 - Determination of Particulate Emissions from Stationary Sources; Method 6 - Determination of Sulfur Dioxide Emissions from Stationary Sources; and Method 25A or 25B - Determination of Total Gaseous Organic Concentration using a Flame Ionization Analyzer or Nondispersive Infrared Analyzer. Use alternate stack test methods only with the prior approval of the Office of Environmental Assessment. As required by LAC 33:III.913, provide necessary sampling ports in stacks or ducts and such other safe and proper sampling and testing facilities for proper determination of the emission limits. Other methods in 40 CFR 60.106 may be utilized for the above referenced methods if applicable. If CEMS are installed then the permittee shall use appropriate Specifications of 40 CFR 60, Appendix B and Quality Assurance Procedures of 40 CFR 60, Appendix F to show compliance.

221 [LAC 33:III.509] Nitrogen dioxide <= 0.0125 lb/MMBTU annual average. Equipped with Ultra Low NOX Burners (UNLB) and Selective Catalytic Reduction (SCR) added as voluntary control. [PSD-LA-719(M-1)]. [LAC 33:III.509, 40 CFR 52.21]
Which Months: All Year Statistical Basis: Annual average

222 [LAC 33:III.509] Hydrogen sulfide <= 25 ppmv, annual average (based on H2S). Total sulfur content based on H2S and other compunds shall not exceed 40 ppmv. [PSD-LA-719(M-1)]. [LAC 33:III.509, 40 CFR 52.21]
Which Months: All Year Statistical Basis: Annual average

223 [LAC 33:III.509] Carbon monoxide <= 0.02 lb/MMBTU, 30-day average, using refinery fuel gas. [PSD-LA-719(M-1)]. [LAC 33:III.509, 40 CFR 52.21]
Which Months: All Year Statistical Basis: Thirty-day average

224 [LAC 33:III.509] VOC, Total <= 0.0015 lb/MMBTU, 3-hour average. [PSD-LA-719(M-1)]. [LAC 33:III.509, 40 CFR 52.21]
Which Months: All Year Statistical Basis: Three-hour average

EQT 0202 16-08 - GME Boiler No. 1

225 [40 CFR 52.21] Particulate matter (10 microns or less) <= 0.0075 lb/MMBTU, 3-hour average, with optimum burner design and utilization of refinery fuel gas. [PSD-LA-719(M-1)]. [40 CFR 52.21, LAC 33:III.509]
Which Months: All Year Statistical Basis: Three-hour average

226 [40 CFR 52.21] Carbon monoxide <= 0.02 lb/MMBTU, 30-day average, using refinery fuel gas. [PSD-LA-719(M-1)]. [40 CFR 52.21, LAC 33:III.509]
Which Months: All Year Statistical Basis: Thirty-day average

227 [40 CFR 60.102a(g)(1)(ii)] Fuel gas: Hydrogen sulfide <= 162 ppmv (230 mg/dscm) determined hourly on a 3-hour rolling average and less than 60 ppmv determined daily on a 365 successive calendar day rolling average. Subpart Ja. [40 CFR 60.102a(g)(1)(ii)]
Which Months: All Year Statistical Basis: Three-hour rolling average

228 [40 CFR 60.104a(j)] Determine compliance with standards using the test methods and procedures specified in 40 CFR 60.104a(j). Subpart Ja. [40 CFR 60.104a(j)]

EQT 0202 16-08 - GME Boiler No. 1

229	[40 CFR 60.107a(a)(2)]	Hydrogen sulfide monitored by continuous emission monitor (CEM) continuously. Monitor the H2S in fuel gases before being burned in any fuel gas combustion device. Subpart Ja. [40 CFR 60.107a(a)(2)] Which Months: All Year Statistical Basis: None specified
230	[40 CFR 60.107a]	Shall comply with all the applicable requirements of monitoring, reporting and recordkeeping as specified in 40 CFR 60.107a. Subpart Ja.
231	[40 CFR 60.44b(a)(1)(ii)]	Nitrogen oxides <= 0.20 lb/MMBTU heat input (expressed as NO2), except as provided in 40 CFR 60.44b(k). The nitrogen oxide standards apply at all times, including periods of startup, shutdown, or malfunction. Subpart Db. [40 CFR 60.44b(a)(1)(ii)] Which Months: All Year Statistical Basis: Thirty-day rolling average
232	[LAC 33:III.1101.B]	Opacity <= 20 percent, except during the cleaning of a fire box or building of a new fire, soot blowing or lancing, charging of an incinerator, equipment changes, ash removal or rapping of precipitators, which may have an opacity in excess of 20 percent for not more than one six-minute period in any 60 consecutive minutes. Which Months: All Year Statistical Basis: None specified
233	[LAC 33:III.1313.C]	Total suspended particulate <= 0.6 lb/MMBTU of heat input. Which Months: All Year Statistical Basis: None specified
234	[LAC 33:III.1503.C]	Compliance with all the applicable requirements of NSPS, 40 CFR 60, Subpart J has been determined to be compliance in accordance with LAC 33:III.1503.
235	[LAC 33:III.2115.K]	Equipment/operational data recordkeeping by electronic or hard copy as needed. Maintain records to demonstrate that the criteria are being met for any exemption claimed. Maintain records on the premises for at least two years and make such information available to representatives of the Louisiana Department of Environmental Quality and the Environmental Protection Agency upon request.
236	[LAC 33:III.501.C.6]	Conduct a performance/emissions test: Due within 180 days after the startup of the unit. The stack test's purpose is to demonstrate compliance with the emission limits of this permit. Test methods and procedures shall be in accordance with New Source Performance Standards, 40 CFR 60, Appendix A, Method 7E - Determination of Nitrogen Oxides Emissions from Stationary Sources; Method 10 - Determination of Carbon Monoxide Emissions from Stationary Sources; Method 5 - Determination of Particulate Emissions from Stationary Sources; Method 6 - Determination of Sulfur Dioxide Emissions from Stationary Sources; and Method 25A or 25B - Determination of Total Gaseous Organic Concentration using a Flame Ionization Analyzer or Nondispersive Infrared Analyzer. Use alternate stack test methods only with the prior approval of the Office of Environmental Assessment. As required by LAC 33:III.913, provide necessary sampling ports in stacks or ducts and such other safe and proper sampling and testing facilities for proper determination of the emission limits. Other methods in 40 CFR 60.106 may be utilized for the above referenced methods if applicable. If CEMS are installed then the permittee shall use appropriate Specifications of 40 CFR 60, Appendix B and Quality Assurance Procedures of 40 CFR 60, Appendix F to show compliance.
237	[LAC 33:III.509]	VOC, Total <= 0.0015 lb/MMBTU, 3-hour average. [PSD-LA-719(M-1)]. [LAC 33:III.509, 40 CFR 52.21] Which Months: All Year Statistical Basis: Three-hour average
238	[LAC 33:III.509]	Hydrogen sulfide <= 25 ppmv, annual average (based on H2S). Total sulfur content based on H2S and other compunds shall not exceed 40 ppmv. [PSD-LA-719(M-1)]. [LAC 33:III.509, 40 CFR 52.21] Which Months: All Year Statistical Basis: Annual average

EQT 0202 16-08 - GME Boiler No. 1

239	[LAC 33:III.509]	Permittee shall ensure compliance with the opacity emission limits of this permit by visually inspecting the GME Boiler No. 1, Emission Point 16-08, for opacity on a weekly basis. If visible emissions are detected, then, within three (3) working days, the permittee shall conduct a 6-minute opacity reading in accordance with EPA Reference Method 9. Visible emissions will be considered a violation of the 20% opacity limit. Records of visible emission checks shall include the emission point ID number, the date the visual check was performed, a record if visible emissions were detected, a record and results of any Method 9 testing conducted, and a record of any corrective actions taken. These records shall be kept on site and available for inspection by the Office of Environmental Compliance, Surveillance Division. [LAC 33:III.509, 40 CFR 52.21]
240	[LAC 33:III.509]	Nitrogen dioxide <= 0.04 lb/MMBTU annual average. Equipped with Ultra Low NOX Burners (UNLB) without air preheat. [PSD-LA-719(M-1)]. [LAC 33:III.509, 40 CFR 52.21] Which Months: All Year Statistical Basis: Annual average

EQT 0204 18-08 - GME Thermal Oxidizer No. 1

241	[40 CFR 60.102a(f)(1)(i)]	Sulfur dioxide <= 250 ppmdv @ 0% excess air. Subpart Ja. [40 CFR 60.102a(f)(1)(i), 40 CFR 60.106a(b)] Which Months: All Year Statistical Basis: Twelve-hour average
242	[40 CFR 60.102a(f)(1)(iii)]	Oxygen Enrichment: Shall calculate the applicable emission limit using Equation 1 in 40 CFR 60.102a(f)(1)(iii). [40 CFR 60.102a(f)(1)(iii)]
243	[40 CFR 60.103a(b)]	Work Practice: Shall conduct a root cause analysis of any emission limit or process startup, shutdown, or malfunction that causes a discharge to the atmosphere in excess of 500 lb/day of SO2 and other applicable requirements of 40 CFR 60.103a. Shal investigat. [40 CFR 60.103a(b)]
244	[40 CFR 60.104a(h)]	Determine compliance with standards using the test methods and procedures specified in 40 CFR 60.104a(h). Subpart Ja. [40 CFR 60.104a(h)]
245	[40 CFR 60.106a(1)]	Shall comply with all the applicable requirements of monitoring, reporting and recordkeeping as specified in 40 CFR 60.107a. Subpart Ja. [40 CFR 60.106a(1), 40 CFR 60.108a]
246	[40 CFR 63.1568(a)(3)]	Permittee shall prepare an operation, maintenance, and monitoring plan according to the requirements of NESHAP, 40 CFR 1574(f) and operate at all times according to the procedures in the plan. Subpart UUU. [40 CFR 63.1568(a)(3)]
247	[40 CFR 63.1568(b)(3)]	Establish each applicable site-specific operating limit in 40 CFR 63 Subpart UUU Table 30 that applies to you according to the procedures in 40 CFR 63 Subpart UUU Table 32. Subpart UUU. [40 CFR 63.1568(b)(3)]
248	[40 CFR 63.1568(b)(6)]	Demonstrate initial compliance with the work practice standard in 40 CFR 63.1568(a)(3) by submitting the operation, maintenance, and monitoring plan to DEQ as part of the Notification of Compliance Status. Subpart UUU. [40 CFR 63.1568(b)(6)]
249	[40 CFR 63.1568(b)(7)]	Submit the Notification of Compliance Status containing the results of the initial compliance demonstration according to the requirements in 40 CFR 63.1574. Subpart UUU. [40 CFR 63.1568(b)(7)]
250	[40 CFR 63.1568(b)]	Compliance with all the applicable requirements of NSPS, 40 CFR 60, Subpart J has been determined compliance with all the applicable requirements in accordance with NESHAP, 40 CFR 63.1568(b). Subpart UUU. [40 CFR 63.1568(b)]
251	[40 CFR 63.1568(c)(1)]	Demonstrate continuous compliance with each applicable emission limitation in 40 CFR 63 Subpart UUU Tables 29 and 30 according to the methods specified in 40 CFR 63 Subpart UUU Tables 34 and 35. Subpart UUU. [40 CFR 63.1568(c)(1)]
252	[40 CFR 63.1568(c)(2)]	Demonstrate continuous compliance with the work practice standard in 40 CFR 63.1568(a)(3) by complying with the procedures in the operation, maintenance and monitoring plan. Subpart UUU. [40 CFR 63.1568(c)(2)]

EQT 0204 18-08 - GME Thermal Oxidizer No. 1

253	[40 CFR 63.1569(a)(1)(i)]	Bypass lines (If Option 1 of Table 36 is Applicable): Flow monitored by the regulation's specified method(s) continuously or at least every hour. Use a device (including a flow indicator, level recorder, or electronic valve position monitor) to demonstrate whether flow is present in the bypass line. Install the device at or as near as practical to the entrance to any bypass line. Subpart UUU. [40 CFR 63.1569(a)(1)(i)] Which Months: All Year Statistical Basis: None specified
254	[40 CFR 63.1569(a)(1)(ii)]	Bypass lines (If Option 2 of Table 36 is Applicable): Install a car-seal or lock-and-key device placed on the mechanism by which the bypass device flow position is controlled when the bypass device is in the closed position such the that bypass line valve cannot be opened without breaking the seal or removing the device. Subpart UUU. [40 CFR 63.1569(a)(1)(ii)]
255	[40 CFR 63.1569(a)(1)(iii)]	Bypass lines (If Option 3 of Table 36 is Applicable): Seal the bypass line by installing a solid blind between piping flanges. Subpart UUU. [40 CFR 63.1569(a)(1)(iii)]
256	[40 CFR 63.1569(a)(1)(iv)]	Bypass lines (If Option 4 of Table 36 is Applicable): Vent the bypass line to a control device that meets the appropriate requirements in 40 CFR 63 Subpart UUU. Subpart UUU. [40 CFR 63.1569(a)(1)(iv)]
257	[40 CFR 63.1569(b)(1)]	Bypass lines: If applicable, conduct each performance test according to the requirements in 40 CFR 63.1571 and under the conditions specified in 40 CFR 63 Subpart UUU Table 37. Subpart UUU. [40 CFR 63.1569(b)(1)]
258	[40 CFR 63.1569(b)(2)]	Bypass lines: Demonstrate initial compliance with each applicable work practice standard in 40 CFR 63 Subpart UUU Table 36 according to 40 CFR 63 Subpart UUU Table 38. Subpart UUU. [40 CFR 63.1569(b)(2)]
259	[40 CFR 63.1569(b)(3)]	Demonstrate initial compliance with the work practice standard in 40 CFR 63.1569(a)(3) by submitting the operation, maintenance, and monitoring plan to DEQ as part of the Notification of Compliance Status. Subpart UUU. [40 CFR 63.1569(b)(3)]
260	[40 CFR 63.1569(b)(4)]	Submit the Notification of Compliance Status containing the results of the initial compliance demonstration according to the requirements in 40 CFR 63.1574. Subpart UUU. [40 CFR 63.1569(b)(4)]
261	[40 CFR 63.1569(c)(1)]	Bypass lines: Demonstrate continuous compliance with each applicable work practice standard in 40 CFR 63 Subpart UUU Table 36 according to the requirements in 40 CFR 63 Subpart UUU Table 39. Subpart UUU. [40 CFR 63.1569(c)(1)]
262	[40 CFR 63.1569(c)(2)]	Demonstrate continuous compliance with the work practice standard in 40 CFR 63.1569(a)(2) by complying with the procedures in the operation, maintenance, and monitoring plan. Subpart UUU. [40 CFR 63.1569(c)(2)]
263	[40 CFR 63.1570(a)]	Be in compliance with all of the non-opacity standards in 40 CFR 63 Subpart UUU during the times specified in 40 CFR 63.6(f)(1). Subpart UUU. [40 CFR 63.1570(a)]
264	[40 CFR 63.1570(b)]	If applicable, be in compliance with the opacity and visible emission limits in 40 CFR 63 Subpart UUU during the times specified in 40 CFR 63.6(h)(1). Subpart UUU. [40 CFR 63.1570(b)]
265	[40 CFR 63.1570(c)]	Operate and maintain the affected source, including air pollution control and monitoring equipment, according to the provisions in 40 CFR 63.6(e)(1)(i). Subpart UUU. [40 CFR 63.1570(c)]
266	[40 CFR 63.1570(d)]	Develop and implement a written startup, shutdown, and malfunction plan (SSMP) according to the provisions in 40 CFR 63.6(e)(3). Subpart UUU. [40 CFR 63.1570(d)]
267	[40 CFR 63.1570(f)]	Report each instance in which the applicable emission limitations, operating limits, and work practice standards in 40 CFR 63 Subpart UUU were not met according to the requirements in 40 CFR 63.1575. Subpart UUU. [40 CFR 63.1570(f)]
268	[40 CFR 63.1574(a)]	Submit all of the applicable notifications in 40 CFR 63.6(h), 63.7(b) and (c), 63.8(e), 63.8(f)(4), 63.8(f)(6), and 63.9(b) through (h) by the dates specified, except as allowed in 40 CFR 63.1574(a)(1) through (a)(3). Subpart UUU. [40 CFR 63.1574(a)]
269	[40 CFR 63.1574(d)]	Include the information in 40 CFR 63 Subpart UUU Table 42 in the notification of compliance status report. Subpart UUU. [40 CFR 63.1574(d)]

EQT 0204 18-08 - GME Thermal Oxidizer No. 1

270	[40 CFR 63.1574(f)]	Prepare and implement an operation, maintenance, and monitoring plan for each control system and continuous monitoring system for each affected source. In the plan, detail the operation, maintenance, and monitoring procedures for the facility. Submit the plan to DEQ for review and approval along with the notification of compliance status. Submit any changes to DEQ for review and approval and comply with the plan until the change is approved. Include in each plan, at a minimum, the information specified in 40 CFR 63.1574(f)(2)(i) through (f)(2)(xii). Subpart UUU. [40 CFR 63.1574(f)]
271	[40 CFR 63.1575]	Submit compliance status report: Due semiannually, by the 31st of January and July. Include the information specified in 40 CFR 63.1575(c) through (j), as applicable. Subpart UUU.
272	[40 CFR 63.1576]	Equipment/operational data recordkeeping by electronic or hard copy continuously. Keep records of the information specified in 40 CFR 63.1576(a) through (f). Keep records in a form suitable and readily available for expeditious review according to 40 CFR 63.10(b)(1). Keep each record for 5 years following the date of each occurrence, measurement, maintenance, corrective action, report, or record, as specified in 40 CFR 63.10(b)(1). Keep each record on site for at least 2 years after the date of each occurrence, measurement, maintenance, corrective action, report, or record, according to 40 CFR 63.10(b)(1). The remaining 3 years may be kept off site. Subpart UUU.
273	[LAC 33:III.1101.B]	Opacity <= 20 percent, except during the cleaning of a fire box or building of a new fire, soot blowing or lancing, charging of an incinerator, equipment changes, ash removal or rapping of precipitators, which may have an opacity in excess of 20 percent for not more than one six-minute period in any 60 consecutive minutes. Which Months: All Year Statistical Basis: None specified
274	[LAC 33:III.1311.C]	Opacity <= 20 percent; except emissions may have an average opacity in excess of 20 percent for not more than one six-minute period in any 60 consecutive minutes. Which Months: All Year Statistical Basis: Six-minute average
275	[LAC 33:III.1313.C]	Total suspended particulate <= 0.6 lb/MMBTU of heat input. Which Months: All Year Statistical Basis: None specified
276	[LAC 33:III.1503.C]	Compliance with all the applicable requirements of NSPS, 40 CFR 60, Subpart Ja has been determined to be compliance in accordance with LAC 33:III.1503.
277	[LAC 33:III.509]	Emissions from the TGTU shall be controlled by mainatinaing an optmized air-fuel ratio which is considered as BACT for PM10, CO, NOx, and VOC. NOx and VOC emissions are limited to 0.20 lb/MM BTU and 0.0004 lb/MM BTU, respecticely. [PSD-LA-719(M-1)]. [LAC 33:III.509, 40 CFR 52.21]
278	[LAC 33:III.509]	Degassing of the liquid sulfur product upstream of the Sulfur Pit as H2S is limited to Hydrogen sulfide <= 15 ppmv and recycling of the Sulfur Pit emissions to the SRU inlet. [PSD-LA-719(M-1)]. [LAC 33:III.509, 40 CFR 52.21] Which Months: All Year Statistical Basis: None specified
279	[LAC 33:III.509]	Sulfur dioxide <= 93.41 ppmdv @ 0% excess air at the TGTU exhaust outlet. [PSD-LA-719(M-1)]. [LAC 33:III.509, 40 CFR 52.21] Which Months: All Year Statistical Basis: Annual average
280	[LAC 33:III.5109.A]	Emits Class III toxic air pollutants. No MACT required.

EQT 0205 19-08 - GME Thermal Oxidizer No. 2

281	[40 CFR 52.21]	Sulfur dioxide <= 93.41 ppmdv @ 0% excess air at the TGTU exhaust outlet. [PSD-LA-719(M-1)]. [40 CFR 52.21, LAC 33:III.509] Which Months: All Year Statistical Basis: Annual average

EQT 0205 19-08 - GME Thermal Oxidizer No. 2

282	[40 CFR 60.102a(f)(1)(i)]	Sulfur dioxide <= 250 ppmdv @ 0% excess air. Subpart Ja. [40 CFR 60.102a(f)(1)(i), 40 CFR 60.106a(b)] Which Months: All Year Statistical Basis: Twelve-hour average
283	[40 CFR 60.102a(f)(1)(iii)]	Oxygen Enrichment: Shall calculate the applicable emission limit using Equation 1 in 40 CFR 60.102a(f)(1)(iii). [40 CFR 60.102a(f)(1)(iii)]
284	[40 CFR 60.103a]	Work Practice: Shall conduct a root cause analysis of any emission limit or process startup, shutdown, or malfunction that causes a discharge to the atmosphere in excess of 500 lb/day of SO2 and other applicable requirements of 40 CFR 60.103a. Shal investigat.
285	[40 CFR 60.104a(h)]	Determine compliance with standards using the test methods and procedures specified in 40 CFR 60.104a(h). Subpart Ja. [40 CFR 60.104a(h)]
286	[40 CFR 60.106a(1)]	Shall comply with all the applicable requirements of monitoring, reporting and recordkeeping as specified in 40 CFR 60.107a. Subpart Ja. [40 CFR 60.106a(1), 40 CFR 60.108a]
287	[40 CFR 63.1568(a)(3)]	Permittee shall prepare an operation, maintenance, and monitoring plan according to the requirements of NESHAP, 40 CFR 1574(f) and operate at all times according to the procedures in the plan. Subpart UUU. [40 CFR 63.1568(a)(3)]
288	[40 CFR 63.1568(b)(3)]	Establish each applicable site-specific operating limit in 40 CFR 63 Subpart UUU Table 30 that applies to you according to the procedures in 40 CFR 63 Subpart UUU Table 32. Subpart UUU. [40 CFR 63.1568(b)(3)]
289	[40 CFR 63.1568(b)(6)]	Demonstrate initial compliance with the work practice standard in 40 CFR 63.1568(a)(3) by submitting the operation, maintenance, and monitoring plan to DEQ as part of the Notification of Compliance Status. Subpart UUU. [40 CFR 63.1568(b)(6)]
290	[40 CFR 63.1568(b)(7)]	Submit the Notification of Compliance Status containing the results of the initial compliance demonstration according to the requirements in 40 CFR 63.1574. Subpart UUU. [40 CFR 63.1568(b)(7)]
291	[40 CFR 63.1568(b)]	Compliance with all the applicable requirements of NSPS, 40 CFR 60, Subpart J has been determined compliance with all the applicable requirements in accordance with NESHAP, 40 CFR 63.1568(b). Subpart UUU. [40 CFR 63.1568(b)]
292	[40 CFR 63.1568(c)(1)]	Demonstrate continuous compliance with each applicable emission limitation in 40 CFR 63 Subpart UUU Tables 29 and 30 according to the methods specified in 40 CFR 63 Subpart UUU Tables 34 and 35. Subpart UUU. [40 CFR 63.1568(c)(1)]
293	[40 CFR 63.1568(c)(2)]	Demonstrate continuous compliance with the work practice standard in 40 CFR 63.1568(a)(3) by complying with the procedures in the operation, maintenance and monitoring plan. Subpart UUU. [40 CFR 63.1568(c)(2)]
294	[40 CFR 63.1569(a)(1)(i)]	Bypass lines (If Option 1 of Table 36 is Applicable): Flow monitored by the regulation's specified method(s) continuously or at least every hour. Use a device (including a flow indicator, level recorder, or electronic valve position monitor) to demonstrate whether flow is present in the bypass line. Install the device at or as near as practical to the entrance to any bypass line. Subpart UUU. [40 CFR 63.1569(a)(1)(i)] Which Months: All Year Statistical Basis: None specified
295	[40 CFR 63.1569(a)(1)(ii)]	Bypass lines (If Option 2 of Table 36 is Applicable): Install a car-seal or lock-and-key device placed on the mechanism by which the bypass device flow position is controlled when the bypass device is in the closed position such the that bypass line valve cannot be opened without breaking the seal or removing the device. Subpart UUU. [40 CFR 63.1569(a)(1)(ii)]
296	[40 CFR 63.1569(a)(1)(iii)]	Bypass lines (If Option 3 of Table 36 is Applicable): Seal the bypass line by installing a solid blind between piping flanges. Subpart UUU. [40 CFR 63.1569(a)(1)(iii)]
297	[40 CFR 63.1569(a)(1)(iv)]	Bypass lines (If Option 4 of Table 36 is Applicable): Vent the bypass line to a control device that meets the appropriate requirements in 40 CFR 63 Subpart UUU. Subpart UUU. [40 CFR 63.1569(a)(1)(iv)]
298	[40 CFR 63.1569(b)(1)]	Bypass lines: If applicable, conduct each performance test according to the requirements in 40 CFR 63.1571 and under the conditions specified in 40 CFR 63 Subpart UUU Table 37. Subpart UUU. [40 CFR 63.1569(b)(1)]

EQT 0205 19-08 - GME Thermal Oxidizer No. 2

299	[40 CFR 63.1569(b)(2)]	Bypass lines: Demonstrate initial compliance with each applicable work practice standard in 40 CFR 63 Subpart UUU Table 36 according to 40 CFR 63 Subpart UUU Table 38. Subpart UUU. [40 CFR 63.1569(b)(2)]
300	[40 CFR 63.1569(b)(3)]	Demonstrate initial compliance with the work practice standard in 40 CFR 63.1569(a)(3) by submitting the operation, maintenance, and monitoring plan to DEQ as part of the Notification of Compliance Status. Subpart UUU. [40 CFR 63.1569(b)(3)]
301	[40 CFR 63.1569(b)(4)]	Submit the Notification of Compliance Status containing the results of the initial compliance demonstration according to the requirements in 40 CFR 63.1574. Subpart UUU. [40 CFR 63.1569(b)(4)]
302	[40 CFR 63.1569(c)(1)]	Bypass lines: Demonstrate continuous compliance with each applicable work practice standard in 40 CFR 63 Subpart UUU Table 36 according to the requirements in 40 CFR 63 Subpart UUU Table 39. Subpart UUU. [40 CFR 63.1569(c)(1)]
303	[40 CFR 63.1569(c)(2)]	Demonstrate continuous compliance with the work practice standard in 40 CFR 63.1569(a)(2) by complying with the procedures in the operation, maintenance, and monitoring plan. Subpart UUU. [40 CFR 63.1569(c)(2)]
304	[40 CFR 63.1570(a)]	If applcable, be in compliance with all of the non-opacity standards in 40 CFR 63 Subpart UUU during the times specified in 40 CFR 63.6(f)(1). Subpart UUU. [40 CFR 63.1570(a)]
305	[40 CFR 63.1570(b)]	Be in compliance with the opacity and visible emission limits in 40 CFR 63 Subpart UUU during the times specified in 40 CFR 63.6(h)(1). Subpart UUU. [40 CFR 63.1570(b)]
306	[40 CFR 63.1570(c)]	Operate and maintain the affected source, including air pollution control and monitoring equipment, according to the provisions in 40 CFR 63.6(e)(1)(i). Subpart UUU. [40 CFR 63.1570(c)]
307	[40 CFR 63.1570(d)]	Develop and implement a written startup, shutdown, and malfunction plan (SSMP) according to the provisions in 40 CFR 63.6(e)(3). Subpart UUU. [40 CFR 63.1570(d)]
308	[40 CFR 63.1570(f)]	Report each instance in which the applicable emission limitations, operating limits, and work practice standards in 40 CFR 63 Subpart UUU were not met according to the requirements in 40 CFR 63.1575. Subpart UUU. [40 CFR 63.1570(f)]
309	[40 CFR 63.1574(a)]	Submit all of the applicable notifications in 40 CFR 63.6(h), 63.7(b) and (c), 63.8(e), 63.8(f)(4), 63.8(f)(6), and 63.9(b) through (h) by the dates specified, except as allowed in 40 CFR 63.1574(a)(1) through (a)(3). Subpart UUU. [40 CFR 63.1574(a)]
310	[40 CFR 63.1574(d)]	Include the information in 40 CFR 63 Subpart UUU Table 42 in the notification of compliance status report. Subpart UUU. [40 CFR 63.1574(d)]
311	[40 CFR 63.1574(f)]	Prepare and implement an operation, maintenance, and monitoring plan for each control system and continuous monitoring system for each affected source. In the plan, detail the operation, maintenance, and monitoring procedures for the facility. Submit the plan to DEQ for review and approval along with the notification of compliance status. Submit any changes to DEQ for review and approval and comply with the plan until the change is approved. Include in each plan, at a minimum, the information specified in 40 CFR 63.1574(f)(2)(i) through (f)(2)(xii). Subpart UUU. [40 CFR 63.1574(f)]
312	[40 CFR 63.1575]	Submit compliance status report: Due semiannually, by the 31st of January and July. Include the information specified in 40 CFR 63.1575(c) through (j), as applicable. Subpart UUU.
313	[40 CFR 63.1576]	Equipment/operational data recordkeeping by electronic or hard copy continuously. Keep records of the information specified in 40 CFR 63.1576(a) through (f). Keep records in a form suitable and readily available for expeditious review according to 40 CFR 63.10(b)(1). Keep each record for 5 years following the date of each occurrence, measurement, maintenance, corrective action, report, or record, as specified in 40 CFR 63.10(b)(1). Keep each record on site for at least 2 years after the date of each occurrence, measurement, maintenance, corrective action, report, or record, according to 40 CFR 63.10(b)(1). The remaining 3 years may be kept off site. Subpart UUU.

EQT [redacted]05 19-08 - GME Thermal Oxidizer No. 2

314	[LAC 33:III.1101.B]	Opacity <= 20 percent, except during the cleaning of a fire box or building of a new fire, soot blowing or lancing, charging of an incinerator, equipment changes, ash removal or rapping of precipitators, which may have an opacity in excess of 20 percent for not more than one six-minute period in any 60 consecutive minutes. Which Months: All Year Statistical Basis: None specified
315	[LAC 33:III.1311.C]	Opacity <= 20 percent; except emissions may have an average opacity in excess of 20 percent for not more than one six-minute period in any 60 consecutive minutes. Which Months: All Year Statistical Basis: Six-minute average
316	[LAC 33:III.1313.C]	Total suspended particulate <= 0.6 lb/MMBTU of heat input. Which Months: All Year Statistical Basis: None specified
317	[LAC 33:III.1503.C]	Compliance with all the applicable requirements of NSPS, 40 CFR 60, Subpart Ja has been determined to be compliance in accordance with LAC 33:III.1503.
318	[LAC 33:III.509]	Degassing of the liquid sulfur product upstream of the Sulfur Pit as H2S is limited to Hydrogen sulfide <= 15 ppmv and recycling of the Sulfur Pit emissions to the SRU inlet. [PSD-LA-719(M-1)]. [LAC 33:III.509, 40 CFR 52.21] Which Months: All Year Statistical Basis: None specified
319	[LAC 33:III.509]	Emissions from the TGTU shall be controlled by mainatinaing an optmized air-fuel ratio which has been determined to be compliance as BACT for PM10, CO, NOx, and VOC in accordance with LAC 33:III.509. NOx and VOC emissions are limited to 0.20 lb/MM BTU and 0.0004 lb/MM BTU, respecticely. [PSD-LA-719(M-1)]. [LAC 33:III.509, 40 CFR 52.21]
320	[LAC 33:III.5109.A]	Emits Class III toxic air pollutants. No MACT required.

EQT 0208 21-08 - GME Emergency Generator (Dock)

321	[LAC 33:III.1101.B]	Opacity <= 20 percent, except during the cleaning of a fire box or building of a new fire, soot blowing or lancing, charging of an incinerator, equipment changes, ash removal or rapping of precipitators, which may have an opacity in excess of 20 percent for not more than one six-minute period in any 60 consecutive minutes. Which Months: All Year Statistical Basis: None specified
322	[LAC 33:III.1313.C]	Total suspended particulate <= 0.6 lb/MMBTU of heat input. Which Months: All Year Statistical Basis: None specified
323	[LAC 33:III.1513]	Equipment/operational data recordkeeping by electronic or hard copy continuously. Record and keep on site for at least two years the data required to demonstrate exemption from the provisions of LAC 33:III.Chapter 15. Record all emissions data in the units of the standard using the averaging time of the standard. Make records available to a representative of DEQ or the U.S. EPA on request.
324	[LAC 33:III.509]	Use of Low Sulfur Diesel having a sulfur content of 15 ppmv or less is considered as BACT. [PSD-LA-719(M-1)]. [LAC 33:III.509, 40 CFR 52.21]

EQT 0209 22-08 - GME Emergency Generator (Tank Farm)

EQT 0209 22-08 - GME Emergency Generator (Tank Farm)

325	[LAC 33:III.1101.B]	Opacity <= 20 percent, except during the cleaning of a fire box or building of a new fire, soot blowing or lancing, charging of an incinerator, equipment changes, ash removal or rapping of precipitators, which may have an opacity in excess of 20 percent for not more than one six-minute period in any 60 consecutive minutes. Which Months: All Year Statistical Basis: None specified
326	[LAC 33:III.1313.C]	Total suspended particulate <= 0.6 lb/MMBTU of heat input. Which Months: All Year Statistical Basis: None specified
327	[LAC 33:III.1513]	Equipment/operational data recordkeeping by electronic or hard copy continuously. Record and keep on site for at least two years the data required to demonstrate exemption from the provisions of LAC 33:III.Chapter 15. Record all emissions data in the units of the standard using the averaging time of the standard. Make records available to a representative of DEQ or the U.S. EPA on request.
328	[LAC 33:III.509]	Use of Low Sulfur Diesel having a sulfur content of 15 ppmv or less is considered as BACT. [PSD-LA-719(M-1)]. [LAC 33:III.509, 40 CFR 52.21]

EQT 0210 23-08 - GME Platformer Regenerator Vent

329	[40 CFR 63.1567(a)(1)(i)]	Shall meet the 97% HCl reduction as per Table 22, Item 3. [40 CFR 63.1567(a)(1)(i)]
330	[40 CFR 63.1567(b)(6)]	Submit the Notification of Compliance Status containing the results of the initial compliance demonstration according to the requirements in 40 CFR 63.1574. Subpart UUU. [40 CFR 63.1567(b)(6)]
331	[40 CFR 63.1567(c)(2)]	Demonstrate initial compliance with the work practice standard in 40 CFR 63.1567(a)(3) by submitting the operation, maintenance, and monitoring plan to DEQ as part of the Notification of Compliance Status. Subpart UUU. [40 CFR 63.1567(c)(2)]
332	[40 CFR 63.1567(c)(2)]	Demonstrate continuous compliance with the work practice standard in 40 CFR 63.1567(a)(3) by maintaining records to document conformance with the procedures in the operation, maintenance and monitoring plan. Subpart UUU. [40 CFR 63.1567(c)(2)]
333	[40 CFR 63.1569(a)(1)(i)]	Bypass lines (If Option 1 of Table 36 is Applicable): Flow monitored by the regulation's specified method(s) continuously or at least every hour. Use a device (including a flow indicator, level recorder, or electronic valve position monitor) to demonstrate whether flow is present in the bypass line. Install the device at or as near as practical to the entrance to any bypass line. Subpart UUU. [40 CFR 63.1569(a)(1)(i)] Which Months: All Year Statistical Basis: None specified
334	[40 CFR 63.1569(a)(1)(ii)]	Bypass lines (If Option 2 of Table 36 is Applicable): Install a car-seal or lock-and-key device placed on the mechanism by which the bypass device flow position is controlled when the bypass device is in the closed position such the that bypass line valve cannot be opened without breaking the seal or removing the device. Subpart UUU. [40 CFR 63.1569(a)(1)(ii)]
335	[40 CFR 63.1569(a)(1)(iii)]	Bypass lines (If Option 3 of Table 36 is Applicable): Seal the bypass line by installing a solid blind between piping flanges. Subpart UUU. [40 CFR 63.1569(a)(1)(iii)]
336	[40 CFR 63.1569(a)(1)(iv)]	Bypass lines (If Option 4 of Table 36 is Applicable): Vent the bypass line to a control device that meets the appropriate requirements in 40 CFR 63 Subpart UUU. Subpart UUU. [40 CFR 63.1569(a)(1)(iv)]
337	[40 CFR 63.1569(b)(1)]	Bypass lines (If Option 1 of Table 36 is Applicable): Conduct each performance test according to the requirements in 40 CFR 63.1571 and under the conditions specified in 40 CFR 63 Subpart UUU Table 37. Subpart UUU. [40 CFR 63.1569(b)(1)]
338	[40 CFR 63.1569(b)(2)]	Bypass lines: Demonstrate initial compliance with each applicable work practice standard in 40 CFR 63 Subpart UUU Table 36 according to 40 CFR 63 Subpart UUU Table 38. Subpart UUU. [40 CFR 63.1569(b)(2)]

EQT 0210 23-08 - GME Platformer Regenerator Vent

339	[40 CFR 63.1569(c)(1)]	Bypass lines: Demonstrate continuous compliance with each applicable work practice standard in 40 CFR 63 Subpart UUU Table 36 according to the requirements in 40 CFR 63 Subpart UUU Table 39. Subpart UUU. [40 CFR 63.1569(c)(1)]
340	[40 CFR 63.1570(a)]	Be in compliance with all of the non-opacity standards in 40 CFR 63 Subpart UUU during the times specified in 40 CFR 63.6(f)(1). Subpart UUU. [40 CFR 63.1570(a)]
341	[40 CFR 63.1570(b)]	If applicable, be in compliance with the opacity and visible emission limits in 40 CFR 63 Subpart UUU during the times specified in 40 CFR 63.6(h)(1). Subpart UUU. [40 CFR 63.1570(b)]
342	[40 CFR 63.1570(c)]	Operate and maintain the affected source, including air pollution control and monitoring equipment, according to the provisions in 40 CFR 63.6(e)(1)(i). Subpart UUU. [40 CFR 63.1570(c)]
343	[40 CFR 63.1570(d)]	Develop and implement a written startup, shutdown, and malfunction plan (SSMP) according to the provisions in 40 CFR 63.6(e)(3). Subpart UUU. [40 CFR 63.1570(d)]
344	[40 CFR 63.1570(f)]	Report each instance in which the applicable emission limitations, operating limits, and work practice standards in 40 CFR 63 Subpart UUU were not met according to the requirements in 40 CFR 63.1575. Subpart UUU. [40 CFR 63.1570(f)]
345	[40 CFR 63.1574(a)]	Submit all of the applicable notifications in 40 CFR 63.6(h), 63.7(b) and (c), 63.8(e), 63.8(f)(4), 63.8(f)(6), and 63.9(b) through (h) by the dates specified, except as allowed in 40 CFR 63.1574(a)(1) through (a)(3). Subpart UUU. [40 CFR 63.1574(a)]
346	[40 CFR 63.1574(d)]	Include the information in 40 CFR 63 Subpart UUU Table 42 in the notification of compliance status report. Subpart UUU. [40 CFR 63.1574(d)]
347	[40 CFR 63.1574(f)]	Prepare and implement an operation, maintenance, and monitoring plan for each control system and continuous monitoring system for each affected source. In the plan, detail the operation, maintenance, and monitoring procedures for the facility. Submit the plan to DEQ for review and approval along with the notification of compliance status. Submit any changes to DEQ for review and approval and comply with the plan until the change is approved. Include in each plan, at a minimum, the information specified in 40 CFR 63.1574(f)(2)(i) through (f)(2)(xii). Subpart UUU. [40 CFR 63.1574(f)]
348	[40 CFR 63.1575]	Submit compliance status report: Due semiannually, by the 31st of January and July. Include the information specified in 40 CFR 63.1575(c) through (j), as applicable. Subpart UUU.
349	[40 CFR 63.1576]	Equipment/operational data recordkeeping by electronic or hard copy continuously. Keep records of the information specified in 40 CFR 63.1576(a) through (f). Keep records in a form suitable and readily available for expeditious review according to 40 CFR 63.10(b)(1). Keep each record for 5 years following the date of each occurrence, measurement, maintenance, corrective action, report, or record, as specified in 40 CFR 63.10(b)(1). Keep each record on site for at least 2 years after the date of each occurrence, measurement, maintenance, corrective action, report, or record, according to 40 CFR 63.10(b)(1). The remaining 3 years may be kept off site. Subpart UUU.
350	[LAC 33:III.509]	Compliance with all the applicable requirements of NESHAP, 40 CFR 63, Subpart UUU has been determined to be complinace with BACT for Organic and Inorganic HAPs in accordance with LAC 33:III.509. [PSD-LA-719(M-1)]. [LAC 33:III.509, 40 CFR 52.21]

EQT 0211 24-08 - GME Cooling Tower No. 1

351	[40 CFR 52.21]	Drift rate specified for control of Particulate matter (10 microns or less) <= 0.005 percent of the circulating water rate which is considered as BACT. [PSD-LA-719(M-1)]. [40 CFR 52.21, LAC 33:III.509] Which Months: All Year Statistical Basis: None specified

EQT 0211 24-08 - GME Cooling Tower No. 1

352	[40 CFR 63.104(b)]	Heat exchange systems (cooling water): HAP monitored by the regulation's specified method(s) monthly for the first 6 months and quarterly thereafter to detect leaks. Monitor for total hazardous air pollutants, total volatile organic compounds, total organic carbon, one or more speciated HAP compounds, or other representative substances that would indicate the presence of a leak in the heat exchange system. Subpart F. [40 CFR 63.104(b)] Which Months: All Year Statistical Basis: None specified
353	[40 CFR 63.104(d)]	Heat exchange systems: Repair leaks as soon as practicable but not later than 45 calendar days after receiving results of monitoring tests indicating a leak, if a leak is detected according to the criteria of 40 CFR 63.104(b) or (c). Once the leak has been repaired, confirm that the heat exchange system has been repaired within 7 calendar days of the repair or startup, whichever is later. Subpart F. [40 CFR 63.104(d)]
354	[40 CFR 63.104(f)]	Heat exchange systems: Equipment/operational data recordkeeping by electronic or hard copy at the regulation's specified frequency. Retain the records identified in 40 CFR 63.104(f)(1)(i) through (iv) as specified in 40 CFR 63.103(c)(1). Subpart F. [40 CFR 63.104(f)]
355	[LAC 33:III.509]	Monthly monitoring of the Heat Exchanger/Cooling Tower for VOC has been determined to be compliance with BACT for controlling VOC emissions from the Cooling Tower in accordance with LAC 33:III.509. [PSD-LA-719(M-1)]. [LAC 33:III.509, 40 CFR 52.21, 40 CFR 63.104(b)(1)]

EQT 0212 31-08 - GME Coke Stockpile

356	[LAC 33:III.1311.B]	Total suspended particulate <= 79.97 lb/hr. The rate of emission shall be the total of all emission points from the source as per Table 3 of LAC 33:III.1321. Which Months: All Year Statistical Basis: None specified
357	[LAC 33:III.509]	Permittee shall enclose the conveyors, transfer points, coke crusher area, and barge loading area to the maximum extent possible and maintain a minimum moisture content of 8 percent for the petroleum coke as BACT. [PSD-LA-719]. [LAC 33:III.509, 40 CFR 52.21]

EQT 0213 32-08 - GME Cooling Tower No. 2

358	[40 CFR 52.21]	Drift rate specified for control of Particulate matter (10 microns or less) <= 0.005 percent of the circulating water rate which is considered as BACT. [PSD-LA-719]. [40 CFR 52.21, LAC 33:III.509] Which Months: All Year Statistical Basis: None specified
359	[40 CFR 63.104(b)]	Heat exchange systems (cooling water): HAP monitored by the regulation's specified method(s) monthly for the first 6 months and quarterly thereafter to detect leaks. Monitor for total hazardous air pollutants, total volatile organic compounds, total organic carbon, one or more speciated HAP compounds, or other representative substances that would indicate the presence of a leak in the heat exchange system. Subpart F. [40 CFR 63.104(b)] Which Months: All Year Statistical Basis: None specified
360	[40 CFR 63.104(d)]	Heat exchange systems: Repair leaks as soon as practicable but not later than 45 calendar days after receiving results of monitoring tests indicating a leak, if a leak is detected according to the criteria of 40 CFR 63.104(b) or (c). Once the leak has been repaired, confirm that the heat exchange system has been repaired within 7 calendar days of the repair or startup, whichever is later. Subpart F. [40 CFR 63.104(d)]
361	[40 CFR 63.104(f)]	Heat exchange systems: Equipment/operational data recordkeeping by electronic or hard copy at the regulation's specified frequency. Retain the records identified in 40 CFR 63.104(f)(1)(i) through (iv) as specified in 40 CFR 63.103(c)(1). Subpart F. [40 CFR 63.104(f)]

EQT 0213 32-08 - GME Cooling Tower No. 2

362	[LAC 33:III.509]	Monthly monitoring of the Heat Exchanger/Cooling Tower for VOC has been determined to be compliance with BACT for controlling VOC emissions from the Cooling Tower in accordance with LAC 33:III.509. [PSD-LA-719]. [LAC 33:III.509, 40 CFR 52.21, 40 CFR 63.104(b)(1)]

EQT 0214 33A-08 - GME A Coker Drum Vent

363	[40 CFR 63.643(b)]	Compliance with all the applicable requirements of NESHAP, 40 CFR 63, Subpart CC has been determined to be compliance with all the applicable requirements in accordance with LAC 33:III.Chapter 51. [40 CFR 63.643(b), LAC 33:III.5109.A]

EQT 0215 33B-08 - GME B Coker Drum Vent

364	[40 CFR 63.643(b)]	Compliance with all the applicable requirements of NESHAP, 40 CFR 63, Subpart CC has been determined to be compliance with all the applicable requirements in accordance with LAC 33:III.Chapter 51. [40 CFR 63.643(b), LAC 33:III.5109.A]

EQT 0247 1-07 - Gasoline Storage Tank

365	[LAC 33:III.2103.A]	Equip with a submerged fill pipe.
366	[LAC 33:III.2103.H.3]	Determine VOC maximum true vapor pressure using the methods in LAC 33:III.2103.H.3.a-e.
367	[LAC 33:III.2103.I]	Equipment/operational data recordkeeping by electronic or hard copy at the regulation's specified frequency. Keep records of the information specified in LAC 33:III.2103.I.1 - 7, as applicable.

EQT 0248 2-07 - Gasoline Storage Tank

368	[LAC 33:III.2103.A]	Equip with a submerged fill pipe.
369	[LAC 33:III.2103.H.3]	Determine VOC maximum true vapor pressure using the methods in LAC 33:III.2103.H.3.a-e.
370	[LAC 33:III.2103.I]	Equipment/operational data recordkeeping by electronic or hard copy at the regulation's specified frequency. Keep records of the information specified in LAC 33:III.2103.I.1 - 7, as applicable.

EQT 0282 20A-08 - GME North Flare

371	[40 CFR 60.104(a)(1)]	Fuel gas: Hydrogen sulfide <= 0.1 gr/dscf (230 mg/dscm) or less than 160 ppm on a three hour rolling average. Subpart J. [40 CFR 60.104(a)(1)] Which Months: All Year Statistical Basis: Three-hour rolling average
372	[40 CFR 60.105(a)(4)]	Hydrogen sulfide monitored by continuous emission monitor (CEM) continuously. Monitor the H2S in fuel gases before being burned in any fuel gas combustion device. Subpart J. [40 CFR 60.105(a)(4)] Which Months: All Year Statistical Basis: None specified
373	[40 CFR 60.106(a)]	Use as reference methods and procedures the test methods in 40 CFR 60 appendix A or other methods and procedures as specified in 40 CFR 60.106, except as provided in 40 CFR 60.8(b), in conducting the performance tests required in 40 CFR 60.8. Subpart J. [40 CFR 60.106(a)]
374	[40 CFR 60.106]	Determine compliance with standards using the test methods and procedures specified in 40 CFR 60.106(a) through (k). Subpart J.

EQT 0282 20A-08 - GME North Flare

375	[40 CFR 60.107]	Shall comply with all the applicable requirements of reporting and recordkeeping as specified in 40 CFR 60.107, Subpart J.
376	[40 CFR 60.18(c)(1)]	Design and operate for no visible emissions, as determined by the methods specified in 40 CFR 60.18(f), except for periods not to exceed a total of 5 minutes during any two consecutive hours. Subpart A. [40 CFR 60.18(c)(1)]
377	[40 CFR 60.18(c)(2)]	Operate with a flame present at all times, as determined by the methods specified in 40 CFR 60.18(f)(2). Subpart A. [40 CFR 60.18(c)(2)]
378	[40 CFR 60.18(c)(3)(ii)]	Heat content >= 300 BTU/scf (11.2 MJ/scm). Determine the net heating value of the gas being combusted by the methods specified in 40 CFR 60.18(f)(3). Subpart A. [40 CFR 60.18(c)(3)(ii)] Which Months: All Year Statistical Basis: None specified
379	[40 CFR 60.18(d)]	Monitor flares to ensure that they are operated and maintained in conformance with their designs. Applicable subparts will provide provisions stating how to monitor flares. Subpart A. [40 CFR 60.18(d)]
380	[40 CFR 60.18(e)]	Operate at all times when emissions may be vented to the flare. Subpart A. [40 CFR 60.18(e)]
381	[40 CFR 60.18(f)(2)]	Presence of a flame monitored by flame monitor continuously. Use a thermocouple or any other equivalent device to detect the presence of a flare pilot flame. Subpart A. [40 CFR 60.18(f)(2)] Which Months: All Year Statistical Basis: None specified
382	[40 CFR 63.11(b)(1)]	Monitor flares to assure that they are operated and maintained in conformance with their designs. Subpart A. [40 CFR 63.11(b)(1)]
383	[40 CFR 63.11(b)(3)]	Operate at all times when emissions may be vented to the flare. Subpart A. [40 CFR 63.11(b)(3)]
384	[40 CFR 63.11(b)(4)]	Design and operate for no visible emissions, as determined using Test Method 22 in Appendix A of 40 CFR 60, except for periods not to exceed a total of 5 minutes during any two consecutive hours. Subpart A. [40 CFR 63.11(b)(4)]
385	[40 CFR 63.11(b)(5)]	Presence of a flame monitored by flame monitor continuously. Use a thermocouple or any other equivalent device to detect the presence of a flame. Subpart A. [40 CFR 63.11(b)(5)] Which Months: All Year Statistical Basis: None specified
386	[40 CFR 63.11(b)(5)]	Operate with a flame present at all times. Subpart A. [40 CFR 63.11(b)(5)]
387	[40 CFR 63.11(b)(7)(ii)]	Exit Velocity >= 60 and < 400 ft/sec (18.3 m/sec and 122 m/sec), as determined by the method specified in 40 CFR 63.11(b)(7)(i). Subpart A. [40 CFR 63.11(b)(7)(ii)] Which Months: All Year Statistical Basis: None specified
388	[40 CFR 63.643(a)(1)]	Reduce emissions of organic HAPs using a flare that meets the requirements of 40 CFR 60.18 and 40 CFR 63.11(b). Subpart CC. [PSD-LA-719]. [40 CFR 63.643(a)(1)]
389	[40 CFR 63.643(a)(2)]	Organic HAP >= 98 % reduction by weight, or <= 20 ppmv, on a dry basis, corrected to 3% oxygen, whichever is less stringent, using a control device. Subpart CC. [40 CFR 63.643(a)(2)] Which Months: All Year Statistical Basis: None specified
390	[40 CFR 63.643(b)]	Group 1: The vent stream shall be introduced into the flame zone. Subpart CC. [40 CFR 63.644(a)(3), 40 CFR 63.643(b)]
391	[LAC 33:III.1105]	Submit notification: Due to the Office of Environmental Compliance, Emergency and Radiological Services Division, Single Point of Contact (SPOC), as soon as possible after the start of burning of pressure valve releases for control over process upsets. Notify in accordance with LAC 33:I.3923. Notification is required only if the upset cannot be controlled in six hours.
392	[LAC 33:III.1105]	Opacity <= 20 percent, except for a combined total of six hours in any 10 consecutive day period, for burning in connection with pressure valve releases for control over process upsets. Which Months: All Year Statistical Basis: None specified

EQT 0282 20A-08 - GME North Flare

393	[LAC 33:III.1503.C]	Compliance with all the applicable requirements of NSPS, 40 CFR 60, Subpart J has been determined to be compliance in accordance with LAC 33:III.1503.
394	[LAC 33:III.501.C.6]	Permittee shall ensure compliance with the opacity emission limits of this permit by visually inspecting the GME Flare, Emission Point 20A-08, for opacity on a weekly basis. If visible emissions are detected, then, within three (3) working days, the permittee shall conduct a 6-minute opacity reading in accordance with EPA Reference Method 9. Visible emissions will be considered a violation of the 20% opacity limit. Records of visible emission checks shall include the emission point ID number, the date the visual check was performed, a record if visible emissions were detected, a record and results of any Method 9 testing conducted, and a record of any corrective actions taken. These records shall be kept on site and available for inspection by the Office of Environmental Compliance, Surveillance Division.

EQT 0284 20B-08 - GME South Flare

395	[40 CFR 60.104(a)(1)]	Fuel gas: Hydrogen sulfide <= 0.1 gr/dscf (230 mg/dscm) or less than 160 ppm on a three hour rolling average. Subpart J. [40 CFR 60.104(a)(1)] Which Months: All Year Statistical Basis: Three-hour rolling average
396	[40 CFR 60.105(a)(4)]	Hydrogen sulfide monitored by continuous emission monitor (CEM) continuously. Monitor the H2S in fuel gases before being burned in any fuel gas combustion device. Subpart J. [40 CFR 60.105(a)(4)] Which Months: All Year Statistical Basis: None specified
397	[40 CFR 60.106(a)]	Use as reference methods and procedures the test methods in 40 CFR 60 appendix A or other methods and procedures as specified in 40 CFR 60.106, except as provided in 40 CFR 60.8(b), in conducting the performance tests required in 40 CFR 60.8. Subpart J. [40 CFR 60.106(a)]
398	[40 CFR 60.106]	Determine compliance with standards using the test methods and procedures specified in 40 CFR 60.106(a) through (k). Subpart J.
399	[40 CFR 60.107]	Shall comply with all the applicable requirements of reporting and recordkeeping as specified in 40 CFR 60.107. Subpart J.
400	[40 CFR 60.18(c)(1)]	Design and operate for no visible emissions, as determined by the methods specified in 40 CFR 60.18(f), except for periods not to exceed a total of 5 minutes during any two consecutive hours. Subpart A. [40 CFR 60.18(c)(1)]
401	[40 CFR 60.18(c)(2)]	Operate with a flame present at all times, as determined by the methods specified in 40 CFR 60.18(f)(2). Subpart A. [40 CFR 60.18(c)(2)]
402	[40 CFR 60.18(c)(3)(ii)]	Heat content >= 300 BTU/scf (11.2 MJ/scm). Determine the net heating value of the gas being combusted by the methods specified in 40 CFR 60.18(f)(3). Subpart A. [40 CFR 60.18(c)(3)(ii)] Which Months: All Year Statistical Basis: None specified
403	[40 CFR 60.18(d)]	Monitor flares to ensure that they are operated and maintained in conformance with their designs. Applicable subparts will provide provisions stating how to monitor flares. Subpart A. [40 CFR 60.18(d)]
404	[40 CFR 60.18(e)]	Operate at all times when emissions may be vented to the flare. Subpart A. [40 CFR 60.18(e)]
405	[40 CFR 60.18(f)(2)]	Presence of a flame monitored by flame monitor continuously. Use a thermocouple or any other equivalent device to detect the presence of a flare pilot flame. Subpart A. [40 CFR 60.18(f)(2)] Which Months: All Year Statistical Basis: None specified
406	[40 CFR 63.11(b)(1)]	Monitor flares to assure that they are operated and maintained in conformance with their designs. Subpart A. [40 CFR 63.11(b)(1)]
407	[40 CFR 63.11(b)(3)]	Operate at all times when emissions may be vented to the flare. Subpart A. [40 CFR 63.11(b)(3)]

EQT 0284 20B-08 - GME South Flare

408	[40 CFR 63.11(b)(4)]	Design and operate for no visible emissions, as determined using Test Method 22 in Appendix A of 40 CFR 60, except for periods not to exceed a total of 5 minutes during any two consecutive hours. Subpart A. [40 CFR 63.11(b)(4)]
409	[40 CFR 63.11(b)(5)]	Operate with a flame present at all times. Subpart A. [40 CFR 63.11(b)(5)]
410	[40 CFR 63.11(b)(5)]	Presence of a flame monitored by flame monitor continuously. Use a thermocouple or any other equivalent device to detect the presence of a flame. Subpart A. [40 CFR 63.11(b)(5)] Which Months: All Year Statistical Basis: None specified
411	[40 CFR 63.11(b)(7)(ii)]	Exit Velocity >= 60 and < 400 ft/sec (18.3 m/sec and 122 m/sec), as determined by the method specified in 40 CFR 63.11(b)(7)(i). Subpart A. [40 CFR 63.11(b)(7)(ii)] Which Months: All Year Statistical Basis: None specified
412	[40 CFR 63.643(a)(1)]	Reduce emissions of organic HAPs using a flare that meets the requirements of 40 CFR 60.18 and 40 CFR 63.11(b). Subpart CC. [PSD-LA-719]. [40 CFR 63.643(a)(1)]
413	[40 CFR 63.643(a)(2)]	Organic HAP >= 98 % reduction by weight, or <= 20 ppmv, on a dry basis, corrected to 3% oxygen, whichever is less stringent, using a control device. Subpart CC. [40 CFR 63.643(a)(2)] Which Months: All Year Statistical Basis: None specified
414	[40 CFR 63.643(b)]	Group 1: The vent stream shall be introduced into the flame zone. Subpart CC. [40 CFR 63.644(a)(3), 40 CFR 63.643(b)]
415	[LAC 33:III.1105]	Opacity <= 20 percent, except for a combined total of six hours in any 10 consecutive day period, for burning in connection with pressure valve releases for control over process upsets. Which Months: All Year Statistical Basis: None specified
416	[LAC 33:III.1105]	Submit notification: Due to the Office of Environmental Compliance, Emergency and Radiological Services Division, Single Point of Contact (SPOC), as soon as possible after the start of burning of pressure valve releases for control over process upsets. Notify in accordance with LAC 33:I.3923. Notification is required only if the upset cannot be controlled in six hours.
417	[LAC 33:III.1503.C]	Compliance with all the applicable requirements of NSPS, 40 CFR 60, Subpart J has been determined to be compliance in accordance with LAC 33:III.1503.
418	[LAC 33:III.501.C.6]	Permittee shall ensure compliance with the opacity emission limits of this permit by visually inspecting the GME Flare, Emission Point 20-08, for opacity on a weekly basis. If visible emissions are detected, then, within three (3) working days, the permittee shall conduct a 6-minute opacity reading in accordance with EPA Reference Method 9. Visible emissions will be considered a violation of the 20% opacity limit. Records of visible emission checks shall include the emission point ID number, the date the visual check was performed, a record if visible emissions were detected, a record and results of any Method 9 testing conducted, and a record of any corrective actions taken. These records shall be kept on site and available for inspection by the Office of Environmental Compliance, Surveillance Division.

EQT 0285 20A-08 SU/SD - GME North Flare Startup/Shutdown

EQT 0285 20A-08 SU/SD - GME North Flare Startup/Shutdown

419	[LAC 33:III.507]	Permittee shall show compliance with the emission limits, as specified in this specific condition, from the Flare, Emission 20A-08 SU/SD, due to the maintenance, startup and shutdown activities at the plant when the emissions are routed to this flare. The permittee shall calculate the emissions based on each activity as referenced above. The total emissions shall not exceed for each pollutant, SO2, 6.83 tons per year (TPY); NOx, 0.57 TPY; CO, 0.12 TPY; VOC, 1.64 TPY; Benzene, <0.01 TPY; H2S, 0.01 TPY; n-Hexane, 0.04 TPY; Toluene, <0.01 TPY; and Xylene, <0.01 TPY. All the activities shall be recorded along with the corresponding calculated emissions for each month, as well as the total calculated emissions based on the activities for the last twelve months. These records shall be kept on site and available for inspection by the Department of Environmental Quality personnel. The total calculated emissions based on the activities above the maximum listed in this permit as referenced above for any twelve consecutive month period shall be a violation of this permit and must be reported to the Office of Environmental Compliance, Enforcement Division.

EQT 0286 20B-08 SU/SD - GME South Flare Startup/Shutdown

420	[LAC 33:III.507]	Permittee shall show compliance with the emission limits, as specified in this specific condition, from the Flare, Emission 20B-08 SU/SD, due to the maintenance, startup and shutdown activities at the plant when the emissions are routed to this flare. The permittee shall calculate the emissions based on each activity as referenced above. The total emissions shall not exceed for each pollutant, SO2, 2.04 tons per year (TPY); NOx, 0.07 TPY; CO, 0.01 TPY; VOC, 0.15 TPY; Benzene, <0.01 TPY; H2S, 0.01 TPY; and n-Hexane, 0.04 TPY. All the activities shall be recorded along with the corresponding calculated emissions for each month, as well as the total calculated emissions based on the activities for the last twelve months. These records shall be kept on site and available for inspection by the Department of Environmental Quality personnel. The total calculated emissions based on the activities above the maximum listed in this permit as referenced above for any twelve consecutive month period shall be a violation of this permit and must be reported to the Office of Environmental Compliance, Enforcement Division.

FUG 0053 Unit 205 Fug. - GME Delayed Coker Unit Fugitives

421	[40 CFR 60.592a(a)]	Comply with the requirements of 40 CFR 60.482-1a to 482-10a as soon as practicable, but no later than 180 days after initial startup. Subpart GGGa. [40 CFR 60.592a(a)]
422	[40 CFR 60.592a(d)]	Comply with the provisions of 40 CFR 60.485a except as provided in 40 CFR 60.593a. Subpart GGGa. [40 CFR 60.592a(d)]
423	[40 CFR 60.592a(e)]	Comply with the provisions of 40 CFR 60.486a and 60.487a. Subpart GGGa. [40 CFR 60.592a(e)]
424	[40 CFR 63.648]	Compliance with all the applicable requirements of NSPS, 40 CFR 60, Subpart GGGa has been determined to be compliance in accordance with NESHAP, Subpart CC - HAPs from Refineries; LAC 33:III.5109.a - Louisiana MACT for Refinery Equipment Leaks; and LAC 33.III.2121 - Fugitive Emission Control. [40 CFR 63.648, LAC 33:III.5109.A, LAC 33:III.2121, 40 CFR 60.590a]
425	[LAC 33:III.2111]	Equip all rotary pumps and compressors handling volatile organic compounds having a true vapor pressure of 1.5 psia or greater at handling conditions with mechanical seals or other equivalent equipment.
426	[LAC 33:III.509]	Permittee shall comply with the most stringent regulation program and with the requirements of the Consent Decree for equipment leak definition. See Specific Condition No. 1 of the "STATE ONLY SPECIFIC CONDITIONS". [PSD-LA-719(M-1)]. [LAC 33:III.509, 40 CFR 52.21]

FUG 0054 Unit 205A Fug. - GME Coker Gas Plant Fugitives

FUG 0054 Unit 205A Fug. - GME Coker Gas Plant Fugitives

427	[40 CFR 60.592a(a)]	Comply with the requirements of 40 CFR 60.482-1a to 482-10a as soon as practicable, but no later than 180 days after initial startup. Subpart GGGa. [40 CFR 60.592a(a)]
428	[40 CFR 60.592a(d)]	Comply with the provisions of 40 CFR 60.485a except as provided in 40 CFR 60.593a. Subpart GGGa. [40 CFR 60.592a(d)]
429	[40 CFR 60.592a(e)]	Comply with the provisions of 40 CFR 60.486a and 60.487a. Subpart GGGa. [40 CFR 60.592a(e)]
430	[40 CFR 63.648]	Compliance with all the applicable requirements of NSPS, 40 CFR 60, Subpart GGGa has been determined to be compliance in accordance with NESHAP, Subpart CC - HAPs from Refineries; LAC 33:III.5109.a - Louisiana MACT for Refinery Equipment Leaks; and LAC 33.III.2121 - Fugitive Emission Control. [40 CFR 63.648, LAC 33:III.5109.A, LAC 33:III.2121, 40 CFR 60.590a]
431	[LAC 33:III.2111]	Equip all rotary pumps and compressors handling volatile organic compounds having a true vapor pressure of 1.5 psia or greater at handling conditions with mechanical seals or other equivalent equipment.
432	[LAC 33:III.509]	Permittee shall comply with the most stringent regulation program and the with the requirements of the Consent Decree for equipment leak definition. See Specific Condition No. 1 of the "STATE ONLY SPECIFIC CONDITIONS". [PSD-LA-719(M-1)]. [LAC 33:III.509, 40 CFR 52.21]

FUG 0055 Unit 210 Fug. - GME Crude/Vacuum Distillation Unit Fugitives

433	[40 CFR 60.592a(a)]	Comply with the requirements of 40 CFR 60.482-1a to 482-10a as soon as practicable, but no later than 180 days after initial startup. Subpart GGGa. [40 CFR 60.592a(a)]
434	[40 CFR 60.592a(d)]	Comply with the provisions of 40 CFR 60.485a except as provided in 40 CFR 60.593a. Subpart GGGa. [40 CFR 60.592a(d)]
435	[40 CFR 60.592a(e)]	Comply with the provisions of 40 CFR 60.486a and 60.487a. Subpart GGGa. [40 CFR 60.592a(e)]
436	[40 CFR 63.648]	Compliance with all the applicable requirements of NSPS, 40 CFR 60, Subpart GGGa has been determined to be compliance in accordance with NESHAP, Subpart CC - HAPs from Refineries; LAC 33:III.5109.a - Louisiana MACT for Refinery Equipment Leaks; and LAC 33.III.2121 - Fugitive Emission Control. [40 CFR 63.648, LAC 33:III.5109.A, LAC 33:III.2121, 40 CFR 60.590a]
437	[LAC 33:III.2111]	Equip all rotary pumps and compressors handling volatile organic compounds having a true vapor pressure of 1.5 psia or greater at handling conditions with mechanical seals or other equivalent equipment.
438	[LAC 33:III.509]	Permittee shall comply with the most stringent regulation program and the with the requirements of the Consent Decree for equipment leak definition. See Specific Condition No. 1 of the "STATE ONLY SPECIFIC CONDITIONS". [PSD-LA-719(M-1)]. [LAC 33:III.509, 40 CFR 52.21]

FUG 0056 Unit 211 Fug. - GME Naphtha Hydrotreater Unit Fugitives

439	[40 CFR 60.592a(a)]	Comply with the requirements of 40 CFR 60.482-1a to 482-10a as soon as practicable, but no later than 180 days after initial startup. Subpart GGGa. [40 CFR 60.592a(a)]
440	[40 CFR 60.592a(d)]	Comply with the provisions of 40 CFR 60.485a except as provided in 40 CFR 60.593a. Subpart GGGa. [40 CFR 60.592a(d)]
441	[40 CFR 60.592a(e)]	Comply with the provisions of 40 CFR 60.486a and 60.487a. Subpart GGGa. [40 CFR 60.592a(e)]

FUG 0056 Unit 211 Fug. - GME Naphtha Hydrotreater Unit Fugitives

442	[40 CFR 63.648]	Compliance with all the applicable requirements of NSPS, 40 CFR 60, Subpart GGGa has been determined to be compliance in accordance with NESHAP, Subpart CC - HAPs from Refineries; LAC 33:III.5109.a - Louisiana MACT for Refinery Equipment Leaks; and LAC 33.III.2121 - Fugitive Emission Control. [40 CFR 63.648, LAC 33:III.5109.A, LAC 33:III.2121, 40 CFR 60.590a]
443	[LAC 33:III.2111]	Equip all rotary pumps and compressors handling volatile organic compounds having a true vapor pressure of 1.5 psia or greater at handling conditions with mechanical seals or other equivalent equipment.
444	[LAC 33:III.509]	Permittee shall comply with the most stringent regulation program and the with the requirements of the Consent Decree for equipment leak definition. See Specific Condition No. 1 of the "STATE ONLY SPECIFIC CONDITIONS". [PSD-LA-719(M-1)]. [LAC 33:III.509, 40 CFR 52.21]

FUG 0057 Unit 212 Fug. - GME CCR Platformer Unit Fugitives

445	[40 CFR 60.592a(a)]	Comply with the requirements of 40 CFR 60.482-1a to 482-10a as soon as practicable, but no later than 180 days after initial startup. Subpart GGGa. [40 CFR 60.592a(a)]
446	[40 CFR 60.592a(d)]	Comply with the provisions of 40 CFR 60.485a except as provided in 40 CFR 60.593a. Subpart GGGa. [40 CFR 60.592a(d)]
447	[40 CFR 60.592a(e)]	Comply with the provisions of 40 CFR 60.486a and 60.487a. Subpart GGGa. [40 CFR 60.592a(e)]
448	[40 CFR 63.648]	Compliance with all the applicable requirements of NSPS, 40 CFR 60, Subpart GGGa has been determined to be compliance in accordance with NESHAP, Subpart CC - HAPs from Refineries; LAC 33:III.5109.a - Louisiana MACT for Refinery Equipment Leaks; and LAC 33.III.2121 - Fugitive Emission Control. [40 CFR 63.648, LAC 33:III.5109.A, LAC 33:III.2121, 40 CFR 60.590a]
449	[LAC 33:III.2111]	Equip all rotary pumps and compressors handling volatile organic compounds having a true vapor pressure of 1.5 psia or greater at handling conditions with mechanical seals or other equivalent equipment.
450	[LAC 33:III.509]	Permittee shall comply with the most stringent regulation program and the with the requirements of the Consent Decree for equipment leak definition. See Specific Condition No. 1 of the "STATE ONLY SPECIFIC CONDITIONS". [PSD-LA-719(M-1)]. [LAC 33:III.509, 40 CFR 52.21]

FUG 0058 Unit 212A Fug. - GME Platformer Unit (Perchloroethylene) Fugitives

451	[40 CFR 60.592a(a)]	Comply with the requirements of 40 CFR 60.482-1a to 482-10a as soon as practicable, but no later than 180 days after initial startup. Subpart GGGa. [40 CFR 60.592a(a)]
452	[40 CFR 60.592a(d)]	Comply with the provisions of 40 CFR 60.485a except as provided in 40 CFR 60.593a. Subpart GGGa. [40 CFR 60.592a(d)]
453	[40 CFR 60.592a(e)]	Comply with the provisions of 40 CFR 60.486a and 60.487a. Subpart GGGa. [40 CFR 60.592a(e)]
454	[40 CFR 63.648]	Compliance with all the applicable requirements of NSPS, 40 CFR 60, Subpart GGGa has been determined to be compliance in accordance with NESHAP, Subpart CC - HAPs from Refineries; LAC 33:III.5109.a - Louisiana MACT for Refinery Equipment Leaks; and LAC 33.III.2121 - Fugitive Emission Control. [40 CFR 63.648, LAC 33:III.5109.A, LAC 33:III.2121, 40 CFR 60.590a]
455	[LAC 33:III.2111]	Equip all rotary pumps and compressors handling volatile organic compounds having a true vapor pressure of 1.5 psia or greater at handling conditions with mechanical seals or other equivalent equipment.

FUG 0058 Unit 212A Fug. - GME Platformer Unit (Perchloroethylene) Fugitives

456	[LAC 33:III.509]	Permittee shall comply with the most stringent regulation program and the with the requirements of the Consent Decree for equipment leak definition. See Specific Condition No. 1 of the "STATE ONLY SPECIFIC CONDITIONS". [PSD-LA-719(M-1)]. [LAC 33:III.509, 40 CFR 52.21]

FUG 0059 Unit 214 Fug. - GME Kerosene Hydrotreater Unit Fugitives

457	[40 CFR 60.592a(a)]	Comply with the requirements of 40 CFR 60.482-1a to 482-10a as soon as practicable, but no later than 180 days after initial startup. Subpart GGGa. [40 CFR 60.592a(a)]
458	[40 CFR 60.592a(d)]	Comply with the provisions of 40 CFR 60.485a except as provided in 40 CFR 60.593a. Subpart GGGa. [40 CFR 60.592a(d)]
459	[40 CFR 60.592a(e)]	Comply with the provisions of 40 CFR 60.486a and 60.487a. Subpart GGGa. [40 CFR 60.592a(e)]
460	[LAC 33:III.2111]	Equip all rotary pumps and compressors handling volatile organic compounds having a true vapor pressure of 1.5 psia or greater at handling conditions with mechanical seals or other equivalent equipment.
461	[LAC 33:III.2121]	Compliance with all the applicable requirements of NSPS, 40 CFR 60, Subpart GGGa - Equipment Leaks of VOC in Petroleum Refinery is deemed as compliance with LAC 33.III.2121 - Fugitive Emission Control. [LAC 33:III.2121, 40 CFR 60.590a]
462	[LAC 33:III.509]	Permittee shall comply with the most stringent regulation program and the with the requirements of the Consent Decree for equipment leak definition. See Specific Condition No. 1 of the "STATE ONLY SPECIFIC CONDITIONS". [PSD-LA-719(M-1)]. [LAC 33:III.509, 40 CFR 52.21]

FUG 0060 Unit 215 Fug. - GME Hydrocracker Fugitives

463	[40 CFR 60.592a(a)]	Comply with the requirements of 40 CFR 60.482-1a to 482-10a as soon as practicable, but no later than 180 days after initial startup. Subpart GGGa. [40 CFR 60.592a(a)]
464	[40 CFR 60.592a(d)]	Comply with the provisions of 40 CFR 60.485a except as provided in 40 CFR 60.593a. Subpart GGGa. [40 CFR 60.592a(d)]
465	[40 CFR 60.592a(e)]	Comply with the provisions of 40 CFR 60.486a and 60.487a. Subpart GGGa. [40 CFR 60.592a(e)]
466	[40 CFR 63.648]	Compliance with all the applicable requirements of NSPS, 40 CFR 60, Subpart GGGa has been determined to be compliance in accordance with NESHAP, Subpart CC - HAPs from Refineries; LAC 33:III.5109.a - Louisiana MACT for Refinery Equipment Leaks; and LAC 33.III.2121 - Fugitive Emission Control. [40 CFR 63.648, LAC 33:III.5109.A, LAC 33:III.2121, 40 CFR 60.590a]
467	[LAC 33:III.2111]	Equip all rotary pumps and compressors handling volatile organic compounds having a true vapor pressure of 1.5 psia or greater at handling conditions with mechanical seals or other equivalent equipment.
468	[LAC 33:III.509]	Permittee shall comply with the most stringent regulation program and the with the requirements of the Consent Decree for equipment leak definition. See Specific Condition No. 1 of the "STATE ONLY SPECIFIC CONDITIONS". [PSD-LA-719(M-1)]. [LAC 33:III.509, 40 CFR 52.21]

FUG 0061 Unit 220 Fug. - GME Sulfur Recovery Plant No. 1 Fugitives

469	[40 CFR 60.590a]	Compliance with all the applicable requirements of NSPS, 40 CFR 60, Subpart GGGa - Equipment Leaks of VOC in Petroleum Refinery is deemed as compliance with LAC 33.III.2121 - Fugitive Emission Control. [40 CFR 60.590a, LAC 33:III.2121]

FUG 0061 Unit 220 Fug. - GME Sulfur Recovery Plant No. 1 Fugitives

470	[40 CFR 60.592a(a)]	Comply with the requirements of 40 CFR 60.482-1a to 482-10a as soon as practicable, but no later than 180 days after initial startup. Subpart GGGa. [40 CFR 60.592a(a)]
471	[40 CFR 60.592a(d)]	Comply with the provisions of 40 CFR 60.485a except as provided in 40 CFR 60.593a. Subpart GGGa. [40 CFR 60.592a(d)]
472	[40 CFR 60.592a(e)]	Comply with the provisions of 40 CFR 60.486a and 60.487a. Subpart GGGa. [40 CFR 60.592a(e)]
473	[LAC 33:III.2111]	Equip all rotary pumps and compressors handling volatile organic compounds having a true vapor pressure of 1.5 psia or greater at handling conditions with mechanical seals or other equivalent equipment.
474	[LAC 33:III.509]	Permittee shall comply with the most stringent regulation program and the with the requirements of the Consent Decree for equipment leak definition. See Specific Condition No. 1 of the "STATE ONLY SPECIFIC CONDITIONS". [PSD-LA-719(M-1)]. [LAC 33:III.509, 40 CFR 52.21]

FUG 0062 Unit 221 Fug. - GME Tail Gas Amine Regeneration for SRU No. 1 Fugitives

475	[40 CFR 60.592a(a)]	Comply with the requirements of 40 CFR 60.482-1a to 482-10a as soon as practicable, but no later than 180 days after initial startup. Subpart GGGa. [40 CFR 60.592a(a)]
476	[40 CFR 60.592a(d)]	Comply with the provisions of 40 CFR 60.485a except as provided in 40 CFR 60.593a. Subpart GGGa. [40 CFR 60.592a(d)]
477	[40 CFR 60.592a(e)]	Comply with the provisions of 40 CFR 60.486a and 60.487a. Subpart GGGa. [40 CFR 60.592a(e)]
478	[LAC 33:III.2111]	Equip all rotary pumps and compressors handling volatile organic compounds having a true vapor pressure of 1.5 psia or greater at handling conditions with mechanical seals or other equivalent equipment.
479	[LAC 33:III.2121]	Compliance with all the applicable requirements of NSPS, 40 CFR 60, Subpart GGGa - Equipment Leaks of VOC in Petroleum Refinery is deemed as compliance with LAC 33.III.2121 - Fugitive Emission Control. [LAC 33:III.2121, 40 CFR 60.590a]
480	[LAC 33:III.509]	Permittee shall comply with the most stringent regulation program and the with the requirements of the Consent Decree for equipment leak definition. See Specific Condition No. 1 of the "STATE ONLY SPECIFIC CONDITIONS". [PSD-LA-719(M-1)]. [LAC 33:III.509, 40 CFR 52.21]

FUG 0063 Unit 222 Fug. - GME Saturates Gas Plant Fugitives

481	[40 CFR 60.592a(a)]	Comply with the requirements of 40 CFR 60.482-1a to 482-10a as soon as practicable, but no later than 180 days after initial startup. Subpart GGGa. [40 CFR 60.592a(a)]
482	[40 CFR 60.592a(d)]	Comply with the provisions of 40 CFR 60.485a except as provided in 40 CFR 60.593a. Subpart GGGa. [40 CFR 60.592a(d)]
483	[40 CFR 60.592a(e)]	Comply with the provisions of 40 CFR 60.486a and 60.487a. Subpart GGGa. [40 CFR 60.592a(e)]
484	[40 CFR 63.648]	Compliance with all the applicable requirements of NSPS, 40 CFR 60, Subpart GGGa has been determined to be compliance in accordance with NESHAP, Subpart CC - HAPs from Refineries; LAC 33:III.5109.a - Louisiana MACT for Refinery Equipment Leaks; and LAC 33.III.2121 - Fugitive Emission Control. [40 CFR 63.648, LAC 33:III.5109.A, LAC 33:III.2121, 40 CFR 60.590a]
485	[LAC 33:III.2111]	Equip all rotary pumps and compressors handling volatile organic compounds having a true vapor pressure of 1.5 psia or greater at handling conditions with mechanical seals or other equivalent equipment.

FUG 0063 Unit 222 Fug. - GME Saturates Gas Plant Fugitives

486	[LAC 33:III.509]	Permittee shall comply with the most stringent regulation program and the with the requirements of the Consent Decree for equipment leak definition. See Specific Condition No. 1 of the "STATE ONLY SPECIFIC CONDITIONS". [PSD-LA-719(M-1)]. [LAC 33:III.509, 40 CFR 52.21]

FUG 0064 Unit 222A Fug. - GME Sat Propane Merox Unit Fugitives

487	[40 CFR 60.592a(a)]	Comply with the requirements of 40 CFR 60.482-1a to 482-10a as soon as practicable, but no later than 180 days after initial startup. Subpart GGGa. [40 CFR 60.592a(a)]
488	[40 CFR 60.592a(d)]	Comply with the provisions of 40 CFR 60.485a except as provided in 40 CFR 60.593a. Subpart GGGa. [40 CFR 60.592a(d)]
489	[40 CFR 60.592a(e)]	Comply with the provisions of 40 CFR 60.486a and 60.487a. Subpart GGGa. [40 CFR 60.592a(e)]
490	[LAC 33:III.2111]	Equip all rotary pumps and compressors handling volatile organic compounds having a true vapor pressure of 1.5 psia or greater at handling conditions with mechanical seals or other equivalent equipment.
491	[LAC 33:III.2121]	Compliance with all the applicable requirements of NSPS, 40 CFR 60, Subpart GGGa - Equipment Leaks of VOC in Petroleum Refinery is deemed as compliance with LAC 33.III.2121 - Fugitive Emission Control. [LAC 33:III.2121, 40 CFR 60.590a]
492	[LAC 33:III.509]	Permittee shall comply with the most stringent regulation program and the with the requirements of the Consent Decree for equipment leak definition. See Specific Condition No. 1 of the "STATE ONLY SPECIFIC CONDITIONS". [PSD-LA-719(M-1)]. [LAC 33:III.509, 40 CFR 52.21]

FUG 0065 Unit 222B Fug. - GME Sat Butane Merox Unit Fugitives

493	[40 CFR 60.592a(a)]	Comply with the requirements of 40 CFR 60.482-1a to 482-10a as soon as practicable, but no later than 180 days after initial startup. Subpart GGGa. [40 CFR 60.592a(a)]
494	[40 CFR 60.592a(d)]	Comply with the provisions of 40 CFR 60.485a except as provided in 40 CFR 60.593a. Subpart GGGa. [40 CFR 60.592a(d)]
495	[40 CFR 60.592a(e)]	Comply with the provisions of 40 CFR 60.486a and 60.487a. Subpart GGGa. [40 CFR 60.592a(e)]
496	[LAC 33:III.2111]	Equip all rotary pumps and compressors handling volatile organic compounds having a true vapor pressure of 1.5 psia or greater at handling conditions with mechanical seals or other equivalent equipment.
497	[LAC 33:III.2121]	Compliance with all the applicable requirements of NSPS, 40 CFR 60, Subpart GGGa - Equipment Leaks of VOC in Petroleum Refinery is deemed as compliance with LAC 33.III.2121 - Fugitive Emission Control. [LAC 33:III.2121, 40 CFR 60.590a]
498	[LAC 33:III.509]	Permittee shall comply with the most stringent regulation program and the with the requirements of the Consent Decree for equipment leak definition. See Specific Condition No. 1 of the "STATE ONLY SPECIFIC CONDITIONS". [PSD-LA-719(M-1)]. [LAC 33:III.509, 40 CFR 52.21]

FUG 0066 Unit 232 Fug. - GME Tail Gas Amine Regeneration for SRU No. 2 Fugitives

499	[40 CFR 60.592a(a)]	Comply with the requirements of 40 CFR 60.482-1a to 482-10a as soon as practicable, but no later than 180 days after initial startup. Subpart GGGa. [40 CFR 60.592a(a)]
500	[40 CFR 60.592a(d)]	Comply with the provisions of 40 CFR 60.485a except as provided in 40 CFR 60.593a. Subpart GGGa. [40 CFR 60.592a(d)]

FUG 0066 Unit 232 Fug. - GME Tail Gas Amine Regeneration for SRU No. 2 Fugitives

501	[40 CFR 60.592a(e)]	Comply with the provisions of 40 CFR 60.486a and 60.487a. Subpart GGGa. [40 CFR 60.592a(e)]
502	[LAC 33:III.2111]	Equip all rotary pumps and compressors handling volatile organic compounds having a true vapor pressure of 1.5 psia or greater at handling conditions with mechanical seals or other equivalent equipment.
503	[LAC 33:III.2121]	Compliance with all the applicable requirements of NSPS, 40 CFR 60, Subpart GGGa - Equipment Leaks of VOC in Petroleum Refinery is deemed as compliance with LAC 33.III.2121 - Fugitive Emission Control. [LAC 33:III.2121, 40 CFR 60.590a]
504	[LAC 33:III.509]	Permittee shall comply with the most stringent regulation program and the with the requirements of the Consent Decree for equipment leak definition. See Specific Condition No. 1 of the "STATE ONLY SPECIFIC CONDITIONS". [PSD-LA-719(M-1)]. [LAC 33:III.509, 40 CFR 52.21]

FUG 0067 Unit 233 Fug. - GME Sour Water Stripper Unit Fugitives

505	[40 CFR 60.592a(a)]	Comply with the requirements of 40 CFR 60.482-1a to 482-10a as soon as practicable, but no later than 180 days after initial startup. Subpart GGGa. [40 CFR 60.592a(a)]
506	[40 CFR 60.592a(d)]	Comply with the provisions of 40 CFR 60.485a except as provided in 40 CFR 60.593a. Subpart GGGa. [40 CFR 60.592a(d)]
507	[40 CFR 60.592a(e)]	Comply with the provisions of 40 CFR 60.486a and 60.487a. Subpart GGGa. [40 CFR 60.592a(e)]
508	[LAC 33:III.2111]	Equip all rotary pumps and compressors handling volatile organic compounds having a true vapor pressure of 1.5 psia or greater at handling conditions with mechanical seals or other equivalent equipment.
509	[LAC 33:III.2121]	Compliance with all the applicable requirements of NSPS, 40 CFR 60, Subpart GGGa - Equipment Leaks of VOC in Petroleum Refinery is deemed as compliance with LAC 33.III.2121 - Fugitive Emission Control. [LAC 33:III.2121, 40 CFR 60.590a]
510	[LAC 33:III.509]	Permittee shall comply with the most stringent regulation program and the with the requirements of the Consent Decree for equipment leak definition. See Specific Condition No. 1 of the "STATE ONLY SPECIFIC CONDITIONS". [PSD-LA-719(M-1)]. [LAC 33:III.509, 40 CFR 52.21]

FUG 0068 Unit 234 Fug. - GME Sulfur Recovery Plant No. 2 Fugitives

511	[40 CFR 60.590a]	Compliance with all the applicable requirements of NSPS, 40 CFR 60, Subpart GGGa - Equipment Leaks of VOC in Petroleum Refinery is deemed as compliance with LAC 33.III.2121 - Fugitive Emission Control. [40 CFR 60.590a, LAC 33:III.2121]
512	[40 CFR 60.592a(a)]	Comply with the requirements of 40 CFR 60.482-1a to 482-10a as soon as practicable, but no later than 180 days after initial startup. Subpart GGGa. [40 CFR 60.592a(a)]
513	[40 CFR 60.592a(d)]	Comply with the provisions of 40 CFR 60.485a except as provided in 40 CFR 60.593a. Subpart GGGa. [40 CFR 60.592a(d)]
514	[40 CFR 60.592a(e)]	Comply with the provisions of 40 CFR 60.486a and 60.487a. Subpart GGGa. [40 CFR 60.592a(e)]
515	[LAC 33:III.2111]	Equip all rotary pumps and compressors handling volatile organic compounds having a true vapor pressure of 1.5 psia or greater at handling conditions with mechanical seals or other equivalent equipment.
516	[LAC 33:III.509]	Permittee shall comply with the most stringent regulation program and the with the requirements of the Consent Decree for equipment leak definition. See Specific Condition No. 1 of the "STATE ONLY SPECIFIC CONDITIONS". [PSD-LA-719(M-1)]. [LAC 33:III.509, 40 CFR 52.21]

FUG 0069 Unit 241 Fug. - GME Intermediate Product Unit Fugitives

517	[40 CFR 60.592a(a)]	Comply with the requirements of 40 CFR 60.482-1a to 482-10a as soon as practicable, but no later than 180 days after initial startup. Subpart GGGa. [40 CFR 60.592a(a)]
518	[40 CFR 60.592a(d)]	Comply with the provisions of 40 CFR 60.485a except as provided in 40 CFR 60.593a. Subpart GGGa. [40 CFR 60.592a(d)]
519	[40 CFR 60.592a(e)]	Comply with the provisions of 40 CFR 60.486a and 60.487a. Subpart GGGa. [40 CFR 60.592a(e)]
520	[40 CFR 63.648]	Compliance with all the applicable requirements of NSPS, 40 CFR 60, Subpart GGGa has been determined to be compliance in accordance with NESHAP, Subpart CC - HAPs from Refineries; LAC 33:III.5109.a - Louisiana MACT for Refinery Equipment Leaks; and LAC 33.III.2121 - Fugitive Emission Control. [40 CFR 63.648, LAC 33:III.5109.A, LAC 33:III.2121, 40 CFR 60.590a]
521	[LAC 33:III.2111]	Equip all rotary pumps and compressors handling volatile organic compounds having a true vapor pressure of 1.5 psia or greater at handling conditions with mechanical seals or other equivalent equipment.
522	[LAC 33:III.509]	Permittee shall comply with the most stringent regulation program and the with the requirements of the Consent Decree for equipment leak definition. See Specific Condition No. 1 of the "STATE ONLY SPECIFIC CONDITIONS". [PSD-LA-719(M-1)]. [LAC 33:III.509, 40 CFR 52.21]

FUG 0070 Unit 243 Fug. - GME Fuel Gas Treater Unit Fugitives

523	[40 CFR 60.592a(a)]	Comply with the requirements of 40 CFR 60.482-1a to 482-10a as soon as practicable, but no later than 180 days after initial startup. Subpart GGGa. [40 CFR 60.592a(a)]
524	[40 CFR 60.592a(d)]	Comply with the provisions of 40 CFR 60.485a except as provided in 40 CFR 60.593a. Subpart GGGa. [40 CFR 60.592a(d)]
525	[40 CFR 60.592a(e)]	Comply with the provisions of 40 CFR 60.486a and 60.487a. Subpart GGGa. [40 CFR 60.592a(e)]
526	[LAC 33:III.2111]	Equip all rotary pumps and compressors handling volatile organic compounds having a true vapor pressure of 1.5 psia or greater at handling conditions with mechanical seals or other equivalent equipment.
527	[LAC 33:III.2121]	Compliance with all the applicable requirements of NSPS, 40 CFR 60, Subpart GGGa - Equipment Leaks of VOC in Petroleum Refinery is deemed as compliance with LAC 33.III.2121 - Fugitive Emission Control. [LAC 33:III.2121, 40 CFR 60.590a]
528	[LAC 33:III.509]	Permittee shall comply with the most stringent regulation program and the with the requirements of the Consent Decree for equipment leak definition. See Specific Condition No. 1 of the "STATE ONLY SPECIFIC CONDITIONS". [PSD-LA-719(M-1)]. [LAC 33:III.509, 40 CFR 52.21]

FUG 0071 Unit 247 Fug. - GME Amine Regeneration Unit Fugitives

529	[40 CFR 60.592(a)]	Comply with the requirements of 40 CFR 60.482-1 to 482-10 as soon as practicable, but no later than 180 days after initial startup. Subpart GGG. [40 CFR 60.592(a)]
530	[40 CFR 60.592(d)]	Comply with the provisions of 40 CFR 60.485 except as provided in 40 CFR 60.593. Subpart GGG. [40 CFR 60.592(d)]
531	[40 CFR 60.592(e)]	Comply with the provisions of 40 CFR 60.486 and 60.487. Subpart GGG. [40 CFR 60.592(e)]
532	[40 CFR 60.592a(a)]	Comply with the requirements of 40 CFR 60.482-1a to 482-10a as soon as practicable, but no later than 180 days after initial startup. Subpart GGGa. [40 CFR 60.592a(a)]
533	[40 CFR 60.592a(d)]	Comply with the provisions of 40 CFR 60.485a except as provided in 40 CFR 60.593a. Subpart GGGa. [40 CFR 60.592a(d)]

FUG 0071 Unit 247 Fug. - GME Amine Regeneration Unit Fugitives

534	[40 CFR 60.592a(e)]	Comply with the provisions of 40 CFR 60.486a and 60.487a. Subpart GGGa. [40 CFR 60.592a(e)]
535	[LAC 33:III.2111]	Equip all rotary pumps and compressors handling volatile organic compounds having a true vapor pressure of 1.5 psia or greater at handling conditions with mechanical seals or other equivalent equipment.
536	[LAC 33:III.2121]	Compliance with all the applicable requirements of NSPS, 40 CFR 60, Subpart GGG - Equipment Leaks of VOC in Petroleum Refinery is deemed as compliance with LAC 33.III.2121 - Fugitive Emission Control. [LAC 33:III.2121, 40 CFR 60.590]
537	[LAC 33:III.509]	Permittee shall comply with the most stringent regulation program and the with the requirements of the Consent Decree for equipment leak definition. See Specific Condition No. 1 of the "STATE ONLY SPECIFIC CONDITIONS". [PSD-LA-719(M-1)]. [LAC 33:III.509, 40 CFR 52.21]

FUG 0072 Unit 250 Fug. - GME Marine Loading Dock No. 4 Unit Fugitives

538	[40 CFR 60.592a(a)]	Comply with the requirements of 40 CFR 60.482-1a to 482-10a as soon as practicable, but no later than 180 days after initial startup. Subpart GGGa. [40 CFR 60.592a(a)]
539	[40 CFR 60.592a(d)]	Comply with the provisions of 40 CFR 60.485a except as provided in 40 CFR 60.593a. Subpart GGGa. [40 CFR 60.592a(d)]
540	[40 CFR 60.592a(e)]	Comply with the provisions of 40 CFR 60.486a and 60.487a. Subpart GGGa. [40 CFR 60.592a(e)]
541	[40 CFR 63.648]	Compliance with all the applicable requirements of NSPS, 40 CFR 60, Subpart GGGa has been determined to be compliance in accordance with NESHAP, Subpart CC - HAPs from Refineries; LAC 33:III.5109.a - Louisiana MACT for Refinery Equipment Leaks; and LAC 33.III.2121 - Fugitive Emission Control. [40 CFR 63.648, LAC 33:III.5109.A, LAC 33:III.2121, 40 CFR 60.590a]
542	[LAC 33:III.2111]	Equip all rotary pumps and compressors handling volatile organic compounds having a true vapor pressure of 1.5 psia or greater at handling conditions with mechanical seals or other equivalent equipment.
543	[LAC 33:III.509]	Permittee shall comply with the most stringent regulation program and the with the requirements of the Consent Decree for equipment leak definition. See Specific Condition No. 1 of the "STATE ONLY SPECIFIC CONDITIONS". [PSD-LA-719(M-1)]. [LAC 33:III.509, 40 CFR 52.21]

FUG 0073 Unit 250A Fug. - GME Marine Vapor Combustor Fugitives

544	[40 CFR 60.592a(a)]	Comply with the requirements of 40 CFR 60.482-1a to 482-10a as soon as practicable, but no later than 180 days after initial startup. Subpart GGGa. [40 CFR 60.592a(a)]
545	[40 CFR 60.592a(d)]	Comply with the provisions of 40 CFR 60.485a except as provided in 40 CFR 60.593a. Subpart GGGa. [40 CFR 60.592a(d)]
546	[40 CFR 60.592a(e)]	Comply with the provisions of 40 CFR 60.486a and 60.487a. Subpart GGGa. [40 CFR 60.592a(e)]
547	[40 CFR 63.648]	Compliance with all the applicable requirements of NSPS, 40 CFR 60, Subpart GGGa has been determined to be compliance in accordance with NESHAP, Subpart CC - HAPs from Refineries; LAC 33:III.5109.a - Louisiana MACT for Refinery Equipment Leaks; and LAC 33.III.2121 - Fugitive Emission Control. [40 CFR 63.648, LAC 33:III.5109.A, LAC 33:III.2121, 40 CFR 60.590a]
548	[LAC 33:III.2111]	Equip all rotary pumps and compressors handling volatile organic compounds having a true vapor pressure of 1.5 psia or greater at handling conditions with mechanical seals or other equivalent equipment.

FUG 0073 Unit 250A Fug. - GME Marine Vapor Combustor Fugitives

549	[LAC 33:III.509]	Permittee shall comply with the most stringent regulation program and the with the requirements of the Consent Decree for equipment leak definition. See Specific Condition No. 1 of the "STATE ONLY SPECIFIC CONDITIONS". [PSD-LA-719(M-1)]. [LAC 33:III.509, 40 CFR 52.21]

FUG 0074 Unit 259 Fug. - GME Flare System Fugitives

550	[40 CFR 60.592a(a)]	Comply with the requirements of 40 CFR 60.482-1a to 482-10a as soon as practicable, but no later than 180 days after initial startup. Subpart GGGa. [40 CFR 60.592a(a)]
551	[40 CFR 60.592a(d)]	Comply with the provisions of 40 CFR 60.485a except as provided in 40 CFR 60.593a. Subpart GGGa. [40 CFR 60.592a(d)]
552	[40 CFR 60.592a(e)]	Comply with the provisions of 40 CFR 60.486a and 60.487a. Subpart GGGa. [40 CFR 60.592a(e)]
553	[40 CFR 63.648]	Compliance with all the applicable requirements of NSPS, 40 CFR 60, Subpart GGGa has been determined to be compliance in accordance with NESHAP, Subpart CC - HAPs from Refineries; LAC 33:III.5109.a - Louisiana MACT for Refinery Equipment Leaks; and LAC 33.III.2121 - Fugitive Emission Control. [40 CFR 63.648, LAC 33:III.5109.A, LAC 33:III.2121, 40 CFR 60.590a]
554	[LAC 33:III.2111]	Equip all rotary pumps and compressors handling volatile organic compounds having a true vapor pressure of 1.5 psia or greater at handling conditions with mechanical seals or other equivalent equipment.
555	[LAC 33:III.509]	Permittee shall comply with the most stringent regulation program and the with the requirements of the Consent Decree for equipment leak definition. See Specific Condition No. 1 of the "STATE ONLY SPECIFIC CONDITIONS". [PSD-LA-719(M-1)]. [LAC 33:III.509, 40 CFR 52.21]

FUG 0075 Unit 260 Fug. - GME Wastewater Treatment Plant Train No. 5 Fugitives

556	[40 CFR 60.592a(a)]	Comply with the requirements of 40 CFR 60.482-1a to 482-10a as soon as practicable, but no later than 180 days after initial startup. Subpart GGGa. [40 CFR 60.592a(a)]
557	[40 CFR 60.592a(d)]	Comply with the provisions of 40 CFR 60.485a except as provided in 40 CFR 60.593a. Subpart GGGa. [40 CFR 60.592a(d)]
558	[40 CFR 60.592a(e)]	Comply with the provisions of 40 CFR 60.486a and 60.487a. Subpart GGGa. [40 CFR 60.592a(e)]
559	[LAC 33:III.2111]	Equip all rotary pumps and compressors handling volatile organic compounds having a true vapor pressure of 1.5 psia or greater at handling conditions with mechanical seals or other equivalent equipment.
560	[LAC 33:III.2121]	Compliance with all the applicable requirements of NSPS, 40 CFR 60, Subpart GGGa - Equipment Leaks of VOC in Petroleum Refinery is deemed as compliance with LAC 33.III.2121 - Fugitive Emission Control. [LAC 33:III.2121, 40 CFR 60.590a]
561	[LAC 33:III.509]	Permittee shall comply with the most stringent regulation program and the with the requirements of the Consent Decree for equipment leak definition. See Specific Condition No. 1 of the "STATE ONLY SPECIFIC CONDITIONS". [PSD-LA-719(M-1)]. [LAC 33:III.509, 40 CFR 52.21]

FUG 0076 Unit 263 Fug. - GME Interconnecting Pipeway Fugitives

562	[40 CFR 60.592a(a)]	Comply with the requirements of 40 CFR 60.482-1a to 482-10a as soon as practicable, but no later than 180 days after initial startup. Subpart GGGa. [40 CFR 60.592a(a)]

FUG 0076 Unit 263 Fug. - GME Interconnecting Pipeway Fugitives

563	[40 CFR 60.592a(d)]	Comply with the provisions of 40 CFR 60.485a except as provided in 40 CFR 60.593a. Subpart GGGa. [40 CFR 60.592a(d)]
564	[40 CFR 60.592a(e)]	Comply with the provisions of 40 CFR 60.486a and 60.487a. Subpart GGGa. [40 CFR 60.592a(e)]
565	[40 CFR 63.648]	Compliance with all the applicable requirements of NSPS, 40 CFR 60, Subpart GGGa has been determined to be compliance in accordance with NESHAP, Subpart CC - HAPs from Refineries; LAC 33:III.5109.a - Louisiana MACT for Refinery Equipment Leaks; and LAC 33.III.2121 - Fugitive Emission Control. [40 CFR 63.648, LAC 33:III.5109.A, LAC 33:III.2121, 40 CFR 60.590a]
566	[LAC 33:III.2111]	Equip all rotary pumps and compressors handling volatile organic compounds having a true vapor pressure of 1.5 psia or greater at handling conditions with mechanical seals or other equivalent equipment.
567	[LAC 33:III.509]	Permittee shall comply with the most stringent regulation program and the with the requirements of the Consent Decree for equipment leak definition. See Specific Condition No. 1 of the "STATE ONLY SPECIFIC CONDITIONS". [PSD-LA-719(M-1)]. [LAC 33:III.509, 40 CFR 52.21]

FUG 0077 Unit 265 Fug. - GME Truck Rack Fugitives

568	[40 CFR 60.590a]	Compliance with all the applicable requirements of NSPS, 40 CFR 60, Subpart GGGa - Equipment Leaks of VOC in Petroleum Refinery is deemed as compliance with LAC 33.III.2121 - Fugitive Emission Control. [40 CFR 60.590a, LAC 33:III.2121]
569	[40 CFR 60.592a(a)]	Comply with the requirements of 40 CFR 60.482-1a to 482-10a as soon as practicable, but no later than 180 days after initial startup. Subpart GGGa. [40 CFR 60.592a(a)]
570	[40 CFR 60.592a(d)]	Comply with the provisions of 40 CFR 60.485a except as provided in 40 CFR 60.593a. Subpart GGGa. [40 CFR 60.592a(d)]
571	[40 CFR 60.592a(e)]	Comply with the provisions of 40 CFR 60.486a and 60.487a. Subpart GGGa. [40 CFR 60.592a(e)]
572	[LAC 33:III.2111]	Equip all rotary pumps and compressors handling volatile organic compounds having a true vapor pressure of 1.5 psia or greater at handling conditions with mechanical seals or other equivalent equipment.
573	[LAC 33:III.509]	Permittee shall comply with the most stringent regulation program and the with the requirements of the Consent Decree for equipment leak definition. See Specific Condition No. 1 of the "STATE ONLY SPECIFIC CONDITIONS". [PSD-LA-719(M-1)]. [LAC 33:III.509, 40 CFR 52.21]
574	[LAC 33:III.509]	Permittee shall comply with the most stringent regulation program and the with the requirements of the Consent Decree for equipment leak definition. See Specific Condition No. 1 of the "STATE ONLY SPECIFIC CONDITIONS". [PSD-LA-719(M-1)]. [LAC 33:III.509, 40 CFR 52.21]

FUG 0078 Unit 267 Fug. - GME Blending Facilities Fugitives

575	[40 CFR 60.592a(a)]	Comply with the requirements of 40 CFR 60.482-1a to 482-10a as soon as practicable, but no later than 180 days after initial startup. Subpart GGGa. [40 CFR 60.592a(a)]
576	[40 CFR 60.592a(d)]	Comply with the provisions of 40 CFR 60.485a except as provided in 40 CFR 60.593a. Subpart GGGa. [40 CFR 60.592a(d)]
577	[40 CFR 60.592a(e)]	Comply with the provisions of 40 CFR 60.486a and 60.487a. Subpart GGGa. [40 CFR 60.592a(e)]

FUG 0078 Unit 267 Fug. - GME Blending Facilities Fugitives

578	[40 CFR 63.648]	Compliance with all the applicable requirements of NSPS, 40 CFR 60, Subpart GGGa has been determined to be compliance in accordance with NESHAP, Subpart CC - HAPs from Refineries; LAC 33:III.5109.a - Louisiana MACT for Refinery Equipment Leaks; and LAC 33.III.2121 - Fugitive Emission Control. [40 CFR 63.648, LAC 33:III.5109.A, LAC 33:III.2121, 40 CFR 60.590a]
579	[LAC 33:III.2111]	Equip all rotary pumps and compressors handling volatile organic compounds having a true vapor pressure of 1.5 psia or greater at handling conditions with mechanical seals or other equivalent equipment.
580	[LAC 33:III.509]	Permittee shall comply with the most stringent regulation program and the with the requirements of the Consent Decree for equipment leak definition. See Specific Condition No. 1 of the "STATE ONLY SPECIFIC CONDITIONS". [PSD-LA-719(M-1)]. [LAC 33:III.509, 40 CFR 52.21]

FUG 0079 Unit 271 Fug. - GME Barge Dock No. 3 Unit Fugitives

581	[40 CFR 60.592a(a)]	Comply with the requirements of 40 CFR 60.482-1a to 482-10a as soon as practicable, but no later than 180 days after initial startup. Subpart GGGa. [40 CFR 60.592a(a)]
582	[40 CFR 60.592a(d)]	Comply with the provisions of 40 CFR 60.485a except as provided in 40 CFR 60.593a. Subpart GGGa. [40 CFR 60.592a(d)]
583	[40 CFR 60.592a(e)]	Comply with the provisions of 40 CFR 60.486a and 60.487a. Subpart GGGa. [40 CFR 60.592a(e)]
584	[40 CFR 63.648]	Compliance with all the applicable requirements of NSPS, 40 CFR 60, Subpart GGGa has been determined to be compliance in accordance with NESHAP, Subpart CC - HAPs from Refineries; LAC 33:III.5109.A - Louisiana MACT for Refinery Equipment Leaks; and LAC 33:III.2121 - Fugitive Emission Control. [40 CFR 63.648; LAC 33:III.5109.A, LAC 33:III.2121]
585	[LAC 33:III.2111]	Equip all rotary pumps and compressors handling volatile organic compounds having a true vapor pressure of 1.5 psia or greater at handling conditions with mechanical seals or other equivalent equipment.
586	[LAC 33:III.509]	Permittee shall comply with the most stringent regulation program and the with the requirements of the Consent Decree for equipment leak definition. See Specific Condition No. 1 of the "STATE ONLY SPECIFIC CONDITIONS". [PSD-LA-719(M-1)]. [LAC 33:III.509, 40 CFR 52.21]

GRP 0028 GME FUG - GME Fugitive Cap

Group Members: FUG 0053 FUG 0054 FUG 0055 FUG 0056 FUG 0057 FUG 0058 FUG 0059 FUG 0074 FUG 0075 FUG 0076 FUG 0077 FUG 0078 FUG 0079 FUG 0060 FUG 0061 FUG 0062 FUG 0063 FUG 0064 FUG 0065 FUG 0066 FUG 0067 FUG 0068 FUG 0069 FUG 0070 FUG 0071 FUG 0072 FUG 0073

GRP 0028 GME FUG - GME Fugitive Cap

587 [40 CFR 52.21]

Permittee shall show compliance with the limits of this permit by maintaining the sum of the emissions (VOC, 320.71 TPY and SO2, 0.07 TPY) of the fugitive emission points listed below to no more than the emission limits listed in GME Fugitive Cap, GRP028. The sum of the fugitive emissions shall be calculated and recorded each month, as well as the sum of the fugitive emissions for the last twelve months. These records shall be kept on site and available for inspection by the Office of Environmental Compliance, Surveillance Division. The sum if the fugitive emissions above the maximum listed in this cap, GRP028, for any twelve consecutive month period shall be a violation of this permit and must be reported to the Office of Environmental Compliance, Enforcement Division. A report showing the sum of the fugitive emissions shall be submitted to the Office of Environmental Compliance, Surveillance Division by March 31 for the preceding calendar year.

Emission Points FUG52 thru FUG79. [40 CFR 52.21, LAC 33:III.509, LAC 33:III.501.C.6]

GRP 0029 GME HBC - GME Heater/Boiler Cap

Group Members: EQT 0185EQT 0186EQT 0187EQT 0188EQT 0189EQT 0190EQT 0191EQT 0192EQT 0193EQT 0195EQT 0196EQT 0197EQT 0198EQT 0199EQT 0201EQT 0202

588 [LAC 33:III.501.C.6]

Permittee shall continuously monitor the heat input to the individual equipment (boilers, heaters, and reboilers) referenced in this specific condition. Based on the monitored heat input and individual emission factors for the equipment, the permittee shall calculate emissions for each equipment. The total heat input to all the equipment shall not exceed 3387.59 MM BTU/hr (High Heating Value annual average) and the total calculated emissions from all the equipment shall not exceed PM10, 110.56 tons per year (TPY); SO2, 214.88 TPY; NOx, 371.70 TPY; CO, 318.19 TPY; and VOC, 22.26 TPY. Emissions from these equipment shall be reported under an emission cap, Emission Point GME HBC (GRP029). The total heat input and the calculated emissions of the individual euipment shall be recorded each month, as well as the heat input and the total calculated emissions for all the equipment for the last twelve months. These records shall be kept on site and available for inspection by the Office of Environmental Compliance, Surveillance Division. Total heat input and the calculated emissions from the equipment above the maximum listed in this specific condition for any twelve consecutive month period shall be a violation of this permit and must be reported to the Office of Environmental Compliance, Enforcement Division. A report showing the heat input of the individual equipment and the overall total heat input and the emissions shall be submitted to the Office of Environmental Compliance, Surveillance Division by March 31 for the preceding calendar year.

Emission Points 1-08 thru 6-08, 7A-08, 7B-08, 7C-08, 9-08 thru 13-08, 15-08, and 16-08. [LAC 33:III.501.C.6, 40 CFR 52.21, LAC 33:III.509]

GRP 0030 GME TOC - GME Thermal Oxidizer Cap

Group Members: EQT 0204EQT 0205

GRP 0030 GME TOC - GME Thermal Oxidizer Cap

589 [40 CFR 52.21]

Permittee shall continuously monitor the heat input to the thermal oxidizers referenced in this specific condition. Based on the monitored heat input and individual emission factors for each thermal oxidizer the permittee shall calculate emissions for each thermal oxidizer. The total heat input to all the thermal oxidizers shall not exceed 101.96 MM BTU/hr (High Heating Value annual average) and the total calculated emissions from al the thermal oxidizers shall not exceed PM10, 3.33 tons per year (TPY); SO2, 201.83 TPY; NOx, 89.32 TPY; CO, 17.86 TPY; and VOC, 0.18 TPY. Emissions from the thermal oxidizers shall be reported under an emission cap, Emission Point GME TOC (GRP030). The total heat input and the calculated emissions of the individual thermal oxidizer shall be recorded each month, as well as the heat input and the total calculated emissions for all the thermal oxidizers for the last twelve months. These records shall be kept on site and available for inspection by the Office of Environmental Compliance, Surveillance Division. Total heat input and the calculated emissions from the thermal oxidizers above the maxmum listed in this specific condition for any twelve consecutive month period shall be a violation of this permit and must be reported to the Office of Environmental Compliance, Enforcement Division. A report showing the heat input of each thermal oxidizer and the overall total heat input and the emissions shall be submitted to the Office of Environmental Compliance, Surveillance Division by March 31 for the preceding calendar year.

Emission Points 18-08 and 19-08. [40 CFR 52.21, LAC 33:III.509, LAC 33:III.501.C.6]

GRP 0035 GME GST - GME Gasoline Storage Tanks CAP

Group Members: EQT 0247EQT 0248

590 [LAC 33:III.507]

Permittee shall show compliance with the limits of this permit by maintaining the total overall calculated VOC emissions, Emission Point GME GST (CAP) based on the throughput of the stored material from all the tanks listed below to no more than 1.89 tons per year. The overall VOC emission of the tanks shall be calculated using tank throughput and recorded each month, as well as the VOC emission calculated for all the tanks for the last twelve months. These records shall be kept on site and available for inspection by the Department of Environmental Quality personnel. Total overall calculated VOC emissions from the tanks above the maximum listed in this specific condition for any twelve consecutive month period shall be a violation of this permit and must be reported to the Office of Environmental Compliance, Enforcement Division.

Emission Points 1-07 and 2-07.

UNF 0002 GME - GME Facility

591 [40 CFR 60.692-2(a)(1)] Equip each drain with water seal controls. Subpart QQQ. [40 CFR 60.692-2(a)(1)]

592 [40 CFR 60.692-2(a)(2)] Equipment/operational data monitored by visual inspection/determination once initially and monthly thereafter. Monitor drains in active service for indications of low water levels or other conditions that would reduce the effectiveness of the water seal controls. Subpart QQQ. [40 CFR 60.692-2(a)(2)]
Which Months: All Year Statistical Basis: None specified

UNF 0002 GME - GME Facility

593	[40 CFR 60.692-2(a)(3)]	Equipment/operational data monitored by visual inspection/determination once initially and weekly thereafter. Monitor drains out of active service for indications of low water levels or other problems that could result in VOC emissions. Subpart QQQ. [40 CFR 60.692-2(a)(3)] Which Months: All Year Statistical Basis: None specified
594	[40 CFR 60.692-2(a)(4)]	Equipment/operational data monitored by technically sound method once initially and semiannually thereafter. Monitor the tightly sealed cap or plug over a drain that is out of service to ensure cap or plug are in place and properly installed. Subpart QQQ. [40 CFR 60.692-2(a)(4)] Which Months: All Year Statistical Basis: None specified
595	[40 CFR 60.692-2(a)(5)]	Add water or make first attempts at repair as soon as practicable, but not later than 24 hours after low water levels or missing or improperly installed caps or plugs are detected, except as specified in 40 CFR 60.692-6. Subpart QQQ. [40 CFR 60.692-2(a)(5)]
596	[40 CFR 60.692-2(b)(1)]	Junction boxes: Equip with a cover. Ensure vent pipes are at least 90 cm (3 ft) in length and do not exceed 10.2 cm (4 in) in diameter. Subpart QQQ. [40 CFR 60.692-2(b)(1)]
597	[40 CFR 60.692-2(b)(2)]	Junction boxes: Cover must have a tight seal around the edge and be kept in place at all times, except during inspection and maintenance. Subpart QQQ. [40 CFR 60.692-2(b)(2)]
598	[40 CFR 60.692-2(b)(3)]	Junction boxes: Equipment/operational data monitored by visual inspection/determination once initially and semiannually thereafter. Monitor to ensure the cover is in place and to ensure that the cover has a tight seal around the edge. Subpart QQQ. [40 CFR 60.692-2(b)(3)] Which Months: All Year Statistical Basis: None specified
599	[40 CFR 60.692-2(b)(4)]	Junction boxes: Make a first effort at repair as soon as practicable, but not later than 15 calendar days after a broken seal or gap is identified, except as provided in 40 CFR 60.692-6. Subpart QQQ. [40 CFR 60.692-2(b)(4)]
600	[40 CFR 60.692-2(c)(1)]	Sewer lines: Ensure that sewer lines are not open to the atmosphere and are covered or enclosed in a manner so as to have no visual gaps or cracks in joints, seals, or other emission interfaces. Subpart QQQ. [40 CFR 60.692-2(c)(1)]
601	[40 CFR 60.692-2(c)(2)]	Sewer lines: Equipment/operational data monitored by visual inspection/determination once initially and semiannually thereafter. Monitor the portion of each unburied sewer line for indication of cracks, gaps, or other problems that could result in VOC emissions. Subpart QQQ. [40 CFR 60.692-2(c)(2)] Which Months: All Year Statistical Basis: None specified
602	[40 CFR 60.692-2(c)(3)]	Sewer lines: Make repairs as soon as practicable, but not later than 15 calendar days after cracks, gaps, or other problems are detected, except as specified in 40 CFR 60.692-6. Subpart QQQ. [40 CFR 60.692-2(c)(3)]
603	[40 CFR 60.692-2(e)]	Do not route refinery wastewater routed through new drains and a new first common downstream junction box, either as part of a new or existing individual drain system, through a downstream catch basin. Subpart QQQ. [40 CFR 60.692-2(e)]
604	[40 CFR 60.692-3(a)]	Equip and operate each oil-water separator tank, slop oil tank, storage vessel, or other auxiliary equipment with a fixed roof, which meets the specifications in 40 CFR 60.692-3(a)(1) through (a)(5), except as provided in 40 CFR 60.692-3(d) or 60.693-2. Subpart QQQ. [40 CFR 60.692-3(a)]
605	[40 CFR 60.692-3(b)]	Equip and operate each oil-water separator tank or auxiliary equipment with a design capacity to treat more than 16 liters per second (250 gpm) with a closed vent system and control device, which meet the requirements 40 CFR 60.692-5, except as provided in 40 CFR 60.692-3(c) or 60.693-2. Subpart QQQ. [40 CFR 60.692-3(b)]

UNF 0002 GME - GME Facility

606	[40 CFR 60.692-3(c)]	Meet the requirements of 40 CFR 60.692-3(a), or comply with the requirements of 40 CFR 60.692-3(a) for the existing fixed roof covering a portion of the separator tank and comply with the requirements for floating roofs in 40 CFR 60.693-2 for the remainder of the separator tank. Subpart QQQ. [40 CFR 60.692-3(c)]
607	[40 CFR 60.692-3(e)]	Ensure that slop oil from an oil-water separator tank and oily wastewater from slop oil handling equipment is collected, stored, transported, recycled, reused, or disposed of in an enclosed system. Equip equipment used in handling slop oil with a fixed roof meeting the requirements of 40 CFR 60.692-3(a). Subpart QQQ. [40 CFR 60.692-3(e)]
608	[40 CFR 60.692-5(c)]	Comply with the requirements of 40 CFR 60.18. Subpart QQQ. [40 CFR 60.692-5(c)]
609	[40 CFR 60.692-5(e)(1)]	Closed vent system: Design and operate with no detectable emissions, as indicated by an instrument reading of less than 500 ppm above background, as determined during the initial and semiannual inspections by the methods specified in 40 CFR 60.696. Subpart QQQ. [40 CFR 60.692-5(e)(1)]
610	[40 CFR 60.692-5(e)(2)]	Closed vent system: Purge to direct vapor to the control device. Subpart QQQ. [40 CFR 60.692-5(e)(2)]
611	[40 CFR 60.692-5(e)(3)]	Closed vent system: Install a flow indicator on a vent stream to a control device to ensure the vapors are being routed to the device. Subpart QQQ. [40 CFR 60.692-5(e)(3)]
612	[40 CFR 60.692-5(e)(5)]	Closed vent system: Make first efforts at repair to eliminate emissions as soon as practicable, but not later than 30 calendar days from the date emissions from a closed system are detected, except as provided in 40 CFR 60.692-6. Subpart QQQ. [40 CFR 60.692-5(e)(5)]
613	[40 CFR 60.695(a)(4)]	Comply with the monitoring requirements of 40 CFR 60.18(f)(2). Subpart QQQ. [40 CFR 60.695(a)(4)]
614	[40 CFR 60.696(a)]	Before using any equipment installed in compliance with 40 CFR 60.692-2, 60.692-3, 60.692-4, 60.692-5, or 60.693, inspect such equipment for indication of potential emissions, defects, or other problems that may cause requirements of 40 CFR 60 Subpart QQQ not to be met. Subpart QQQ. [40 CFR 60.696(a)]
615	[40 CFR 60.696(b)]	Use 40 CFR 60, Appendix A, Method 21 to measure emission concentrations, using 500 ppm as the no detectable emission limit. Calibrate the instrument each day before using. Subpart QQQ. [40 CFR 60.696(b)]
616	[40 CFR 60.696(c)]	Determine compliance by conducting a performance test initially, and at other times as requested by DEQ, using the test methods and procedures in 40 CFR 60.18(f). Subpart QQQ. [40 CFR 60.696(c)]
617	[40 CFR 60.697(a)]	Retain all records required by 40 CFR 60 Subpart QQQ for a period of 2 years after being recorded unless otherwise noted. Subpart QQQ. [40 CFR 60.697(a)]
618	[40 CFR 60.697(b)]	Inspection records recordkeeping by electronic or hard copy at the regulation's specified frequency. Keep the records specified in 40 CFR 60.697(b)(1) through (b)(3). Subpart QQQ. [40 CFR 60.697(b)]
619	[40 CFR 60.697(c)]	Inspection records recordkeeping by electronic or hard copy at the regulation's specified frequency. Keep records of the location, date, and corrective action for inspections required by 40 CFR 60.692-3(a) when a problem is identified that could result in VOC emissions. Subpart QQQ. [40 CFR 60.697(c)]
620	[40 CFR 60.697(d)]	Closed vent systems: Inspection records recordkeeping by electronic or hard copy at the regulation's specified frequency. Keep records of the location, date, and corrective action for inspections required by 40 CFR 60.692-5(e) during which detectable emissions are measured or a problem is identified that could result in VOC emissions. Subpart QQQ. [40 CFR 60.697(d)]
621	[40 CFR 60.697(e)]	Equipment/operational data recordkeeping by electronic or hard copy at the regulation's specified frequency. Keep the records specified in 40 CFR 60.697(e)(1) through (e)(4), as applicable. Subpart QQQ. [40 CFR 60.697(e)]

UNF 0002 GME - GME Facility

622	[40 CFR 60.697(f)]	Equipment/operational data recordkeeping by electronic or hard copy continuously. Keep the records specified in 40 CFR 60.697(f)(1) through (f)(3) for the life of the source in a readily accessible location. Subpart QQQ. [40 CFR 60.697(f)]
623	[40 CFR 60.697(g)]	Equipment/operational data recordkeeping by electronic or hard copy at the regulation's specified frequency. Keep plans or specifications which indicate the location of out of active service drains covered by tightly sealed caps or plugs for the life of the facility in a readily accessible location. Subpart QQQ. [40 CFR 60.697(g)]
624	[40 CFR 60.698(b)(1)]	Submit Notification: Due within 60 days after initial startup. Submit a certification that the equipment necessary to comply with 40 CFR 60 Subpart QQQ has been installed and that the required initial inspections or tests of process drains, sewer lines, junction boxes, oil-water separators, and closed vent systems and control devices have been carried out in accordance with 40 CFR 60 Subpart QQQ. Thereafter, submit a certification semiannually that all of the required inspections have been carried out in accordance with 40 CFR 60 Subpart QQQ. Subpart QQQ. [40 CFR 60.698(b)(1)]
625	[40 CFR 60.698(b)(2)]	Submit Performance Test Results: Due within 60 days after initial startup, as required under 40 CFR 60.8(a). Submit a report of the results of the performance test required in 40 CFR 60.696(c). Subpart QQQ. [40 CFR 60.698(b)(2)]
626	[40 CFR 60.698(c)]	Submit report: Due initially and semiannually thereafter. Submit a report that summarizes all inspections when a water seal was dry or otherwise breached, when a drain cap or plug was missing or improperly installed, or when cracks, gaps, or other problems were identified that could result in VOC emissions, including information about the repairs or corrective action taken. Subpart QQQ. [40 CFR 60.698(c)]
627	[40 CFR 60.698(d)]	Submit report: Due semiannually. Submit a report containing the information specified in 40 CFR 60.698(d)(1) through (d)(3), as applicable. Subpart QQQ. [40 CFR 60.698(d)]
628	[40 CFR 60.]	All affected facilities shall comply with all applicable provisions in 40 CFR 60 Subpart A.
629	[40 CFR 61.145(b)(1)]	Provide DEQ with written notice of intention to demolish or renovate prior to performing activities to which 40 CFR 61 Subpart M applies. Delivery of the notice by U.S. Postal Service, commercial delivery service, or hand delivery is acceptable. [40 CFR 61.145(b)(1)]
630	[40 CFR 61.148]	Do not install or reinstall on a facility component any insulating materials that contain commercial asbestos if the materials are either molded and friable or wet-applied and friable after drying. Subpart M.
631	[40 CFR 61.342(e)]	Benzene: Permittee shall comply with all the applicable requirements of the alternative requirements of paragraphs 40 CFR 61.342(c) and (d). The permittee shall manage and treat facility waste with a flow weighted annual average water content of less than 10 percent in accordance with 40 CFR 61.342(c)(1). The benzene quantity for the wastes described in 40 CFR 61.342(e)(2) shall be equal to or less than 6.6 tons per year, as determined in 40 CFR 61.355(k). Subpart FF. [40 CFR 61.342(e)]
632	[40 CFR 61.356(a)(4)]	Benzene: Permittee shall comply with all the applicable recordkeeping requirements as stated in 40 CFR 61.356 and all the applicable reporting requirements of 40 CFR 61.357. Subpart FF. [40 CFR 61.356(a)(4), 40 CFR 61.357]
633	[40 CFR 61.]	All affected facilities shall comply with all applicable provisions in 40 CFR 61 Subpart A.
634	[40 CFR 63.]	All affected facilities shall comply with all applicable provisions in 40 CFR 63 Subpart A.
635	[40 CFR 82.Subpart F]	Comply with the standards for recycling and emissions reduction pursuant to 40 CFR Part 82, Subpart F, except as provided for Motor Vehicle Air Conditioners (MVACs) in Subpart B.
636	[LAC 33:III.1103]	Emissions of smoke which pass onto or across a public road and create a traffic hazard by impairment of visibility as defined in LAC 33:III.111 or intensify an existing traffic hazard condition are prohibited.
637	[LAC 33:III.1109.B]	Outdoor burning of waste material or other combustible material is prohibited.

UNF 0002 GME - GME Facility

638	[LAC 33:III.1303.B]	Emissions of particulate matter which pass onto or across a public road and create a traffic hazard by impairment of visibility or intensify an existing traffic hazard condition are prohibited.
639	[LAC 33:III.1305]	Prevent particulate matter from becoming airborne by taking all reasonable precautions. These precautions shall include, but not be limited to, those specified in LAC 33:III.1305.A.1-7.
640	[LAC 33:III.2113.A]	Maintain best practical housekeeping and maintenance practices at the highest possible standards to reduce the quantity of organic compounds emissions. Good housekeeping shall include, but not be limited to, the practices listed in LAC 33:III.2113.A.1-5.
641	[LAC 33:III.2141.A]	Keep records and determine compliance as specified in LAC 33:III.2115.I, J, and K.
642	[LAC 33:III.2141.A]	Control emissions of volatile organic compounds from petroleum refinery process unit turnarounds by pumping the liquid contents to storage and depressurizing the processing units to five psig (pounds per square inch gauge) or below before venting to the atmosphere. Control the vapors during the depressurization prior to venting to atmosphere by one of the applicable methods specified in LAC 33:III.2115.A, B, and F.
643	[LAC 33:III.219]	Failure to pay the prescribed application fee or annual fee as provided herein, within 90 days after the due date, will constitute a violation of these regulations and shall subject the person to applicable enforcement actions under the Louisiana Environmental Quality Act including, but not limited to, revocation or suspension of the applicable permit, license, registration, or variance.
644	[LAC 33:III.2901.D]	Discharges of odorous substances at or beyond property lines which cause a perceived odor intensity of six or greater on the specified eight point butanol scale as determined by Method 41 of LAC 33:III.2901.G are prohibited.
645	[LAC 33:III.2901.F]	If requested to monitor for odor intensity, take and transport samples in a manner which minimizes alteration of the samples either by contamination or loss of material. Evaluate all samples as soon after collection as possible in accordance with the procedures set forth in LAC 33:III.2901.G.
646	[LAC 33:III.501.C.6]	Permittee shall comply with all the applicable requirements of the Prevention of Significant Deterioration Permit, Permit No. PSD-LA-719 and all the applicable requirements of the Consent Decree.
647	[LAC 33:III.509]	Comply with the requirements of PSD-LA-719(M-1) or the current permit. This permit includes provisions of the Prevention of Significant Deterioration (PSD) review from Permit PSD-LA-719(M-1) or the current permit.
648	[LAC 33:III.5105.A.1]	Do not construct or modify any stationary source subject to any standard set forth in LAC 33:III.Chapter 51.Subchapter A without first obtaining written authorization from DEQ in accordance with LAC 33:III.Chapter 51.Subchapter A, after the effective date of the standard.
649	[LAC 33:III.5105.A.2]	Do not cause a violation of any ambient air standard listed in LAC 33:III.Table 51.2, unless operating in accordance with LAC 33:III.5109.B.
650	[LAC 33:III.5105.A.3]	Do not build, erect, install, or use any article, machine, equipment, process, or method, the use of which conceals an emission that would otherwise constitute a violation of an applicable standard.
651	[LAC 33:III.5105.A.4]	Do not fail to keep records, notify, report or revise reports as required under LAC 33:III.Chapter 51.Subchapter A.
652	[LAC 33:III.5107.A.2]	Include emissions of all toxic air pollutants listed in LAC 33:III.5112, Table 51.1 or 51.3 in the Annual Emissions Report unless exempted under LAC 33:III.5105.B.
653	[LAC 33:III.5107.A.2]	Include a certification statement with the annual emission report and revisions to any emission report that attests that the information contained in the emission report is true, accurate, and complete, and that is signed by a responsible official, as defined in LAC 33:III.502. Include the full name of the responsible official, title, signature, date of signature and phone number of the responsible official.

UNF 0002 GME - GME Facility

654	[LAC 33:III.5107.A]	Submit Annual Emissions Report (TEDI): Due annually, by the 31st of March unless otherwise directed by DEQ, to the Office of Environmental Assessment in a format specified by DEQ. Identify the quantity of emissions in the previous calendar year for any toxic air pollutant listed in Table 51.1 or Table 51.3.
655	[LAC 33:III.5107.B.1]	Submit notification: Due to the Department of Public Safety 24-hour Louisiana Emergency Hazardous Materials Hotline at (225) 925-6595 immediately, but in no case later than 1 hour, after any discharge of a toxic air pollutant into the atmosphere that results or threatens to result in an emergency condition (a condition which could reasonably be expected to endanger the health and safety of the public, cause significant adverse impact to the land, water or air environment, or cause severe damage to property).
656	[LAC 33:III.5107.B.2]	Submit notification: Due to SPOC, except as provided in LAC 33:III.5107.B.6, no later than 24 hours after the beginning of any unauthorized discharge into the atmosphere of a toxic air pollutant as a result of bypassing an emission control device, when the emission control bypass was not the result of an upset, and the quantity of the unauthorized bypass is greater than or equal to the lower of the Minimum Emission Rate (MER) in LAC 33:III.5112, Table 51.1, or a reportable quantity (RQ) in LAC 33:I.3931, or the quantity of the unauthorized bypass is greater than one pound and there is no MER or RQ for the substance in question. Submit notification in the manner provided in LAC 33:I.3923.
657	[LAC 33:III.5107.B.3]	Submit notification: Due to SPOC, except as provided in LAC 33:III.5107.B.6, immediately, but in no case later than 24 hours after any unauthorized discharge of a toxic air pollutant into the atmosphere that does not cause an emergency condition, the rate or quantity of which is in excess of that allowed by permit, compliance schedule, or variance, or for upset events that exceed the reportable quantity in LAC 33:I.3931. Submit notification in the manner provided in LAC 33:I.3923.
658	[LAC 33:III.5107.B.4]	Submit written report: Due by certified mail to SPOC within seven calendar days of learning of any such discharge or equipment bypass as referred to in LAC 33:III.5107.B.1 through B.3. Include the information specified in LAC 33:III.5107.B.4.a.i through B.4.a.viii.
659	[LAC 33:III.5107.B.5]	Report all discharges to the atmosphere of a toxic air pollutant from a safety relief device, a line or vessel rupture, a sudden equipment failure, or a bypass of an emission control device, regardless of quantity, IF THEY CAN BE MEASURED AND CAN BE RELIABLY QUANTIFIED USING GOOD ENGINEERING PRACTICES, to DEQ along with the annual emissions report and where otherwise specified. Include the identity of the source, the date and time of the discharge, and the approximate total loss during the discharge.
660	[LAC 33:III.5109.A.1]	Control emissions of toxic air pollutants to a degree that constitutes Maximum Achievable Control Technology (MACT) as approved by DEQ.
661	[LAC 33:III.5109.A]	Pressure relief device in gas/vapor service: Equip with a closed-vent system capable of capturing and transporting leakage from the pressure relief device to a control device as described in Section N, as specified in Section F.2.b of the Louisiana MACT Determination for Refinery Equipment Leaks (July 26, 1994). Alternative to Subsections F.1 and F.2.
662	[LAC 33:III.5109.A]	Compressors (seal system): Operate with the barrier fluid at a pressure that is greater than the compressor stuffing box pressure, or equip with a barrier fluid system that is connected by a closed-vent system to a control device that complies with the requirements of Section N, or equip with a system that purges the barrier fluid into a process stream with zero VOTAP emission to the atmosphere, as specified in Subsection E.3 of the Louisiana MACT Determination for Refinery Equipment Leaks (July 26, 1994).
663	[LAC 33:III.5109.A]	Sampling connection systems: Equip with a closed-purge system or closed-vent system, except as provided for in Section C, as specified in Subsection G.1 of the Louisiana MACT Determination for Refinery Equipment Leaks (July 26, 1994). Ensure that this system collects or captures the sample purge for return to the process.

UNF 0002 GME - GME Facility

664	[LAC 33:III.5109.A]	Connectors in gas/vapor service and in light liquid service >= one inch in inside diameter size (unsafe-to-monitor): Determine that the connector is unsafe to monitor because personnel would be exposed to an immediate danger as a result of complying with Subsections O.2 through O.6, as specified in Subsection O.10.a of the Louisiana MACT Determination for Refinery Equipment Leaks (July 26, 1994). Comply with this requirement instead of the requirements in Subsection O.1.
665	[LAC 33:III.5109.A]	Connectors in gas/vapor service and in light liquid service >= one inch in inside diameter size (inaccessible or glass or glass-lined): Repair leaks as soon as practicable, but no later than 15 calendar days after detecting a leak by visual, audible, olfactory or other means, except as specified in Subsection O.8, as specified in Subsection O.11.b of the Louisiana MACT Determination for Refinery Equipment Leaks (July 26, 1994). Make a first attempt at repair no later than 5 calendar days after the leak is detected, as specified in Subsection O.11.c of the Louisiana MACT Determination for Refinery Equipment Leaks (July 26, 1994). Comply with this requirement instead of the monitoring requirements of Subsection O.2 through O.6 and the recordkeeping and reporting requirements.
666	[LAC 33:III.5109.A]	Equipment/operational data recordkeeping by electronic or hard copy continuously. Keep records of the information specified in Subsections Q.1 through Q.13 as applicable, as specified in Section Q of the Louisiana MACT Determination for Refinery Equipment Leaks (July 26, 1994).
667	[LAC 33:III.5109.A]	Compressors: Equipment/operational data monitored by technically sound method daily, as specified in Paragraph E.6.a of the Louisiana MACT Determination for Refinery Equipment Leaks (July 26, 1994). Check each sensor as required in Subsection E.5 daily or equip with an audible alarm unless the compressor is located within the boundary of an unmanned plant site. If the sensor indicates failure of the seal system, the barrier fluid system, or both based on criterion determined under Paragraph E.6.b, a leak is detected. If a leak is detected, initiate repair provisions specified in Subsection E.8. Which Months: All Year Statistical Basis: None specified
668	[LAC 33:III.5109.A]	Identify each piece of equipment in a process unit subject to this MACT determination such that it can be distinguished readily from equipment that is not subject to this MACT determination, as specified in Subsection C.3 of the Louisiana MACT Determination for Refinery Equipment Leaks (July 26, 1994).
669	[LAC 33:III.5109.A]	Sampling connection systems (closed-purge or closed-vent system): Return the purged process fluid directly to the process line with zero VOTAP emissions to the atmosphere, or collect and recycle the purged process fluid with zero VOTAP emissions to the atmosphere, or be designed and operated to capture and transport all the purged process fluid to a control device that complies with the requirements of Section N, as specified in Subsection G.2 of the Louisiana MACT Determination for Refinery Equipment Leaks (July 26, 1994).
670	[LAC 33:III.5109.A]	Instrument systems and pressure relief devices in liquid service; pumps, valves, connectors, and agitators in heavy liquid service; connectors < 1 inch in inside diameter in gas/vapor or light liquid service: Repair leaks as soon as practicable, but not later than 15 calendar days after a leak is detected, except as provided in Section M, as specified in Subsection K.3 of the Louisiana MACT Determination for Refinery Equipment Leaks (July 26, 1994). Make a first attempt at repair no later than 5 calendar days after each leak is detected.
671	[LAC 33:III.5109.A]	Valves in gas/vapor service and in light liquid service (percent leaking valves >= 4): VOC, Total monitored by the regulation's specified method(s) monthly, as specified in Subsection I.7 of the Louisiana MACT Determination for Refinery Equipment Leaks (July 26, 1994). Monitor using the method specified in Subsection P.2. Monthly monitoring must be initiated within 60 days of the previous monitoring and must continue until the percent of leaking valves is less than 4, at which time monitoring can be performed in accordance with Subsection I.1. Which Months: All Year Statistical Basis: None specified

UNF 0002 GME - GME Facility

672	[LAC 33:III.5109.A]	Attach a weatherproof and readily visible identification, marked with the equipment identification, to leaking equipment, as specified in Subsection Q.2 of the Louisiana MACT Determination for Refinery Equipment Leaks (July 26, 1994).
673	[LAC 33:III.5109.A]	Pumps in light liquid service (dual mechanical seal system): Determine, based on design considerations and operating experience, a criterion that indicates failure of the seal system, the barrier fluid system, or both, as specified in Subparagraph D.4.e.ii of the Louisiana MACT Determination for Refinery Equipment Leaks (July 26, 1994). Comply with this requirement instead of the requirements in Subsection D.1.
674	[LAC 33:III.5109.A]	Valves in gas/vapor service and in light liquid service: Repair leaks as soon as practicable, but no later than 15 calendar days after a leak is detected, except as provided in Section M, as specified in Subsection I.3 and I.4 of the Louisiana MACT Determination for Refinery Equipment Leaks (July 26, 1994). Make a first attempt at repair no later than 5 calendar days after each leak is detected.
675	[LAC 33:III.5109.A]	Valves in gas/vapor service and in light liquid service (difficult-to-monitor): Demonstrate that the valve cannot be monitored without elevating the monitoring personnel more than two meters above a support service, as specified in Subsection I.6.a of the Louisiana MACT Determination for Refinery Equipment Leaks (July 26, 1994). Comply with this requirement instead of the requirements in Subsection I.1.
676	[LAC 33:III.5109.A]	Comply with the test methods and procedures in Section P, as specified in Subsections P.1 through P.5 of the Louisiana MACT Determination for Refinery Equipment Leaks (July 26, 1994).
677	[LAC 33:III.5109.A]	Open-ended valves or lines: Equip with a cap, blind flange, plug, or a second valve that seals the open end at all times except during operations requiring process fluid flow through the open-ended valve or line or during maintenance and repair, as specified in Subsection H.1 of the Louisiana MACT Determination for Refinery Equipment Leaks (July 26, 1994).
678	[LAC 33:III.5109.A]	VOC, Total monitored by technically sound method at the regulation's specified frequency. Monitor equipment that has been physically removed from service, disassembled or dismantled in the next scheduled monitoring period or within 1 year of placing back in service, whichever occurs first, to determine if it is leaking, as specified in Subsection C.5 of the Louisiana MACT Determination for Refinery Equipment Leaks (July 26, 1994). Which Months: All Year Statistical Basis: None specified
679	[LAC 33:III.5109.A]	Pressure relief device in gas/vapor service: VOC, Total monitored by the regulation's specified method(s) within 5 days (calendar) after the pressure release to confirm the condition of no leakage, as indicated by an instrument reading of less than 500 ppm above background, as specified in Section F.2.b of the Louisiana MACT Determination for Refinery Equipment Leaks (July 26, 1994). Monitor using the method specified in Subsection P.3. Which Months: All Year Statistical Basis: None specified
680	[LAC 33:III.5109.A]	Connectors in gas/vapor service and in light liquid service >= one inch in inside diameter size (percent of leaking connectors <= 2): VOC, Total monitored by the regulation's specified method(s) annually, as specified in Subsections O.2 and O.4 of the Louisiana MACT Determination for Refinery Equipment Leaks (July 26, 1994). . Monitoring must be performed in the same calendar quarter as the previous monitoring. Monitor using the method specified in Section P. If an instrument reading >= 1000 ppm is measured, a leak is detected. If a leak is detected, initiate repair provisions specified in Subsection O.9, except as provided in Section M. Which Months: All Year Statistical Basis: None specified

UNF 0002 GME - GME Facility

681	[LAC 33:III.5109.A]	Pumps in light liquid service: Presence of a leak monitored by visual inspection/determination weekly (calendar), as specified in Paragraph D.1.b of the Louisiana MACT Determination for Refinery Equipment Leaks (July 26, 1994). If there are indications of liquids dripping from the pump seal, monitor within 5 days. Which Months: All Year Statistical Basis: None specified
682	[LAC 33:III.5109.A]	Compressors (seal system): VOC, Total monitored by the regulation's specified method(s) quarterly, as specified in Subsection E.1 of the Louisiana MACT Determination for Refinery Equipment Leaks (July 26, 1994). Monitor to detect leaks using the methods specified in Section P. If an instrument reading of 5000 ppm is measured, a leak is detected. If a leak is detected, initiate repair provisions specified in Subsection E.8. Which Months: All Year Statistical Basis: None specified
683	[LAC 33:III.5109.A]	Compressors (no detectable emissions): VOC, Total monitored by the regulation's specified method(s) once initially upon designation, annually, and at other times requested by DEQ, as specified in Paragraph E.10.b of the Louisiana MACT Determination for Refinery Equipment Leaks (July 26, 1994). Comply with this requirement instead of the requirements in Subsections E.2 through E.9. Which Months: All Year Statistical Basis: None specified
684	[LAC 33:III.5109.A]	Valves in gas/vapor service and in light liquid service (unsafe-to-monitor): VOC, Total monitored by the regulation's specified method(s) at the regulation's specified frequency. Maintain a written plan that requires monitoring of the valve as frequently as practicable during safe-to-monitor times, as specified in Subsection I.5.b of the Louisiana MACT Determination for Refinery Equipment Leaks (July 26, 1994). Monitor using the method specified in Subsection P.2. Comply with this requirement instead of the requirements in Subsection I.1. Which Months: All Year Statistical Basis: None specified
685	[LAC 33:III.5109.A]	Surge control vessels and bottoms receivers: Equip each surge control vessel and bottoms receiver that is not routed back to the process with a closed-vent system that routes the organic vapors vented from the vessel back to the process or to a control device that complies with the requirements of Section N or to an alternate method of control which has been approved by DEQ, as specified in Section L of the Louisiana MACT Determination for Refinery Equipment Leaks (July 26, 1994).
686	[LAC 33:III.5109.A]	Connectors in gas/vapor service and in light liquid service >= one inch in inside diameter size (percent of leaking connectors > 2): VOC, Total monitored by the regulation's specified method(s) quarterly until good performance is obtained or until four quarterly monitorings have been performed, as specified in Subsections O.2 and O.5 of the Louisiana MACT Determination for Refinery Equipment Leaks (July 26, 1994). If good performance has not been obtained after four quarters of monitoring, monitor the remaining unchecked connectors within three months of the last quarterly monitoring period, as specified in Subsection O.6 of the Louisiana MACT Determination for Refinery Equipment Leaks (July 26, 1994). If monitoring of the remaining connectors indicates good performance, monitor in accordance with Subsection O.4. If monitoring of the remaining connectors indicates that good performance has not been obtained, monitor in accordance with Subsection O.5. Monitor using the method specified in Section P. If an instrument reading >= 1000 ppm is measured, a leak is detected. If a leak is detected, initiate repair provisions specified in Subsection O.9, except as provided in Section M. Which Months: All Year Statistical Basis: None specified
687	[LAC 33:III.5109.A]	VOC, Total recordkeeping by manual logging at the regulation's specified frequency. Maintain a record of the monitoring in the log required in Subsection Q.5, as specified in Subsection C.5 of the Louisiana MACT Determination for Refinery Equipment Leaks (July 26, 1994).

UNF 0002 GME - GME Facility

688	[LAC 33:III.5109.A]	Pumps in light liquid service (dual mechanical seal system): Operate with the barrier fluid at a pressure that is at all times greater than the pump stuffing box pressure, or equip with a barrier fluid degassing reservoir that is connected by a closed-vent system to a control device that complies with the requirements of Section N, or equip with a system that purges the barrier fluid into a process stream with zero VOTAP emissions to the atmosphere, as specified in Paragraph D.4.a of the Louisiana MACT Determination for Refinery Equipment Leaks (July 26, 1994). Comply with this requirement instead of the requirements in Subsection D.1.
689	[LAC 33:III.5109.A]	Compressors: Ensure that the barrier fluid is not in VOTAP service and, if the compressor is covered by a standard under NSPS, is not in VOC service, as specified in Subsection E.4 of the Louisiana MACT Determination for Refinery Equipment Leaks (July 26, 1994).
690	[LAC 33:III.5109.A]	Pumps in light liquid service: VOC, Total monitored by the regulation's specified method(s) quarterly. Monitor to detect leaks by the methods specified in Subsection P.2, except as provided in Subsections C.4, D.4, D.5 and D.6, as specified in Paragraph D.1.a of the Louisiana MACT Determination for Refinery Equipment Leaks (July 26, 1994). If an instrument reading of 2000 ppm or greater is measured, a leak is detected. If a leak is detected, initiate repair provisions as specified in Subsection D.3. Which Months: All Year Statistical Basis: None specified
691	[LAC 33:III.5109.A]	Pressure relief device in gas/vapor service: After each pressure release, return to a condition of no leakage, as indicated by an instrument reading of less than 500 ppm, as soon as practicable, but no later than five calendar days after each pressure release, except as provided in Section M, as specified in Section F.2.a of the Louisiana MACT Determination for Refinery Equipment Leaks (July 26, 1994).
692	[LAC 33:III.5109.A]	Open-ended valves or lines (equipped with a second valve): Operate in a manner such that the valve on the process fluid end is closed before the second valve is closed, as specified in Subsection H.2 of the Louisiana MACT Determination for Refinery Equipment Leaks (July 26, 1994).
693	[LAC 33:III.5109.A]	Valves in gas/vapor service and in light liquid service (percent leaking valves <= 2 for two consecutive semiannual leak detection periods): VOC, Total monitored by the regulation's specified method(s) annually, as specified in Paragraph J.2.b of the Louisiana MACT Determination for Refinery Equipment Leaks (July 26, 1994). Monitor using the method specified in Section P. If the percentage of valves leaking is greater than 2 for any monitoring period, comply with the requirements as described in Section I, as specified in Paragraph J.2.c of the Louisiana MACT Determination for Refinery Equipment Leaks (July 26, 1994). Optional alternative to quarterly monitoring. Which Months: All Year Statistical Basis: None specified
694	[LAC 33:III.5109.A]	Pumps in light liquid service (dual mechanical seal system): Ensure that the barrier fluid is not in VOTAP service and, if the pump is covered by standards under NSPS, is not in VOC service, as specified in Paragraph D.4.b of the Louisiana MACT Determination for Refinery Equipment Leaks (July 26, 1994). Comply with this requirement instead of the requirements in Subsection D.1.
695	[LAC 33:III.5109.A]	Compressors: Repair leaks as soon as practicable, but not later than 15 calendar days after a leak is detected, except as provided in Section M, as specified in Subsection E.8 of the Louisiana MACT Determination for Refinery Equipment Leaks (July 26, 1994). Make a first attempt at repair no later than 5 calendar days after each leak is detected.

UNF 0002 GME - GME Facility

696	[LAC 33:III.5109.A]	The number of each type of components required to be monitored for each monitoring period under applicable leak detection and repair programs shall be reported to the LDEQ by inclusion with each periodic monitoring report. Fugitive emission piping components may be added to or removed from the permitted units, without triggering the need to apply for a permit modification, provided: A) Changes in components involve routine maintenance or are undertaken to address safety concerns or involve small piping revisions with no associated emissions increases except from the fugitive emission components themselves; B) The changes do not involve any associated increase in the production rate or capacity, or tie in of new or modified process equipment other than the piping components; C) Actual emissions following the changes will not exceed the emission limits contained in this permit; and D) The components are promptly incorporated into any applicable leak detection and repair program.
697	[LAC 33:III.5109.A]	Pumps in light liquid service (dual mechanical seal system): Equipment/operational data monitored by visual inspection/determination daily. Check sensor daily or equip with an audible alarm, as specified in Subparagraph D.4.e.i of the Louisiana MACT Determination for Refinery Equipment Leaks (July 26, 1994). If the sensor indicates failure of the seal system, the barrier fluid system, or both based on the criterion determined in Paragraph D.4.e.ii, a leak is detected. If a leak is detected, initiate repair provisions specified in Paragraphs D.3.a and D.3.b. Comply with this requirement instead of the requirements in Subsection D.1. Which Months: All Year Statistical Basis: None specified
698	[LAC 33:III.5109.A]	Compressors: Equip each barrier fluid system as described in Subsections E.2 through E.4 with a sensor that will detect failure of the seal system, the barrier fluid system, or both, as specified in Subsection E.5 of the Louisiana MACT Determination for Refinery Equipment Leaks (July 26, 1994).
699	[LAC 33:III.5109.A]	Valves in gas/vapor service and in light liquid service (skip period leak detection and repair): Notify DEQ 30 days before implementing any of the alternate provisions of Section J, as specified in Subsection R.4 of the Louisiana MACT Determination for Refinery Equipment Leaks (July 26, 1994).
700	[LAC 33:III.5109.A]	Valves in gas/vapor service and in light liquid service (using skip period leak detection and repair): Notify DEQ at least 30 days before implementing one of the alternate monitoring scenarios in Section J, as specified in Paragraph J.1.b of the Louisiana MACT Determination for Refinery Equipment Leaks (July 26, 1994).
701	[LAC 33:III.5109.A]	Pumps in light liquid service (dual mechanical seal system): Presence of a leak monitored by visual inspection/determination weekly (calendar), as specified in Paragraph D.4.c of the Louisiana MACT Determination for Refinery Equipment Leaks (July 26, 1994). If there are indications of liquids dripping from the pump seal, a leak is detected. If a leak is detected, initiate repair provisions specified in Paragraphs D.3.a and D.3.b. Comply with this requirement instead of the requirements in Subsection D.1. Which Months: All Year Statistical Basis: None specified
702	[LAC 33:III.5109.A]	Valves in gas/vapor service and in light liquid service (difficult-to-monitor): VOC, Total monitored by the regulation's specified method(s) at the regulation's specified frequency. Maintain a written plan that requires monitoring of the valve at least once per calendar year, as specified in Subsection I.6.c of the Louisiana MACT Determination for Refinery Equipment Leaks (July 26, 1994). Monitor using the method specified in Subsection P.2. Comply with this requirement instead of the requirements in Subsection I.1. Which Months: All Year Statistical Basis: None specified

UNF 0002 GME - GME Facility

703	[LAC 33:III.5109.A]	Valves in gas/vapor service and in light liquid service: VOC, Total monitored by the regulation's specified method(s) quarterly, as specified in Subsection I.1 of the Louisiana MACT Determination for Refinery Equipment Leaks (July 26, 1994). Monitor using the method specified in Subsection P.2. If an instrument reading of 1000 ppm or greater is measured, a leak is detected. If a leak is detected, initiate repair provisions specified in Subsection I.3. Which Months: All Year Statistical Basis: None specified
704	[LAC 33:III.5109.A]	Instrument systems and pressure relief devices in liquid service; pumps, valves, connectors, and agitators in heavy liquid service; connectors < 1 inch in inside diameter in gas/vapor or light liquid service: VOC, Total monitored by the regulation's specified method(s) within 5 days of finding evidence of a potential leak by visual, audible, olfactory, or any other detection method, as specified in Subsection K.1 of the Louisiana MACT Determination for Refinery Equipment Leaks (July 26, 1994). Monitor using the method specified in Subsection P.2. If an instrument reading of 2000 ppm or greater for pumps or 1000 ppm or greater for valves, connectors, instrument systems, or pressure relief devices is measured, a leak is detected. If a leak is detected, initiate repair provisions specified in Subsection K.3. Which Months: All Year Statistical Basis: None specified
705	[LAC 33:III.5109.A]	Connectors in gas/vapor service and in light liquid service >= one inch in inside diameter size: VOC, Total monitored by the regulation's specified method(s) once initially, as specified in Subsections O.1 and O.2 of the Louisiana MACT Determination for Refinery Equipment Leaks (July 26, 1994). Monitor using the method specified in Section P. If an instrument reading >= 1000 ppm is measured, a leak is detected. If a leak is detected, initiate repair provisions specified in Subsection O.9, except as provided in Section M. Which Months: All Year Statistical Basis: None specified
706	[LAC 33:III.5109.A]	Compressors: Equip with a seal system that includes a barrier fluid system and that prevents leakage of process fluid to the atmosphere, except as provided for in Subsections C.4, E.9 and E.10, as specified in Subsection E.2 of the Louisiana MACT Determination for Refinery Equipment Leaks (July 26, 1994).
707	[LAC 33:III.5109.A]	Valves in gas/vapor service and in light liquid service (percent leaking valves <= 2 for two consecutive quarterly leak detection periods): VOC, Total monitored by the regulation's specified method(s) semiannually, as specified in Paragraph J.2.a of the Louisiana MACT Determination for Refinery Equipment Leaks (July 26, 1994). Monitor using the method specified in Section P. If the percentage of valves leaking is greater than 2 for any monitoring period, comply with the requirements as described in Section I, as specified in Paragraph J.2.c of the Louisiana MACT Determination for Refinery Equipment Leaks (July 26, 1994). Optional alternative to quarterly monitoring. Which Months: All Year Statistical Basis: None specified
708	[LAC 33:III.5109.A]	Valves in gas/vapor service and in light liquid service (unsafe-to-monitor): Demonstrate that the valve is unsafe to monitor because monitoring personnel would be exposed to an immediate danger as a consequence of complying with Subsection I.1, as specified in Subsection I.5.a of the Louisiana MACT Determination for Refinery Equipment Leaks (July 26, 1994). Comply with this requirement instead of the requirements in Subsection I.1.
709	[LAC 33:III.5109.A]	Compressors: Determine, based on design considerations and operating experience, a criterion that indicates failure of the seal system, the barrier fluid system, or both, as specified in Paragraph E.6.b of the Louisiana MACT Determination for Refinery Equipment Leaks (July 26, 1994).

UNF 0002 GME - GME Facility

710 [LAC 33:III.5109.A]
Submit statement: Due in writing by 90 days after approval of the Compliance Plan/Certificate of Compliance. Submit the information specified in Subsections R.1 and R.3, as specified in Subsections R.1 and R.3 of the Louisiana MACT Determination for Refinery Equipment Leaks (July 26, 1994).

711 [LAC 33:III.5109.A]
Connectors in gas/vapor service and in light liquid service >= one inch in inside diameter size (opened or otherwise had the seal broken): VOC, Total monitored by the regulation's specified method(s) at the regulation's specified frequency. Monitor for leaks after being returned to VOTAP service during the next scheduled monitoring period, as specified in Paragraph O.8 of the Louisiana MACT Determination for Refinery Equipment Leaks (July 26, 1994). Monitor using the method specified in Section P. If the follow-up monitoring detects a leak, initiate repair provisions specified in Subsection O.9, unless it is determined to be unrepairable, in which case it is counted as unrepairable.
Which Months: All Year Statistical Basis: None specified

712 [LAC 33:III.5109.A]
Pumps in light liquid service (dual mechanical seal system): Equip each barrier fluid system with a sensor that will detect failure of the seal system, the barrier fluid system, or both, as specified in Paragraph D.4.c of the Louisiana MACT Determination for Refinery Equipment Leaks (July 26, 1994). Comply with this requirement instead of the requirements in Subsection D.1.

713 [LAC 33:III.5109.A]
Connectors in gas/vapor service and in light liquid service >= one inch in inside diameter size (unsafe-to-monitor): VOC, Total monitored by the regulation's specified method(s) at the regulation's specified frequency. Maintain a written plan that requires monitoring as frequently as practicable during safe to monitor periods, as specified in Subsection O.10.b of the Louisiana MACT Determination for Refinery Equipment Leaks (July 26, 1994). Monitor using the method in Section P. Comply with this requirement instead of the requirements in Subsection O.1.
Which Months: All Year Statistical Basis: None specified

714 [LAC 33:III.5109.A]
Pumps in light liquid service: Equip with a closed-vent system capable of capturing and transporting any leakage from the seal or seals to a control device that complies with the requirements of Section N, as specified in Paragraph D.5 of the Louisiana MACT Determination for Refinery Equipment Leaks (July 26, 1994). Alternative to Subsections D.1 through D.4.

715 [LAC 33:III.5109.A]
Submit report: Due quarterly starting three months after the initial report required in Subsection R.1. Include the information specified in Paragraphs R.2.a through R.2.e, as specified in Subsection R.2 of the Louisiana MACT Determination for Refinery Equipment Leaks (July 26, 1994).

716 [LAC 33:III.5109.A]
Pressure relief device in gas/vapor service: VOC, Total < 500 ppm except during pressure releases, as measured by the method specified in Section P.3, as specified in Subsection F.1 of the Louisiana MACT Determination for Refinery Equipment Leaks (July 26, 1994).
Which Months: All Year Statistical Basis: None specified

717 [LAC 33:III.5109.A]
Compressors (no detectable emissions): Demonstrate that the compressor is operating with no detectable emissions, as indicated by an instrument reading of less than 500 ppm above background, as measured by the method specified in Subsection P.3, as specified in Paragraph E.10.a of the Louisiana MACT Determination for Refinery Equipment Leaks (July 26, 1994). Comply with this requirement instead of the requirements in Subsections E.2 through E.9.

718 [LAC 33:III.5109.A]
Open-ended valves or lines: Monitor and repair in accordance with Section I, as specified in Subsection H.4 of the Louisiana MACT Determination for Refinery Equipment Leaks (July 26, 1994).

719 [LAC 33:III.5109.A]
Pumps in light liquid service: Repair leaks as soon as practicable, but not later than 15 calendar days after a leak is detected, except as provided in Section M, as specified in Subsection D.3 of the Louisiana MACT Determination for Refinery Equipment Leaks (July 26, 1994). Make a first attempt at repair no later than 5 calendar days after each leak is detected.

UNF 0002 GME - GME Facility

720	[LAC 33:III.5109.A]	Compressors: Equip with a closed-vent system capable of capturing and transporting any leakage from the seal to a control device that complies with the requirements of Section N, except as provided for in Subsection E.10, as specified in Paragraph E.9 of the Louisiana MACT Determination for Refinery Equipment Leaks (July 26, 1994). Alternative to Subsections E.1 through E.7.
721	[LAC 33:III.5109.A]	Connectors in gas/vapor service and in light liquid service >= one inch in inside diameter size: Calculate the percent leaking connectors using the equation in Subsection O.12 for use in determining the monitoring frequency, as specified in Subsection O.12 of the Louisiana MACT Determination for Refinery Equipment Leaks (July 26, 1994).
722	[LAC 33:III.5109.A]	Connectors in gas/vapor service and in light liquid service >= one inch in inside diameter size (welded completely around the circumference of the interface or physically removed and the pipe welded together): Equipment/operational data monitored by the regulation's specified method(s) within three months after being welded. Check the integrity of the weld by monitoring according to the procedures in Section P or by testing using x-ray, acoustic monitoring, hydrotesting, or other applicable method, as specified in Subsection O.7 of the Louisiana MACT Determination for Refinery Equipment Leaks (July 26, 1994). Comply with this requirement instead of the requirements in Subsection O. Which Months: All Year Statistical Basis: None specified
723	[LAC 33:III.5109.A]	Repair equipment before the end of the next process unit shutdown, if repair is technically infeasible with a process unit shutdown, as specified in Subsection M.1 of the Louisiana MACT Determination for Refinery Equipment Leaks (July 26, 1994).
724	[LAC 33:III.5109.A]	Connectors in gas/vapor service and in light liquid service >= one inch in inside diameter size: Repair Leaks as soon as practicable, but not later than 15 calendar days after a leak is detected. Make a first attempt at repair no later than 5 calendar days after each leak is detected. If a leak is detected, monitor the for leaks within the first 90 days after its repair, as specified in Subsection O.9 of the Louisiana MACT Determination for Refinery Equipment Leaks (July 26, 1994).
725	[LAC 33:III.5109.B.3]	Achieve compliance with ambient air standards unless it can be demonstrated to the satisfaction of DEQ that compliance with an ambient air standard would be economically infeasible; that emissions could not reasonably be expected to pose a threat to public health or the environment; and that emissions would be controlled to a level that is Maximum Achievable Control Technology.
726	[LAC 33:III.5109.B]	Determine the status of compliance, beyond the property line, with applicable ambient air standards listed in LAC 33:III.5112.Table 51.2.
727	[LAC 33:III.5109.C]	Develop a standard operating procedure (SOP) within 120 days after achieving or demonstrating compliance with the standards specified in LAC 33:III.Chapter 51. Detail in the SOP all operating procedures or parameters established to ensure that compliance with the applicable standards is maintained and address operating procedures for any monitoring system in place, specifying procedures to ensure compliance with LAC 33:III.5113.C.5. Make a written copy of the SOP available on site or at an alternate approved location for inspection by DEQ. Provide a copy of the SOP within 30 days upon request by DEQ.
728	[LAC 33:III.5113.A.1]	Submit notification in writing: Due to SPOC not more than 60 days nor less than 30 days prior to initial start-up. Submit the anticipated date of the initial start-up.
729	[LAC 33:III.5113.A.2]	Submit notification in writing: Due to SPOC within 10 working days after the actual date of initial start-up of the source. Submit the actual date of initial start-up of the source.
730	[LAC 33:III.5113.C.1]	Maintain and operate each monitoring system in a manner consistent with good air pollution control practices for minimizing emissions. Repair or adjust any breakdown or malfunction of the monitoring system as soon as practicable after its occurrence.

UNF 0002 GME - GME Facility

731	[LAC 33:III.5113.C.7]	Maintain records of monitoring data, monitoring system calibration checks, and the occurrence and duration of any period during which the monitoring system is malfunctioning or inoperative. Maintain these records at the source, or at an alternative location approved by DEQ, for a minimum of three years and make available, upon request, for inspection by DEQ.
732	[LAC 33:III.5151.F.1.f]	An individual or company contracted to perform a demolition or renovation activity which disturbs RACM must be recognized by the Licensing Board for Contractors to perform asbestos abatement, and shall meet the requirements of LAC 33:III.5151.F.2 and F.3 for each demolition or renovation activity.
733	[LAC 33:III.535]	Comply with the Part 70 General Conditions as set forth in LAC 33:III.535 and the Louisiana General Conditions as set forth in LAC 33:III.537. [LAC 33:III.535, LAC 33:III.537]
734	[LAC 33:III.5609.A.1.b]	Activate the preplanned abatement strategy listed in LAC 33:III.5611.Table 5 when the administrative authority declares an Air Pollution Alert.
735	[LAC 33:III.5609.A.2.b]	Activate the preplanned strategy listed in LAC 33:III.5611.Table 6 when the administrative authority declares an Air Pollution Warning.
736	[LAC 33:III.5609.A.3.b]	Activate the preplanned abatement strategy listed in LAC 33:III.5611.Table 7 when the administrative authority declares an Air Pollution Emergency.
737	[LAC 33:III.5609.A]	Prepare standby plans for the reduction of emissions during periods of Air Pollution Alert, Air Pollution Warning and Air Pollution Emergency. Design standby plans to reduce or eliminate emissions in accordance with the objectives as set forth in LAC 33:III.5611.Tables 5, 6, and 7.
738	[LAC 33:III.5611.A]	Submit standby plan for the reduction or elimination of emissions during an Air Pollution Alert, Air Pollution Warning, or Air Pollution Emergency: Due within 30 days after requested by the administrative authority.
739	[LAC 33:III.5611.B]	During an Air Pollution Alert, Air Pollution Warning or Air Pollution Emergency, make the standby plan available on the premises to any person authorized by the department to enforce these regulations.
740	[LAC 33:III.5901.A]	Comply with the provisions in 40 CFR 68, except as specified in LAC 33:III.5901.
741	[LAC 33:III.5907]	Identify hazards that may result from accidental releases of the substances listed in 40 CFR 68.130, Table 59.0 of LAC 33:III.5907, or Table 59.1of LAC 33:III.5913 using appropriate hazard assessment techniques, design and maintain a safe facility, and minimize the off-site consequences of accidental releases of such substances that do occur.
742	[LAC 33:III.5911.A]	Submit registration: Due January 31, 1998, or within 60 days after the source becomes subject to LAC 33:III.Chapter 59, whichever is later. Include the information listed in LAC 33:III.5911.B, and submit to the Department of Environmental Quality, Office of Environmental Compliance, Emergency and Radiological Services Division.
743	[LAC 33:III.5911.C]	Submit amended registration: Due to the Office of Environmental Compliance within 60 days after the information in the submitted registration is no longer accurate.
744	[LAC 33:III.905]	Install air pollution control facilities whenever practically, economically, and technologically feasible. When facilities have been installed on a property, use them and diligently maintain them in proper working order whenever any emissions are being made which can be controlled by the facilities, even though the ambient air quality standards in affected areas are not exceeded.
745	[LAC 33:III.913]	Provide necessary sampling ports in stacks or ducts and such other safe and proper sampling and testing facilities, exclusive of instruments and sensing devices as may be necessary for proper determination of emission limits.
746	[LAC 33:III.917.A]	Where, upon written application of the responsible person or persons, the administrative authority finds that by reason of exceptional circumstances strict conformity with any provisions of these regulations would cause undue hardship, would be unreasonable, impractical or not feasible under the circumstances, the administrative authority may permit a variance from these regulations.

UNF 0002 GME - GME Facility

747	[LAC 33:III.917.B]	No variance may permit or authorize the maintenance of a nuisance, or a danger to public health or safety.
748	[LAC 33:III.919.D]	Submit Emission Inventory (EI)/Annual Emissions Statement: Due annually, by the 31st of March for the period January 1 to December 31 of the previous year unless otherwise directed. Submit emission inventory data in the format specified by the Office of Environmental Assessment. Include all data applicable to the emissions source(s), as specified in LAC 33:III.919.A-D.
749	[LAC 33:III.927]	Report the unauthorized discharge of any air pollutant into the atmosphere in accordance with LAC 33:I.Chapter 39, Notification Regulations and Procedures for Unauthorized Discharges. Submit written reports to the department pursuant to LAC 33:I.3925. Submit timely and appropriate follow-up reports detailing methods and procedures to be used to prevent similar atmospheric releases.
750	[LAC 33:III.929.A]	No person or group of persons shall allow particulate matter or gases to become airborne in amounts which cause the ambient air quality standards to be exceeded.

INVENTORIES

AI ID: 3165 - Marathon Petroleum Co LLC - LA Refining Division - Garyville Refinery
Activity Number: PER20090017
Permit Number: 3039-V6
Air - Title V Regular Permit Minor Mod

Group Membership:

ID	Description	Member of Groups
FUG 0074	Unit 259 Fug. - GME Flare System Fugitives	GRP0000000028
FUG 0075	Unit 260 Fug. - GME Wastewater Treatment Plant Train No. 5 Fugitives	GRP0000000028
FUG 0076	Unit 263 Fug. - GME Interconnecting Pipeway Fugitives	GRP0000000028
FUG 0077	Unit 265 Fug. - GME Truck Rack Fugitives	GRP0000000028
FUG 0078	Unit 267 Fug. - GME Blending Facilities Fugitives	GRP0000000028
FUG 0079	Unit 271 Fug. - GME Barge Dock No. 3 Unit Fugitives	GRP0000000028

NOTE: The UNF group relationship is not printed in this table. Every subject item is a member of the UNF group

Annual Maintenance Fee:

Fee Number	Air Contaminant Source	Multiplier	Units Of Measure
0720	0720 Petroleum Refining (Rated Capacity)	1	M bbl/day

SIC Codes:

2911	Petroleum refining	UNF 002

H-116

10-054G

TPOR0149

APPENDIX I

Chain of Custody

METCO Environmental ©

CHAIN OF CUSTODY RECORD

Job No.: 10-054
Job Name: Marathon
Location: Garyville, LA
Unit: U220 Thermal Oxidizer #1

Project Manager: M. Hutcherson
Project Supervisor: L. Nehring

Method: 5

SAMPLE I.D.	DATE	TIME	# OF CONT.	Absorb. Solution	Initial Vol.	SAMPLE ANALYSIS REQUIRED: PART	HCL	CL2	SO2	SO3			Recovered by	REMARKS (Specific Compounds/Methods)
Run 1 FH Acetone	6/4/10	1330	1			✓							L. Nehring	
Run 1 Filter	6/4/10	1325	1			✓							L. Nehring	
RB Acetone		1420	1		200mL	✓							L. Nehring	
Run 2 FH Acetone		1640	1			✓							L. Nehring	
Run 2 Filter		1645	1			✓							L. Nehring	
Run 3 FH Acetone		1820	1			✓							L. Nehring	
Run 3 Filter		1822	1			✓							L. Nehring	

Samples Received for Transport/Shipment by:		Date: 6/4/10	Time: 2100
Samples Received for Transport/Shipment by:		Date: 6/6/10	Time: 1300
Samples Received for Transport/Shipment by:		Date:	Time:
Samples Shipped Via:	Fed-EX	Date: 6/7/10	Time: 1700
Samples Received at Laboratory by:		Date: 6/8/10	Time: 1300
Samples Analyzed by:	M. Banter	Date: 6/11/10	Time: 1330
Samples Analyzed by:		Date:	Time:
Data Checked by:		Date: 06/16/10	Time: 1500

I-2

10-054G

VERSION 2
10 MARCH 2003

APPENDIX J

Resumes of Test Personnel

ROBERT M. PATTERSON; President

Education	B. S. 1983, Central Michigan University; Mt. Pleasant, Michigan, in Geology and Earth Science-Meteorology.
Professional Training Courses	Attended a two-day short course, "Performing and Observing Source Sampling" in Dallas, Texas. Attended a one-day short course on basic supervision. Attended a four-week management course presented by the American Management Association, 1991-1992.
Certification	Certified Visible Emissions Evaluator Certified Cabot Full-Face Respirator Fit Tester
Professional Memberships	Source Evaluation Society American Management Association
Technical Experience	Participated in the sampling of over 1,000 sources, including several of which were sampled simultaneously using more than one sampling train. Thoroughly trained in all EPA testing procedures, 1986-present. Over nineteen years experience with EPA and Texas Air Control Board methods of sampling - both stationary sources and ambient air. CFR, Title 40, Chapter I, Part 60, EPA Methods 1 through 25, and 101 through 110. Performance Specifications 1 through 5. CFR, Title 40, Chapter I, Part 50, Appendix A through F. "Sampling Procedures Manual, Texas Air Control Board, January 1983." Parts 1-1 through 14-6, Appendix B through Appendix M. Experienced with sampling Method 0010, Modified Method 5 Sampling Train; Method 0030, Volatile Organic Sampling Train; and various EPA and "Site Specific" multiple metal and acid gas sampling trains.

(continued)

PATTERSON, Rob (cont'd)

Technical Experience (cont'd)

Over twenty one years experience with EPA and Texas Air Control Board methods of analysis of both stationary and ambient air samples. Particulate matter, SO_3, SO_2, H_2SO_4, NO_x, CO, CO_2, O_2, H_2S, F, TRS, HCl, Cl_2, NH_3, VOC, C_1-C_7, and other organics. Both laboratory and on-site analyses were performed.

Experienced in the sampling and analysis of commercial calibration gas cylinders for sulfur dioxide, oxides of nitrogen, carbon dioxide, oxygen, carbon monoxide, and C_1-C_7 hydrocarbons.

Thoroughly trained in the operation and routine maintenance of the following:

- MSA LIRA Model 202S Infrared Analyzer
- Analytical Instrument Development, Inc. Model 340A Calibration System
- Shimadzu GC-Mini 2 Gas Chromatograph
- Thermo Environmental Model 10AR Oxides of Nitrogen Analyzer
- Thermo Oxygen Analyzer
- Teledyne Model 326 Oxygen Analyzer
- Thermo Environmental Model 48 Carbon Monoxide Analyzer
- Thermo Environmental Model 40 Sulfur Dioxide Analyzer
- Ratfisch Model RS 100 Total Hydrocarbon Analyzer
- Western Research Model 721AT Sulfur Dioxide Analyzer
- Horiba Model PIR 2000 Carbon Dioxide Analyzer
- Ratfisch Model RS 55 Total Hydrocarbon Analyzer
- J.U.M. Model VE-7 Total Hydrocarbon Analyzer

JAMES R. MONFRIES; Senior Quality Assurance Manager

Education	B. S. 1975, University of Texas at Arlington; Arlington, Texas, in Biology with a minor in Chemistry. Graduate work at the University of Texas at Dallas in the Environmental Science Department.
Professional Training Courses	Attended a two-day short course, "Performing and Observing Source Sampling" in Dallas, Texas, July 1976.
Certification	Qualified Individual (Groups I, II, III, and IV) Certified Visible Emissions Evaluator
Professional Memberships	Air and Waste Management Association Source Evaluation Society - Past President
Technical Experience	Participated in the sampling of over 700 sources, serving in the supervisory capacity on over 500 sources. Many of the sources were sampled simultaneously using more than one sampling train at several points in the flue gas stream, 1976-present. Also supervised several ambient air monitoring studies, including a permanent five-station high volume air sampling network in South Texas, a permanent four-station high volume air sampling network in Pennsylvania, and a permanent seven-station sulfur dioxide sampling network in East Texas. Was Quality Assurance Manager for several ambient air monitoring studies; including a four-station high volume air sampling network for TSP and PM10 in Midlothian, Texas; a single-station high volume air sampling network for PM10 in South Texas, a two-station high volume air sampling network for TSP in Wichita Falls, Texas, and a four-station continuous air sampling network for TSP and PM10 in Jewett, Texas using Thermo Andersen FH 62 C14 Beta Gauge Dust Monitors.

(continued)

MONFRIES, James (cont'd)

Thirty years experience with EPA and Texas Commission on Environmental Quality methods of analysis of both source and ambient air samples for particulates, SO_2, SO_3, H_2SO_4, H_2S, HCl, Cl_2, NO_x, Hydrocarbons, and TRS.

Experienced in the analysis of commercial calibration gas cylinders for sulfur dioxide and oxides of nitrogen.

Experienced with VOST and Modified Method 5 Sampling Procedures.

Thoroughly trained in the operation and routine maintenance of the following:

- Lear Siegler, Inc. SM800 Stack Gas Monitor
- Du Pont Model 460/1 Photometric Analyzer System
- Lear Siegler, Inc. SM1000 Ambient SO_2 Monitor
- Calibrated Instruments Ultragas SO_2 Monitor
- Meloy 285E SO_2 Analyzer
- Meloy SA-700 Fluorescent SO_2 Analyzer
- MSA LIRA Model 202S Infrared Analyzer
- Analytical Instrument Development, Inc. Model 340A Calibration System
- Shimadzu GC-Mini 2 Gas Chromatograph
- Thermo Environmental Model 10S NO_x Analyzer
- Thermo Oxygen Analyzer
- Teledyne Model 326 Oxygen Analyzer
- Thermo Environmental Model 48 Carbon Monoxide Analyzer
- Thermo Environmental Model 40 Sulfur Dioxide Analyzer
- Ratfisch Model RS 103 Total Hydrocarbon Analyzer
- Western Research Model 721AT Sulfur Dioxide Analyzer
- Horiba Model PIR 2000 Carbon Dioxide Analyzer
- Ratfisch Model RS 55 Total Hydrocarbon Analyzer
- J.U.M. Model VE-7 Total Hydrocarbon Analyzer
- Thermo Andersen Model FH 62 C14 Dust Monitor

JASON LaCROIX; Baton Rouge, Louisiana Office Manager

Education	B. S. Environmental Management Systems, May 2001; LSU - Baton Rouge, Louisiana.
Certifications	Qualified Individual (Groups I, II, and III) Certified Visible Emissions Evaluator HAZMAT certified Adult CPR certified Standard First Aid certified Trained on Fire Extinguisher Usage, March 2005 Fall Protection Trained by METCO Competent Person
Technical Experience	Participated in the sampling of over 350 sources, including several of which were sampled simultaneously using more than one sampling train. Thoroughly trained in all EPA testing procedures, 2001-present. Experienced with Modified Method 5 Sampling Train (Method 0010). Experienced with VOST sampling procedure (Method 0030). Experienced with calibration techniques for all field-testing equipment. Experienced with various multiple metal and acid gas sampling trains. Has performed on-site SO_2 analysis and H_2S fuel gas analysis. Thoroughly trained in the operation and routine maintenance of the following: • Thermo Environmental Model 10S and 42C Oxides of Nitrogen Analyzers • Teledyne Model 326 Oxygen Analyzer

(continued)

LaCROIX, Jason (cont'd)

Technical Experience (cont'd)

Operation and routine maintenance (cont'd)

- Western Research Model 721 AT Sulfur Dioxide Analyzer.
- Horiba Model PIR 2000 Carbon Dioxide Analyzer
- J.U.M. Model VE-7 Total Hydrocarbon Analyzer
- Thermo Environmental Model 48 Carbon Monoxide Analyzer

PAUL LOGAN NEHRING; Environmental Scientist III

Education

B. S. (Plant Pathology), May 2004; University of Florida, Gainesville, Florida.

Technical Experience

Participated in the sampling of over 100 sources, including several of which were sampled simultaneously using more than one sampling train.

Thoroughly trained in all EPA testing procedures, 2007-present.

SAMUEL A. MORRIS; Environmental Scientist II

Education	B.S. (Biological Sciences) May 2007, Louisiana State University; Baton Rouge, Louisiana.
Technical Experience	Participated in the sampling of over 50 sources, including several of which were sampled simultaneously using more than one sampling train. Thoroughly trained in all EPA testing procedures, 2008-present.

TYLER FREEMAN; Environmental Scientist I

Education

B. S. in Environmental Science, May 2009; Texas Christian University (TCU), Fort Worth, Texas.

Technical Experience

Participated in the sampling of over 25 sources, including several of which were sampled simultaneously using more than one sampling train.

Thoroughly trained in all EPA testing procedures, 2010-present.