Note: This is a reference cited in *AP 42, Compilation of Air Pollutant Emission Factors, Volume I Stationary Point and Area Sources.* AP42 is located on the EPA web site at www.epa.gov/ttn/chief/ap42/

The file name refers to the reference number, the AP42 chapter and section. The file name "ref02_c01s02.pdf" would mean the reference is from AP42 chapter 1 section 2. The reference may be from a previous version of the section and no longer cited. The primary source should always be checked.

RECEIVED
APR 4 1990
AIR QUALITY PLANNING
8.10 BRCH # 10

DIVISION OF ENVIRONMENTAL MANAGEMENT
Air Quality Section

April 3, 1990

M E M O R A N D U M

TO: Mike Aldridge

FROM: Don Wynne
Washington Regional Office

Subject: Compliance Test No. 3 Sulfuric Acid Plant
Texasgulf, Inc.
Aurora, NC, Beaufort County

Attached is a copy of the complaince test conducted at Texasgulf's No. 3 sulfuric acid plant. Please review the data submitted by Texasgulf and submit a copy of your review to the Washington Regional Office.

If you have any questions, please contact me.

Texasgulf Inc.
elf aquitaine group

P.O. Box 48 Aurora, North Carolina 27806

Phosphate Operations
(919) 322-4111

March 19, 1990

RECEIVED
WASHINGTON OFFICE
MAR 26 1990
D. E. M.

Mr. Vic Copelan
Air Quality Section
Division of Environmental Management
N. C. Dept. of EHNR
Post Office Box 1507
Washington, North Carolina 27889

Subject: Compliance Test No. 3 Sulfuric Acid Plant

Dear Vic,

Please find attached, the compliance test report for the subject plant. Compliance testing for sulfuric acid mist and sulfur dioxides was conducted on February 21, 1990. The results of the compliance test indicate the sulfuric acid mist emission rate to be 0.019 lbs./ton of product and the sulfur dioxide emission rate to be 2.98 lbs./ton of product. The results of the compliance test are well within the allowable emission rates for sulfuric acid mist and sulfur dioxides of 0.15 and 4.0 lbs./ton of product, respectively.

If I may provide you with any additional information on this subject please let me know.

Sincerely,

J. Wayne Powell, Supervisor
Environmental Programs

JWP/jc

cc: W. A. Schimming w/Summary
A. J. Kubicek w/Summary
W. K. Thornton w/Summary
00-05-000
12-01-003-111

RECEIVED
WASHINGTON OFFICE

MAR 26 1990

D. E. M.

SOURCE PERFORMANCE TEST

SULFURIC ACID PLANT NUMBER 3

TEXASGULF INC.

AURORA, NORTH CAROLINA

FEBRUARY 21, 1990

PREPARED BY:

JOHN C. CARRERE, JR.

SENIOR ENVIRONMENTAL LAB TECH

REVIEWED BY:

MIKE L. ASBY, SUPERVISOR

ENVIRONMENTAL LABORATORY

REVIEWED BY:

J. WAYNE POWELL, SUPERVISOR

ENVIRONMENTAL PROGRAMS

Executive Summary

On February 21, 1990 sampling and analyses were conducted to determine the Sulfuric Acid Mist and Sulfur Dioxide emissions using EPA approved Method 8: Determination of Sulfuric Acid Mist and Sulfur Dioxide Emissions From Stationary Sources, on Sulfuric Acid Plant Number 3.

Senior Environmental Technicians Phillip Forest and Jimmy Hardy performed the stack sampling. Senior Environmental Technician Ted Davis performed the analyses.

Mr. Don Wynne of the North Carolina Division of Environmental Management was present during testing as an official observer.

The results of these series of tests show the Sulfuric Acid Mist emission rate to be .019 pounds per ton of product. The Sulfur Dioxide emission rate was shown to be 2.98 pounds per ton of product. The allowable emission rates for Sulfuric Acid Mist and Sulfur Dioxides are 0.15 and 4.0 pound per ton of product, respectively. Sulfuric Acid Plant Number 3 is operating within the specifications set forth by the Code of Federal Regulations. A total of 3 stack samples were taken.

Test Summary - Sulfuric Acid Plant Number 3

EPA Method 8 - Source Performance Test 02/21/90

	Run 1	Run 2	Run 3
Stack Volume Flow Rate, SCFM	73,643	73,757	74,111
Sample Volume, DSCF	63.48	47.74	47.96
Production Rate, TPD	1719.0	1718.4	1714.9
H2SO4 Mist mg/DSCF	0.123	0.145	0.142
H2SO4 Mist Emission Rate, #'s/Ton of Product	0.017	0.020	0.020
Stack Test Sulfur Dioxide, % by Volume	0.0295	0.0313	0.0320
Sulfur Dioxide mg/DSCF	20.84	22.11	22.57
Stack Test Lbs SO2/Ton of Product	2.83	3.01	3.10
Isokinetic Rate	98.1	97.8	97.7
Average Lbs of Mist/Ton of Product (3 tests)		0.019	
Average Lbs of SO2/Ton of Product (3 tests)		2.98	

Production Information

Sulfuric Acid Plant No. 3 Method 8 Source Performance Test
02/21/90

	Test 1	Test 2	Test 3
% H_2SO_4	95.13	95.10	94.93
S. G. @ 100 oF	1.8187	1.8186	1.8182
Production Rate T.P.D.	1719.01	1718.37	1714.92

Example Calculation

165.46 gpm x 60 min. x 24 hr. x 8.34 x 0.9513 x 1.8187/2000 = 1719.01 TPD

Sulfuric Acid Plant No. 3

Stack Data Summary

02/21/90

Time	Run #	Velocity FPS	Stack Volume FT^3/Min	Temp (oF)
09:15	1	58.289	73643	149
11:45	2	58.627	73757	152
13:54	3	58.900	74111	152

Note: All results are in dry standard feet.

SO2 AUDIT SAMPLES

Technician Ted Davis

Date Analyzed 02/21/90

Sample #C6005

Titration 1	8.37
Titration 2	8.39
Titration 3	8.40
Average	8.387

637.3 mg/dscm

Sample #A00067

Titration 1	20.21
Titration 2	20.23
Titration 3	20.19
Average	20.210

1535.8 mg/dscm

Lot no. 0589

Sample #XXX

Titration 1	2.60
Titration 2	2.60
Titration 3	2.62
Average	2.607

198.1 mg/dscm

Sample #2317

Titration 1	6.05
Titration 2	6.01
Titration 3	6.06
Average	6.040

459.0 mg/dscm

Sample #3

Titration 1	14.35
Titration 2	14.34
Titration 3	14.35
Average	14.347

1090.2 mg/dscm

Calculations

1) Production Rate Tons/Day = (((((((A-B)xC)/D)xE)xF)xG)/H)

2) Lbs of Mist/Ton of Product = (((IxE)xJ)/K)

3) Lbs of SO2/Ton of Product = ((((LxE)xJ)/K)

4) %SO2 by Volume = L/652.8

Where:
- A = Initial Acid Totalizer Reading
- B = Final Acid Totalizer Reading
- C = Totalizer Factor (1 count = 50 Gallons)
- D = Number of Minutes Between Totalizer Readings
- E = Minutes in 24 hours
- F = Decimal Equivalent of Acid Strength
- G = 8.34 x S.G.
- H = 2000 Lbs./Ton
- I = H2SO4 Mist Lbs./DSCF
- J = Stack Volumetric Flow
- K = Production Rate Tons/Day
- L = SO2 Lbs./DSCF

8.13

R7-101 ~~AAJ~~ JY Does this need a Sample Report Review

RECEIVED

JUN 30 1987

Region 7
Texas Air Control Board

EXXON COMPANY, U.S.A.
POST OFFICE BOX 3950 • BAYTOWN, TEXAS 77522-3950

REFINING DEPARTMENT
BAYTOWN REFINERY

June 26, 1987

C-9163

BRUP PERFORMANCE
TEST RESULTS

File: 87TSD T 117

Mr. Eli Bell
Executive Director
Texas Air Control Board
6330 Highway 290 East
Austin, Texas 78723

Attention: Ms. Karen Neumann

Dear Mr. Bell:

Performance tests on the new Baytown Refinery Upgrade Project (BRUP) Claus Unit installed at Sulfur Conversion Unit 2 were conducted by ATC, Inc., on March 12, 1987. Three copies of the ATC, Inc., report describing the sampling procedures and results of the subsequent analyses are attached.

The table on Page 1-1 of the report compares the actual test results with the maximum allowable standards for H_2S and total reduced sulfur. In each case the actual results are only about 1-2 percent of the allowable level.

If you have any questions about these testing procedures or results, please call me at (713) 425-3702.

Sincerely,

File Number-34

JBM:tlf

c - W/Attachment: Mr. Marty Jones, TACB Re

ATC Project No. 145-02

T-601
TOTAL REDUCED SULFUR EMISSION COMPLIANCE TESTING
EXXON COMPANY U.S.A.
BAYTOWN, TEXAS
MARCH 1987

Prepared For

EXXON COMPANY, U.S.A.
P. O. BOX 3950
BAYTOWN, TEXAS 77520

Joseph P. Duncan

APPROVED FOR TRANSMITTAL
JUNE 1987

Prepared By

ATC, INC.
1635 Pumphrey Avenue
Auburn, AL 36830-4303

TABLE OF CONTENTS

		Page
SECTION 1	INTRODUCTION	1-1
SECTION 2	RESULTS AND DISCUSSION	2-1
SECTION 3	ANALYTICAL METHODOLOGY	3-1
	3.1 Procedures	3-1
	3.2 Quality Control	3-3

LIST OF TABLES

Table		
2.1	Summary of TRS Emissions, T-601	2-1
3.1	Summary of Permeation Device Information	3-5

LIST OF APPENDICES

APPENDIX A TEST PLAN AND PROJECT SUMMARY

APPENDIX B FIELD DATA AND CALCULATIONS

APPENDIX C PROCESS SCHEMATIC

APPENDIX D CALIBRATIONS AND CERTIFICATIONS

APPENDIX E REFERENCE METHOD 15 ANALYTICAL METHODOLOGY

SECTION 1

INTRODUCTION

SECTION 1

INTRODUCTION

ATC, Inc. (ATC) was retained by Exxon Company U.S.A. (Exxon) to conduct reduced sulfur emission testing on Source T-601 of the No. 2 Sulfur Conversion Unit (SCU-2). The purpose of the testing was to demonstrate the unit's ability to comply with the applicable performance standards set by the Texas Air Control Board (TACB).

Testing was conducted on March 12, 1987 using the pre-approved test plan included in Appendix A by an ATC test team comprised of Mr. Walter Blair and Mr. Richard Joye. Mr. Blair served as the ATC Project Manager and Dr. Bruce Ferguson was the ATC Technical Director. Mr. John Corley represented Exxon during the testing. Mr. Marty Jones of TACB was present during testing.

During the testing period, the feed to the SCU 2 claus units contained 453.9 LT/D sulfur. The design capacity of the three claus trains is 408 LT/D each for a total of 1224 LT/D.

During the testing period, the feed to the SCU 2 tail gas treating system contained 27.7 LT/D sulfur. The design capacity of the two hydrogenation trains is 31.6 LT/D each for a total of 63.2 LT/D. The design capacity of the FLEXSORB SE absorber is 60 LT/D.

Source T-601 was found to be in compliance with the EPA New Source Performance Standards as shown below:

	vppm on Dry Oxygen Free Basis	
	Maximum Allowable	Source T-601
H_2S	10	0.07
Total Reduced Sulfur	300	5.32

Section 2 of this report summarizes the results of testing. Section 3 briefly describes the analytical methodology used for the testing. Supporting field data, calculations, a brief project summary, the test plan, and general project information is provided in the appendices.

SECTION 2

RESULTS AND DISCUSSION

SECTION 2

RESULTS AND DISCUSSION

The results of reduced sulfur emission testing on Source T-601 on March 12, 1987 are summarized in Table 2.1. All data has been corrected for recovery of H_2S through the sample system and for zero percent oxygen. Appendix B contains copies of the field data collected during testing. Summary sheets provide the average run concentration and calibration curve values used in the testing. Calibration and system performance data are also included in the Appendix.

TABLE 2.1

SUMMARY OF TRS EMISSIONS, T-601

	RUN 1	RUN 2	RUN 3	MEAN
Date	3-12-87	3-12-87	3-12-87	---
Time Began	0824	1216	1620	---
Time End	1120	1512	1916	---
Stack Gas				
Temperature, ^{o}F	72	72	68	71
Velocity, ft/sec	40	40	38	39
Moisture, %	2.6	2.6	2.3	2.5
Oxygen Concentration, %	0.2	0.2	0.2	0.2
Carbon Dioxide Concentration, %	4.4	4.2	4.2	4.3
Volumetric Flow Rate				
At Stack Conditions x 10^3 ft^3/min	29.8	29.8	28.7	29.4
At Standard Conditions, x 10^3 ft^3/min	29.0	29.0	28.2	28.7
Hydrogen Sulfide				
Concentration, ppm	<0.13	<0.04	<0.03	<0.07
Emission Rate, lb/hr	<0.02	<0.01	<0.01	<0.01
Carbonyl Sulfide				
Concentration, ppm	5.16	5.09	5.38	5.21
Emission Rate, lb/hr	1.40	1.38	1.42	1.40
Carbon Disulfide				
Concentration, ppm	<0.02	<0.02	<0.03	<0.02
Emission Rate, lb/hr	<0.01	<0.01	<0.01	<0.01
TRS				
Concentration, ppm	<5.33	<5.17	<5.47	<5.32
Emission Rate, lb/hr	<1.44	<1.41	<1.45	<1.43

SECTION 3

ANALYTICAL METHODOLOGY

SECTION 3

ANALYTICAL METHODOLOGY

3.1 PROCEDURES

Testing was performed using the EPA Reference Methods identified below.

Parameter	EPA Reference Method
Volumetric Flow	1, 2
Gas Composition (CO_2 and O_2)	3
Moisture	4
Total Reduced Sulfur	15

The most current revision of each method (as described in the Federal Register) was used. The following paragraphs summarize the protocol.

Stack Gas Volumetric Flow

The sampling points were selected in accordance with EPA Reference Method 1 so that a representative sample of stack gas was taken. The traverse points were located in the centers of equal area zones, the number of which was determined by the stack dimensions and the number of duct diameters upstream and downstream from the sampling points to the nearest disturbance.

Source T-601 stack is a circular duct 48 inches in diameter. Each sampling point is approximately nine feet from the nearest upstream disturbance and approximately five feet from the nearest downstream disturbance. Forty-eight traverse points were used; twenty-four located through each of two ports located 90° apart.

The velocity of the gas stream was determined according to EPA Reference Method 2 by reading the instantaneous velocity head with an inclined manometer at each sampling point with a standard pitot tube. The stack pressure was measured with the static side of the pitot tube. A calibrated pyrometer was used to measure stack temperature. The stack was tested for cyclonic flow according to EPA Reference Method 2. The flow was not cyclonic.

Stack Gas Molecular Weight

The carbon dioxide and oxygen concentrations were determined using EPA Reference Method 3. An integrated sample was taken for each run and analyzed with a Fisher brand Orsat with a 50 percent capacity for carbon dioxide and oxygen content. The molecular weight of the gas was calculated using the moisture, oxygen and carbon dioxide content and the measured stack gas temperature. The oxygen content was used to correct the TRS concentrations to 0 percent oxygen.

Moisture Content

The moisture content used for calculating the gas stream flow rate was determined by wet bulb, dry bulb psychometry using calibrated dial thermometers.

Total Reduced Sulfur

The total reduce sulfur (TRS) testing was performed using techniques and procedures described in EPA Method 15. Appendix E provides a detailed description of the methodology, equipment and instrumentation normally used by ATC to conduct TRS testing. That Appendix also includes a discussion of calculation procedures and a demonstration of interference-free analysis of TRS in the presence of carbon dioxide. The following paragraphs provide specific details of the methodology used during this project.

A Teflon-lined, stainless steel probe of sufficient length to monitor the gas stream without wall effects was used to extract a gas sample from the emission source. The probe tip was directed away from stack gas flow to minimize particulate and moisture entrainment. The probe was plumbed directly to the recovery gas line and sample conditioning system.

The sample conditioning system consisted of a pair of Teflon impingers containing 2M citrate buffer, pH 5.4 - 5.8, arranged in series and maintained in an ice bath. Even though the impinger set traps entrained particulate matter; very fine particulate matter was removed by a Balson^R AQ Microfibre filter installed between the impinger outlet and sample line inlet.

An unheated nylon line was plumbed from the impinger outlet to the sample pump inlet. Sample line length and connections were minimized to reduce surface adsorbtion of TRS and the possibility of leaks. Sample flow rates were selected to yield 1-2 sample residence times per injection cycle.

The pump outlet was plumbed directly to a constant pressure bottle. At this point, the bulk of the sample was vented to the atmosphere and the balance was used to charge the GC sample loop. The GC sample loop outlet was plumbed to a Tedlar gas collection bag used for integrated Orsat analysis.

Separation of hydrogen sulfur (H_2S), carbonyl sulfide (COS), and carbon disulfide (CS_2) was accomplished by gas chromatography on a Carbosorb B HT 100 column. The Carbosorb B HT 100 column was backflushed to achieve separation of all three compounds within 15 minutes. The gas chromatograph was operated on a four-minute cycle to give 3.5 injections per hour.

Detection of reduce sulfur compounds was accomplished with a flame photometric detector. The flame photometric detector response was calibrated before and after each three one-hour run. The calibration FPD responses were recorded by an integrator and transferred to source data sheets by the field sampling personnel. Calibration curves were prepared using the log-log linear least square best fit of the data.

Oxygen analyses were performed on the integrated sample collected at the GC sample vent during each sampling run. Analyses were performed with a Fisher brand Orsat (with a 50 percent capacity) using the techniques described in EPA Method 3. Results were used to correct the TRS concentration as specified for each source.

The TRS concentration was corrected to 0 percent oxygen using the formula

$$C_{corr} = C_{meas} \frac{(21 - x)}{(21 - y)}$$

Where

C_{corr} = the concentration corrected for oxygen.
C_{meas} = the concentration uncorrected for oxygen.
x = the volumetric oxygen concentration in percentage to be corrected to (0 percent for sulfur recovery units).
y = the measured average volumetric oxygen concentration.

3.2 QUALITY CONTROL

Throughout the entire project, a high level of quality control was maintained to ensure the accuracy of the data. The test personnel were experienced in the use of the instrumentation, the procedures and the quality control requirements. Resumes of the personnel involved in the project are included in the Test Plan in Appendix A. The following paragraphs briefly summarize the quality control associated with the project.

General

All data were recorded at the time of collection on preprinted data sheets. All samples were prepared for shipment and chain-of-custody was maintained from the sampling technician to the analyst. Calculations were performed (where possible) with preprogrammed calculators. Data transfers were minimized and all calculations were verified by a second person. This report was reviewed and approved by the Project Technical Director prior to transmittal. In general, all accepted quality control and practices recommended by the reference methods were followed.

Stack Gas Volumetric Flow

The stack was measured with a certified tape to an accuracy of 0.1 inch. The velocity and sampling traverse points were marked on the probe with heat resistant glass fiber tape.

The pitot tubes used to measure the velocity pressures were calibrated prior to the test and verified at the completion of the test. The pyrometer used to measure the stack gas temperature were calibrated with respect to standard thermometers prior to the test. At the completion of the test, all equipment was visually inspected and damage was not indicated.

Stack Gas Molecular Weight

Quality control on oxygen analyses by EPA Reference Method 3 involved the analysis of ambient air before and after every sixth sample. If the

measured concentration was less than 20.0 percent, the Orsat chemicals were changed before proceeding. If the measured concentration was greater than 20.0 percent but less than 20.6 percent, the sample data was corrected for the low measurement. If the measured concentration was 20.6 percent or greater, no correction was made.

ATC also participated satisfactorily in the most recent EPA Audit Sample for Reference Method 3. Those data are on file at ATC.

Total Reduced Sulfur

Permeation devices certified by the vendor to an accuracy of ±5 percent were used to calibrate the FPD response. The temperature of the devices was maintained at a constant value (as certified by vendor) to ensure a consistent, accurate permeation rate. The temperature of the permeation chamber was verified at the time of sampling with a NBS traceable mercury in glass thermometer. The temperature of the permeation chamber was 50.0±0.1°C throughout the sampling.

VICI-Metronics, Santa Clara, California supplied the permeation devices used for the testing. The devices were gravimetrically analyzed to determine the emission rate with ±5 percent before shipment. The information regarding the devices used is summarized in Table 3.1. Copies of emission rate certificates are included in Appendix D.

Various concentrations of the permeants were generated by varying the flow of the diluent gas stream over the devices. A calibration curve was constructed of at least three concentrations of each permeant; three successive injections at each concentration yielded peak areas that differed from the mean peak area value by less than five percent.

An audit cylinder of H_2S in nitrogen was used to document the accuracy of the permeation devices. That cylinder is maintained for audit purposes only. The concentration of a 10.4 ppm cylinder was within ±5 percent of the mean measured concentration.

Trace gas recovery was evaluated after every three hours of sampling by injecting 6-10 ppm H_2S at the probe tip and recovering the sample through the sample conditioning and sample transport subsystems. The same gas stream was then introduced directly to the GC sample loop. The ratio of concentrations corresponds to the system correction factor. This factor was then used to adjust all measured reduced sulfur compound concentrations.

All GC data were recorded by the electronic integrator. The GC operator transferred the data (time and peak areas) to preprinted data sheets which become a permanent record of the results of the test. The recorder output and the original field data sheets remain on file at ATC for a period of three years after the completion of the project.

TABLE 3.1

SUMMARY OF PERMEATION DEVICE INFORMATION

Compound	Hydrogen sulfide	Carbonyl sulfide	Carbon disulfide
Device Type	Wafer device	Wafer device	SE tube
Length/Geometry	30 T3 wafer	50F3 wafer	2.0 cm
Part Number	147-533-0110	147-653-7600	117-020-6300
Method of Certification	Gravimetric	Gravimetric	Gravimetric
Date of Certification	11-10-86	11-10-86	11-10-86
Certification Number	86-26033	86-30457	24-30458
Certification Temperature, ^{o}C	50	50	50
Emission Rate, ng/min	1330	830	561

PROJECT SUMMARY

CLIENT Exxon U.S.A. Inc. ATC PROJECT NO. 145-02

LOCATION Baytown, Texas

ATC PROJECT PERSONNEL Wally Blair / Richard Jorge

Client Contact(s) John Corley Tel No. 425-4913

— Tel No. —

Regulatory Personnel Marty Jones

Process Description T-601 located at Sulfur Conversion Unit 2 (SCU2)

Process Vendor(s)

Item	Manufacturer	Rated Capacity

Process Sketch/Flow Diagram

Included in Appendix C

Miscellaneous Information Conducted 3 3-Hr runs for TRS using EPA R.M.-15. Collected volumetric flow data each run for mass emission rate determination

Page ____ of ____ Test Team Leader W. Blair Date 3/12/87

TAR-10-1/85

ATC APPLIED TECHNOLOGY CONSULTANTS

APPENDIX A

TEST PLAN AND PROJECT SUMMARY

ATC Project No. 145-02

TEST PLAN TO CONDUCT REDUCED SULFUR EMISSION TESTING OF A SULFUR RECOVERY UNIT TO DETERMINE COMPLIANCE WITH NSPS

Prepared For

EXXON COMPANY USA
P. O. BOX 3950
BAYTOWN, TX 77520

Joseph R Duncan

APPROVED FOR TRANSMITTAL
FEBRUARY 1987

Prepared By

ATC, INC.
1635 Pumphrey Avenue
Auburn, AL 36830-4303

USE OF THIS REPORT AND
INFORMATION CONTAINED THEREIN

Publicity

This report and the information contained therein is the property of the individual or organization named on the face hereof and may be freely distributed in its present form. We do ask, however, that no advertising or publicity matter, having or containing any reference to ATC, Inc. shall be made use of by anyone, unless and until such matter shall have first been submitted to and received the approval in writing of ATC, Inc. (ATC, Inc. does not usually approve any type of endorsement advertising.)

Limitation of Liability

ATC, Inc. has used its professional experience and best professional efforts in performing this work. However, ATC, Inc. does not represent, warrant, or guarantee that its work or product produced therefrom are merchantable or satisfactory for any particular purpose, and there are no warranties, expressed or implied, to such effect. Acceptance, reliance on, or use of such results shall be at the sole risk of Sponsor. In connection with this work, ATC, Inc. shall in no event be responsible or liable in contract or in tort for any special, indirect incidental or consequential damages such as, but not limited to, loss of product, profits or revenues, damage or loss from operation or nonoperation of plant, or claims of customers of Sponsor.

Report No.: 145-02 Date: February 19, 1987

To: Mr. John Corley

Exxon Company USA

P.O. Box 3950

Baytown, TX 77520

TABLE OF CONTENTS

		Page
	PREFACE	ii
SECTION 1	GENERAL INFORMATION	1-1
	1.1 Introduction	1-1
	1.2 Identification of Emission Sources	1-1
	1.3 Project Schedule	1-2
	1.4 Reporting Procedures	1-3
SECTION 2	ANALYTICAL METHODOLOGY	2-1
	2.1 Reduced Sulfur Testing Procedures	2-1
	2.2 Acid Gas Hydrogen Sulfide Testing Procedures	2-3
	2.3 Sulfur Dioxide Testing Procedures	2-3
	2.4 Carbon Dioxide Testing Procedures	2-3
	2.5 Total Hydrocarbon Testing Procedures	2-3
	2.6 Quality Assurance Procedures	2-3

LIST OF APPENDICES

APPENDIX A REFERENCE METHOD 15 ANALYTICAL METHODOLOGY

APPENDIX B REFERENCE METHOD 6 ANALYTICAL METHODOLOGY

APPENDIX C TUTWEILER PROCEDURE FOR DETERMINING H_2S CONCENTRATION IN ACID GAS

APPENDIX D FIELD AND LABORATORY DATA SHEETS

APPENDIX E TEST PERSONNEL RESUMES

PREFACE

This Plan has been prepared to describe some methods and procedures to be utilized by ATC in the conduct of TRS compliance testing on a Sulfur Recovery Unit. Prior to the conduct of the test, ATC personnel will be available to discuss the contents of this Plan. All valid comments received on the draft Test Plan will be incorporated into a final Test Plan that will be followed by the testing. Any questions or comments regarding this Test Plan should be directed to Mr. Walter Blair, (205) 826-6100.

This Plan is the property of ATC. Because the Plan contains proprietary ideas that may affect our competitiveness, it should be treated in a confidential manner. This Plan has been submitted for the sole purpose of describing test procedures. It should be used as such and should not be distributed to personnel without a "need to know."

SECTION 1

GENERAL INFORMATION

SECTION 1

GENERAL INFORMATION

1.1 INTRODUCTION

Exxon Company USA,(Exxon) retained ATC, Inc. to conduct reduced sulfur emission testing at the Baytown, Texas refinery. The testing will be conducted to demonstrate the ability to comply with New Source Performance Standards (NSPS). This document has been prepared to serve as a guide for that testing.

The purposes of this Plan are (1) to serve as a guide for the ATC project personnel by indicating the procedures to be used for each parameter to be tested, (2) to identify the procedures to be used to the Exxon project personnel, and (3) to serve as a checklist for regulatory personnel to ensure that all items of testing are complete and that all procedures are consistent with the objective and scope of the testing.

A pre-test meeting has been scheduled for March 11, 1987. This Plan represents ATC's concept of the testing and describes the procedures that will be used. The ATC Project Manager (Mr. Walter Blair) will describe and discuss the concepts with the regulatory authority during the pre-test meeting.

Section 1 of this Plan is of a general nature and provides information regarding a description of the source, the project schedule and the reporting procedures. Section 2 identifies and discusses the analytical procedures and quality control used during the testing. Supporting information is included, where applicable, in the appropriate appendices.

1.2 IDENTIFICATION OF EMISSION SOURCES

The sulfur recovery unit (SRU) will be tested in accordance with EPA Method 15 to demonstrate compliance with NSPS. EPA Method 15 TRS compounds are collectively identified as hydrogen sulfide (H_2S), carbonyl sulfide (COS), and carbon disulfide (CS_2). Twelve hours of on-site testing will be required to conduct three three-hour runs on the SRU outlet.

The Flexsorb-SE unit will be tested in accordance with EPA Method 15 for TRS. Four hours of on-site testing will be required to conduct one one-hour run.

Three samples of tail gas will be collected and analyzed in accordance with EPA Method 15 for TRS and EPA Method 6 for sulfur dioxide (SO_2). Five hours of on-site testing will be required to collect and analyze the samples.

Four samples of acid gas will be collected and analyzed for H_2S concentration using the Tutweiler procedure, carbon dioxide (CO_2) concentration using EPA Method 3 after conditioning the gas sample through an acidic cadmium nitrate solution, and total hydrocarbons (THC) using EPA Method 25-A. Six hours of on-site testing will be required to collect and analyze the samples. Analysis of the THC samples will be performed in the ATC laboratory in Auburn, Alabama.

1.3 PROJECT SCHEDULE

The following schedule is proposed with the assumption that external review of this Plan will be completed within the allotted period.

ACTIVITY	LATEST COMPLETION DATE
ATC submit draft Test Plan to Exxon	2/18/87
Exxon complete review of draft Test Plan and submit for regulatory review	2/23/87
Regulatory review of draft Test Plan	3/2/87
Regulatory comments to draft Test Plan received by Exxon	3/2/87
ATC receive regulatory comments to draft Test Plan	3/5/87
ATC submit final Test Plan during pre-test meeting	3/11/87
ATC submit draft report to Exxon for review	3/30/87
Exxon complete review of draft report	4/8/87
ATC complete final report	4/21/87

The detailed test schedule is summarized below.

DATE	ACTIVITY
3/11/87	Arrive on site, attend a pre-test meeting with plant personnel and a representation of TACB. Mobilize lab for TRS testing and prepare equipment for testing (this is a mobilization day and no actual testing is anticipated.
3/12/87	Perform three runs (each three hours duration) in accordance with NSPS requirements on the SRU for TRS.
3/13/87	Perform one one-hour TRS run on the Flexsorb-SE unit. Collect and analyze three samples of tail gas for TRS and SO_2 concentration.
3/14/87	Collect and analyze four samples of acid gas for H_2S, CO_2, and THC concentration. This date can be moved to 3/16/87 in consideration of the weekend if necessary.

1.4 REPORTING PROCEDURES

At the completion of the field testing, ATC will prepare one draft copy of the final report and submit it to Mr. John Corley and Mr. Phil Szota of Exxon for review. The report will include a summary of results, copies of all field data, calculations and a summary of the methods used for the testing. Portions of this Plan will be utilized in the report to describe the testing procedures.

After review by Exxon personnel, all revisions and corrections will be incorporated into the text and data and then five (5) copies of the final report will be prepared and submitted.

Exxon personnel will be responsible for the collection, documentation and certification of all process operating conditions throughout the testing. It will be the responsibility of Exxon personnel to certify that the process and all ancillary equipment operate in the normal manner during the test period. ATC will incorporate all data regarding the operation into the test report if Exxon so desires.

The final report will be prepared in a format acceptable to TACB. The report will include the following information.

Section 1 - Introduction

Background information pertinent to the test to be included in the section includes:

- Company name, address and name of company officials
- Permit number requiring the testing
- Name and address of the testing organization
- Names of persons present during the testing, dates of testing and location of tests
- A brief description of the process being sampled
- Type of pollutants sampled during tests
- Applicable subpart(s), and reference method(s) used from 40 CFR 60 or approved alternate methods
- Explanation of deviation(s) from reference methods, if any, and who approved the deviation

Section 2 - Results and Discussion

This section shall present a summary of the test findings pertinent to the evaluation of the process. The following data will be included:

- A summary of emission rates compared to the applicable performance standards
- The rated, normal, maximum and actual operating levels of the process during the test, and a description of the methods used to determine such operating levels
- Record of process parameters during the test period
- A discussion of all emission test results and explanation for any variable data

Section 3 - Analytical Procedures

This section shall describe the procedures used in the operation of the sampling equipment. The following information will be included:

- A schematic drawing of the sample system with a description of each component
- A brief description of the analytical methods used and the procedures used to recover samples

Appendices

All supporting data to include field data, laboratory data, calculations, and calibration data will be included in appropriate appendices. As a minimum, the following data will be included in the appendices:

- Oxygen analyzer calibration work sheets
- Schematic drawing of a stack being tested showing the nearest flow disturbance, stack exit, and sampling sites; stack cross section with sampling points labeled and dimensions indicated
- Copies of all field data collected on original data forms
- Resumes of all test personnel
- Dynacalibrator temperature certification
- Permeation device certificates

SECTION 2

ANALYTICAL METHODOLOGY

Oxygen analyses will be performed on an integrated sample collected during each sampling run. Analyses will be performed using a Teledyne Analytical Instruments (TAI) oxygen analyzer which utilizes an electrochemical cell which produces a response with respect to the amount of oxygen present in the sample. The measured oxygen concentration will be used to correct the TRS concentration to zero oxygen content.

Gravimetrically certified permeation devices will be used to calibrate the gas chromatograph and the FPD. The temperature of the devices will be maintained at a constant value (specified by the vendor) to ensure a consistent, accurate permeation rate. A Metronics Model 230 Dynacalibrator will be used to maintain the accurate temperature necessary to ensure accurate permeate emission. Various concentration of the permeates will be generated by varying the gas flow across the devices.

A calibration curve will be prepared from at least three concentrations of each permeate. At least three successive injections will be used for each calibration point and the variation of those three injections will produce a calculated concentration which differs from the mean peak value by less than 5 percent. The calibration curve will be constructed using a linear least squares regression which fits the equation $Y=aX^b$. The concentrations calculated from each peak area using the calibration curve will differ from the known concentration by less than 10 percent. This demonstrates the linearity and applicability of each calibration curve.

Before and after each run, a six to ten ppm H_2S in nitrogen stream will be introduced at the probe tip and recovered through the entire sample conditioning and sample transport subsystem. The same concentration gas will be introduced directly to the GC sample loop. The ratio of these concentrations, the system correction factor, corrects for any TRS loss, sample line leakage and moisture in the system. This factor will then be used to adjust the measured reduced sulfur compound concentrations to provide the concentration of each compound on a dry basis. Whichever system correction factor (pre-test or post-test) yields the highest concentrations will be used to correct data for the entire run. In instances where the sample train is not broken, the post-run recovery will serve as the pre-run recovery for the upcoming run.

The sample conditioning and transport subsystem will be leak checked prior to initiation of sampling by capping the probe tip and pulling a vacuum on the entire system. The sample flow rate at the pump outlet will be measured with a soap bubble flow tube. A leak free system will be defined as one having a leak rate of less than two percent of the desired sample flow rate. Because the sampling pump has the maximum vacuum capacity of 9 in. Hg and the normal vacuum in the system is less than 2 in. H_2O, the leak check procedure subjects the system to significantly more rigorous conditions than during normal sampling. The entire system is operated under slight vacuum and any leaks during the run would also be indicated by an increase in oxygen content or a reduction in the recovery of H_2S through the system.

Three runs will be performed during a single day. A calibration curve will be prepared before initiating Run 1 and checked at the end of each run. If the calibration curve is found to drift more than five percent at

SECTION 2

ANALYTICAL METHODOLOGY

2.1 REDUCED SULFUR TESTING PROCEDURES

The total reduced sulfur (TRS) testing will be performed using the techniques and procedures described in EPA Reference Method 15. Appendix A provides a summary description of the methodology, equipment and instrumentation normally used by ATC to conduct TRS testing on sulfur recovery plants. That Appendix also includes a discussion of the calculation procedures and a demonstration of interference-free analysis of TRS in the presence of carbon dioxide. The following paragraphs summarize the methodology to be used during this project.

A Teflon-lined stainless steel probe (of sufficient length to monitor the gas stream without wall effects) will be used to extract the gas samples from the emission source. The probe tip will be directed away from the stack flow to minimize moisture entrainment. The probe will be plumbed directly to the recovery gas line and the sample conditioning system.

The sample conditioning system will consist of a pair of Teflon impingers containing 2 M citrate buffer, pH 5.4-5.8, arranged in series and maintained in an ice bath. This sample conditioning system removes moisture and conditions the gas for transport into the analyzer.

An unheated nylon line will be plumbed from the sample conditioner outlet to the sample pump inlet. Sample line length and connections will be minimized to reduce potential surface adsorption of TRS and the possibility of leaks. The sample flow rate from the source will be maintained at approximately 1.0-1.5 liters per minute. This rate will be sufficient to give a residence time of approximately thirty seconds. The system recoveries will be performed at the sample sampling rate in order to demonstrate the lack of sample line losses during the two-minute residence time.

The sample pump will be plumbed from the sample line directly to a constant pressure bottle. The bulk of the sample will be vented to the atmosphere and only a small amount will be used to charge the gas chromatograph sampling loop.

Separation of hydrogen sulfide, carbonyl sulfide and carbon disulfide will be accomplished by a gas chromatograph on a Carbosorb BHT 100 column. This column will be backflushed during the cycle to achieve separation of all compounds within a six-minute period.

The reduced sulfur compounds will be detected using a flame photometric detector which is specific for sulfur compounds. The detector responses will be recorded by a recording electronic integrator and will be transferred directly to source data sheets by field sampling personnel.

any time, a new calibration curve will be prepared. The calibration curve yielding the highest concentrations of reduced sulfur compounds will be used to calculate the data for the run.

2.2 ACID GAS HYDROGEN SULFIDE TESTING PROCEDURES

The concentration of H_2S in the acid gas will be measured using a modification of the Tutweiler procedure described in Appendix C. Using a 100 mL gas sample, the Tutweiler procedure is capable of analyzing approximately one percent H_2S. Because the H_2S concentration in the acid gas is greater than one percent, the normality of the iodine solution will be increased by about ten fold. The volume of iodine solution will be increased by about ten fold. The volume of iodine solution will be increased accordingly to reach an end point. ATC will conduct the H_2S testing at the inlet using this modified Tutweiler procedure.

2.3 SULFUR DIOXIDE TESTING PROCEDURES

Sulfur dioxide sampling will be performed in accordance with EPA Method 6. Appendix B provides a summary of the methodology, and equipment used by ATC to conduct SO_2 emission testing. A series of five midget impingers will be used to collect the samples. The first impinger will contain isopropanol to remove any sulfur trioxide present in the emission source. The second impinger will be emptied to catch any overflow from the first impinger. The third, fourth, and fifth impingers will contain 15 mL of freshly prepared six percent hydrogen peroxide to absorb sulfur dioxide. A drying tube containing reconstituted silica gel will be placed after the fifth impinger to remove any entrained moisture. The outlet of the silica gel drying tube will be plumbed directly into a calibrated dry gas meter. The sample rate will be maintained at approximately one liter per minute. At the end of a run the contents of the third, fourth, and fifth impinger will be combined and diluted volumetrically. The sulfur dioxide concentration will be determined with an ion specific chromatograph using sulfate salts as calibration standards.

2.4 CARBON DIOXIDE TESTING PROCEDURES

The carbon dioxide concentration will be determined using EPA Reference Method 3. An integrated sample will be taken each run and analyzed with a Fisher brand Orsat with a 50 percent capacity for carbon dioxide. The sample gas will be conditioned through an acidic cadmium nitrate solution. The $Cd(NO_3)_2$ selectively removes ammonia and sulfide. The gas volume will be corrected for the reduction of those compounds.

2.5 TOTAL HYDROCARBON TESTING PROCEDURES

The total hydrocarbon concentration (THC) will be determined using EPA Reference Method 25-A. An integrated sample will be taken each run and analyzed with a flame ionization detector using methane as a calibration standard.

2.6 QUALITY ASSURANCE PROCEDURES

Quality control as specified in the EPA reference methods will be followed. All data will be deemed acceptable based on the results of quality assurance activities on site.

During the conduct of EPA Reference Method 15 for reduced sulfur analysis, normal quality control used for compliance purposes will be followed. The ATC procedures have been demonstrated to be free of interference from moisture, particulate, carbon monoxide, and carbon dioxide. Gravimetrically certified permeation devices will be used to calibrate the GC before and after the three-period of testing. The devices will be housed in the constant temperature bath whose temperature is certified to plus or minus 0.1°C with reference to an NBS traceable standard thermometer. The gas flow across the devices will be measured each time of use with a soap bubble flow tube.

If the loss of H_2S through the system exceeds 20 percent, the data will be invalidated. For system losses of 20 percent or less, the data from the source will be corrected by the recovery factor which yields the highest concentration.

Quality control of the moisture analysis involves the accurate measurement of the gas flow and the accurate determination of the moisture condensed in the sampling train. A calibrated triple-beam balance will be used to measure the weight of each impinger before and after sampling. The measurement will be made to the nearest 0.1 gram in each case. The difference in measurement will be considered to be the moisture collected.

The standard quality control associated with the dry gas meter calibration apply to the sulfur dioxide sampling. To document the validity of the SO_2 analyses, EPA audit samples will be used to document the results. Those audit samples will be analyzed as unknowns at the time of sample analysis. Those data will be reported in the final report.

ATC participates in the most recent EPA audits for SO_2. Those data are on file at ATC.

Quality assurance will be performed in a step-wise fashion. If a problem is indicated before or during the testing, the problem will be isolated and corrected before continuing with the test. In accordance with these procedures, all laboratory analytical work will be completed on site to provide immediate feedback of quality assurance activities.

Quality assurance will be of utmost concern to the sampling technicians throughout the testing. Data transfer and calculation checks will be performed prior to acceptance of the data for publication. All calculations and concentrations will be completed on site by the test personnel for review.

DESCRIPTION OF PROCEDURES
ROUTINELY USED BY ATC, INC. TO
PERFORM REDUCED SULFUR ANALYSES
IN ACCORDANCE WITH
REFERENCE METHOD 15
ANALYTICAL METHODOLOGY

Total reduced sulfur (TRS) testing is performed using the general techniques and procedures described in EPA Method 15. This section describes the instrumentation, equipment and procedures used by ATC to conduct reduced sulfur emission testing in accordance with the guidelines given in the Method. Compounds of interest include hydrogen sulfide (H_2S), carbonyl sulfide (COS) and carbon disulfide (CS_2) from petroleum refinery sources. The equipment and techniques described herein have been evaluated by ATC personnel and have been found acceptable to measure reduced sulfur emissions from regulated sources.

A continuous gas sample is extracted from the emission source; scrubbed through a cold, buffered citrate solution (to remove particulate, moisture and sulfur dioxide); transported to the mobile laboratory through an inert sample line; and analyzed by gas chromatographic separation with flame photometric detection.

EQUIPMENT AND INSTRUMENTATION

As shown in Figure 1, the system consists of a Teflon-lined probe, a cold, liquid scrubber, a nylon sample transfer line, a gas chromatograph, an integrator/chart recorder, a standard gas generator and the associated pumps, valves and gases. This configuration is used regardless of the source tested, but the GC conditions may be changed to achieve the desired separation of compounds.

The Teflon-lined, stainless steel probe (of sufficient length to monitor the gas stream without wall effects) is used to extract a gas sample from the emission source. The probe assembly is configured to allow the introduction of a trace gas (H_2S) at the tip of the probe to evaluate the performance of the entire analytical system, and the tip is directed away from stack gas flow to minimize particulate and moisture entrainment. The probe outlet is plumbed directly to the sample conditioning system.

The sample conditioning system consists of two 250-mL Teflon impingers containing a citrate buffer solution. The Teflon sample line drops directly into the first Teflon impinger which contains approximately a 2 molar solution of potassium citrate at a pH of 5.4 - 5.8. At this pH, SO_2 is selectively removed without affecting the reduced sulfur compounds. The impingers are emersed in an ice bath to reduce the gas temperature to 4 or 5°C, thus condensing the moisture. Particulate matter is also removed by the impingers as the gas is washed with the citrate solution.

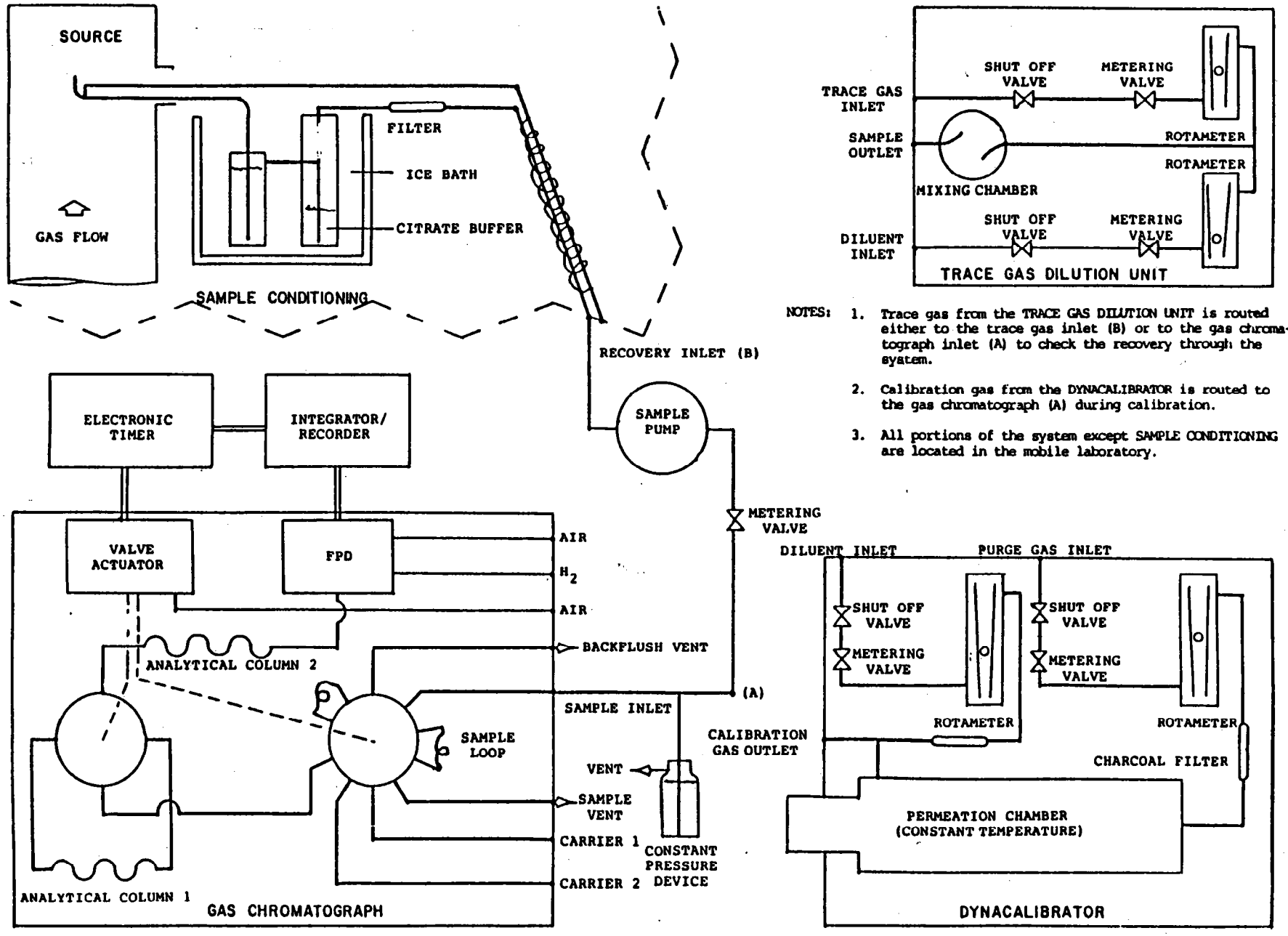

NOTES:

1. Trace gas from the TRACE GAS DILUTION UNIT is routed either to the trace gas inlet (B) or to the gas chromatograph inlet (A) to check the recovery through the system.
2. Calibration gas from the DYNACALIBRATOR is routed to the gas chromatograph (A) during calibration.
3. All portions of the system except SAMPLE CONDITIONING are located in the mobile laboratory.

FIGURE 1 SCHEMATIC DRAWING OF TRS ANALYTICAL SYSTEM

The sample conditioning system (cold, citrate buffer) is located as close to the sample port as practical to remove moisture and particulate from the sample before transport through sample lines to the mobile laboratory. This method of sample conditioning provides better recovery of reduced sulfur compounds than heating the sample and/or diluting with dry air. The citrate buffer solution removes moisture and particulate matter which may absorb H_2S during transport to the GC. By conditioning the sample at the source, loss of reduced sulfur compounds in the sample transport system is minimized.

The conditioning system has been evaluated by ATC personnel and has been found to quantitatively pass all reduced sulfur compounds of concern. Recovery of H_2S through the scrubber is demonstrated before and after each sample run.

The dry (approximately 1 percent moisture) gas is filtered through a microfibre filter before transport to the mobile laboratory through an unheated, nylon sample line. Nylon has been shown to be inert to the reduced sulfur compounds of concern and 200 meters of sample line may be used to transport the sample with greater than 95 percent efficiency.

The sample gas is transported to the mobile laboratory at 1.5 to 2.0 L/min by a diaphragm pump. With a sample line of 170-m x 4-mm ID tubing, the sample residence time is less than two minutes. Forty to sixty mL/min of sample gas are forced through the gas sampling valve and the excess gas is vented through the constant pressure device. The constant pressure device ensures that all samples and calibration gas are analyzed under the same conditions.

The gas chromatograph is a Tracor Model 270HA or a Shimadzu Mini 2 with a flame photometric detector. The carrier gas flow is reversed with the four-port valve during the analysis to achieve separation of all reduced sulfur compounds on the 2-m x 3-mm OD Carbosorb BHT 100 column. Column No. 2 is a 0.6-m x 30-mm OD Teflon tube packed with polyphenyl ether on Teflon beads. The ten-port valve is used to inject the sample from the sample loop. Both valves are solenoid operated and the switching of each is controlled by digital valve interfaces triggered by the electronic timer. A precolumn is not normally required for the separation and a 1.6-mm OD Teflon line is used instead. The sample loop is the length of a 3-mm OD Teflon tube. Varying the length of this tube changes the amount of sample that is analyzed during any injection. Figure 2 shows a typical chromatogram generated by the gas chromatograph.

The peak areas are measured with a Hewlett Packard Model 3390A electronic integrator. The concentration of sulfur in the gas is proportional to the peak areas as well as peak height. A strip chart recording of the peaks is obtained simultaneously on the same instrument.

The gas chromatograph is field calibrated for each of the reduced sulfur compounds of concern. Calibration gas is generated using a VICI-Metronics Model 230 Dynacalibrator. As shown in the schematic drawing of Figure 1, the gas flow through the chamber and the diluent may be varied to produce a 100-fold change in the calibration gas concentrations. Permeation devices for each reduced sulfur compound, purchased from VICI-Metronics, are gravimetrically certified by the vendor to permeate at a known rate ±5 percent.

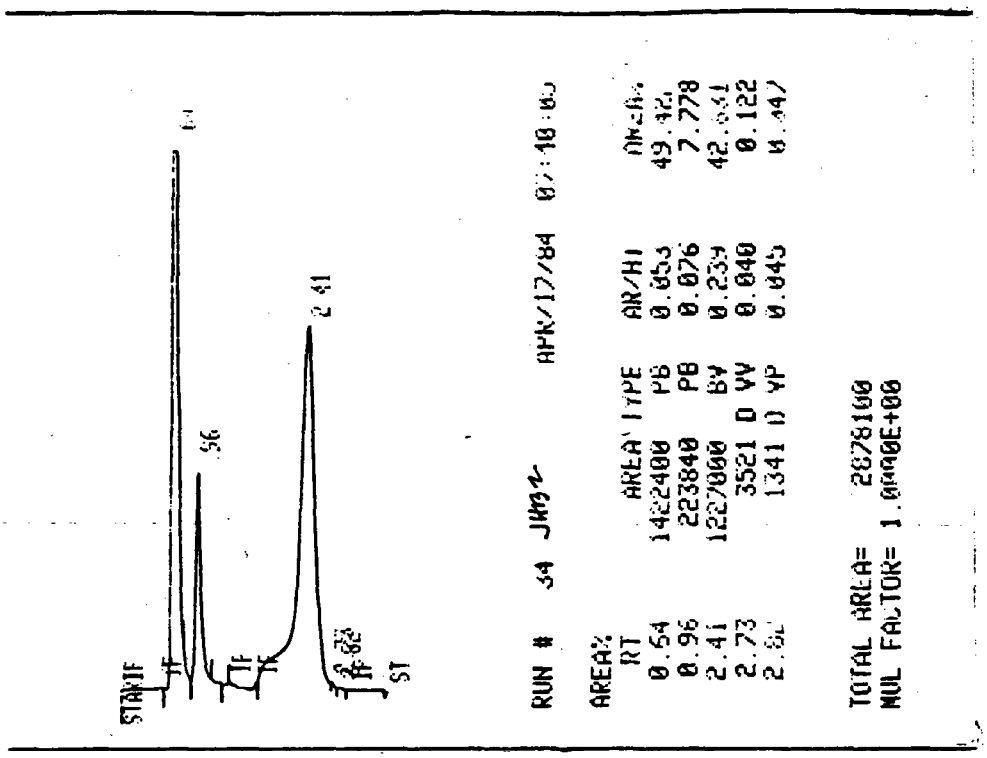

H_2Flow = 50 mL/min

Air Flow = 110 mL/min

$N_2$1 Flow = 25 mL/min

$N_2$2 Flow = 45mL/min

Attenuation = 2^4

Chart Speed = 1 cm/min

Trailer Temp: 20°C

Detector Temp: 120°C

Column Temp: 60°C

Columns: 7' x 1/8" Carbosorb B HT 100
18" x 1/8" Polyphenyl Ether

Event 1: 01 sec, Start, Inject (10-port valve)

Event 2: 90 sec, Load (10-port valve)

Event 3: 90 sec, Reverse Flow (4-port valve)

Event 4: 210 sec, forward flow (4-port valve)

Cycle time: 240 sec

COMPOUND	RETENTION TIME (MIN)	CONCENTRATION (PPM)
H_2S	0.64	21.9
COS	0.96	12.0
CS_2	2.41	7.1

FIGURE 2 TYPICAL CHROMATOGRAM

A known concentration of H_2S to evaluate system performance is generated by diluting 100 ppm H_2S with dry air using matched rotameters. A 5-10 ppm H_2S concentration is introduced at the probe and then at the gas chromatograph to determine the loss of H_2S through the system. Because the trace gas goes through the citrate scrubber, the system recovery also includes moisture correction so that all results are reported on a dry basis.

Oxygen concentration is monitored on a continuous basis at the outlet of the GC vent with a Teledyne Model 320 oxygen analyzer. This measurement is an excellent indicator of leaks.

All rotameters in the system are used to measure consistency of flow and not actually to measure the gas flow. All critical gas flows (Dyna-calibrator, trace gas, etc.) are measured at each time of use with a soap bubble flow tube and a stopwatch. The calibration curves for noncritical rotameters are verified periodically by the soap bubble flow tube method.

METHODOLOGY

Before testing begins, the GC is checked thoroughly for proper operation. A standard gas (a mixture of all reduced sulfur compounds) is injected several times to verify compound retention times and to check the response (peak area) with previously obtained calibration curves.

Before testing on a source actually begins, the sample line is placed in position from the source to the GC set-up and rinsed thoroughly with acetic acid, water and acetone to clean the surface. The sampling system is leak checked by capping the probe and pulling a 10 in. Hg vacuum on the entire system. The sample flow rate at the pump outlet is measured with a soap bubble flow tube. A leak free system is defined as one having a leak rate of less than two percent of the sample flow rate. Because the sampling pump has a maximum vacuum capacity of 10 in. Hg and the normal vacuum in the system is less than 2 in. Hg, the leak check procedure subjects the system to significantly more rigorous conditions than during normal sampling. The entire system simultaneously operated under slight vacuum and any leaks during a run are indicated by an increase in oxygen content and/or a reduction in the recovery of H_2S through the system.

The train is then completely assembled and the probe is inserted into the source. The probe is allowed to reach thermal equilibrium while gas is being pulled through the system. An excess of a known concentration of H_2S is introduced at the probe tip and pulled through the entire analytical system and then injected at the GC to check the recovery through the clean system. After the recovery has stabilized, the standard gas is disconnected from the probe and source gas is collected for a minimum of 15 minutes to ensure the sample line is properly conditioned before TRS concentrations are recorded.

Calibration curves are prepared for each compound before each test begins and verified after each run. Each gas concentration is injected at least three times to ensure instrument stability. The resulting calibration curves are made from the mean response of three injections of at least three different concentrations. All gas flow rates from the dyna-calibrator are measured at the time of use using the soap bubble flow tube technique.

At the end of each sampling run, an H_2S standard is again introduced at the probe to check sample loss in the system. Trace gas recovery is evaluated by injecting 5-10 ppm H_2S gas stream at the probe tip and recovering that sample through the sample conditioning and sample transport subsystems. The same gas stream was then introduced directly to the GC sample loop. The ratio of concentrations (based on calibration curves prepared from certified permeation devices) corrects for TRS loss, sample line leakage and moisture in the system. This factor is then used to adjust all measured reduced sulfur compound concentrations to provide results on a dry basis.

If moisture collection is excessive or if the scrubbing solution appears spent, the citrate buffer in the impingers may be changed. Under normal circumstances, one batch of scrubbing solution is sufficient for three 3-hour runs. Exceptions are noted on the field data sheets.

DATA MANIPULATION AND CALCULATION

Peak areas for the compounds of concern are transcribed from the integrator output to data sheets by the instrument operator. All integrator tapes are filed and the "Source Data" sheet is considered to be the record of the test. The instrument operating conditions, calibration data and recovery data are also transcribed from the integrator tape to the appropriate data sheets.

Data reduction is accomplished by referral to calibration curves generated from the analysis of known concentrations of each compound. Calibration curves fit the general equation of $Y = aX^b$. Coefficients of this equation are determined using a Hewlett Packard 15-C calculator programmed with a linear least squares program to give the best fit of the points. Correlation coefficients (R^2 values) are typically 0.98 or better. Copies of calibration curves used for data calculation are included in the appropriate appendix of the report.

The following information is provided as a guide to the reader to demonstrate the method of calculating TRS concentrations from raw data. The general procedure involves the preparation of a calibration curve for each compound of interest from gravimetrically certified permeation devices and then the calculation of source concentrations using the curve generated. Hypothetical data are included as an example.

The permeant concentration in diluent gas stream is given by the equation:

$$C = \frac{24.04\ P}{MF}$$

Where

C - concentration, ppm
P - device permeation rate, ng/min
F - diluent flow rate, mL/min
M - molecular weight of permeant
24.04 - molar volume at 20°C and 760 mm HG

Example

Given a standard, extended-life H_2S permeation device which permeates at a rate of 2410 ng/min. The diluent flow over the device is 543 mL/min, then

$$C = \frac{24.04 \times 2410}{34.08 \times 543} = 3.13 \text{ ppm}$$

At least three permeant concentrations are used to construct a calibration curve. Each calibration point is considered valid when the mean peak area of three successive injections does not differ by more than five percent from the peak areas contributing to the mean. The slope of the calibration curve is given by the equation:

$$Y = aX^b \text{ or } \log a = b \log X$$

Where
- Y = response for concentration X
- b = slope
- a = constant

In theory, the slope of the calibration curve should be 2.0. Normally calibration curves have slopes between 1.6 and 2.2. Slopes of less than 1.6 may be acceptable if the measured concentrations are clearly within the linear region of the calibration curve. An example calculation is provided in Table 1.

The calibration curve for each compound is checked after each run for drift. If the calculated concentration exceeds the known concentration by more than ten percent, a new calibration curve is constructed. Sample concentrations must be calculated from the curve which yield the greatest concentration values.

The "three successive injections" criterion outlined in the calibration section is also applicable to trace gas recovery. The equation defining trace gas recovery is:

$$\% \text{ Recovery} = \frac{\text{Conc of trace gas recovered through the system}}{\text{Conc of trace gas measured at GC}} \times 100\%$$

The system correction factor is calculated by the following equation:

$$\text{System Correction Factor} = \frac{100}{\% \text{ Recovery}}$$

The concentration of the trace gas recovered through the system should be within 20 percent of the known TRS concentrations. Recovery values of less than 80 percent are normally unacceptable.

All measured concentrations are multiplied by the system correction factor; thus all data is corrected for sample line losses and is expressed on a dry basis.

TABLE 1

EXAMPLE CALCULATION

Calibration Point	1	2	3	4
Known Concentration[a]	10.5	6.41	2.92	1.39
Peak Areas[b]				
1	1.36×10^7	5.08×10^6	1.19×10^6	3.01×10^5
2	1.32×10^7	5.04×10^6	1.17×10^6	3.13×10^5
3	1.33×10^7	5.11×10^6	1.19×10^6	3.08×10^5
Mean Peak Area[b]	1.35×10^7	5.08×10^6	1.18×10^6	3.07×10^5
Difference of Individual Peak Areas From Mean Peak Area				
1	1.5%	0	<1%	2%
2	1.5%	<1%	<1%	2%
3	<1%	<1%	<1%	<1%
Calculated Concentration	10.6	6.33	2.89	1.40
Difference Between Known Concentration and Calculated Concentration	<1%	1.2%	1%	<1%

The slope of this H_2S calibration curve is 1.86

[a] ppm, based on permeation rates and diluent flow

[b] uv-sec

QUALITY ASSURANCE

All GC calibrations are performed using gases generated from certified permeation devices. The emission rate of each permeation device rate is gravimetrically measured to an accuracy of ±5 percent. The emission rate is determined in a constant temperature chamber at a temperature which is traceable to NBS standard. The constant temperature chamber of the ATC Dynacalibrator is certified by the vendor at the same temperature as the permeation device certification. All permeation devices are periodically replaced to ensure that they are used only during the recommended lifetime. The known emission rate coupled with the accurate measurement of the dilution gas flow ensures accurate generation of standard concentrations.

After preparation of a calibration curve from the linear least squares best fit the data, the mean response obtained for each gas concentration is used to calculate the concentration equivalent to the response. The calculated concentration should vary less than 10 percent for the known concentration except at the lower end of the curve. Near the detection limit for each compound, variation may be more due to variation in integration.

The sample system integrity is verified through routine leak checks and determination of the recovery of H_2S through the entire sampling and analysis system. Recovery studies are conducted before and after each 3-hour run to ensure that at least 80 percent of the H_2S introduced at the probe tip is recovered at the GC. All source concentrations are corrected for the lower recovery value.

All rotameters are calibrated with an appropriate soap bubble flowmeter under actual operating conditions. Calibration graphs are prepared for field use. All flows are verified during the testing to ensure that all flows remain constant. The actual, measured flows are used in the calculations.

Pressures and flows are observed continuously and recorded during all testing to ensure uniform operation. Periodic leak checks are performed to ensure system integrity. Any unreasonable results are immediately verified by checking the recovery of a standard gas.

All proceedings are recorded on preprinted data sheets. Daily summaries of the testing are prepared at the end of each day to consolidate the data. The data sheets and all integrator outputs remain on file at ATC for a period of three (3) years after the test.

The gas chromatographic columns and operating conditions are sufficient to obtain separation of all the reduced sulfur compounds. The method has been found to be free of interferences from carbon monoxide, carbon dioxide and hydrocarbons. Sulfur dioxide interference is eliminated by the citrate scrubber at the source. The cold, citrate scrubber eliminates moisture interference by reducing the dew point of the gas to less than $4^{o}C$ and the recovery studies correct the sample concentrations to dry conditions.

The response of a flame photometric detector (FPD)may be affected by methane (CH_4), carbon monoxide (CO) or carbon dioxide (CO_2). Because CH_4 and CO are normally present in emission sources at concentrations less than 200 ppm and because both compounds respond on the analytical GC column in the same way as CO_2, it is not necessary to check for interference from each. It is, however, important to demonstrate that CO_2 does not affect the instrument response to the reduced sulfur compounds because CO_2 is present in many emission sources at high concentrations (up to approximately 20 percent).

The ATC TRS analytical system was evaluated to document the lack of interference by CO_2 and to document the recovery of hydrogen sulfide, carbonyl sulfide, and carbon disulfide through the Teflon impingers containing the citrate buffer solution. The gas chromatograph valving, timing and operation of the system was identical to that described by the

ATC methods. The instrument conditions shown on Figure 3 were used during the experiment, and the chromatogram on that page shows the separation of CO_2 and H_2S.

To document the recovery of H_2S, COS, and CS_2, gravimetrically certified permeation devices were used to generate known concentration standards which were purged through the citrate buffer solution. Samples were analyzed at the inlet and at the outlet of the Teflon impinger containing the citrate buffer.

Three successive injections at the inlet gave the following peak areas (all multiplied by 10^5 uv-sec):

	H_2S	COS	CS_2
Area 1	3.59	3.05	1.69
Area 2	3.46	2.96	1.52
Area 3	3.51	2.90	----
Mean Area	3.52	2.97	1.61
Calculated Slope	1.89	1.94	1.68
Y-intercept	1.55×10^4	1.58×10^4	1.17×10^5
Recovery Gas Concentration, ppm	5.2	4.5	1.2

Three successive injections at the outlet gave the following peak areas (all multiplied by 10^5 uv-sec).

	H_2S	COS	CS_2
Area 1	2.80	2.63	1.37
Area 2	2.78	2.57	1.07
Area 3	2.61	2.41	1.44
Mean Area	2.73	2.54	1.29
Calculated Slope	1.89	1.94	1.68
Y-intercept	1.55×10^4	1.58×10^4	1.17×10^5
Recovery Gas Concentration, ppm	4.6	4.2	1.1

Recoveries for H_2S, COS, and CS_2 were found to be 88, 93 and 92 percent, respectively. H_2S recovery checks are performed before and after each three-hour sample run, and the data is corrected to this recovery factor. It is concluded that because COS and CS_2 recoveries are greater than H_2S recovery no additional correction need be applied to the source data.

Because CO_2 elutes from the column before H_2S, the only reduced sulfur compound that could be affected by CO_2 in the gas is H_2S. To demonstrate a lack of interference, a gravimetrically certified H_2S permeation device was used to generate a known concentration of H_2S in nitrogen and then the same concentration was generated in 16 percent CO_2 and 84 percent nitrogen. Both samples were analyzed repetitively to compare the response of H_2S in the presence of CO_2.

INSTRUMENT DATA

CLIENT ATC, Inc. ATC PROJECT NO. None

SOURCE All reduced sulfur testing DATE 12-22-86

GAS PRESSURE/FLOW		TEMPERATURE	COLUMNS
H_2: 30/30	42 ccm	TRAILER: 76°F	SAMPLE LOOP: 3" unlined
AIR: 20/20	106 ccm	DETECTOR: 115°C	BHT: 1/8" x 6'
N_2-1: 60/30	31 ccm	COLUMN: 70°C	PPE: 1/8" x 16"
N_2-2:			

TIMER PROGRAM

EVENT	1	2	3	4
PROGRAM	1	2	3	4
CIRCUIT	1	2	3	4
ON (min)	0	1	1	5
ON (sec)	03	40	50	30
VARY (min)	6.00	6.00	6.00	6.00
OFF (min)	0	1	1	5
OFF (sec)	05	43	53	32
VARY (min)	6.00	6.00	6.00	6.00

REMARKS

CO_2 and H_2S Separation

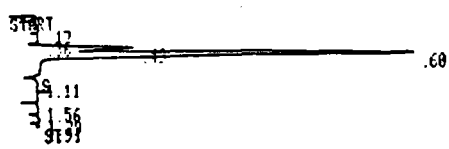

RT	Cmpd
0.49	CO_2
0.60	H_2S

INTEGRATOR PROGRAM

```
LIST: METH @

RUN PRMTRS
ZERO   =  10
ATT 2↑ =  0
CHT SP =  1.0
PK WD  =  0.04
THRSH  =  0
AR REJ =  5000

RPRT OPTNS
  2. RF UNC PKS=      0.0000E+00
  3. MUL FACTOR=      1.0000E+00
  4. PK HEIGHT MODE      NO
  5. EXTEND RT           NO
  6. RPRT UNC PKS        NO

TIME TBL
   0.00 INTG # =  9
   0.50 INTG # = -9
   1.55 INTG # =  9
   2.50 INTG # =  6
   2.70 INTG # = -9
   3.40 INTG # =  6
   4.80 INTG # =  9
   5.60 STOP

CALIB TBL
EMPTY
```

Page ____ of ____

TAR-03-9/84

ATC APPLIED TECHNOLOGY CONSULTANTS

FIGURE 3 INSTRUMENT CONDITIONS USED AND CHROMATOGRAPH OBTAINED DURING INTERFERENCE STUDIES

Five successive injections of 8.15 ppm H_2S in nitrogen gave the following peak areas (all multiplied by 10^5 uv-sec):

2.664	2.627	
2.636	2.617	Mean = 2.616
2.611		Std Dev - 0.021

Five successive injections of 8.15 ppm H_2S in 16 percent CO_2, 84 percent nitrogen gave the following peak areas (all multiplied by 10^5 uv-sec):

2.608	2.611	
2.633	2.601	Mean = 2.616
2.627		Std Dev = 0.013

The 0.57 percent decrease in response (equivalent to 0.3 percent concentration) between the two samples is not significant at the 95 percent confidence level. It is, therefore, concluded that the FPD response to H_2S is unaffected by CO_2 at the concentrations normally measured in emission sources.

APPENDIX D

FIELD AND LABORATORY DATA SHEETS

REDUCED SULFUR FIELD DATA

Client _____ Source _____ Date _____

Cal Curve _____ Inst Data _____ Recovery Data _____ Analyst ____

TIME	H_2S AREA	H_2S CONC (ppm)	COS AREA	COS CONC (ppm)	CS_2 AREA	CS_2 CONC (ppm)			TRS

Page ____ of ____

APPLIED TECHNOLOGY CONSULTANTS

TAR-06-9/84

CLIENT _____ ATC PROJECT NO. _____

SOURCE _____ DATE _____

CALIBRATION SUMMARY

CMPD _____ CURVE NO. _____

TIME	CONC	RESPONSE	CALC CONC	% DIFF

SLOPE _____ Y int _____

CONC @ _____

CMPD _____ CURVE NO. _____

TIME	CONC	RESPONSE	CALC CONC	% DIFF

SLOPE _____ Y int _____

CONC @ _____

CMPD _____ CURVE NO. _____

TIME	CONC	RESPONSE	CALC CONC	% DIFF

SLOPE _____ Y int _____

CONC @ _____

CMPD _____ CURVE NO. _____

TIME	CONC	RESPONSE	CALC CONC	% DIFF

SLOPE _____ Y int _____

CONC @ _____

RUN SUMMARY

RUN NO					
AVG MEAS TRS CONC, ppm					
SYS CORR FACTOR					
CORR TRS CONC, ppm					
OXYGEN CONC, %					
OXYGEN CORR FACTOR					
OXYGEN CORRECTED TRS, ppm					

Page _____ of _____

ATC APPLIED TECHNOLOGY CONSULTANTS

TAR-09-9/84

VELOCITY TRAVERSE DATA

CLIENT _____ PROJECT NO. _____

SOURCE _____ DATE _____

STACK DIMENSION _____ CROSS SECTIONAL AREA _____ BAR. PRESSURE _____

PITOT TUBE ID # _____ AVG COEFFICIENT _____ DATE CAL. _____

SKETCH

RUN NO.			
TIME			
T_s (DB)			
T_s (WB)			
P_s			
O_2 Conc			
CO_2 Conc			
TRAVERSE PT	ΔP	ΔP	ΔP
$\sqrt{\Delta P}$ ave			
MOISTURE			
M_s			
V_s			
Q_A			
Q_s			

P_s

$$V_s = 85.49\ C_p \sqrt{\Delta P}\ \text{ave} \sqrt{\frac{T_s + 460}{M_s\ P_s}}$$

$$Q_A = 60\ V_s\ A_s$$

$$Q_s = Q_A (1-BWS)\ \frac{528}{T_s + 460} \cdot \frac{P_s}{29.92}$$

PUT UNITS IN

Page _____ of _____

TAR-23-1/85

ATC APPLIED TECHNOLOGY CONSULTANTS

CALIBRATION DATA

(Method 15)

CLIENT _____ ATC PROJECT NO. _____

SOURCE _____ DATE _____

COMPOUND	H_2S	COS	CS_2		AMB TEMP
PERMEATION RATE (nL/min)					
TUBE NUMBER					BARO PRESS
RETENTION TIME (min)					

TIME	FLOW (mL/min)	CMPD	KNOWN CONC. (ppm)	AREA (μv-sec)				REMARKS
				1	2	3	AVG.	

Page _____ of _____

APPLIED TECHNOLOGY CONSULTANTS

TAR-02-9/84

RECOVERY DATA

CLIENT _____ ATC PROJECT NO. _____

SOURCE _____ DATE _____

	TRACE	DILUENT	TOTAL	INSTRUMENT DATA
ROT. READING				CALIBRATION NUMBER
FLOW (L/min)				TIME BEGAN/TIME END
CONC (ppm)				PRE/POST RUN NO.

TIME	PEAK AREA	AVE AREA	MEAS CONC	REMARKS/NOTES

	TRACE	DILUENT	TOTAL	INSTRUMENT DATA
ROT. READING				CALIBRATION NUMBER
FLOW (L/min)				TIME BEGAN/TIME END
CONC (ppm)				PRE/POST RUN NO.

TIME	PEAK AREA	AVE AREA	MEAS CONC	REMARKS/NOTES

Page _____ of _____

ATC APPLIED TECHNOLOGY CONSULTANTS

TAR-08-9/84

ORSAT DATA

CLIENT _____ PROJECT NO. _____

SOURCE _____ DATE _____

RUN NO. TIME		TRIAL 1	TRIAL 2	TRIAL 3	TRIAL 4	MEAN
	CO_2					
	TOTAL					
	O_2					
	CO_2					
	TOTAL					
	O_2					
	CO_2					
	TOTAL					
	O_2					
	CO_2					
	TOTAL					
	O_2					
	CO_2					
	TOTAL					
	O_2					
	CO_2					
	TOTAL					
	O_2					
	CO_2					
	TOTAL					
	O_2					

Page _____ of _____

ATC APPLIED TECHNOLOGY CONSULTANTS

TAR-04-9/84

APPENDIX E

TEST PERSONNEL RESUMES

Biographical Data

WALTER SCOTT BLAIR

Environmental Scientist

Education

B.S. in Chemistry and Biology with minor in Mathematics, 1981, Cumberland College, Williamsburg, Kentucky
M.S. in Inorganic Chemistry, 1984, Auburn University
E.P.A. sponsored short courses in air pollution control

Honors, Professional Affiliations, Awards

Magna Cum Laude, Cumberland College, Williamsburg, Kentucky

Experience Record

1981 - 1984 Department of Chemistry, Auburn University, Auburn, AL
1984 - Date ATC, Inc., Auburn, AL

Qualifications for this Project

For approximately two years, Mr. Blair has participated in a variety of research projects for air pollution quantitation and control. During this period he has performed both laboratory assignments and field monitoring tasks. Additionally, he has been involved in developing manuals of standard practice and quality control procedures. Mr. Blair has also prepared reports for complex air pollution projects and has participated in presenting project findings to a variety of industrial clients of ATC.

Mr. Blair has also performed research on LASER induced reactions of highly energetic nitrogen fluorides and sulfur fluorides. He performed IR, MS, GC-MS, NMR (proton, fluorine) and UV-Visible spectroscopy at Auburn University.

Mr. Blair is proficient and directly experienced in a variety of EPA Reference Test Methods including Methods 1-5, 15, 16, 20, 21, 25 and Performance Specifications (PS) 1-5. At ATC he has served as Project Manager and Lead Scientist for air pollution control and hazardous waste projects. He has extensive experience (over two dozen projects) in performance specification testing (PST) of continuous emission monitoring systems (CEMS). His complex emission testing experience includes sulfur recovery plants; intermediate chemicals plants; carbon black manufacturing facilities; co-generation facilities; and kraft pulping operations. He conducts data gathering, analysis and report preparation associated with process/technology evaluation projects. He has participated in numerous tests for volatile and semi-volatile organics emissions from solvent extraction plants, chemical coatings operations, catalytic cracking units, hazardous waste incinerators and coke ovens. Some of his research and testing experience is highlighted below.

- Measured and monitored particle size distribution from five sources to assess engineering option for PM_{10} compliance.
- Performed TRS testing and process evaluation of carbon black plants.
- Conducted relative accuracy testing (RAT) for compliance with EPA Performance Specifications 1-5, involving a variety of CEMS at chemical wood pulping plants throughout the United States.
- Tested and evaluated several incinerators where feedstock included solvents and hazardous wastes.
- Several tests at a synthetic food manufacturing plant for HCl and particulate emissions from hazardous waste incinerator. Also included particle sizing.
- Selected, installed and started-up TRS sampling equipment at a mill.
- Performed VOC testing of bag printing plant. Tested for five solvents at inlet and outlet of incinerator. Determined VOC reduction efficiency. Utilized modified NIOSH methods and EPA Method 25.
- Performed testing of a stationary gas turbine for NO_x and particulate using EPA Methods 1, 2, 3, 4, 5 and 20.
- Inlet and outlet testing to determine particulate removal efficiency of spray dryer baghouse.
- Source VOC characterization of incinerator burning chemical waste residuals.

Biographical Data

BRUCE B. FERGUSON

Executive Vice President

Education

B.S. in Chemistry and Mathematics, 1968, Athens College, Athens, Alabama
M.A. in Physical Chemistry, 1973, Vanderbilt University, Nashville, Tennessee
Ph.D. in Physical Chemistry, 1974, Vanderbilt University, Nashville, Tennessee
Comprehensive Review of Industrial Hygiene, 1985, Rocky Mountain Center for Industrial Hygiene and Occupational Safety
Supervision of Asbestos Abatement Contracts, 1985, Georgia Institute of Technology

Professional Affiliations, Honors and Awards

Certified Industrial Hygienist, ABIH
American Chemical Society
Air Pollution Control Association
Official Association of Analytical Chemists
Technical Association of the Pulp and Paper Industry
American Petroleum Institute
Woodrow Wilson Fellow (1968)
National Science Foundation Fellow (1971-1972)
Magna Cum Laude, Athens College, Athens, Alabama (1968)

Experience Record

1972 - 1973 College Grove Smelter, College Grove, TN
1974 - 1977 PBR Electronics, Athens, AL
1977 - 1983 Harmon Engineering & Testing, Auburn, AL
1983 - Date ATC, Inc., Auburn, AL

Qualifications and Experience

Dr. Ferguson serves as Executive Vice President and Technical Director of ATC. As a Principal Industrial Hygienist, his 14 years of experience includes a distinguished record of research and development work in air pollution and industrial hygiene monitoring methods. He has demonstrated his ability to manage multi-discipline, multi-year projects, direct technical personnel to develop and apply new innovative technology and to communicate results and findings in a clear, concise manner.

He has served as Project Manager of a $517,000, three-year NASA Contract involving particle sampling and counting in Class 100 and Class 100,000 Clean Rooms, compressed air, and commercial-grade breathing air containers used in the space program. Particulate numeration techniques included electronic methods, phase contrast microscopy (PCM), and bright field microscopy. Recently, Dr. Ferguson directed all of the asbestos microscopy work, metal analyses and solvent analyses which resulted in a commercial laboratory's obtaining its American Industrial Hygiene Association (AIHA) accreditation. Dr. Ferguson has directed numerous survey projects regarding personal exposure to asbestos, formaldehyde and other indoor air pollutants. He has served as Project Manager for over $3,000,000 worth of air monitoring projects involving asbestos, formaldehyde, arsenic, lead, sulfur, volatile organics and other toxic and hazardous compounds.

Dr. Ferguson has directed over 800 tests for hydrocarbon and sulfur species emissions from petroleum refineries, kraft pulp mills and steel mills; over 250 tests of VOC emissions; over 50 ambient monitoring projects at refineries, foundries, pharmaceutical plants, magnetic tape coating plants and high-density urban areas; over 400 tests utilizing standard EPA reference methods for particulate, NO_x, SO_2, etc. He has presented professional papers and conducted short courses on continuous emission monitoring, TRS emissions, fuel alcohol distillation and analytical chemistry.

Before forming ATC, Dr. Ferguson served as Vice President of Environmental Services at a major environmental monitoring and engineering firm. There he was responsible for all industrial hygiene and environmental laboratories, air pollution testing projects, biological and chemical environmental studies, contamination investigations, and methods development projects. He managed several R&D contracts with the EPA requiring laboratory and field validation of standard test methods such as EPA Methods 15 and 16. He managed, supervised or performed source emission tests and ambient monitoring of TRS compounds, VOC, hydrocarbon and other hazardous emissions in 40 states and Puerto Rico, covering 300 industrial sources.

Specific experience in the key areas of expertise for a manager is summarized in the following paragraphs. Experience obtained during the past eleven years has been combined by category.

Project Management experience is demonstrated by previous performance on multi-year, multi-discipline contracts with government and industry.

- As Principal Scientist for two EPA contracts (No. 68-02-3215 and No. 68-02-3405) he directed laboratory and field evaluations of EPA Reference Methods 15 and 16. Other tasks under these contracts involved evaluation of long-term process rate monitors; review and editing of QA procedures for EPA Reference Methods 13A and 13B; long-term laboratory and field evaluation of CO and H_2S CEM'S; and report review.

- As Project Manager for a 3-year NASA contract, he directed the efforts of seven full time people to monitor contamination of controlled environments, compressed gases, fuel, life support gases, source emissions, wastewater, plating solutions and rocket booster propellants. As Senior Scientist on the project, he developed a technique to trap and analyze hydrocarbons from contaminated areas in the sub ppb range.

- As a project manager for more than 300 industrial source emission projects, he demonstrated his ability to concurrently manage a variety of projects and complete each in a technically adequate manner, on time and within budget. The successful completion of this large number of projects demonstrates his ability to manage people and also to please many clients.

- As a project manager for more than 200 laboratory projects, he directed efforts for the analysis of industrial hygiene samples, wastewater samples, hazardous waste samples and a variety of environmental samples.

Technical Director experience includes field and laboratory research projects involving characterization of toxic and hazardous materials, metal dusts, organic compounds and other environmental pollutants. He has direct experience in developing and implementing analytical/sampling methods for air emissions, sea water, landfill leachate and other media. Specific project experience includes:

- Methods development research for sampling and analysis of POHC's from hazardous waste incinerators.

- Development and implementation of a plan for complex testing of hydrocarbon species at a petroleum refinery.

- Instrumentation experience with GC/ECD/FPD and capillary column; GC-MS and MS.

- Design and development of a semi-portable GC-MS system for analyzing hydrocarbon contamination in NASA's liquid oxygen and liquid nitrogen systems.

- Directed a study of land application of industrial sludges for Amoco Chemicals.

- Performed treatability studies for several metal plating plants, pesticide manufacturers, mining companies, and inorganic chemicals plants.

- Developed a method for analyzing volatile condensible hydrocarbons.

- Developed methods for micro analysis of seawater for DOE.

- As Director of Research at PBR Electronics, Dr. Ferguson developed analytical instrumentation and methods for NASA; monitored worker exposure to solvents, chlorinated hydrocarbons, and metals. He analyzed breathing air samples weekly for contamination using mass spectrometry. He was responsible for direction of research effort including computer interface projects, treatment of plating solution wastes, analysis of human hair for metals, and development of contamination monitoring techniques.

Communication skills are demonstrated by the fact that Dr. Ferguson has been an invited speaker during the past five years at numerous conferences dealing with quality assurance and performance auditing of CEMS. He has acquired a reputation based on experience in developing comprehensive test plans and analytical protocols; performing systematic site planning; performing both field and laboratory work subject to rigorous written QA/QC procedures; and preparation of state-of-the-art, easily understood reports of technical finding. Specific demonstratable skills include:

- Presentation of more than 15 technical papers at professional conferences and seminars.

- Principal speaker for a two-day seminar to the kraft pulping industry on the analysis of reduced sulfur compounds by EPA Method 16.

- Publication of 12 technical papers and articles.
- Principal author of more than 200 industrial test reports.
- Principal author/reviewer for more than 30 major government reports.
- Principal author for four (4) EPA reference methods in the Federal Register format.

Pertinent Presentations & Publications

"Surface Chemistry and Trace Analysis for Environmental Chemistry." Ph.D. Thesis, Vanderbilt University, 1974.

"DDT Levels in Milk from Indigent Blacks," American Journal of Children's Diseases, 130, 400, 1976.

"Determinations of Nicotine in Human Milk," American Journal of Children's Diseases, 130, 837, 1976.

Reece, J. W., A. R. Barbin, J. D. Sterrett and B. B. Ferguson. "Cyclonic Flow in a Venturi." The 2nd Symposium on Flow: Its Measurement and Control in Science and Industry. St. Louis, MO, March 1981. Sponsored by ASME and ISA.

Ferguson, B. B., J. W. Reece and J. D. Sterrett. "Particulate Sampling in a Cyclonic Flow." The 74th Annual Meeting of the Air Pollution Control Association. Philadelphia, PA, 1981.

Reece, J. W., J. D. Sterrett, and B. B. Ferguson. "Straightening Swirling Flows." Joint ASME/ASCE Mechanics Conference, Boulder, CO, 1981.

Lester, R. E., B. B. Ferguson and W. J. Mitchell. "Field Evaluation of H_2S and CO Continous Emission Monitors at an Oil Refinery." Continuous Emission Monitor Specialty Conference of the Air Pollution Control Association. Denver, CO, 1981.

"Role of Analytical Laboratory in Hazardous Waste Management" presented at the Second Ohio Environmental Engineering Conference, March 1982.

Ferguson, B. B. and G. R. Harmon. "Potential Methanol Recovery from Kraft Pulp Mill Waste." Water and Wastewater Equipment Manufacturers Association Conference, Houston, TX, 1982.

Elam, D. E. and B. B. Ferguson. "Quality Assurance Requirements of Total Reduced Sulfur Emission Testing." Speciality Conference on Measurement and Monitoring of Non-Criteria (Toxic) Contaminants in Air. Air Pollution Control Association, Chicago, IL, 1983

Elam, D. E. and B. B. Ferguson. "Quality Assurance Aspects of Total Reduced Sulfur Continuous Emission Monitoring Systems." Continuous Emission Monitor Speciality Conference of the Air Pollution Control Association. Baltimore, MD, 1985.

Ferguson, B. B. "TRS Continous Emission Monitoring in the Pulp and Paper Industry - One Year Later." Engineering Foundation Conference on Source Testing. Santa Barbara, CA, 1985.

Margeson, J. H., J. E. Knoll, M. R. Midgett, B. B. Ferguson, and P. J. Schworer. "A Manual Method for Measurement of Reduced Sulfur Compounds." Journal of the Air Pollution Control Association, 35(12), 1280, 1985

7. Brief Resume of Key Persons, Specialists, and Individual Consultants Anticipated for this Project

a. Name & Title: Joseph R. Duncan,
Manager Air Quality Division

b. Project Assignment: Project Manager

c. Name of Firm with which associated: ATC, Inc.

d. Years Experience: **With This Firm** 1 **With Other Firms** 19

e. Education: Degree(s)/Year/Specialization
B.S. 1966 Civil Engineering
M.S. 1969 Civil Engineering
M.S. 1974 Environmental Engineering

f. Active Registration: Year First Registered/Discipline 1973 Registered Engineer

g. Other Experience and Qualifications Relevant to the Proposed Project:

Mr. Duncan has served as Project Manager for numerous air pollution control projects in the industrial and governmental sector. These projects have involved engineering process design of air pollution control; flue gas desulfurization; emission inventories; and source testing. Other projects include evaluation of scrubber systems for removal of sulfur oxides; evaluation of municipal incinerators; evaluation of boilers at kraft pulping operations; and assessing impacts of new industrial projects. He has also been involved in design of fugitive gas collection systems and industrial ventilation systems.

He has worked for the Tennessee Valley Authority as a Project Manager in the Air Resources Program. His experience also includes work as an Environmental Engineer in the Knox County Department of Air Pollution Control and Metropolitan Nashville Health Department.

Mr. Duncan's diverse experience also includes work as a process design engineer for industrial waste treatment. He has also worked as a Project Engineer for areawide wastewater treatment facilities and for treatment of non-point source of water pollution.

Mr. Duncan has managed an EPA Collaborative Study of air pollution test methods. He is widely recognized for his leadership and contribution in the field of air pollution control and has served as chairman of several technical committees under the aegis of such organizations as Air Pollution Control Association; Technical Association of Pulp and Paper Industries; American Society of Heating, Refrigeration and Air Conditioning; and American Society of Civil Engineers.

Mr. Duncan is the author of two books in the field of industrial air pollution control technology and has also written several papers and publications in the field.

VELOCITY TRAVERSE DATA

CLIENT EXXON / BAYTOWN PROJECT NO. 145-02

SOURCE T-601 DATE 3/12/87

STACK DIMENSION 48 CROSS SECTIONAL AREA 12.56 BAR. PRESSURE 30.10

PITOT TUBE ID # Std. pitot tube AVG COEFFICIENT 1.000 DATE CAL. —

SKETCH

RUN NO.	1	1	1
TIME	0945		
T_s (DB)	72°		
T_s (WB)	72°		
P_s	-0.50	30.09634	
O_2 Conc	0.2		
CO_2 Conc	4.4		
TRAVERSE PT	ΔP	ΔP	ΔP
1/17/33	.24	.40	0.25
2/18/34	.27	.40	0.26
3/19/35	.30	.35	0.25
4/20/36	.30	.30	0.22
5/21/37	.35	.30	0.25
6/22/38	.40	.32	0.25
7/23/39	.40	.40	0.28
8/24/40	.40	.40	0.40
9/25/41	.43	0.25	0.50
10/26/42	.43	0.25	0.50
11/27/43	.45	0.22	0.50
12/28/44	.45	0.22	0.55
13/29/45	.47	0.23	0.55
14/30/46	.45	0.24	0.50
15/31/47	.45	0.25	0.50
16/32/48	.43	0.25	0.50
ΔP static	-0.50		
$\sqrt{\Delta P}$ ave	0.59		
MOISTURE	0.026		
M_s	28.7		
V_s	39.6		
Q_A	29,840		
Q_s	29,020		

$$V_s = 85.49\, C_p \sqrt{\Delta P}\ \text{ave} \sqrt{\frac{T_s}{M_s\, P_s}}$$

532

$A_s = \pi r^2 = 12.56$

$Q_A = 60\, V_s\, A_s$

$$Q_s = Q_A (1\text{-BWS})\, \frac{528}{T_s} \cdot \frac{P_s}{29.92}$$

Page _____ of _____

TAR-23-1/85

APPLIED TECHNOLOGY CONSULTANTS

CLIENT Exxon USA ATC PROJECT NO. 145-02

SOURCE T-601 DATE 3-12-87

CALIBRATION SUMMARY

CMPD H_2S CURVE NO. 1

TIME	CONC	RESPONSE	CALC CONC	% DIFF
0716	9.24	2.35×10^7	9.26	0
0736	6.10	1.03×10^7	5.82	-5
0808	3.23	3.38×10^6	3.11	-4
1148	4.49	7.54×10^6	4.88	+9

SLOPE 1.78 Y int 4.52×10^5

CONC @ 5000 = 0.08

CMPD COS CURVE NO. 1

TIME	CONC	RESPONSE	CALC CONC	% DIFF
0716	3.26	2.55×10^6	3.00	-8
0736	2.15	1.23×10^6	1.96	-9
1136	4.47	5.85×10^6	4.86	+9
1148	1.58	9.86×10^5	1.73	+9

SLOPE 1.72 Y int 3.85×10^5

CONC @ 5000 = 0.08

CMPD CS_2 CURVE NO. 1

TIME	CONC	RESPONSE	CALC CONC	% DIFF
0736	1.15	7.41×10^5	1.04	-10
0808	0.61	3.51×10^5	0.55	-10
1148	0.84	7.23×10^5	1.02	+21

SLOPE 1.18 Y int 7.07×10^5

CONC @ 5000 = 0.02 (7.06)

CMPD _____ CURVE NO. _____

TIME	CONC	RESPONSE	CALC CONC	% DIFF

SLOPE _____ Y int _____

CONC @ _____

RUN SUMMARY

1

RUN NO	H_2S	COS	CS_2		
AVG MEAS TRS CONC, ppm	<0.12	4.58	<0.02		
SYS CORR FACTOR	0.897	0.897	0.897		
CORR TRS CONC, ppm	<0.13	5.11	<0.02		
OXYGEN CONC, %	0.2	0.2	0.2		
OXYGEN CORR FACTOR	1.01	1.01	1.01		
OXYGEN CORRECTED TRS, ppm	<0.13	5.16	<0.02		

Page _____ of _____

ATC APPLIED TECHNOLOGY CONSULTANTS

TAR-09-9/84

REDUCED SULFUR FIELD DATA

Client Exxon U.S.A. Source T-601 Date 3-12-87

Cal Curve 1 Inst Data 1 Recovery Data 1 Analyst WB

TIME	H_2S AREA	H_2S CONC (ppm)	COS AREA	COS CONC (ppm)	CS_2 AREA	CS_2 CONC (ppm)			TRS
1028	ND	<0.1	5.12×10^6	4.50	ND	<0.02			
1032	ND		5.31×10^6	4.60	ND				
1036	ND		5.41×10^6	4.65	ND				
1040	ND		5.44×10^6	4.66	ND				
1044	ND		5.08×10^6	4.48	ND				
1048	ND		5.36×10^6	4.62	ND				
1052	ND		5.24×10^6	4.56	ND				
1056	ND		4.94×10^6	4.41	ND				
1100	ND		4.99×10^6	4.43	ND				
1104	ND		5.16×10^6	4.52	ND				
1108	ND		5.40×10^6	4.64	ND				
1112	ND		5.53×10^6	4.71	ND				
1116	ND		5.30×10^6	4.59	ND				
1120	ND		5.19×10^6	4.54	ND				
	Average	<0.12		4.58		<0.02			

Page of

TAR-06-9/84

APPLIED TECHNOLOGY CONSULTANTS

REDUCED SULFUR FIELD DATA

Client Exxon U.S.A. Source T-601 Date 3-12-87

Cal Curve 1 Inst Data 1 Recovery Data 1 Analyst WB

TIME	H_2S AREA	H_2S CONC (ppm)	COS AREA	COS CONC (ppm)	CS_2 AREA	CS_2 CONC (ppm)				TRS
0824	1.99×10^5	0.63	5.82×10^6	4.85	ND	<0.02				
0828	70657	0.35	5.09×10^6	4.49	ND	<0.02				
0832	21526	0.18	5.12×10^6	4.50	ND	<0.02				
0836	17053	0.16	5.62×10^6	4.75	ND					
0840	11628	0.13	6.05×10^6	4.96	ND					
0844	ND	<0.1	5.88×10^6	4.88	ND					
0848	11045	0.12	5.30×10^6	4.59	ND					
0852	11394	0.13	5.54×10^6	4.71	ND					
0856	ND	<0.1	5.48×10^6	4.68	ND					
0900	ND	<0.1	5.46×10^6	4.67	ND					
0904	ND		5.43×10^6	4.66	ND					
0908	ND		5.20×10^6	4.54	ND					
0912	ND		5.68×10^6	4.78	ND					
0916	ND		5.79×10^6	4.84	ND					
0920	ND		5.06×10^6	4.47	ND					
0924	ND		5.11×10^6	4.50	ND					
0928	ND		4.94×10^6	4.41	ND					
0932	ND		5.02×10^6	4.45	ND					
0936	ND		5.04×10^6	4.46	ND					
0940	ND		5.02×10^6	4.45	ND					
0944	ND		5.02×10^6	4.45	ND					
0948	ND		4.96×10^6	4.42	ND					
0952	ND		4.67×10^6	4.27	ND					
0956	ND		4.83×10^6	4.35	ND					
1000	ND		5.13×10^6	4.51	ND					
1004	ND		5.13×10^6	4.51	ND					
1008	ND		5.07×10^6	4.48	ND					
1012	ND		5.66×10^6	4.77	ND					
1016	ND		5.63×10^6	4.76	ND					
1020	ND		5.19×10^6	4.54	ND					
1024	ND		5.04×10^6	4.46	ND					

Page of

ATC APPLIED TECHNOLOGY CONSULTANTS

TAR-06-9/84

APPENDIX B

FIELD DATA AND CALCULATIONS

ORSAT DATA

CLIENT Exxon USA PROJECT NO. 145-02

SOURCE T-601 DATE 3-12-87

RUN NO. TIME		TRIAL 1	TRIAL 2	TRIAL 3	TRIAL 4	MEAN
Ambient Air	CO_2	0.0	0.0			
	TOTAL	20.8	20.8			
	O_2	20.8	20.8			20.8
1 0824-1120	CO_2	4.4	4.4			
	TOTAL	4.6	4.6			
	O_2	0.2	0.2			0.2
RUN 2 1216-1512	CO_2	4.2	4.2			
	TOTAL	4.4	4.4			
	O_2	0.2	0.2			0.2
Run 3 1620-1916	CO_2	4.2	4.2			
	TOTAL	4.4	4.4			
	O_2	0.2	0.2			0.2
	CO_2					
	TOTAL					
	O_2					
	CO_2					
	TOTAL					
	O_2					
	CO_2					
	TOTAL					
	O_2					

Page _____ of _____

ATC APPLIED TECHNOLOGY CONSULTANTS

TAR-04-9/84

RECOVERY DATA

CLIENT Exxon USA ATC PROJECT NO. 145-02

SOURCE T-601 DATE 3-12-87

	TRACE	DILUENT	TOTAL	INSTRUMENT DATA 1
ROT. READING	NA	NA	NA	CALIBRATION NUMBER 2
FLOW (L/min)	↓	↓	↓	TIME BEGAN/TIME END 1512/1610
CONC (ppm)	↓	↓	↓	PRE/~~POST~~ RUN NO. 3

TIME	PEAK AREA	AVE AREA	MEAS CONC	REMARKS/NOTES
1605	6.57×10^6			
1609	6.65×10^6	6.65×10^6	3.97	H_2S => System
1610	6.72×10^6			
1612	8.53×10^6			
1613	8.50×10^6	8.57×10^6	4.72	H_2S => GC
1614	8.67×10^6			
				Recovery = 84.1 %

	TRACE	DILUENT	TOTAL	INSTRUMENT DATA
ROT. READING				CALIBRATION NUMBER
FLOW (L/min)				TIME BEGAN/TIME END
CONC (ppm)				PRE/POST RUN NO.

TIME	PEAK AREA	AVE AREA	MEAS CONC	REMARKS/NOTES
1947	8.82×10^6			
1948	8.90×10^6	8.90×10^6	4.56	
1950	8.99×10^6			
1951	1.13×10^7			
1952	1.15×10^7	1.14×10^7	5.43	
1953	1.15×10^7			
				Recovery = 84.0 %

Page _____ of _____

APPLIED TECHNOLOGY CONSULTANTS

TAR-08-9/84

RECOVERY DATA

CLIENT Exxon U.S.A. ATC PROJECT NO. M5-02

SOURCE T-601 DATE 3-12-87

	TRACE	DILUENT	TOTAL	INSTRUMENT DATA 1
ROT. READING	NA	NA	NA	CALIBRATION NUMBER 1
FLOW (L/min)	↓	↓	↓	TIME BEGAN/TIME END 0715/0818
CONC (ppm)	↓	↓	↓	PRE/POST RUN NO. 1

TIME	PEAK AREA	AVE AREA	MEAS CONC	REMARKS/NOTES
0816	2.79×10^7			
0817	2.83×10^7	2.84×10^7	10.3	H_2S => System
0818	2.89×10^7			
0820	3.24×10^7			
0821	3.27×10^7	3.25×10^7	11.1	H_2S => GC
0822	3.23×10^7			
				Recovery = 92.8%

	TRACE	DILUENT	TOTAL	INSTRUMENT DATA 1
ROT. READING	NA	NA	NA	CALIBRATION NUMBER 1
FLOW (L/min)	↓	↓	↓	TIME BEGAN/TIME END 1120/1204
CONC (ppm)	↓	↓	↓	PRE/POST RUN NO. 2

TIME	PEAK AREA	AVE AREA	MEAS CONC	REMARKS/NOTES
1201	5.16×10^6			
1202	5.10×10^6	5.12×10^6	3.93	H_2S => System
1204	5.09×10^6			
1210	6.61×10^6			
1211	6.63×10^6	6.62×10^6	4.54	H_2S => GC
1212	6.61×10^6			
				Recovery = 86.6%

Page _____ of _____

APPLIED TECHNOLOGY CONSULTANTS

TAR-08-9/84

CALIBRATION DATA

(Method 15)

CLIENT Exxon USA ATC PROJECT NO. 145-02

SOURCE T-601 DATE 3-12-87

COMPOUND	H_2S	COS	CS_2		AMB TEMP
PERMEATION RATE (nL/min)	952	336	179		
TUBE NUMBER	86-26033	86-30457	24-30458		BARO PRESS
RETENTION TIME (min)	0.60	1.06	2.83		

TIME	FLOW (mL/min)	CMPD	KNOWN CONC. (ppm)	AREA (uv-sec) 1	2	3	AVG.	REMARKS
1556	211	H_2S	4.51	8.63	8.44	8.32	8.46×10^6	
		COS	1.59	1.53	1.26	1.23	1.34×10^6	
		CS_2	0.85	8.90	9.03	8.99	8.97×10^5	
1928	84.4	H_2S	11.3	3.38	3.38	3.40	3.39×10^7	
		COS	3.98	4.82	4.83	4.80	4.82×10^6	
		CS_2	2.12	2.92	2.91	2.90	2.91×10^6	
1940	146	H_2S	6.52	1.54	1.51	1.56	1.54×10^7	
		COS	2.30	1.96	1.91	2.27	2.05×10^6	
		CS_2	1.23	1.31	1.25	1.28	1.28×10^6	

Page _____ of _____

APPLIED TECHNOLOGY CONSULTANTS

TAR-02-9/84

CALCULATIONS

$$\text{Perm rate}_2 \left(\frac{\text{ng}}{\text{min}}\right) \times \frac{\text{molar vol @ 32°F (22.4 L)}}{\text{molecular wt of cmpd (g/mole)}} \times \frac{460° + \text{Amb Temp}}{492°} \times \frac{\text{Std Pres (29.92 in Hg)}}{\text{Amb Press}}$$

To calculate concentration in ppm:

$$\frac{\text{Emission rate (nL/min)}}{\text{Diluent flow mL/min)}}$$

H_2S $\frac{1330 \text{ ng}}{\text{min}} \times \frac{22.4 \text{ L}}{34.0 \text{ g/mole}} \times \frac{460 + 78}{492} \times \frac{29.92}{30.10} = \frac{952 \text{ nL}}{\text{min}}$

MeSH $\frac{\text{ng}}{\text{min}} \times \frac{22.4 \text{ L}}{48.1 \text{ g/mole}} \times \frac{460 +}{492} \times \frac{29.92}{___} = \frac{___ \text{ nL}}{\text{min}}$

DMS $\frac{\text{ng}}{\text{min}} \times \frac{22.4 \text{ L}}{62.1 \text{ g/mole}} \times \frac{460 +}{492} \times \frac{29.92}{___} = \frac{___ \text{ nL}}{\text{min}}$

DMDS $\frac{\text{ng}}{\text{min}} \times \frac{22.4 \text{ L}}{94.2 \text{ g/mole}} \times \frac{460 +}{492} \times \frac{29.92}{___} = \frac{___ \text{ nL}}{\text{min}}$

COS $\frac{830 \text{ ng}}{\text{min}} \times \frac{22.4 \text{ L}}{60.1 \text{ g/mole}} \times \frac{460 + 78}{492} \times \frac{29.92}{30.10} = \frac{336 \text{ nL}}{\text{min}}$

CS_2 $\frac{561 \text{ ng}}{\text{min}} \times \frac{22.4 \text{ L}}{76.1 \text{ g/mole}} \times \frac{460 + 78}{492} \times \frac{29.92}{30.10} = \frac{179 \text{ nL}}{\text{min}}$

CALIBRATION DATA

(Method 15)

CLIENT Exxon U.S.A ATC PROJECT NO. 145-02

SOURCE T-601 DATE 3-12-87

COMPOUND	H_2S	COS	CS_2		AMB TEMP
PERMEATION RATE (nL/min)	952	336	179		78°F
TUBE NUMBER	86-26033	86-30457	24-30458		BARO PRESS
RETENTION TIME (min)	0.60	1.06	2.83		30.10" Hg

TIME	FLOW (mL/min)	CMPD	KNOWN CONC. (ppm)	AREA (μv-sec) 1	2	3	AVG.	REMARKS
0716	103	H_2S	9.24	2.30	2.35	2.39	2.35 x10^7	
		COS	3.26	2.51	2.55	2.58	2.55 x10^6	
		CS_2	1.74	1.41	1.41	1.48	1.43 x10^6	
0736	156	H_2S	6.10	1.03	1.04	1.03	1.03 x10^7	
		COS	2.15	1.23	1.22	1.23	1.23 x10^6	
		CS_2	1.15	7.22	7.56	7.45	7.41 x10^5	
0808	295	H_2S	3.23	3.37	3.69	3.09	3.38 x10^6	
		COS	1.14	-	6.77	6.69	6.73 x10^5	
		CS_2	0.61	3.47	3.59	3.48	3.51 x10^5	
1136	75.2	H_2S	12.7	3.80	3.83	3.84	3.82 x10^7	
		COS	4.47	5.80	5.89	5.85	5.85 x10^6	
		CS_2	2.39 2.32	3.38	3.43	3.48	3.43 x10^6	
1148	212	H_2S	4.49	7.57	7.53	7.51	7.54 x10^6	
		COS	1.58	9.82	9.67	1.01	9.86 x10^5	
		CS_2	0.84	7.23	7.23	-	7.23 x10^5	
1528	71.6	H_2S	13.3	3.86	3.87	3.86	3.86 x10^7	
		COS	4.69	6.61	6.60	6.58	6.60 x10^6	
		CS_2	2.50	4.01	3.95	3.97	3.98 x10^6	

Page _____ of _____

ATC APPLIED TECHNOLOGY CONSULTANTS

VELOCITY TRAVERSE DATA

CLIENT Exxon PROJECT NO. 145-02

SOURCE T-601 DATE 3/12/87

STACK DIMENSION 48 CROSS SECTIONAL AREA _____ BAR. PRESSURE 30.10

PITOT TUBE ID # SPT AVG COEFFICIENT 1.00 DATE CAL. _____

SKETCH

RUN NO.	3		
TIME	1300		
T_s (DB)	68		
T_s (WB)	68		
P_s	-0.4		
O_2 Conc	0.2		
CO_2 Conc	4.2		
TRAVERSE PT	ΔP	ΔP	ΔP
	1/ 0.20	22/ 0.40	19/ 0.44
	2/ 0.22	23/ 0.39	20/ 0.44
	3/ 0.24	24/ 0.39	21/ 0.46
	4/ 0.26	1/ 0.20	22/ 0.44
	5/ 0.30	2/ 0.20	23/ 0.44
	6/ 0.32	3/ 0.22	24/ 0.46
	7/ 0.34	4/ 0.22	
	8/ 0.36	5/ 0.23	
	9/ 0.39	6/ 0.20	
	10/ 0.41	7/ 0.20	
	11/ 0.42	8/ 0.20	
	12/ 0.42	9/ 0.20	
	13/ 0.42	10/ 0.25	
	14/ 0.43	11/ 0.24	
	15/ 0.43	12/ 0.26	
	16/ 0.42	13/ 0.26	
	17/ 0.41	14/ 0.22	
	18/ 0.41	15/ 0.24	
	19/ 0.48	16/ 0.30	
	20/ 0.44	17/ 0.36	
	21/ 0.46	18/ 0.40	
$\sqrt{\Delta P}$ ave	0.57		
MOISTURE	0.023		
M_s	28.7		
V_s	36.1		
Q_A	28,700		
Q_s	28,200		

$$V_s = 85.49\ C_p \sqrt{\Delta P}\ \text{ave} \sqrt{\frac{T_s}{M_s\ P_s}}\ 528$$

$A_s = 12.56$

$$Q_A = 60\ V_s\ A_s$$

$$Q_s = Q_A (1-BWS)\ \frac{528}{T_s} \cdot \frac{P_s}{29.92}$$

Page _____ of _____

TAR-23-1/85

CLIENT Exxon USA ATC PROJECT NO. 145-02

SOURCE T-601 DATE 3-12-87

CALIBRATION SUMMARY

CMPD H_2S CURVE NO. 3

TIME	CONC	RESPONSE	CALC CONC	% DIFF
1528	13.3	3.86×10^7	12.8	-4
1556	4.51	8.46×10^6	4.40	-2
1928	11.3	3.39×10^7	11.7	+4
1940	6.52	1.54×10^7	6.71	+3

SLOPE 1.42 Y int 1.03×10^6

CONC @ 5000 = 0.02

CMPD COS CURVE NO. 3

TIME	CONC	RESPONSE	CALC CONC	% DIFF
1528	4.69	6.60×10^6	4.84	+3
1556	1.59	1.34×10^6	1.64	+3
1928	3.98	4.82×10^6	3.91	-2
1940	2.30	2.05×10^6	2.19	-5

SLOPE 1.48 Y int 6.42×10^5

CONC @ 5000 = 0.04

CMPD CS_2 CURVE NO. 3

TIME	CONC	RESPONSE	CALC CONC	% DIFF
1528	2.50	3.98×10^6	2.60	+4
1556	0.85	8.97×10^5	0.89	+5
1928	2.12	2.91×10^6	2.08	-2
1940	1.23	1.28×10^6	1.15	-6

SLOPE 1.39 Y int 1.05×10^6

CONC @ 5000 = 0.02

CMPD _____ CURVE NO. _____

TIME	CONC	RESPONSE	CALC CONC	% DIFF

SLOPE _____ Y int _____

CONC @ _____

RUN SUMMARY

Run 3

RUN NO	H_2S	COS	CS_2		
AVG MEAS TRS CONC, ppm	<0.02	4.48	<0.02		
SYS CORR FACTOR	0.841	0.841	0.841		
CORR TRS CONC, ppm	<0.03	5.33	<0.03		
OXYGEN CONC, %	0.2	0.2	0.2		
OXYGEN CORR FACTOR	1.01	1.01	1.01		
OXYGEN CORRECTED TRS, ppm	<0.03	5.38	<0.03		

Page _____ of _____

ATC APPLIED TECHNOLOGY CONSULTANTS

TAR-09-9/84

REDUCED SULFUR FIELD DATA

Client Exxon USA Source T-601 Date 3-12-87

Cal Curve 3 Inst Data 1 Recovery Data 3 Analyst WB

TIME	H_2S AREA	H_2S CONC (ppm)	COS AREA	COS CONC (ppm)	CS_2 AREA	CS_2 CONC (ppm)			TRS
1824			5.70×10^6	4.38					
1828			5.96×10^6	4.52					
1832			5.78×10^6	4.42					
1836			5.68×10^6	4.37					
1840			5.82×10^6	4.44					
1844			5.81×10^6	4.44					
1848			5.76×10^6	4.41					
1852			5.69×10^6	4.38					
1856			5.55×10^6	4.30					
1900			5.60×10^6	4.33					
1904			5.58×10^6	4.32					
1908			5.63×10^6	4.34					
1912			5.51×10^6	4.28					
1916			5.51×10^6	4.28					
	Average	<0.02		4.48		<0.02			

Page of

APPLIED TECHNOLOGY CONSULTANTS

REDUCED SULFUR FIELD DATA

Client Exxon USA Source T-601 Date 3-12-97

Cal Curve 3 Inst Data 1 Recovery Data 3 Analyst WB

TIME	H_2S AREA	H_2S CONC (ppm)	COS AREA	COS CONC (ppm)	CS_2 AREA	CS_2 CONC (ppm)				TRS
1620	ND	<0.02	6.88×10^6	4.98	ND	<0.02				
1624	ND		6.79×10^6	4.93	ND					
1628	ND		6.40×10^6	4.74	ND					
1632	ND		6.62×10^6	4.85	ND					
1636	ND		6.22×10^6	4.65	ND					
1640	ND		5.70×10^6	4.38	ND					
1644	ND		5.75×10^6	4.41	ND					
1648	ND		5.63×10^6	4.34	ND					
1652	ND		6.33×10^6	4.70	ND					
1656	ND		6.51×10^6	4.79	ND					
1700	ND		6.31×10^6	4.69	ND					
1704	ND		6.40×10^6	4.74	ND					
1708	ND		6.17×10^6	4.62	ND					
1712	ND		5.93×10^6	4.50	ND					
1716	ND		5.66×10^6	4.36	ND					
1720	ND		5.83×10^6	4.45	ND					
1724	ND		5.80×10^6	4.43	ND					
1728	ND		5.78×10^6	4.42	ND					
1732	ND		6.13×10^6	4.60	ND					
1736	ND		5.92×10^6	4.49	ND					
1740	ND		5.84×10^6	4.45	ND					
1744			6.10×10^6	4.59						
1748			5.85×10^6	4.46						
1752			5.49×10^6	4.27						
1756			5.61×10^6	4.33						
1800			5.71×10^6	4.39						
1804			5.64×10^6	4.35						
1808			5.57×10^6	4.31						
1812			5.80×10^6	4.43						
1816			5.76×10^6	4.41						
1820			5.67×10^6	4.37						

Page of

ATC APPLIED TECHNOLOGY CONSULTANTS

TAR-06-9/84

VELOCITY TRAVERSE DATA

CLIENT Exxon - Baytown PROJECT NO. 145-02

SOURCE T-601 DATE 3/12/87

STACK DIMENSION 48 CROSS SECTIONAL AREA _____ BAR. PRESSURE 30.1

PITOT TUBE ID # S-12 p.t.1 AVG COEFFICIENT 1.000 DATE CAL. —

SKETCH

RUN NO.	2		
TIME	1330		
T_s (DB)	72		
T_s (WB)	72		
P_s	-0.50		
O_2 Conc	0.2		
CO_2 Conc	4.2		
TRAVERSE PT	ΔP	ΔP	ΔP
	1/ 0.20	22/ 0.30	20/ 0.50
	2/ 0.25	23/ 0.35	21/ 0.52
	3/ 0.25	24/ 0.30	22/ 0.53
	4/ 0.25	1/ 0.22	23/ 0.54
	5/ 0.42	2/ 0.25	24/ 0.55
	6/ 0.42	3/ 0.22	
	7/ 0.42	4/ 0.21	
	8/ 0.40	5/ 0.22	
	9/ 0.40	6/ 0.24	
	10/ 0.44	7/ 0.25	
	11/ 0.45	8/ 0.25	
	12/ 0.42	9/ 0.25	
	13/ 0.45	10/ 0.26	
	14/ 0.45	11/ 0.26	
	15/ 0.45	13/ 0.25	
	16/ 0.44	14/ 0.29	
	17/ 0.40	15/ 0.30	
	18/ 0.40	16/ 0.40	
	19/ 0.30	17/ 0.42	
	20/ 0.30	18/ 0.45	
	21/ 0.30	19/ 0.45	
$\sqrt{\Delta P}$ ave	0.59		
MOISTURE	0.026		
M_s	28.7		
V_s	39.6		
Q_A	29,340		
Q_s	29,020		

$$V_s = 85.49\ C_p \sqrt{\Delta P}\ \text{ave} \sqrt{\frac{T_s}{M_s\ P_s}}$$

$$Q_A = 60\ V_s\ A_s$$

$$Q_s = Q_A (1\text{-BWS})\ \frac{528}{T_s} \cdot \frac{P_s}{29.92}$$

Page _____ of _____

TAR-23-1/85

APPLIED TECHNOLOGY CONSULTANTS

CLIENT Exxon USA ATC PROJECT NO. 145-02

SOURCE T-601 DATE 3-12-87

CALIBRATION SUMMARY

CMPD H_2S CURVE NO. 2

TIME	CONC	RESPONSE	CALC CONC	% DIFF
1148	4.49	7.54×10^6	4.33	-4
1136	12.7	3.82×10^7	13.0	+2
1528	13.3	3.86×10^7	13.0	-2
1556	4.51	8.46×10^6	4.68	+4

SLOPE 1.48 Y int 8.63×10^5

CONC @ 5000 = 0.03

CMPD COS CURVE NO. 2

TIME	CONC	RESPONSE	CALC CONC	% DIFF
1136	4.47	5.85×10^6	4.41	-1
1148	1.58	9.86×10^5	1.44	-9
1528	4.69	6.60×10^6	4.75	+1
1556	1.59	1.34×10^6	1.75	+10

SLOPE 1.59 Y int 5.51×10^5

CONC @ 5000 = 0.05

CMPD CS_2 CURVE NO. 2

TIME	CONC	RESPONSE	CALC CONC	% DIFF
1136	2.39	3.43×10^6	2.32	-3
1148	0.84	7.23×10^5	0.78	-7
1528	2.50	3.98×10^6	2.57	+3
1556	0.85	8.97×10^5	0.91	+7

SLOPE 1.44 Y int 1.02×10^6

CONC @ 5000 = 0.02

CMPD _____ CURVE NO. _____

TIME	CONC	RESPONSE	CALC CONC	% DIFF

SLOPE _____ Y int _____

CONC @ _____

RUN SUMMARY

Run 2

RUN NO	H_2S	COS	CS_2		
AVG MEAS TRS CONC, ppm	<0.03	4.30	<0.02		
SYS CORR FACTOR	0.854	0.454	0.854		
CORR TRS CONC, ppm	<0.04	5.04	<0.02		
OXYGEN CONC, %	0.2	0.2	0.2		
OXYGEN CORR FACTOR	1.01	1.01	1.01		
OXYGEN CORRECTED TRS, ppm	<0.04	5.09	<0.02		

Page _____ of _____

ATC APPLIED TECHNOLOGY CONSULTANTS

TAR-09-9/84

REDUCED SULFUR FIELD DATA

Client Exxon USA Source T-601 Date 3-12-87

Cal Curve 2 Inst Data 1 Recovery Data 2 Analyst WB

TIME	H_2S AREA	H_2S CONC (ppm)	COS AREA	COS CONC (ppm)	CS_2 AREA	CS_2 CONC (ppm)			TRS
1420	ND		5.78×10^6	4.37	ND				
1424			5.66×10^6	4.32					
1428			5.75×10^6	4.36					
1432			5.70×10^6	4.33					
1436			5.97×10^6	4.46					
1440			5.91×10^6	4.43					
1444			5.61×10^6	4.29					
1448			5.65×10^6	4.31					
1452			5.57×10^6	4.27					
1456			5.77×10^6	4.37					
1500			5.89×10^6	4.42					
1504			5.54×10^6	4.26					
1508			5.95×10^6	4.45					
1512			5.80×10^6	4.38					
	Average	<0.03		4.30		<0.02			

Page of

TAR-06-9/84

APPLIED TECHNOLOGY CONSULTANTS

REDUCED SULFUR FIELD DATA

Client Exxon USA Source T-601 Date 3-12-87

Cal Curve 2 Inst Data 1 Recovery Data 2 Analyst WB

TIME	H_2S AREA	H_2S CONC (ppm)	COS AREA	COS CONC (ppm)	CS_2 AREA	CS_2 CONC (ppm)			TRS
1216	ND		5.21×10^6	4.10	ND				
1220	ND		5.29×10^6	4.14	ND				
1224	ND		5.06×10^6	4.02	ND				
1228	ND		5.47×10^6	4.22	ND				
1232	ND		5.61×10^6	4.29	ND				
1236	ND		5.46×10^6	4.22	ND				
1240	ND		5.54×10^6	4.26	ND				
1244	ND		5.50×10^6	4.24	ND				
1248	ND		5.19×10^6	4.09	ND				
1252	ND		5.24×10^6	4.11	ND				
1256	ND		5.49×10^6	4.23	ND				
1300	ND		5.94×10^6	4.45	ND				
1304	ND		5.49×10^6	4.23	ND				
1308	ND		5.54×10^6	4.26	ND				
1312	ND		5.57×10^6	4.27	ND				
1316	ND		5.68×10^6	4.33	ND				
1320	ND		5.58×10^6	4.28	ND				
1324	ND		5.49×10^6	4.23	ND				
1328	ND		5.66×10^6	4.32	ND				
1332	ND		5.40×10^6	4.20	ND				
1336	ND		5.63×10^6	4.30	ND				
1340	ND		5.91×10^6	4.39	ND				
1344	ND		5.65×10^6	4.31	ND				
1348	ND		5.62×10^6	4.30	ND				
1352	ND		5.59×10^6	4.28	ND				
1356	ND		5.69×10^6	4.33	ND				
1400	ND		5.75×10^6	4.36	ND				
1404	ND		5.80×10^6	4.38	ND				
1408	ND		5.83×10^6	4.40	ND				
1412	ND		5.76×10^6	4.36	ND				
1416	ND		5.75×10^6	4.36	ND				

Page of

APPLIED TECHNOLOGY CONSULTANTS

TAR-06-9/84

Mass Emission Rate Calculations

Run No 1

lb H_2S/Hr = (<0.13) (29,020) (60) (8.83×10^{-8}) = <0.02
lb COS/Hr = (5.16) (29,020) (60) (1.56×10^{-7}) = 1.40
lb CS_2/Hr = (<0.02) (29,020) (60) (1.98×10^{-7}) = <0.01

lb TRS/Hr = <1.44

Run No 2

lb H_2S/Hr = (<0.04) (29,020) (60) (8.83×10^{-8}) = <0.01
lb COS/Hr = (5.09) (29,020) (60) (1.56×10^{-7}) = 1.38
lb CS_2/Hr = (<0.02) (29,020) (60) (1.98×10^{-7}) = <0.01

lb TRS/Hr = <1.41

Run No 3

lb H_2S/Hr = (<0.03) (28,200) (60) (8.83×10^{-8}) = <0.01
lb COS/Hr = (5.35) (28,200) (60) (1.56×10^{-7}) = 1.42
lb CS_2/Hr = (<0.03) (28,200) (60) (1.98×10^{-7}) = <0.01

lb TRS/Hr = <1.45

PRELIMINARY VELOCITY DATA

CLIENT Exxon ATC PROJECT NO. 145-02

SOURCE T-601 DATE 3/12/87

DUCT DATA

Dist from far wall to outside of port	48	in.
Nipple length	—	in.
Depth of duct	48	in.
Width of duct (rec)	—	in.
Area of duct	12.56	ft^2

Equivalent diameter

$$\frac{2 \times \text{depth} \times \text{width}}{\text{depth} + \text{width}}$$

$$\frac{2(\quad)(\quad)}{(\quad)+(\quad)}$$

Dist from ports to nearest disturbance

	up-stream	down-stream
ft		
dia		

LOCATION OF TRAVERSE POINTS

Distance upstream of disturbance

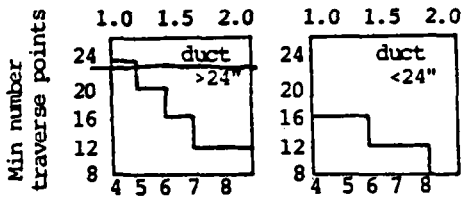

Distance downstream from disturbance

CIRCULAR DUCTS

Traverse point number on a diameter	(Percent of stack diameter from inside wall to traverse point) 2	4	6	8	10	12
1	14.6	6.7	4.4	3.2	2.6	2.1
2	85.4	25.0	14.6	10.5	8.2	6.7
3		75.0	29.6	19.4	14.6	11.8
4		93.3	70.4	32.3	22.6	17.7
5			85.4	67.7	34.2	25.0
6			95.6	80.6	65.8	35.6
7				89.5	77.4	64.4
8				96.8	85.4	75.0
9					91.8	82.3
10					97.4	88.2
11						93.3
12						97.9

RECTANGULAR DUCTS

	2	3	4	5	6	7	8	9	10	11	12
1	25.0	16.7	12.5	10.0	8.3	7.1	6.3	5.6	5.0	4.5	4.2
2	75.0	50.0	37.5	30.0	25.0	21.4	18.8	16.7	15.0	13.6	12.5
3		83.3	62.5	50.0	41.7	35.7	31.3	27.8	25.0	22.7	20.8
4			87.5	70.0	58.3	50.0	43.8	38.9	35.0	31.8	29.2
5				90.0	75.0	64.3	56.3	50.0	45.0	40.9	37.5
6					91.7	78.6	68.8	61.1	55.0	50.0	45.8
7						92.9	81.3	72.2	65.0	59.1	54.2
8							93.8	83.3	75.0	68.2	62.5
9								94.4	85.0	77.3	70.8
10									95.0	86.4	79.2
11										95.5	87.5
12											95.8

MEASUREMENTS

Traverse Point	% of Diameter	Distance from inside wall	Distance from outside of port
1	1.1	0.53	
2	3.2	1.54	
3	5.5	2.64	
4	7.9	3.79	
5	10.5	5.04	
6	13.2	6.34	
7	16.1	7.73	
8	19.4	9.31	
9	23.0	11.04	
10	27.2	13.1	
11	32.3	15.5	
12	39.5	19.1	
13	60.2	28.9	
14	67.7	32.5	
15	72.5	34.9	
16	77.0	37.0	
17	80.6	38.7	
18	83.9	40.3	
19	86.5	41.7	
20	89.5	43.0	
21	92.1	44.2	
22	94.5	45.4	
23	96.8	46.5	
24	98.9	47.5	

Page _____ of _____

ATC APPLIED TECHNOLOGY CONSULTANTS

TAR-42-1/85

APPENDIX C

PROCESS SCHEMATIC

DISTRIBUTION: 1 DSGN ENGR | 2 PROJECT ENGR | 3 DSGN DEPT | 4 PLANNING | 5 OPER | 6 EQUIP SECT | 7 PLDENG | 8 DRAFTSMAN | TOTAL

PAGE 901
D.S. 83-148

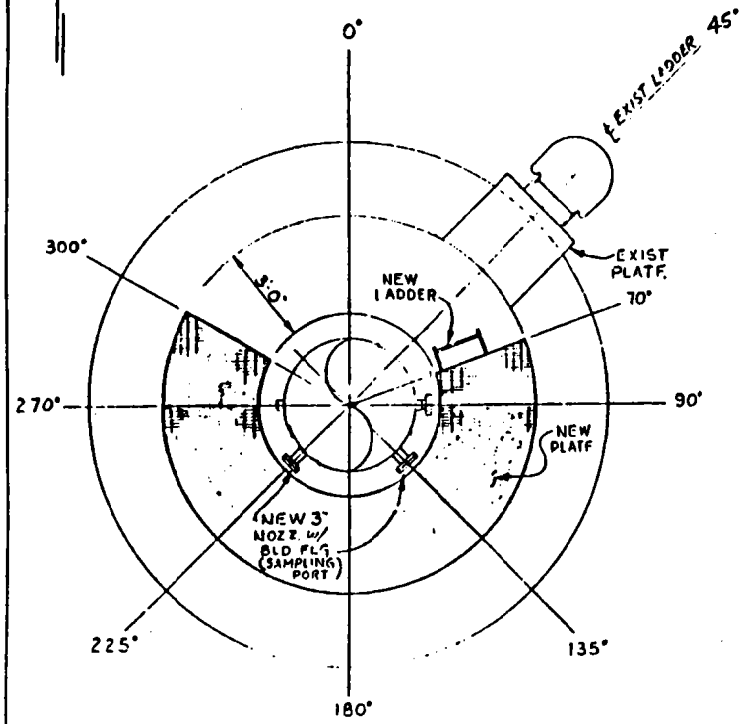

PLAN
T-601

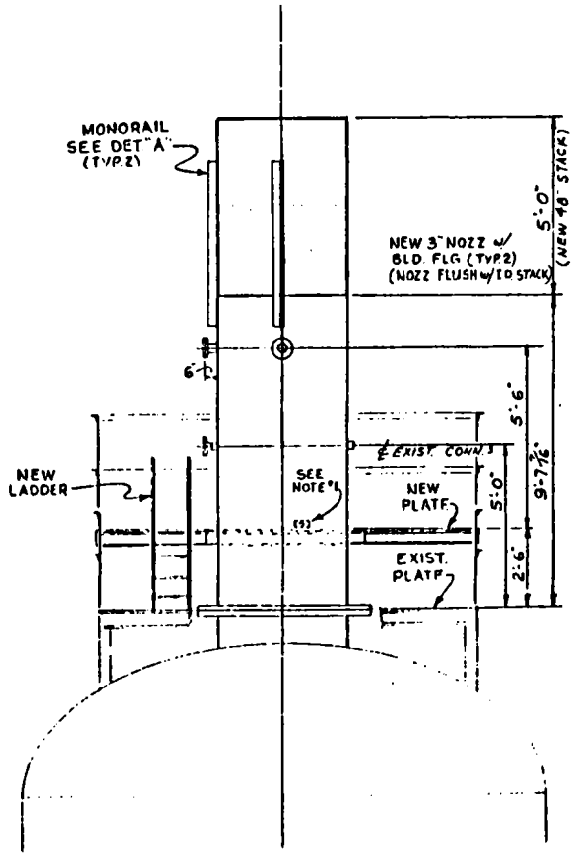

ELEVATION
T-601

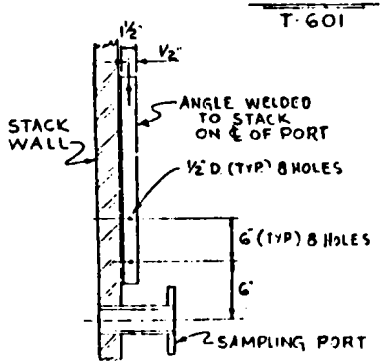

DETAIL "A"

NOTES:

1. ONE - 115 VOLT OUTLET AT PLATFORM AND TWO - 115 VOLT OUTLETS AND ONE 220 VOLT OUTLET AT BASE OF T-601.
2. THE PORT OR MONORAIL SUPPORT INSTALLATION SHALL BE CAPABLE OF SUPPORTING VERTICAL LOAD OF 200#, HORIZONTAL LOAD OF 200# AND RADIAL LOAD OF 1000#.
3. THE WORK PLATFORM MUST BE CAPABLE OF SUPPORTING AT LEAST 2000#.
4. AT EACH PORT A CLEARANCE ZONE SHALL EXTEND ONE FOOT ABOVE THE PORT, TWO FEET BELOW THE PORT, AND TWO FEET TO EITHER SIDE OF THE PORT. THE ZONE SHALL EXTEND OUTWARD FORM THE EXTERIOR WALL OF THE STACK EIGHT FEET.

REV NO. 0

REFINING DEPARTMENT | EXXON COMPANY, U.S.A. | BAYTOWN REFINERY

T-601
VENT STACK
SAMPLING FACILITIES

DRAWN: MILLS

SK-602-DD

CLASSIFICATION

APPENDIX D

CALIBRATIONS AND CERTIFICATIONS

CERTIFICATE

The permeation rate of the DYNACAL® PERMEATION DEVICE listed below is certified traceable to N.B.S. standards.

CHEMICAL FILL	:	HYDROGEN SULFIDE
DEVICE TYPE	:	WAFER DEVICE
LENGTH/GEOMETRY	:	30T3 WAFER
PART NUMBER	:	147-533-0110
METHOD OF CERTIFICATION	:	GRAVIMETRIC
CERTIFICATION NUMBER	:	86-26033

RATE: 1330 NG/MIN +/- 5% AT 50 DEG C
NOTE:
DATE: 10 NOVEMBER 1986 BY: Mary Serrano

VICI

VICI Metronics
2991 Corvin Drive
Santa Clara, California 95051 U.S.A.
(408) 737-0550 Telex: 35-2129

INDIVIDUAL DEVICE CERTIFICATION

The gravimetric method measures the weight loss per unit of time at the certification temperature. Traceability is thus established by the use of temperature and weight standards traceable to N.B.S. standards.

Individual certification is accomplished by: (1) maintaining the device in a constant temperature chamber with a purge flow of dry nitrogen, and (2) weighing periodically on a semi-microanalytical balance, accurate to the nearest 0.01 mg, until a steady weight loss per unit time has been achieved. Temperature control and accuracy are better than ± 0.05°C, referenced against temperature standards traceable to the National Bureau of Standards. The semi-microanalytical balances are routinely serviced and calibrated by an independent service organization using N.B.S. traceable weight standards. Gravimetric permeation rate determinations are continued until the standard error of the permeation rate meets the required accuracy at the 95% confidence level.

Validation of the certification procedures and standards at **VICI Metronics** is accomplished by routine certification of Standard Reference Material (SRM) permeation devices obtained from the National Bureau of Standards.

CERTIFICATE

The permeation rate of the DYNACAL® PERMEATION DEVICE listed below is certified traceable to N.B.S. standards.

CHEMICAL FILL	:	CARBONYL SULFIDE
DEVICE TYPE	:	WAFER DEVICE
LENGTH/GEOMETRY	:	50F3 WAFER
PART NUMBER	:	147-653-7600
METHOD OF CERTIFICATION	:	GRAVIMETRIC
CERTIFICATION NUMBER	:	86-30457

RATE: 830 NG/MIN +/- 5% AT 50 DEG C
NOTE:
DATE: 10 NOVEMBER 1986 BY: Mary Serrano

VICI

VICI Metronics
2991 Corvin Drive
Santa Clara, California 95051 U.S.A.
(408) 737-0550 Telex: 35-2129

INDIVIDUAL DEVICE CERTIFICATION

The gravimetric method measures the weight loss per unit of time at the certification temperature. Traceability is thus established by the use of temperature and weight standards traceable to N.B.S. standards.

Individual certification is accomplished by: (1) maintaining the device in a constant temperature chamber with a purge flow of dry nitrogen, and (2) weighing periodically on a semi-microanalytical balance, accurate to the nearest 0.01 mg, until a steady weight loss per unit time has been achieved. Temperature control and accuracy are better than ± 0.05°C, referenced against temperature standards traceable to the National Bureau of Standards. The semi-microanalytical balances are routinely serviced and calibrated by an independent service organization using N.B.S. traceable weight standards. Gravimetric permeation rate determinations are continued until the standard error of the permeation rate meets the required accuracy at the 95% confidence level.

Validation of the certification procedures and standards at VICI Metronics is accomplished by routine certification of Standard Reference Material (SRM) permeation devices obtained from the National Bureau of Standards.

CERTIFICATE

The permeation rate of the DYNACAL® PERMEATION DEVICE listed below is certified traceable to N.B.S. standards.

CHEMICAL FILL	:	CARBON DISULFIDE
DEVICE TYPE	:	STANDARD EMISSION TUBE
LENGTH/GEOMETRY	:	2.0 CM.
PART NUMBER	:	117-020-6300
METHOD OF CERTIFICATION	:	GRAVIMETRIC
CERTIFICATION NUMBER	:	24-30458

RATE: 561 NG/MIN +/- 2% AT 50 DEG C
NOTE:
DATE: 10 NOVEMBER 1986 BY: Mary Serrano

VICI

VICI Metronics
2991 Corvin Drive
Santa Clara, California 95051 U.S.A.
(408) 737-0550 Telex: 35-2129

INDIVIDUAL DEVICE CERTIFICATION

The gravimetric method measures the weight loss per unit of time at the certification temperature. Traceability is thus established by the use of temperature and weight standards traceable to N.B.S. standards.

Individual certification is accomplished by: (1) maintaining the device in a constant temperature chamber with a purge flow of dry nitrogen, and (2) weighing periodically on a semi-microanalytical balance, accurate to the nearest 0.01 mg, until a steady weight loss per unit time has been achieved. Temperature control and accuracy are better than ± 0.05°C, referenced against temperature standards traceable to the National Bureau of Standards. The semi-microanalytical balances are routinely serviced and calibrated by an independent service organization using N.B.S. traceable weight standards. Gravimetric permeation rate determinations are continued until the standard error of the permeation rate meets the required accuracy at the 95% confidence level.

Validation of the certification procedures and standards at VICI Metronics is accomplished by routine certification of Standard Reference Material (SRM) permeation devices obtained from the National Bureau of Standards.

WALTER H. KESSLER COMPANY, INC.

THERMOMETERS HYDROMETERS

ONE-SIXTY HICKS STREET • WESTBURY, LONG ISLAND, NEW YORK 516 EDGEWOOD 4-4083

CERTIFICATE OF CALIBRATION

This is to certify that the instrument listed below has been certified in our temperature calibration laboratory using the most sensitive constant temperature equipment available. This calibration has been performed against National Bureau of Standards certified master instruments in accordance with the procedures outlined by ASTM E77-84 and NBS Monograph 150.

Certified for: FISHER SCIENTIFIC COMPANY

Description: THERMOMETER #15-041A -1/51C IN 0.1 DEG DIV TOTAL IMMERSION

Instrument Serial No.: 862-390 **Date Certified:** 5/30/86

Reading of This Instrument	Reading of N.B.S. Standard (True Temperature)
0.00 C	0.00 C
10.00 C	10.00 C
20.02 C	20.00 C
30.00 C	30.00 C
39.98 C	40.00 C
49.99 C	50.00 C

The tabulated readings apply provided the ice-point reading taken after exposure for not less than 3 days to a temperature of about 25°C (77°F) is 0.00 C . If the ice-point reading is found to be higher (or lower) than stated, all other readings will be higher (or lower) by the same amount.

Serial and Test numbers of National Bureau of Standards certified instruments referenced in certification of the thermometer listed above:

NBS TEST#,STD#'S:769543,217368/P14452,176240/P14452,176240/M44165,176240/

CALIBRATION TECHNICIAN:F. BURGHARDT Q.A.MANAGER:J KELLY

WALTER H. KESSLER COMPANY, INC.

VICI METRONICS

DYNACALIBRATOR MODEL :230-09 DATE CALIBRATED :4-05-84
SERIAL NUMBER : M-731 BY KAR

STANDARD TEMPERATURE RANGE

TEMPERATURE -DEG C-	DIGITAL SETTING
25	290
26	321
27	350
28	378
29	405
30	431
31	455
32	479
33	502
34	524
35	544
36	564
37	584
38	602
39	620
40	637
41	653
42	669
43	684
44	698
45	712
46	725
47	738
48	750
49	762
50	774

APPENDIX E

REFERENCE METHOD 15 ANALYTICAL METHODOLOGY

DESCRIPTION OF PROCEDURES
ROUTINELY USED BY ATC, INC. TO
PERFORM REDUCED SULFUR ANALYSES
IN ACCORDANCE WITH
REFERENCE METHOD 15
ANALYTICAL METHODOLOGY

Total reduced sulfur (TRS) testing is performed using the general techniques and procedures described in EPA Method 15. This section describes the instrumentation, equipment and procedures used by ATC to conduct reduced sulfur emission testing in accordance with the guidelines given in the Method. Compounds of interest include hydrogen sulfide (H_2S), carbonyl sulfide (COS) and carbon disulfide (CS_2) from petroleum refinery sources. The equipment and techniques described herein have been evaluated by ATC personnel and have been found acceptable to measure reduced sulfur emissions from regulated sources.

A continuous gas sample is extracted from the emission source; scrubbed through a cold, buffered citrate solution (to remove particulate, moisture and sulfur dioxide); transported to the mobile laboratory through an inert sample line; and analyzed by gas chromatographic separation with flame photometric detection.

EQUIPMENT AND INSTRUMENTATION

As shown in Figure 1, the system consists of a Teflon-lined probe, a cold, liquid scrubber, a nylon sample transfer line, a gas chromatograph, an integrator/chart recorder, a standard gas generator and the associated pumps, valves and gases. This configuration is used regardless of the source tested, but the GC conditions may be changed to achieve the desired separation of compounds.

The Teflon-lined, stainless steel probe (of sufficient length to monitor the gas stream without wall effects) is used to extract a gas sample from the emission source. The probe assembly is configured to allow the introduction of a trace gas (H_2S) at the tip of the probe to evaluate the performance of the entire analytical system, and the tip is directed away from stack gas flow to minimize particulate and moisture entrainment. The probe outlet is plumbed directly to the sample conditioning system.

The sample conditioning system consists of two 250-mL Teflon impingers containing a citrate buffer solution. The Teflon sample line drops directly into the first Teflon impinger which contains approximately a 2 molar solution of potassium citrate at a pH of 5.4 - 5.8. At this pH, SO_2 is selectively removed without affecting the reduced sulfur compounds. The impingers are emersed in an ice bath to reduce the gas temperature to 4 or 5°C, thus condensing the moisture. Particulate matter is also removed by the impingers as the gas is washed with the citrate solution.

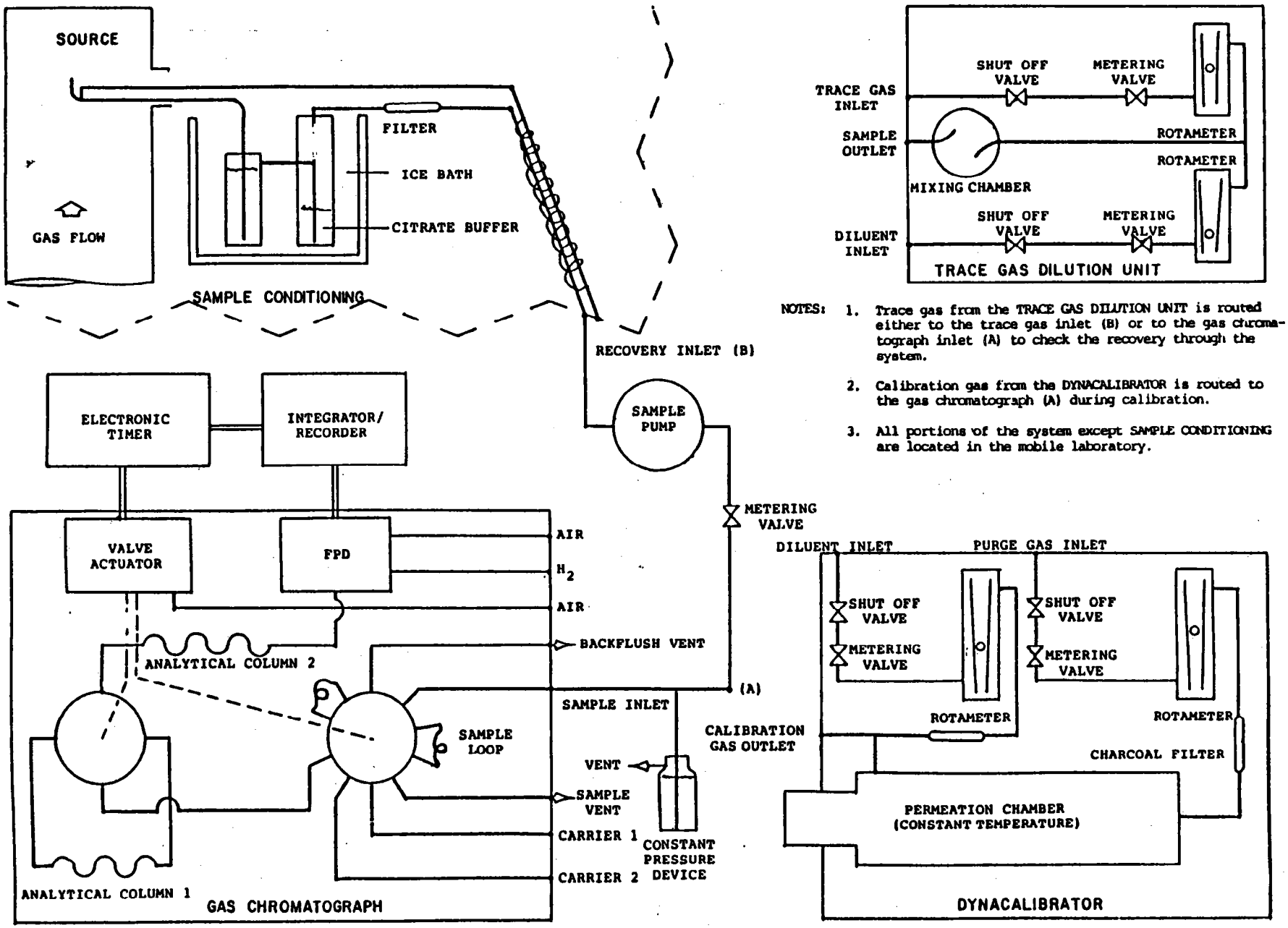

NOTES:

1. Trace gas from the TRACE GAS DILUTION UNIT is routed either to the trace gas inlet (B) or to the gas chromatograph inlet (A) to check the recovery through the system.
2. Calibration gas from the DYNACALIBRATOR is routed to the gas chromatograph (A) during calibration.
3. All portions of the system except SAMPLE CONDITIONING are located in the mobile laboratory.

FIGURE 1 SCHEMATIC DRAWING OF TRS ANALYTICAL SYSTEM

The sample conditioning system (cold, citrate buffer) is located as close to the sample port as practical to remove moisture and particulate from the sample before transport through sample lines to the mobile laboratory. This method of sample conditioning provides better recovery of reduced sulfur compounds than heating the sample and/or diluting with dry air. The citrate buffer solution removes moisture and particulate matter which may absorb H_2S during transport to the GC. By conditioning the sample at the source, loss of reduced sulfur compounds in the sample transport system is minimized.

The conditioning system has been evaluated by ATC personnel and has been found to quantitatively pass all reduced sulfur compounds of concern. Recovery of H_2S through the scrubber is demonstrated before and after each sample run.

The dry (approximately 1 percent moisture) gas is filtered through a microfibre filter before transport to the mobile laboratory through an unheated, nylon sample line. Nylon has been shown to be inert to the reduced sulfur compounds of concern and 200 meters of sample line may be used to transport the sample with greater than 95 percent efficiency.

The sample gas is transported to the mobile laboratory at 1.5 to 2.0 L/min by a diaphragm pump. With a sample line of 170-m x 4-mm ID tubing, the sample residence time is less than two minutes. Forty to sixty mL/min of sample gas are forced through the gas sampling valve and the excess gas is vented through the constant pressure device. The constant pressure device ensures that all samples and calibration gas are analyzed under the same conditions.

The gas chromatograph is a Tracor Model 270HA or a Shimadzu Mini 2 with a flame photometric detector. The carrier gas flow is reversed with the four-port valve during the analysis to achieve separation of all reduced sulfur compounds on the 2-m x 3-mm OD Carbosorb BHT 100 column. Column No. 2 is a 0.6-m x 30-mm OD Teflon tube packed with polyphenyl ether on Teflon beads. The ten-port valve is used to inject the sample from the sample loop. Both valves are solenoid operated and the switching of each is controlled by digital valve interfaces triggered by the electronic timer. A precolumn is not normally required for the separation and a 1.6-mm OD Teflon line is used instead. The sample loop is the length of a 3-mm OD Teflon tube. Varying the length of this tube changes the amount of sample that is analyzed during any injection. Figure 2 shows a typical chromatogram generated by the gas chromatograph.

The peak areas are measured with a Hewlett Packard Model 3390A electronic integrator. The concentration of sulfur in the gas is proportional to the peak areas as well as peak height. A strip chart recording of the peaks is obtained simultaneously on the same instrument.

The gas chromatograph is field calibrated for each of the reduced sulfur compounds of concern. Calibration gas is generated using a VICI-Metronics Model 230 Dynacalibrator. As shown in the schematic drawing of Figure 1, the gas flow through the chamber and the diluent may be varied to produce a 100-fold change in the calibration gas concentrations. Permeation devices for each reduced sulfur compound, purchased from VICI-Metronics, are gravimetrically certified by the vendor to permeate at a known rate ±5 percent.

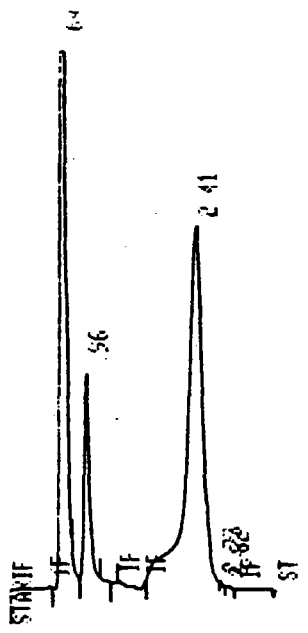

RUN # 34 JAN 1 APR/17/84 07:10:00

AREA%:

RT	AREA	TYPE	AR/HI	AREA%
0.54	1422400	PB	0.053	49.92
0.96	223840	PB	0.076	7.778
2.41	1227000	BV	0.239	42.031
2.73	3521	D VV	0.040	0.122
2.8[illegible]	1341	D VP	0.045	0.047

TOTAL AREA= 2878100
MUL FACTOR= 1.0000E+00

H_2Flow = 50 mL/min

Air Flow = 110 mL/min

$N_2$1 Flow = 25 mL/min

$N_2$2 Flow = 45mL/min

Attenuation = 2^4

Chart Speed = 1 cm/min

Trailer Temp: 20°C

Detector Temp: 120°C

Column Temp: 60°C

Columns: 7' x 1/8" Carbosorb B HT 100
18" x 1/8" Polyphenyl Ether

Event 1: 01 sec, Start, Inject (10-port valve)

Event 2: 90 sec, Load (10-port valve)

Event 3: 90 sec, Reverse Flow (4-port valve)

Event 4: 210 sec, forward flow (4-port valve)

Cycle time: 240 sec

COMPOUND	RETENTION TIME (MIN)	CONCENTRATION (PPM)
H_2S	0.64	21.9
COS	0.96	12.0
CS_2	2.41	7.1

FIGURE 2 TYPICAL CHROMATOGRAM

A known concentration of H_2S to evaluate system performance is generated by diluting 100 ppm H_2S with dry air using matched rotameters. A 5-10 ppm H_2S concentration is introduced at the probe and then at the gas chromatograph to determine the loss of H_2S through the system. Because the trace gas goes through the citrate scrubber, the system recovery also includes moisture correction so that all results are reported on a dry basis.

Oxygen concentration is monitored on a continuous basis at the outlet of the GC vent with a Teledyne Model 320 oxygen analyzer. This measurement is an excellent indicator of leaks.

All rotameters in the system are used to measure consistency of flow and not actually to measure the gas flow. All critical gas flows (Dyna-calibrator, trace gas, etc.) are measured at each time of use with a soap bubble flow tube and a stopwatch. The calibration curves for noncritical rotameters are verified periodically by the soap bubble flow tube method.

METHODOLOGY

Before testing begins, the GC is checked thoroughly for proper operation. A standard gas (a mixture of all reduced sulfur compounds) is injected several times to verify compound retention times and to check the response (peak area) with previously obtained calibration curves.

Before testing on a source actually begins, the sample line is placed in position from the source to the GC set-up and rinsed thoroughly with acetic acid, water and acetone to clean the surface. The sampling system is leak checked by capping the probe and pulling a 10 in. Hg vacuum on the entire system. The sample flow rate at the pump outlet is measured with a soap bubble flow tube. A leak free system is defined as one having a leak rate of less than two percent of the sample flow rate. Because the sampling pump has a maximum vacuum capacity of 10 in. Hg and the normal vacuum in the system is less than 2 in. Hg, the leak check procedure subjects the system to significantly more rigorous conditions than during normal sampling. The entire system simultaneously operated under slight vacuum and any leaks during a run are indicated by an increase in oxygen content and/or a reduction in the recovery of H_2S through the system.

The train is then completely assembled and the probe is inserted into the source. The probe is allowed to reach thermal equilibrium while gas is being pulled through the system. An excess of a known concentration of H_2S is introduced at the probe tip and pulled through the entire analytical system and then injected at the GC to check the recovery through the clean system. After the recovery has stabilized, the standard gas is disconnected from the probe and source gas is collected for a minimum of 15 minutes to ensure the sample line is properly conditioned before TRS concentrations are recorded.

Calibration curves are prepared for each compound before each test begins and verified after each run. Each gas concentration is injected at least three times to ensure instrument stability. The resulting calibration curves are made from the mean response of three injections of at least three different concentrations. All gas flow rates from the dyna-calibrator are measured at the time of use using the soap bubble flow tube technique.

At the end of each sampling run, an H_2S standard is again introduced at the probe to check sample loss in the system. Trace gas recovery is evaluated by injecting 5-10 ppm H_2S gas stream at the probe tip and recovering that sample through the sample conditioning and sample transport subsystems. The same gas stream was then introduced directly to the GC sample loop. The ratio of concentrations (based on calibration curves prepared from certified permeation devices) corrects for TRS loss, sample line leakage and moisture in the system. This factor is then used to adjust all measured reduced sulfur compound concentrations to provide results on a dry basis.

If moisture collection is excessive or if the scrubbing solution appears spent, the citrate buffer in the impingers may be changed. Under normal circumstances, one batch of scrubbing solution is sufficient for three 3-hour runs. Exceptions are noted on the field data sheets.

DATA MANIPULATION AND CALCULATION

Peak areas for the compounds of concern are transcribed from the integrator output to data sheets by the instrument operator. All integrator tapes are filed and the "Source Data" sheet is considered to be the record of the test. The instrument operating conditions, calibration data and recovery data are also transcribed from the integrator tape to the appropriate data sheets.

Data reduction is accomplished by referral to calibration curves generated from the analysis of known concentrations of each compound. Calibration curves fit the general equation of $Y = aX^b$. Coefficients of this equation are determined using a Hewlett Packard 15-C calculator programmed with a linear least squares program to give the best fit of the points. Correlation coefficients (R^2 values) are typically 0.98 or better. Copies of calibration curves used for data calculation are included in the appropriate appendix of the report.

The following information is provided as a guide to the reader to demonstrate the method of calculating TRS concentrations from raw data. The general procedure involves the preparation of a calibration curve for each compound of interest from gravimetrically certified permeation devices and then the calculation of source concentrations using the curve generated. Hypothetical data are included as an example.

The permeant concentration in diluent gas stream is given by the equation:

$$C = \frac{24.04\ P}{MF}$$

Where

C = concentration, ppm
P = device permeation rate, ng/min
F = diluent flow rate, mL/min
M = molecular weight of permeant
24.04 = molar volume at 20°C and 760 mm HG

Example

Given a standard, extended-life H_2S permeation device which permeates at a rate of 2410 ng/min. The diluent flow over the device is 543 mL/min, then

$$C = \frac{24.04 \times 2410}{34.08 \times 543} = 3.13 \text{ ppm}$$

At least three permeant concentrations are used to construct a calibration curve. Each calibration point is considered valid when the mean peak area of three successive injections does not differ by more than five percent from the peak areas contributing to the mean. The slope of the calibration curve is given by the equation:

$$Y = aX^b \text{ or } \log a = b \log X$$

Where

Y = response for concentration X
b = slope
a = constant

In theory, the slope of the calibration curve should be 2.0. Normally calibration curves have slopes between 1.6 and 2.2. Slopes of less than 1.6 may be acceptable if the measured concentrations are clearly within the linear region of the calibration curve. An example calculation is provided in Table 1.

The calibration curve for each compound is checked after each run for drift. If the calculated concentration exceeds the known concentration by more than ten percent, a new calibration curve is constructed. Sample concentrations must be calculated from the curve which yield the greatest concentration values.

The "three successive injections" criterion outlined in the calibration section is also applicable to trace gas recovery. The equation defining trace gas recovery is:

$$\% \text{ Recovery} = \frac{\text{Conc of trace gas recovered through the system}}{\text{Conc of trace gas measured at GC}} \times 100\%$$

The system correction factor is calculated by the following equation:

$$\text{System Correction Factor} = \frac{100}{\% \text{ Recovery}}$$

The concentration of the trace gas recovered through the system should be within 20 percent of the known TRS concentrations. Recovery values of less than 80 percent are normally unacceptable.

All measured concentrations are multiplied by the system correction factor; thus all data is corrected for sample line losses and is expressed on a dry basis.

TABLE 1

EXAMPLE CALCULATION

Calibration Point	1	2	3	4
Known Concentration[a]	10.5	6.41	2.92	1.39
Peak Areas[b]				
1	1.36×10^7	5.08×10^6	1.19×10^6	3.01×10^5
2	1.32×10^7	5.04×10^6	1.17×10^6	3.13×10^5
3	1.33×10^7	5.11×10^6	1.19×10^6	3.08×10^5
Mean Peak Area[b]	1.35×10^7	5.08×10^6	1.18×10^6	3.07×10^5
Difference of Individual Peak Areas From Mean Peak Area				
1	1.5%	0	<1%	2%
2	1.5%	<1%	<1%	2%
3	<1%	<1%	<1%	<1%
Calculated Concentration	10.6	6.33	2.89	1.40
Difference Between Known Concentration and Calculated Concentration	<1%	1.2%	1%	<1%

The slope of this H_2S calibration curve is 1.86

[a] ppm, based on permeation rates and diluent flow

[b] uv-sec

QUALITY ASSURANCE

All GC calibrations are performed using gases generated from certified permeation devices. The emission rate of each permeation device rate is gravimetrically measured to an accuracy of ±5 percent. The emission rate is determined in a constant temperature chamber at a temperature which is traceable to NBS standard. The constant temperature chamber of the ATC Dynacalibrator is certified by the vendor at the same temperature as the permeation device certification. All permeation devices are periodically replaced to ensure that they are used only during the recommended lifetime. The known emission rate coupled with the accurate measurement of the dilution gas flow ensures accurate generation of standard concentrations.

After preparation of a calibration curve from the linear least squares best fit the data, the mean response obtained for each gas concentration is used to calculate the concentration equivalent to the response. The calculated concentration should vary less than 10 percent for the known concentration except at the lower end of the curve. Near the detection limit for each compound, variation may be more due to variation in integration.

The sample system integrity is verified through routine leak checks and determination of the recovery of H_2S through the entire sampling and analysis system. Recovery studies are conducted before and after each 3-hour run to ensure that at least 80 percent of the H_2S introduced at the probe tip is recovered at the GC. All source concentrations are corrected for the lower recovery value.

All rotameters are calibrated with an appropriate soap bubble flowmeter under actual operating conditions. Calibration graphs are prepared for field use. All flows are verified during the testing to ensure that all flows remain constant. The actual, measured flows are used in the calculations.

Pressures and flows are observed continuously and recorded during all testing to ensure uniform operation. Periodic leak checks are performed to ensure system integrity. Any unreasonable results are immediately verified by checking the recovery of a standard gas.

All proceedings are recorded on preprinted data sheets. Daily summaries of the testing are prepared at the end of each day to consolidate the data. The data sheets and all integrator outputs remain on file at ATC for a period of three (3) years after the test.

The gas chromatographic columns and operating conditions are sufficient to obtain separation of all the reduced sulfur compounds. The method has been found to be free of interferences from carbon monoxide, carbon dioxide and hydrocarbons. Sulfur dioxide interference is eliminated by the citrate scrubber at the source. The cold, citrate scrubber eliminates moisture interference by reducing the dew point of the gas to less than $4^{o}C$ and the recovery studies correct the sample concentrations to dry conditions.

The response of a flame photometric detector (FPD)may be affected by methane (CH_4), carbon monoxide (CO) or carbon dioxide (CO_2). Because CH_4 and CO are normally present in emission sources at concentrations less than 200 ppm and because both compounds respond on the analytical GC column in the same way as CO_2, it is not necessary to check for interference from each. It is, however, important to demonstrate that CO_2 does not affect the instrument response to the reduced sulfur compounds because CO_2 is present in many emission sources at high concentrations (up to approximately 20 percent).

The ATC TRS analytical system was evaluated to document the lack of interference by CO_2 and to document the recovery of hydrogen sulfide, carbonyl sulfide, and carbon disulfide through the Teflon impingers containing the citrate buffer solution. The gas chromatograph valving, timing and operation of the system was identical to that described by the

ATC methods. The instrument conditions shown on Figure 3 were used during the experiment, and the chromatogram on that page shows the separation of CO_2 and H_2S.

To document the recovery of H_2S, COS, and CS_2, gravimetrically certified permeation devices were used to generate known concentration standards which were purged through the citrate buffer solution. Samples were analyzed at the inlet and at the outlet of the Teflon impinger containing the citrate buffer.

Three successive injections at the inlet gave the following peak areas (all multiplied by 10^5 uv-sec):

	H_2S	COS	CS_2
Area 1	3.59	3.05	1.69
Area 2	3.46	2.96	1.52
Area 3	3.51	2.90	----
Mean Area	3.52	2.97	1.61
Calculated Slope	1.89	1.94	1.68
Y-intercept	1.55×10^4	1.58×10^4	1.17×10^5
Recovery Gas Concentration, ppm	5.2	4.5	1.2

Three successive injections at the outlet gave the following peak areas (all multiplied by 10^5 uv-sec).

	H_2S	COS	CS_2
Area 1	2.80	2.63	1.37
Area 2	2.78	2.57	1.07
Area 3	2.61	2.41	1.44
Mean Area	2.73	2.54	1.29
Calculated Slope	1.89	1.94	1.68
Y-intercept	1.55×10^4	1.58×10^4	1.17×10^5
Recovery Gas Concentration, ppm	4.6	4.2	1.1

Recoveries for H_2S, COS, and CS_2 were found to be 88, 93 and 92 percent, respectively. H_2S recovery checks are performed before and after each three-hour sample run, and the data is corrected to this recovery factor. It is concluded that because COS and CS_2 recoveries are greater than H_2S recovery no additional correction need be applied to the source data.

Because CO_2 elutes from the column before H_2S, the only reduced sulfur compound that could be affected by CO_2 in the gas is H_2S. To demonstrate a lack of interference, a gravimetrically certified H_2S permeation device was used to generate a known concentration of H_2S in nitrogen and then the same concentration was generated in 16 percent CO_2 and 84 percent nitrogen. Both samples were analyzed repetitively to compare the response of H_2S in the presence of CO_2.

INSTRUMENT DATA

CLIENT ATC, Inc. ATC PROJECT NO. None

SOURCE All reduced sulfur testing DATE 12-22-86

GAS PRESSURE/FLOW		TEMPERATURE	COLUMNS
H_2: 30/30	42 ccm	TRAILER: 76°F	SAMPLE LOOP: 3" unlined
AIR: 20/20	106 ccm	DETECTOR: 115°C	BHT: 1/8" x 6'
N_2-1: 60/30	31 ccm	COLUMN: 70°C	PPE: 1/8" x 16"
N_2-2:			

TIMER PROGRAM

EVENT	1	2	3	4
PROGRAM	1	2	3	4
CIRCUIT	1	2	3	4
ON (min)	0	1	1	5
ON (sec)	03	40	50	30
VARY (min)	6.00	6.00	6.00	6.00
OFF (min)	0	1	1	5
OFF (sec)	05	43	53	32
VARY (min)	6.00	6.00	6.00	6.00

REMARKS

CO_2 and H_2S Separation

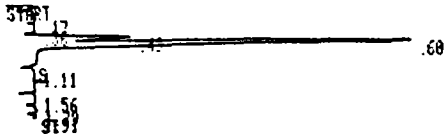

RT	Cmpd
0.49	CO_2
0.60	H_2S

INTEGRATOR PROGRAM

```
LIST: METH @

RUN PRMTRS
ZERO   =  10
ATT 2↑ =  0
CHT SP =  1.0
PK WD  =  0.04
THRSH  =  0
AR REJ =  5000

RPRT OPTNS
  2. RF UNC PKS=      0.0000E+00
  3. MUL FACTOR=      1.0000E+00
  4. PK HEIGHT MODE      NO
  5. EXTEND RT           NO
  6. RPRT UNC PKS        NO

TIME TBL
   0.00 INTG # =  9
   0.50 INTG # = -9
   1.55 INTG # =  9
   2.50 INTG # =  6
   2.70 INTG # = -9
   3.40 INTG # =  6
   4.80 INTG # =  9
   5.60 STOP

CALIB TBL
EMPTY
```

Page _____ of _____

TAR-03-9/84 ATC APPLIED TECHNOLOGY CONSULTANTS

FIGURE 3 INSTRUMENT CONDITIONS USED AND CHROMATOGRAPH OBTAINED DURING INTERFERENCE STUDIES

Five successive injections of 8.15 ppm H_2S in nitrogen gave the following peak areas (all multiplied by 10^5 uv-sec):

2.664	2.627	
2.636	2.617	Mean = 2.616
2.611		Std Dev - 0.021

Five successive injections of 8.15 ppm H_2S in 16 percent CO_2, 84 percent nitrogen gave the following peak areas (all multiplied by 10^5 uv-sec):

2.608	2.611	
2.633	2.601	Mean = 2.616
2.627		Std Dev = 0.013

The 0.57 percent decrease in response (equivalent to 0.3 percent concentration) between the two samples is not significant at the 95 percent confidence level. It is, therefore, concluded that the FPD response to H_2S is unaffected by CO_2 at the concentrations normally measured in emission sources.

WILMINGTON REGIONAL OFFICE
DEM

ENTROPY ENVIRONMENTALISTS, INC.

SPECIALISTS IN AIR POLLUTION MEASUREMENT & MANAGEMENT

STATIONARY SOURCE SAMPLING REPORT

This Report was Reviewed
by: _____
Date: 12/21/83
and found to be
Satisfactory: ☑
Unsatisfactory: ☐
Remarks: _____

KOCH SULFUR PRODUCTS, INC.

WILMINGTON, NORTH CAROLINA

SULFUR OXIDES EMISSIONS COMPLIANCE TESTING

UNIT #2 STACK

FEB 11 1983
WILMINGTON REGIONAL OFFICE
DEM

JANUARY 27, 1983

P.O. Box 12291, Research Triangle Park, North Carolina 27709
Phone 919-781-3550

DIVISION OF ENVIRONMENTAL MANAGEMENT
Air Quality Section

December 21, 1983

M E M O R A N D U M

TO: Chuck Wakild

ATTN: Wayne Cook

FROM: Jule Shanklin

SUBJECT: SOURCE TEST REPORT REVIEW
Koch Sulfur Products, Inc.
SULFURIC ACID PLANTS 1&2
Wilmington, NC (Pender Co.)

REF: (A) NCAC 2D .0517
(B) "A New Approach to Production Rate Measurement in Sulfuric Acid Plants", Pollution Engineering, Nov '83, pp. 38 & 57
(C) NC DEM Air Permit 1853R5

The subject reports for the 1/26&27/83 tests performed by Entropy Environmentalists have been reviewed and found acceptable. Note that the Testor analyzed the H_2SO_4 and SO_3 components from the front half separately; therefore, I have combined the two results as shown in the summary to more closely represent results obtained by "standard" Method 8 recoveries. As shown in the summary, marginal compliance was demonstrated for the 2 plants. As an additional check, I calculated emissions using techniques explained in Reference (B) and got identical values (to 2 decimal places).

Unit-Date	Production T/hr	Emissions Pollutant	lb/hr	lb/T	Limit lb/T (Ref. A)
1- 1/26/83 (5.65 T/hr rating)	4.7	SO_2	126.9	26.95(24.5)*	27
		H_2SO_4	0.577	0.122	0.5
		$H_2SO_4+SO_3$	0.592	0.1253	0.5
2- 1/27/83 (3.75 T/hr)	3.125	SO_2	80.36	25.72(24.5)*	27
		H_2SO_4	0.13	0.042	0.5
		$H_2SO_4+SO_3$	0.158	0.051	0.5

*As figured by "S-factor" Method (Ref. B)

/la

cc: Dennis Ramsey

DIVISION OF ENVIRONMENTAL MANAGEMENT

February 21, 1983

MEMORANDUM

TO: Michael Y. Aldridge

FROM: Arthur Smoot AFS

SUBJECT: Koch Sulfur Products, Acid
#2 Acid Plant Source Test
Premise #00118
New Hanover County

Enclosed is the report on the stack test performed on Koch #2 Acid (Sulfuric) Plant January 27, 1983 and related AQ-16 and AQ-92. Please review and transmit your findings and conclusions to the Wilmington Regional Field Office.

cfp

Enclosure

cc: Wilmington Regional Office
Central Files

DISTRIBUTION

Yellow Copy - Mon. Mgt./Central Files
Blue Copy - Regional Office
(Optional) White Copy - Permits
Enforcement
Stack Test

NORTH CAROLINA DIVISION OF ENVIRONMENTAL MANAGEMENT
AIR QUALITY REPORT

REQUEST FOR ACTION TO BE TAKEN

The item listed below requires action to ascertain compliance under Article 21, Chapter 143 of the General Statutes of North Carolina, concerning rules and regulations governing the control of air pollution:

Name	Address	County
Koch Sulfur	US 421 N. Wilmington	New Hanover

Subject

Source test, Al(p) source inspection

Investigation Requested By	Address	County
Koch Sulfur		

Remarks

Assigned To		Date
Wilmington Regional Office		2/16/83
Investigated By	**Date**	**Returned**
Arthur Smoot	1/27/83	2/18/83

Action Recommended

Inspect by schedule

Investigation Report

Contacted Bill Edd of Koch Sulfur and Willis Nesbit of Entropy Environmentalist, Inc. Acid plant #2 was tested 1/27/83. In the interval between runs the Sulfate plant was inspected. None of the equipment listed in permit #4548R2 was in use as the plant is shut down. Mr. Edd said the corporate decision about the future of this plant has not yet been made. The stack test of acid plant #2 ran without incidents.

Correspondence To: _____

Signature: Arthur H. Smoot

AQ-16 Revised November 29, 1979

SOURCE TEST
OBSERVERS CHECKLIST

N. C. Division of Environmental Management

Source Name:	Koch Sulfur	Testing Firm:	Entropy Environmentalists
Address:		Address:	P.O. Box 12291 Research Triangle Park
Plant Location:	U.S. 421, NC	Phone:	919-781-3550
Source Contact:	Bill Edd	Test Engineer:	Willis Nisbet
Phone:		Assistant:	Steve Turle

Other Personnel Involed	Affiliation

Process Description: H_2SO_4 manufacture, plant #2

Process Rate During Test: 80 tons/day

Maximum Process Rate: 80 tons/day

Burner Sizes (Incinerators) Pri: Sec:

TEST PARAMETERS

Duct Size:	36"	Pollutant Sampled:	SO_2, H_2SO_4
Distance Before Ports:	11 ft	E. P. A. Method No.:	8
Distance After Ports:	19 ft	If method differs from E. P. A. method, explain:	
Number of Test Points:	40		
Number of Runs:	3		
Sampling Time Per Run (min.):	80	For Method 5 sampling train record $\Delta H_@$	

	Run #1	Run #2	Run #3
Leakage Rate (ft^3/min.) (0.02 ft^3/min. or less)	0.000	0.000	0.000
Time Started (24 hr. Clock)	8:26	10:29	12:03
Time Ended	9:55	11:53	13:29
Test Date(s)	1/27/82	1/27/82	1/27/82

See Graph on Reverse Side For Number of Test Points. Use Reverse Side for Comments.

Request 2 copies of Report

OBSERVERS SIGNATURE

REPORT CERTIFICATION

The sampling and analysis performed for this report was carried out under my direction and supervision.

Date February 3, 1983 Signature Willis S. Nesbit

Willis S. Nesbit

I have reviewed all testing details and results in this test report and hereby certify that the test report is authentic and accurate.

Date February 3, 1983 Signature D. James Grove

D. James Grove, P. E.

TABLE OF CONTENTS

SECTION	PAGE
INTRODUCTION	1
SUMMARY OF RESULTS	2
PROCESS DESCRIPTION AND OPERATION	4
SAMPLING AND ANALYTICAL PROCEDURES	6
APPENDICES	9

A - Sulfur Oxides Test Results with Example Calculations

B - Field and Analytical Data

C - Test Participants

D - Sampling and Analytical Procedures

E - Calibration Data

5.17 Sulfuric Acid

ZINC CORPORATION OF AMERICA
300 FRANKFORT ROAD MONACA, PA 15061-2295 (412) 774-1020

June 15, 1992

VIA FEDERAL EXPRESS

Pacific Environmental Services
3708 Mayfair Street
Suite 202
Durham, NC 27707

Attention: Mr. Dexter Russell

Re: ZCA's Monaca and Bartlesville Acid Manufacturing Facilities

Gentlemen:

In a letter from EPA's Ron Meyers, Zinc Corporation of America (ZCA) was asked to help EPA update and revise AP-42 by providing data on the company's sulfuric acid production facilities in Monaca, PA and Bartlesville, OK.

Zinc Corporation of America is the largest integrated U.S. producer of zinc metal and the world's largest producer of value added zinc products. ZCA operates a zinc smelter in Monaca, PA and a zinc refinery in Bartlesville, OK. Both of these facilities manufacture sulfuric acid from sulfur dioxide gas generated while roasting zinc concentrate (ZnS) using the Monsanto contact process.

Sulfur Acid Production

Sulfur dioxide-containing gases from the roaster pass through a waste heat boiler (Monaca only), cyclones and electrostatic precipitators and then through an acid plant gas purification system. These latter systems prepare the sulfur dioxide for conversion to sulfuric acid by scrubbing with weak sulfuric acid, removing sulfuric acid mist by electrostatic precipitation, and dehumidifying by scrubbing with concentrated sulfuric acid. The clean roaster gases will contain about 5-7 percent sulfur dioxide. These gases are heated to 400-450°C and passed through a series of beds containing vanadium pentoxide catalyst. This catalyst oxidizes the sulfur dioxide to sulfur trioxide. The sulfur trioxide gas then passes through an absorption tower in which circulates 98.5% sulfuric acid. This strong sulfuric acid absorbs the sulfur trioxide. Run-off from the absorber tower passes to the drying tower where the water contained in the incoming roaster gas provides most of the water necessary to produce standard 66° Baume sulfuric acid (93.19% H_2SO_4).

Table 1 provides a summary of specification for both the Monaca and Bartlesville acid plants.

TABLE 1

ACID UNIT SPECIFICATIONS

	MONACA	BARTLESVILLE
Process	Double Contact	Single Contact
Catalyst	V_2O_5	V_2O_5
Manufacturer	Monsanto-Enviro-Chem	Monsanto-Enviro-Chem
Acid Unit Capacity	300T/Day 12.5 tph	226 9.42 tph
(Average Daily Production)	272 Tons/Day[2,3] 11.33 tph	214 Tons/Day[2,3] 8.92 tph
Primary Converter	3 pass	4 pass
Secondary	2 pass with Sulfur Burner	N/A
Average Volume	17600 SCFM	19,100 SCFM
Average 1991 Emissions		
Sulfur Dioxide	348 ppm[1]	1150 ppm[1]
	56 lbs/hour	218 lbs/hour
Emission Factors		
Sulfur Dioxide	4.9 lbs. SO_2/Ton of H_2SO_4	24.4 lbs. SO_2/Ton of H_2SO_4

1. Annual average SO_2 concentrations based upon hourly average continuous emission monitoring data from 1991.

2. Tons of 100% H_2SO_4.

3. Includes H_2SO_4 produced from burning sulfur as fuel.

Neither the Monaca nor the Bartlesville facility has conducted recent EPA Method 8 tests on acid plant off gases.

The calibration of the continuous emission monitors at both facilities is checked routinely. Attachment 1 provides the most recent calibration test of the Monaca acid unit.

Please contact me at 412/774-1020 if you have any questions about this data.

Sincerely,

James D. Reese

James D. Reese, P.E.
Director, Environmental Affairs

JDR/jo

Attachments

ATTACHMENT 1

CMC ANALYTICAL, INC.
A DIVISION OF ENVIRONMENTAL MONITORING CONTRACTORS INC.

215 E. HIGGINS RD., BOX 149
GILBERTS, IL 60136
PHONE (708) 426-3331
FAX (708) 426-1961

CONTINUOUS EMISSION MONITOR

RELATIVE ACCURACY AUDIT

PERFORMED FOR

ZINC CORPORATION OF AMERICA

MONACA FACILITIES
POWER PLANT UNITS 1 and 2, ACID PLANT
MONACA, PENNSYLVANIA
MAY 28 through 30, 1991

UNIT	POLLUTANT	MANUFACTURER	SERIAL NO
BOILER 1	SO_2	LEAR SIEGLER	0261060V
BOILER 1	O_2	LEAR SIEGLER	260069
BOILER 1	OPACITY	LEAR SIEGLER	15403558
BOILER 2	SO_2	LEAR SIEGLER	0261061V
BOILER 2	O_2	LEAR SIEGLER	260070
BOILER 2	OPACITY	LEAR SIEGLER	154035717
ACID PLANT	SO_2	DUPONT	4464400464

Date Submitted: September 16,1991

RESULTS SUMMARIES

POWER PLANT UNIT NO. 1

Test No.	Time	SO_2 ppm RM	CEM	di	SO_2 lbs/10^6 Btu RM	CEM	di
1	1033-1133	231.8	234.05	2.25	0.530	0.61	0.080
2	1145-1245	242.4	230.35	-12.05	0.555	0.61	0.055
3	1300-1400	276.4	305.20	28.80	0.632	0.71	0.078

Standard Deviation	0.0139
Confidence coefficient	0.0345
Relative Accuracy	18.5

POWER PLANT UNIT NO. 2

Test No.	Time	SO_2 ppm RM	CEM	di	SO_2 lbs/10^6 Btu RM	CEM	di
1	1455-1555	340.9	331.93	- 8.97	0.845	0.80	-0.045
2	1603-1703	353.8	344.75	- 9.05	0.874	0.81	-0.064
3	1711-1811	353.5	339.98	-13.52	0.874	0.81	-0.064

Standard Deviation	0.01097
Confidence coefficient	0.0273
Relative Accuracy	9.83

ACID PLANT

Test No.	Time	SO_2 ppm RM	CEM	di
1	0928-1038	324.1	319.3	- 4.8
2	1056-1156	385.7	372.7	-13.0
3	1240-1340	288.5	278.3	-10.2

Standard Deviation	4.17
Confidence coefficient	10.355
Relative Accuracy	5.91

Zinc Corporation of America
Monaca Facilities
Powerhouse

OPACITY SUMMARY

	Test NO.	Time	Ave. Opacity %
5-28-91	1	1420-1435	4.67
	2	1436-1451	5.42
	3	1452-1507	4.92
5-29-91	4	1130-1145	5.08
	5	1146-1200	5.00
	6	1201-1215	5.00
5-30-91	7	1142-1157	6.00
	8	1158-1213	5.00
	9	1214-1229	6.18

ACID PLANT

	Test No.	Time	SO_2 ppm
5-30-91	1	0928-1028	324.1
	2	1056-1156	385.7
	3	1240-1340	288.5

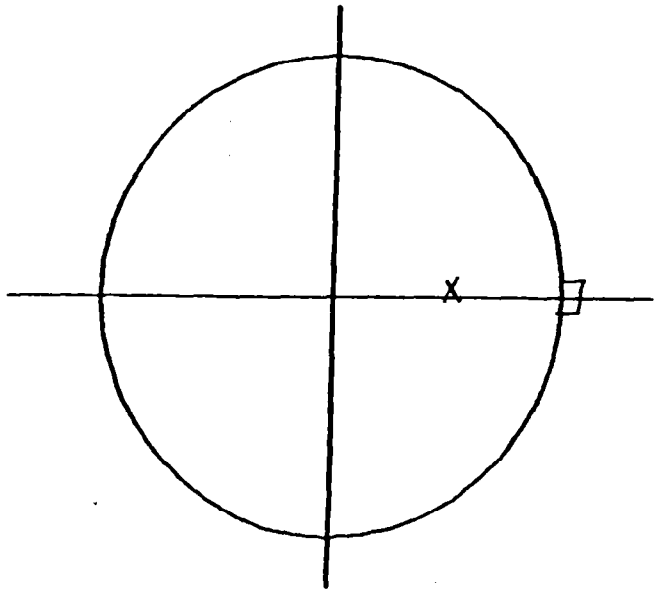

PERCENT OF STACK DIAMETER FROM INSIDE WALL TO TRAVERSE POINT								TRAVERSE POINT NUMBER
.	.	.	.	.	.	.	1.6	16
.	.	.	.	.	.	.	4.9	15
.	.	.	.	.	.	1.8	8.5	14
.	.	.	.	.	.	5.7	12.5	13
.	.	.	.	.	2.1	9.9	16.9	12
.	.	.	.	.	6.7	14.6	22.0	11
.	.	.	.	2.5	11.8	20.1	28.3	10
.	.	.	.	8.2	17.7	26.9	37.5	9
.	.	.	3.3	14.6	25.0	36.6	62.5	8
.	.	.	10.5	22.6	35.5	63.4	71.7	7
.	.	4.4	19.4	34.2	64.5	73.1	78.0	6
.	.	14.7	32.3	65.8	75.0	79.9	83.1	5
.	6.7	29.5	67.7	77.4	82.3	85.4	87.5	4
.	25.0	70.5	80.6	85.4	88.2	90.1	91.5	3
14.6	75.0	85.3	89.5	91.8	93.3	94.3	95.1	2
85.4	93.3	95.6	96.7	97.5	97.9	98.2	98.4	1
2	4	6	8	10	12	14	16	

NUMBER OF TRAVERSE POINTS ON A DIAMETER

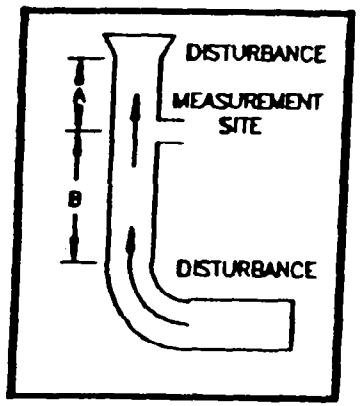

CEM

JOB: ZCA - MONACA #: 10901

DATE: 5-30-91 TEST NO: ALL

DUCT NO: ACID PLANT

DUCT DIA: FT. INS.

DUCT AREA: FT

NO. POINTS ACROSS DIA.:

A: FT

B: FT.

EMC Inc.

EQUAL AREA TRAVERSE FOR ROUND DUCTS

DWN BY:	EC	11/19/90	
CHK BY:	GG	11/19/90	
DWG # TRAVERSE.DWG			REV 0

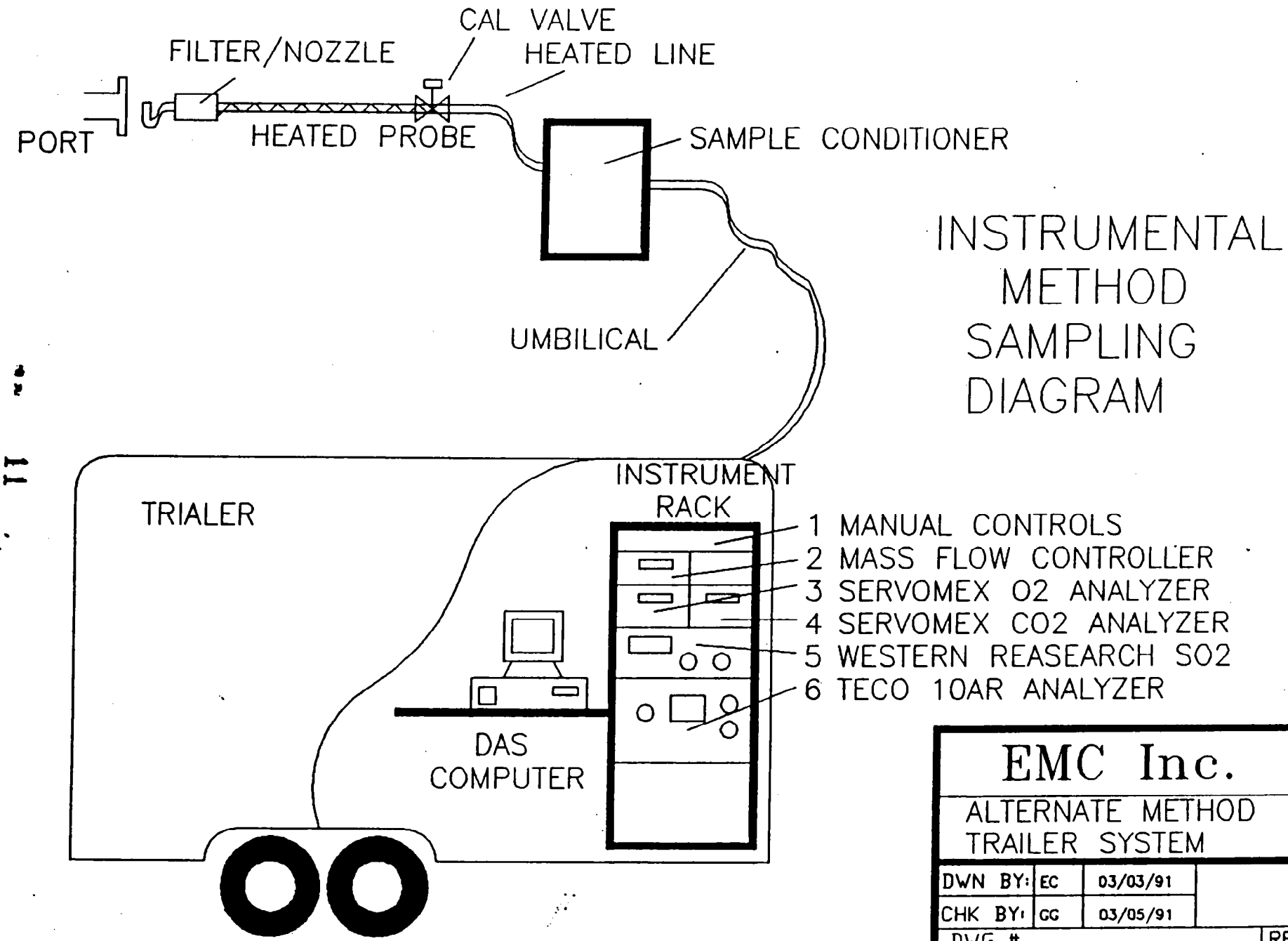

INSTRUMENTAL METHOD SAMPLING DIAGRAM

EMC Inc.			
ALTERNATE METHOD TRAILER SYSTEM			
DWN BY:	EC	03/03/91	
CHK BY:	GG	03/05/91	
DWG # ALTMETH.DWG			REV

ZINC CORPORATION OF AMERICA - Monaca Facilities
Acid Plant
5-30-91
Test No. 1

	01	02	03	05	06	07	08	09	10
CHAN	SO2	SO2	NOX	CO2	O2	CO	NONE	NONE	NONE
UNITS	PPM	PPM	PPM	%	%	PPM	NONE	NONE	NONE
FSCL	500	3000	500	20	25	1000	1.000	1.000	1.000
ZERO	0	0	0	0	0	0	0.000	0.000	0.000
09:28	326								
09:29	329								
09:30	328								
09:31	330								
09:32	326								
09:33	325								
09:34	322								
09:35	321								
09:36	320								
09:37	322								
09:38	325								
09:39	323								
09:40	327								
09:41	330								
09:42	333								
09:43	335								
09:44	330								
09:45	329								
09:46	327								
09:47	326								
09:48	327								
09:49	325								
09:50	326								
09:51	328								
09:52	329								
09:53	330								
09:54	330								
09:55	331								
09:56	327								
09:57	327								
09:58	325								

ZINC CORPORATION OF AMERICA - Monaca Facilities
ACID PLANT
5-30-91
Test No. 1 (continued)

	01	02	03	05	06	07	08	09	10
CHAN	SO2	SO2	NOX	CO2	O2	CO	NONE	NONE	NONE
UNITS	PPM	PPM	PPM	%	%	PPM	NONE	NONE	NONE
FSCL	500	3000	500	20	25	1000	1.000	1.000	1.000
ZERO	0	0	0	0	0	0	0.000	0.000	0.000

09:59	320
10:00	326
10:01	322
10:02	324
10:03	322
10:04	323
10:05	325
10:06	320
10:07	323
10:08	318
10:09	318
10:10	320
10:11	322
10:12	322
10:13	325
10:14	320
10:15	323
10:16	319
10:17	317
10:18	320
10:19	321
10:20	321
10:21	323
10:22	320
10:23	319
10:24	318
10:25	317
10:26	320
10:27	325
10:28	327

324 /

ZINC CORPORATION OF AMERICA - Monaca Facilities
ACID PLANT
5-30-91
Test No. 2

	01	02	03	05	06	07	08	09	10
CHAN	SO2	SO2	NOX	CO2	O2	CO	NONE	NONE	NONE
UNITS	PPM	PPM	PPM	%	%	PPM	NONE	NONE	NONE
FSCL	500	3000	500	20	25	1000	1.000	1.000	1.000
ZERO	0	0	0	0	0	0	0.000	0.000	0.000
10:56	378								
10:57	380								
10:58	380								
10:59	385								
11:00	385								
11:01	383								
11:02	382								
11:03	383								
11:04	385								
11:05	390								
11:06	390								
11:07	388								
11:08	387								
11:09	390								
11:10	391								
11:11	388								
11:12	390								
11:13	391								
11:14	388								
11:15	385								
11:16	383								
11:17	385								
11:18	388								
11:19	390								
11:20	390								
11:21	390								
11:22	399								
11:23	395								
11:24	393								
11:25	395								
11:26	391								

ZINC CORPORATION OF AMERICA - Monaca Facilities
ACID PLANT
5-30-91
Test No. 2 (continued)

	01	02	03	05	06	07	08	09	10
CHAN	SO2	SO2	NOX	CO2	O2	CO	NONE	NONE	NONE
UNITS	PPM	PPM	PPM	%	%	PPM	NONE	NONE	NONE
FSCL	500	3000	500	20	25	1000	1.000	1.000	1.000
ZERO	0	0	0	0	0	0	0.000	0.000	0.000

11:27	393
11:28	390
11:29	388
11:30	390
11:31	391
11:32	388
11:33	385
11:34	380
11:35	379
11:36	376
11:37	377
11:38	381
11:39	379
11:40	381
11:41	383
11:42	382
11:43	380
11:44	380
11:45	382
11:46	384
11:47	387
11:48	385
11:49	385
11:50	385
11:51	387
11:52	383
11:53	385
11:54	382
11:56	379
11:56	381

385.7

ZINC CORPORATION OF AMERICA - Monaca Facilities
Acid Plant
5/30/91
Test No. 3

	01	02	03	05	06	07	08	09	10
CHAN	SO2	SO2	NOX	CO2	O2	CO	NONE	NONE	NONE
UNITS	PPM	PPM	PPM	%	%	PPM	NONE	NONE	NONE
FSCL	500	3000	500	20	25	1000	1.000	1.000	1.000
ZERO	0	0	0	0	0	0	0.000	0.000	0.000

12:40	259
12:41	252
12:42	245
12:43	238
12:44	229
12:45	221
12:46	213
12:47	206
12:48	199
12:49	193
12:50	187
12:51	180
12:52	176
12:53	171
12:54	167
12:55	163
12:56	159
12:57	156
12:58	153
12:59	151
13:00	150
13:01	154
13:02	172
13:03	202
13:04	235
13:05	263
13:06	282
13:07	295
13:08	302
13:09	305
13:10	308

ZINC CORPORATION OF AMERICA - Monaca Facilities
Acid Plant
5-30-91
Test No. 3 (continued)

	01	02	03	05	06	07	08	09	10
CHAN	SO2	SO2	NOX	CO2	O2	CO	NONE	NONE	NONE
UNITS	PPM	PPM	PPM	%	%	PPM	NONE	NONE	NONE
FSCL	500	3000	500	20	25	1000	1.000	1.000	1.000
ZERO	0	0	0	0	0	0	0.000	0.000	0.000
13:11	305								
13:12	304								
13:13	307								
13:14	321								
13:15	329								
13:16	335								
13:17	341								
13:18	346								
13:19	351								
13:20	356								
13:21	362								
13:22	367								
13:23	371								
13:24	372								
13:25	377								
13:26	380								
13:27	382								
13:28	388								
13:29	396								
13:30	396								
13:31	392								
13:32	387								
13:33	386								
13:34	387								
13:35	391								
13:36	394								
13:37	396								
13:38	399								
13:39	399								
13:40	397								

298.5

SOURCE IDENTIFICATION: ZCA - ACID PLANT DATE: 5-30-91

RUN: ALL OPERATOR: G Gorzi

SPAN: SO_2 0-500 ppm

CALIBRATION SUMMARY

	Identification	Time	Cylinder Value (Units)	Analyzer Response (Units)	Diff (% of Span)	Drift (% of Span)
	Zero Gas		0	0		
SO_2	Mid		271.6	272		
	High		425.9	426		
	Zero Gas					
	Mid					
	High					
post 1	Zero Gas	1045	0	1		
SO_2	Mid	1041	271.6	272		
	High					
	Zero Gas					
	Mid					
	High					
post 2	Zero Gas	1203	0	1		
SO_2	Mid	1159	271.6	273		
	High					
	Zero Gas					
	Mid					
	High					
post 3	Zero Gas	1370	0	1		
SO_2	Mid	1347	271.6	273		
	High	1344	425.9	427		
	Zero Gas					
	Mid					
	High					

$$\text{DRIFT} = \frac{\text{Final Test Cal} - \text{Initial Test Cal}}{\text{Span 100}} \times 100$$

EMC performs all calibrations through the complete sampling system and, therefore, no sample system bias exists and none is applied to the results.

SOURCEID.FRM(02-SPECIAL)

?

8.10

Wright Chemical Corp.
Riegelwood NC
(919) 655 2263

Dec

Dan Dettman

NC0084

(1.) Is this a contact sulfuric acid process?

(YES) NO

✓ 2. Daily (maximum) Capacity 240 tons/day

(3). Principal Raw Materials

✓ Elemental Sulfur

___ Spent acid and/or acid sludge No

___ Copper smelter gas No

___ Other(s) specify:

(4) End Products (concentration)

98 % Sulfuric Acid → 93 - 20%

___ % Oleum

5. Emission control devices in use:

___ Vertical panel mist eliminator

___ Horizontal dual pad mist eliminator

X Vertical tube mist eliminator Candlestick

___ Other(s) specify:

✓ 6. Production rate at date/time of testing

3/13/91 9:00 AM to 2:00 PM

218.0 tons/day

(7.) Year plant built 1963

DIVISION OF ENVIRONMENTAL MANAGEMENT

Air Quality Section

May 9, 1990

M E M O R A N D U M

To: Wayne Cook

From: Shannon M. Vogel SMV

Subject: Wright Chemical Corporation
Riegelwood, Columbus County, North Carolina
Sulfur Dioxide and Sulfuric Acid Mist Emissions Testing of a Sulfuric Acid Plant on April 10, 1990
Conducted by Pace Laboratories, Inc.

A report of the subject testing has been reviewed and is found to be acceptable. The results appear reliable and demonstrate that compliance with the applicable emissions standard was achieved during the test period.

The emissions standard that applies to the test facility is 15A NCAC 2D .0517, Emissions From Plants Producing Sulfuric Acid, which limits sulfur dioxide to 27 pounds per ton of sulfuric acid produced and limits sulfuric acid mist to 0.5 pounds per ton of sulfuric acid produced.

The maximum production rate stated in permit No. 1394R9 is 240 tons of sulfuric acid per day. During the test period the sulfuric acid plant was producing 218.0 tons per 24 hour period or 9.08 pounds per hour. The average sulfur dioxide emission rate demonstrated by the test results was 25.X pounds per ton of sulfuric acid produced. The average sulfuric acid mist emission rate demonstrated by the test results was 0.08 pounds per ton of sulfuric acid produced.

Compliance was demonstrated.

cc: Central File by way of Earl McCune
Michael Aldridge

pace. laboratories, Inc.

RECEIVED
APR 20 1990
Wilmington Regional Office

SOURCE SAMPLING REPORT

FOR

WRIGHT CORPORATION

Sulfuric Acid Plant Stack

Riegelwood, North Carolina

Reviewed by:
PACE, INC.
Charlotte, North Carolina

Paul R. Jenkins, Jr.
April 1990

Performed by:
PACE, INC.
Charlotte, North Carolina

Richard B. McCain, III
April 1990

pace. laboratories, Inc.

TABLE OF CONTENTS

INTRODUCTION 1

SUMMARY OF RESULTS 3

PROCESS DESCRIPTION 5

LOCATION OF SAMPLING POINTS 6

SAMPLING AND ANALYTICAL PROCEDURES 8

APPENDICES 9

- A. Summary of Results
- B. Field Data
- C. Analytical Data
- D. Process Data
- E. Test Participants
- F. Sampling and Analytical Procedures
- G. Calibration Data

INTRODUCTION

Source sampling was performed on the sulfuric acid plant stack at Wright Corporation, Riegelwood, North Carolina on April 10, 1990. The purpose of the sampling was to determine compliance with the permit limitations as required by the North Carolina Department of Environment, Health, and Natural Resources (N.C. DEHNR). Sampling locations are shown in Figure 1.

The measurements of stack gas flow rate and pollutant concentrations were made according to U.S. Environmental Protection Agency and the N.C. DEHNR. Mr. Michael Aldridge, N.C. DEHNR, and Ms. Shannon Vogel, N.C. DEHNR, were present to observe the test proceedings.

The following sections of the report detail the summary of results, the process and its operation, the location of the sampling points and the sampling and analytical procedures used.

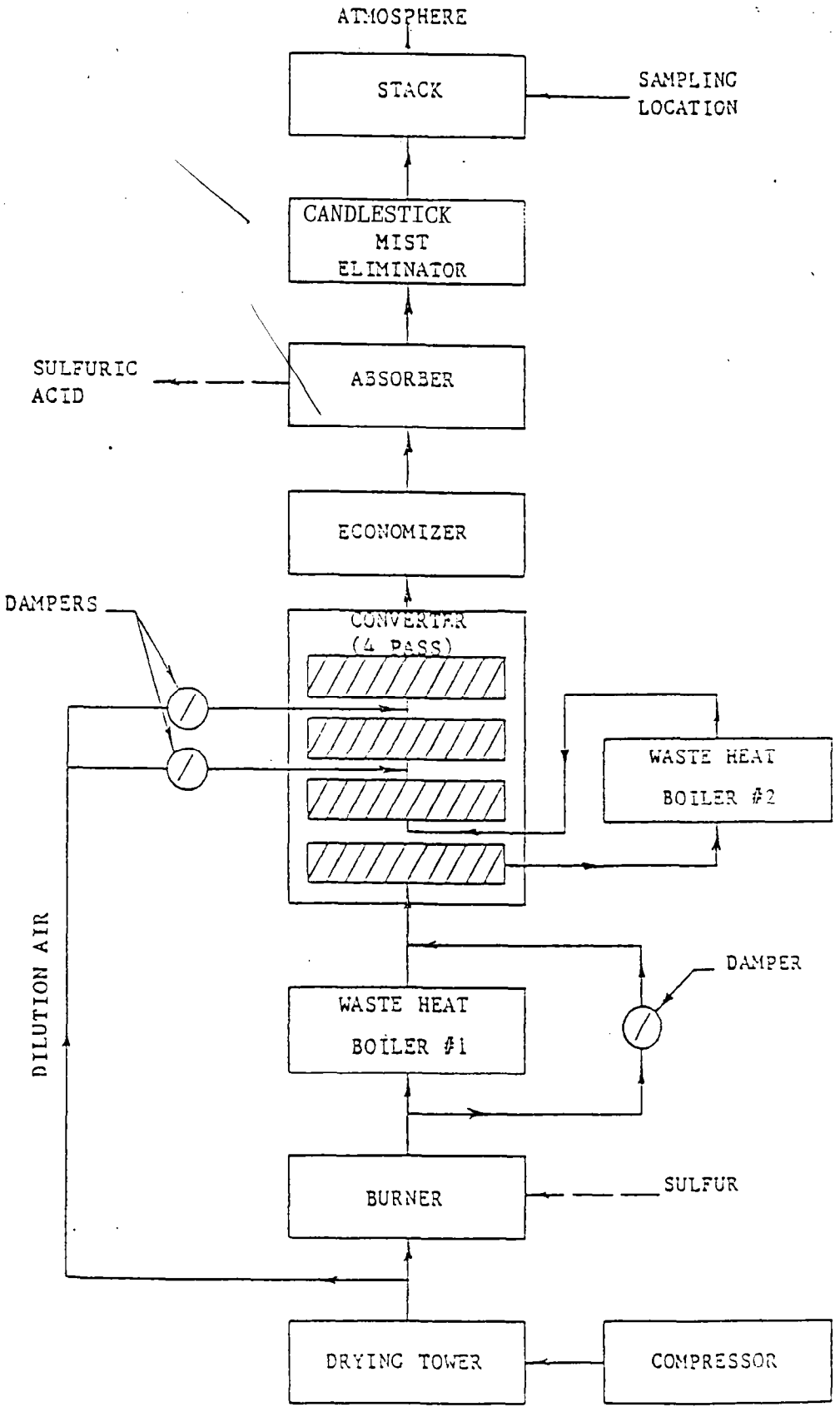

PROCESS FLOW DIAGRAM

FIGURE 1

pace. laboratories, Inc.

SUMMARY OF RESULTS

Tables 1, 2 and 3 present the summary of results from the Isokinetic, sulfur dioxide and sulfuric acid sampling. The mean sulfur dioxide concentration was 0.219 x 10^{-3} pounds per dry standard cubic foot and the mean emission rate was 233.7 pounds per hour. The mean sulfuric acid mist concentration was 0.676 x 10^{-6} pounds per dry standard cubic foot and the mean emission rate was 0.722 pounds per hour.

On April 10, 1990 the sulfuric acid plant produced 218.0 tons of sulfuric acid (100%) in 24 hours, or 9.08 tons per hour. Process data can be found in Appendix C. Therefore, the sulfuric acid plant emitted 25.7 pounds of sulfur dioxide per ton of sulfuric acid produced and 0.080 pounds of sulfuric acid mist per ton of sulfuric acid produced (see calculations in Appendix A).

Based on the results of the sulfur dioxide and sulfuric acid sampling, the sulfuric acid plant at Wright Corporation, Riegelwood, North Carolina was in compliance with the allowable emission rate of 27 pounds of sulfur dioxide per ton of sulfuric acid produced and the allowable emission rate of 0.5 pounds of sulfuric acid mist (expressed as sulfuric acid) per ton of sulfuric acid produced.

pace. laboratories, inc.

TABLE 1

SUMMARY OF RESULTS, SAMPLING PARAMETERS

Run Number	1	2	3
Date	04/10/90	04/10/90	04/10/90
% Isokinetic	103.09	100.70	100.01
Volume of Gas Sampled, SCF * Dry	32.940	33.327	32.675
Stack Gas Flow Rate, SCFM * Dry	17599.4	18009.9	17850.1
Stack Gas Flow Rate, ACFM	20978.8	21613.5	21444.9

TABLE 2

SUMMARY OF RESULTS, METHOD 6 - SULFUR DIOXIDE

Run Number	1	2	3
Date	04/10/90	04/10/90	04/10/90
Concentration, pounds/ SCF * Dry	0.000256	0.000198	0.000203
Emission Rate, lbs/hr	269.9	214.2	217.0

TABLE 3

SUMMARY OF RESULTS, METHOD 8 - SULFURIC ACID MIST

Run Number	1	2	3
Date	04/10/90	04/10/90	04/10/90
Concentration, lbs/ SCF * Dry	0.000000799	0.000000667	0.000000563
Emission Rate, lbs/hr	0.844	0.720	0.602

*68°F, 29.92 in. Hg
**Nozzle, probe, filter

PROCESS DESCRIPTION AND OPERATION

The Wright Corporation, Riegelwood, North Carolina, manufactures sulfuric acid for various industrial uses. The production of sulfuric acid involves the generation of SO_2, its oxidation to SO_3, and the hydration of SO_3 to form sulfuric acid.

Elemental sulfur is melted to remove ash and is fed into a burner along with compressed, moisture free air. In the burner, the air mixes with the liquid sulfur to form SO_2 which then passes to the #1 waste heat boiler. From the #1 boiler, the cooled SO_2 passes to the four pass converter which oxidizes the SO_2 to SO_3. After passing through the first stage, the gases are ducted to the #2 waste heat boiler and back to the converter where it is then ducted through the three remaining stages. The SO_3 exits the converter where it is then ducted through an economizer before entering the absorption tower. In the absorption tower, the SO_3 mixes with H_2O to form H_2SO_4. The exit gases are cleaned in the candlestick mist eliminator before exiting the stack to the atmosphere, as shown in Figure 1.

LOCATION OF SAMPLING POINTS

The dimensions of the stack and the location of the sampling points are shown in Figure 2. The stack cross section was divided into 24 equal areas. The ports were labeled A and B. Each point was sampled for a period of 2.5 minutes per point which yielded a total test time of 60 minutes per run. The number of sampling points was determined by the distance from the last disturbance in the gas flow as outlined in the Code of Federal Regulations, Title 40, Part 60, Appendix A, Method 1.

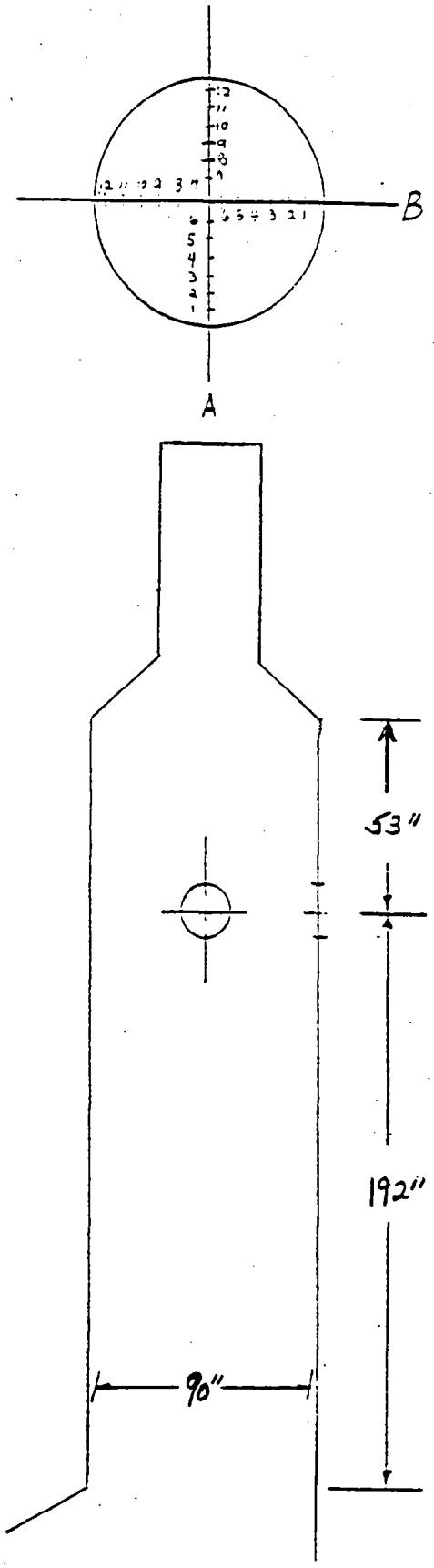

Location of Sampling Ports & Points
Figure 2

SAMPLING AND ANALYTICAL PROCEDURES

All sampling and analytical procedures used were those recommended by the U.S. Environmental Protection Agency and the N.C. DEHNR. Complete details are found in Appendix F which is a copy of the Code of Federal Regulations, Title 40, Part 60, Appendix A, Methods 1 through 4, and Method 8 (July 1, 1988 edition).

Sample point locations and velocity measurements were made by Methods 1 and 2. Gas composition was determined by Fyrite and Method 3 on continuous bag samples. Method 8 was used for the sulfur dioxide and sulfuric acid mist determination.

APPENDICES

pace.
laboratories, Inc.

APPENDIX A

SUMMARY OR RESULTS

pace. laboratories, Inc.

Summary of Method 8 Sampling Parameters

Wright Corporation Riegelwood N.C. Sulfuric Acid Plant Stack

Run Number		1	2	3
Date		4/10/90	4/10/90	4/10/90
DN	Sample nozzle dia., in.	0.496	0.499	0.498
TT	Net time of test	60	60	60
PB	Barometric pressure, in. Hg.	30.34	30.34	30.34
PM	Average orifice pressure drop, in. H2O	1.025	1.095	1.098
VM	Volume of dry gas sampled, cu. ft. at meter conditions	33.61	34.61	33.94
TM	Average gas meter temp. in degrees F.	87.44	97.27	97.40
VMSTD	Volume of dry gas sampled at standard conditions*, SCF	32.940	33.327	32.675
VW	Total water collected in impingers + silica gel, ML.	12.0	17.4	17.5
VMV	Volume of water vapor at standard conditions*, SCF	0.565	0.819	0.824
PMV	Percent moisture by volume	1.687	2.400	2.460
MD	Mole fraction dry gas	0.9831	0.9760	0.9754
PCO2	Percent CO2 by volume, dry	0.00	0.00	0.00
PO2	Percent O2 by volume, dry	20.90	20.90	20.90
PCO	Percent CO by volume, dry	0.00	0.00	0.00
PN2	Percent N2 by volume, dry	79.10	79.10	79.10
MWD	Molecular weight-dry stack gas	28.836	28.836	28.836
MW	Molecular weight-stack gas	28.653	28.576	28.569
CP	Pitot tube coefficient	0.84	0.84	0.84
DPS	Average velocity head of stack gas, inches water	0.1292	0.1330	0.1319
TS	Average stack temperature, F	166.96	166.63	166.92

pace. laboratories, inc.

PSI	Static pressure of stack gas, inches Hg.	-0.012	-0.012	-0.012
PS	Stack pressure, absolute	30.328	30.328	30.328
VS	Average stack velocity, FPM	472.9	487.2	483.4
AS	Stack area, inches sqrd.	6361.7	6361.7	6361.7
QS	Stack flow rate, dry, standard conditions, DSCFM	17599.4	18009.9	17850.1
QSW	Stack flow rate, wet, standard conditions, WSCFM	17901.3	18452.7	18300.2
QA	Actual stack flow rate, ACFM	20978.8	21613.5	21444.9
PERI	Percent isokinetic	103.09	100.70	100.01
FNP	Net sampling points	24	24	24

*68 Degrees F. 29.92 Inches Hg.

pace. laboratories, Inc.

Method 8 Sampling Calculations Test Number 1

Wright Corporation Riegelwood N.C. Sulfuric Acid Plant Stack

Volume of Dry Gas Sampled at Standard Conditions

$$VMSTD = \frac{17.64 * VM * (PB + PM / 13.6)}{TM + 460} = 32.940$$

Volume of Water Vapor at Standard Conditions

$$VMV = 0.04709 * VW = 0.565$$

Percent Moisture in Stack Gas

$$PMV = \frac{100 * VMV}{VMSTD + VMV} = 1.687$$

Mole Fraction of Dry Gas

$$MD = \frac{100 - PMV}{100} = 0.9831$$

Average Molecular Weight of Dry Stack Gas

$$MWD = 0.44 * PCO2 + 0.32 * PO2 + 0.28 * (PN2+PCO) = 28.836$$

Molecular Weight of Stack Gas

$$MW = MWD * MD + 18 * (1-MD) = 28.653$$

Stack Gas Velocity at Stack Conditions

$$VS = 5129.4 * CP * DPS * SQRT(TS + 460)/(PS * MW) = 472.9$$

Stack Gas Volumetric Flow at Standard Conditions, Dry

$$QS = \frac{0.123 * VS * AS * PS * MD}{TS + 460} = 17599.4$$

Stack Gas Volumetric Flow at Stack Conditions

$$QA = \frac{QS * (TS + 460)}{17.64 * PS * MD} = 20978.8$$

Percent Isokinetic

$$PERI = \frac{1039 * (TS + 460) * VMSTD}{VS * TT * PS * MD * DN * DN} = 103.09$$

pace. laboratories, inc.

METHOD 6
SULFUR DIOXIDE CALCULATION FORM

Wright Corporation Riegelwood N.C. Sulfuric Acid Plant Stack
Run # 1

V_m = 33.61 ft^3 T_m = 547.4 °R P_{bar} = 30.34 in. Hg Y = 1.000 P_m = 1.025 in. Hg

$$V_{m(std)} = 17.64 \frac{°R}{in.\ Hg} \times \frac{Y \quad V_m \quad (P_{bar} + P_m / 13.6)}{T_m} = 32.940\ ft^3$$

SO_2 CONCENTRATION

N = 0.00980 (meq)/ml V_t = 24.35 ml V_{tb} = 0.01 ml

V_{soln} = 1000.00 ml V_a = 2.00 ml

$$C_{SO_2} = 7.06 \times 10^{-5} \frac{N \quad (V_t - V_{tb}) \quad (V_{soln} / V_a)}{V_{m(std)}} = 0.2556E\text{-}03\ lb/dscf$$

pace. laboratories, inc.

METHOD 6
SULFUR DIOXIDE CALCULATION FORM

Wright Corporation Riegelwood N.C. Sulfuric Acid Plant Stack
Run # 2

V_m = 34.61 ft^3 T_m = 557.3 °R P_{bar} = 30.34 in. Hg Y = 1.000 P_m = 1.095 in. Hg

$$V_{m(std)} = 17.64 \frac{°R}{in.\ Hg} \times \frac{Y \quad V_m \quad (P_{bar} + P_m / 13.6)}{T_m} = 33.327\ ft^3$$

SO_2 CONCENTRATION

N = 0.00980 (meq)/ml V_t = 19.10 ml V_{tb} = 0.01 ml

V_{soln} = 1000.00 ml V_a = 2.00 ml

$$C_{SO_2} = 7.06 \times 10^{-5} \frac{N \quad (V_t - V_{tb}) \quad (V_{soln} / V_a)}{V_{m(std)}} = 0.1982E\text{-}03\ lb/dscf$$

pace. laboratories, inc.

METHOD 6
SULFUR DIOXIDE CALCULATION FORM

Wright Corporation Riegelwood N.C. Sulfuric Acid Plant Stack
Run # 3

V_m = 33.94 ft^3 T_m = 557.4 °R P_{bar} = 30.34 in. Hg Y = 1.000 P_m = 1.098 in. Hg

$$V_{m(std)} = 17.64 \frac{°R}{in.\ Hg} \times \frac{Y \quad V_m \quad (P_{bar} + P_m / 13.6)}{T_m} = 32.675\ ft^3$$

SO_2 CONCENTRATION

N = 0.00980 (meq)/ml V_t = 19.15 ml V_{tb} = 0.01 ml

V_{soln} = 1000.00 ml V_a = 2.00 ml

$$C_{SO_2} = 7.06 \times 10^{-5} \frac{N \quad (V_t - V_{tb}) \quad (V_{soln} / V_a)}{V_{m(std)}} = 0.2026E\text{-}03\ lb/dscf$$

pace. laboratories, inc.

METHOD 8
SULFURIC ACID MIST CALCULATION FORM

Wright Corporation Riegelwood N.C. Sulfuric Acid Plant Stack
Run # 1

V_m = 33.61 ft^3 T_m = 547.4 °R P_{bar} = 30.34 in. Hg Y = 1.000 P_m = 1.025 in. Hg

$$V_{m(std)} = 17.64 \frac{°R}{in.\ Hg} \times \frac{Y \quad V_m \quad (P_{bar} + P_m / 13.6)}{T_m} = 32.940\ ft^3$$

H_2SO_4 CONCENTRATION

N = 0.00980 (meq)/ml V_t = 9.95 ml V_{tb} = 0.01 ml

V_{soln} = 250.00 ml V_a = 100.00 ml

$$C_{H_2SO_4} = 1.081 \times 10^{-4} \frac{N \quad (V_t - V_{tb}) \quad (V_{soln} / V_a)}{V_{m(std)}} = 0.7992E-06\ lb/dscf$$

pace. laboratories, Inc.

METHOD 8
SULFURIC ACID MIST CALCULATION FORM

Wright Corporation Riegelwood N.C. Sulfuric Acid Plant Stack
Run # 2

V_m = 34.61 ft^3 T_m = 557.3 °R P_{bar} = 30.34 in. Hg Y = 1.000 P_m = 1.095 in. Hg

$$V_{m(std)} = 17.64 \frac{°R}{in.\ Hg} \times \frac{Y \quad V_m \quad (P_{bar} + P_m / 13.6)}{T_m} = 33.327\ ft^3$$

H_2SO_4 CONCENTRATION

N = 0.00980 (meq)/ml V_t = 8.40 ml V_{tb} = 0.01 ml

V_{soln} = 250.00 ml V_a = 100.00 ml

$$C_{H_2SO_4} = 1.081 \times 10^{-4} \frac{N \quad (V_t - V_{tb}) \quad (V_{soln} / V_a)}{V_{m(std)}} = 0.6667E\text{-}06\ lb/dscf$$

pace. laboratories, Inc.

METHOD 8
SULFURIC ACID MIST CALCULATION FORM

Wright Corporation Riegelwood N.C. Sulfuric Acid Plant Stack
Run # 3

V_m = 33.94 ft^3 T_m = 557.4 °R P_{bar} = 30.34 in. Hg Y = 1.000 P_m = 1.098 in. Hg

$$V_{m(std)} = 17.64 \frac{°R}{in.\ Hg} \times \frac{Y \quad V_m \quad (P_{bar} + P_m / 13.6)}{T_m} = 32.675\ ft^3$$

H_2SO_4 CONCENTRATION

N = 0.00980 (meq)/ml V_t = 6.95 ml V_{tb} = 0.01 ml

V_{soln} = 250.00 ml V_a = 100.00 ml

$$C_{H_2SO_4} = 1.081 \times 10^{-4} \frac{N \quad (V_t - V_{tb}) \quad (V_{soln} / V_a)}{V_{m(std)}} = 0.5625E\text{-}06\ lb/dscf$$

pace. laboratories, inc.

EMISSION RATE CALCULATIONS

Method 6 Sulfur Dioxide

Run 1 17599.4 (DSCFM) X 60 (Min.) = 1055964 DSCF/HR
1055964 DSCF/HR X 0.0002556 LB/DSCF = 269.9 LB/HR

Run 2 18009.9 (DSCFM) X 60 (Min.) = 1080594 DSCF/HR
1080594 DSCF/HR X 0.0001982 LB/DSCF = 214.2 LB/HR

Run 3 17850.1 (DSCFM) X 60 (Min.) = 1071006 DSCF/HR
1071006 DSCF/HR X 0.0002026 LB/DSCF = 217.0 LB/HR

Average SO_2 Emission Rate = 233.7 LB/HR

Method 8 Sulfuric Acid Mist

Run 1 17599.4 (DSCFM) X 60 (Min.) = 1055964 DSCF/HR
1055964 DSCF/HR X 0.0000007992 LB/DSCF = 0.844 LB/HR

Run 2 18009.9 (DSCFM) X 60 (Min.) = 1080594 DSCF/HR
1080594 DSCF/HR X 0.0000006667 LB/DSCF = 0.720 LB/HR

Run 3 17850.1 (DSCFM) X 60 (Min.) = 1071006 DSCF/HR
1071006 DSCF/HR X 0.0000005625 LB/DSCF = 0.602 LB/HR

Average H_2SO_4 Mist Emission Rate = 0.722 LB/HR

Production rate was 9.08 tons per hour of Sulfuric Acid during test on April 10, 1990.

Sulfur Dioxide Emission Rate of 233.7 pounds per hour equals an emission rate 25.7 pounds of SO_2 per ton of H_2SO_4 produced.

Sulfuric Acid Mist Emission Rate of 0.722 pounds per hour equals an emission rate of 0.080 pounds of H_2SO_4 mist per ton of H_2SO_4 produced.

pace®
laboratories, inc.

APPENDIX B

FIELD DATA SHEETS

pace laboratories, inc

TRAVERSE POINT LOCATION FOR CIRCULAR DUCTS

Plant WRIGHT CORP., RIEGELWOOD NC

Date APRIL 10, 1990

Sampling location SULFURIC ACID PLANT STACK

Inside of far wall to outside of nipple (I) 91.5"

Inside of near wall to outside of nipple (nipple length) (I) 1.5"

Stack I.D. (I-I) 90.0"

Nearest upstream disturbance 0.59 dd

Nearest downstream disturbance 2.13 dd

Calculated by RBM

Area 6361.7 in^2

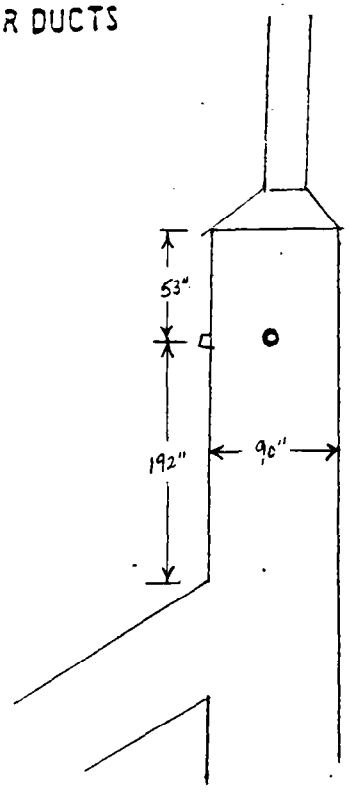

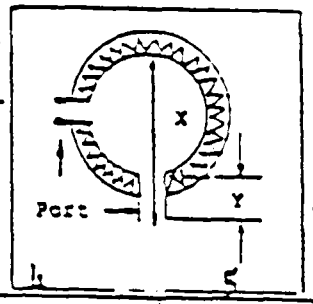

SCHEMATIC OF SAMPLING LOCATION

1 TRAVERSE POINT NUMBER	2 FRACTION OF STACK I.D.	3 STACK I.D.	PRODUCT OF COLUMNS 2 AND 3 (TO NEAREST 1/8 INCH)	NIPPLE LENGTH	TRAVERSE POINT LOCATION FROM OUTSIDE OF NIPPLE (SUM OF COLUMNS 4 & 5)
1	0.021	90.0"	1.89	1.5"	3.39
2	0.067		6.03		7.53
3	0.118		10.62		12.12
4	0.177		15.93		17.43
5	0.250		22.50		24.00
6	0.356		32.04		33.54
7	0.644		57.96		59.46
8	0.750		67.50		69.00
9	0.823		74.07		75.57
10	0.882		79.38		80.88
11	0.933		83.97		85.47
12	0.979	↓	88.11	↓	89.61

pace laboratories, inc

METHOD 2 GAS VELOCITY AND CYCLONIC FLOW DETERMINATION

Plant and City WRIGHT CORP., RIEGELWOOD N.C. Run Date 04/10/90

Sampling Location SULFURIC ACID PLANT STACK Clock Time 0815

Run Number 1 Operator RBM/WQB Amb. Temp., °F 62

Bar. Press., in. Hg 30.34 Static Press., in. H_2O -0.16

Stack Press., in. Hg 30.328 Static Press., in. Hg -0.012

Stack Dimension, in. - Diam. or side 1 90" side 2 ——

Pitot Tube (C_p) 0.84 Pitot Tube Leak Check <0.1 @ 4.3 in. H_2O

Field data

Traverse point number	Position, in.	Velocity head (Δp_s), in. H_2O A	B	Stack temp., °F A	B	Cyclonic flow determination: Δp_s at 0° reference A	B	Angle (α) which yields a null Δp A	B
1	3.39	0.01	0.08	166	166	+0.03	+0.05	10	12
2	7.53	0.03	0.10	166	166	+0.01	+0.03	8	9
3	12.12	0.03	0.07	166	166	+0.01	+0.01	6	4
4	17.43	0.04	0.04	166	166	0.00	+0.01	0	2
5	24.00	0.01	0.02	167	166	0.00	0.00	0	0
6	33.54	0.01	0.01	167	167	-0.01	0.00	6	0
7	59.46	0.02	0.01	167	168	-0.02	0.00	9	0
8	69.00	0.02	0.01	167	168	-0.02	0.00	10	0
9	75.57	0.05	0.01	167	168	0.00	-0.03	0	6
10	80.88	0.06	0.01	166	168	0.00	-0.04	0	8
11	85.47	0.06	0.01	166	168	0.00	-0.02	0	7
12	89.61	0.08	0.05	166	168	-0.01	-0.01	5	3

Average angle (α)[a] 4.8°

[a] Average of (α) must be < 10 degrees to be acceptable. ✓

0.1731

NOMAGRAPH DATA

1965

$\Delta H_@$ 1.84 T_m 90 %M 2% P_s/P_m 0.999 C 1.09 D_b 166

$\overline{\Delta p}$ 0.035 T_s 170 DN_c 0.490 DN_a 0.496 0.499 0.498 Ref. Δp 0.032 W_b 77 D/ 89

pace. laboratories, inc.

METHOD 6 SULFUR DIOXIDE FIELD DATA

Plant: WRIGHT CORP., RIEGELWOOD NC
Run No.: 1
Location: SULFURIC ACID PLT STACK
Date: 04/10/90
Operator: RBM/WRB
Sample Box No.: 4
Meter Box No.: 1965
Filter No.: MB-1
Probe No.: 1
Pilot Tube Cp: 0.84

Very Important — Fill In All Blanks
Leak Checks: Beg. @ 15": 0.003
End @ 15": 0.003
Pitot Tube: Pretest @ 3.2 "H_2O
Posttest @ 3.9 "H_2O
Static Pressure: -0.16 "H_2O
Start: 0918
Finish: 1022
Observer: Mike Aldridge Agency: N.C. DEHNR

Bar. Press. "Hg: 30.34
Meter Box ΔH@: 1.84 Y = 1.00
Assumed Tm, °F: 90
Dry Bulb, °F: 166
Wet Bulb, °F: 77
Db - Wb, °F: 89
Assumed Moisture %: 2%
Ps/Pm: 0.999
C Factor: 1.09

Ambient Temp., °F: 64
Heater Box Setting, °F: NA
Probe Tip Dia., in.: 0.496
Probe Length: 8'
Probe Heater Setting: 85%
Average Δp: 0.035 Δp: 0.032
Average ΔH: 1.98 ΔH: Rel
Process Weight: NA
Steam Load: NA
Steam Pressure: NA

Point	Clock Time	Dry Gas Meter, Cu. Ft.	Pitot Manometer (Δp) in H_2O	Orifice Manometer (ΔH) in H_2O Desired	Orifice Manometer (ΔH) in H_2O Actual	Dry Gas Temp. °F Inlet	Dry Gas Temp. °F Outlet	Pump Vacuum in Hg Gauge	Box Temp. °F	Impinger Temp. °F	Stack Temp. °F	% CO_2	% O_2
A 1	0	868.00	0.02	1.14	1.14	68	68	5.5	NA	57	163		
2	2½	869.53	0.02	1.14	1.14	73	69	5.5	NA	53	166		
3	5	871.01	0.02	1.14	1.14	76	69	5.5	NA	51	165		
4	7½	872.47	0.02	1.14	1.14	80	70	5.5	NA	52	165		
5	10	873.98	0.02	1.14	1.14	86	71	5.5	NA	53	167		
6	12½	875.49	0.01	0.58	0.58	87	71	4.5	NA	55	167		
7	15	876.64	0.01	0.58	0.58	88	72	4.5	NA	55	166		
8	17½	877.79	0.01	0.58	0.58	90	73	4.5	NA	56	169		
9	20	878.93	0.01	0.58	0.58	94	74	4.5	NA	55	168		
10	22½	880.05	0.02	1.14	1.14	96	76	5.5	NA	56	170		
11	25	881.54	0.02	1.14	1.14	100	78	5.5	NA	57	167		
12	27½	883.05	0.03	1.71	1.71	104	78	8.5	NA	58	168		
B 1	30	884.87	0.05	2.85	2.85	99	80	11.0	NA	54	165		
2	2½	887.21	0.04	2.25	2.25	102	82	10.0	NA	52	168		
3	5	889.28	0.03	1.71	1.71	107	84	8.5	NA	53	167		
4	7½	891.05	0.02	1.14	1.14	110	86	5.5	NA	55	169		
5	10	892.52	0.01	0.58	0.58	109	88	4.5	NA	56	169		
6	12½	893.67	0.01	0.58	0.58	106	88	4.5	NA	57	168		
7	15	894.81	0.01	0.58	0.58	105	87	4.5	NA	57	169		
8	17½	895.93	0.01	0.58	0.58	104	87	4.5	NA	57	168		
9	20	897.07	0.01	0.58	0.58	102	88	4.5	NA	58	169		
10	22½	898.22	0.01	0.58	0.58	102	88	4.5	NA	58	165		
11	25	899.36	0.01	0.58	0.58	101	89	4.5	NA	58	165		
12	27½	900.49	0.01	0.58	0.58	102	90	4.5	NA	59	164		
	30	901.61											

P 1 for 15 Minutes (1025-1040)

pace. laboratories, inc

METHOD 6 SULFUR DIOXIDE FIELD DATA

Plant: WRIGHT CORP., RIEGELWOOD N.C
Run No.: 2
Location: SULFURIC ACID PLUMES
Date: 04/10/90
Operator: RBM/WQB
Sample Box No.: 5
Meter Box No.: 1965
Filter No.: MB-2
Probe No.: ~~0.84~~ 2
Pilot Tube Cp: 0.84

Very Important — Fill In All Blanks
Leak Checks: Beg. @ 15": 0.004
End @ 11": 0.007
Pitot Tube: Pretest @ 3.7 "H_2O
Posttest @ 4.1 "H_2O
Static Pressure: -0.16 "H_2O
Start: 1105
Finish: 1208
Observer: Mike Aldridge Agency: N.C. DEHNR

Bar. Press. "Hg: 30.34
Meter Box ΔH@: 1.84 Y = 1.00
Assumed Tm, °F: 90
Dry Bulb, °F: 166
Wet Bulb, °F: 77
Db - Wb, °F: 89
Assumed Moisture %: 2%
Ps/Pm: 0.999
C Factor: 1.09

Ambient Temp., °F: 69
Heater Box Setting, °F: NA
Probe Tip Dia., in.: 0.499
Probe Length: 8'
Probe Heater Setting: 85%
Average Δp: 0.035 Δp: 0.032
Average ΔH: 1.98 ΔH: Rel
Process Weight: NA
Steam Load: NA
Steam Pressure: NA

Point	Clock Time	Dry Gas Meter, Cu. Ft.	Pitot Manometer (Δp) in H_2O	Orifice Manometer (ΔH) in H_2O Desired	Orifice Manometer (ΔH) in H_2O Actual	Dry Gas Temp. °F Inlet	Dry Gas Temp. °F Outlet	Pump Vacuum in Hg Gauge	Box Temp. °F	Impinger Temp. °F	Stack Temp. °F	% CO_2	% O_2
A1	0	919.00	0.02	1.14	1.14	84	84	5.0	NA	55	167		
2	2½	920.54	0.02	1.14	1.14	88	85	5.0	NA	53	166		
3	5	922.03	0.02	1.14	1.14	92	86	5.0	NA	51	168		
4	7½	923.54	0.03	1.71	1.71	95	87	7.0	NA	52	165		
5	10	925.36	0.02	1.14	1.14	99	88	5.0	NA	53	166		
6	12½	926.87	0.01	0.58	0.58	102	89	3.0	NA	54	167		
7	15	928.03	0.01	0.58	0.58	101	89	3.0	NA	54	167		
8	17½	929.16	0.01	0.58	0.58	102	90	3.0	NA	55	169		
9	20	930.28	0.01	0.58	0.58	102	90	3.0	NA	55	168		
10	22½	931.42	0.02	1.14	1.14	103	90	5.0	NA	56	168		
11	25	932.91	0.03	1.71	1.71	103	90	7.0	NA	56	165		
12	27½	934.69	0.03	1.71	1.71	103	91	7.0	NA	54	165		
B1	30/0	936.47	0.05	2.85	2.85	99	91	11.0	NA	55	167		
2	2½	938.75	0.04	2.25	2.25	104	92	8.5	NA	55	165		
3	5	940.78	0.04	2.25	2.25	107	94	8.5	NA	55	166		
4	7½	942.84	0.02	1.14	1.14	111	94	5.0	NA	56	169		
5	10	944.36	0.01	0.58	0.58	112	94	3.0	NA	56	168		
6	12½	945.55	0.01	0.58	0.58	113	94	3.0	NA	57	169		
7	15	946.70	0.01	0.58	0.58	114	94	3.0	NA	58	166		
8	17½	947.85	0.01	0.58	0.58	115	94	3.0	NA	58	167		
9	20	949.01	0.01	0.58	0.58	116	95	3.0	NA	58	166		
10	22½	950.15	0.01	0.58	0.58	109	95	3.0	NA	59	166		
11	25	951.29	0.01	0.58	0.58	108	95	3.0	NA	59	165		
12	27½	952.46	0.01	0.58	0.58	108	94	3.0	NA	60	164		
	30	953.61											

pace. laboratories, inc.

METHOD 6 SULFUR DIOXIDE FIELD DATA

Plant: WRIGHT CORP., RIEGELWOOD N.C.
Run No.: 3
Location: SULFURIC ACID PLT STACK
Date: 04/10/90
Operator: RBM / WOB
Sample Box No.: 6
Meter Box No.: 1965
Filter No.: MB-3
Probe No.: 3
Pilot Tube Cp: 0.84

Very Important — Fill In All Blanks
Leak Checks: Beg. @ 15": 0.012
End @ 9": 0.018
Pilot Tube: Pretest @ 3.7 "H_2O
Posttest @ ___ "H_2O
Static Pressure: -0.16 "H_2O
Start: 1300
Finish: 1407
Observer: Mike Aldridge, Shannon Vogel Agency: N.C. DEHNR

Bar. Press. "Hg: 30.34
Meter Box ΔH@: 1.84 Y = 1.00
Assumed Tm, °F: 90
Dry Bulb, °F: 166
Wet Bulb, °F: 77
Db - Wb, °F: 89
Assumed Moisture %: 2%
Ps/Pm: 0.999
C Factor: 1.09

Ambient Temp., °F: 71
Heater Box Setting, °F: NA
Probe Tip Dia., in.: 0.498
Probe Length: 8' S.S. lined
Probe Heater Setting: 85%
Average Δp: 0.035 Δp Ref: 0.032
Average ΔH: 1.98 ΔH Ref:
Process Weight: NA
Steam Load: NA
Steam Pressure: NA

Point	Clock Time	Dry Gas Meter, Cu. Ft.	Pilot Manometer (Δp) in H_2O	Orifice Manometer (ΔH) in H_2O Desired	Orifice Manometer (ΔH) in H_2O Actual	Dry Gas Temp. °F Inlet	Dry Gas Temp. °F Outlet	Pump Vacuum in Hg Gauge	Box Temp. °F	Impinger Temp. °F	Stack Temp. °F	% CO_2	% O_2
A1	0	966.30	0.02	1.14	1.14	86	86	4.0	NA	52	169		
2	2½	967.44	0.02	1.14	1.14	90	90	4.0	NA	51	168		
3	5	969.88	0.02	1.14	1.14	93	91	4.0	NA	53	168		
4	7½	970.80	0.03	1.71	1.71	97	91	5.0	NA	55	168		
5	10	972.66	0.01	0.58	0.58	98	91	2.5	NA	54	169		
6	12½	973.85	0.01	0.58	0.58	99	91	2.5	NA	54	167		
7	15	974.96	0.01	0.58	0.58	100	92	2.5	NA	55	168		
8	17½	976.06	0.01	0.58	0.58	100	92	2.5	NA	55	169		
9	20	977.18	0.01	0.58	0.58	101	92	2.5	NA	56	167		
10	22½	978.32	0.02	1.14	1.14	102	92	4.0	NA	55	166		
11	25	979.76	0.02	1.14	1.14	105	93	4.0	NA	56	165		
12	27½	981.27	0.03	1.71	1.71	106	95	5.0	NA	57	166		
B1	30	983.05	0.05	2.85	2.85	100	96	8.5	NA	58	166		
2	2½	985.34	0.05	2.85	2.85	102	95	8.5	NA	59	165		
3	5	987.65	0.05	2.85	2.85	105	96	8.5	NA	59	168		
4	7½	989.91	0.02	1.14	1.14	106	97	4.0	NA	59	168		
5	10	991.40	0.01	0.58	0.58	107	97	2.5	NA	60	167		
6	12½	992.51	0.01	0.58	0.58	106	95	2.5	NA	60	166		
7	15	993.60	0.01	0.58	0.58	106	96	2.5	NA	60	166		
8	17½	994.71	0.01	0.58	0.58	105	95	2.5	NA	60	167		
9	20	995.81	0.01	0.58	0.58	104	96	2.5	NA	60	166		
10	22½	996.91	0.01	0.58	0.58	104	95	2.5	NA	61	167		
11	25	998.03	0.01	0.58	0.58	104	95	2.5	NA	61	166		
12	27½	999.14	0.01	0.58	0.58	105	95	2.5	NA	61	164		
	30	1000.24											

pace laboratories inc

METHOD 3 - ORSAT AND DRY MOLECULAR WEIGHT DETERMINATION

Plant WRIGHT CORP., RIEGELWOOD N.C. Sample Location SULFURIC ACID PLT STK

Sample Type - Continuous ✓ Pump Leakfree @ 10" ? ✓

Oxygen Check 20.9% ± 0.1% ✓ Fuel Type NONE

Orsat Leak Check @ 4 min.: Pipet Levels - Leakfree ? ✓

Buret 13.6 - 13.6 = <0.2 ml ? ✓

Run No. 1 Sample Date 04/10/90 Ambient Temp. °F 69

Sampling Time (24 - hr clock) 0918-1022 Analysis By RBM

Gas \ Run	1 Actual	1 Net	2 Actual	2 Net	3 Actual	3 Net	Avg. %	Mult.	Molecular Wt. Dry lb/lb mole
CO_2	0.0	0.0	0.0	0.0	0.0	0.0	0.00	.44	0.000
O_2	20.9	20.9	20.9	20.9	20.9	20.9	20.90	.32	6.688
CO	20.9	0.0	20.9	0.0	20.9	0.0	0.00	.28	0.0000
N_2	100	79.1	100	79.1	100	79.1	79.10	.28	22.148
								Total	28.836

$$F_o = \frac{20.9 - \%O_2}{\%CO_2} = NA$$

Run No. 2 Sample Date 04/10/90 Ambient Temp. °F 70

Sampling Time (24 - hr clock) 1105-1208 Analysis By RBM

Gas \ Run	1 Actual	1 Net	2 Actual	2 Net	3 Actual	3 Net	Avg. %	Mult.	Molecular Wt. Dry lb/lb mole
CO_2	0.0	0.0	0.0	0.0	0.0	0.0	0.00	.44	0.000
O_2	20.9	20.9	20.9	20.9	20.9	20.9	20.90	.32	6.688
CO	20.9	0.0	20.9	0.0	20.9	0.0	0.00	.28	0.000
N_2	100	79.1	100	79.1	100	79.1	79.10	.28	22.148
								Total	28.836

$$F_o = \frac{20.9 - \%O_2}{\%CO_2} = NA$$

Run No. 3 Sample Date 04/10/90 Ambient Temp. °F 70

Sampling Time (24 - hr clock) 1300-1407 Analysis By RBM

Gas \ Run	1 Actual	1 Net	2 Actual	2 Net	3 Actual	3 Net	Avg. %	Mult.	Molecular Wt. Dry lb/lb mole
CO_2	0.0	0.0	0.0	0.0	0.0	0.0	0.00	.44	0.000
O_2	20.9	20.9	20.9	20.9	20.9	20.9	20.90	.32	6.688
CO	20.9	0.0	20.9	0.0	20.9	0.0	0.00	.28	0.000
N_2	100	79.1	100	79.1	100	79.1	79.10	.28	22.148
								Total	28.836

Fuel type	F_o range
Coal:	
Anthracite and lignite	1.016-1.130
Bituminous	1.083-1.220
Wood	1.000-1.120
Wood bark	1.003-1.130

$$F_o = \frac{20.9 - \%O_2}{\%CO_2} = NA$$

pace. laboratories, inc.

METHOD 8 SAMPLE RECOVERY SHEET

Plant WRIGHT CORP. RIEGELWOOD NC Recovered By RBM/WDB
Sample Location SULFURIC ACID PLT STK Recovery Date 04/10/90

Run Number	1	2	3
Sample Date	04/10/90	04/10/90	04/10/90
Sample Box Number	4	5	6
Probe Number	1	2	3
Filter Number	MB-1	MB-2	MB-3

MOISTURE RECOVERY

First Impinger (80% Isopropyl Alcohol)

Impinger Container Number	1-1	1-2	1-3
Description of Liquid	Clear	Clear	Clear
Liquid Level Marked	✓	✓	✓
Final Volume (wt.), ml	64	66	64
Initial Volume (wt.), ml	100	100	100
Net Volume (wt.), ml (g)	<36>	<34>	<36>

Second & Third Impingers (H_2O_2)

Impinger Container Number	1-4	1-5	1-6
Description of Liquid	Clear	Clear	Clear
Liquid Level Marked	✓	✓	✓
Final Volume (wt.), ml	230	235	237
Initial Volume (wt.), ml	200	200	200
Net Volume (wt.), ml (g)	30	35	37

Fourth Impinger (Silica Gel)

Silica Gel Container Number	1-7	1-8	1-9
Silica Gel, % Spent	50%	60%	50%
Final Weight, g	216.0	216.4	216.5
Initial Weight, g	200.0	200.0	200.0
Net Weight, g	16.0	16.4	16.5

Total Moisture, g	12.0	17.4	17.5

pace. laboratories, inc.

APPENDIX C

ANALYTICAL DATA

pace. laboratories, inc.

METHOD 6 SULFUR DIOXIDE ANALYTICAL DATA

Client Name/City Wright Corporation Riegelwood, North Carolina Date 04-10-90

Sample Location: H_2SO_4 Stack Analyst: RBM/DL Date Analyzed: 04-12-90

Volume & Normality of Standard Sulfuric Acid Solution: 25ml of .0100N +/- 0.0002

Volume & Normality of Barium Perchlorate Titrant:

1).	25.6 ml	0.0098N
2).	25.4 ml	0.0098N
3).	25.5 ml	0.0098N
Average Normality		0.0098N

LABORATORY DATA

Sample Number	Sample Identification	Total Sample Volume (V_{soln}) ml	Sample Aliquot Volume (V_a) ml	Volume of Titrant (V_t), ml 1st Titration	2nd Titration	Average Volume
1	WC M6-1	1000	2	24.40	24.30	24.35
2	WC M6-2	1000	2	19.00	19.20	19.10
3	WC M6-3	1000	2	19.10	19.20	19.15
4	Audit 1059	100	20	2.80	2.70	2.75
5	Audit 2551	100	20	6.20	6.25	6.23
6	Audit 3707	100	20	15.10	15.00	15.05
Blank	V_{bb}	N/A	20	0.01	0.01	0.01

AUDIT TRUE VALUES

Sample Identification	True Value	Obtained Value	Percent Recovery
Audit 1059	200.0	204.8	102.4%
Audit 2551	470.0	464.9	98.9%
Audit 3707	1100.0	1124.0	102.2%

Notes: Volume for the blank must be the same as that of the sample aliquot.

Replicate Validation :

$$\frac{\text{1st titration}}{\text{2nd titration}} = 0.99 \text{ to } 1.01 \quad \text{or}$$

the absolute value of
(1st titration - 2nd titration) $\leq$ 0.2 ml

Analyst Signature Robert B. Williams III Reviewed By Paul Gaskins

pace laboratories, Inc.

METHOD 8 SULFURIC ACID ANALYTICAL DATA

Client Name/City Wright Corporation Riegelwood, North Carolina Date 04-10-90

Sample Location: H_2SO_4 Stack Analyst: RBM/DL Date Analyzed: 04-12-90

Volume & Normality of Standard Sulfuric Acid Solution: 25ml of .0100N +/- 0.0002

Volume & Normality of Barium Perchlorate Titrant:

1).	25.6 ml	0.0098N
2).	25.4 ml	0.0098N
3).	25.5 ml	0.0098N
Average Normality		0.0098N

LABORATORY DATA

Sample Number	Sample Identification	Total Sample Volume (V_{soln}) ml	Sample Aliquot Volume (V_a) ml	Volume of Titrant (V_t), ml 1st Titration	2nd Titration	Average Volume
1	WC M8-1	250	100	10.00	9.90	9.95
2	WC M8-2	250	100	8.50	8.30	8.40
3	WC M8-3	250	100	6.90	7.00	6.95
4	Audit 1059	100	20	2.80	2.70	2.75
5	Audit 2551	100	20	6.20	6.25	6.23
6	Audit 3707	100	20	15.10	15.00	15.05
Blank	V_{tb}	N/A	20	0.01	0.01	0.01

AUDIT TRUE VALUES

Sample Identification	True Value	Obtained Value	Percent Recovery
Audit 1059	200.0	204.8	102.4%
Audit 2551	470.0	464.9	98.9%
Audit 3707	1100.0	1124.0	102.2%

Notes: Volume for the blank must be the same as that of the sample aliquot.

Replicate Validation :

$$\frac{\text{1st titration}}{\text{2nd titration}} = 0.99 \text{ to } 1.01 \quad \text{or}$$

the absolute value of
(1st titration - 2nd titration) $\leq$ 0.2 ml

Analyst Signature Richard B. McCain III Reviewed By Paul R. Jenkins

pace.
laboratories, Inc.

APPENDIX D

PROCESS DATA

The quantity of 218.0 tons of sulfuric acid (100%) was produced during a 24 hour period on March 8, 1990.

WRIGHT CORPORATION

April 10, 1990

Richard McCain
Pace Laboratories, Inc.
1700 University Commercial Place
Charlotte, NC 28213

Dear Mr. McCain:

In reference to the stack testing Pace Laboratories performed on Tuesday, April 10, 1990, I am transmitting production data for incorporating into your report. As calculated and verifiable by records, which will be maintained here, the quantity produced on the day of the testing was 218.0 tons of sulfuric acid (100%).

If you require more data or additional information for preparing the final report, please contact me.

Sincerely,

WRIGHT CORPORATION

Dann Dettman

Dann Dettman
Governmental Affairs Officer

DD:nl

P.O. BOX 402 • RIEGELWOOD, N.C. 28456 • TELEPHONE 919-655-2263 • FAX 919-655-9671

pace. laboratories, Inc.

APPENDIX E

TEST PARTICIPANTS

Richard B. McCain, III	Air Sampling Manager PACE, Inc.
W. Quentin Best	Air Sampling Technician PACE, Inc.

pace.
laboratories, inc.

APPENDIX F

SAMPLING AND ANALYTICAL PROCEDURES

pace laboratories, inc.

APPENDIX G

CALIBRATION DATA

pace.
laboratories, inc.

CALIBRATION INFORMATION

NOZZLES

Each new set of nozzles purchased by Pace are first machined and calibrated before being put into field use. Thereafter, whenever it becomes apparent that a nozzle has been damaged, it is again machined and recalibrated. A set of three is matched to within 0.002 inches (Difference between high and low readings). Nozzles are checked prior to each source test.

PITOT TUBES

All pitot tubes used by Pace whether separate or attached to a sampling probe were made by Pace personnel. Prior to being put into field use, they are calibrated. In general, if a type "S" pitot tube is constructed properly, and not positioned too closely to the probe nozzle or any other obstruction, it will have a Cp of 0.83 - 0.87. As long as the pitot tube is not damaged its calibration should not change. All Pace pitot tubes are made to have a Cp of 0.84. If a pitot tube does not initially have a Cp of 0.84, it is altered until a reading of 0.84 is obtained. Pitot tubes are checked before each source test and receive a complete calibration once a year.

DRY GAS METER AND ORIFICE METER

Complete meter box calibrations are performed annually. One point calibrations at the average orifice meter and maximum vacuum readings encountered during the compliance test are performed after each source test. If the dry gas meter calibration factor differs from 1.00 by more than +\- 0.02 then the dry gas meter is repaired and given an annual calibration.

THERMOMETERS, FYRITES, ORSAT AND ORSAT BAGS

Each new thermometer, pyrometer and thermocouple purchased or manufactured by Pace is checked and calibrated before being put into field use. After each source test each temperature sensing device used on the test receives a one point calibration check according to U.S. EPA guidelines.

Fyrites, orsat and orsat bags are checked before and after each source test. If they do not function according to U.S. EPA protocol that piece of equipment is either repaired or replaced.

LABORATORY EQUIPMENT

Pace has a written quality assurance document that covers calibration and maintenance of laboratory equipment. This includes calibration of the analytical balance against Class S weights, and service contracts to maintain traceability to N.B.S. Calibration of thermometers, barometers, stopwatches and wet test meters are traceable to N.B.S. A copy of our quality assurance document may be obtained by written request.

pace laboratories, inc.

METHOD 5 PRETEST - POSTEST CALIBRATION CHECKS

Plant WRIGHT CORP. RIEGELWOOD N.C. Calibrated by RBM
Meter box number 1965 Date 04/09/90 + 4/11/90

Dry Gas Meter

Pretest meter calibration factor, Y = 1.00 (within ± 2%)
Postest meter calibration factor, Y = 1.001 (within ± 5% of pretest)
Recalibration required? Circle one: yes or (no) If yes new Y = —
Lower cal. factor, Y = — for calculations (pretest or postest)

Dry Gas Meter Thermometers

Was a pretest temperature correction used? Circle one: yes or (no) If yes temperature correction — (within ± 5.4°F over range)
Postest comparison with mercury-in-glass thermometer? (within ±10.8°F at ambient temperature) Recalibration required? Circle one: yes or (no)
Recalibration temperature correction? — (within ±5.4°F over range
If yes, no correction necessary for calculations if meter thermometer temperature is higher; if calibration temperature is higher, add correction to average meter temperature for calculations

Stack Temperature Sensor

Was a pretest temperature correction used? Circle one: yes or (no) If yes temperature correction — °F (within ±1.5% in °R over range)
Average stack temperature of compliance test, 627 °R
Temperature of ref. thermometer for recalibration #1 635 #2 635 °R
(within ± 10% of the average stack temperature)
Temperature of stack thermometer for recalibration #1 631 #2 627 °R
Diff. between ref. and stack thermometer temps. #1 4 #2 8 °R
Do the ref. and stack values agree within ±1.5%? Circle one: (yes) or no
If yes, no correction is necessary for calculations
If no, calculations must be done twice—once with the recorded values and once with the average stack temperature corrected to correspond to the reference temperature differential; both final result values must be reported since there is no way to determine which is correct

Barometer

Was the pretest field barometer reading correct? Circle one: (yes) or no
Postest comparison? 0.006 in. Hg (±0.1 in. Hg) Recalibration required? Circle one: yes or (no) If yes, no correction necessary for calculations when the field barometer has a lower reading; if the mercury-in-glass reading is lower, subtract the difference from the field data readings for the calculations.

	Pretest	Postest
Hg in glass	29.624	29.304
Field	29.64	29.390
Difference	0.016	0.006

Nozzle

Was the nozzle calibrated to the nearest .001 in.? Circle one: (yes) or no

Nozzle #1:	0.496	0.496	0.497	0.496	0.497	: Average 0.496
Nozzle #2:	0.499	0.498	0.498	0.499	0.499	: Average 0.499
Nozzle #3:	0.498	0.498	0.499	0.498	0.497	: Average 0.498

Impinger Thermometer

Was a pretest temperature correction used? Circle one: yes or (no) If yes temperature correction — (within ±5.4°F over range)

POSTEST DRY GAS METER CALIBRATION DATA FORM (English Units)

Test Number 1 Date 4/11/90 Meter Box No. 1965 Plant WRIGHTCORP, RIEGELWOOD N.C.

Barometric Pressure, P_b = 29.384 in. Hg Dry Gas Meter No. 1965 Pretest Y 1.00

Orifice manometer setting, inches H_2O ΔH	Gas Volume: Wet test meter, ft³ V_w	Gas Volume: Dry gas meter, ft³ V_d	Temperature: Wet test meter, °F t_w	Temperature: Dry Gas Meter: Inlet °F t_{d_i}	Temperature: Dry Gas Meter: Outlet °F t_{d_o}	Temperature: Dry Gas Meter: Average °F t_d	Time min. θ	Vacuum setting in. Hg	Y_i	Y_i $\frac{V_w P_b (t_d + 460)}{V_d (P_b + \frac{\Delta H}{13.6})(t_w + 460)}$
1.07	10	10.73	69	119.5	98	108.75	18:26	14.0	1.000	$\frac{10(29.384)(108.75+460)}{10.73(29.384+\frac{1.07}{13.6})(69+460)}$
1.07	10	10.73	69	120.5	98.5	109.5	18:27	14.0	1.001	$\frac{10(29.384)(109.5+460)}{10.73(29.384+\frac{1.07}{13.6})(69+460)}$
1.07	10	10.74	69	121	99	110	18:29	14.0	1.001	$\frac{10(29.384)(110+460)}{10.74(29.384+\frac{1.07}{13.6})(69+460)}$
										1.001

V_w = Gas volume passing through the wet test meter, ft.³

V_d = Gas volume passing throught the dry gas meter, ft.³

t_w = Temperature of the gas in the wet test meter, °F

t_{d_i} = Temperature of the inlet gas of the dry gas meter, °F

t_{d_o} = Temperature of the outlet gas of the dry gas meter, °F

t_d = Average temperature of the gas in the dry gas meter, obtained by the average of t_{d_i} and t_{d_o}, °F

ΔH = Pressure differential across orifice, in. H_2O

Y_i = Ratio of acturacy of wet test meter to dry gas meter for each run

Y = Average ratio of accuracy of wet test meter to dry gas meter for all three runs; tolerance = pretest Y ± 0.05Y

P_b = Barometric pressure, in. Hg

θ = Time of calibration run, min.

PCG Laboratories, Inc.

pace. laboratories, inc.

PRETEST - POSTEST THERMOMETER CALIBRATION

Client WRIGHT CORP. Date 04/09/90 + 4/11/90

Location RIEGELWOOD, N.C. Ref. Thermometer #5

Thermometer	Pretest		Postest	
	Temp., °F	Ref. Temp., °F	Temp., °F	Ref. Temp., °F
DGM #1965	70/70	70	72/72	72
DGM #1348	69/70	70	—	—
DGM # —	—	—	—	—
DGM # —	—	—	—	—
Impinger #1	70	70	73	72
Impinger #2	70	70	72	72
Impinger #3	69	70	72	72
Impinger #4	70	70	72	72
Impinger #5	70	70	72	72
WB #2	70	70	71	72
DB #2	70	70	72	72
Box #1	—	—	—	—
Box #2	—	—	—	—
Box #3	—	—	—	—
Box #4	71	70	72	72
Box #5	70	70	72	72
Box #6	70	70	72	72
WB Omega 873	70	70	73	72
DB Omega 873	70	70	72	72
WB Omega #2	70	70	72	72
DB Omega #2	70	70	72	72
Probe 8' #1	69	70	71	72
Probe 8' #2	70	70	72	72
Probe — ' #1	—	—	—	—
Probe — ' #2	—	—	—	—
—	—	—	—	—

PACE laboratories, inc

RAC STAKSAMPLR CALIBRATION SHEET

Meter Box Serial Number: 1965 Barometric Pressure (P_b): 29.040

Leak Check @ 5.0 in. H_2O: OK Date: 12-26-89 Calibrated by: JAB

Pump: OK Pump Oil: OK Clean Quick Connects: OK

Manometers: OK Dry Test Meter: OK Thermometers: OK

Lights: OK Electrical Check: OK Variac: OK

Vacuum Gauge: OK Leak Check @ 27" Hg.: <0.001 CFM

Man. Orifice	CF_m	CF_d	T_m	IT_d	OT_d	$T_{d\ avg.}$	Time t
0.5	5	5.35	65.2	104.5	90.0	97.25	12.80
1.0	5	5.38	65.2	110.0	92.0	101.00	9.28
1.5	10	10.79	65.2	116.0	96.0	106.00	15.24
2.0	10	10.80	65.5	118.0	96.5	107.25	13.35
3.0	10	10.76	65.5	121.0	99.0	110.00	11.10
4.0	10	10.77	65.6	122.5	100.5	111.50	9.68

Calculate Y and $\sim H@$ as follows:

$$Y = \frac{CF_m\ P_b\ (T_{d\ avg.} + 460)}{CF_d\ (P_b + \sim H/13.6)(T_m + 460)} = 1.00 \qquad \sim H@ = \frac{0.0317\ \sim H}{P_b\ (T_d + 460)} \left(\frac{(T_m + 460)\ t}{CF_m}\right)^2 = 1.84$$

Tolerances: Y = 0.90 - 1.00 - 1.10 Y +/- 0.02Y $\sim H@ = 1.6 - 1.84 - 2.1$ $\sim H@_i$ +/- 0.15 in.

CALIBRATION CALCULATIONS PUMP AND ORIFICE METER

Manometer Delta H 0.5 in. H_2O

$$Y = \frac{5 \times 29.040\ (97.25 + 460)}{5.35\ (29.040 + 0.0368)(65.2 + 460)} = 0.990 \qquad \sim H@ = \frac{0.01585}{29.040\ (97.25 + 460)} \left(\frac{(65.2 + 460)\ 12.80}{5}\right)^2 = 1.630$$

Manometer Delta H 1.0 in. H_2O

$$Y = \frac{5 \times 29.040\ (101.00 + 460)}{5.38\ (29.040 + 0.0737)(65.2 + 460)} = 0.990 \qquad \sim H@ = \frac{0.03170}{29.040\ (101.00 + 460)} \left(\frac{(65.2 + 460)\ 9.28}{5}\right)^2 = 1.805$$

Manometer Delta H 1.5 in. H_2O

$$Y = \frac{10 \times 29.040\ (106.00 + 460)}{10.79\ (29.040 + 0.1103)(65.2 + 460)} = 0.995 \qquad \sim H@ = \frac{0.04755}{29.040\ (106.00 + 460)} \left(\frac{(65.2 + 460)\ 15.24}{10}\right)^2 = 1.793$$

Manometer Delta H 2.0 in. H_2O

$$Y = \frac{10 \times 29.040\ (107.25 + 460)}{10.80\ (29.040 + 0.1471)(65.5 + 460)} = 0.994 \qquad \sim H@ = \frac{0.06340}{29.040\ (107.25 + 460)} \left(\frac{(65.5 + 460)\ 13.35}{10}\right)^2 = 1.912$$

Manometer Delta H 3.0 in. H_2O

$$Y = \frac{10 \times 29.040\ (110.00 + 460)}{10.76\ (29.040 + 0.2206)(65.5 + 460)} = 1.000 \qquad \sim H@ = \frac{0.09510}{29.040\ (110.00 + 460)} \left(\frac{(65.5 + 460)\ 11.10}{10}\right)^2 = 1.939$$

Manometer Delta H 4.0 in. H_2O

$$Y = \frac{10 \times 29.040\ (111.50 + 460)}{10.77\ (29.040 + 0.2941)(65.6 + 460)} = 0.999 \qquad \sim H@ = \frac{0.12680}{29.040\ (111.50 + 460)} \left(\frac{(65.6 + 460)\ 9.68}{10}\right)^2 = 1.967$$

pace. laboratories, inc

TYPE S PITOT TUBE INSPECTION DATA FORM

Date: 07-24-89
Calibrator: WQB

Specifications:
1.) Pitot tube assembly must be level.
2.) If pitot tube is damaged explain under comments section.
3.) $z = A \sin \tau$ (<0.125) and $w = A \sin \theta$ (<0.03125)
4.) α <10° and β <5°

I.D.	α_1°	α_2°	β_1°	β_2°	τ°	θ°	A, in.	z, in.	w, in.	P_A, in.	P_B, in.	D_t, in.
36''- 1	1.0	1.5	1.0	1.5	2.0	0.5	0.730	0.025	0.00640	0.365	0.365	0.376
36''- 2	2.0	2.0	2.0	1.5	0.0	0.5	1.152	0.000	0.01005	0.576	0.576	0.376
40''- 1	1.0	0.0	1.0	0.0	0.5	0.5	1.112	0.010	0.00970	0.556	0.556	0.385
54''- 1	1.0	0.5	0.5	1.0	1.0	1.5	0.960	0.017	0.02513	0.480	0.480	0.385
66''- 1	1.0	0.0	3.0	2.0	0.5	1.5	1.042	0.009	0.02728	0.521	0.521	0.375
96''- 1	0.0	2.0	2.0	1.5	2.0	1.5	0.902	0.032	0.02361	0.451	0.451	0.380
3' - 1	0.0	0.0	0.0	0.0	0.0	1.0	1.057	0.000	0.01845	0.528	0.529	0.376
3' - 2	0.5	0.5	0.0	0.5	0.5	0.0	1.044	0.009	0.00000	0.522	0.522	0.375
3' - 3	0.5	0.5	1.0	0.5	0.5	1.0	1.044	0.009	0.01822	0.522	0.522	0.378
4' - 1	0.5	0.5	0.5	2.0	0.5	1.0	0.950	0.008	0.01658	0.475	0.475	0.378
4' - 2	0.0	0.5	0.0	1.5	1.0	0.5	0.889	0.016	0.00776	0.444	0.445	0.376
4' - 3	3.5	2.5	1.0	1.5	0.5	1.5	0.875	0.008	0.02290	0.437	0.438	0.376
4' - 4	0.5	3.5	2.5	1.5	0.5	1.0	0.837	0.007	0.01461	0.419	0.418	0.375
4' - 5	0.5	1.0	1.5	0.0	0.0	1.5	0.861	0.000	0.02254	0.431	0.430	0.374
4' - 6	0.5	0.0	0.5	0.5	1.0	1.5	0.947	0.017	0.02479	0.474	0.473	0.379
5' - 1	1.0	1.0	1.0	2.0	2.0	0.5	1.044	0.036	0.00911	0.522	0.522	0.373
5' - 2	0.5	1.0	1.0	1.5	0.5	0.5	1.046	0.009	0.00913	0.523	0.523	0.373
5' - 3	0.5	1.0	0.5	0.5	0.5	1.5	1.045	0.009	0.02736	0.523	0.522	0.376
5' - 4	3.0	0.5	0.0	0.5	2.5	1.0	1.027	0.045	0.01792	0.513	0.514	0.376
6' - 1	0.0	1.0	0.0	0.5	1.0	1.0	0.993	0.017	0.01745	0.496	0.497	0.376
6' - 2	0.5	0.0	0.0	0.5	2.0	1.0	1.008	0.035	0.01759	0.504	0.504	0.376
6' - 3	0.5	0.5	1.5	0.5	1.0	1.5	1.004	0.018	0.02628	0.502	0.502	0.377
6' - 4	1.0	0.5	1.0	0.0	2.0	1.0	1.000	0.035	0.01745	0.500	0.500	0.375
8' - 1	1.0	0.0	1.5	2.0	3.0	0.5	0.841	0.044	0.00734	0.420	0.421	0.378
8' - 2	1.0	0.0	2.5	3.0	2.0	2.0	0.871	0.030	0.03039	0.435	0.436	0.373
8' - 3	1.0	0.0	4.0	1.0	0.0	1.5	0.905	0.000	0.02369	0.452	0.453	0.374
8' - 4	2.0	2.0	0.0	0.0	0.0	0.0	1.007	0.000	0.00000	0.504	0.503	0.378
8' - 5	0.0	2.0	0.0	0.0	2.0	1.0	0.965	0.034	0.01684	0.482	0.483	0.380
8' - 6	0.5	2.0	0.5	2.0	1.0	0.0	0.917	0.016	0.00000	0.458	0.459	0.383
8'9''	1.0	2.0	1.5	1.5	1.0	2.0	0.895	0.016	0.03124	0.447	0.448	0.380
9'7''-1	0.0	1.0	0.0	1.0	0.0	0.5	0.905	0.000	0.00790	0.452	0.453	0.377
9'7''-2	0.0	1.0	3.0	2.0	3.0	1.5	0.951	0.050	0.02489	0.475	0.476	0.377
12'6''	1.5	1.5	2.5	2.5	0.0	0.5	0.809	0.000	0.00705	0.404	0.404	0.377

Comments: Only minor filing and cleaning required.

Pitot tubes requiring further calibration: None.

pace laboratories, inc

METER BOX
TEMPERATURE SENSOR CALIBRATION DATA FORM
TOLERANCE: +/- 5.4 F

DATE: 07/25/89
AMBIENT TEMPERATURE, F : 72
CALIBRATOR: WQB

BAROMETRIC PRESSURE: 29.419
REFERENCE THERMOMETER # 22 & #5

REFERENCE POINT #		SOURCE	REFERENCE THERMOMETER TEMPERATURE, F	THERMOCOUPLE POTENTIOMETER TEMPERATURE, F	TEMPERATURE DIFFERENCE, %
Meter Box					
1264A	A.	ice bath	35	36	-.20
	B.	water bath	70	69	0.19
	C.	oil bath	122	120	0.34
	D.	oil bath	170	169	0.16
1264B	A.	ice bath	35	36	-.20
	B.	water bath	70	70	0.00
	C.	oil bath	123	124	-.17
	D.	oil bath	171	172	-.16
1348A	A.	ice bath	35	33	0.40
	B.	water bath	70	70	0.00
	C.	oil bath	125	127	-.34
	D.	oil bath	171	171	0.00
1348B	A.	ice bath	35	36	-.20
	B.	water bath	70	70	0.00
	C.	oil bath	126	128	-.34
	D.	oil bath	171	170	0.16
1401A	A.	ice bath	35	36	-.20
	B.	water bath	70	70	0.00
	C.	oil bath	128	128	0.00
	D.	oil bath	172	174	-.32
1401B	A.	ice bath	35	34	0.20
	B.	water bath	70	71	-.19
	C.	oil bath	129	131	-.34
	D.	oil bath	172	172	0.00
1965A	A.	ice bath	35	34	0.20
	B.	water bath	70	69	0.19
	C.	oil bath	130	130	0.00
	D.	oil bath	172	174	-.32
1965B	A.	ice bath	35	35	0.00
	B.	water bath	70	70	0.00
	C.	oil bath	134	136	-.34
	D.	oil bath	172	173	-.16

$$\text{TEMPERATURE DIFFERENCE} = \frac{(\text{REF TEMP, F} + 460) - (\text{TEST TEMP, F} + 460)}{\text{REF TEMP, F} + 460} \times 100 <= 1.5\%$$

pace laboratories, inc

PROBE THERMOCOUPLE
TEMPERATURE SENSOR CALIBRATION DATA FORM
TOLERANCE: +/- 5.4 F

DATE: 07/25/89
AMBIENT TEMPERATURE, F : 72
CALIBRATOR: WGB

BAROMETRIC PRESSURE: 29.419
REFERENCE THERMOMETER #22 & #5

REFERENCE POINT #		SOURCE	REFERENCE THERMOMETER TEMPERATURE, F	THERMOCOUPLE POTENTIOMETER TEMPERATURE, F	TEMPERATURE DIFFERENCE, %
Probe - #					
4'-1	A.	oil bath	92	92	0.00
	B.	oil bath	242	242	0.00
	C.	oil bath	383	385	-.24
4'-2	A.	oil bath	92	92	0.00
	B.	oil bath	242	243	-.14
	C.	oil bath	384	385	-.12
5'-1	A.	oil bath	95	93	0.36
	B.	oil bath	242	243	-.14
	C.	oil bath	392	395	-.35
5'-2	A.	oil bath	97	96	0.18
	B.	oil bath	242	242	0.00
	C.	oil bath	384	385	-.12
6'-1	A.	oil bath	98	97	0.18
	B.	oil bath	242	243	-.14
	C.	oil bath	391	392	-.12
6'-2	A.	oil bath	98	96	0.36
	B.	oil bath	244	246	-.28
	C.	oil bath	385	386	-.12
8'-1	A.	oil bath	100	98	0.36
	B.	oil bath	246	248	-.28
	C.	oil bath	385	385	0.00
8'-2	A.	oil bath	100	99	0.18
	B.	oil bath	246	246	0.00
	C.	oil bath	385	385	0.00
8'-3	A.	oil bath	100	98	0.36
	B.	oil bath	246	248	-.28
	C.	oil bath	385	385	0.00
8' 9"	A.	oil bath	102	101	0.18
	B.	oil bath	247	249	-.28
	C.	oil bath	386	386	0.00
9' 7"	A.	oil bath	102	101	0.18
	B.	oil bath	248	249	-.14
	C.	oil bath	391	392	-.12

$$\text{TEMPERATURE DIFFERENCE} = \frac{(\text{REF TEMP, F} + 460) - (\text{TEST TEMP, F} + 460)}{\text{REF TEMP, F} + 460} \times 100 <= 1.5\%$$

pace laboratories, inc

SAMPLE BOX
TEMPERATURE SENSOR CALIBRATION DATA FORM
TOLERANCE: +/- 5.4 F

DATE: 07/25/89
AMBIENT TEMPERATURE, F : 72
CALIBRATOR: WGB

BAROMETRIC PRESSURE: 29.419
REFERENCE THERMOMETER # 22 & #5

REFERENCE POINT #		SOURCE	REFERENCE THERMOMETER TEMPERATURE, F	THERMOCOUPLE POTENTIOMETER TEMPERATURE, F	TEMPERATURE DIFFERENCE, %
Sample Box					
#1	A.	oil bath	122	121	0.17
	B.	oil bath	200	200	0.00
	C.	oil bath	220	220	0.00
	D.	oil bath	260	260	0.00
	E.	oil bath	287	288	-.13
#2	A.	oil bath	122	122	0.00
	B.	oil bath	200	202	-.30
	C.	oil bath	220	219	0.15
	D.	oil bath	260	260	0.00
	E.	oil bath	287	285	0.27
#3	A.	oil bath	122	121	0.17
	B.	oil bath	200	201	-.15
	C.	oil bath	220	220	0.00
	D.	oil bath	264	265	-.14
	E.	oil bath	289	289	0.00
#4	A.	oil bath	122	123	-.17
	B.	oil bath	200	201	-.15
	C.	oil bath	220	219	0.15
	D.	oil bath	264	264	0.00
	E.	oil bath	290	291	-.13
#5	A.	oil bath	123	123	0.00
	B.	oil bath	200	199	0.15
	C.	oil bath	220	221	-.15
	D.	oil bath	268	268	0.00
	E.	oil bath	291	291	0.00
#6	A.	oil bath	123	124	-.17
	B.	oil bath	200	199	0.15
	C.	oil bath	223	221	0.29
	D.	oil bath	268	266	0.27
	E.	oil bath	291	292	-.13
#7	A.	oil bath	123	124	-.17
	B.	oil bath	200	198	0.30
	C.	oil bath	234	232	0.29
	D.	oil bath	273	275	-.27
	E.	oil bath	294	295	-.13
#8	A.	oil bath	124	124	0.00
	B.	oil bath	200	201	-.15
	C.	oil bath	234	233	0.14
	D.	oil bath	274	275	-.14
	E.	oil bath	296	297	-.13

$$\text{TEMPERATURE DIFFERENCE} = \frac{(\text{REF TEMP, F} + 460) - (\text{TEST TEMP, F} + 460)}{\text{REF TEMP, F} + 460} \times 100 <= 1.5\%$$

pace. laboratories, inc.

IMPINGER
TEMPERATURE SENSOR CALIBRATION DATA FORM
TOLERANCE: +/- 2.0 F

DATE: 07/25/89
AMBIENT TEMPERATURE, F : 72
CALIBRATOR: WGB

BAROMETRIC PRESSURE: 29.419
REFERENCE THERMOMETER # 22 & #5

REFERENCE POINT #		SOURCE	REFERENCE THERMOMETER TEMPERATURE, F	THERMOCOUPLE POTENTIOMETER TEMPERATURE, F	TEMPERATURE DIFFERENCE, %
Impinger					
#1	A.	ice bath	32	32	0.00
	B.	water bath	70	70	0.00
	C.	water bath	95	95	0.00
	D.	water bath	130	130	0.00
#2	A.	ice bath	32	32	0.00
	B.	water bath	70	71	-.19
	C.	water bath	95	95	0.00
	D.	water bath	130	130	0.00
#3	A.	ice bath	32	33	-.20
	B.	water bath	70	70	0.00
	C.	water bath	95	95	0.00
	D.	water bath	130	130	0.00
#4	A.	ice bath	32	33	-.20
	B.	water bath	70	71	-.19
	C.	water bath	95	95	0.00
	D.	water bath	130	131	-.17
#5	A.	ice bath	32	33	-.20
	B.	water bath	71	70	0.19
	C.	water bath	95	95	0.00
	D.	water bath	130	130	0.00

$$\text{TEMPERATURE DIFFERENCE} = \frac{(\text{REF TEMP, F} + 460) - (\text{TEST TEMP, F} + 460)}{\text{REF TEMP, F} + 460} \times 100 <= 1.5\%$$

pace laboratories inc

WET - BULB & DRY - BULB: OMEGA TEMP
TEMPERATURE SENSOR CALIBRATION DATA FORM
TOLERANCE: +/- 5.4 F

DATE: 07/25/89
AMBIENT TEMPERATURE, F : 72
CALIBRATOR: WGB

BAROMETRIC PRESSURE: 29.419
REFERENCE THERMOMETER # 22 & #5

REFERENCE POINT #		SOURCE	REFERENCE THERMOMETER TEMPERATURE, F	THERMOCOUPLE POTENTIOMETER TEMPERATURE, F	TEMPERATURE DIFFERENCE, %
Omega Temp HH-2 #1					
Db1	A.	water bath	70	71	-.19
	B.	oil bath	120	120	0.00
	C.	oil bath	170	171	-.16
	D.	oil bath	220	221	-.15
	E.	oil bath	260	259	0.14
Wb1	A.	water bath	70	70	0.00
	B.	oil bath	120	121	-.17
	C.	oil bath	170	171	-.16
	D.	oil bath	220	219	0.15
	E.	oil bath	260	261	-.14
Omega Temp HH-2 #2					
Db2	A.	water bath	70	71	-.19
	B.	oil bath	120	121	-.17
	C.	oil bath	171	172	-.16
	D.	oil bath	221	222	-.15
	E.	oil bath	262	262	0.00
Wb2	A.	water bath	70	69	0.19
	B.	oil bath	121	122	-.17
	C.	oil bath	171	170	0.16
	D.	oil bath	222	222	0.00
	E.	oil bath	262	261	0.14
Omega Temp 873-F					
Db1	A.	water bath	71	71	0.00
	B.	oil bath	121	122	-.17
	C.	oil bath	173	173	0.00
	D.	oil bath	222	223	-.15
	E.	oil bath	262	263	-.14
Wb1	A.	water bath	72	71	0.19
	B.	oil bath	122	121	0.17
	C.	oil bath	173	174	-.16
	D.	oil bath	222	222	0.00
	E.	oil bath	262	261	0.14
Omega Temp 873-F High Temp					
	A.	oil bath	384	385	-.12
	B.	n. furnace	450	452	-.22
	C.	n. furnace	575	573	0.19
	D.	n. furnace	800	803	-.24
	E.	n. furnace	1140	1143	-.19

$$\text{TEMPERATURE DIFFERENCE} = \frac{(\text{REF TEMP, F} + 460) - (\text{TEST TEMP, F} + 460)}{\text{REF TEMP, F} + 460} \times 100 <= 1.5\%$$

pace laboratories, inc

WET BULB - DRY BULB - NOx & HOT BOX: BIMETALLIC
TEMPERATURE SENSOR CALIBRATION DATA FORM
TOLERANCE: +/- 5.4 F

DATE: 07/25/89
AMBIENT TEMPERATURE, F : 72
CALIBRATOR: WGB

BAROMETRIC PRESSURE: 29.419
REFERENCE THERMOMETER # 22 & #5

REFERENCE POINT #		SOURCE	REFERENCE THERMOMETER TEMPERATURE, F	THERMOCOUPLE POTENTIOMETER TEMPERATURE, F	TEMPERATURE DIFFERENCE, %
Bimetallic					
Wb1	A.	water bath	72	72	0.00
	B.	oil bath	130	130	0.00
	C.	oil bath	185	184	0.16
	D.	oil bath	242	243	-.14
	E.	oil bath	270	272	-.27
Db1	A.	water bath	72	71	0.19
	B.	oil bath	131	130	0.17
	C.	oil bath	185	185	0.00
	D.	oil bath	243	244	-.14
	E.	oil bath	270	271	-.14
Wb2	A.	water bath	72	72	0.00
	B.	oil bath	131	130	0.17
	C.	oil bath	185	184	0.16
	D.	oil bath	243	243	0.00
	E.	oil bath	270	271	-.14
Db2	A.	water bath	72	70	0.38
	B.	oil bath	131	130	0.17
	C.	oil bath	185	186	-.16
	D.	oil bath	243	243	0.00
	E.	oil bath	270	271	-.14
NOx	A.	water bath	72	71	0.19
	B.	oil bath	131	131	0.00
	C.	oil bath	185	186	-.16
	D.	oil bath	243	244	-.14
	E.	oil bath	270	272	-.27
Hot Box	A.	water bath	72	70	0.38
	B.	oil bath	131	130	0.17
	C.	oil bath	185	184	0.16
	D.	oil bath	244	242	0.28
	E.	oil bath	270	269	0.14

$$\text{TEMPERATURE DIFFERENCE} = \frac{(\text{REF TEMP, F} + 460) - (\text{TEST TEMP, F} + 460)}{\text{REF TEMP, F} + 460} \times 100 <= 1.5\%$$

Whatman Inc.

Whatman Inc. • 9 Bridewell Place, Clifton, New Jersey 07014 • Telephone: (201) 777-4825
Telex: 133426 • Cable: REEVEPAP

February 1, 1979

Mr. Paul R. Jenkins, Jr.
Vice-President
Environmental Testing Inc.
1700 University Commercial Place
Charlotte, North Carolina 28213

Dear Mr. Jenkins:

Further to our telephone conversation on January 15, 1979 Reeve Angel Grade 900AF is tested with a Q128 DOP Penetrometer manufactured by the Air Technology Association to measure DOP. This is a more sophisticated unit than that listed in the Federal Register, Part II, Thursday, August 18, 1977, Environmental Protection Agency, Standards of Performance for New Stationary Sources.

Grade 900AF will meet the EPA DOP requirements of 0.05 $\leq$ percent penetration on a 0.3 micron dioctyl phthalate smoke particles as listed on page 41778 of the Federal Register, Vol. 42, No. 160, Thursday, August 18, 1977 under 3. Reagent, 3.1.1 Filters.

I hope this will satisfy your inquiry. If we can be of any further service, please contact us at your convenience.

Very truly yours,

John Zacharias
Vice President
Business Manager, Paper Division, N. A.

JZ/mpm

GCA

GCA CORPORATION
Precision Scientific Group

3737 West Cortland Street
Chicago, Illinois 60647
Telephone: 312-227-2660
Telex: 254028

February 2, 1984

Environmental Testing
1700 University Commercial Place
Charlotte, N.C. 28213

Attn: Mr. Paul Jenkins

Subj: Certification Wet Test Meter

Dear Mr. Jenskins:

In lieu of any printed certification from our company, we offer as follows our statement on the referenced subject.

> "The Wet Test Meter catalog number 63123, has been tested at our plant facilities using a Meter Prover Bottle NBS registration No. 4897. The Meter was found to perform to our advertised specifications of plus or minus 1/2% error in flow rate and conforms to specifications of ASTM D-1071."

Respectfully,

Bob Husberg

Bob Husberg
Supervisor, Customer Service

BH/mg

CORNING

Science Products
Corning Glass Works
Corning, New York 14831 USA
Tel: 607-974-9000

a CORNING Laboratory Sciences Company

November 18, 1986

Mr. Paul Jenkins
Environmental Testing Inc.
1700 University Commercial Place
Charlotte, NC 28213

Dear Mr. Jenkins:

Confirming our telephone conversation, our volumetric apparatus is calibrated in conformance with ASTM Standard E 542.

Very truly yours,

Allen R. Fuller
Product Engineering Supervisor

b10012

METTLER

Weight Traceability Certificate

To: Pace Laboratory Inc
1700 Univ Commercial
Charlotte N.C. 28213

The balances listed below have been serviced by our representative on
Jan 24th 1990

This is to certify that the test weights used are traceable to the National Bureau of Standards.

	Analytical	Precision
METTLER identification number of test weights used:	348	
METTLER calibration date of test weights used:	04/01/89	
National Bureau of Standards test number:	737/0670-Met49	

Model and serial number of balances serviced:

AE163 C57742
H54 677277
AK160 A44922

METTLER Service Representative

Jan 24th 1990
Date of Issue

KIMBLE
Division of
Owens-Illinois

December 11, 1986

Mr. Paul R. Jenkins
Environmental Testing, Inc.
1700 University Commercial Place
Charlotte, North Carolina 28213

REF: Calibration of volumetric glassware
Mr. P. Jenkins letter 12-5-86

Dear Mr. Jenkins,

Volumetric standards, utilized by Kimble for calibration of class A and B laboratory glassware, are designed to meet applicable calibration requirements of ASTM Standard E 542.

Accuracy of balances, weights and thermometers employed for calibration of volumetric standards is traceable to National Bureau of Standards.

Sincerely,

Lew Horan
Standards Dept.

Mike Mollick
Quality Control

cc: Mr. N. DeBello - M.O.
Mr. E. Trasoras - Q.A.

Crystal Avenue Vineland, New Jersey 08360-0230 (609) 692-3600

WALTER H. KESSLER COMPANY, INC.

THERMOMETERS KESSLER HYDROMETERS

ONE-SIXTY HICKS STREET • WESTBURY, LONG ISLAND, NEW YORK • 516 EDGEWOOD 4-4064

MANUFACTURERS CERTIFICATE OF CALIBRATION

This is to certify that the instrument listed below has been tested in our temperature calibration laboratory in accordance with the latest procedures in the finest constant temperature equipment available, against National Bureau of Standards certified master standards.

Certified for: Fisher Scientific Company

Description: Thermometer #15-041D -1/201°C in 0.2° Div Total Immersion

Instrument Serial No. 811 007 Date Certified: January 30, 1981

Reading of This Instrument	Reading of N.B.S. Standard (True Temperature)
+0.02C	0.00C
20.00C	20.00C
40.00C	40.00C
59.96C	60.00C
79.98C	80.00C
100.02C	100.00C
119.92C	120.00C
139.98C	140.00C
160.00C	160.00C
180.00C	180.00C
199.86C	200.00C

The tabulated readings apply provided the ice-point reading taken after exposure for not less than 3 days to a temperature of about 25° C (77° F) is +0.02C . If the ice-point reading is found to be higher (or lower) than stated, all other readings will be higher (or lower) by the same amount.

Serial & Test numbers of National Bureau of Standards certified instruments referenced in certification of the thermometer listed above:

NBS Standard M44165,78A-227,M44451,78A-220,78A-601/602

NBS Test No 176240,219883,176240,219883,219606

WALTER H. KESSLER COMPANY, INC.

Irene Ciccilla

the OMEGA Group

DATE: 12-10-85

CERTIFICATE OF CALIBRATION

CUSTOMER: ENVIRONMENTAL TESTING INC
1700 UNIV COMMERICAL PL
CHARLOTTE NC 28213

Customer Purchase Order: 2861RO
OMEGA Work Order No: SO 511268760
MODEL: HH-2
SERIAL NO: 14403

OMEGA ENGINEERING certifies that the above instrumentation has been calibrated and tested to meet or exceed the published specifications. This calibration and testing was performed using instrumentation and standards that are traceable to the U.S. National Bureau of Standards.

Reference: NATIONAL BUREAU OF STANDARDS TEST NO(s): 36320

Tony D'Inverno
Tony D'Inverno
Supervisor, Instrumentation

CAL-3

OMEGA ENGINEERING, INC.
OMEGA PRESS
OMEGA INTERNATIONAL CORP.
BIOMEGA
One Omega Drive, Box 4047, Stamford, CT 06907-0047 (203) 359-1660 Telex 996404 Cable OMEGA FAX (203) 359-7700

Whatman
AIR POLLUTION FILTERS

TECHNICAL DATA ON

EPM 2000 AIR SAMPLING FILTERS

SELECTED AS THE EPA STANDARD

EPM 2000 is the new Whatman filter which has been specifically developed for use in high volume air samplers, and has been chosen by the EPA for its technical excellence and overall suitability for use in the nationwide network of Hi-Vol air samplers. The high air flow rate and excellent particle retention characteristics make EPM 2000 the filter of choice for high volume sampling.

- Specifically developed for use with high volume air samplers.
- Chosen by the EPA for their National Air Surveillence Network (Contract No. 68-02-3709).
- Manufactured from 100% borosilicate glass microfibres under strictly controlled conditions.
- Retention efficiency 99.999% for NaCl particles, mass median 0.6 microns.
- Heat-treated after manufacture to remove organic traces.
- No binder used in manufacture for maximum purity.
- Each sheet individually numbered for rapid identification and recording.

EPM 2000 – THE STATE OF THE ART FILTER MEDIUM FOR HI-VOL AIR SAMPLING

Today, more than ever before, concern over the potential effects on human life of toxic particulates in the air, is running high. The sampling and analytical methods employed in the monitoring of air quality are becoming ever more sophisticated.

EPM 2000, as successor to the popular EPM 1000, has been developed to complement these methods as a technically advanced air filtration medium, suitable for both quantitative and qualitative measurements.

HIGH PURITY – HIGH PERFORMANCE

The EPA place specific requirements on the purity and performance of the glass microfibre filters which are used throughout their National Air Surveillence Network of pollution monitoring stations.

EPM 2000 is manufactured from 100% pure borosilicate glass microfibres, with no added binder, under strictly controlled conditions. Maximum purity is ensured by the use of heat treatment after manufacture to remove any traces of organic material which may interfere with subsequent analyses, and closely monitored quality assurance methods are employed. Detailed chemical analyses of trace pollutants can thus be carried out with utmost accuracy and minimum background interference.

EPM 2000 offers high flow rates while simultaneously providing exceptionally high particle retention efficiencies. Complete reliance can be placed on EPM 2000 to provide optimum results in airborne particulate collection.

Each 8" × 10" sheet of EPM 2000 is individually numbered for rapid identification and recording.

AVAILABILITY

Two sizes are available as standard

8" x 10" sheets (packs of 100)	Cat. No. 1882 866
4.7 cm circles (packs of 100)	Cat. No. 1882 047

PUBLICATION NO 888 EPM A