Note: This is a reference cited in *AP 42, Compilation of Air Pollutant Emission Factors, Volume I Stationary Point and Area Sources.* AP42 is located on the EPA web site at www.epa.gov/ttn/chief/ap42/

The file name refers to the reference number, the AP42 chapter and section. The file name "ref02_c01s02.pdf" would mean the reference is from AP42 chapter 1 section 2. The reference may be from a previous version of the section and no longer cited. The primary source should always be checked.

8.10 BR
CH.4 #3
PUP

TEXAS AIR CONTROL BOARD

6330 HWY. 290 EAST, AUSTIN, TEXAS 78723, 512/451-5711

DICK WHITTINGTON, P.E.
CHAIRMAN

BOB G. BAILEY
VICE CHAIRMAN

ALLEN ELI BELL
EXECUTIVE DIRECTOR

JOHN L. BLAIR
MARCUS M. KEY, M.D.
OTTO R. KUNZE, Ph.D., P.E.
HUBERT OXFORD, III
WILLIAM H. QUORTRUP
C. H. RIVERS
MARY ANNE WYATT

To: MV 2/5/90 R7-273
From: DH

Please review the attached report. The BAQC Review of the ~~report~~ sampling is also attached.

Dr 8.10.4.3

Tx.

Dr.

R7-273

Compliance Test Report
on
SULFUR EMISSIONS
at a
SULFURIC ACID PLANT

Prepared For

Rhone Poulenc

Houston, Texas

December 1989

Prepared by

Cubix Corporation

P.O. Box 5083, Austin, Texas 78763 □ (512) 444-5830

RECEIVED
JAN 26 1990
REGION 7
TEXAS AIR CONTROL BOARD

INVESTIGATOR REPORT

BUREAU OF AIR QUALITY CONTROL

TYPE OF INVESTIGATION Stack Test
Investigation #431264

DATE December 14 - 15, 1989

TIME _____ TO _____

SOURCE NAME Rhone - Poulenc Chemical Co.

SITE NAME _____

SITE ADDRESS 8615 Manchester

PHONE _____

MAIL ADDRESS P. O. Box 5275, Houston, Tx 77262

SOURCE CONTACT Ken Kirskey

TITLE Environmental Manager

PREMISES USED FOR Sulfuric acid manufacture

TYPE OF POLLUTANT H_2SO_4, SO_2, and NO_x

SAMPLE _____

STATUS Undetermined

VIOLATION _____

REFERRAL _____

INVESTIGATED BY Shan Siddiqi / Hal Nichols ~~Shan Siddiqi, P.E./ Hal Nichols, P.E.~~

TITLE Engineers IV

SUPERVISOR DDesai
Dipak V. Desai, P.E.

NARRATIVE AND SUPPORT DATA

From December 12 thru 15, 1989 this company conducted stack compliance tests to estimate emissions of sulfuric acid mist from Regenerator No. 2 stack (for State Regulations compliance). Also, Unit No. 8 was tested for acid mist, SO_2 and NO_x emissions. Mr. Ken Kirskey was present along with Bureau personnel to observe sampling procedures for Unit #8 (Permit C-19282).

The test on the Unit No. 8 stack was conducted at two different process capacities. This unit will be retested after installation of a new catalytic reactor to ensure there is no net increase in emisssions after installation.

The following data was recorded in the control room monitors during the test:

Test date.....	Dec. 14, 1989	Dec. 15, 1989
Acid production rate, tons/day	1254	1689
Fire box temperature, ^oF	1687	1880
SO_2 monitor reading, ppm	1910	1870
~~Blower speed, RPM~~	2700	3700

The sample probe was made of borosilicate glass at the tip of which was a stainless steel nozzle. We did not observe any dents or nicks on the probe. These checks were made before and after the tests.

EPA Method 8 was used to determine H_2SO_4 and SO_2 concentration where 3 samples were taken for each capacity. Each sample required 84 minutes (12 samples x 7 minutes each sample). They were sampling at an average rate of .59 $ft.^3$ per minute and obtaining an average sample volume of 44.64 $ft.^3$.

Samples to be analyzed for NO_x concentration were collected in mylar bags coated with aluminum; the rate of collection was about 0.2 l per minute, for 30 minutes.

Sulfuric acid and sulfur dioxide content of the stack gases were determined by titration with barium perchlorate solution. Periodically slight turbidity was observed in burette (barium perchlorate solution). Bob Manley checked the normality to ensure there was no change.

EPA method requires H_2SO_4 determination from the solution collected in the first impinger. The solutions of the second and third impinger are collectively used for determination of sulfur dioxide. During titrations (H_2SO_4 determination) it was observed that the solution consumed an enormous quantity of barium perchlarate.

Next day Mr. Manley clarified this discrepancy. Instead of using the first impinger solution to determine H_2SO_4, he had used the third impinger. Mr. Manley inquired if the sample would be acceptable. We told him that we do not approve deviations from the Standard EPA procedures. In our opinion this particular sample should be rejected because of the following reasons:

(a) SO_2 determination procedure requires combination of soulutions of impingers 2 and 3. Solution taken only from impinger 3 will give erroneous results.

ontinue

(b) The filter paper was added to the solution for SO_2 determination instead of H_2SO_4 concentration determination. This is yet another factor contributing to errors in estimation.

From the pretest meeting it appears that the company (Cubix) planned to analyze NO_x on site and in their lab (in Austin) and show that there was no degradaton of the sample. Yet during actual tests, NO_x was not analyzed on site.

City of Houston Bureau of Air Quality Control was not informed about the pretest meeting by the TACB or (this company).

It is highly recommended that in order for COH Engineers to participate and provide adequate evaluation of such stack tests, the TACB Stack Test Personnel and/or the company directly informs us of pretest meetings in advance.

SS:HN:lqg

VELOCITY TRAVERSE POINT LAYOUT

(Method 1, nonparticulate, circular stacks)

Date: 12/14/89

Plant: Pham Power

Stack: Unit #8

Technician: BCM KJ

Stack I.D. 173.7 in.

Port Extension 9.75 in.

Stack Area (A) 164.6 ft^2

Stack Diagram (side view)

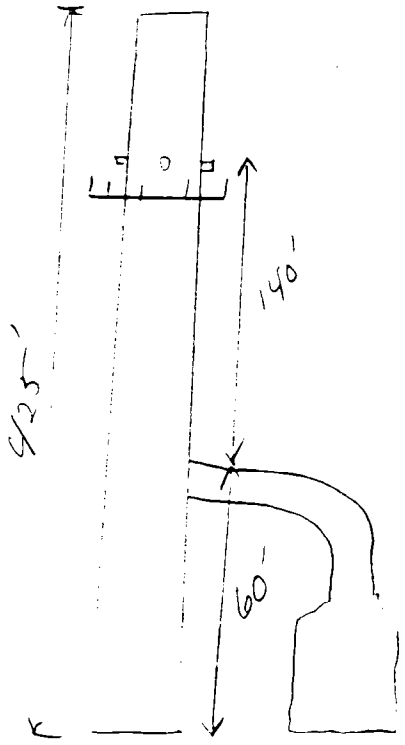

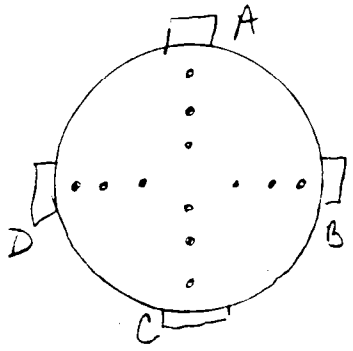

Traverse Point Number	Column A Length Factor (K_L)	Column B (K_L) x (stack ID)
1	4.4	7.64 - 17.4
2	14.6	25.41 35.1
3	29.6	51.4 64.2
4	70.4	
5	85.4	
6	95.6	
7		
8		
9		
10		
11		
12		

1) Measure from the tip of the pitot tube a distance equal to the port extension and mark this as a reference point.

2) Measure the distances in column B from the reference point to the traverse points.

Stack Velocity and Flow Rate Worksheet

Date 12-14 [illegible]
Plant: Rhone Poulenc
Stack: UNIT #8
Technician(s): [illegible]
Test Run No.: P-1
Time Start: [illegible] Stop [illegible]

Pitot Tube No. [illegible]
Pitot Tube Factor (Kp) [illegible]
Atm. Press (Pb) 30.72 in. Hg
Avg. Stack Temp.(Ts) [illegible] °F
Stack Gas Mol. Wt. _____ lb/lb-mole
Stack Static Pressure (Pg) [illegible] in H_2O
Stack Area (A) _____ ft^2

Traverse Point	ΔP (inches H_2O) A	B
1	[illegible]	[illegible]
2	[illegible]	[illegible]
3	[illegible]	[illegible]
4	[illegible]	[illegible]
5	[illegible]	[illegible]
6	[illegible]	[illegible]
7	[illegible]	[illegible]
8	_____	_____
9	_____	_____
10	_____	_____
11	_____	_____
12	_____	_____

Absolute Stack Pressure (Ps)

$Ps = Pb + (Pg \times 0.0735)$

_____ = _____ + (_____ x 0.0735)

Average $\sqrt{\Delta P}$

$$\text{Average } \Delta P = \frac{\Sigma \sqrt{\Delta P}}{\text{No. of Traverse Points}}$$

$$_____ = \frac{(_____)}{(_____)}$$

Stack Velocity (V)

$$V = 5128.8 \times Kp \times \text{Average}\sqrt{\Delta P} \times \sqrt{\frac{Ts}{Ps \times MW}}$$

$$_____ \text{ft/min} = 5128.8 \times _____ \times _____ \times \sqrt{\frac{_____ \text{°F} + 460}{_____ \text{in Hg} \times _____ \text{MW}}}$$

Stack Volumetric Flow, Qa, (at stack conditions)

$Qa = V \times A$

_____ acfm = _____ ft/min x _____ ft^2

Stack Volumetric Flow, Qd, (dry basis at 68 °F and 29.92 in Hg)

$$Qd = Qa \times 1059 \times \frac{Ps}{Ts} \times Fd$$

$$_____ \text{scfh} = _____ \text{acfm} \times 1059 \times \frac{_____ \text{in. Hg}}{_____ \text{°F} + 460} \times _____ Fd$$

EPA Method 5 Stack Sampling Data Sheet

Plant Name:	[illegible]	Stack Height:	400'
Date:	12/14/89	Stack Diameter:	172.7
Source:	Unit 8	Stack moisture (% by volume)	0
Technicians:	R.M. K.J.	Atm. Pressure:	30.62
Probe size:	6'	K Factor:	63.41
Nozzle Area:	0.0017	PTCF:	0.84
Time: Start:	1330	Stop:	1430
Pretest Leak check:	0		

DGM#:			
DGMCF:			
Mol. Wt.	28.67		
Static Pressure:	.13		
Sample Time:	60		
No. of Sample Pts:			
Posttest Leak Check:	0.00		
Meter Reading: Initial:	747.070	Final:	787.310

Impinger Number	1	2	3	4
Contents	70% IPA	60% H.C.		
Initial Wt. (g)				
Final Wt. (g)				

Exhaust Gas Concentrations: CO2 (%): O2 (%):

-25 in Hg

Point	Clock Time	DGM Reading	ΔP (" H2O)	ΔH (" H2O)	Line Vac. ("Hg)	DGM Temp.(°F)	Hot Box Temp.(°F)	Stack Temp.(°F)	Last Imp. Temp.(°F)	Probe Temp.(°F)
1	0:00	747.07	0.040	2.54		65	67	109	53	176
2	5:00	751.08	0.040	2.54		65	68	108	54	178
3	10:00	754.64	0.038	2.40		68	70	109	54	174
4	15:00	758.09	0.038	2.40		72	72	108	55	177
5	20:00	761.39	0.030	1.90		73	73	107	56	179
6	25:00	764.680	0.028	1.78		75	74	108	58	180
7	30:00	767.851	0.025	1.58		76	78	109	60	180
8	35:00	771.20	0.020	1.27		80	74	108	62	181
9	40:00	774.581	0.021	1.33		83	75	107	64	182
10	45:00	777.050	0.020	1.27		86	76	108	66	187
11	50:00	780.750	0.065	4.0		88	76	107	65	180
12	55:00	783.720	0.040	2.54		92	76	108	66	178
	60:00	787.310	0.035	2.22		96	76	101	65	176
Totals or Avgs.						184		108		

Testing by Cubix Corporation

EPA Method 5 Stack Sampling Data Sheet

Plant Name:	Rhone Poulenc	Stack Height:	400'
Date:	12/14/91	Stack Diameter:	173.7
Source:	UNIT 8	Stack moisture (% by volume)	0
Technicians:	BCM, KJ, JR	Atm. Pressure:	30.62
Probe size:	6'	K Factor:	2852
Nozzle Area:	405	PTCF:	0.87
Time: Start:	1600	Stop:	1720
Pretest Leak check:	0.00		

DGM#:			
DGMCF:	1.001		
Mol. Wt.	28.64		
Static Pressure:	13		
Sample Time:	84		
No. of Sample Pts:	12		
Posttest Leak Check:	0.00		
Meter Reading: Initial:	773.562	Final:	844.150

Impinger Number	1	2	3	4
Contents	80% IPA	10% H_2O_2	10% H_2O_2	
Initial Wt. (g)				
Final Wt. (g)				

Exhaust Gas Concentrations: CO2 (%): O2 (%):

Start → 773.562 0.040 1.14

Point	Clock Time	DGM Reading	ΔP ("H2O)	ΔH ("H2O)	Line Vac. ("Hg)	DGM Temp.(°F)	Hot Box Temp.(°F)	Stack Temp.(°F)	Last Imp. Temp.(°F)	Probe Temp.(°F)
1	1600	773.621	0.040	1.14		81	69	109	52	176
2	1400	[illegible]	0.025	[illegible]		[illegible]	69	[illegible]	[illegible]	178
3	21	[illegible]	0.035	[illegible]		[illegible]	[illegible]	[illegible]	50	176
4	[illegible]								53	
5	[illegible]	818.66	.20	0.57		91	77	[illegible]	52	
6	42	813.940	.020	0.57		92	76	[illegible]	55	179
7	47	817.17	.025	0.99		92	49	109	[illegible]	[illegible]
8	56	821.21	0.04	1.14		92	80	109	50	175
9	62	825.450	0.045	0.96		93	70	100	54	180
10	72	[illegible]	0.05	1.57		94	77	[illegible]	55	182
11	77	[illegible]	.045	1.29		99	74	107	54	175
12	84	[illegible]	0.040	1.14		90	75	107	55	175
		844.150	.10	1.14		90	74	[illegible]	54	170
Totals or Avgs.						92.4		108		

Testing by Cubix Corporation

EPA Method 5 Stack Sampling Data Sheet

Plant Name:	Rhone Poulenc		
Date:	12/14/89		
Source:	Unit 8		
Technicians:	BCM, [illegible], JP		
Probe size:	6'	Run#: 3	Box#: 3
Nozzle Area:	0.000855	Filter #: N/A	
Time: Start:	1545	Stop: 1715	
Pretest Leak check:	0.00		

Stack Height:	400'	DGM#:	
Stack Diameter:	173.7	DGMCF:	1.001
Stack moisture (% by volume)		Mol. Wt.	28.9[illegible]
Atm. Pressure:	30.62	Static Pressure:	[illegible]
K Factor:	63.47	Sample Time:	89
PTCF:	0.84	No. of Sample Pts:	12
Posttest Leak Check:	0.00		
Meter Reading: Initial:	899.913	Final:	890.11

Impinger Number	1	2	3	4
Contents	[illegible]	[illegible]	[illegible]	[illegible]
Initial Wt. (g)				
Final Wt. (g)				

Exhaust Gas Concentrations: CO2 (%): O2 (%):

Point	Clock Time	DGM Reading	ΔP (" H2O)	ΔH (" H2O)	Line Vac. ("Hg)	DGM Temp.(°F)	Hot Box Temp.(°F)	Stack Temp.(°F)	Last Imp. Temp.(°F)	Probe Temp.(°F)
1	0.00	899.913	0.05	1.13		91	54	106	41	13[illegible]
2	7.00	849.000	[illegible]	1.14		91	53	109	51	[illegible]
3	14	854.07[illegible]	[illegible]	1.14		93	55	110	52	[illegible]
4	21	859.[illegible]	[illegible]	0.99		93	54	112	[illegible]	[illegible]
5	28	[illegible]	[illegible]	0.99		96	57	[illegible]	[illegible]	136
6	[illegible]	[illegible]	[illegible]	0.99		95	56	[illegible]	[illegible]	[illegible]
7	42	[illegible]	[illegible]	0.72		97	60	[illegible]	[illegible]	[illegible]
8	[illegible]	[illegible]	0.62	0.57		98	61	111	[illegible]	131
9	[illegible]	[illegible]	[illegible]	0.57		99	62	110	61	[illegible]
10	[illegible]	[illegible]	[illegible]	0.72		99	63	109	62	[illegible]
11	[illegible]	[illegible]	0.20	0.57		99	64	115	[illegible]	[illegible]
12	[illegible]	[illegible]	0.20	0.57		98	64	111	[illegible]	[illegible]
	[illegible]	[illegible]	[illegible]	[illegible]		91	[illegible]	[illegible]	[illegible]	17[illegible]
Totals or Avgs.						96.1		[illegible]		

Testing by Cubix Corporation

Stack Velocity and Flow Rate Worksheet

Date 12/15/89
Plant: [illegible]
Stack: Unit #8
Technician(s): [illegible]
Test Run No.:: P-2
Time Start: _____ Stop _____

Pitot Tube No. S-type
Pitot Tube Factor (Kp) 0.84
Atm. Press (Pb) 30.56 in. Hg
Avg. Stack Temp.(Ts) 102 °F
Stack Gas Mol. Wt. 28.66 lb/lb-mole
Stack Static Pressure (Pg) _____ in H_2O
Stack Area (A) _____ ft^2

Traverse Point	ΔP (inches H_2O) A	B
1	[illegible]	[illegible]
2	[illegible]	[illegible]
3	[illegible]	_____
4	[illegible]	_____
5	[illegible]	_____
6	[illegible]	_____
7	[illegible]	_____
8	_____	_____
9	_____	_____
10	_____	_____
11	_____	_____
12	_____	_____

Absolute Stack Pressure (Ps)

$Ps = Pb + (Pg \times 0.0735)$

_____ = _____ + (_____ x 0.0735)

Average $\sqrt{\Delta P}$

$$\text{Average } \Delta P = \frac{\Sigma \sqrt{\Delta P}}{\text{No. of Traverse Points}}$$

$$_____ = \frac{(_____)}{(_____)}$$

Stack Velocity (V)

$$V = 5128.8 \times Kp \times \text{Average}\sqrt{\Delta P} \times \sqrt{\frac{Ts}{Ps \times MW}}$$

$$_____ \text{ft/min} = 5128.8 \times _____ \times _____ \times \sqrt{\frac{_____ \text{°F} + 460}{_____ \text{in Hg} \times _____ \text{MW}}}$$

Stack Volumetric Flow, Qa, (at stack conditions)

$Qa = V \times A$

_____ acfm = _____ ft/min x _____ ft^2

Stack Volumetric Flow, Qd, (dry basis at 68 °F and 29.92 in Hg)

$$Qd = Qa \times 1059 \times \frac{Ps}{Ts} \times Fd$$

$$_____ \text{scfh} = _____ \text{acfm} \times 1059 \times \frac{_____ \text{in. Hg}}{_____ \text{°F} + 460} \times _____ \text{Fd}$$

EPA Method 5 Stack Sampling Data Sheet

Plant Name:	Rhône Poulenc	Stack Height:	400
Date:	12/15/89	Stack Diameter:	[illegible]
Source:	Unit 8	Stack moisture (% by volume)	[illegible]
Technicians:	KJ, JR, RCM	Atm. Pressure:	30.58
Probe size:	6"	K Factor:	[illegible]
Nozzle Area:	0.00076	PTCF:	5.84
Time: Start:	[illegible]	Pretest Leak check:	[illegible]

DGM#:			
DGMCF:	1.001		
Mol. Wt.			
Static Pressure:	43		
Sample Time:	66		
No. of Sample Pts:	12		
Posttest Leak Check:	0.00		
Meter Reading: Initial:	860.940	Final:	935.640

Impinger Number	1	2	3	4
Contents	80% IPA	[illegible]	[illegible]	[illegible]
Initial Wt. (g)				
Final Wt. (g)				

Exhaust Gas Concentrations: CO2 (%): O2 (%):

Point	Clock Time	DGM Reading	Δ P (" H2O)	ΔH (" H2O)	Line Vac. ("Hg)	DGM Temp.(°F)	Hot Box Temp.(°F)	Stack Temp.(°F)	Last Imp. Temp.(°F)	Probe Temp.(°F)
						[illegible]		[illegible]	[illegible]	
		[illegible]		[illegible]		[illegible]	[illegible]	[illegible]	[illegible]	
		[illegible]	[illegible]	[illegible]		[illegible]		[illegible]	[illegible]	[illegible]
							[illegible]		[illegible]	[illegible]
		[illegible]		[illegible]		[illegible]	[illegible]	[illegible]	[illegible]	[illegible]
							[illegible]	[illegible]	[illegible]	[illegible]
			[illegible]	[illegible]		[illegible]	[illegible]	[illegible]	[illegible]	[illegible]
		[illegible]	[illegible]	[illegible]		[illegible]	[illegible]	[illegible]		[illegible]
		[illegible]				[illegible]	[illegible]	[illegible]		[illegible]
		[illegible]		[illegible]			[illegible]	[illegible]	[illegible]	
	[illegible]	[illegible]	[illegible]	[illegible]		[illegible]	[illegible]	[illegible]		[illegible]
	[illegible]	[illegible]		[illegible]		[illegible]	[illegible]	[illegible]	[illegible]	[illegible]
			[illegible]	[illegible]		[illegible]		[illegible]	[illegible]	[illegible]
Totals or Avgs.						69		123	64	

Testing by Cubix Corporation

EPA Method 5 Stack Sampling Data Sheet

Plant Name:	[illegible]	Stack Height:	400'
Date:	12.15.89	Stack Diameter:	173.2
Source:	Unit 8	Stack moisture (% by volume)	0
Technicians:	K.J. JR DCM	Atm. Pressure:	30.58
Probe size:	6'	K Factor:	18.53
Nozzle Area:	0.00076	PTCF:	0.84
Time: Start:	11:30	Stop:	13:00
Pretest Leak check:	0.00		

DGM#:			
DGMCF:	[illegible]		
Mol. Wt.			
Static Pressure:	[illegible]		
Sample Time:	66		
No. of Sample Pts:	12		
Posttest Leak Check:	[illegible]		
Meter Reading: Initial:	[illegible]	Final:	978.665

Impinger Number	1	2	3	4
Contents	80% IPA	60% H_2O_2	60% H_2O_2	Silgel
Initial Wt. (g)				
Final Wt. (g)				

Exhaust Gas Concentrations: CO2 (%): O2 (%):

Point	Clock Time	DGM Reading	Δ P (" H2O)	ΔH (" H2O)	Line Vac. ("Hg)	DGM Temp.(°F)	Hot Box Temp.(°F)	Stack Temp.(°F)	Last Imp. Temp.(°F)	Probe Temp.(°F)
1	[illegible]	[illegible]	0.020	1.46	-11	77		127	53	143
[illegible]	30	[illegible]	0.010	[illegible]		79		[illegible]	[illegible]	145
	1:05	[illegible]	[illegible]	1.4[illegible]		[illegible]	[illegible]	[illegible]	[illegible]	[illegible]
[illegible]	[illegible]	[illegible]	[illegible]	[illegible]		[illegible]	[illegible]	[illegible]	57	[illegible]
[illegible]		149.910	[illegible]	0.64		[illegible]	[illegible]	[illegible]	56	[illegible]
[illegible]	[illegible]	[illegible]	[illegible]			[illegible]	[illegible]	[illegible]	56	[illegible]
	23[illegible]	155.010	[illegible]						[illegible]	170
[illegible]	[illegible]	[illegible]	[illegible]	1.54		[illegible]	80	[illegible]	58	173
	[illegible]	[illegible]	0.010	1.65		85	81	[illegible]	60	172
[illegible]	4930	[illegible]	[illegible]	1.82		[illegible]	[illegible]	[illegible]	62	156
[illegible]	[illegible]	[illegible]	[illegible]	[illegible]		[illegible]	[illegible]	[illegible]	[illegible]	158
[illegible]	[illegible]	[illegible]	[illegible]	[illegible]		88	[illegible]	[illegible]	65	166
		[illegible]	0.075	[illegible]		[illegible]	[illegible]	[illegible]	[illegible]	[illegible]
Totals or Avgs.						83		124		

Testing by Cubix Corporation

EPA Method 5 Stack Sampling Data Sheet

Plant Name:	Rhône Poulenc	Stack Height:	400'
Date:	12 15 89	Stack Diameter:	173.7
Source:	UNIT 8	Stack moisture (% by volume)	0
Technicians:	[illegible]	Atm. Pressure:	30.58
Probe size:	[illegible]	K Factor:	1823
Nozzle Area:	0.00076	PTCF:	0.84
Time: Start:	[illegible]	Stop:	[illegible]
Pretest Leak check:	0.02	Posttest Leak Check:	0.02
		Meter Reading: Initial:	[illegible]

DGM#:	[illegible]		
DGMCF:	1.001		
Mol. Wt.			
Static Pressure:	0.41		
Sample Time:	5 [illegible]		
No. of Sample Pts:	12		
Final:	[illegible]		

Impinger Number	1	2	3	4
Contents	80% IPA	6% H_2O_2	6% H_2O_2	Silica
Initial Wt. (g)	N/A	"	"	"
Final Wt. (g)	N/A	"		"

Exhaust Gas Concentrations: CO2 (%): O2 (%):

Point	Clock Time	DGM Reading	ΔP (" H2O)	ΔH (" H2O)	Line Vac. ("Hg)	DGM Temp.(°F)	Hot Box Temp.(°F)	Stack Temp.(°F)	Last Imp. Temp.(°F)	Probe Temp.(°F)
1	[illegible]	[illegible]	0.10	1.52		[illegible]	75	[illegible]	53	97
	[illegible]	[illegible]	[illegible]	[illegible]		[illegible]	76	[illegible]	55	[illegible]
	[illegible]	[illegible]	[illegible]	1.46		[illegible]	82	[illegible]	56	160
		[illegible]	[illegible]	1.27		79	82	[illegible]	[illegible]	155
		[illegible]	[illegible]	[illegible]		[illegible]	[illegible]	[illegible]	[illegible]	[illegible]
	[illegible]	[illegible]	[illegible]	1.13		[illegible]	75	[illegible]	[illegible]	[illegible]
	[illegible]	[illegible]	[illegible]	[illegible]		79	[illegible]	[illegible]	[illegible]	138
	[illegible]	[illegible]	0.35	0.64		78	79	[illegible]	[illegible]	170
	[illegible]	[illegible]	[illegible]	[illegible]		[illegible]	69	116	61	[illegible]
	[illegible]	014 790	[illegible]	[illegible]		[illegible]	68	[illegible]	[illegible]	[illegible]
	[illegible]	017.631	[illegible]	1.55		[illegible]	68	[illegible]	[illegible]	20
	[illegible]	[illegible]	[illegible]	[illegible]		78	63	[illegible]	64	135
	[illegible]	[illegible]	[illegible]	[illegible]		[illegible]	64	[illegible]	65	133
Totals or Avgs.						77.7		120.5		

Testing by Cubix Corporation

Preliminary Summary of Results

12/14/89
Rhone Poulenc
Regen 2
Technicians: BCM, KJ, JR
Regen #2

Run No.	**C-1**	**C-2**	**C-3**	**Average**
Start Time	1236	1600	1825	
Stop Time	1500	1730	1955	
OPERATING DATA				
Fire Box Temperture (°F)	2000	2000	2000	**2000**
SO2 Monitor Reading (ppmv)	2400	2400	2400	**2400**
Acid Production (short tons)	700	700	700	**700**
Blower Speed (RPM)	3590	3575	3580	**3582**
Stack Velocity (SCFH)	3134976	3123359	2752325	**3003553**
SAMPLING DATA				
Beginning Meter Reading (ft3)	593.375	646.927	702.480	
Ending Meter Reading (ft3)	640.835	695.180	742.430	
Gas Meter Correction Factor	1.001	1.001	1.001	
Meter Temperature (°F)	74	74	63.2	
Meter Pressure (in Hg)	30.71	30.72	30.72	
Volume Sampled (SCF)	48.214	49.036	41.436	**46**
Normality of Titrant (N)	0.011	0.011	0.011	
ACID MIST				
Volume Collected (ml)	254.0	250.0	250.0	
Aliquot (ml)	100.0	100.0	100.0	
Average Titrant Volume (ml)	10.6	7.2	17.5	
SO2				
Volume Collected (ml)	100000	10000	10000	
Aliquot (ml)	20.0	10.0	10.0	
Average Titrant Volume (ml)	4.8	27.8	32.8	
EMISSIONS				
Acid Mist Concentration (lbs/dscf)	4.34E-07	2.85E-07	8.20E-07	**5.13E-07**
Acid Mist Concentration (ppmv)	2.61	1.71	4.93	**3.08**
Acid Mist Emissions (lbs/hr)	1.36	0.89	2.26	**1.50**
SO2 Concentration (lbs/dscf)	3.87E-04	4.40E-04	6.15E-04	**4.81E-04**
SO2 Concentration (ppmv)	2323.7	2646.5	3695.1	**2888**
SO2 Emissions (lbs/hr)	1212.1	1375.4	1692.2	**1427**

Testing conducted by CUBIX CORPORATION, Austin, Texas

Field Check of Percent Isokinetic

Sample # C4
Source Unit 8
Company name Rhone Poulenc
Plant Houston, Texas

Step 1

Nozzle Volume at Stack Conditions (ft3)	Corrected Dry Gas Volume (ft3)	Average Stack Temperature (°F)	Average Meter Temperature (°F)	Dry Gas Fraction
50.304	45.645	123	69	1

Step 2

Avg. Corrected Stack Velocity (ft/sec)	Molecular Weight	Stack Pressure ("Hg)	Average $\sqrt{\Delta p}$
15.888	28.64	30.62	0.27138

Step 3

Nozzle Area	Sample Time (minutes)
0.00076	66

% Isokinetic

105.20

Date 12/15/89

Signed

Testing by Cubix Corporation

Field Check of Percent Isokinetic

Sample # ~~C-5~~ C-5
Source Unit 8
Company name Rhone Poulenc
Plant Houston, Texas

Step 1

Nozzle Volume at Stack Conditions (ft3)	Corrected Dry Gas Volume (ft3)	Average Stack Temperature (°F)	Average Meter Temperature (°F)	Dry Gas Fraction
44.777	41.633	124	83	1

Step 2

Avg. Corrected Stack Velocity (ft/sec)	Molecular Weight	Stack Pressure ("Hg)	Average $\sqrt{\Delta p}$
15.677	28.64	30.62	0.26754

Step 3

Nozzle Area	Sample Time (minutes)
0.00076	66

% Isokinetic

94.91

Date 12/15/89

Signed

Testing by Cubix Corporation

Field Check of Percent Isokinetic

Sample # C6
Source Unit 8
Company name Rhone Poulenc
Plant Houston, Texas

Step 1

Nozzle Volume at Stack Conditions (ft3)	Corrected Dry Gas Volume (ft3)	Average Stack Temperature (°F)	Average Meter Temperature (°F)	Dry Gas Fraction
46.199	42.793	120.5	77.7	1

Step 2

Avg. Corrected Stack Velocity (ft/sec)	Molecular Weight	Stack Pressure ("Hg)	Average $\sqrt{\Delta p}$
15.688	28.64	30.62	0.26855

Step 3

Nozzle Area	Sample Time (minutes)
0.00076	66

% Isokinetic

97.85

Date 12/15/89

Signed

Testing by Cubix Corporation

RECEIVED
FEB 5
REGION 7
TEXAS AIR CONTROL BOARD

Compliance Test Report
on
SULFUR EMISSIONS
at a
SULFURIC ACID PLANT

Prepared For

Rhone Poulenc

Houston, Texas

December 1989

Prepared by

TABLE OF CONTENTS

	Page
INTRODUCTION	1
Table 1: Background Data	2
SUMMARY OF RESULTS	4
Table 2: Summary of Results	5
PROCESS DESCRIPTION	7
Figure 1: Sulfuric Acid Plant Process Diagram	8
ANALYTICAL TECHNIQUE	9
Figure 2: Sampling System Diagram	10
QUALITY ASSURANCE ACTIVITIES	13

APPENDICES

A Field Data Sheets and Example Calculations
B Unit Operation Data
C Isokinetic Data Sheets
D Calibration Certifications

INTRODUCTION

Emission tests were conducted on the stack associated with a sulfuric acid plant. The unit tested is designated as Unit 8 and is in service at Rhone Poulenc's Sulfuric Acid Plant in Houston, Harris County, Texas. The purpose of these tests was to determine the compliance status of this source relative to the applicable air quality permits and regulations issued by the Texas Air Control Board (TACB) permit # C-19282. As required by the TACB permit, this was the first test before modifications were made to the plant..

Quantities of sulfuric acid mist (H_2SO_4), sulfur dioxide (SO_2), and nitrogen oxides (NOx) were measured in the stack gas of the unit.

The tests followed the procedures set forth in the Code of Federal Regulations, Title 40, Part 60, Appendix A, Methods 1, 2, 3a, 4, 7e, and 8. Table 1 summarizes the background information pertinent to these tests.

This report has been reviewed and approved for submittal to the Texas Air Control Board by the following representatives:

Cubix Corporation	Douglas D. Wine, P.E. Rhone-Poulenc

TABLE 1
BACKGROUND DATA

Source Owner /Operator:	Rhone Poulenc P.O. Box 5275 8615 Manchester Houston, Texas 77262 Attn: Doug Wene (713) 928-3411
Test Contractor:	Cubix Corporation P.O. Box 5083 Austin, Texas 78763 Attn: Bob Manley (512) 444-5830
Test Participants:	**Rhone Poulenc:** Doug Wene **City of Houston** Shan Siddiqi Hal Nichols Mike Pham **Cubix Corporation** Bob Manley Kevin Janak Joe Rudyk
Test Dates:	December 12-14, 1989
Location:	Rhone Poulenc, 8615 Manchester, Houston, Harris CountyTexas

Process Description:	Type "S" contact sulfuric acid plant.
Emission Point:	Stack of unit (See Appendix A for stack diagram)
Test Methods:	Volumetric Flow, EPA Methods 1 and 2
	Molecular Weight, EPA Method 3a
	H_2SO_4 and SO_2 via EPA Method 8
	NOx emissions via EPA Method 7e
Regulatory Applications.:	TACB Permit No: C-19282

SUMMARY OF RESULTS

The stack gas was tested to determine the quantities of key air contaminants being emitted to the atmosphere. These tests were conducted on December 12 through 14, 1989 at Rhone Poulenc's Sulfuric Acid Plant in Houston, Harris County, Texas. Tests included emission measurements for sulfuric acid mist (H_2SO_4), sulfur dioxide (SO_2) and nitrogen oxides (NOx) at two different production rates. Other measurements made by Cubix included stack temperature, stack flow rate, O_2 concentration, and CO_2 concentration. In addition, the SO_2 emission monitor concentration, sulfuric acid production rate, and other key unit operation data were recorded during the tests.

Table 2 is a summary of the emission test data from the six tests conducted on the unit. Two sets of tests were required at two different production rates. This table also includes the key unit operation data that corresponds to each test run.

During runs C-1 through C-3 when the plant was operating at approximately 1275 short tons per day, the H_2SO_4 mass emissions were found to be at an average rate of 2.29 lbs/hr. The emissions of SO_2 were found to be 1299 lbs/hr. The average NOx emissions were 0.867 lbs/hr. The first run C-1 was omitted from the average calculations due to an error in the sampling train of Method 8. (The first and third impingers were reversed, capturing all sulfur compounds, both SO_2 and acid mist, in the first impinger).

During runs C-4 through C-6 the plant operated at a production rate of approximately 1670 short tons per day. The average emission rates were found to be 1.54 lbs/hour acid mist, 2322 lbs/hour SO_2 and 2.2 lbs/hour NOx.

TABLE 2
SUMMARY OF RESULTS

12/14/89
Rhone Poulenc
Unit 8
Technicians: BCM, KJ, JR

Run No.	C-1	C-2	C-3
Start Time	1330	1600	1745
Stop Time	1430	1724	1915
OPERATING DATA			
Fire Box Temperture (°F)	1695	1696	1697
SO2 Monitor Reading (ppmv)	1940	1910	1960
Acid Production (short tons/day)	1266	1280	1276
Blower Speed (RPM)	2698	2696	2700
Furnace Pressure (in. H2O)	84	83	82
Stack Velocity (SCFH)	5724114	6330236	5615444
SAMPLING DATA			
Beginning Meter Reading (ft3)	747.070	793.562	844.913
Ending Meter Reading (ft3)	787.310	844.150	890.110
Gas Meter Correction Factor	1.001	1.001	1.001
Meter Temperature (°F)	78.4	92.4	96.1
Meter Pressure (in Hg)	30.62	30.62	30.62
Volume Sampled (SCF)	40.426	49.534	43.961
Normality of Titrant (N)	0.010	0.010	0.010
ACID MIST			
Volume Collected (ml)	250.0	250.0	250.0
Aliquot (ml)	0.2	20.0	100.0
Average Titrant Volume (ml)	11.0	3.9	0.8
SO2			
Volume Collected (ml)	500.0	1000.0	1000.0
Aliquot (ml)	10.0	10.0	10.0
Average Titrant Volume (ml)	8.5	148.2	140.0
EMISSIONS			
Acid Mist Concentration (lbs/dscf)	3.60E-04	1.04E-06	4.82E-08
Acid Mist Concentration (ppmv)	1441	4.17	0.19
Acid Mist Emissions (lbs/hr)	2062	6.60	0.27
SO2 Concentration (lbs/dscf)	7.42E-06	2.11E-04	2.25E-04
SO2 Concentration (ppmv)	44.6	1269.6	1351.5
SO2 Emissions (lbs/hr)	42.5	1335.5	1262.7
NOx Concentration (ppmv)	1.8	1.8	1.8
NOx Emissions (lbs/hr)	1.2	1.4	1.2

* Note shaded area indicates voided run.

Testing conducted by CUBIX CORPORATION, Austin, Texas

TABLE 2
SUMMARY OF RESULTS

12/14/89
Rhone Poulenc
Unit 8
Technicians: BCM, KJ, JR

Run No.	C-4	C-5	C-6
Start Time	930	1130	1400
Stop Time	1056	1300	1510
OPERATING DATA			
Fire Box Temperture (°F)	1709	1704	1674
SO2 Monitor Reading (ppmv)	1860	1800	1930
Acid Production (short tons/day)	1675	1658	1675
Blower Speed (RPM)	3703	3702	3700
Furnace Pressure (in. H2O)	169	168	175
Stack Velocity (SCFH)	8736006	8605524	8662904
SAMPLING DATA			
Beginning Meter Reading (ft3)	890.940	936.815	982.250
Ending Meter Reading (ft3)	935.640	978.665	1025.000
Gas Meter Correction Factor	1.001	1.001	1.001
Meter Temperature (°F)	69	83	77.7
Meter Pressure (in Hg)	30.58	30.58	30.58
Volume Sampled (SCF)	45.645	41.633	42.948
Normality of Titrant (N)	0.010	0.010	0.010
ACID MIST			
Volume Collected (ml)	250.0	250.0	250.0
Aliquot (ml)	100.0	100.0	100.0
Average Titrant Volume (ml)	4.5	4.5	4.1
SO2			
Volume Collected (ml)	1000.0	1000.0	1000.0
Aliquot (ml)	1.0	1.0	1.0
Average Titrant Volume (ml)	17.0	15.7	16.7
EMISSIONS			
Acid Mist Concentration (lbs/dscf)	2.61E-07	2.86E-07	2.53E-07
Acid Mist Concentration (ppmv)	1.04	1.14	1.01
Acid Mist Emissions (lbs/hr)	2.28	2.46	2.19
SO2 Concentration (lbs/dscf)	2.63E-04	2.66E-04	2.75E-04
SO2 Concentration (ppmv)	1580.5	1600.3	1650.1
SO2 Emissions (lbs/hr)	2297.4	2291.4	2378.5
NOx Concentration (ppmv)	2.0	2.0	2.3
NOx Emissions (lbs/hr)	2.1	2.1	2.4

Testing conducted by CUBIX CORPORATION, Austin, Texas

PROCESS DESCRIPTION

Rhone Poulenc owns and operates a Sulfuric Acid Plant plant in Houston, Harris County Texas. This plant is a "Type S" contact sulfuric acid plant. The contact process uses a catalyst to oxidize SO_2 to SO_3.

Figure 1 is a simplified block diagram of the process. Combustion air is drawn through a silencer or filter and then passed through a drier before entry into the sulfur burner. In the sulfur burner, molten sulfur is burned with this dried combustion air to form SO_2. The combustion gasses then typically pass though a waste heat boiler for cooling before being transported to various stages of the catalytic converter. After several passes through the converters the stream is passed through an economizer and absorbing tower, where the acid is produced. The nonabsorbed tail gases pass overhead to mist control equipment then exit the 316 foot stack of the unit.

The stack was equipped with four ports located at the 200 foot level. The inside diameter of the stack at this level was 173.7 inches. This is approximately 6 diameters downsteam of a flow disturbance and 12.2 diameters from the stack opening. Appendix A of this report contains a field sketch of the stack configuration.

Figure 1
Sulfuric acid Plant Process Diagram

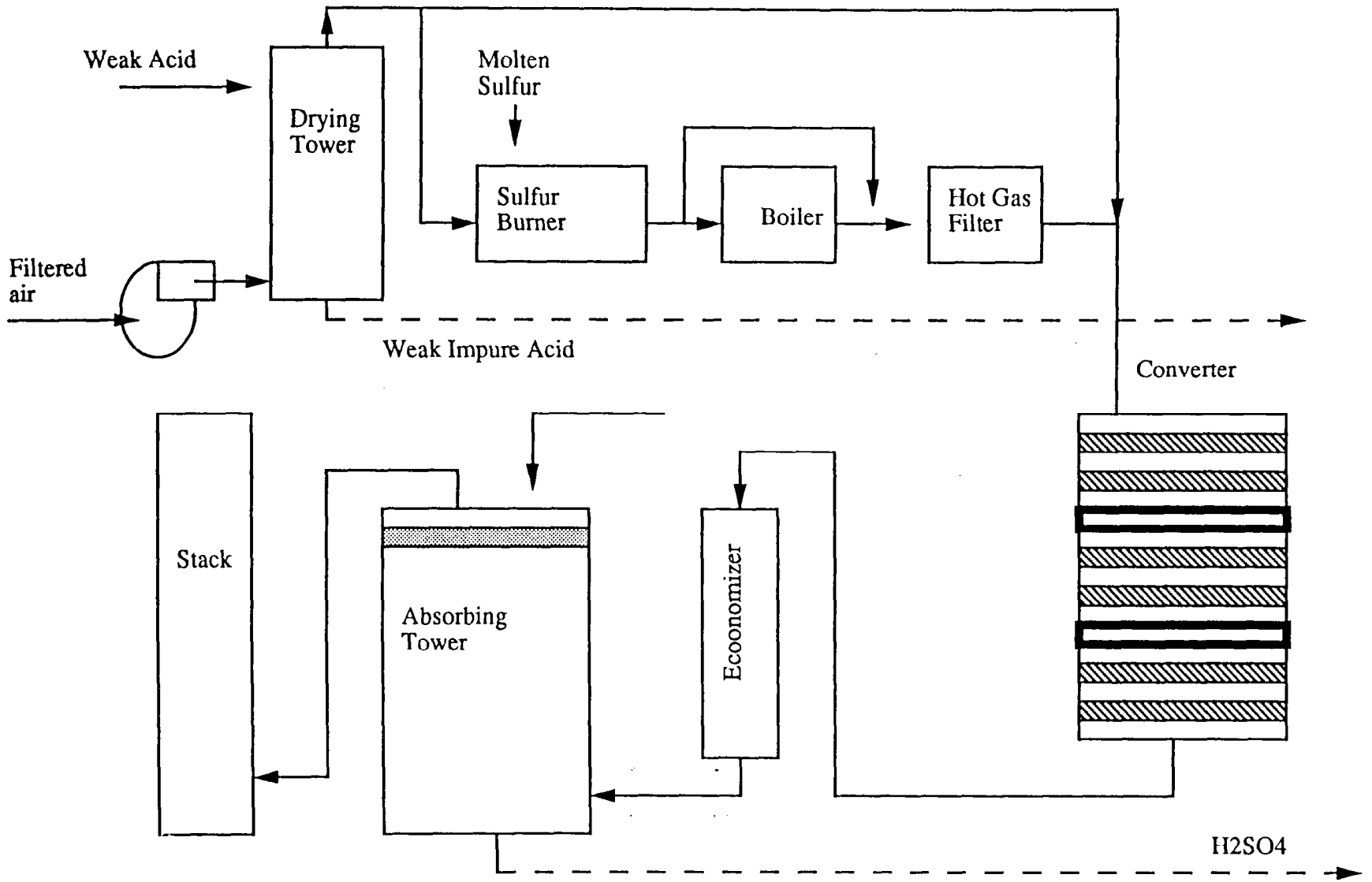

Flow diagram for a typical sulfuric Acid Plant

ANALYTICAL TECHNIQUE

The sampling and analysis procedures used during these tests conformed in principle with those outlined in the Code of Federal Regulations, Title 40, Part 60, Appendix A, the TACB Sampling Procedure Manual, and the TACB Laboratory Methods Manual for the Determination of Air Pollutants. The test procedures and quality assurance activities are discussed below.

A preliminary test run was conducted to determine stack emission parameters such as stack velocity, stack temperature, flue gas molecular weight, and moisture content. These parameters provided data to calculate a K-factor and to allow selection of a nozzle. The nozzle size selected was 0.000855 ft^2 for the first production rate and 0.00076 ft^2 for the last three runs at a lower production rate.

After the preliminary tests were completed, three independent test runs were performed on the unit while the plant was operating at normal production rates. An additional set of three runs were performed while the plant was operating at a lower production rate to satisfy the TACB Permit. The arithmetic average of these test runs is reported as the emission rate from this source.

The sampling and analysis system used to determine sufuric acid mist and SO_2 emission concentrations is depicted in Figure 1. The sampling equipment used was a Nutech Model 2010 sampling train manufactured by Nutech Corporation of Research Triangle Park, North Carolina and conformed with the requirements cf EPA Method 8.

Stack gas enters the system through a heated quartz probe with a stainless steel nozzle. The sample is then passed through the front half of the sampling system which collects sulfuric acid mist. It is composed of an impinger containing 80% IPA and an unheated glass fiber filter. The sample is then transferred through the back half of the sampling system which collects SO_2. The back half contains four impingers. The first two impingers contains approximately 250 ml of 6% hydrogen peroxide, the third impinger is empty, and the fourth contains silica gel desiccant. The exhaust gas is then drawn through an air-tight pump and the gas volume was measured by a calibrated dry gas meter and exhausted.

FIGURE 2

SAMPLING SYSTEM DIAGRAM

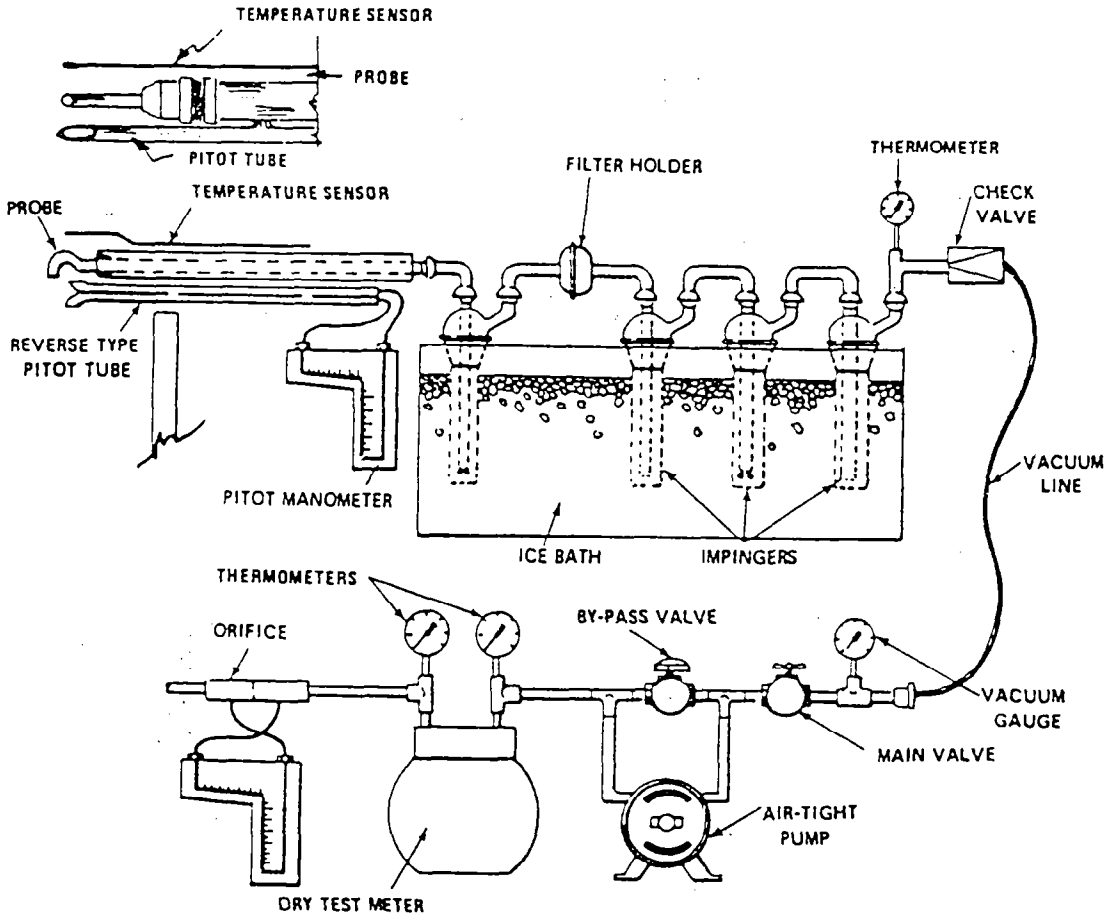

The sample was bubbled through the impinger train at a reduced flow rate of less than 1 liter/minute to maximize absorption efficiency. The total volume of gas sampled was measured with a dry gas meter. After each sample run, the sampling system was purged with sulfur-free air to assure complete absorption of the sulfur compounds.

Upon completion of the purge, aliquots of the collection impingers were titrated in the field with barium chloride to a thorin indicator endpoint. All chemical reagents used in these tests were prepared fresh as required by the test method.

All sample recovery, reagent standardization and sample titrations were completed on site in the Cubix mobile laboratory. This approach eliminated the chance of sample loss during transportation to a laboratory. In addition, this method allowed the City of Houston representative the opportunity to observe the sample recovery and laboratory titrations.

A twelve point sampling traverse was performed on this circular stack during each of 6 test runs. Each point was sampled for 7 minutes for a total of 84 minutes of sampling time. The volume collected was approximately 40 to 50 DSCF. Field data sheets may be found in Appendix A.

All six test runs were conducted isokinetically. The isokinetic percentages for the first three test runs were 90.73%, 107.34%, and 104.35%. The isokinetic percentages for the second set of three test runs were 105.2%, 94.91%, and 98.20%. All six test runs are within the ten percent margin for isokinetic sampling. See Appendix C of this report for isokinetic calculation worksheets.

Stack volumetric flow measurements were conducted in accordance with EPA Methods 1 and 2. Velocity head pressure was taken via a S-type pitot tube at twelve traverse points during each test run. An inclined micro-manometer (0-0.25" range) was used to measure the pressure.

The moisture content of the stack was once determined by EPA Method 4. The five impingers were weighted individually before and after each test run to gravimetricly determine the moisture content of the stack gas. The results of this measurement confirmed zero moisture in the stack as stated in 40 CFR60 Subpart H.

EPA Method 3a was used to determine the O_2 and CO_2 concentrations present in the stack. The samples were collected in aluminized Mylar® and Tedlar® sample bags integrated over thirty minute periods. Instrumental analyses were used in lieu of an Orsat or a Fyrite procedure due to the greater accuracy and precision provided by the instruments. A nondispersive infrared analyzer was used for CO_2 concentration analyses. O_2 concentration analyses were performed via an electrochemical cell analyzer. The instruments were calibrated before and after each test run.

A K-type (chromel-alumel) thermocouple was used in conjunction with a digital thermometer to determine the stack temperature at the sampling ports. This instrument also assisted in monitoring the sampling system conditions (impinger temperature, etc).

Atmospheric pressure was measured at the test site using a certified aircraft-type aneroid altimeter. Atmospheric pressure data collected at ground level were corrected to the elevated sampling site location at the rate of 0.1 inches Hg per 100 ft. above ground level.

QUALITY ASSURANCE ACTIVITIES

EPA Method 8 quality assurance activities began during preparation for sampling. All glassware was thoroughly acid washed, rinsed, dried and stored with protection to prevent contamination. Glass fiber filters were installed into the filter holders and capped with rubber septa. Other filters were sealed against contamination and packed safely. The meter box was checked for proper operation and calibration. Fresh deionized water was brought for the washing of the sampling train. A blank of this water was kept in a sample container and retained for analysis of contaminants.

The SO_2 and H_2SO_4 sampling systems were constructed of materials resistant to reaction with sulfur species. The wet parts of the sampling system were composed of glass, stainless steel and Teflon®.

The sample train was leak checked with the nozzle in place before and after every test run. In all cases the leakage rate was less than 0.02 CFM. Likewise the pitot tube lines were leak checked at 5" of water for a minimum of 15 seconds to ensure that stack pressure head measurements were accurate.

An 8-foot heated quartz probe was used to collect the sample. Buttonhook nozzles were used to sample the gas stream. During sampling, the probe was heated to 248 °F (± 25 °F). The condensate was collected in glass impingers. A standard rotary-vane pump was used to draw the sample from the source, and the amount of gas collected was measured by a recently calibrated dry gas meter.

Following each sample run the sampling trains were purged for a minimum of 15 minutes with sulfur free air. This procedure allowed any SO_2 trapped in the sample probe or first impinger of the sample train to be transferred to the SO_2 sample.

At the completion of each run, the probe, nozzle, filter holder and impingers were washed to remove adhering particulate matter. The front end washes for the three test runs were preserved for analysis and the filter was added for acid mist extraction.

Filter blanks and blanks of all solutions were prepared and analyzed for contaminants in exactly the same manner as the samples were handled and analyzed.

Fresh sampling reagents were prepared fresh the day of the tests. These solutions were prepared from analytical-grade stocks and deionized water. Critical volumetric measurements were made with class A pipets, volumetric flasks and graduated cylinders.

The barium chloride titrant (0.01N) was standardized daily before titrations were conducted. This reagent was standardized against two commercial sulfuric acid standards. All titrations were performed in duplicate to verify the reproducibility of the analysis data.

The absorbing solution from impinger #3 in the sampling train was analyzed separately from the absorbing solutions from impingers #1 & #2. This approach allowed for the determination of the SO_2 trapping efficiency of the first two impingers. The third impinger was diluted and titrated just as the primary SO_2 collection impingers. The analysis results for the efficiency impinger is included in the data sheets in Appendix A of this test report.

The pitot tube lines and manometer used to perform the velocity traverses were checked for leaks at a minimum of 3" (H20) differential pressure for 60 seconds. No leaks were detected.

Multipoint analyzer calibration error tests were performed by introducing zero, mid-range, and high-range calibration gases into each of the analyzers. The criterion for acceptance is ± 2% of the span value difference between the analyzer response and the calibration gas concentration.

The calibration gases used to calibrate the instruments were analyzed and certified by the compressed gas vendors to ± 1% accuracy for THC and to ± 2% accuracy for the remaining gases. EPA Protocol No. 1 was used, where applicable, to assign the concentration values traceable to the National Bureau of Standards, Standard Reference Materials (SRM's). Calibration gas certifications may be found in Appendix D of this report.

Equipment calibrations and certifications may be found in Appendix D of this report.

VELOCITY TRAVERSE POINT LAYOUT

(Method 1, nonparticulate, circular stacks)

Date: 12/14/89

Plant: Rhône Poulenc

Stack: Unit #2

Technician: BCM KJ, JR

Stack I.D. 173.7 in.

Port Extension 9.75 in.

Stack Area (A) 164.6 ft^2

Stack Diagram (side view)

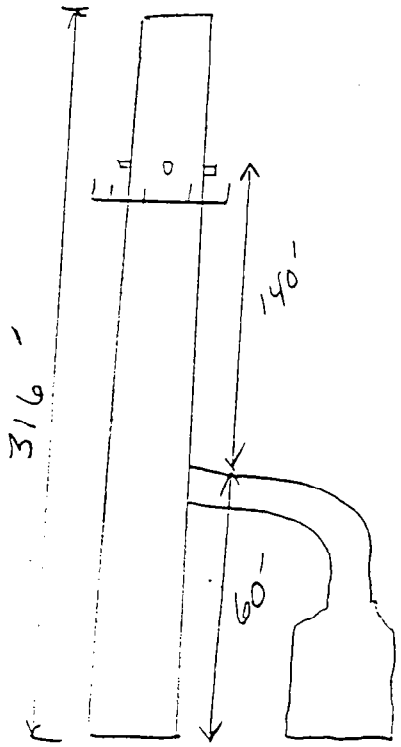

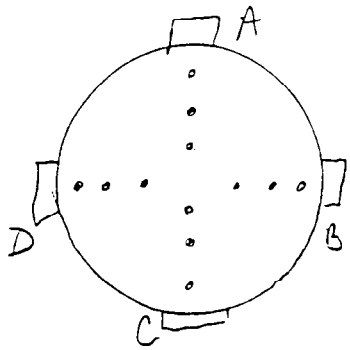

Traverse Point Number	Column A Length Factor (K_L)	Column B (K_L) x (stack ID)
1	4.4	7.4 - 17.4
2	14.6	35.1 35.1
3	29.6	61.2 61.2
4	70.4	132.0
5	85.4	158.1
6	95.6	175.8
7		
8		
9		
10		
11		
12		

1) Measure from the tip of the pitot tube a distance equal to the port extension and mark this as a reference point.

2) Measure the distances in column B from the reference point to the traverse points.

12/14/89
Rhone Poulenc
Unit 8/ Houston, Texas
Technicians: BCM, KJ, JR

Test Run No.	P-1	C-1	C-2	C-3
Stack Moisture & Mol. Wt.				
CO2 (%)	0	0	0	0
O2 (%)	8.50	8.90	8.40	8.70
Beginning Meter Reading (liters)	646.93	747.07	793.56	844.91
Ending Meter Reading (liters)	695.18	787.31	844.15	890.11
Beginning Impinger Wt (g)	2375	2450	2823	2386
Ending Impinger Wt. (g)	2375	2450	2823	2386
Dry Gas Meter Factor (Kd)	1.001	1.001	1.001	1.001
Dry Gas Meter Temp. (°F begin)	87.6	78.4	92.4	96.1
Dry Gas Meter Temp. (°F end)	87.6	78.4	92.4	96.1
Atmospheric Pressure (in Hg, abs.)	30.72	30.62	30.62	30.62
Stack Gas Moisture (% volume)	0	0	0	0
Dry Gas Fraction	1	1	1	1
Stack Gas Mol. Wt. (lbs/lb-mole)	28.34	28.36	28.34	28.35
Pitot Tube Data				
Stack Temperature, Ts (F)	102	108	108	110
Pitot Tube Factor	0.838	0.838	0.838	0.838
ΔP #1	0.028	0.040	0.040	0.050
ΔP #2	0.030	0.040	0.035	0.040
ΔP #3	0.035	0.038	0.035	0.040
ΔP #4	0.035	0.038	0.020	0.035
ΔP #5	0.040	0.030	0.020	0.035
ΔP #6	0.040	0.028	0.055	0.035
ΔP #7	0.030	0.025	0.040	0.025
ΔP #8	0.035	0.020	0.035	0.020
ΔP #9	0.040	0.021	0.055	0.020
ΔP #10	0.030	0.020	0.045	0.025
ΔP #11	0.035	0.035	0.040	0.020
ΔP #12	0.040	0.040	0.040	0.020
Sum of Square Root of ΔP's	2.235279	2.103362	2.325265	2.066769
Number of Traverse Points	12	12	12	12
Average Square Root of ΔP's	0.186273	0.17528	0.193772	0.172231
Average Temperature (°F)	102	108	108	110
Static Pressure (in. H2O)	0.13	0.13	0.13	0.13
Stack Diameter (in.)	173.7	173.7	173.7	173.7
Stack Area (ft2)	164.5614	164.5614	164.5614	164.5614
Stack Velocity (ft/min)	643	609	674	600
Stack Flow,wet (ACFM)	105835	100254	110870	98697
Stack Flow,dry (SCFH)	6127203	5724114	6330236	5615444

12/14/89
Rhone Poulenc
Unit 8/ Houston, Texas
Technicians: BCM, KJ, JR

Test Run No.	P-2	C-4	C-5	C-6
Stack Moisture & Mol. Wt.				
CO2 (%)	0	0	0	0
O2 (%)	8.50	9.00	8.90	9.10
Beginning Meter Reading (liters)	652.30	652.30	652.30	982.25
Ending Meter Reading (liters)	674.52	674.52	674.52	1025.00
Beginning Impinger Wt (g)	2450	2450	2450	2450
Ending Impinger Wt. (g)	2450	2450	2450	2450
Dry Gas Meter Factor (Kd)	1.001	1.001	1.001	1.001
Dry Gas Meter Temp. (°F begin)	64	69	83	77.7
Dry Gas Meter Temp. (°F end)	64	69	83	77.7
Atmospheric Pressure (in Hg, abs.)	30.52	30.52	30.52	30.52
Stack Gas Moisture (% volume)	0	0	0	0
Dry Gas Fraction	1	1	1	1
Stack Gas Mol. Wt. (lbs/lb-mole)	28.34	28.36	28.36	28.36
Pitot Tube Data				
Stack Temperature, Ts (F)	119.7	123	124	120.5
Pitot Tube Factor	0.838	0.838	0.838	0.838
ΔP #1	0.100	0.100	0.080	0.100
ΔP #2	0.095	0.090	0.090	0.090
ΔP #3	0.085	0.070	0.080	0.080
ΔP #4	0.100	0.070	0.040	0.070
ΔP #5	0.105	0.080	0.035	0.080
ΔP #6	0.110	0.100	0.045	0.095
ΔP #7	0.055	0.050	0.065	0.040
ΔP #8	0.060	0.040	0.085	0.035
ΔP #9	0.055	0.050	0.090	0.050
ΔP #10	0.060	0.095	0.100	0.080
ΔP #11	0.065	0.075	0.090	0.085
ΔP #12	0.080	0.080	0.080	0.080
Sum of Square Root of ΔP's	3.384657	3.256587	3.210469	3.222632
Number of Traverse Points	12	12	12	12
Average Square Root of ΔP's	0.282055	0.271382	0.267539	0.268553
Average Temperature (°F)	119.7	123	124	120.5
Static Pressure (in. H2O)	0.43	0.43	0.43	0.43
Stack Diameter (in.)	173.7	173.7	173.7	173.7
Stack Area (ft2)	164.5614	164.5614	164.5614	164.5614
Stack Velocity (ft/min)	992	957	944	945
Stack Flow,wet (ACFM)	163232	157447	155361	155460
Stack Flow,dry (SCFH)	9108581	8736006	8605524	8662904

Stack Velocity and Flow Rate Worksheet

Date 12/15/89
Plant: Rhône Poulenc
Stack: Unit #8
Technician(s): KJ JR
Test Run No.: P-2
Time Start: 8:10 Stop 8:40

Pitot Tube No. S-type
Pitot Tube Factor (Kp) 0.84
Atm. Press (Pb) 30.56 in. Hg
Avg. Stack Temp.(Ts) 102 °F
Stack Gas Mol. Wt. 28.44 lb/lb-mole
Stack Static Pressure (Pg) 0.43 in H_2O
Stack Area (A) 165.1 ft^2

Traverse Point	ΔP (inches H_2O) A	B
	C	A
1	.100	0.055
2	.095	0.060
3	.089	0.055
4	0	0
5	0.100	0.060
6	0.105	0.065
7	0.110	0.080
8		
9		
10		
11		
12		

EXAMPLE CALCULATION

Absolute Stack Pressure (Ps)

$Ps = Pb + (Pg \times 0.0735)$

30.59 = 30.56 + (0.43 x 0.0735)

Average $\sqrt{\Delta P}$

$$\text{Average } \Delta P = \frac{\Sigma \sqrt{\Delta P}}{\text{No. of Traverse Points}}$$

$$0.282620 = \frac{(3.391438)}{(12)}$$

Stack Velocity (V)

$$V = 5128.8 \times Kp \times \text{Average}\sqrt{\Delta P} \times \sqrt{\frac{Ts}{Ps \times MW}}$$

$$978.613636 \text{ ft/min} = 5128.8 \times 0.84 \times 0.282620 \times \sqrt{\frac{102 \text{ °F} + 460}{30.59 \text{ in Hg} \times 28.44 \text{ MW}}}$$

Stack Volumetric Flow, Qa, (at stack conditions)

$Qa = V \times A$

161,569.1113 acfm = 978.613636 ft/min x 165.1 ft^2

Stack Volumetric Flow, Qd, (dry basis at 68 °F and 29.92 in Hg)

$$Qd = Qa \times 1059 \times \frac{Ps}{Ts} \times Fd$$

$$9{,}313{,}168 \text{ scfh} = 161{,}569.1113 \text{ acfm} \times 1059 \times \frac{30.59 \text{ in. Hg}}{102 \text{ °F} + 460} \times 1 \text{ Fd}$$

Stack Velocity and Flow Rate Worksheet

Date: 12-14-89 (Thurs.)
Plant: Rhone Poulenc
Stack: UNIT #8
Technician(s): KJ, JR
Test Run No.: P-1
Time Start: 12:30 Stop 1:00

Pitot Tube No. S-type
Pitot Tube Factor (Kp) 0.84
Atm. Press (Pb) 30.72 in. Hg
Avg. Stack Temp.(Ts) 109 °F
Stack Gas Mol. Wt. 28.64 lb/lb-mole
Stack Static Pressure (Pg) 0.16 in H_2O
Stack Area (A) 165.1 ft^2

Traverse Point	ΔP (inches H_2O) A	B
	C	A
1	0.028	0.030
2	0.020	0.035
3	0.035	0.040
4	0	0
5	0.035	0.020
6	0.040	0.035
7	0.040	0.040
8		
9		
10		
11		
12		

EXAMPLE CALCULATION

Absolute Stack Pressure (Ps)

$Ps = Pb + (Pg \times 0.0735)$

30.73 = 30.72 + (0.16 x 0.0735)

Average $\sqrt{\Delta P}$

$$\text{Average } \Delta P = \frac{\Sigma \sqrt{\Delta P}}{\text{No. of Traverse Points}}$$

0.183625 = (2.203495) / (12)

Stack Velocity (V)

$$V = 5128.8 \times Kp \times \text{Average}\sqrt{\Delta P} \times \sqrt{\frac{Ts}{Ps \times MW}}$$

$$636.083631 \text{ ft/min} = 5128.8 \times 0.84 \times 0.183625 \times \sqrt{\frac{109 \text{ °F} + 460}{30.73 \text{ in Hg} \times 28.64 \text{ MW}}}$$

Stack Volumetric Flow, Qa, (at stack conditions)

$Qa = V \times A$

105,017.4075 acfm = 636.083631 ft/min x 165.1 ft^2

Stack Volumetric Flow, Qd, (dry basis at 68 °F and 29.92 in Hg)

$$Qd = Qa \times 1059 \times \frac{Ps}{Ts} \times Fd$$

$$6{,}006{,}307 \text{ scfh} = 105{,}017.4075 \text{ acfm} \times 1059 \times \frac{30.73 \text{ in. Hg}}{109 \text{ °F} + 460} \times 1 \text{ Fd}$$

EPA Method 5 Stack Sampling Data Sheet

Plant Name:	Rhone Poulenc	Stack Height:	400'
Date:	12/14/89	Stack Diameter:	172.7
Source:	Unit 8	Stack moisture (% by volume)	0
Technicians:	BCM, KJ, JR	Atm. Pressure:	30.62
Probe size:	6"	K Factor:	63.41
Nozzle Area:	0.0017	PTCF:	0.84
Time: Start:	1330	Stop:	1430
Pretest Leak check:	0.00		

DGM#:	1529795		
DGMCF:	1.601		
Mol. Wt.	28.67		
Static Pressure:	.13		
Sample Time:	80		
No. of Sample Pts:	12		
Posttest Leak Check:	0.00		
Meter Reading: Initial:	747.070	Final:	787.310

Impinger Number	1	2	3	4
Contents	80% IPA	60% H_2O_2	150 H_2O_2	[illegible]
Initial Wt. (g)				
Final Wt. (g)				

Exhaust Gas Concentrations: CO2 (%): O2 (%):

-25 in Hg

Point	Clock Time	DGM Reading	ΔP ("H2O)	ΔH ("H2O)	Line Vac. ("Hg)	DGM Temp.(°F)	Hot Box Temp.(°F)	Stack Temp.(°F)	Last Imp. Temp.(°F)	Probe Temp.(°F)
1	0:00	747.07	0.040	2.54		65	67	109	53	176
2	5:00	751.08	0.040	2.54		65	68	108	54	178
3	10:00	754.64	0.038	2.40		68	70	109	54	174
4	15:00	758.09	0.038	2.40		72	72	108	55	177
5	20:00	761.39	0.030	1.90		73	73	107	56	179
6	25:00	764.680	0.028	1.78		75	74	108	58	180
7	30:00	767.851	0.025	1.58		76	78	109	60	180
8	35:00	771.28	0.020	1.27		80	74	108	62	181
9	40:00	774.581	0.021	1.33		83	75	107	64	182
10	45:00	777.050	0.020	1.27		86	76	108	66	187
11	50:00	780.750	0.065	4.00		88	76	107	65	180
12	55:00	783.720	0.040	2.54		92	76	108	66	178
	60:00	787.310	0.035	2.22		96	76	107	65	176
Totals or Avgs.		40.240	0.034	2.16		78.4	73.1	108	59.8	179

Testing by Cubix Corporation

EPA Method 5 Stack Sampling Data Sheet

Plant Name:	Rhone Poulenc	Stack Height:	400'
Date:	12/14/99	Stack Diameter:	173.7
Source:	Unit 8	Stack moisture (% by volume)	0
Technicians:	BCM, KJ, JR	Atm. Pressure:	30.62
Probe size:	6'	K Factor:	28.53
Nozzle Area:	409	PTCF:	0.87
Time: Start:	1600	Stop:	1724
Pretest Leak check:	0.00		

DGM#:	1529795		
DGMCF:	1.001		
Mol. Wt.	28.64		
Static Pressure:	.13		
Sample Time:	84		
No. of Sample Pts:	12		
Posttest Leak Check:	0.00		
Meter Reading: Initial:	793.562	Final:	844.150

Impinger Number	1	2	3	4
Contents	80% IPA	10% H_2O_2	10% H_2O_2	Si Gel
Initial Wt. (g)	NA	-	-	-
Final Wt. (g)	NA	-	-	-

Exhaust Gas Concentrations: CO2 (%): O2 (%):

Point	Clock Time	DGM Reading	ΔP (" H2O)	ΔH (" H2O)	Line Vac. ("Hg)	DGM Temp.(°F)	Hot Box Temp.(°F)	Stack Temp.(°F)	Last Imp. Temp.(°F)	Probe Temp.(°F)
1	1600	793.562	0.040	1.14		84	68	109	52	176
2	1400	798.021	0.035	0.998		87	69	108	50	178
3	21	802.240	0.035	0.998		84	68	108	50	178
4	28	806.170	0.035	0.998		89	68	108	53	178
5	35	810.66	.020	0.57		91	77	109	53	179
6	42	813.940	.020	0.57		92	76	108	55	179
7	49	817.17	.035	0.99		92	69	109	56	180
8	56	821.21	.04	1.14		92	68	109	56	175
9	63	825.560	.035	0.99		93	70	108	54	180
10	70	830.142	.055	1.57		94	77	106	55	181
11	77	834.460	0.045	1.28		94	74	107	54	175
12	84	840.070	0.040	1.14		90	75	107	55	175
		844.150	0.040	1.14		90	74	105	56	170
Totals or Avgs.		50.588	0.037	1.04		92.4	71	108	53	164

Testing by Cubix Corporation

K 14
K: 28.53 0.5276 .99
.035 .99

EPA Method 5 Stack Sampling Data Sheet

Plant Name:	Rhone Poulenc		
Date:	12/14/89		
Source:	Unit 8		
Technicians:	Bcm, KD, JR		
Probe size:	6'	Run#: 3	Box#: 3
Nozzle Area:	0.000855	Filter #: N/A	
Time: Start:	1715	Stop: 1915	
Pretest Leak check:	0.00		

Stack Height:	400'	DGM#:	1529795
Stack Diameter:	173.7	DGMCF:	1.001
Stack moisture (% by volume)		Mol. Wt.	28.44
Atm. Pressure:	30.62	Static Pressure:	0.10
K Factor:	63.41	Sample Time:	84
PTCF:	0.84	No. of Sample Pts:	12
Posttest Leak Check:	0.00		
Meter Reading: Initial:	844.913	Final:	890.11

Impinger Number	1	2	3	4
Contents	80% PA	6% H_2O_2	6% H_2O_2	Silgel
Initial Wt. (g)				
Final Wt. (g)				

Exhaust Gas Concentrations: CO2 (%): O2 (%):

Point	Clock Time	DGM Reading	ΔP ("H2O)	ΔH ("H2O)	Line Vac. ("Hg)	DGM Temp.(°F)	Hot Box Temp.(°F)	Stack Temp.(°F)	Last Imp. Temp.(°F)	Probe Temp.(°F)
1	0.00	844.713	0.05	1.43		91	54	106	51	130
2	7.00	849.080	0.04	1.14		91	53	109	51	130
3	14	854.070	0.04	1.14		93	55	110	52	130
4	21	858.01	0.035	0.99		93	56	112	53	130
5	28	863.00	0.035	0.99		96	57	110	53	136
6	35	867.18	0.035	0.99		98	60	109	55	134
7	42	871.01	0.025	0.72		97	60	110	57	137
8	49	874.00	0.02	0.57		98	61	111	60	131
9	56	879.120	0.020	0.57		96	62	110	60	135
10	63	881.150	0.025	0.72		99	63	109	63	134
11	70	884.990	0.020	0.57		99	64	110	63	136
12	77	887.100	0.020	0.57		99	64	111	64	138
	84	890.11	0.024	0.51		98	63	109	66	140
Totals or Avgs.		45.197	0.029	0.84		96.1	59	110	58	135

Testing by Cubix Corporation

EPA Method 5 Stack Sampling Data Sheet

PS 0.3026 Hon
K 6.03 ΔH 0.48
time: 150 min
12.5 min/pt

Plant Name:	Rhône Poulenc	Stack Height: 400'	DGM#: 1529795
Date:	12/15/89	Stack Diameter: 173.7	DGMCF: 1.001
Source:	Unit 8	Stack moisture (% by volume) 0	Mol. Wt.
Technicians:	KJ, JR, BCM	Atm. Pressure: 30.58	Static Pressure: 1.43
Probe size: 6'	Run#: C4 Box#: 1	K Factor: 18.23	Sample Time: 66
Nozzle Area: 0.00076	Filter #: N/A	PTCF: 0.84	No. of Sample Pts: 12
Time: Start: 9:30	Stop: 10:56	Posttest Leak Check: 0.00	
Pretest Leak check: 0.00		Meter Reading: Initial: 840.940	Final: 935.640

Impinger Number	1	2	3	4
Contents	80% IPA	10% H_2O_2	10% H_2O_2	Silica
Initial Wt. (g)				
Final Wt. (g)				

#12
0.6969 SCFM
ΔH 1.45
Sample time 65 min
5.5 min/pt K 18.23
DP 0.08

Exhaust Gas Concentrations: CO2 (%): O2 (%):

Point	Clock Time	DGM Reading	ΔP ("H2O)	ΔH ("H2O)	Line Vac. ("Hg)	DGM Temp.(°F)	Hot Box Temp.(°F)	Stack Temp.(°F)	Last Imp. Temp.(°F)	Probe Temp.(°F)
1	0900	840.940	0.100	1.37		54	58	118	51.9	102
2	530	896.091	0.040	1.64		60	61	119	53	151
3	1100	899.945	0.070	1.28		63	62	123	55	153
4	1630	902.410	0.070	1.30		66	67	122	60	163
5	2200	907.730	0.080	1.46		71	76	121	62	190
6	2730	911.190	0.100	1.12		72	78	121	63	198
7	3300	915.196	0.050	0.91		74	73	125	63	160
8	3930	918.420	0.040	0.73		77	73	124	62	181
9	4400	921.300	0.050	0.91		78	75	125	63	176
10	4930	924.080	0.045	1.73		80	71	127	62	166
11	5500	927.370	0.075	1.37		84	72	125	63	187
12	6020	932.075	0.075	1.37		85	72	125	64	175
	6500	935.640	0.080	1.46		86	73	124	64	178
Totals or Avgs.		44.700	0.075	1.37		69	70	123	64	167

Testing by Cubix Corporation

EPA Method 5 Stack Sampling Data Sheet

Plant Name:	Rhone Poulenc	Stack Height:	400'
Date:	12.15.89	Stack Diameter:	173.7
Source:	Unit 8	Stack moisture (% by volume)	0
Technicians:	K.J., JR DCM	Atm. Pressure:	30.58
Probe size:	6' Run#: C-5 Box#: 2	K Factor:	18.53
Nozzle Area:	0.00076 Filter #: N/A	PTCF:	0.84
Time: Start:	11:30 Stop: 13:00		
Pretest Leak check:	0.00		

DGM#:	1529795		
DGMCF:	1.001		
Mol. Wt.			
Static Pressure:	0.43		
Sample Time:	66		
No. of Sample Pts:	12		
Posttest Leak Check:	0.00		
Meter Reading: Initial:	936.815	Final:	978.665

Impinger Number	1	2	3	4
Contents	80% IPA	6% H_2O_2	6% H_2O_2	Silgel
Initial Wt. (g)				
Final Wt. (g)				

Exhaust Gas Concentrations: CO2 (%): O2 (%):

Point	Clock Time	DGM Reading	ΔP (" H2O)	ΔH (" H2O)	Line Vac. ("Hg) -11	DGM Temp.(°F)	Hot Box Temp.(°F)	Stack Temp.(°F)	Last Imp. Temp.(°F)	Probe Temp.(°F)
1	0:00	936.815	0.080	1.46		77	71	127	53	143
2	530	940.290	0.090	1.65		79	72	126	54	145
3	1:00	943.690	0.080	1.46		81	73	126	53	168
4	1630	947.520	0.040	0.73		80	74	123	57	170
5	2:00	949.910	0.035	0.64		80	74	124	56	171
6	2:30	952.930	0.045	0.82		82	73	124	56	165
7	3:00	955.010	0.065	1.18		82	74	124	57	170
8	3:30	959.230	0.085	1.54		83	80	123	58	173
9	4:00	962.890	0.090	1.65		85	81	121	60	172
10	4:30	966.585	0.100	1.82		86	85	124	62	156
11	5:00	970.940	0.090	1.65		87	84	123	63	158
12	5:30	974.935	0.080	1.46		88	83	124	65	166
	6:00	978.665	0.075	1.37		89	83	123	66	168
Totals or Avgs.		41.850	0.073	1.34		83	78	124	59	163

Testing by Cubix Corporation

EPA Method 5 Stack Sampling Data Sheet

Nozzle #12

Plant Name:	Rhône Poulenc	Stack Height: 400'	DGM#: 1529795
Date:	12-15-89	Stack Diameter: 173.7	DGMCF: 1.001
Source:	UNIT 8	Stack moisture (% by volume) 0	Mol. Wt.
Technicians:	KD. JF.	Atm. Pressure: 30.58	Static Pressure: 0.41
Probe size:	6' Run#: C-6 Box#: 3	K Factor: 18.23	Sample Time: 5.5 min/pt
Nozzle Area:	0.00076 Filter #: N/A	PTCF: 0.84	No. of Sample Pts: 12
Time: Start:	1400 Stop: 1510	Posttest Leak Check: 0.02	
Pretest Leak check:	0.02	Meter Reading: Initial: 982.25	Final: 025.000

Impinger Number	1	2	3	4
Contents	80% IPA	6% H_2O_2	6% H_2O_2	Silgel
Initial Wt. (g)	N/A	"	"	"
Final Wt. (g)	N/A	"	"	"

Exhaust Gas Concentrations: CO2 (%): O2 (%):

12

Point	Clock Time	DGM Reading	ΔP ("H2O)	ΔH ("H2O)	Line Vac. ("Hg)	DGM Temp.(°F)	Hot Box Temp.(°F)	Stack Temp.(°F)	Last Imp. Temp.(°F)	Probe Temp.(°F)
1	000	982.25	0.110	1.82		75	75	123	53	97
2	530	987.410	0.090	1.65		75	76	122	55	147
3	1100	991.35	0.080	1.46		76	82	121	56	160
4	1630	995.210	0.070	1.27		79	82	122	57	155
5	2200	998.660	0.080	1.46		80	80	123	58	161
6	2730	001.971	0.095	1.73		81	75	123	57	153
7	3300	005.735	0.040	0.73		79	76	122	58	138
8	3830	009.210	0.035	0.64		78	78	123	59	140
9	4400	011.930	0.050	0.91		78	69	116	61	154
10	4930	014.750	0.080	1.46		77	68	118	62	151
11	5500	017.631	0.085	1.55		77	68	117	63	120
12	6030	021.370	0.080	1.46		78	63	118	64	135
	6600	025.000	0.080	1.46		77	64	119	65	133
Totals or Avgs.		42.750	0.074	1.35		77.7	73	120.5	59	142

Testing by Cubix Corporation

SO_2, SO_3 Analytical Data

Date Rhône Poulenc
Plant Houston
Test Run(s) C4 - C6
Technician DCM, KJ, JR

Emission Source Unit #8
Location Houston, TX
Impinger Type Standard

Normality of Barium Perchlorate Titrant

N Titrant= 10 N H2SO4 x 0.02 ml H2SO4 / mls of Titrant

mls Titrant
1 19.35
2 19.4
3

Avg. mls 19.4

Avg. N of SO2 Titrant 0.010

Sample number	Sample identification number	Total sample volume (V_{soln}), ml	Sample aliquot volume (V_a)[a], ml	Volume of titrant (V_t)[b], ml			
				1st titration	2nd titration	Average	3rd
1 C-4	1st Impinger SO_3	250	100	4.5	4.5	4.5	
2 C-4	2nd and 3rd Imp SO_2	1000	10	~~17.4~~	17.0	17.0	17.0
3 C-5	1st Impinger (SO_3)	250	100	4.5	4.5	4.5	
4 C-5	2nd + 3rd (SO_2)	1000	1.0	15.7	15.7	15.7	
5 C-6	1st + Filter (SO_3)	250	100	4.1	4.1	4.1	
6 C-6	2nd + 3rd SO_2	1000	1.0	16.8	32.5 2.0 mls	16.6	
Blank		N/A				V_{tb} = 0.005	

Dry Gas Volume (SCF)

$$V_S = 17.64 \times K_d \times U_m \times \frac{P_b}{T_m + 460}$$

_____(SCF)= 17.64 x _____ x _____(ACF) x $\frac{\text{"Hg}}{\text{F+ 460}}$

SO_2/SO_3 Concentrations

$$C_{SO_2/SO_3} = K \times \frac{(V_t - V_{tb})\ (N)\ \frac{V_{sol}}{Va}}{V_s}$$

$$\underset{\text{lbs/dscf}}{_____}C_{SO_2} = 7.061 \times 10^{-5} \times \frac{(____\text{ml} - ____\text{ml})\ (____\text{N})\ \frac{\text{ml}}{\text{ml}}}{_____\text{SCF}}$$

$$\underset{\text{ppmv}}{_____}C_{SO_2} = \underset{\text{lbs/dscf}}{_____}C_{SO_2} \times 6.01 \times 10^6$$

$$\underset{\text{lbs/dscf}}{_____}C_{SO_3} = 8.82 \times 10^{-5} \times \frac{(____\text{ml} - ____\text{ml})\ (____\text{N})\ \frac{\text{ml}}{\text{ml}}}{_____\text{SCF}}$$

SO_2, SO_3 Analytical Data

Date Rhône Poulenc

Plant H_2SO_4

Test Run(s) C4-C6

Technician

Emission Source

Location

Impinger Type

Normality of Barium Perchlorate Titrant

N Titrant= 10 N H2SO4 x 0.02 ml H2SO4 / mls of Titrant

mls Titrant

1 19.35

2 19.4

3

Avg. mls 19.4

Avg. N of SO2 Titrant 0.010

Sample number	Sample identification number	Total sample volume (V_{soln}), ml	Sample aliquot volume (V_a)[a], ml	Volume of titrant (V_t)[b], ml		
				1st titration	2nd titration	Average
1 C-3	Imp 1 + Filter SO_3	250	100	0.8	0.8	0.8
2 C-3	Imp 2 + 3	1000	10	0.3	0.3	
3 "	"	1000	100.0	1.4	1.4	
4						
5						
6						
Blank		N/A				V_{tb} =

Dry Gas Volume (SCF)

$$V_S = 17.64 \times K_d \times U_m \times \frac{P_b}{T_m + 460}$$

$$_____(SCF) = 17.64 \times _____ \times _____(ACF) \times \frac{_____ \text{"Hg}}{_____ F + 460}$$

SO_2/SO_3 Concentrations

$$C_{SO_2/SO_3} = K \times \frac{(V_t - V_{tb})\ (N)\ \frac{V_{sol}}{Va}}{V_s}$$

$$\underset{lbs/dscf}{_____}C_{SO_2} = 7.061 \times 10^{-5} \times \frac{(____ ml - ____ ml)\ (____ N)\ \frac{____ ml}{____ ml}}{_____ SCF}$$

$$\underset{ppmv}{_____}C_{SO_2} = \underset{lbs/dscf}{_____}C_{SO_2} \times 6.01 \times 10^6$$

$$\underset{lbs/dscf}{_____}C_{SO_3} = 8.82 \times 10^{-5} \times \frac{(____ ml - ____ ml)\ (____ N)\ \frac{____ ml}{____ ml}}{_____ SCF}$$

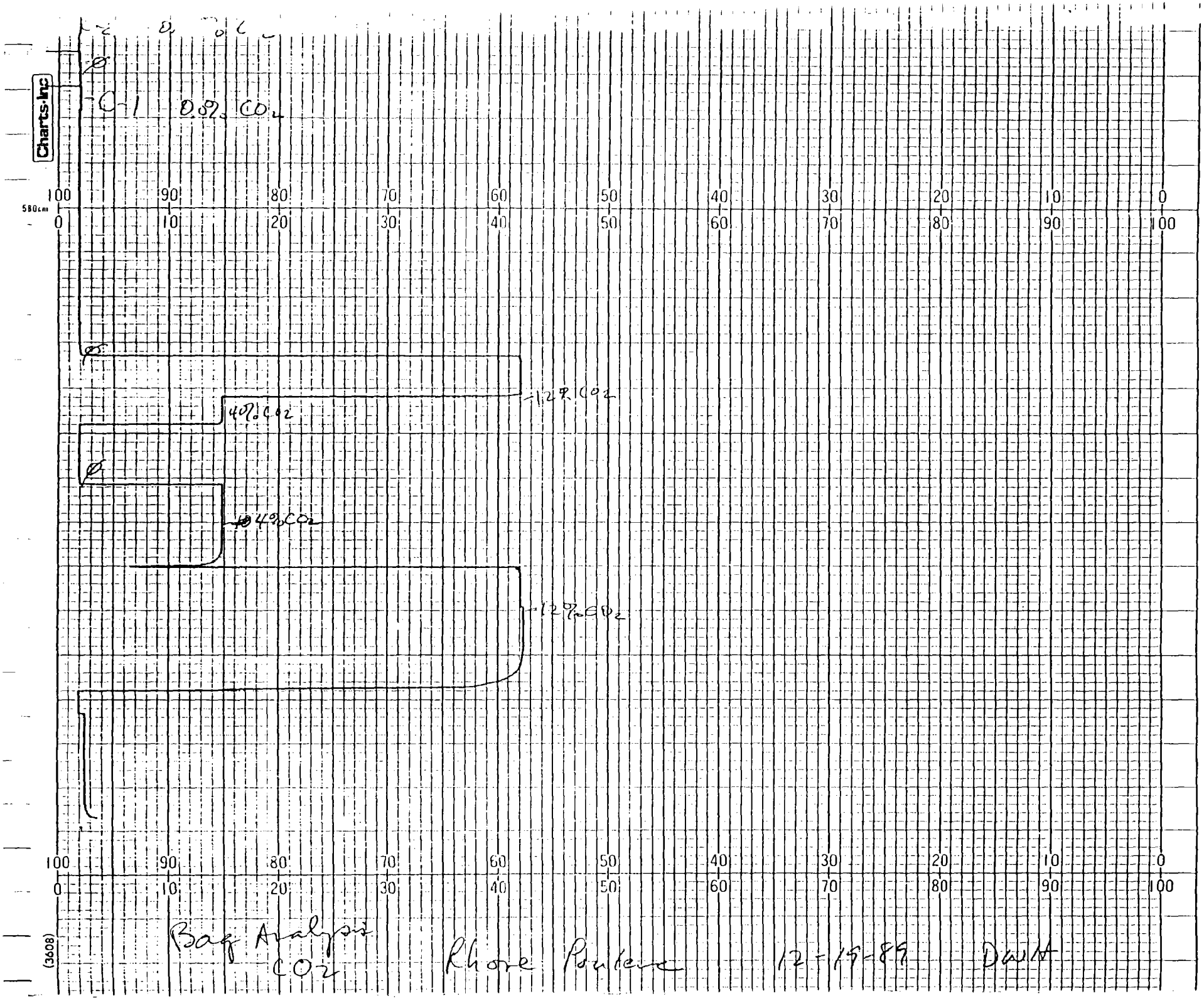

Bag Analysis
CO_2 Rhone Poulenc 12-19-89 DWM

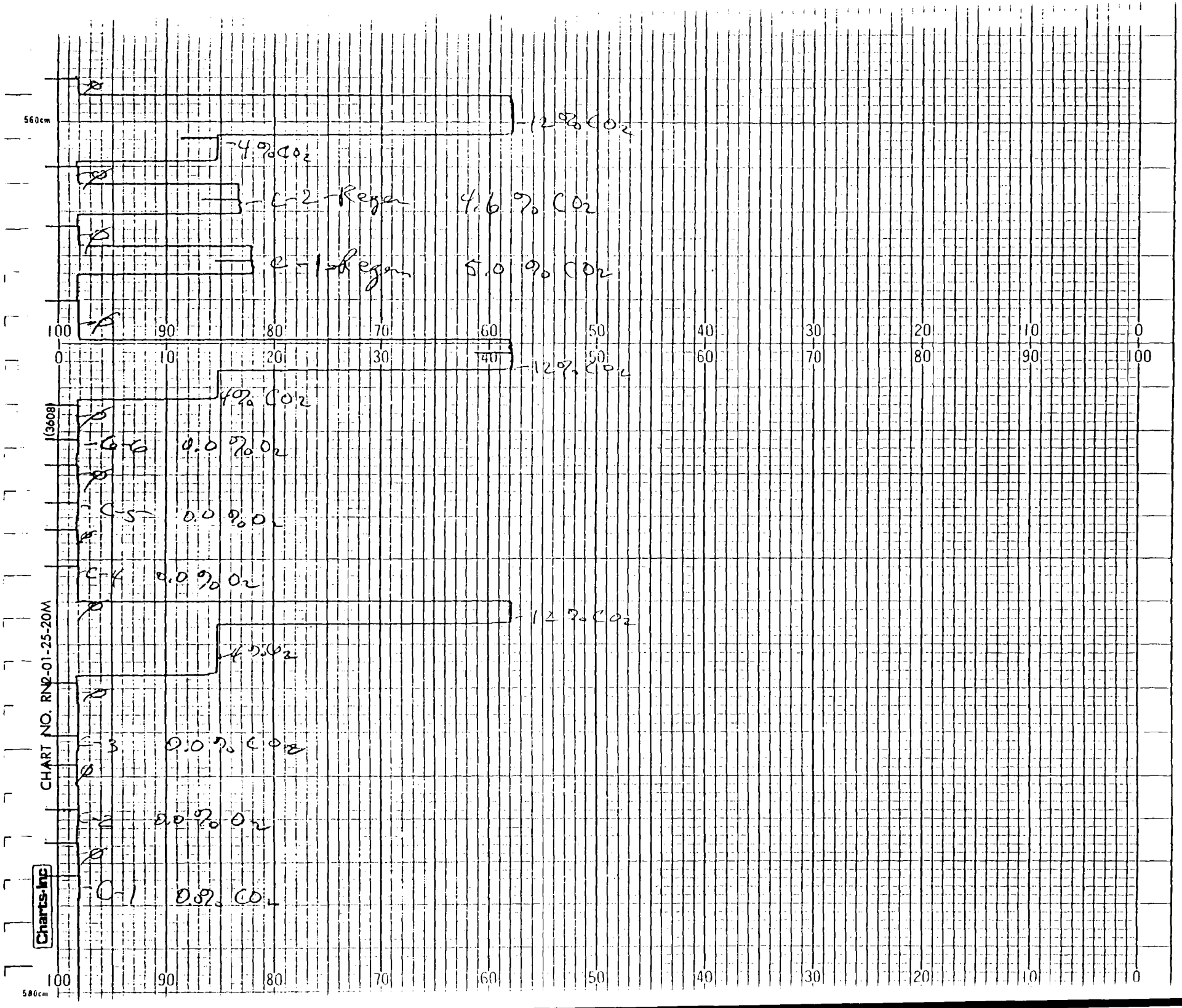
560cm
-12% CO2
-4% CO2
C-2 Regen 4.6% CO2
C-1 Regen 5.0% CO2
100 90 80 70 60 50 40 30 20 10 0
0 10 20 30 40 50 60 70 80 90 100
-12% CO2
4% CO2
(3608)
C-6 0.0% O2
C-5 0.0% O2
C-4 0.0% O2
-12% CO2
4% CO2
C-3 0.0% CO2
C-2 0.0% O2
C-1 0.0% CO2
CHART NO. RN2-01-25-20M
Charts-Inc
100 90 80 70 60 50 40 30 20 10 0
580cm

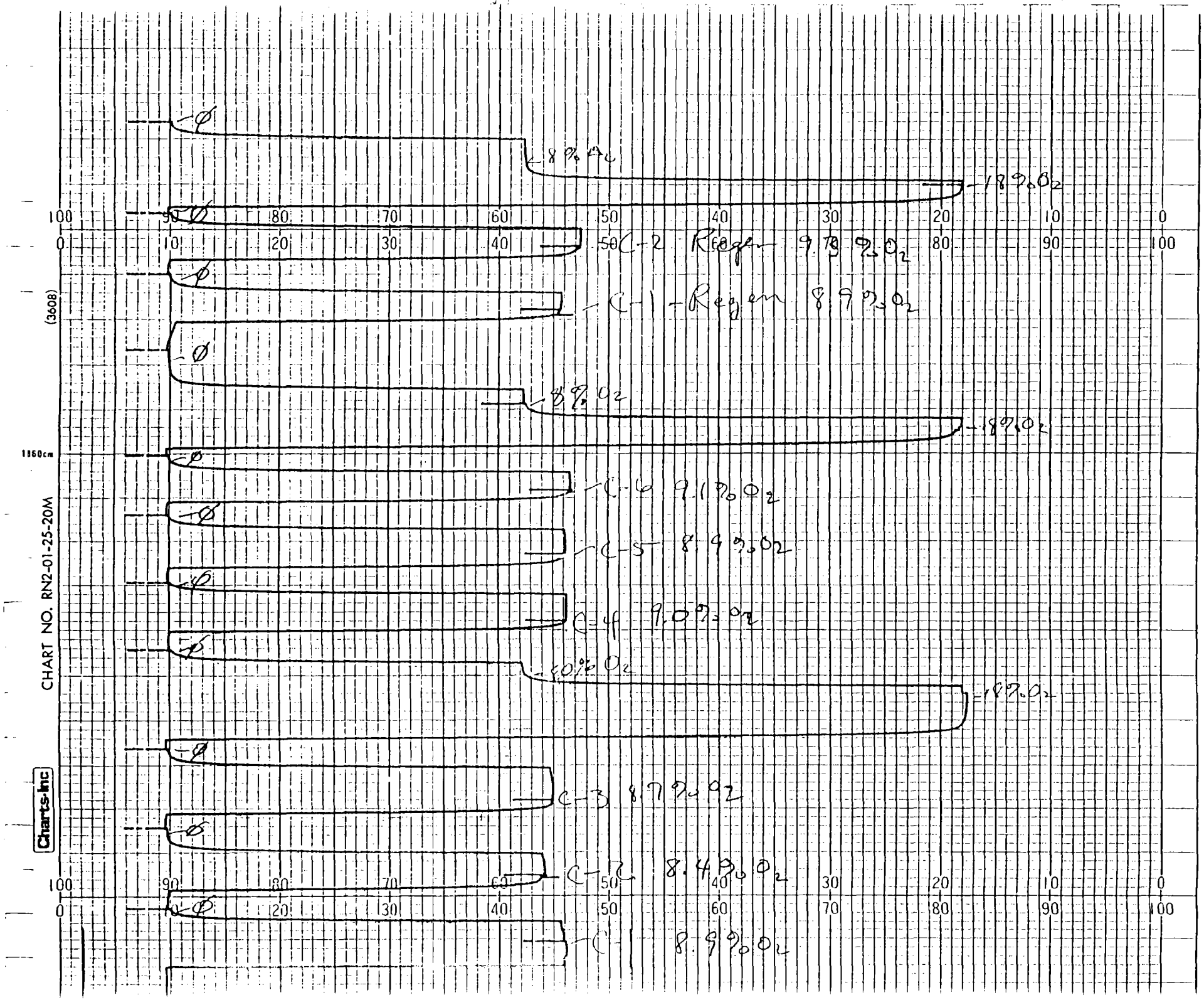
CHART NO. RN2-01-25-20M
Charts-Inc
(3608)
1860cm
100 90 80 70 60 50 40 30 20 10 0
0 10 20 30 40 50 60 70 80 90 100
Ø
8% O2
18% O2
C-2 Regen 9.7% O2
C-1 Regen 8.9% O2
8% O2
18% O2
C-6 9.1% O2
C-5 8.9% O2
C-4 9.0% O2
10% O2
18% O2
C-3 8.7% O2
C-2 8.4% O2
C-1 8.9% O2

APPENDIX B
UNIT OPERATION DATA

Rhône Poulenc BCW, KW, JR

Unit-8 O.S.

Houston O.S. 13-19

Date 12/14

RUN	P-1	C-1	C-2	C-3	P-2	C-4	C-5	C-6
Firebox Temp (°F)	1695	1695	1696	1697	1709	1709	1704	1674
SO_2 Monitor (%)	1930	1940	1910	1960	1860	1860	1800	1930
Stack Temp (°F)								
Acid Production (X33.5)	37.6	37.8	38.2	38.1	50.0	50	49.5	50
Blower Speed (RPM)	2697	2698	2696	2700	3704	3703	3702	3700
Furnace Pressure (" H_2O)	83	84 14:16	83 17:34	82 1640	169	168 10:00	168 1449	175

natural

APPENDIX C

SEISMIC DATA SHEETS

Sample No._____ Stack Name_____ Company Name_____

In office prelim

FIELD CHECK OF PERCENT ISOKINETIC

The following field check should be performed after the first sample and may be performed after subsequent samples if changes were made. None of the results from this page are used as input into the final data reduction.

1. Calculate nozzle volume at stack conditions (NVSC) given the following items obtained during the sample:

   a. Corrected dry gas volume, DGV 43.55 ft^3 meter correction factor
   b. Aver. Stack Temp., TS 590 °R
   c. Aver. Meter Temp., TM 580 °R 43.5 x 1.001
   d. Dry Gas Fraction, BDG 1

$$NVSC = \frac{(DGV)\ \frac{(TS)}{(TM)}}{(BDG)} = \frac{(43.55)\ \frac{(590)}{(580)}}{(1)} = 44.3\ ft^3$$

STP Correction

2. Calculate the average corrected stack velocity (V). First, sum the square roots of the Δp's obtained during the sample and divide by N, the number of Δp's, to obtain the average square root of Δp:

$$\text{Aver. } \sqrt{\Delta p} = \frac{\Sigma\sqrt{\Delta p}}{N} = \frac{(\ \ )}{(\ \ )} = 49\ \text{in.}$$ 1/2

$$V = (85.48)\ (PTCF)\ \sqrt{\frac{TS}{\text{Mole Wt.} \times \text{Stack Press}}}\ \text{Aver. } \sqrt{\Delta p}$$

$$V = (85.48)\ (.84)\ \sqrt{\frac{(590)}{(28)(29.7)}}\ (.05) = 29.63\ ft/sec$$

Preliminary molecular weight may be used unless significant changes occurred in moisture fraction. Preliminary stack pressure may be used.

3. Calculate percent isokinetic given:

   a. Nozzle volume, NVSC 44.3 ft^3
   b. Nozzle area, AN .00033 ft^2
   c. Sample Time, TIM 5040 seconds
   d. Aver. Corrected Velocity, V 29.63 ft/sec

$$\%\ Iso. = \frac{(NVSC)(100\%)}{(AN)(TIM)(V)} = \frac{(44.3)(100\%)}{(.00033)(5040)(30.2)} = ____$$

Date _____

Signature _____

Revised Dec 79 JDS

in office prelim

NOZZLE AND K DETERMINATION

This page is not necessary if nomograph is used.

Step 1. Calculate the following nozzle determination constant:

$$C = \begin{bmatrix}\text{Preliminary}\\ \text{Velocity}\\ \text{ft/min}\end{bmatrix} \times \left[\frac{\text{Dry Gas}}{\text{Fraction}}\right] \times \left[\frac{\text{Stk. Press. "Hg}}{\text{29.92 "Hg}}\right] \times \left[\frac{528\ °R}{\text{Stk.Temp.}°R}\right]$$

1.0

$$C = \left[1768\right] \times \left[1.0\right] \times \left[\frac{29.7}{29.92}\right] \times \left[\frac{528}{590}\right]$$

$$= \underline{1571}\ \text{ft/min}$$

Step 2. Calculate the desired Nozzle Area from the desired flow rate: (See sampling manual for guidelines on desired flow rate.)

$$\text{Desired Nozzle Area} = \frac{\text{Desired flow rate at STP, ft}^3\text{/min}}{\text{C, from above, ft/min}} = \left[\frac{.75/1.0}{1571}\right] = \underline{.0005/.0006}\ \text{ft}^2$$

Step 3. Choose appropriate nozzle from those available.

Noz. No. selected 12, Area of nozzle selected .00033 ft^2

This nozzle may be changed for subsequent samples. Always indicate the area used on each field data sheet. Each sample point is sampled for an equal amount of time. Total sample time is the product of the number of points and the time per point.

Step 4. Calculate the flow rate at standard conditions for this nozzle.

$$\text{Flow Rate for Nozzle Selected} = \left[\text{Area of Nozzle Selected}\right] \times \left[\text{Constant C, above}\right] = \left[\text{Stack Flow}\right] \times \left[\text{Nozzle size}\right] = \underline{0.518}\ \text{SCFM}$$

Check the total sample volume. Max. & min. sample volume is discussed in the Sampling Manual.

$$\text{Total Vol.} = (\text{SCFM}) \times \left[\text{Total time min.}\right] = \left[0.518\right] \times \left[79^{84}\right] = \underline{44^{43.5}}\ \text{ft}^3 \text{ at STP Dry}$$

Step 5. Calculate ΔH: $\Delta H = a\,(\text{SCFM})^b = (\quad)(\quad)[\quad] = \underline{0.89}$ "H_2O

get this from curve

The orifice curve constants, a and b, are posted on the front of each console.

Step 6. Calculate ΔP: $\Delta P = (\text{Aver.}\sqrt{\Delta p})^2 = (0.49)^2 = \underline{0.24}$ "H_2O Velocity data

Average $\sqrt{\Delta p}$ is from the preliminary velocity calculations.

Step 7. Calculate K: $K = \left[\frac{\Delta H}{\Delta P}\right] = \left[\frac{0.89}{0.24}\right] = \underline{3.71}$. $\Delta H = \Delta P \times K$

K will be used to determine ΔH, $\Delta H = \Delta P \times K \times \left[\frac{Tm_o\ °R}{528}\right]$

Tm_o is the outlet temperature of the dry gas meter. K may be changed for subsequent samples. Indicate the K factor used on each data sheet.

Date _____

Signature _____

Nozzle and K Determination

Company name Rhone Poulenc **Plant** Houston H2SO4 Plant

Step 1

Stack Velocity Standard Conditions (ft/min)	Preliminary Velocity (ft/min)	Dry Gas Fraction	Stack Pressure ("Hg)	Stack Temp. Average (°F)
611	639	1	30.68	106

Step 2

Desired Nozzle Area (ft2)	Desired Flow Rate (at STP) (ft3/min)
0.001227	0.75

Step 3

Nozzle No.	Area of Nozzle
16	0.00133

Step 4

Flow Rate of Nozzle (SCFM)
0.8129

Total Sample Volume (ft3 at STP dry)	Total Time (min)
48.777	60

Step 5

Calculate ΔH by checking orifice curve

ΔH ("H2O)
2.2

Step 6

Δp ("H2O)	Average√Δp
0.035	0.18627

Step 7

K Factor
63.41

Date 12/14/89

Signed

Testing by Cubix Corporation

Nozzle and K Determination

Company name Rhone Poulenc **Plant** Houston H2SO4 Plant

Step 1

Stack Velocity Standard Conditions (ft/min)	Preliminary Velocity (ft/min)	Dry Gas Fraction	Stack Pressure ("Hg)	Stack Temp. Average (°F)
917	986	1	30.55	119.7

Step 2

Desired Nozzle Area (ft2)	Desired Flow Rate (at STP) (ft3/min)
0.000545	0.5

Step 3

Nozzle No.	Area of Nozzle
12	0.00076

Step 4

Flow Rate of Nozzle (SCFM)
0.6969

Total Sample Volume (ft3 at STP dry)	Total Time (min)
45.299	65

Step 5

Calculate ΔH by checking orifice curve

ΔH ("H2O)
1.45

Step 6

Δp ("H2O)	Average√Δp
0.080	0.28205

Step 7

K Factor
18.23

Date 12/14/89

Signed DCN

Testing by Cubix Corporation

Field Check of Percent Isokinetic

Sample # C1
Source Unit 8
Company name Rhone Poulenc
Plant Houston, Texas

Step 1

Nozzle Volume at Stack Conditions (ft3)	Corrected Dry Gas Volume (ft3)	Average Stack Temperature (°F)	Average Meter Temperature (°F)	Dry Gas Fraction
42.649	40.426	108	78.4	1

Step 2

Avg. Corrected Stack Velocity (ft/sec)	Molecular Weight	Stack Pressure ("Hg)	Average $\sqrt{\Delta p}$
10.129	28.64	30.62	0.17528

Step 3

Nozzle Area	Sample Time (minutes)
0.0013	60

% Isokinetic

90.73

Date 12/14/89

Signed

Testing by Cubix Corporation

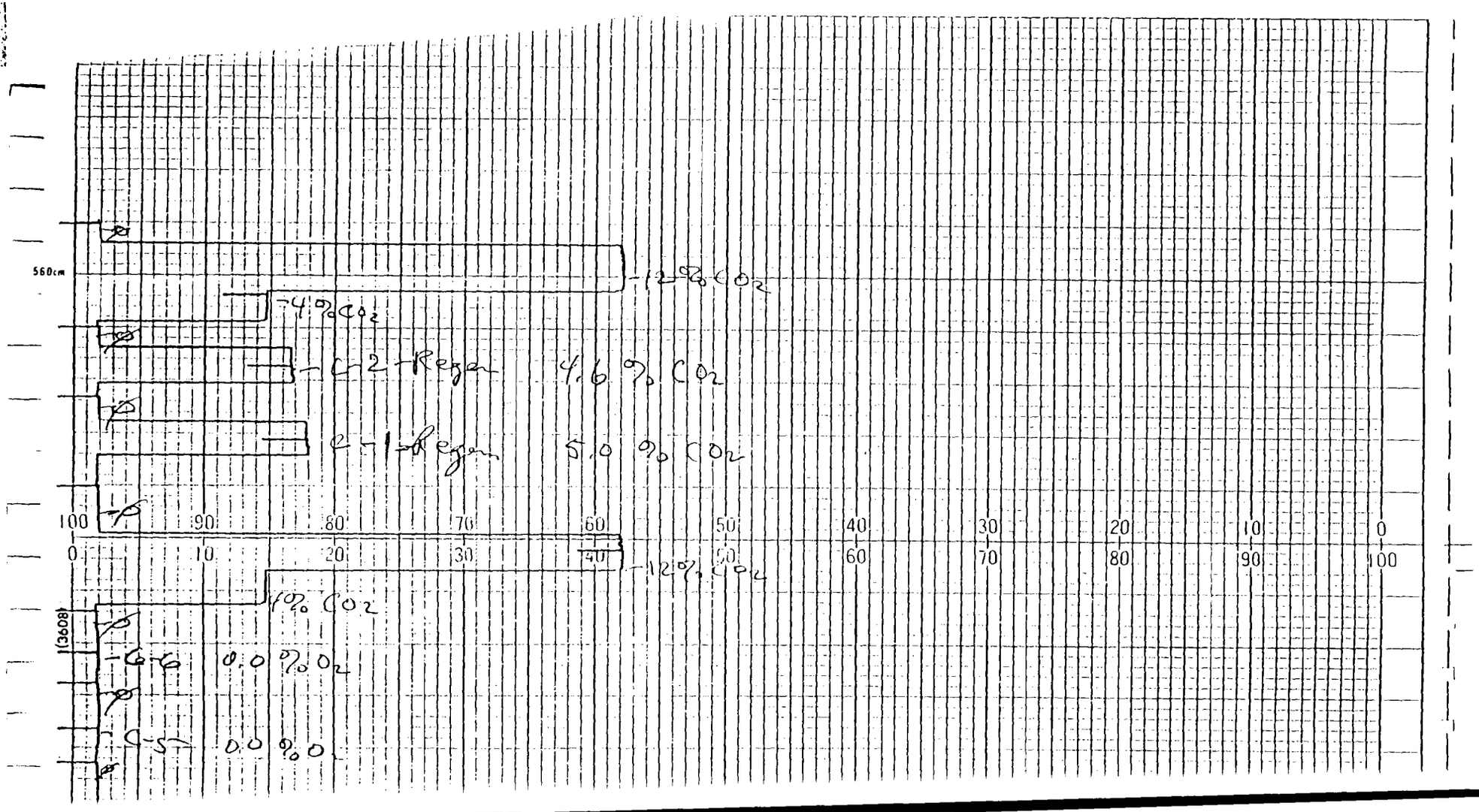
560cm
(3608)
100
90
80
70
60
50
40
30
20
10
0
0
10
20
30
40
50
60
70
80
90
100
12% CO2
4% CO2
C-2-Regen 4.6 % CO2
C-1-Regen 5.0 % CO2
12% CO2
10% CO2
C-6-6 0.0 % O2
C-5- 0.0 % O2

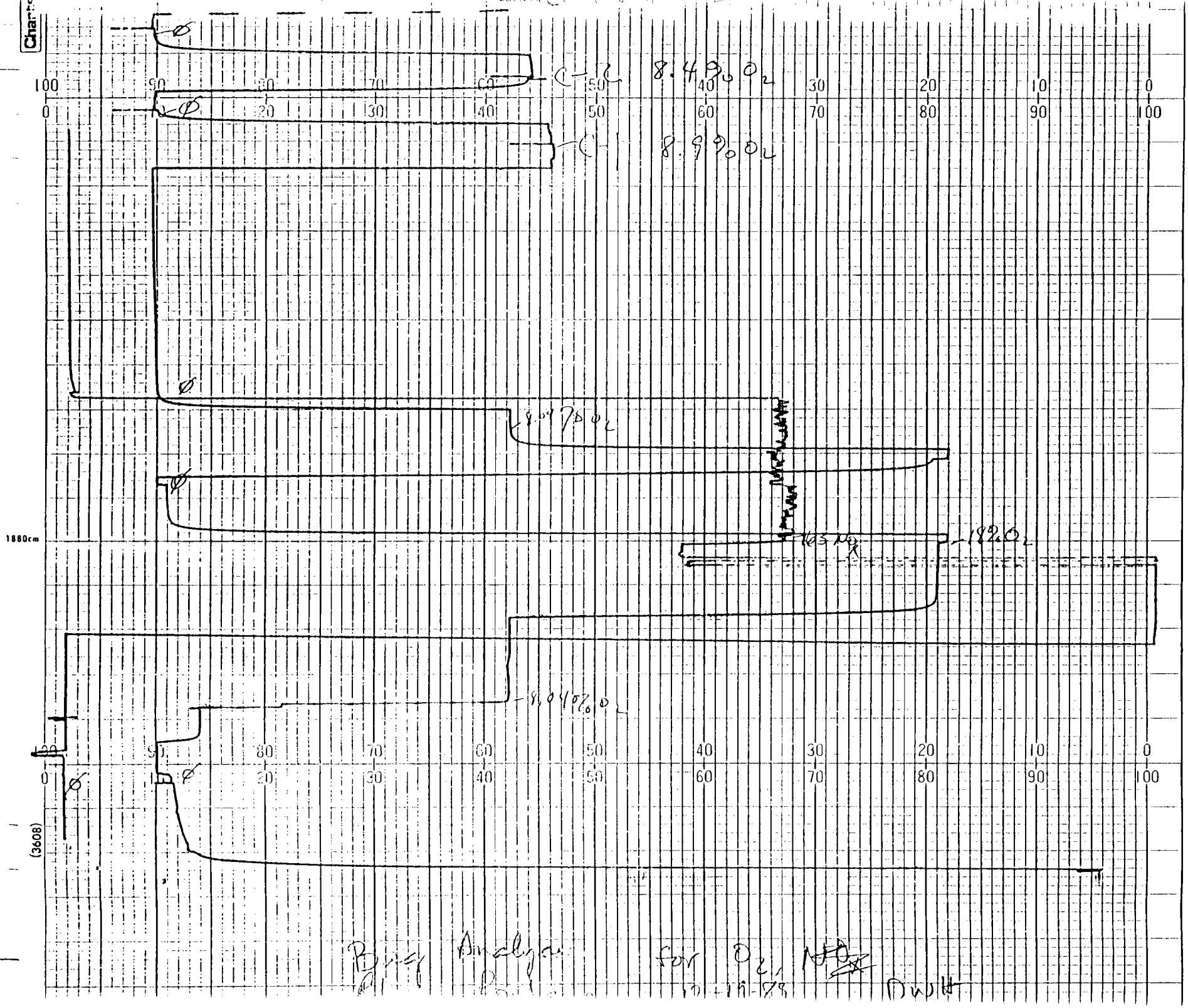
Charts
100 90 80 70 60 50 40 30 20 10 0
0 10 20 30 40 50 60 70 80 90 100
8.49% O2
8.99% O2
8.97% O2
1880cm
1820 O2
8.94% O2
(3608)
Gas Analyzer for O2, NOx
10-14-78

Field Check of Percent Isokinetic

Sample # C-2
Source Unit 8
Company name Rhone Poulenc
Plant Houston, Texas

Step 1

Nozzle Volume at Stack Conditions (ft3)	Corrected Dry Gas Volume (ft3)	Average Stack Temperature (°F)	Average Meter Temperature (°F)	Dry Gas Fraction
52.069	50.639	108	92.4	1

Step 2

Avg. Corrected Stack Velocity (ft/sec)	Molecular Weight	Stack Pressure ("Hg)	Average $\sqrt{\Delta p}$
11.257	28.34	30.62	0.193772

Step 3

Nozzle Area	Sample Time (minutes)
0.000855	84

% Isokinetic

107.34

Date 12/13/89

Signed

Testing by Cubix Corporation

Field Check of Percent Isokinetic

Sample #	C-3
Source	Unit 8
Company name	Rhone Poulenc
Plant	Houston, Texas

Step 1

Nozzle Volume at Stack Conditions (ft3)	Corrected Dry Gas Volume (ft3)	Average Stack Temperature (°F)	Average Meter Temperature (°F)	Dry Gas Fraction
45.060	43.961	110	96.1	1

Step 2

Avg. Corrected Stack Velocity (ft/sec)	Molecular Weight	Stack Pressure ("Hg)	Average $\sqrt{\Delta p}$
10.021	28.35	30.62	0.172231

Step 3

Nozzle Area	Sample Time (minutes)
0.000855	84

% Isokinetic
104.35

Date 12/14/89

Signed BCN

Testing by Cubix Corporation

Field Check of Percent Isokinetic

Sample # C4
Source Unit 8
Company name Rhone Poulenc
Plant Houston, Texas

Step 1

Nozzle Volume at Stack Conditions (ft3)	Corrected Dry Gas Volume (ft3)	Average Stack Temperature (°F)	Average Meter Temperature (°F)	Dry Gas Fraction
50.304	45.645	123	69	1

Step 2

Avg. Corrected Stack Velocity (ft/sec)	Molecular Weight	Stack Pressure ("Hg)	Average $\sqrt{\Delta p}$
15.888	28.64	30.62	0.27138

Step 3

Nozzle Area	Sample Time (minutes)
0.00076	66

% Isokinetic

105.20

Date 12/15/89

Signed

Testing by Cubix Corporation

Field Check of Percent Isokinetic

Sample #	C5
Source	Unit 8
Company name	Rhone Poulenc
Plant	Houston, Texas

Step 1

Nozzle Volume at Stack Conditions (ft3)	Corrected Dry Gas Volume (ft3)	Average Stack Temperature (°F)	Average Meter Temperature (°F)	Dry Gas Fraction
44.777	41.633	124	83	1

Step 2

Avg. Corrected Stack Velocity (ft/sec)	Molecular Weight	Stack Pressure ("Hg)	Average $\sqrt{\Delta p}$
15.677	28.64	30.62	0.26754

Step 3

Nozzle Area	Sample Time (minutes)
0.00076	66

% Isokinetic
94.91

Date 12/15/89

Signed

Testing by Cubix Corporation

Field Check of Percent Isokinetic

Sample # C6
Source Unit 8
Company name Rhone Poulenc
Plant Houston, Texas

Step 1

Nozzle Volume at Stack Conditions (ft3)	Corrected Dry Gas Volume (ft3)	Average Stack Temperature (°F)	Average Meter Temperature (°F)	Dry Gas Fraction
46.367	42.948	120.5	77.7	1

Step 2

Avg. Corrected Stack Velocity (ft/sec)	Molecular Weight	Stack Pressure ("Hg)	Average $\sqrt{\Delta p}$
15.688	28.64	30.62	0.26855

Step 3

Nozzle Area	Sample Time (minutes)
0.00076	66

% Isokinetic
98.20

Date 12/15/89

Signed

Testing by Cubix Corporation

Scott Specialty Gases

a division of
Scott Environmental Technology, Inc.

1290 COMBERMERE STREET, TROY, MICHIGAN 48084 (313) 589-2950

Shipped from : Scott Troy

Our Project # : 4679

Your P.O. # : 89-204

Expiration Date : 3-15-91

Cylinder Number ALM-007106

Cylinder Pressure 2000 psig

etomer :
CUBIX CORPORATION
1713 FORT VIEW ROAD
AUSTIN TX 78704

CERTIFICATE OF ANALYSIS - EPA PROTOCOL GASES
PERFORMED ACCORDING TO SECTION 3.0.4

Certified Per Traceability Protocol # 1

Procedure # G1

File # F03189

Certified Accuracy 1 % NBS Traceable

	REFERENCE STD				GAS ANALYZER		
COMPONENT	CERTIFIED CONC.	SRM # (CRM #)	CYLINDER NUMBER	CONC.	MAKE/MODEL/SERIAL #	LAST CALIBRATION DATE	ANALYTICAL PRINCIPLE
TRIC OXIDE	794.3 PPM	1687	AAL-19320	965.7 PPM	BECKMAN/951/0101108	4-13-89	CHEMILUMINESCENCE

LANCE GAS : NITROGEN

TROGEN DIOXIDE 5.00 PPM

CERTIFIED PROTOCOL

FIRST ANALYSIS DATE : 9-7-87

ERO AS (mV)	TEST GAS (mV)	RESULTS PPM	REFERENCE GAS CONC.	REFERENCE GAS (mV)	RESULTS PPM
00	79.40	793.8	965.7 PPM	96.60	965.7
00	79.40	793.8		96.60	965.7
00	79.40	793.8		96.60	965.7

CALCULATED RESULTS 793.8
793.8
793.8

AVERAGE : 793.8 PPM

SECOND ANALYSIS DATE : 9-15-89

ZERO GAS (mV)	TEST GAS (mV)	RESULTS PPM	REFERENCE GAS CONC.	REFERENCE GAS (mV)	RESULTS PPM
0.00	79.50	794.8	965.7 PPM	96.60	965.7
0.00	79.50	794.8		96.60	965.7
0.00	79.50	794.8		96.60	965.7
0.00	80.00 NOX	799.8			

CALCULATED RESULTS 794.8
794.8
794.8

AVERAGE : 794.8 PPM

799.8 PPM NOX

CALIBRATION CURVE 1st DEGREE

SRM # (CRM #)	CONC. PPM	SPLIT PT (%)	DVM (mV)	FITTED VALUE	PERCENT ERROR
1687	965.7	100	96.60	965.7	.00
	772.6	80	77.30	772.8	0.04
	579.4	60	57.70	577.0	-0.42
	386.3	40	38.60	386.1	-0.04
	193.1	20	19.30	193.3	0.08
	0.0000	0	0.00	0.0000	0.00
	0.00			0.00	0.00
1685	236.0		23.50	235.3	-0.32
1686	470.0		46.60	466.1	-0.83

GMIS - GAS MANUFACTURER'S INTERNAL STANDARD

Analyst : Rohit G. Patel

Approved By : Robert M. Lemmah

Scott Specialty Gases

a division of
Scott Environmental Technology, Inc.

1290 COMBERMERE STREET, TROY, MICHIGAN 48084 (313) 589-2950

Shi... From Scott

Our Project # : 1029

Your P.O. # : F89040

Expiration Date : 10-3-90

Cylinder Number AAL-12881

Cylinder Pressure 2000 psig

Customer :
CUBIX CORP
P.O. BOX 5083
AUSTIN, TX 78763

CERTIFICATE OF ANALYSIS - EPA PROTOCOL GASES

Certified Per Traceability Protocol # 1

Procedure # 81

File # P02473

Certified Accuracy 1 % NBS Traceable

COMPONENT	CERTIFIED CONC.	REFERENCE STD: SRM # (CRM #)	REFERENCE STD: CYLINDER NUMBER	REFERENCE STD: CONC.	GAS ANALYZER: MAKE/MODEL/SERIAL #	GAS ANALYZER: LAST CALIBRATION DATE	ANALYTICAL PRINCIPLE
NITRIC OXIDE	163.0 PPM	1685	AAL-9661	236.0 PPM	HORIBA	3-27-89	CHEMILUMINESCENCE
		GMIS#	AAL-4483	98.13 PPM			

BALANCE GAS : NITROGEN

NITROGEN DIOXIDE 0.59 PPM

CERTIFIED EPA PROTOCOL

FIRST ANALYSIS DATE : 3-27-89

ZERO GAS (mV)	TEST GAS (mV)	RESULTS PPM	REFERENCE GAS CONC.	REFERENCE GAS (mV)	RESULTS PPM
0.00	55.40	163.4	236.0 PPM	80.00	236.0
0.00	55.20	162.9		80.00	236.0
0.00	55.30	163.1		80.00	236.0
CALCULATED RESULTS		163.4			
		162.9			
		163.1			
AVERAGE :		163.1 PPM			

SECOND ANALYSIS DATE : 4-3-89

ZERO GAS (mV)	TEST GAS (mV)	RESULTS PPM	REFERENCE GAS CONC.	REFERENCE GAS (mV)	RESULTS PPM
0.00	55.20	162.9	236.0 PPM	80.00	236.0
0.00	55.20	162.9		80.00	236.0
0.00	55.20	162.9		80.00	236.0
0.00	55.40 NOX	163.4			
CALCULATED RESULTS		162.9			
		162.9			
		162.9	163.4 PPM NOX		
AVERAGE :		162.9 PPM			

CALIBRATION CURVE 1 st DEGREE

SRM # (CRM #)	CONC. PPM	SPLIT PT (%)	DVM (mV)	FITTED VALUE	PERCENT ERROR
1685	236.0	100	80.00	236.0	.00
	188.8	80	63.90	188.5	-0.15
	141.6	60	47.80	141.0	-0.40
	94.40	40	32.00	94.43	0.03
	47.20	20	16.00	47.23	0.07
	0.0000	0	0.00	0.0000	0.00
	0.00			0.00	0.00
	219.0	LOW	73.75	217.6	-0.65
	98.13	GMIS#	33.50	98.85	0.73

GMIS - GAS MANUFACTURER'S INTERNAL STANDARD

Analyst : [signature]

Approved By : J. Shapiro

The only liability of this Company for gas which fails to comply with this analysis shall be replacement thereof by the Company without extra cost.

Thermo Electron CORPORATION

Richard A. Curran
Regional Sales Manager

Environmental Instruments Division

108 South Street
Hopkinton, Massachusetts 01748
(617) 435-5321

INTERFERENCE RESPONSE TEST

DATE OF TEST JAN 18, 1980

ANALYZER TYPE 10AR RANGE 0-25PPM SERIAL NO. 10AR-014B-80

TEST GAS TYPE	CONCENTRATION PPM	ANALYZER OUTPUT RESPONSE	% OF SPAN
CO	500	< .1 PPM	<.1%
CO_2	201	< .1 PPM	< .1%
CO_2	10%	< .1 PPM	<.1%
O_2	20.9%	<.1 PPM	<.1%

HORIBA

NDIR QUALITY CONTROL SHEET

Trailer 2 CO_2 Analyzer

M.M.

MODEL Analyzer PIR-3000 OPE

SCALE, GAS 30/60/100 vol%, ppm CO_2 Gas

POWER SOURCE AC 115 V 60 Hz

OUT PUT 0~0.4V — mA CELL LENGTH 3 mm

#S NO 02811015

MFG NO 811015

Date Nov 26 1988 Temp 20 °C

Ambient Press 1008 m bar

Manuf. T. Urada

Inspector A. Shirabawa

A. INITIAL TEST RESULT

1. DRIFT Zero 0 Span 0.1 %FS (8, 12 Hr (1) 2 Day)

2. ALIGNMENT

	Main	Comp
Min.	1.0 %FS	— %FS
Offset	96.0 %FS	%FS

3. CALIBRATION

	Gas Conc vol%, ppm	Indication %FS	Gas Conc vol%, ppm	Indication %FS	Gas Conc vol%, ppm	Indication %FS
1	100	100.0				
2	80	84.3				
3	60	61.8				
4	40	37.1				
5	20	16.9				
6	0	0				

	Input mV	Output mV	Input mV	Output mV	Input mV	Output mV
0						
1						
2						
3						
4						
5						
6						
7						
8						
9						
10						

4. Parts No.

Main Det 807-0028

Comp Det —

Light Source 807-0005

Chopper Motor F-5

L.S. SUPPLY VOLTAGE

Sample 2.38 V

Ref −3.38 V

5. REPEATABILITY TEST

within 0.5, 1.0 ( ) %FS

6. NOISE

within %FS

0.3, 0.5, 0.8, 1.0, 1.2, 1.5

7. INTERRANGE CORELATION

R_1 100.0 %FS

R_2 55.3 %FS

R_3 47.0 %FS

R_4 — %FS

Span Gas Conc

100.0 vol%, ppm

8. INTERFERENCE of COEXISTING GAS TEST

Coexist. Gas	H_2O	CO	CH_4					
Gas Conc	20 °C	4.8 vol% ppm	100 vol% ppm	vol% ppm	vol% ppm	vol% ppm		
Interfered Val.	0	0	0					(%FS)
Interfered Val.	0	0	0					(ppm)

9. ELECTRICAL RESPONSE TIME 0.5, 1.0, 2.0, 3.0, 10.0, (1.2) Sec.

10. STABILITY TEST OF LINE VOLTAGE Variation 0.2 %FS 115 V± 12 V

11. STABILITY TEST OF AMBIENT AIR TEMP Variation — %FS — °C± — °C

12. FLUCTUATION OF SAMPLE FLOW RATE Variation 0.3 %FS 0.5 ~ 2.0 ℓ/min.

13. LINE INSURATION 1000 MΩ (with D.C. 1000 V Megger)

14. MAIN — %FS/ Hr Zero pot 1.70 Span pot 5.38

COMP — %FS/ Hr

Scott Specialty Gases
a division of
Scott Environmental Technology, Inc.
3714 LAPAS DRIVE, HOUSTON, TEXAS 77023. (713) 644-4820, FAX 644-0244

CUBIX CORP.
P.O. BOX 5083
AUSTIN, TX. 78763

Date: MARCH 30, 1989
Our Project No.: 716524-1
Your P.O. No.: F89037

Gentlemen:
Thank you for choosing Scott for your Specialty Gas needs. The analyses for the gases ordered, as reported by our laboratory, are listed below. Results are in volume percent, unless otherwise indicated.

ANALYTICAL REPORT

Cyl No. AAL16144 Analytical Accuracy ±1%

Component MOL%	Concentration
CARBON DIOXIDE	12.00% ±0.02% Abs
OXYGEN	8.04% ±0.02% Abs
NITROGEN	BALANCE

Cyl No. _____ Analytical Accuracy _____

Component	Concentration

Cyl No. _____ Analytical Accuracy _____

Component	Concentration

Cyl No. _____ Analytical Accuracy _____

Component	Concentration

Analyst D. E. Kelly

Approved By

The only liability of this Company for gas which fails to comply with this analysis shall be replacement thereof by the company without extra cost.

CERTIFIED REFERENCE MATERIALS EPA PROTOCOL GASES
ACUBLEND™ CALIBRATION & SPECIALTY GAS MIXTURES PURE GASES
ACCESSORY PRODUCTS CUSTOM ANALYTICAL SERVICES

TROY, MICHIGAN / SAN BERNARDINO, CALIFORNIA / HOUSTON, TEXAS / BATON ROUGE, LOUISIANA / AUSTIN, TEXAS
SOUTH PLAINFIELD, NEW JERSEY / FREMONT, CALIFORNIA / WAKEFIELD, MASSACHUSETTS / LONGMONT, COLORADO

Scott Specialty Gases
a division of
Scott Environmental Technology, Inc.
3714 LAPAS DRIVE, HOUSTON, TEXAS 77023, (713) 644-4820, FAX 644-0244

CUBIX CORP.
P.O. BOX 5083
AUSTIN, TX. 78763

Date: MARCH 17, 1989
Our Project No.: 716524
Your P.O. No.: F89037

Gentlemen:
Thank you for choosing Scott for your Specialty Gas needs. The analyses for the gases ordered, as reported by our laboratory, are listed below. Results are in volume percent, unless otherwise indicated.

ANALYTICAL REPORT

Cyl No. AAL7912 Analytical Accuracy ±1%

Component	Concentration
CARBON MONOXIDE	4310 PPM
PROPANE	4000 PPM
NITROGEN	BALANCE

Cyl No. AAL18938 Analytical Accuracy ±1%

Component	Concentration
CARBON MONOXIDE	907 PPM
PROPANE	850 PPM
NITROGEN	BALANCE

Cyl No. ALM4095 Analytical Accuracy ±1%

Component	Concentration
CARBON MONOXIDE	150 PPM
PROPANE	80.1 PPM
NITROGEN	BALANCE

Cyl No. AAL2309 Analytical Accuracy ±1%

Component	Concentration
CARBON DIOXIDE	4.01% ±0.02% Abs
OXYGEN	18.00% ±0.02% Abs
NITROGEN	BALANCE

Analyst

Approved By

The only liability of this Company for gas which fails to comply with this analysis shall be replacement thereof by the company without extra cost.

CERTIFIED REFERENCE MATERIALS EPA PROTOCOL GASES
ACUBLEND CALIBRATION & SPECIALTY GAS MIXTURES PURE GASES
ACCESSORY PRODUCTS CUSTOM ANALYTICAL SERVICES

TROY, MICHIGAN / SAN BERNARDINO, CALIFORNIA / HOUSTON, TEXAS / BATON ROUGE, LOUISIANA / AUSTIN, TEXAS
SOUTH PLAINFIELD, NEW JERSEY / FREMONT, CALIFORNIA / WAKEFIELD, MASSACHUSETTS / LONGMONT, COLORADO

M-5 Thermometer Calibration

February 16, 1989

Thermometer	NBS	Hot Box	Last Imp.	DGM
Temp. Range	(0-51°C)	(50-500°F)	(25-125°F)	(0-140°F)
Ambient Air	75.5°F (24.2°C)	73°F	73°F	75°F
Ice Bath	35°F (1.7°C)	NR	36°F	35.5°F
Hot Water	119.7°F (48.7°C)	117°F	118.5°F	120°F

METER BOX DRY GAS METER and ORIFICE CALIBRATION

Date: 9/11/89
Date of Previous Calibration: 4/26/89
Location: Austin Laboratory
Technician: RJK
Meter #: Nutech # 1529795
Atm. Pressure: 29.77

Test Meter ID P164240
Make & Model American DTM-115
Calibration Factor 1.001

		Meter Box				Standard Test Meter					
Orifice Meter Setting ΔH (In. H20)	Elapsed Time (min.)	Starting Reading ft3	Ending Reading ft3	Starting Avg. Temp °F	Ending Avg. Temp (°F)	Starting Reading (ft3)	Ending Reading (ft3)	Starting Avg. Temp (°F)	Ending Avg. Temp (°F)	Calculated Meter Factor (Kd)	Calculated ΔH@ 0.75 SCFM (" H2O)
0.25	5.00	432.900	434.265	78	80	0.000	1.400	74	74	1.0356	1.793
0.50	5.00	434.600	436.465	81	83	1.740	3.655	74	74	1.0419	1.906
1.00	10.00	436.700	442.075	83	88	3.888	9.300	74	74	1.0271	1.897
1.50	10.00	442.300	448.965	88	91	9.530	16.137	74	74	1.0173	1.895
2.00	10.00	449.300	456.855	91	95	16.468	23.910	74	74	1.0161	1.979
2.50	10.00	457.200	465.560	95	96	24.245	32.420	74	74	1.0120	2.041
Averages:				86	88.8			74.0	74	1.0250	1.918

Testing by Cubix Corporation

MAGNEHELIC GAUGE CALIBRATION SHEET

Date: 10-12-88

Magnehelic Gauge(s): 741, 5650, 5141

Meter Box No.: 1529795

Reference Gauge: Inclined Manometer from #2 Trailer

Technician: David E. Cavness

Reference Pressures (inches H_2O)	Magnehelic Gauge Response (inches H_2O) Gauge Ranges 0-.5	0-2	0-10	% Difference Gauge Ranges 0-.5	0-2	0-10
.25	.25	.25	.25	0.0	0.0	0.0
.46	.45	.47	.45	2.22	2.13	2.22
.78	—	.77	.79	—	1.3	1.27
1.15	—	1.1	1.15	—	4.55	0.0
2.0	—	1.9	2.0	—	5.26	0.0
3.2	—	—	3.2	—	—	0.0
5.0	—	—	5.0	—	—	0.0
8.2	—	—	8.15	—	—	.6

Nutech ΔH Graph

Orifice Calibration Curve - Nutech Control Unit (9-12-89)

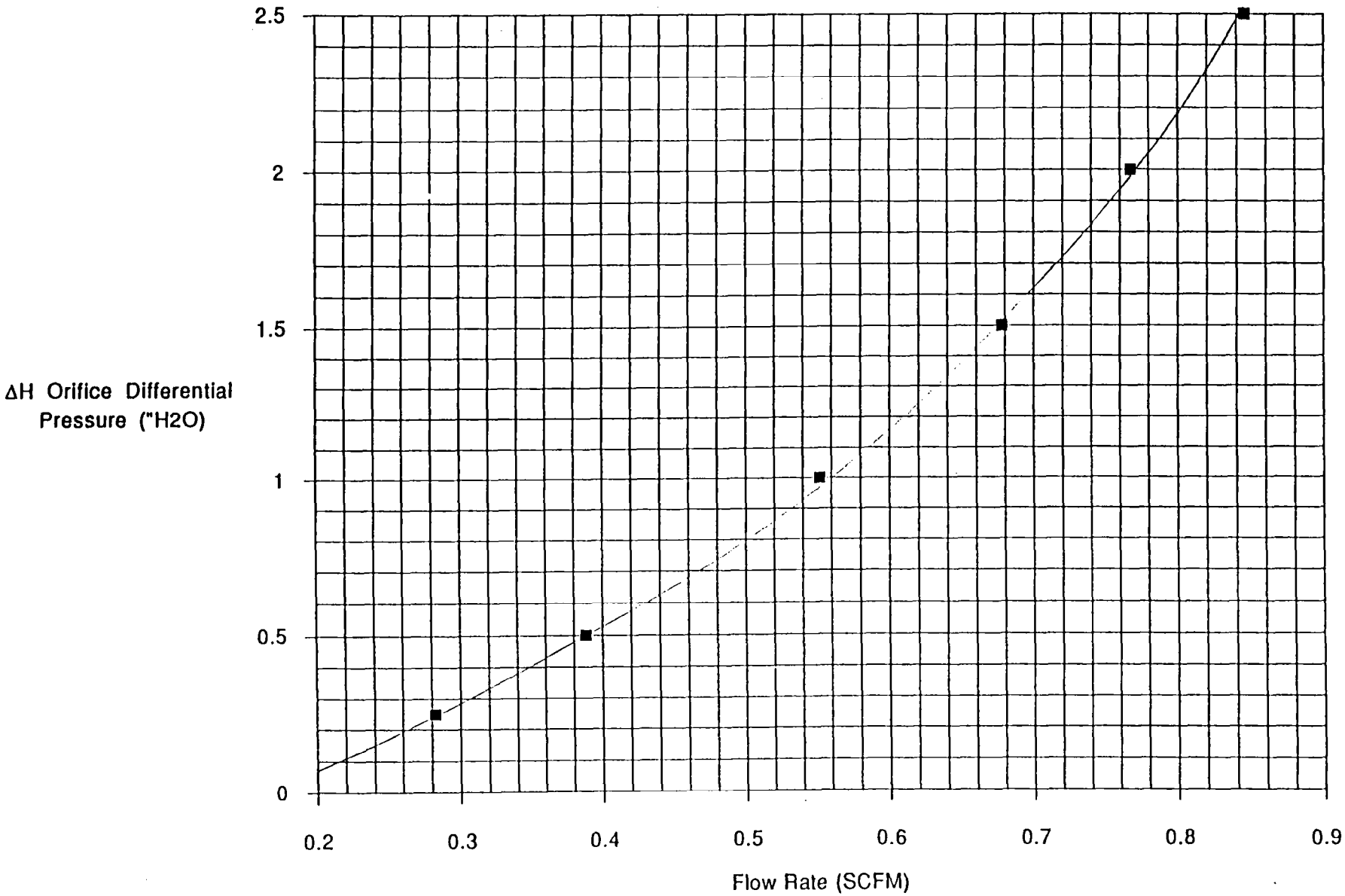

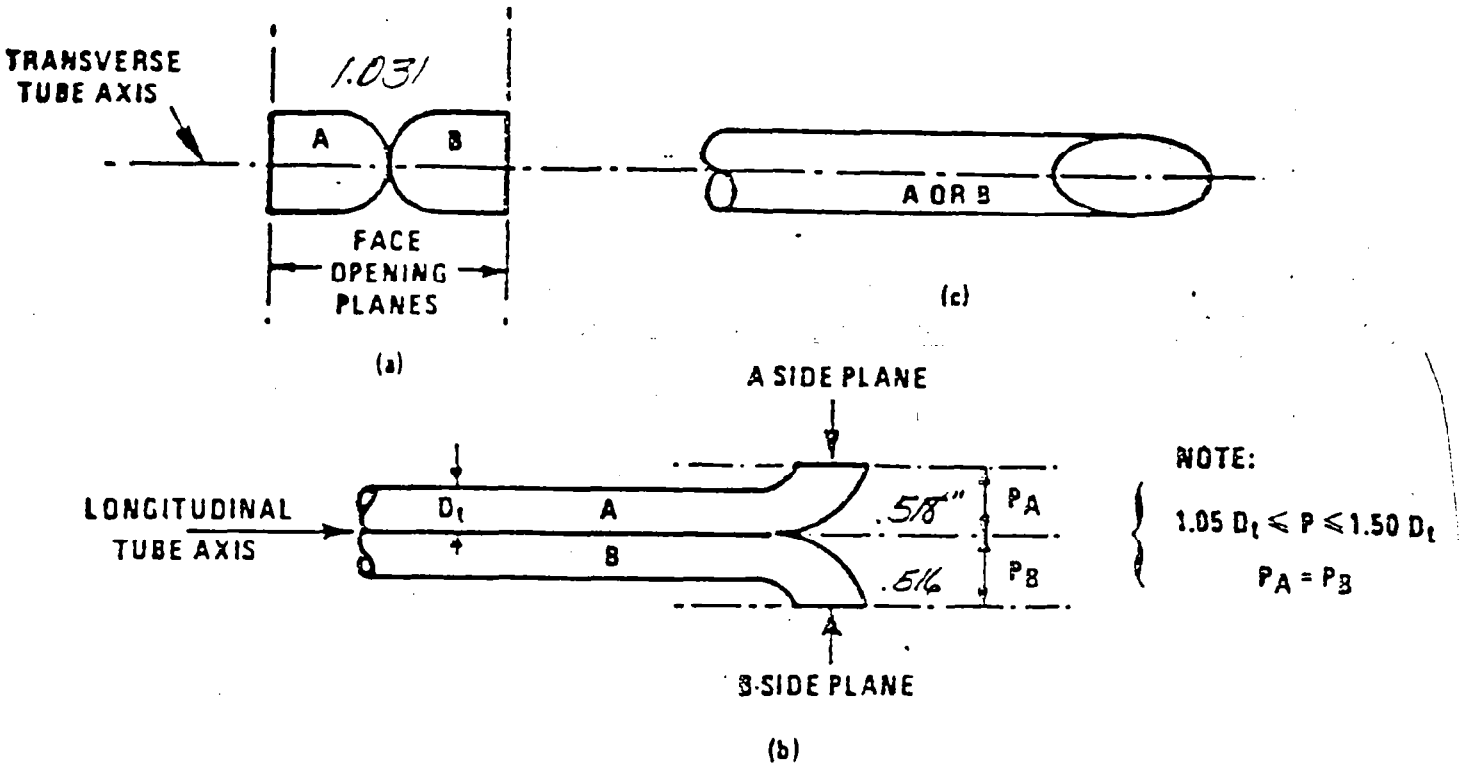

Figure 2-2. Properly constructed Type S pitot tube, shown in: (a) end view; face opening planes perpendicular to transverse axis; (b) top view; face opening planes parallel to longitudinal axis; (c) side view; both legs of equal length and centerlines coincident, when viewed from both sides. Baseline coefficient values of 0.84 may be assigned to pitot tubes constructed this way.

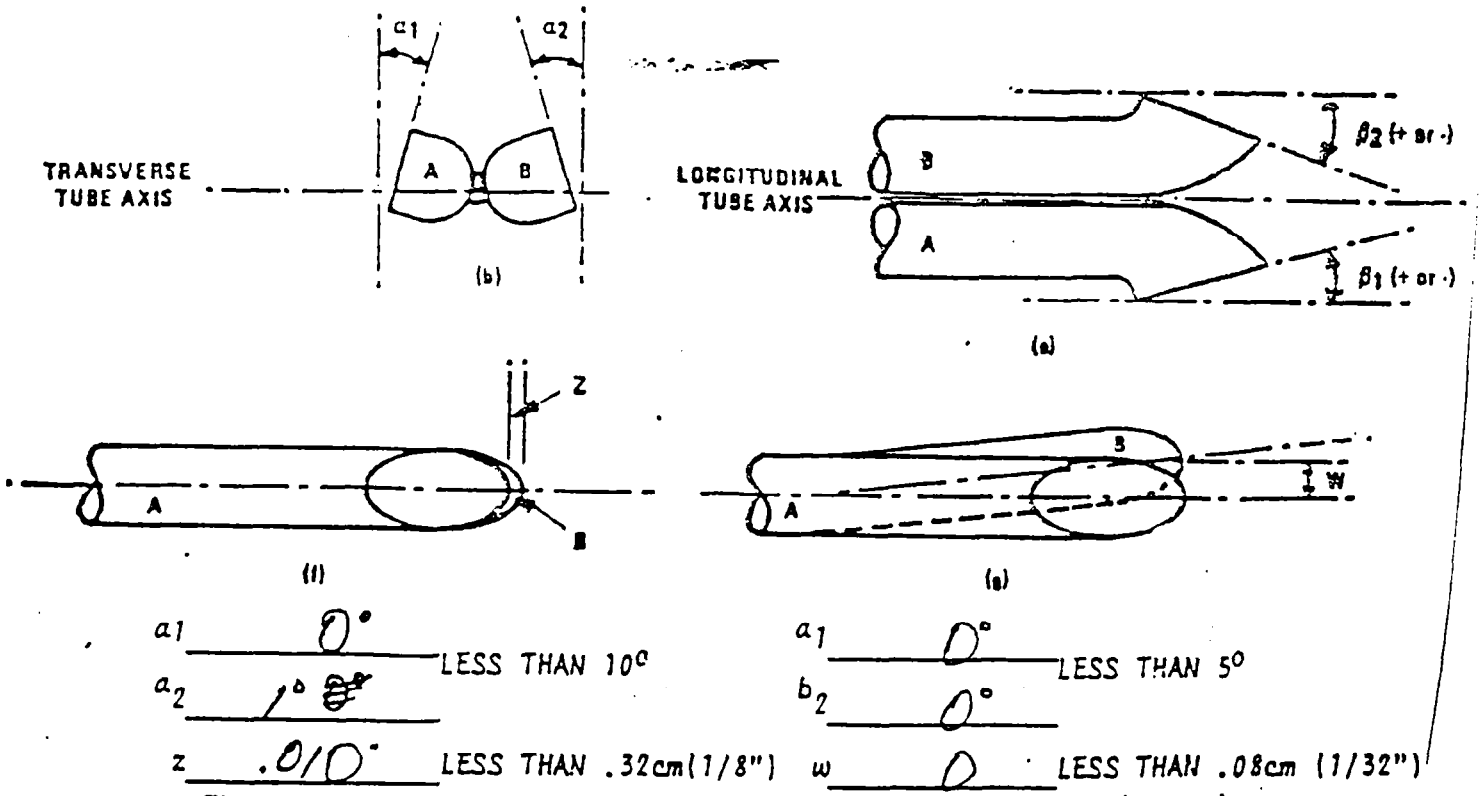

Figure 2-3. Types of face-opening misalignment that can result from field use or improper construction of Type S pitot tubes. These will not affect the baseline value of $\bar{C}p(s)$ so long as α_1 and $\alpha_2 < 10^o$, β_1 and $\beta_2 < 5^o$, $z < 0.32$ cm (1/8 in.) and $w <$ 0.08 cm (1/32 in.) (citation 11 in Section 6).

Personnel Pump Calibration

	511911
Rotameter Rd.	Actual Flow
1	0.8206
2	1.923
3	2.6931
4	3.7952
5	4.827

	511942
Rotameter Rd.	Actual Flow
1	1.0464
2	2.1614
3	2.9688
4	3.8684
5	5.137

	502675
Rotameter Rd.	Actual Flow
1	0.7229
2	1.8952
3	2.7186
4	3.6788
5	4.6585
	502681

	502681
Rotameter Rd.	Actual Flow
1	0.9674
2	1.8293
3	2.5467
4	3.2895
5	4.2949
	502681

Calibration Conducted by CUBIX CORPORATION, Austin, TX

Calibration Curve

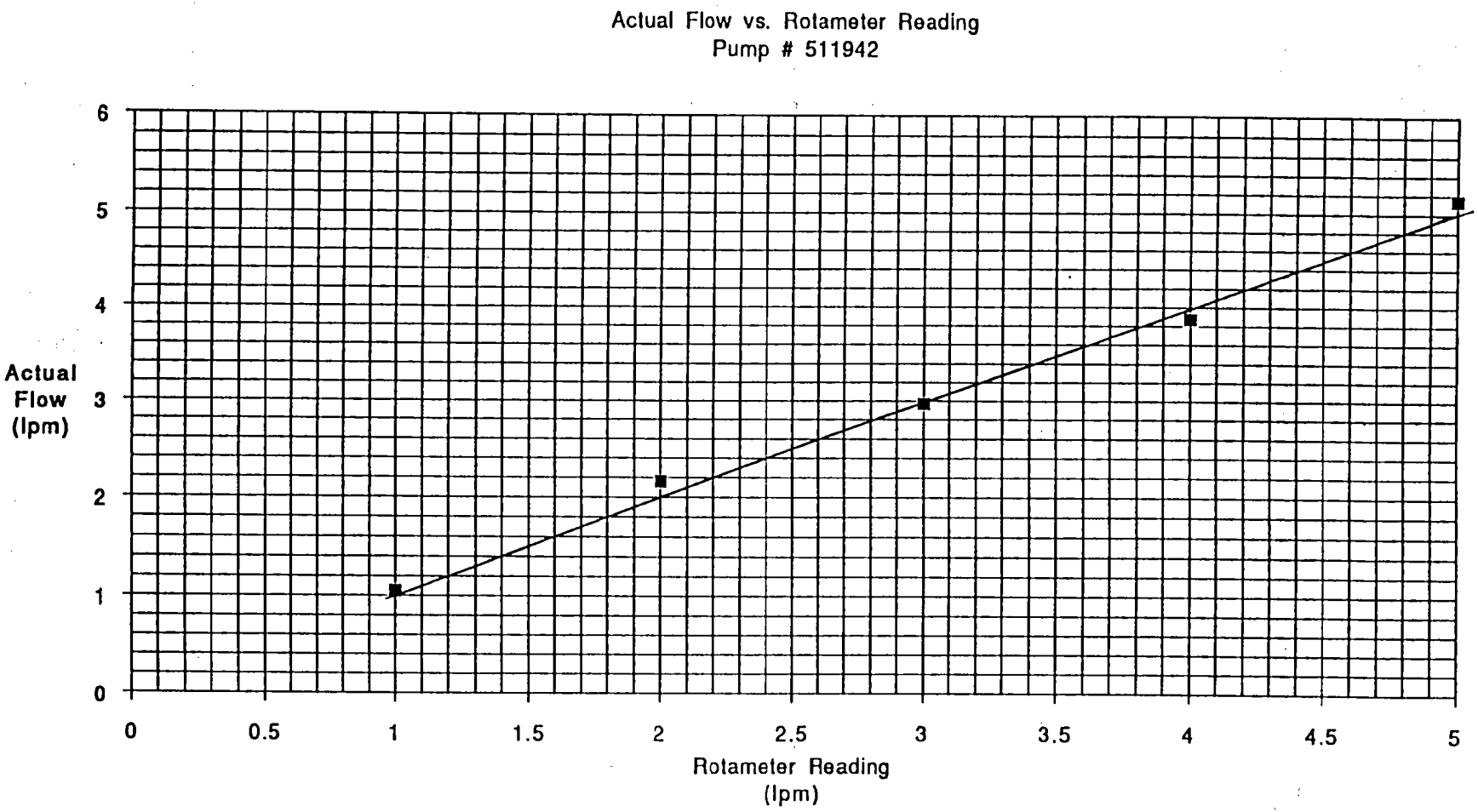

Testing by Cubix Corporation

Calibration Curve

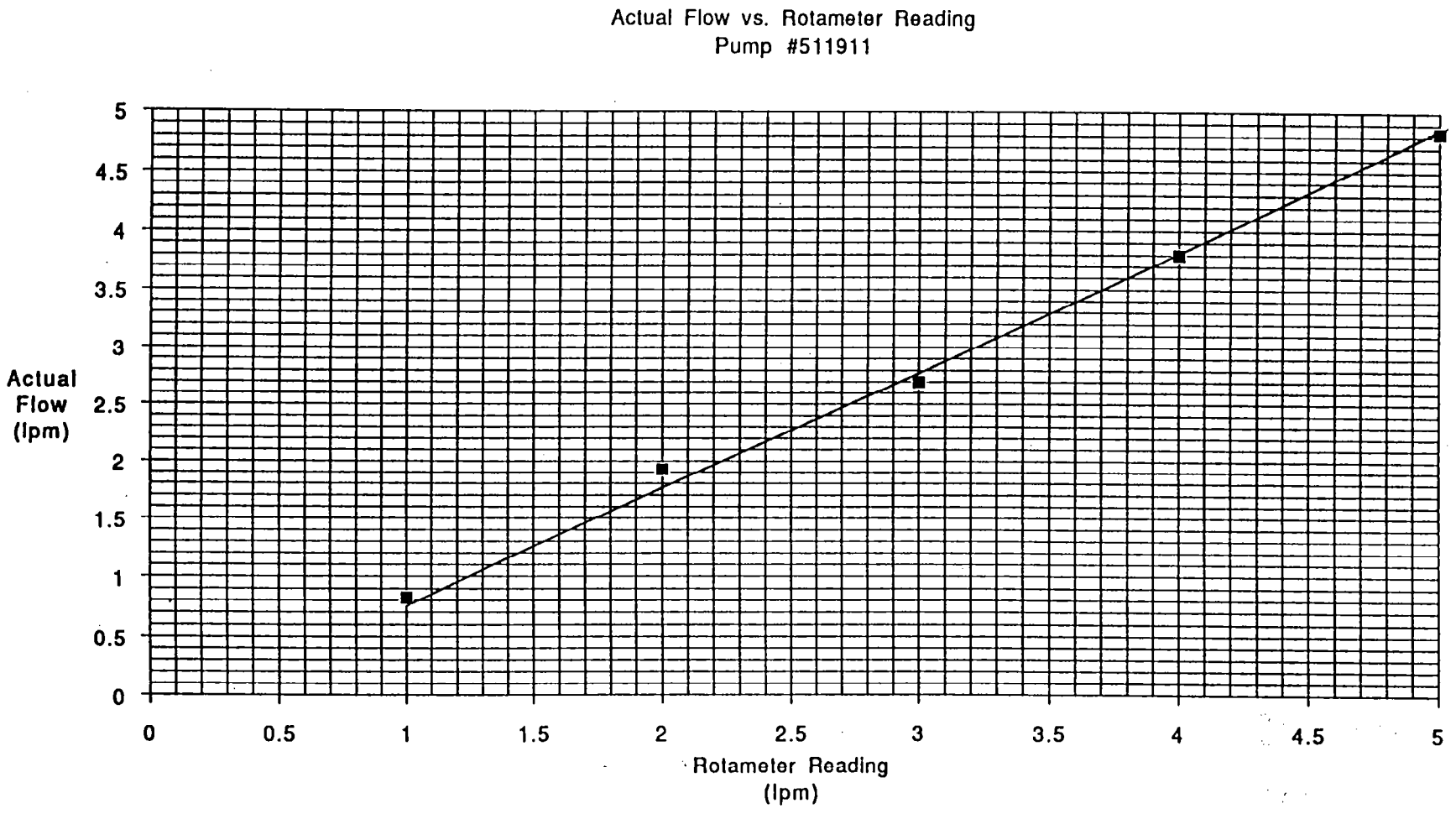

Testing by Cubix Corporation

Calibration Curve

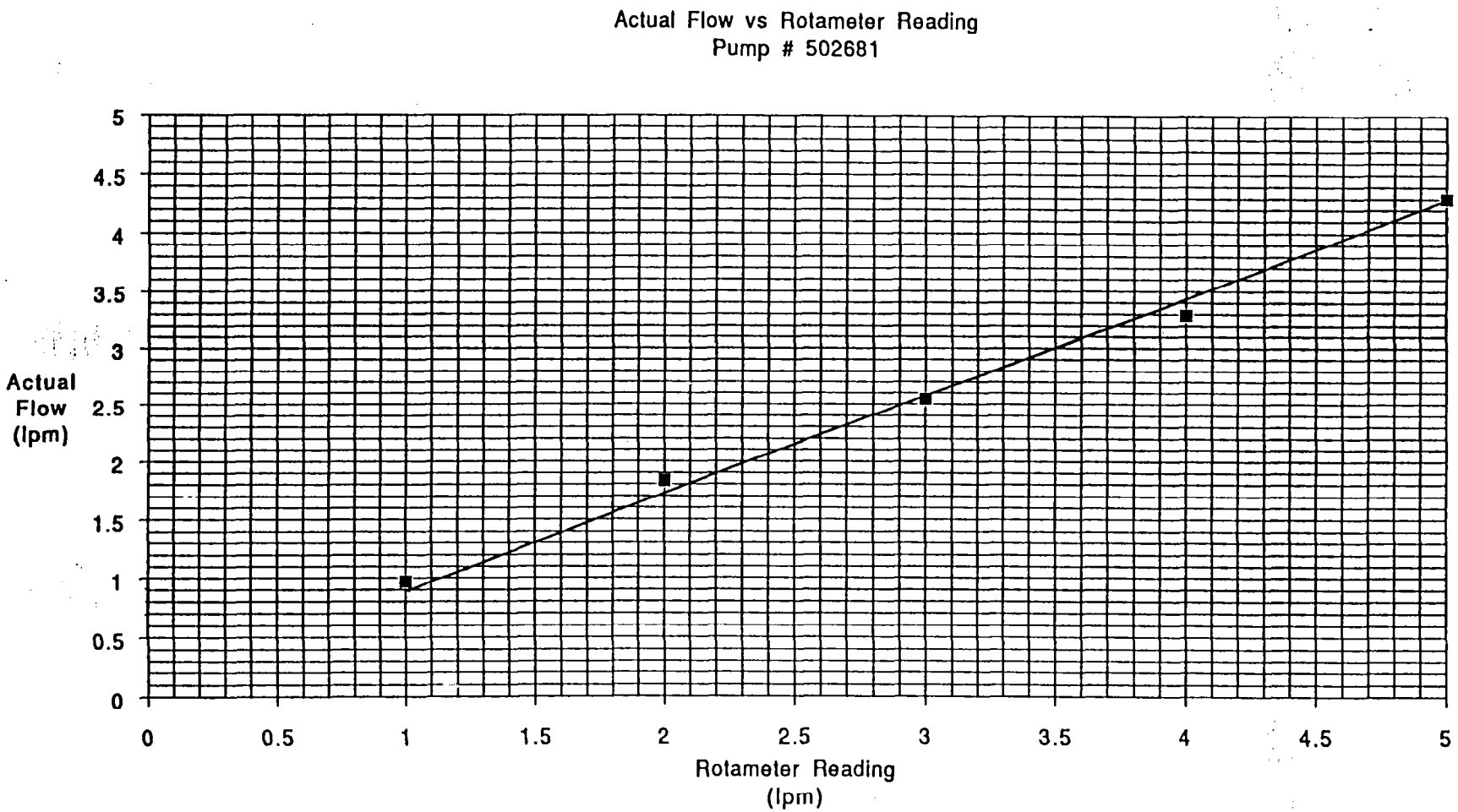

Testing by Cubix Corporation

Calibration Curve

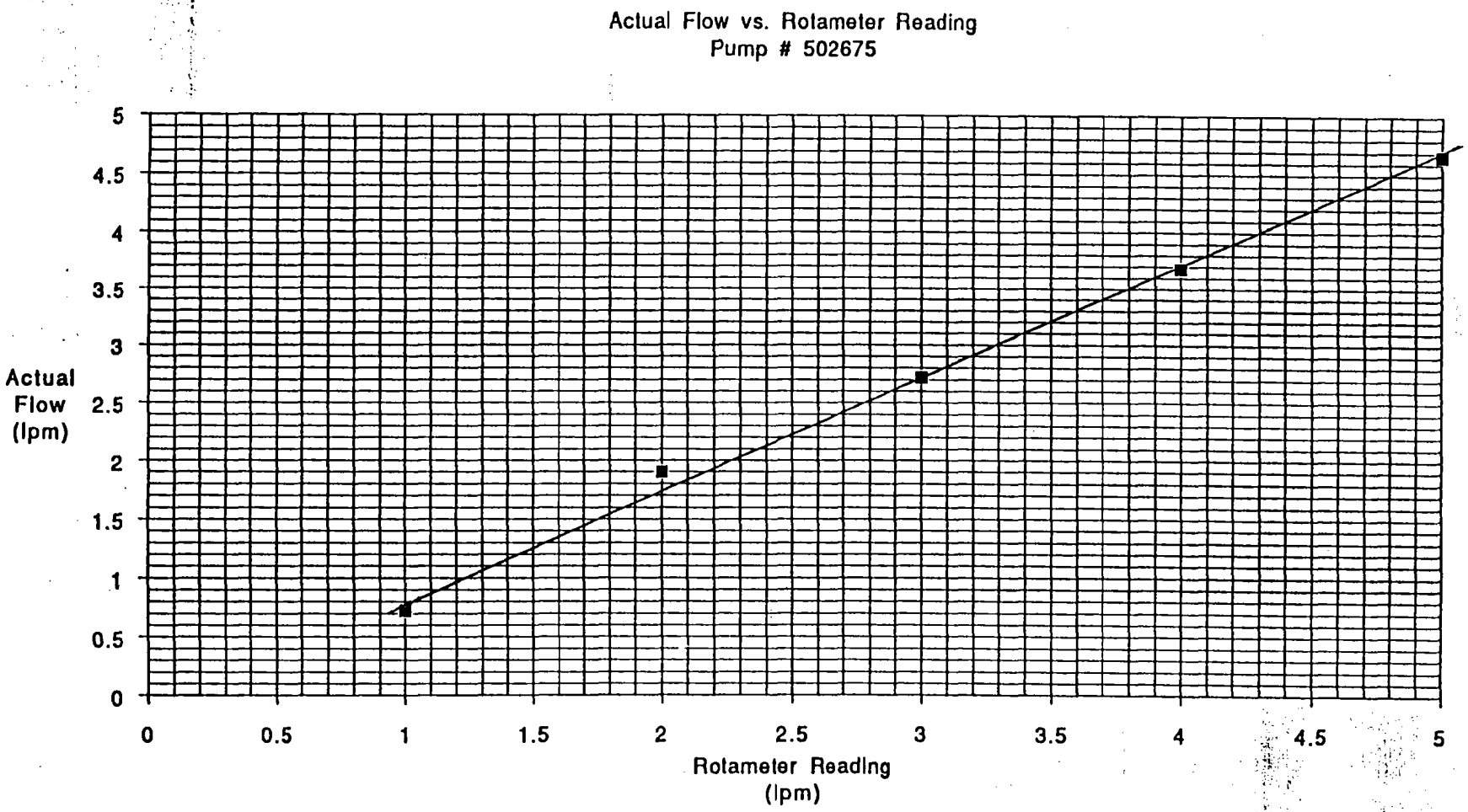

Testing by Cubix Corporation

8.10
BR CH.4 HB

TEXAS AIR CONTROL BOARD

6330 HWY. 290 EAST, AUSTIN, TEXAS 78723, 512/451-5711

DICK WHITTINGTON, P.E.
CHAIRMAN

BOB G. BAILEY
VICE CHAIRMAN

ALLEN ELI BELL
EXECUTIVE DIRECTOR

JOHN L. BLAIR
MARCUS M. KEY, M.D.
OTTO R. KUNZE, Ph.D., P.E.
HUBERT OXFORD, III
WILLIAM H. QUORTRUP
C. H. RIVERS
MARY ANNE WYATT

To: MV 2/5/90 R7-273
From: DH

Please review the attached report. The BAQC Review of the ~~report~~ sampling is also attached.

Tx.
Don

R7-273

Compliance Test Report
on
SULFUR EMISSIONS
at a
SULFURIC ACID PLANT

Prepared For

Rhone Poulenc

Houston, Texas

December 1989

Prepared by

Cubix Corporation

P.O. Box 5083, Austin, Texas 78763 □ (512) 444-5830

RECEIVED
JAN 26 1990
REGION 7
TEXAS AIR CONTROL BOARD

INVESTIGATOR REPORT

BUREAU OF AIR QUALITY CONTROL

TYPE OF INVESTIGATION Stack Test
Investigation #431264

DATE December 14 - 15, 1989

TIME _____ TO _____

SOURCE NAME Rhone - Poulenc Chemical Co.

SITE NAME _____

SITE ADDRESS 8615 Manchester

PHONE _____

MAIL ADDRESS P. O. Box 5275, Houston, Tx 77262

SOURCE CONTACT Ken Kirskey

TITLE Environmental Manager

PREMISES USED FOR Sulfuric acid manufacture

TYPE OF POLLUTANT H_2SO_4, SO_2, and NO_x

SAMPLE _____

STATUS Undetermined

VIOLATION _____

REFERRAL _____

INVESTIGATED BY Shan Siddiqi / Hal Nichols ~~Shan Siddiqi, P.E./ Hal Nichols, P.E.~~

TITLE Engineers IV

SUPERVISOR DDesai
Dipak V. Desai, P.E.

NARRATIVE AND SUPPORT DATA

From December 12 thru 15, 1989 this company conducted stack compliance tests to estimate emissions of sulfuric acid mist from Regenerator No. 2 stack (for State Regulations compliance). Also, Unit No. 8 was tested for acid mist, SO_2 and NO_x emissions. Mr. Ken Kirskey was present along with Bureau personnel to observe sampling procedures for Unit #8 (Permit C-19282).

The test on the Unit No. 8 stack was conducted at two different process capacities. This unit will be retested after installation of a new catalytic reactor to ensure there is no net increase in emisssions after installation.

The following data was recorded in the control room monitors during the test:

Test date.....	Dec. 14, 1989	Dec. 15, 1989
Acid production rate, tons/day	1254	1689
Fire box temperature, ^oF	1687	1880
SO_2 monitor reading, ppm	1910	1870
Blower speed, RPM	2700	3700

The sample probe was made of borosilicate glass at the tip of which was a stainless steel nozzle. We did not observe any dents or nicks on the probe. These checks were made before and after the tests.

EPA Method 8 was used to determine H_2SO_4 and SO_2 concentration where 3 samples were taken for each capacity. Each sample required 84 minutes (12 samples x 7 minutes each sample). They were sampling at an average rate of .59 $ft.^3$ per minute and obtaining an average sample volume of 44.64 $ft.^3$.

Samples to be analyzed for NO_x concentration were collected in mylar bags coated with aluminum; the rate of collection was about 0.2 l per minute, for 30 minutes.

Sulfuric acid and sulfur dioxide content of the stack gases were determined by titration with barium perchlorate solution. Periodically slight turbidity was observed in burette (barium perchlerate solution). Bob Manley checked the normality to ensure there was no change.

EPA method requires H_2SO_4 determination from the solution collected in the first impinger. The solutions of the second and third impinger are collectively used for determination of sulfur dioxide. During titrations (H_2SO_4 determination) it was observed that the solution consumed an enormous quantity of barium perchlarate.

Next day Mr. Manley clarified this discrepancy. Instead of using the first impinger solution to determine H_2SO_4, he had used the third impinger. Mr. Manley inquired if the sample would be acceptable. We told him that we do not approve deviations from the Standard EPA procedures. In our opinion this particular sample should be rejected because of the following reasons:

(a) SO_2 determination procedure requires combination of soulutions of impingers 2 and 3. Solution taken only from impinger 3 will give erroneous results.

ontinue

(b) The filter paper was added to the solution for SO_2 determination instead of H_2SO_4 concentration determination. This is yet another factor contributing to errors in estimation.

From the pretest meeting it appears that the company (Cubix) planned to analyze NO_x on site and in their lab (in Austin) and show that there was no degradaton of the sample. Yet during actual tests, NO_x was not analyzed on site.

City of Houston Bureau of Air Quality Control was not informed about the pretest meeting by the TACB or (this company).

It is highly recommended that in order for COH Engineers to participate and provide adequate evaluation of such stack tests, the TACB Stack Test Personnel and/or the company directly informs us of pretest meetings in advance.

SS:HN:lqg

VELOCITY TRAVERSE POINT LAYOUT

(Method 1, nonparticulate, circular stacks)

Date: 12/14/89

Plant: Phan Fowdne

Stack: Unit #8

Technician: BCM KJ, P

Stack I.D. 173.7 in.

Port Extension 9.75 in.

Stack Area (A) 164.6 ft^2

Stack Diagram (side view)

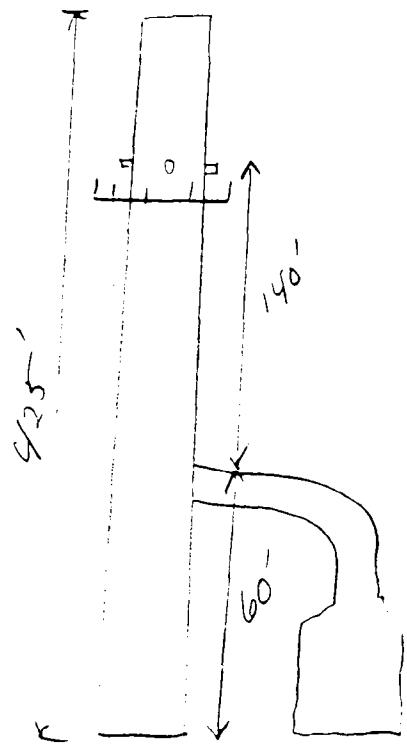

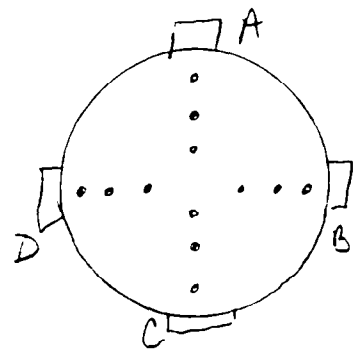

Traverse Point Number	Column A Length Factor (K_L)	Column B (K_L) x (stack ID)	
1	4.4	7.64	17.4
2	14.6	25.41	35.1
3	29.6	51.4	61.2
4	70.4		
5	85.4		
6	95.6		
7			
8			
9			
10			
11			
12			

1) Measure from the tip of the pitot tube a distance equal to the port extension and mark this as a reference point.

2) Measure the distances in column B from the reference point to the traverse points.

Stack Velocity and Flow Rate Worksheet

Date 12-14 [illegible]
Plant: Rhone Poulenc
Stack: UNIT #8
Technician(s): [illegible]
Test Run No.: P-1
Time Start: [illegible] Stop [illegible]

Pitot Tube No. [illegible]
Pitot Tube Factor (Kp) [illegible]
Atm. Press (Pb) 30.22 in. Hg
Avg. Stack Temp.(Ts) _____ °F
Stack Gas Mol. Wt. _____ lb/lb-mole
Stack Static Pressure (Pg) [illegible] in H_2O
Stack Area (A) _____ ft^2

Traverse Point	ΔP (inches H_2O) A	B
1	[illegible]	[illegible]
2	[illegible]	[illegible]
3	[illegible]	[illegible]
4	[illegible]	[illegible]
5	[illegible]	[illegible]
6	[illegible]	[illegible]
7	[illegible]	[illegible]
8		
9		
10		
11		
12		

Absolute Stack Pressure (Ps)

Ps = Pb + (Pg x 0.0735)

_____ = _____ + (_____ x 0.0735)

Average $\sqrt{\Delta P}$

$$\text{Average } \Delta P = \frac{\Sigma \sqrt{\Delta P}}{\text{No. of Traverse Points}}$$

$$_____ = \frac{(_____)}{(_____)}$$

Stack Velocity (V)

$$V = 5128.8 \times Kp \times \text{Average}\sqrt{\Delta P} \times \sqrt{\frac{Ts}{Ps \times MW}}$$

$$_____ \text{ft/min} = 5128.8 \times _____ \times _____ \times \sqrt{\frac{_____ \text{°F} + 460}{_____ \text{in Hg} \times _____ \text{MW}}}$$

Stack Volumetric Flow, Qa, (at stack conditions)

Qa = V x A

_____ acfm = _____ ft/min x _____ ft^2

Stack Volumetric Flow, Qd, (dry basis at 68 °F and 29.92 in Hg)

$$Qd = Qa \times 1059 \times \frac{Ps}{Ts} \times Fd$$

$$_____ \text{scfh} = _____ \text{acfm} \times 1059 \times \frac{_____ \text{in. Hg}}{_____ \text{°F} + 460} \times _____ \text{Fd}$$

EPA Method 5 Stack Sampling Data Sheet

Plant Name:	[illegible]	Stack Height:	400'
Date:	12/14/89	Stack Diameter:	172.7
Source:	Unit 8	Stack moisture (% by volume)	0
Technicians:	[illegible]	Atm. Pressure:	30.62
Probe size:	6	K Factor:	63.41
Nozzle Area:	0.0017	PTCF:	0.84
Time: Start:	1330		
Pretest Leak check:	0		

DGM#:			
DGMCF:			
Mol. Wt.	28.64		
Static Pressure:	[illegible]		
Sample Time:	60		
No. of Sample Pts:			
Posttest Leak Check:	0.0		
Meter Reading: Initial:	747.070	Final:	787.310

Impinger Number	1	2	3	4
Contents	100 IPA	100 H2O		
Initial Wt. (g)				
Final Wt. (g)				

Run#: 1 Box#: 1
Filter #: N/A
Stop: 1430

Exhaust Gas Concentrations: CO2 (%): O2 (%):

-25 in Hg

Point	Clock Time	DGM Reading	ΔP (" H2O)	ΔH (" H2O)	Line Vac. ("Hg)	DGM Temp.(°F)	Hot Box Temp.(°F)	Stack Temp.(°F)	Last Imp. Temp.(°F)	Probe Temp.(°F)
1	0:00	747.07	0.040	2.54		65	67	109	53	176
2	5:00	751.08	0.040	2.54		65	68	108	54	178
3	10:00	754.64	0.038	2.40		68	70	109	54	174
4	15:00	758.09	0.038	2.40		72	72	108	55	177
5	20:00	761.39	0.030	1.90		73	73	107	56	179
6	25:00	764.680	0.028	1.78		75	74	108	58	180
7	30:00	767.851	0.025	1.58		76	78	109	60	180
8	35:00	771.20	0.020	1.27		80	74	108	62	181
9	40:00	774.581	0.021	1.33		83	75	107	64	182
10	45:00	777.050	0.020	1.27		86	76	108	66	187
11	50:00	780.750	0.065	4.0		88	76	107	65	180
12	55:00	783.720	0.040	2.54		92	76	108	66	178
	60:00	787.310	0.035	2.22		96	76	101	65	176
Totals or Avgs.						154		100		

Testing by Cubix Corporation

EPA Method 5 Stack Sampling Data Sheet

Plant Name:	Rhone Poulenc	Stack Height:	400'
Date:	12/14/91	Stack Diameter:	173.7
Source:	Unit 8	Stack moisture (% by volume)	0
Technicians:	BCM, KJ, JR	Atm. Pressure:	30.62
Probe size:	6"	K Factor:	28.53
Nozzle Area:	405	PTCF:	0.87
Time: Start:	1600	Stop:	1720
Pretest Leak check:	0.00		

DGM#:			
DGMCF:	1.001		
Mol. Wt.	28.64		
Static Pressure:	.13		
Sample Time:	84		
No. of Sample Pts:	12		
Posttest Leak Check:	0.00		
Meter Reading: Initial:	793.562	Final:	844.150

Impinger Number	1	2	3	4
Contents	80% IPA	10% H_2O_2	10% H_2O_2	
Initial Wt. (g)				
Final Wt. (g)				

Exhaust Gas Concentrations: CO2 (%): O2 (%):

Start → 793.562 0.040 1.14

Point	Clock Time	DGM Reading	ΔP ("H2O)	ΔH ("H2O)	Line Vac. ("Hg)	DGM Temp.(°F)	Hot Box Temp.(°F)	Stack Temp.(°F)	Last Imp. Temp.(°F)	Probe Temp.(°F)
1	1600	793.621	0.040	1.14		81	69	109	52	176
2	1400	[illegible]	0.025	[illegible]		[illegible]	69	[illegible]	50	178
3	21	[illegible]	[illegible]	[illegible]		[illegible]	[illegible]	[illegible]	50	176
4	[illegible]								53	
5	[illegible]	818.68	.020	0.57		91	77	109	52	
6	42	813.940	.020	0.57		92	76	[illegible]	55	179
7	47	817.17	.025	0.99		92	49	109	[illegible]	175
8	56	821.21	0.041	1.14		92	80	109	50	175
9	62	829.60	0.035	0.96		93	70	109	54	180
10	70	[illegible]	0.045	1.57		94	77	108	55	181
11	77	[illegible]	[illegible]	1.24		99	74	107	54	115
12	84	[illegible]	0.040	1.14		90	75	107	55	175
		844.150	[illegible]	1.14		90	74	[illegible]	56	120
Totals or Avgs.						92.1		108		

Testing by Cubix Corporation

EPA Method 5 Stack Sampling Data Sheet

Plant Name:	Rhone Poulenc		
Date:	12/14/89		
Source:	Unit 8		
Technicians:	BCM, [illegible], JP		
Probe size:	6'	Run#: 3	Box#: 3
Nozzle Area:	0.000855	Filter #: N/A	
Time: Start:	1515	Stop: 1715	
Pretest Leak check:	0.00		

Stack Height:	400'	DGM#:	
Stack Diameter:	173.7	DGMCF:	1.001
Stack moisture (% by volume)		Mol. Wt.	28.94
Atm. Pressure:	30.62	Static Pressure:	[illegible]
K Factor:	63.41	Sample Time:	84
PTCF:	0.84	No. of Sample Pts:	12
Posttest Leak Check:	0.00		
Meter Reading: Initial:	844.913	Final:	890.11

Impinger Number	1	2	3	4
Contents	[illegible]	6% H_2O_2	[illegible] H_2O_2	[illegible]
Initial Wt. (g)				
Final Wt. (g)				

Exhaust Gas Concentrations: CO2 (%): O2 (%):

Point	Clock Time	DGM Reading	ΔP (" H2O)	ΔH (" H2O)	Line Vac. ("Hg)	DGM Temp.(°F)	Hot Box Temp.(°F)	Stack Temp.(°F)	Last Imp. Temp.(°F)	Probe Temp.(°F)
1	0.00	844.913	0.05	1.13		91	54	106	51	130
2	7.00	849.000	[illegible]	1.14		91	53	109	51	[illegible]
3	14	854.170	[illegible]	1.14		93	55	110	52	[illegible]
4	21	859.01	[illegible]	0.99		93	54	112	[illegible]	[illegible]
5	28	[illegible]	0.05	0.99		96	57	[illegible]	[illegible]	136
6	[illegible]	[illegible]	0.05	0.99		95	[illegible]	[illegible]	[illegible]	[illegible]
7	[illegible]	[illegible]	[illegible]	0.12		97	60	[illegible]	[illegible]	[illegible]
8	[illegible]	[illegible]	0.02	0.57		98	61	111	[illegible]	[illegible]
9	[illegible]	[illegible]	[illegible]	0.57		91	62	110	51	[illegible]
10	[illegible]	[illegible]	[illegible]	0.72		99	63	109	52	[illegible]
11	[illegible]	[illegible]	0.20	0.57		99	64	115	[illegible]	[illegible]
12	[illegible]	[illegible]	0.20	0.57		98	64	111	[illegible]	129
	42	890.11	[illegible]	0.41		91	63	[illegible]	[illegible]	125
Totals or Avgs.						96.1		115		

Testing by Cubix Corporation

Stack Velocity and Flow Rate Worksheet

Date 12/15/89
Plant: [illegible]
Stack: Unit #8
Technician(s): [illegible]
Test Run No.: P-2
Time Start: _____ Stop _____

Pitot Tube No. S-type
Pitot Tube Factor (Kp) 0.84
Atm. Press (Pb) 30.56 in. Hg
Avg. Stack Temp.(Ts) 102 °F
Stack Gas Mol. Wt. 28.66 lb/lb-mole
Stack Static Pressure (Pg) _____ in H_2O
Stack Area (A) _____ ft^2

Traverse Point	ΔP (inches H_2O) A	B
1	[illegible]	[illegible]
2	[illegible]	[illegible]
3	[illegible]	
4	[illegible]	
5	[illegible]	
6	[illegible]	
7	[illegible]	
8		
9		
10		
11		
12		

Absolute Stack Pressure (Ps)

Ps = Pb + (Pg x 0.0735)

_____ = _____ + (_____ x 0.0735)

Average $\sqrt{\Delta P}$

$$\text{Average } \Delta P = \frac{\Sigma \sqrt{\Delta P}}{\text{No. of Traverse Points}}$$

$$_____ = \frac{(_____)}{(_____)}$$

Stack Velocity (V)

$$V = 5128.8 \times Kp \times \text{Average}\sqrt{\Delta P} \times \sqrt{\frac{Ts}{Ps \times MW}}$$

$$_____ \text{ft/min} = 5128.8 \times _____ \times _____ \times \sqrt{\frac{_____ \text{°F} + 460}{_____ \text{in Hg} \times _____ \text{MW}}}$$

Stack Volumetric Flow, Qa, (at stack conditions)

Qa = V x A

_____ acfm = _____ ft/min x _____ ft^2

Stack Volumetric Flow, Qd, (dry basis at 68 °F and 29.92 in Hg)

$$Qd = Qa \times 1059 \times \frac{Ps}{Ts} \times Fd$$

$$_____ \text{scfh} = _____ \text{acfm} \times 1059 \times \frac{_____ \text{in. Hg}}{_____ \text{°F} + 460} \times _____ \text{Fd}$$

EPA Method 5 Stack Sampling Data Sheet

Plant Name:	Rhône Poulenc	Stack Height:	400
Date:	12/15/89	Stack Diameter:	[illegible]
Source:	Unit 8	Stack moisture (% by volume)	0
Technicians:	KJ, JR, RCM	Atm. Pressure:	30.58
Probe size:	6'	Run#: C4	Box#: 1
Nozzle Area:	0.00076	Filter #:	N/A
Time: Start:	[illegible]	Stop:	[illegible]
Pretest Leak check:	[illegible]	K Factor:	[illegible]
		PTCF:	0.811
		Posttest Leak Check:	0.00
		Meter Reading: Initial:	860.440

DGM#:			
DGMCF:	1.001		
Mol. Wt.			
Static Pressure:	.43		
Sample Time:	66		
No. of Sample Pts:	12		
Final:	935.640		

Impinger Number	1	2	3	4
Contents	80% IPA	[illegible]	[illegible]	[illegible]
Initial Wt. (g)				
Final Wt. (g)				

Exhaust Gas Concentrations: CO2 (%): O2 (%):

Point	Clock Time	DGM Reading	Δ P (" H2O)	ΔH (" H2O)	Line Vac. ("Hg)	DGM Temp.(°F)	Hot Box Temp.(°F)	Stack Temp.(°F)	Last Imp. Temp.(°F)	Probe Temp.(°F)
						[illegible]		[illegible]	[illegible]	
		[illegible]		[illegible]		[illegible]	[illegible]	127	[illegible]	
		897 [illegible]	[illegible]	[illegible]		63		[illegible]	[illegible]	[illegible]
				[illegible]			[illegible]	[illegible]	66	73
		[illegible]		[illegible]		71	[illegible]	[illegible]	[illegible]	[illegible]
							[illegible]	121	[illegible]	[illegible]
			[illegible]	[illegible]		[illegible]	73	[illegible]	63	160
		[illegible]	[illegible]	[illegible]		[illegible]	[illegible]	[illegible]		[illegible]
		[illegible]				[illegible]	75	125	[illegible]	176
		[illegible]		[illegible]			71	[illegible]	65	
	[illegible]	[illegible]	[illegible]	[illegible]		[illegible]	72	125		[illegible]
	[illegible]	[illegible]		[illegible]		75	12	[illegible]	[illegible]	[illegible]
			[illegible]	[illegible]		[illegible]	[illegible]	[illegible]	[illegible]	[illegible]
Totals or Avgs.						69		123	64	

Testing by Cubix Corporation

EPA Method 5 Stack Sampling Data Sheet

Plant Name:	[illegible]	Stack Height:	405'
Date:	12-15-89	Stack Diameter:	173.2
Source:	Unit 8	Stack moisture (% by volume)	0
Technicians:	K.J., JR, DCM	Atm. Pressure:	30.58
Probe size:	6'	K Factor:	18.53
Nozzle Area:	0.00076	PTCF:	0.84
Time: Start:	11:30	Stop:	13:00
Pretest Leak check:	0.00	Posttest Leak Check:	0.00
Run#:	C-5	Box#:	2
Filter #:	N/A		
DGM#:			
DGMCF:	[illegible]		
Mol. Wt.			
Static Pressure:	[illegible]		
Sample Time:	60		
No. of Sample Pts:	12		
Meter Reading: Initial:	[illegible]	Final:	978.665

Impinger Number	1	2	3	4
Contents	80% IPA	6% H_2O_2	6% H_2O_2	Silgel
Initial Wt. (g)				
Final Wt. (g)				

Exhaust Gas Concentrations: CO2 (%): O2 (%):

Point	Clock Time	DGM Reading	Δ P (" H2O)	ΔH (" H2O)	Line Vac. ("Hg) -11	DGM Temp.(°F)	Hot Box Temp.(°F)	Stack Temp.(°F)	Last Imp. Temp.(°F)	Probe Temp.(°F)
1	[illegible]	[illegible]	0.080	1.46		77	[illegible]	127	53	143
[illegible]	1130	[illegible]	0.070	[illegible]		77	[illegible]	[illegible]	[illegible]	145
	1135	[illegible]	[illegible]	1.46		[illegible]	[illegible]	[illegible]	[illegible]	165
[illegible]	[illegible]	[illegible]	[illegible]	[illegible]		[illegible]	14	[illegible]	57	[illegible]
[illegible]		149.210	[illegible]	0.64		[illegible]	74	[illegible]	56	[illegible]
[illegible]	2	[illegible]	[illegible]			[illegible]	13	[illegible]	56	165
	23[illegible]	955.010	[illegible]						7	170
[illegible]	[illegible]	[illegible]	[illegible]	1.54		93	80	[illegible]	58	173
	4[illegible]	[illegible]	0.070	1.65		85	81	[illegible]	60	112
[illegible]	4930	966.585	[illegible]	1.82		86	85	[illegible]	62	156
[illegible]	[illegible]	[illegible] 140	[illegible]	1.85		87	84	[illegible]	63	158
[illegible]	[illegible]	979.735	[illegible]	1.60		88	83	[illegible]	65	160
	[illegible]	[illegible]	0.075	1.37		89	83	[illegible]	[illegible]	165
Totals or Avgs.						83		124		

Testing by Cubix Corporation

EPA Method 5 Stack Sampling Data Sheet

Plant Name:	Rhône Poulenc	Stack Height:	400'
Date:	12 15 89	Stack Diameter:	17.7
Source:	UNIT 0	Stack moisture (% by volume)	0
Technicians:	[illegible]	Atm. Pressure:	30.58
Probe size:	[illegible]	Run#: C-6	Box#: [illegible]
Nozzle Area:	0.00076	Filter #:	N/A
Time: Start:	[illegible]	Stop:	[illegible]
Pretest Leak check:	0.03		

DGM#:	[illegible]		
DGMCF:	1.001		
Mol. Wt.			
Static Pressure:	0.41		
Sample Time:	[illegible]		
No. of Sample Pts:	12		
Posttest Leak Check:	0.03		
Meter Reading: Initial:	[illegible]	Final:	[illegible]

Impinger Number	1	2	3	4
Contents	80% IPA	6% H_2O_2	6% [illegible]	Silica
Initial Wt. (g)	N/A	"	"	"
Final Wt. (g)	N/A	"		"

Exhaust Gas Concentrations: CO2 (%): O2 (%):

Point	Clock Time	DGM Reading	ΔP ("H2O)	ΔH ("H2O)	Line Vac. ("Hg)	DGM Temp.(°F)	Hot Box Temp.(°F)	Stack Temp.(°F)	Last Imp. Temp.(°F)	Probe Temp.(°F)
1	[illegible]	[illegible]	0.10	[illegible]	12	[illegible]	[illegible]	[illegible]	53	[illegible]
	[illegible]	[illegible]	[illegible]	[illegible]		[illegible]	76	[illegible]	55	[illegible]
	[illegible]	[illegible]	[illegible]	[illegible]		[illegible]	82	[illegible]	56	[illegible]
		[illegible]	[illegible]	1.27		79	82	[illegible]	[illegible]	155
		[illegible]	[illegible]	[illegible]		80	[illegible]	[illegible]	[illegible]	[illegible]
	[illegible]	[illegible]	[illegible]	1.13		[illegible]	75	[illegible]	[illegible]	[illegible]
	[illegible]	[illegible]	[illegible]	[illegible]		79	[illegible]		[illegible]	138
	[illegible]	[illegible]	0.35	0.64		78	79	[illegible]	[illegible]	170
	[illegible]	[illegible]	[illegible]	[illegible]		[illegible]	69	116	61	
	[illegible]	[illegible]		[illegible]		[illegible]	68	[illegible]		[illegible]
	501	017.631	[illegible]	1.55		77	68	[illegible]		120
	[illegible]	[illegible]	[illegible]	[illegible]		78	73	[illegible]	64	135
	[illegible]	[illegible]	[illegible]	[illegible]		78	69	[illegible]	65	133
Totals or Avgs.						77.7		120.5		

Testing by Cubix Corporation

Preliminary Summary of Results

12/14/89
Rhone Poulenc
Regen 2
Technicians: BCM, KJ, JR

Regen #2

Run No.	**C-1**	**C-2**	**C-3**	**Average**
Start Time	1236	1600	1825	
Stop Time	1500	1730	1955	
OPERATING DATA				
Fire Box Temperture (°F)	2000	2000	2000	**2000**
SO2 Monitor Reading (ppmv)	2400	2400	2400	**2400**
Acid Production (short tons)	700	700	700	**700**
Blower Speed (RPM)	3590	3575	3580	**3582**
Stack Velocity (SCFH)	3134976	3123359	2752325	**3003553**
SAMPLING DATA				
Beginning Meter Reading (ft3)	593.375	646.927	702.480	
Ending Meter Reading (ft3)	640.835	695.180	742.430	
Gas Meter Correction Factor	1.001	1.001	1.001	
Meter Temperature (°F)	74	74	63.2	
Meter Pressure (in Hg)	30.71	30.72	30.72	
Volume Sampled (SCF)	48.214	49.036	41.436	**46**
Normality of Titrant (N)	0.011	0.011	0.011	
ACID MIST				
Volume Collected (ml)	254.0	250.0	250.0	
Aliquot (ml)	100.0	100.0	100.0	
Average Titrant Volume (ml)	10.6	7.2	17.5	
SO2				
Volume Collected (ml)	100000	10000	10000	
Aliquot (ml)	20.0	10.0	10.0	
Average Titrant Volume (ml)	4.8	27.8	32.8	
EMISSIONS				
Acid Mist Concentration (lbs/dscf)	4.34E-07	2.85E-07	8.20E-07	**5.13E-07**
Acid Mist Concentration (ppmv)	2.61	1.71	4.93	**3.08**
Acid Mist Emissions (lbs/hr)	1.36	0.89	2.26	**1.50**
SO2 Concentration (lbs/dscf)	3.87E-04	4.40E-04	6.15E-04	**4.81E-04**
SO2 Concentration (ppmv)	2323.7	2646.5	3695.1	**2888**
SO2 Emissions (lbs/hr)	1212.1	1375.4	1692.2	**1427**

Testing conducted by CUBIX CORPORATION, Austin, Texas