Note: This is a reference cited in *AP 42, Compilation of Air Pollutant Emission Factors, Volume I Stationary Point and Area Sources.* AP42 is located on the EPA web site at www.epa.gov/ttn/chief/ap42/

The file name refers to the reference number, the AP42 chapter and section. The file name "ref02_c01s02.pdf" would mean the reference is from AP42 chapter 1 section 2. The reference may be from a previous version of the section and no longer cited. The primary source should always be checked.

NITRIC ACID
AP-42 Section 5.9
Reference Number
2
8.9
BR Ch.4 #17

ATMOSPHERIC EMISSIONS FROM NITRIC ACID MANUFACTURING PROCESSES

by

Richard W. Gerstle
Division of Air Pollution
Public Health Service
U. S. Department of Health, Education & Welfare
Robert A. Taft Sanitary Engineering Center
Cincinnati, Ohio

and

Ralph F. Peterson
Explosives Department
E. I. duPont deNemours and Company
Wilmington, Delaware

For Presentation at the American Institute of Chemical Engineers, Detroit, Michigan, December 8, 1966

ATMOSPHERIC EMISSIONS FROM NITRIC ACID MANUFACTURING PROCESSES

by

Richard W. Gerstle

and

Ralph F. Peterson

INTRODUCTION

Information on atmospheric emissions from many chemical manufacturing processes is incomplete. Therefore, the Manufacturing Chemists' Association and the Public Health Service are jointly conducting studies to provide information in this area. The first of these studies covered emissions from sulfuric acid manufacturing processes.(1) This paper is concerned with atmospheric emissions from nitric acid manufacturing processes and is taken largely from the original MCA-PHS report on this subject.(2)

Production of nitric acid in the United States has increased sharply in the past 5 years to an annual rate of approximately 5,000,000 tons.(3) About 80 percent of this acid is consumed as an intermediate in the manufacture of ammonium nitrate, which in turn is used in fertilizers and explosives. This rapid growth is expected to continue for several more years, and the atmospheric emissions from this process are thus becoming an increasingly more significant part of the overall air pollution problem.

SUMMARY

Since about 1930 most of the nitric acid made commercially in the United States has been produced by the ammonia oxidation process. Although various types of plants have been constructed for carrying out this synthesis process, the basic chemistry is the same in all cases. Briefly, it involves high-temperature oxidation of ammonia with air over a platinum-rhodium

catalyst to form nitric oxide, followed by oxidation of the nitric oxide to nitrogen dioxide and absorption in water to produce an aqueous solution of nitric acid. The nitrogen which enters the system in the air supplied to the process, and small amounts of unreacted oxygen and nitrogen oxides (NO and NO_2) are discharged from the absorber to the atmosphere. This represents the main source of atmospheric emission from present-day nitric acid plants.

The total concentration of nitrogen oxides normally present in this effluent gas stream ranges from 0.1 to 0.6 percent by volume, with an average of 0.3 percent prior to any treatment of the effluent gas. Trace amounts of acid mist and/or vapor may also be present. Nitric oxide is a colorless gas, but nitrogen dioxide has a characteristic reddish-brown color that is in evidence at most nitric acid plants. The composition of this exit gas, particularly its nitrogen oxides content, depends upon the exact manufacturing process employed and especially on the plant operating conditions.

Atmospheric emissions from nitric acid plants depend on plant operating conditions, production rates, and the use of control devices. Data show that plants operating within design capacities and producing 55-60 percent nitric acid can limit the nitrogen oxides concentration to 0.3 percent in the stream leaving the absorption tower. On this basis, a plant producing 300 tons nitric acid (100% basis) per day will emit approximately 600 pounds of nitrogen oxides per hour. Installation of scrubbers or catalytic reduction equipment can reduce these emissions by 50 to 99 percent.

Nitric acid concentrators emit about 10 pounds of nitrogen oxides per 1000 pounds of strong acid produced.

Emissions during startup or shutdown are usually not a problem.

NITRIC ACID MANUFACTURE

Process Chemistry

All nitric acid in the United States is now produced by the ammonia oxidation process, in which anhydrous ammonia and hot air are mixed and passed through a pad of platinum-rhodium wire mesh catalyst at high temperatures.

The resulting nitric oxide stream is cooled, and the NO reacts with oxygen to form an equilibrium mixture of NO_2 and N_2O_4. This mixture is cooled further and absorbed in water to form an aqueous solution of 55-60 percent HNO_3. The reaction between NO_2 plus H_2O releases additional NO, which must be reoxidized to NO_2 before it can be absorbed.

The chemical reactions may be summarized as follows:

$$4NH_3 + 5O_2 \longrightarrow 4\ NO + 6\ H_2O \qquad (1)$$

$$2NO + O_2 \longrightarrow 2NO_2 \rightleftharpoons N_2O_4 \qquad (2)$$

$$3\ NO_2 + H_2O \longrightarrow HNO_3 + NO \qquad (3)$$

Description of the Pressure Process[4]

More than 90 percent of all nitric acid produced in the United States is made by the pressure process. In this method, the oxidation of ammonia and the absorption of the resulting nitrogen oxides are both carried out at a pressure of 80-120 psig. A typical arrangement of this process is shown in Figure 1.

Oxidation of ammonia to nitric oxide is accomplished by passing a preheated mixture of 90 percent air - 10 percent ammonia, by volume, through a catalytic reactor at a pressure of approximately 110 psig and a temperature of 1700°F. The catalyst consists of layers of fine wire 80-mesh gauzes, of

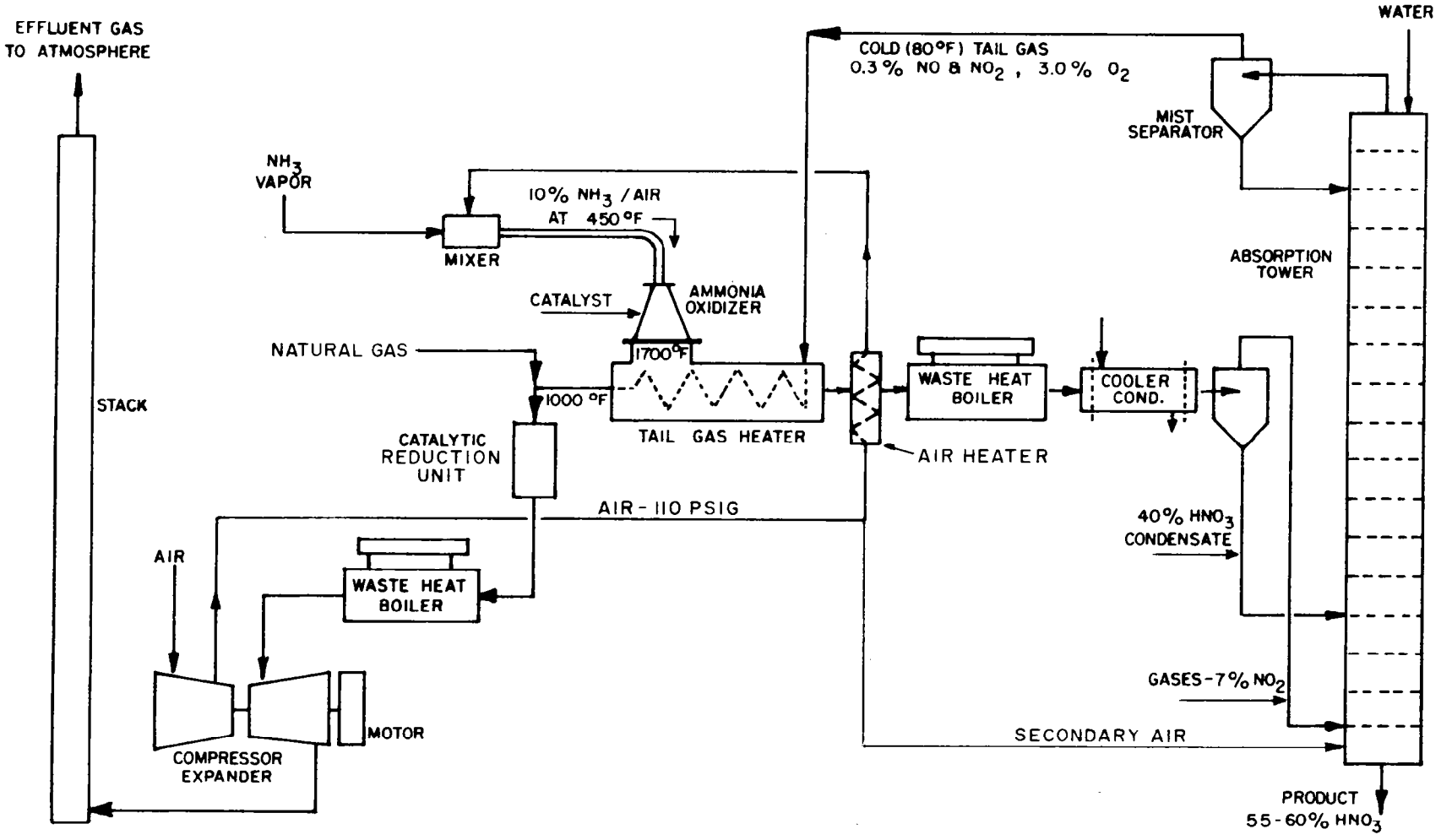

Figure 1. Nitric acid plant utilizing the ammonia oxidation pressure process.

approximately 90 percent platinum and 10 percent rhodium. Contact time with the catalyst is about one millisecond; conversion of the ammonia to nitric oxide and water is about 95 percent complete at these conditions. The remaining 5 percent is lost through dissociation and side reactions. The resulting mixture of nitric oxide, oxygen, nitrogen, and water vapor is passed through various arrangements of heat exchangers to the absorption tower.

Oxidation of nitric oxide to nitrogen dioxide is a continuing process once the gas leaves the converter. Oxidation is however favored by low temperatures, and not until the gas enters the cooler-condenser is there any significant formation of nitrogen dioxide. As the gas stream cools, water condenses and reacts with the newly formed nitrogen dioxide to produce weak nitric acid.

The gas stream leaving the cooler-condenser at a temperature of about 100°F is passed through a cyclone condensate separator before entering the base of the absorber at a pressure of about 100 psig. Condensate, which is 40-50 percent nitric acid, enters the column at an intermediate point. The absorption tower contains bubble cap plates to provide intimate contact between the downward passing aqueous solution and the rising gas stream. Because absorption of nitrogen dioxide in this solution is a highly exothermic process, the tower is provided with internal cooling coils to remove the heat of reaction. Pure process water (often steam condensate) enters the top of the column, and secondary air enters the bottom of the column to provide oxygen for the continuing conversion of nitric oxide to nitrogen dioxide in the absorber.

Unabsorbed gas, containing approximately 0.3 percent nitrogen oxides, 3 percent oxygen, and the balance nitrogen, leaves the absorption tower at a

temperature of about 85°F and a pressure of about 90 psig. The tail gas is then passed through an entrainment separator and is heated by heat exchange with the hot inlet process gases. The energy contained in the resultant hot gas is recovered in a centrifugal expander, which drives the inlet air compressor. The gas leaving the expander is then discharged to the atmosphere. The reheated tail gas may be passed through a catalytic reduction unit before entering the centrifugal expander, as described in the section on abatement.

Although a number of variations of the ammonia oxidation process are used, they represent a minor portion of the total nitric acid production. Nitric acid may be produced at pressures as low as atmospheric pressure with appropriate changes in equipment size and absorption efficiency decreases, and the oxidation of nitric oxide to nitrogen dioxide slows down.

Acid Concentration Processes

Most of the 55-60 percent nitric acid produced by the ammonia oxidation process is consumed at this strength. There remains, however, a fairly substantial requirement for high strength (95-99 percent) nitric acid, which is obtained by concentrating the 55-60 percent NHO_3.

The nitric acid/water system forms a maximum boiling azeotrope at a concentration of 68.4 percent HNO_3 at atmospheric pressure; consequently, nitric acid cannot be concentrated beyond this strength by simple fractional distillation. The distillation must therefore be performed in the presence of a dehydrating agent. Concentrated sulfuric acid is most commonly used for this purpose, although 70-75 percent magnesium nitrate is also used to a limited extent.

Figure 2 is a simplified diagram of a typical nitric acid concentration unit. As shown, the process consists of feeding strong sulfuric acid

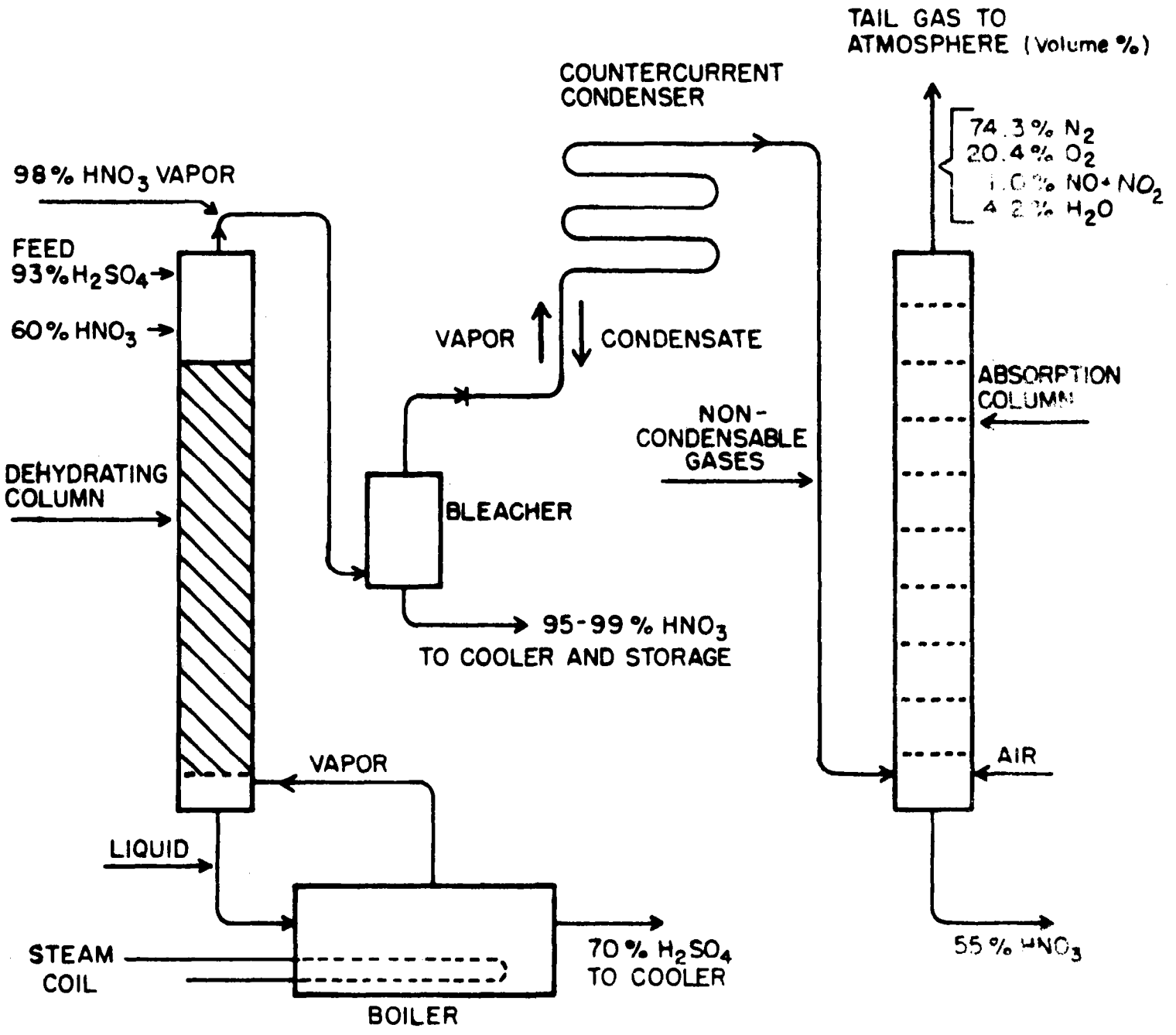

Figure 2. Nitric acid concentrating unit

and 60 percent nitric acid to the top of a packed dehydrating column where it flows downward countercurrent to ascending vapors. Concentrated nitric acid leaves the top of the column as 98 percent vapor containing a small amount of NO_2 and O_2 resulting from dissociation of nitric acid. The vapors pass to a bleacher and countercurrent condenser system to effect condensation of strong nitric acid and separation of the oxygen and nitrogen oxides. These cooled non-condensable gases flow to an absorption column for recovery of the nitrogen oxides as weak nitric acid. Auxiliary air is added to the bottom of the column, and inert gases and unreacted nitrogen oxides are vented to the atmosphere from the top of the column.

Abatement Methods and Equipment

A number of methods are presently available for reducing nitrogen oxide emissions to the atmosphere. These methods include catalytic reduction with certain fuels, absorption, adsorption, and flaring. Catalytic reduction is by far the most widely used method of abatement.

Catalytic Reduction Systems[5,6]

Catalytic reduction is particularly suited to the pressure process for the manufacture of nitric acid in which the absorption tower tail gas is of uniform composition and flow, is under pressure, and can be reheated by heat exchange to the necessary reduction-system inlet temperature. Efficiencies above 90 percent are possible, and in addition a significant economic return can be realized through recovery of heat generated in the catalytic recovery unit.

In operation the tail gases from the absorber are heated to the necessary ignition temperature, mixed with a fuel such as hydrogen or methane (natural gas), and passed into the reactor and through a bed of

catalyst. There a number of reactions take place resulting in the dissociation and decomposition of nitrogen oxides:

$$CH_4 + 2\ O_2 \longrightarrow CO_2 + 2\ H_2O \qquad (4)$$

$$CH_4 + 4\ NO_2 \longrightarrow 4\ NO + CO_2 + 2\ H_2O \qquad (5)$$

$$CH_4 + 4\ NO \longrightarrow 2\ N_2 + CO_2 + 2\ H_2O \qquad (6)$$

Reactions (4) and (5) proceed rapidly, with the evolution of considerable heat. Since the nitrogen dioxide is converted to nitric oxide in reaction (5), the gas is now colorless even though there is yet no substantial destruction of nitric oxide. The reaction of further amounts of natural gas with the nitric oxide in accordance with reaction (6), which takes place more slowly, results in the reduction of nitric oxide to nitrogen. When this reaction is complete, total abatement is achieved.

A typical catalytic reduction unit is shown in Figure 3. Temperatures and compositions are shown only for illustrative purposes, since in practice actual operating conditions are governed by the kind of fuel employed, the gas composition, and the type of catalyst. Usually the catalyst consists of 0.5 percent platinum or palladium on a support such as woven Nichrome ribbon or ceramic material having a pelleted or honeycomb structure.

In a single-stage reduction unit, increasing the amount of fuel raises the temperature of the gas as reactions (4) and (5) take place. Generally, the upper temperature limit of the catalyst and reactor vessel of about 1500°F is reached before all of the oxygen has reacted with the fuel. This is especially true when natural gas is used since a higher inlet temperature is then required. Under these conditions, the effluent is usually a colorless gas in which nitrogen oxides are largely present only as nitric oxide.

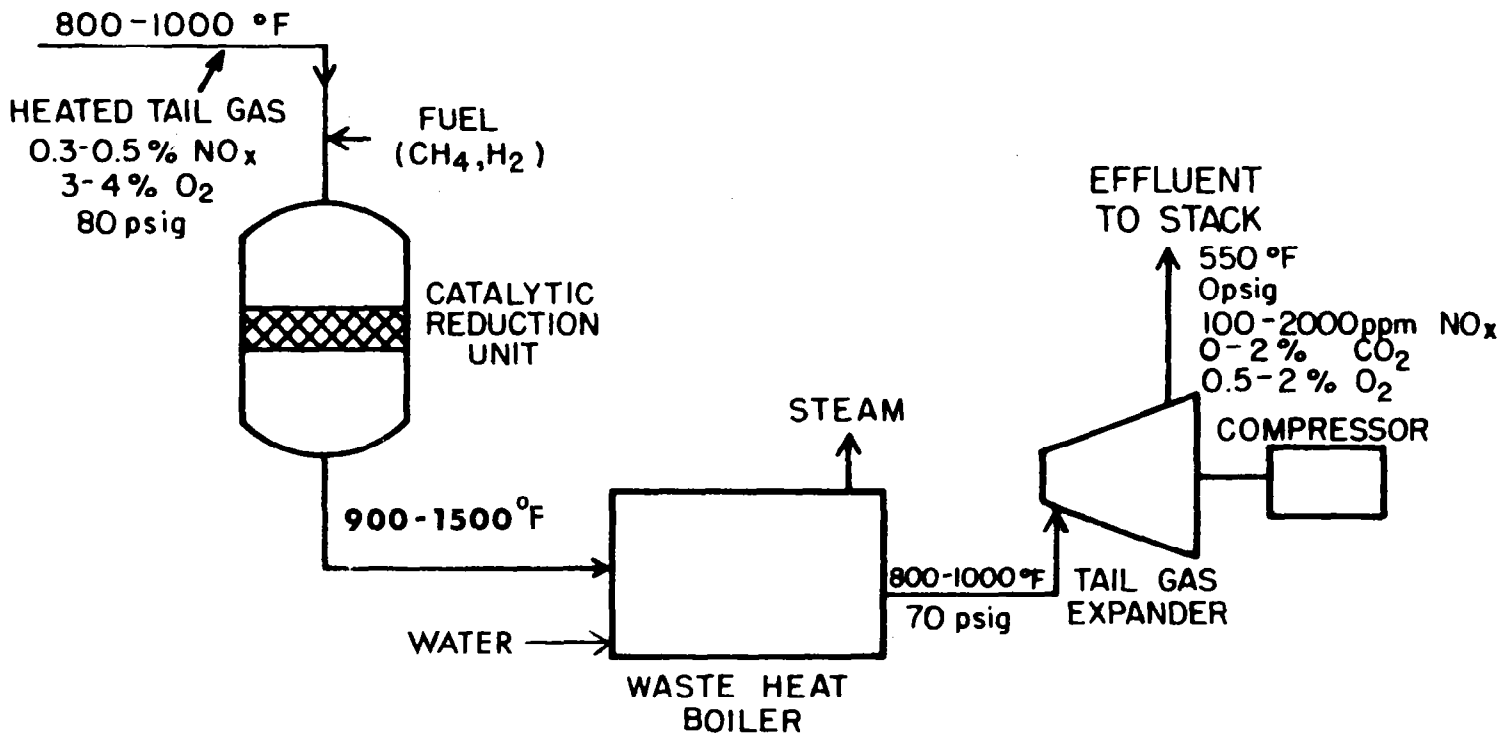

Figure 3. Typical nitric acid plant tail gas catalytic reduction unit.

When hydrogen or carbon monoxide is used as the reducing fuel, the inlet temperature may be as low as 285°F, whereas with methane the minimum ignition temperature is approximately 800°F. Thus, a greater amount of oxygen may be removed in a single stage when hydrogen is used, and the subsequent reduction of NO may then take place according to reaction (6) before the limiting temperature of 1500°F is reached.

In most instances natural gas is the most economical fuel. Where temperature limits the extent of reaction in a single-stage reduction unit the tail gas stream can be treated in two catalytic reactor stages, with intermediate cooling. By this method, operation can be carried out with excess fuel; the reduction of total nitrogen oxides to less than 0.01 percent has been reported.[7] It is technically possible to carry out essentially full reduction and decomposition of the nitrogen oxides (down to 0.01 or 0.02 percent) in a single stage with natural gas as fuel if the oxygen content of the absorber tail gas is kept below the usual 3 percent and the heat of reaction is thereby reduced. Under these conditions, however, there will be some loss in absorption efficiency, with a consequent operating cost penalty.

Performance of existing catalytic units varies widely and depends on the method of operation. The operator of one plant may desire maximum reduction of the nitrogen oxides; another, a colorless plume; and a third, maximum heat generation. These variations are obtained by changes in the amount and type of fuel, amount of catalyst, oxygen content of the tail gas, operating temperatures, and reaction time. The basic equipment design is also a governing factor. A colorless effluent is usually accepted as an indication of proper functioning, but it does not necessarily indicate a reduction in total nitrogen oxides since nitric oxide may still be present.

The cost of a catalytic reduction unit varies from $1 to $2 per scfm of tail gas, excluding auxiliary equipment such as waste heat boilers and controls. However, a considerable financial payback may be gained from one of these units. The heat generated in the catalytic reduction unit may be recovered in a waste heat boiler and the steam thus generated used in another nearby process or in a steam turbine to help drive the inlet air compressor. The waste gas stream is then passed to a power recovery gas expander, which is coupled to the inlet air compressor. In this manner, up to 100 percent of the power required may be supplied by energy contained in the waste gas stream.

Other Methods of Control

Absorption towers with water as the absorbing medium are useful when nitrogen dioxide emissions are in excess of 2 percent. Since emissions from nitric acid plants average approximately 0.3 percent and represent the effluent from an aqueous absorption system, water absorbers in such plants are not too useful.

Absorption in alkaline solutions such as sodium carbonate or sodium hydroxide is more effective than in water. Disposal of the resulting nitrate salt solution may be a problem.

Adsorption of nitrogen oxides on silica gel or commercial zeolites is possible, but these systems are not now used on a commercial scale.

Flaring of higher concentrations of nitrogen oxides has found application on a commercial scale when there is an intermittant discharge of these gases. The extent of nitrogen oxide reduction to nitrogen is influenced by the kind of burner or flare, the type of fuel, and the initial concentration of NO_x in the waste gas. The performance to be realized for any given set of conditions must be determined experimentally.

EMISSIONS FROM NITRIC ACID MANUFACTURE

Atmospheric emissions from the manufacture of nitric acid occur from the release of unabsorbed oxides of nitrogen in the tail gases from the absorption tower. These oxides are largely in the form of nitric oxide and nitrogen dioxide. The intensity of the reddish-brown color of the gas depends on the concentration of nitrogen dioxide present.

Table 1 presents emission and operating data from 12 nitric acid plants of various sizes that use no equipment for treatment of tail gas. Emissions range from 0.1 to 0.69 volume percent nitrogen oxides, with an average of 0.37. Limited data indicate that nitrogen dioxide accounts for approximately 1/3 to 1/2 of these values.

The plants listed in Table 1 are of similar design, operated at pressures of 72-90 psig and temperatures of about 90°F at the absorber outlet. All plants produced acid in the 55 to 60 percent range. In Plant 2 and probably Plant 8, leaks in the tail-gas reheater account for the high emission values. Emission values for Plants 11 and 12 indicate that a decrease of 40 to 60 percent in oxygen tends to raise the nitrogen oxide content of the tail gas by about 30 to 50 percent as compared to values for Plant 10. The very low nitrogen oxides content of the tail gas in Plant 3 is due partly to the lower absorption-tower temperature.

Table 2 presents emission and operating data from plants equipped with catalytic tail gas combustion equipment for the reduction of nitrogen oxides.

Hydrogen, natural gas, or a mixture of the two are used as fuels. The data show the composition of the tail gas leaving the absorber and of the effluent leaving the catalytic reduction unit. Catalytic waste gas treatment reduced the total nitrogen oxides emission by 36 to 99.8 percent.

Plant Number	1	2	3	4	5	6	7	8	9	10	11[e]	12[e]
Nominal Output Rate, tons/day (100% acid basis)	55	55	60	120	120	120	120	180	200	265	700	750
Normal Acid Strength, %	60	60	57.5	57	57	57	57	55	57.5	56	55.7	55
Percent of Operating Capacity	88	72	100	100	100	100	100	100	100	100	100	100
Ammonia Feed Rate, lbs/hr			1454	2750	2750	2750	2750	4000	4740	6670	17,500	18,750
Ammonia Oxidation Pressure, psig	100	100	100	100	100	100	100	100	105	115	120	120
Absorption Column Exit Pressure, psig	72	75	88	90	90	90	90	80	85	89	90	80
Absorption Column Exit Temp, °F	96	95	80	90	90	90	90	95	90	100		90
Stack Gas Rate, Mscfm[a]	3.5	3.4	5.3	10.5	10.5	10.0	10.0	15.5	16.5	21.8	59	57.6
Total Nitrogen Oxides in Stack Gas, Vol %[b]	0.24	0.69[d]	0.1	0.31	0.34	0.34	0.35	0.60	0.28	0.30	0.45	0.40
Nitrogen Dioxide in Stack Gas, Vol %	0.13	0.19										
Oxygen in Stack Gas, Vol %	4.1	4.5	3.0	3.0	3.0	3.0	3.0	4.0	3.0	4.0	1.5	2.5
Total Nitrogen Oxide Emitted, tons/day[c]	0.8	2.2	0.5	3.0	3.3	3.1	3.2	8.6	4.3	6.0	24.5	21.3
Pounds of Nitrogen Oxides Emitted per ton of acid produced (100% basis)[c]	33	110	17	50	55	52	53	96	43	45	70	57
Plume Opacity	med.	heavy	light	med.	med.	med.	med.	med.		med.		
Plume Color	light brown	dark brown	light orange	light brown	light brown	light brown	light brown	yellow		light orange	light brown	brown yellow

a) All volumes corrected to 32°F and 29.9 in. Hg.
b) Does not include N_2O.
c) Calculated on the basis that all the nitrogen oxides are nitrogen dioxide.
d) Suspected tail gas reheater leak.
e) More than one unit.

TABLE I

EMISSION AND OPERATING DATA FOR NITRIC ACID PLANTS WITHOUT WASTE GAS TREATMENT EQUIPMENT

Type of fuel[a]		NG	H_2	NG	H_2	NG	75% H_2 25% NG	H_2	75% H_2 25% NG	NG	NG	NG
Plant number		13	14	15	16	17	18	19	20	21	22	23
Rated capacity, tons/day (100% acid basis)		110	120	140	150	170	185	220	230	280	340	350
Normal acid strength, %		51	60	57	56	53	57	58	57	57	57	57
Percent of rated capacity		127	100	100	100	106	100	95	119	110	100	100
Ammonia feed rate, lb/hr		3346	2880	3500	3675	4100	4471	6150	6700	6800	8600	8460
Ammonia oxidation pressure, psig		105	120	110	105	20	102	105	115	132	98	108
Absorption column exit pressure, psig		70	94	90	80	23	79	82	80	100		92
Absorption column exit temp., °F		85	78	100	90		83	86	98	65		104
Tail gas rate, Mscfm[4]		10.9	9.3	11.3	11.7	13.7	14.5	20	20.5	21.2	27.1	28.6
Gas temperature and compositions before treatment equipment, vol. %	Temperature, °F	840	375		502	250	660		570			
	Oxygen	3.5	2.4	1.5	2.2	3.0	2.5	2.7	1.6	2.1	1.9	3.0
	Total nitrogen oxides[c]	0.21	0.10	0.50	0.3	0.22	0.3	0.30	0.54	0.36	0.54	0.2
	Nitrogen dioxide										0.26	
Gas temperature and compositions after treatment equipment, vol. %	Temperature, °F	1250	915	1500	1120	900	1190		930			1250
	Oxygen		None	None	None	1.9	None	0.5	None	0.9	1.7	1.73
	Total nitrogen oxides	0.04	<0.0002	0.015	0.01	0.14	0.005	0.1	0.008	0.04	0.21	0.044
	Nitrogen dioxide										0.02	
	Carbon dioxide		None	1.0	Nil	0.88		Nil		0.67	0.6	0.74
Percent reduction in nitrogen oxides		81	99.8	97	97	36	98	67	98.5	89	61	78
Total nitrogen oxides emitted, tons/day[d]		0.40	Nil	0.15	0.11	1.8	0.07	1.85	0.15	0.78	5.25	1.16
Pounds of nitrogen oxides emitted[d] per ton of acid produced (100% basis)		5.7	Nil	2.2	1.5	19.6	0.75	17.6	1.1	5.1	30.9	6.6
Plume opacity		Clear	Clear	Clear	Clear	Clear	Clear		Clear	Clear	Clear	Clear
Plume color		None	None	None	None	None	None		None	None	None	None

[a] H_2 = hydrogen; NG = natural gas.
[b] All volumes corrected to 32°F and 29.9 in. Hg.
[c] Does not include N_2O.
[d] Calculated on the basis that all nitrogen oxides are NO_2.

TABLE 2

EMISSION AND OPERATING DATA FOR NITRIC ACID PLANTS USING CATALYTIC WASTE GAS TREATMENT EQUIPMENT

In all cases the stack effluent was clear and colorless, an indication of essentially complete reduction of nitrogen dioxide to nitric oxide.

Only at Plant 22 was gas composition data available to show both total nitrogen oxides ($NO + NO_2$) and nitrogen dioxide. At this plant the catalytic reactor reduced the nitrogen dioxide content of the absorber tail gas by 92 percent and reduced the total nitrogen oxides content by 60 percent.

Alkaline scrubbers also reduce the emission of nitrogen oxides. A two-stage sodium hydroxide-water scrubber was found to reduce the overall nitrogen oxides content by about 90 percent. Scrubbing with sodium carbonate solutions is also used to reduce these emissions.

Figure 4 shows the mass emission rates of nitrogen oxides for various sized plants and for various tail gas concentrations.

Small quantities of acid mist usually are also present in the gases from the absorption tower. This mist is vaporized when the gas is reheated and usually enters the atmosphere as a gas. In a plant that is operating normally, the discharge of acid vapor is relatively insignificant.

Nitrogen oxides are also discharged from nitric acid concentrators. The data in Table 3 summarize the emissions from a unit in which sulfuric acid was the dehydrating agent. The loss to the atmosphere was equivalent to 0.7 percent of the strong nitric acid produced.

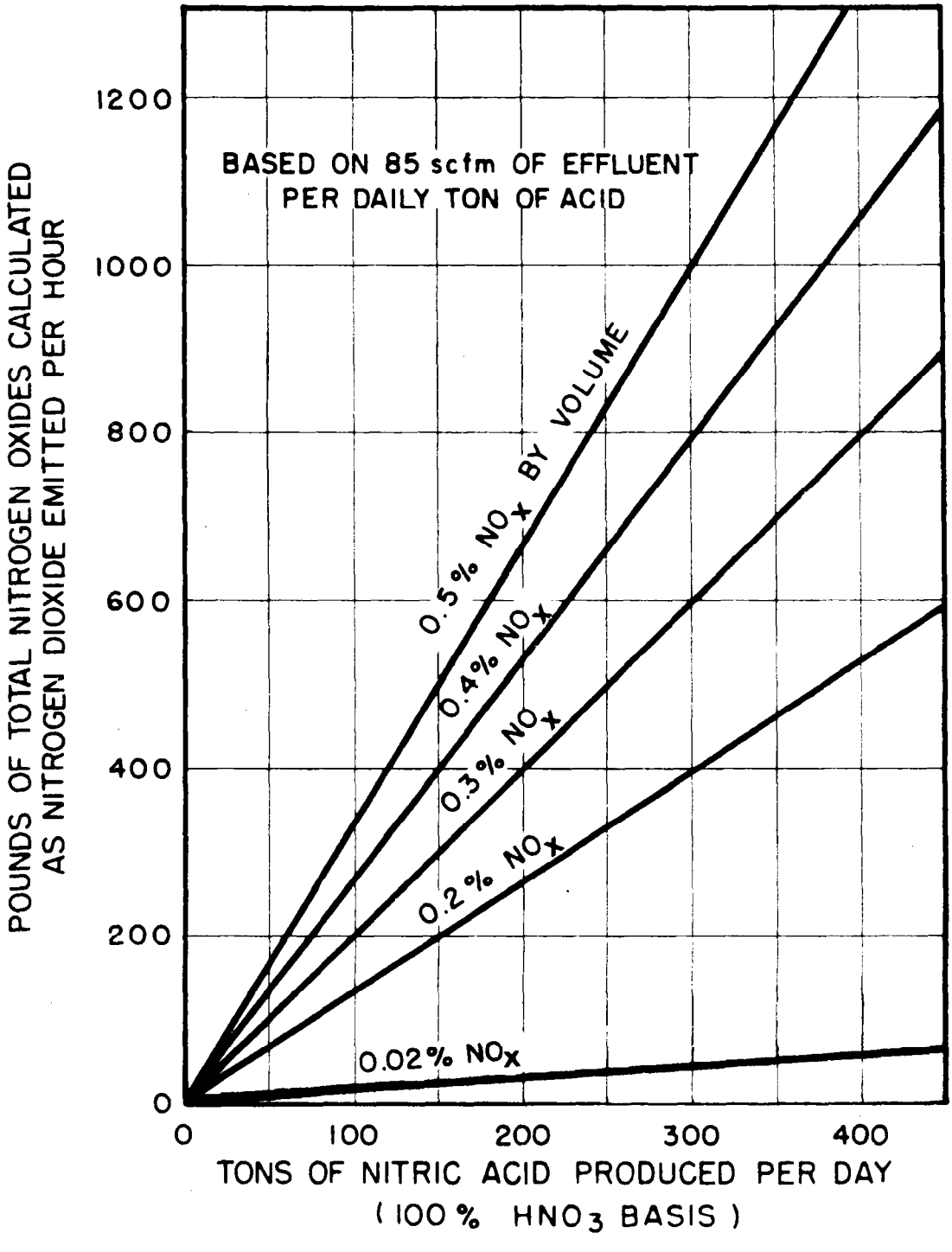

Figure 4 Pounds of total nitrogen oxides calculated as nitrogen dioxide emitted per hour vs daily production of nitric acid.

TABLE 3

Atmospheric Emissions from a 3000 pound/hr (100% basis) Nitric Acid Concentrator

Component	Composition, volume %	Flow Rate, lb/hr	Emissions, lb per 1000 lb of HNO_3 produced
N_2	74.4	630	210
O_2	20.4	196	65
NO_2	1.0	15	5
H_2O	4.2	30	10
TOTAL	100	871	290

Plant Operating Variables

Emissions of nitrogen oxides may vary widely with plant operation and with equipment. The main plant-operating variables that affect tail gas concentrations adversely are insufficient air supply to the system, low pressure in the system especially in the absorber, high temperatures in the cooler-condenser and absorber, the production of an excessively high-strength product acid, and operation at high throughput rates. Faulty equipment includes such items as improperly operating compressors and pumps, and heat exchangers in which leaks between rich and lean nitrogen oxide gas streams may occur.

Insufficient air supply may be due to poor compressor design, malfunctioning of the compressor and power recovery equipment, or leaks in the air supply system. Oxygen is usually supplied to the system by the air compressor, which provides air for the oxidation of ammonia and also for the reaction to form nitric acid in the absorption tower. Lack of oxygen in the system will hinder the oxidation of nitric oxide to nitrogen dioxide and thus decrease absorption efficiency.

Recent plant design improvements include injecting a portion of the air into the cooler-condenser to increase oxidation of nitrogen oxides at this point. Tower volume and number of plates have an important bearing on plant efficiency.

Pressure in the absorber is fixed by basic design of the unit, by compressor capacity, and by the pressure drop in the lines leading to the absorber. The rate of oxidation of nitric oxide to nitrogen dioxide increases as the square of the pressure, and a small increase in absorber pressure provides a substantial increase in oxidation and absorption rates.

High temperatures also cause a decrease in absorption efficiency. The rate of oxidation of nitric oxide and the rate of absorption of nitrogen dioxide in water vary inversely with the temperature and are favored by low temperatures. Absorber temperature is largely a function of entering gas temperature, ambient air temperature, and temperature and flow of the cooling water that is circulated through coils on each plate. Throughput of the cooling water is dictated by pump design, and its temperature is fixed by the source of the water supply. Temperatures of the tail gas leaving the absorber usually range from 70 to 90°F.

SUMMARY OF SAMPLING AND ANALYTICAL TECHNIQUES

In nitric acid plants the nitrogen oxides content of the effluent gas streams is usually measured to determine plant operating efficiency. In addition, oxygen concentrations are measured to check air rates to the unit.

Total Nitrogen Oxides Determination

The hydrogen peroxide test is most commonly used in nitric acid plants to determine total nitrogen oxides. This method measures all of

the various oxides of nitrogen except nitrous oxide (N_2O). Nitric acid mist and vapor are also measured. Although many variations are used, this technique basically involves collecting a known volume of gas in a 2-liter glass container charged with 25 cc of 3 percent hydrogen peroxide solution. The container is sealed and the contents allowed to react for 30 to 60 minutes with frequent shaking of the container. The contents are then titrated to a copper-colored endpoint with standard sodium hydroxide and methyl-red indicator.

The hydrogen peroxide method does not give reliable results if any other acidic or basic gases are present. The phenoldisulfonic acid method[8] may be used in such cases to determine total nitrogen oxides. This method is more tedious, but is not subject to interference by any other gases. Photoelectric instruments may also be used to determine nitrogen oxides concentrations.

Oxygen Determination

A standard Orsat kit is usually used to determine the oxygen content of the tail gases. When the kit is used carefully, oxygen concentrations may be read to the nearest 0.2 percent by volume.

Nitrogen Dioxide Determination

Nitrogen dioxide is not usually measured as a separate compound but is instead included in the total nitrogen oxides determination. The measurement of nitrogen dioxide is complicated by the presence of nitric oxide, which is being constantly converted to nitrogen dioxide in the presence of oxygen. Determination of nitrogen dioxide is of interest from an air pollution standpoint because of its photochemical reactions, and from a plant operating standpoint because it determines the oxidation state of the tail gases.

The Griess-Saltzman procedure may be used to specifically measure nitrogen dioxide.[9] The accuracy of this method is limited at higher concentrations, and instrumental procedures are probably more accurate.

REFERENCES

1. Atmospheric Emissions from Sulfuric Acid Manufacturing Processes, Public Health Service Publication No. 999-AP-13, 1965.

2. Atmospheric Emissions from Nitric Acid Manufacturing Processes, Public Health Service Publication No. 999-AP-27, 1966.

3. Bureau of the Census. U. S. Department of Commerce, Statistical Abstracts of the U. S., Section on Chemical Products.

4. Chilton, T. H., The Manufacture of Nitric Acid by the Oxidation of Ammonia, Chemical Engineering Progress Monograph Series No. 3., Vol. 56, A.I.ChE., 1960.

5. Donahue, J. L., System Design for the Catalytic Decomposition of Nitrogen Oxides, J. Air Pollution Control Association, 8:209-212, Nov., 1958.

6. Anon., Where Tail Gas Oxidation Stands Today, Chem. Eng. 66:66-68, January 12, 1959.

7. Anderson, H. C., et.al., Catalytic Treatment of Nitric Acid Plant Tail Gas, I. & E.C., 53:199-204, Mar., 1961.

8. ASTM Standards, Part 23, Method D 1608, 1965.

9. Saltzman, B. E., Anal. Chem. 26:1949, 1954.