Note: This is a reference cited in *AP 42, Compilation of Air Pollutant Emission Factors, Volume I Stationary Point and Area Sources.* AP42 is located on the EPA web site at www.epa.gov/ttn/chief/ap42/

The file name refers to the reference number, the AP42 chapter and section. The file name "ref02_c01s02.pdf" would mean the reference is from AP42 chapter 1 section 2. The reference may be from a previous version of the section and no longer cited. The primary source should always be checked.

NITRIC ACID
AP-42 Section 5.9
Reference Number
1

S8.8 BR CH.4 # 16

FOR TECHNICAL REVIEW ONLY
NOT FOR PUBLICATION

CONTROL OF AIR POLLUTION

FROM

NITRIC ACID PLANTS

ROUGH DRAFT

FOR TECHNICAL REVIEW ONLY NOT FOR PUBLICATION

ENVIRONMENTAL PROTECTION AGENCY

Durham, North Carolina

August 1971

TABLE OF CONTENTS

	Page
LIST OF FIGURES	iv
LIST OF TABLES	iv
INTRODUCTION	vi
SUMMARY	viii
1.0 PROCESS DESCRIPTION	1
1.1 Pressure Process	1
1.2 Subsidary Processes	3
1.3 Recovery of Power	4
1.4 High Strength Acid Production	5
2.0 EMISSIONS	7
2.1 Nitrogen Oxides	7
2.2 Acid Mist	8
2.3 Visible Emissions	9
2.4 Reducing Compounds	9
3.0 CONTROL TECHNOLOGY	12
3.1 Plant Design and Operation	12
3.2 Catalytic Combustion	14
3.3 Molecular Sieves	20
4.0 INSTRUMENTATION	25
5.0 CONTROL COSTS	27
5.1 Capital Investment	27
5.2 Financial Impact	29
5.3 Income Effects	36

6.0 RETROFITTING EXISTING NITRIC ACID PLANTS 39

7.0 REFERENCES 41

7.1 Cited References 41

7.2 General References 42

LIST OF FIGURES

Figure Page

1 Flow diagram of a typical nitric acid plant using the pressure process 2

2 Typical catalytic combustion unit 14

3 NO_x emission test data from nitric acid plants 19

4 Simplified process flow sheet: three - bed molecular sieve recovery system 22

5 Average size of new production units added by the nitric acid industry: 1960-1975 28

6 Schematic of total fertilizer manufacturing plant 30

LIST OF TABLES

Table Page

1 Typical ranges of nitric acid plant tail gas composition, temperature and pressure 8

2 Emissions of carbon monoxide and nitrogen oxides from nitric acid plants 10

3. Production costs for a 300 tpd nitric acid plant 31

4 Production costs for a 380 tpd ammonium nitrate plant 33

5 Control cost for a 300 tpd nitric acid plant using a single-stage reduction unit 34

6 Control cost for a 300 tpd nitric acid plant using a dual-stage combustor 35

7 Model system income statements 38

INTRODUCTION

This document has been prepared to provide guidance to owners and operators of nitric acid production facilities and to State and local control agencies who will implement the standards of performance for new acid plants. The standards were promulgated by the Administrator, Environmental Protection Agency, on November 15, 1971, and published in the Federal Register on the same date. The Administrator is authorized to develop and promulgate standards of performance for new stationary sources under Section 111 of the Clean Air Act (42 U.S.C. 1857 et seq) as amended by the Clean Air Amendments of 1970 (Public Law 91-604).

In 1968, an estimated 9,600,000 tons of nitrogen oxides or oxides of nitrogen (NO_x, expressed as NO_2) were emitted from stationary sources. The bulk of this emission resulted from the high temperature fixation of atmospheric nitrogen and oxygen during combustion of coal, oil, and gas, and the combustion of gasoline and diesel fuel in stationary internal combustion engines. The manufacture of nitric acid generated approximately 150,000 tons of NO_x in 1968 or about 1.6 percent of the total NO_x emitted from stationary sources. There were approximately 72 nitric acid manufacturing plants in the United States in 1968 with a total capacity of 7.7 million tons of acid per year.[1]

Though emissions from nitric acid plants do not account for a large fraction of NO_x on a nationwide basis, individual plants can be large point sources. Without control equipment a modern plant producing 500 tons per day (tpd) of nitric acid will release about 1,000 pounds of NO_x per hour at a concentration of 3,000 ppm by volume.[1]

[Approximately 50 percent of this emission will be in the form of nitrogen dioxide, (NO_2), an opaque reddish-brown gas, the rest as colorless nitric oxide (NO).] Most new plants utilize catalytic devices to decrease operating costs and to reduce NO_x emissions.[The majority of these devices do not optimize NO_x decomposition to nitrogen and oxygen but convert visible NO_2 to colorless NO.[1]]

For nitric acid manufacturing facilities and for all other categories of stationary sources for which performance standards are promulgated, either the Administrator, Environmental Protection Agency, or the responsible State will provide preconstruction review. Where the State has been delegated authorization to implement and enforce the standards of performance promulgated under Section 111 of the Act, the Administrator will not provide preconstruction review. For sources to be located in States which have not been so delegated this authority, the Administrator will provide preconstruction review if requested by the owner or operator.

SUMMARY

[Nitric acid production facilities can discharge oxides of nitrogen--principally nitrogen oxide and nitrogen dioxide--as well as acid mist and reducing compounds such as carbon monoxide.] At this time, standards of performance are being established only for total oxides of nitrogen and for attendant visible emissions which are a function of the nitrogen dioxide concentration.[For the purpose of the standards, all oxides of nitrogen (NO_x) shall be measured and reported as nitrogen dioxide (NO_2).] The standards do not include any "non-criteria pollutants" as defined by Section 111(d) of the Act; therefore, they do not require the establishment of State emission standards for existing sources pursuant to that Section.

{The standards are:

(a) 3.0 pounds of NO_x per ton of acid produced or 1.5 kilogram NO_x per metric ton. Acid produced is expressed in tons of equivalent 100% strong nitric acid. Acid actually produced is

(b) Visible air pollutants shall not be released to the atmosphere.}

[For a typical nitric acid plant where there is no dilution of exit gases, 3.0 pounds of NO_x per ton is equivalent to an undiluted stack gas concentration of 209 parts per million NO_x by volume. If NO_x emissions are held at or below 209 ppm, there will be essentially no visible emissions from the facility.]

These performance standards apply to any nitric acid production facility, the construction or modification of which is commenced after August 17, 1971. Since construction of such facility requires 18 to 24 months, the first plants to be affected by the standard will not be operated until at least 1973.

It has been demonstrated that conventional nitric acid plants can be operated consistently at or below the limits of the standards using catalytic decomposition systems. Pressure, temperature, residence time, and reactant concentrations in the system are controlled such that the bulk of the NO and NO_2 is decomposed to nitrogen and oxygen. The standards are based on actual tests and take into consideration the fact that there are interferences which cause NO_x emissions to be greater during abnormal periods of operation. In fact, a system designed to meet this standard at all times will operate at a considerably lower NO_x level much of the time.

The NO_x standard is based on catalytic decomposition systems using natural gas as fuel. This represents a more severe condition of operation and generally higher discharges of NO_x than is experienced when hydrogen fuels are used in the decomposition system. The use of hydrogen is feasible only when the nitric acid plant is operated in proximity to a hydrogen source. When hydrogen is employed, exhaust gases are generally below 150 ppM NO_x.

At the present time, there are no other methods of controlling NO_x from nitric acid plants that have been adequately demonstrated. A most promising avenue of control appears to be through the use of molecular sieves. Utilizing these devices on a small pilot plant scale, almost

all oxides of nitrogen have been removed from acid plant stack gas such that emissions of 0.2 to 0.7 pounds NO_x per ton of acid (10 to 50 ppm) are released to the atmosphere. The sieves are regenerated with NO_x and dilute nitric acid recycled back to the acid production system.] If molecular sieves are shown to be adaptable to nitric acid production facilities, it is expected that a performance standard of 0.7 pounds of NO_x per ton of acid could be justified. When molecular sieves or other improved NO_x control systems are adequately demonstrated, these standards of performance will be revised to reflect the lower emissions.

While there may be other air pollutants discharged from nitric acid production facilities, it is not deemed appropriate to establish standards for them at this time. [They include nitric acid mist and reduced compounds. Acid mist is a problem only where NO_x is not controlled. When catalytic decomposition systems are applied to nitric acid facilities, it is necessary to control acid mist stringently to prevent catalyst fouling.] This would also be true if molecular sieves were utilized in lieu of catalytic decomposition systems. In order for the sieves to function properly and to prevent sieve damage, it would be necessary to remove essentially all of the acid mist upstream of the molecular sieves.

[Reducing compounds are by-products of the catalytic control systems. Compounds such as carbon monoxide, hydrocarbons, and hydrogen cyanide can be formed in the catalytic unit if reducing conditions are overly severe.]

[In such instances, the NO_x emissions are usually extremely low. While information is lacking in this area, there have been no indications that emissions of reduced compounds are of sufficient magnitude to warrant a standard.] If significant quantities of reduced compounds are found to exist, performance standards may be required. [Should molecular sieves be employed in place of the catalytic systems, no reduced compounds would be expected in the exit gases.]

[The purpose of requiring continuous NO_x monitoring is (1) to provide a record of performance and (2) to provide intelligence to plant operating personnel such that suitable corrections can be made when the system is shown to be out of adjustment.] Operators will be required to maintain the monitoring equipment in calibration and to furnish records of NO_x values to the Administrator of EPA or to the responsible State agency.

New source performance standards for all source categories will be reviewed from time to time. The limits may be revised depending upon new control technology which becomes available and is adequately demonstrated. Revisions could include the addition of limits for further pollutants as well as revisions in the present standards for NO_x and visible emissions.

The costs of catalytic decomposition systems have been considered in setting these performance standards. A detailed discussion is presented later in this document. [For a modern plant of 300 tons per day capacity,

the addition of a two-stage catalytic decomposition system represents eight percent of the costs of the total facility. It raises the operating costs of such a plant by five percent but represents only a one percent increase in the price of the most typical product, ammonium nitrate fertilizer.]

1.0 PROCESS DESCRIPTION

1.1 Pressure Process[1]

The manufacture of almost all nitric acid in the United States is accomplished by the catalytic oxidation of ammonia.

In a typical pressure process,[2] illustrated in Figure 1, air is compressed, preheated and then mixed with preheated anhydrous ammonia gas in a volumetric ratio of approximately 9:1. As the mixture is passed through a wire-mesh catalyst of platinum-rhodium, the ammonia is oxidized at high temperature according to the reaction

$$4\ NH_3 + 5\ O_2 \rightarrow 4\ NO + 6\ H_2O. \qquad (1)$$

This reaction can be effected to within 95 percent to 98 percent completion.

When the temperature of the process stream has been reduced to typically 100°F or less in the cooler condenser, the nitric oxide reacts with residual oxygen in accordance with the reaction

$$2\ NO + O_2 \rightarrow 2\ NO_2 \rightleftharpoons N_2O_4 \qquad (2)$$

to form nitrogen dioxide and its liquid dimer, nitrogen tetroxide. Subsequently, the gas stream is introduced into the lower portion of an absorption tower containing bubble cap plates. Water is introduced into the top of the tower. The exothermic reaction between NO_2 (or N_2O_4) and water,

$$3\ NO_2 + H_2O \rightarrow 2\ HNO_3 + NO, \qquad (3)$$

produces nitric oxide and an aqueous solution of 50 to 60 percent

nitric acid which is removed as the product from the base of the tower. The production of one mole of NO for each two moles of HNO_3 in the last reaction necessitates the introduction of secondary air at the base of the absorption tower to reoxidize the nitric oxide to nitrogen dioxide and thereby perpetuate the absorption reaction. This secondary air also removes NO_2 from the product acid. The oxidation of ammonia and the absorption of nitrogen dioxide to produce nitric acid are performed at approximately 80 to 120 psig in the pressure process.

From the top of the absorption tower, the pressurized spent gas exits at a temperature which is typically less than 100°F and passes through an entrainment separator which removes nitric acid mist. Thermal energy is rejected to the tail gas stream by the hot process gases which exit from the ammonia oxidizer. Energy recovery is accomplished by passing the tail gas through an expander which assists in driving the air compressor. Finally, the exhaust from the expander is discharged to the atmosphere via a stack.

1.2 Subsidiary Processes[1]

Prior to the development of high-strength, acid-resistant materials for pressure vessels, nitric acid was manufactured by carrying out the reactions of the ammonia oxidation process at atmospheric pressure. Low rates of NO oxidation and of NO_2 absorption are characteristic of the process. Although some of these atmospheric-pressure plants are still in existence in the United States, they have been superseded by some form of the more economical pressure process for the manufacture of almost all nitric acid in

the United States.

Variations of the pressure process include the combination-pressure process in which ammonia oxidation is conducted at pressures of from 0 to 30 psig with absorption occurring at 30 to 50 psig. In the intermediate-pressure process, pressures of 20 to 60 psig are provided for both oxidation and absorption reactions.

1.3 Recovery of Power[1]

The power expended in compressing process air represents one of the largest potential operating costs in the manufacture of nitric acid. The tail gas at the exit of the absorber in the pressure process is still at relatively high pressure and temperature. At older plants these tail gases are passed through a reciprocating expander to provide up to 40 percent of the total power required to drive the reciprocating air compressors.

With the arrival of gas expander turbines capable of operation at higher temperatures, it has become practical to further heat the tail gas to about 1600°F by passing the gas through a catalytic reduction unit. Up to 90 percent of the power for air compression can be recovered from the tail gas by this scheme. It is possible to significantly reduce the NO_x content of the spent gas stream with such a reduction unit; however, many catalytic systems now in use are only decolorizers. They reduce NO_2 to NO but have little or no effect on total NO_x.[3]

1.4 High Strength Acid Production

As previously mentioned, the major portion of the weak nitric acid (50-70 percent) produced by the ammonia oxidation process is consumed at this strength in the manufacture of ammonium nitrate. There remains, however, a fairly substantial requirement for high strength (95-99 percent) nitric acid, which is obtained by concentrating the 50-70 percent HNO_3 or by the direct strong acid process.

The nitric acid-water system forms a maximum boiling azeotrope at a concentration of 68.4 percent HNO_3 at atmospheric pressure; consequently, nitric acid can not be concentrated beyond this strength by simple fractional distillation. The distillation must therefore be carried out in the presence of a dehydrating agent. Concentrated sulphuric acid is most commonly used for this purpose. The process consists of feeding strong sulphuric acid and 60 percent nitric acid to the top of a packed dehydrating column, through which it flows downward counter current to ascending vapors. Concentrated nitric acid leaves the top of the column as 98 percent vapor containing a small amount of NO_2 and O_2 resulting from dissociation of nitric acid. The vapors pass to a bleacher and counter current condenser system to effect condensation of strong nitric acid and separation of the oxygen and nitrogen oxides. These cooled noncondensable gases flow to an absorption column for recovery of the nitrogen oxides as weak nitric acid in much the same manner as in the pressure-process nitric acid plants. Auxilliary air is added to the bottom of the column, and inert gases and unreacted nitrogen oxides are

vented to the atmosphere from the top of the column. The entire process operates at approximately atmospheric pressure.]

[In comparison to the NO_x discharged from weak acid plants, emissions from concentrating plants are relatively minor] [Decomposition of nitric acid and leakage of air into the dehydrator permits the noncondensible gases to carry small quantities of NO_2 from the overhead condenser. Flows are so small that a relatively inexpensive yet oversized absorber will recover the NO_2.]

[Available literature references indicate that demonstrated emission control technology in "strong acid" plants is capable of meeting this same standard of 3.0 pounds of NO_x per ton of 100 percent acid--established for weak acid plants.] However, there is only one strong acid process now in operation in the United States. The low NO_x emission levels are accomplished by absorbing the acid stream. No control equipment is required.

2.0 EMISSIONS

2.1 Nitrogen Oxides[1]

Nitrogen oxides (NO_x) emissions consist mainly of NO and NO_2, and are emitted to the atmosphere in the absorber tail gas after it leaves the expander and final heat exchangers. These emissions vary with the plant design, maintenance practices, production rate, and absorber efficiency. Absorber efficiency can be increased by higher pressure and lower temperature. This will result in lower NO_x emissions. Emissions of NO_x from well maintained and properly operated nitric acid plants without catalytic combustion devices average from 2000 to 4000 ppm. However, NO_x emissions as low as 1000 ppm have been reported at many existing plants. Catalytic combustion devices are operated mainly for decolorization and energy recovery. They reduce the NO_2 content of the tail gas to 50 to 200 ppm as evidenced by their colorless exit gas streams. However, the NO content of these streams usually changes proportionally and the total NO_x remains about the same.

Table 1 represents typical tail gas compositions found in modern well operated plants.

TABLE 1. Typical Ranges of Nitric Acid Plant Tail Gas Composition, Temperature, and Pressure.[1]

	Absorber Exit	Catalytic Combustor Inlet	Catalytic Combustor Outlet
Nitrogen Oxide, ppm	1000-2000	1000-2000	40-350
Nitrogen Dioxide, ppm	1000-2000	1000-2000	0-350
Oxygen, % by volume	2 to 4	2 to 4	0-1.5
Temperature, ^{o}F	90 - 100	800-1000[a]	1000-1300
Pressure, psig	85 - 95	80-90	75-90[b]

a) The higher temperature must be used for combustors using natural gas or propane as auxiliary fuel; the lower temperature can be used for fuels containing appreciable hydrogen.

b) Outlet pressure depends on type of catalyst, i.e. honeycomb or pellet.

2.2 Acid Mist[1]

[Acid mist emissions do not occur from a properly operated plant. Acid mist is present in the gases leaving the absorber. However, these are largely removed by centrifugal collectors or mesh mist collectors before the gases are heated prior to entering the catalytic combustor or turbo-expander. Trace quantities of acid mist present in the tail gas are vaporized as the gas is reheated.]

2.3 Visible Emissions[1]

[Visible emissions of a reddish-brown color occur from uncontrolled nitric acid plants due to the NO_2 in the exit gas. The opacity of stack gases varies with the NO_2 content and the stack diameter. The approximate visible threshold concentration of NO_2 is given by the suggested equation:

$$Co = \frac{2400}{d}$$

Where, d = stack diameter in inches and Co= visible concentration, ppm.[10]]Thus for a twelve-inch diameter exit stack, a visible emission would occur at an NO_2 concentration of approximately 200 ppm (2400/12). With larger diameter stacks the visible plume would occur at lower NO_2 concentrations. [The acid production system and storage tanks are the only significant sources of visible emissions at most plants. The volume of emissions from storage tanks is of considerably smaller magnitude.]

2.4 Reducing Compounds

[The NO_x abatement of nitric acid plant tail gas by the application of catalytic reduction systems can result in the production and emission of hydrocarbons, carbon monoxide and other reducing compounds. These compounds are produced as a result of the reducing atmosphere in the catalytic system. While there are few data on the subject, it is expected that for a given system, reducing compounds are produced in inverse proportion to NO_x.]The relevance of these secondary emissions is not well documented. To date there has been no attempt to control their release to the atmosphere.

EPA performance tests showed carbon monoxide concentrations of 400 to 650 ppm at three plants and a fourth system at 3200 ppm. Average NO_x and carbon monoxide concentrations are listed below.

TABLE 2. Emissions of Carbon Monoxide and Nitrogen Oxides from Nitric Acid Plants.

	Average Emissions to Atmosphere, ppm by volume	
	NO_x	CO
Plant #1	140	650
Plant #2	48	400
Plant #3	325	500
Plant #4	23	3200

Information as to oxygen content and other pertinent variables would be necessary to draw a correlation between concentrations of the various possible air contaminents. These data are not available for the installations tested.

The performance tests showed traces of hydrogen cyanide (4 and 7 ppm) at two of the four test sites. There appeared to be no correlation between carbon monoxide and cyanide production. The tests were accomplished with indicator tubes.

In addition to carbon monoxide and hydrogen cyanide there probably are measurable releases of hydrocarbons and ammonia at many nitric acid produc-

tion facilities equipped with catalytic systems.] Further testing obviously is required. If significant quantities of reduced compounds are found to be generated, performance standards and control equipment may be required. [The introduction of air downstream of the catalysts could oxidize these materials to carbon dioxide and water vapor.]

3.0 CONTROL TECHNOLOGY

[Except during plant startup, NO_x emission from acid production can be held below 3.0 lbs per ton of acid (209 PPM by volume).] This emission rate should be considered the upper limit. [Under most conditions NO_x concentrations can be held substantially below 200 ppm, particularly if hydrogen containing fuels are utilized in conjunction with catalytic reduction systems.]

[It has been demonstrated that catalytic reduction systems can be used to meet this emission level.] However, conditions in the acid production system and in the catalytic system must be tightly controlled and the equipment must be well monitored.

3.1 Plant Design and Operation [1]

[Good plant design provides adequate compressor capacity to maintain the high pressures in the absorption tower and to maintain sufficient oxygen for the oxidation of NO to NO_2 in the absorption tower. Adequate cooling of the absorption tower is also required to remove the heat of reaction and thus increase absorption rates.] This cooling is accomplished by passing cold water through cooling coils in the absorbers. The availability of a cold supply of water is an important factor in efficient absorber operation, especially in warm climates. [Current plant design practices limit, for economic reasons, the NO_x concentration in the tail gas to about 2000 ppm.]

Proper operation requires operating the plant at the design production rate and acid concentration. Strict maintenance of the high pressure lines, especially the heat exchangers, is also required to prevent NO_x escape to the atmosphere. Leaks in the shell and tube heat exchangers can cause gas streams containing 8 to 9 percent NO_x to flow into the tail gas stream, thus significantly increasing the tail gas NO_x emissions. Routine measurements of the gas stream will indicate process leaks.

3.2 Catalytic Combustion[1]

On all recently constructed plants catalytic combustors have been used for energy recovery. [In these devices, the absorber tail gas is heated to the necessary catalyst ignition temperature, mixed with fuel (natural gas, propane, or hydrogen-rich ammonia purge gas,) and passed over a catalyst bed.] A typical catalytic unit is shown in Figure 2.

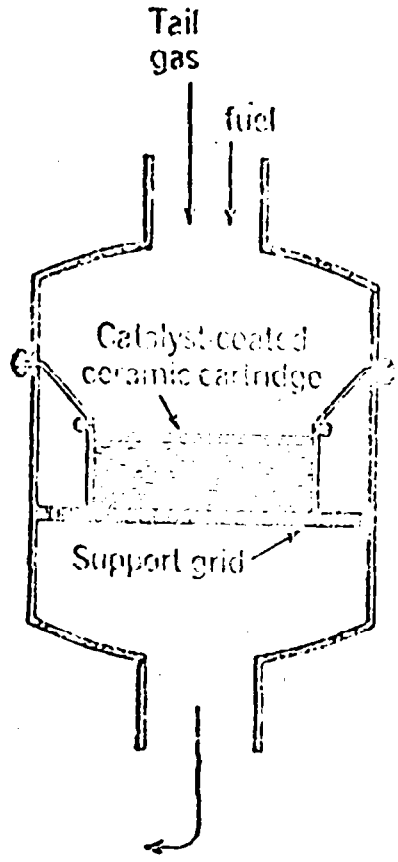

Figure 2. Typical catalytic combustion unit

A number of reactions take place resulting in increased gas temperature, and the dissociation and decomposition of NO_x. [The following reactions using methane as the fuel illustrate the major reactions:

$$CH_4 + 2\ O_2 \rightarrow CO_2 + 2\ H_2O \qquad (4)$$

$$CH_4 + 4\ NO_2 \rightarrow 4\ NO + CO_2 + 2\ H_2O \qquad (5)$$

$$CH_4 + NO \rightarrow 2\ N_2 + CO_2 + 2\ H_2O \qquad (6)$$]

[Reactions (4) and (5) proceed rapidly, with evolution of considerable heat. Since almost all the nitrogen dioxide is converted to nitric oxide through reaction (5), the reaction products of (5) are colorless even though there is yet no substantial destruction of nitric oxide. The reaction of further amounts of natural gas with nitric oxide in accordance with reaction (6), which takes place more slowly, results in decomposition of the nitric oxide to nitrogen. The last reaction must be near complete to achieve the performance standard of 3.0 lb per ton of acid (209 ppm).]

[Usually the catalyst consists of 0.5 percent platinum or palladium on a support such as woven Nichrome ribbon or ceramic material having a pelleted, spherical, or honeycomb structure.] The catalyst will withstand temperatures as high as 1500°F, which is also the approximate upper temperature limit for the reaction vessels used in this service.

[Space velocities of about 100,000 $ft^3/hr/ft^3$ catalyst are used for honeycomb catalyst and about 30,000 for pelletized catalyst.]

[Temperature rise, a critical factor in NO_x elimination, is governed by the oxygen content of the incoming gas stream. Initial ignition temperature is determined by the type of fuel and catalyst.] With natural gas fuel, temperatures in the 900-950°F range normally are required for ignition. The temperature rise is about 250°F for each percent oxygen in the tail gas. [A combustor exit temperature of about 1500°F is required to reduce NO_x below 200 ppm in a stream containing 2.5 percent oxygen.]

[With hydrogen fuel, the ignition temperature is much lower--about 290°F--and the temperature rise is about 270°F for each percent oxygen in the tail gas. An exit temperature of only about 1000°F is required for essentially complete reduction of NO_x if there is 2.5 percent oxygen in the absorber tail gas.]

[Nitric acid plants which utilize ammonia plant purge gas (60 percent H_2, 15 percent CH_4, some ammonia and inerts) can achieve nearly complete reduction of NO_x in single stage combustors, and maintain exit temperatures on the order of 1200°F. The purge gas is a waste stream which would otherwise be burned in a flare.]

[Because temperature limits the extent of reaction in a single stage reactor, a two-stage reduction process may be required to split the heat load.] This permits greater use of natural gas such that all oxygen in the tail gas is reacted and the nitrogen oxides are decomposed in accordance with equation (6). [It is possible to meet the 3.0 pound per ton NO_x limit with a single stage system if the oxygen content of the tail gas is kept

below 3.0 percent so as to reduce the heat generated by oxygen burnout. Most catalytic systems are of single stage design.

Nitrogen oxides concentrations from catalytic combustion units vary as a function of plant design, fuel type, pressure, temperature, space velocity, catalysts and reactant concentrations. Results of EPA performance tests are presented in Figure 3 for five operating nitric acid plants. The two facilities burning hydrogen-rich purge gas were shown to operate well within the performance standard. Only one of the three natural gas systems met the standard during the EPA tests. Nevertheless, the latter installation reduced NO_x emissions to the same level as the best purge gas system. The high values found at Plant A were attributed to an inert catalyst. Test values at Plant B also indicated deactivation of the catalyst during some eight years of operation. Company tests for extended periods prior to EPA testing indicated that Plant B could be operated consistently within the performance standard. NO_x emissions were measured both by the phenoldisulfonic acid method and with continuous monitoring instruments.

During all five performance tests there were no visible emissions in the stack gases. While NO_2 was not measured separately, it is assumed that the catalytic systems were converting almost all NO_2 to NO. Thus, the measured NO_x was essentially all NO.

It is uncertain how long typical catalysts can be utilized without exceeding the performance standards. A catalyst life of one year is assumed in developing the operating costs of Section 5.0. Nevertheless, it appears that commercial catalysts may retain sufficient activation for considerably longer periods. With suitable NO_x monitoring, operators will be able to make judgements as to the system effectiveness. They will be required to replace catalysts as necessary to maintain operation within the limits of the standard. If catalyst life is extended appreciably longer than one year the resultant operating costs will be less than indicated in Section 5.0.

FIGURE 3. NO_x EMISSION TEST DATA FROM NITRIC ACID PLANTS

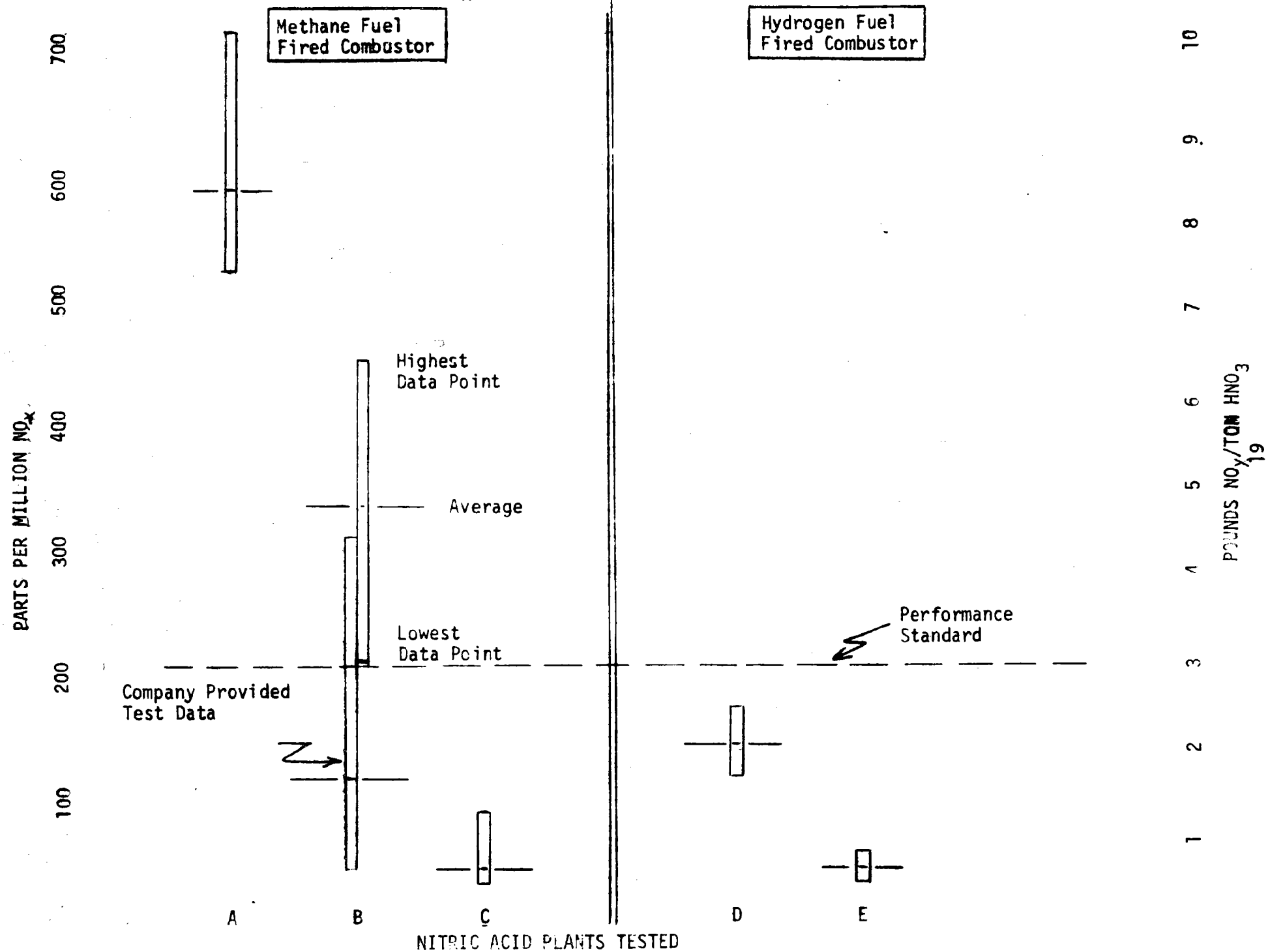

3.3 Molecular Sieves

[Oxides of nitrogen can be selectively adsorbed from exhaust gases using synthetic zeolites commonly termed molecular sieves. The sieves will adsorb both NO and NO_2 but have a greater capacity for NO_2. Catalytic conversion systems may be required in some systems to convert NO to NO_2 before adsorption.] [When they become saturated the sieves are desorbed at 400 to 500°F with nitrogen oxides and/or nitric acid being fed back to the acid production system.]

[To date molecular sieves have been demonstrated only on a small pilot plant scale handling 10 to 25 cfm of nitric acid plant exhaust gases.[4]] [The technology is not considered adequately demonstrated for the purposes of supporting these performance standards.] Nonetheless, molecular sieve control systems are being offered for sale on full-scale nitric acid plants. [The NO_x control systems, if feasible, would appear to be applicable to both new and existing acid production facilities.]

Molecular sieves have been employed successfully in other areas and for other pollutants. They find wide use in the natural gas industry for removing hydrogen sulfide and carbon dioxide. [If they could be applied to the nitric acid industry, NO_x levels would be expected to be well below 50 ppm or 0.7 pounds per ton of acid.] Furthermore, [the by-product reducing compounds of catalytic systems could be eliminated.]

Figure 4 depicts a simplified process flow sheet for a three-bed NO_x

recovery system, one bed is on an adsorption cycle, one on a desorption cycle, and the final bed is on a cooling cycle. The three-bed system is required for continuous sources since approximately the same length of time is required for desorption as for adsorption, and the bed must be cooled before adsorption can occur.

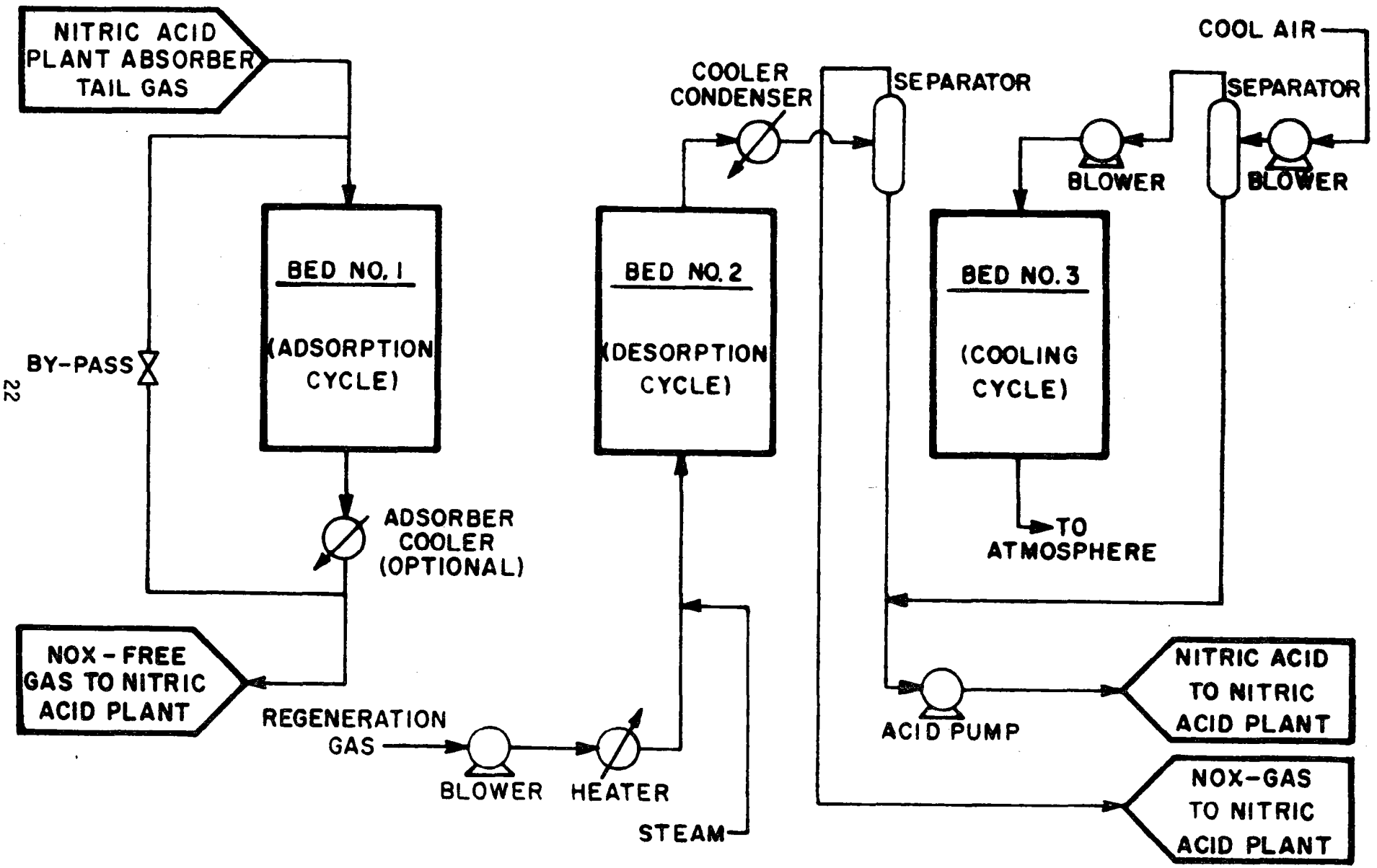

FIGURE 4 SIMPLIFIED PROCESS FLOW SHEET
THREE-BED MOLECULAR SIEVE RECOVERY SYSTEM

4.0 INSTRUMENTATION

The control of NO_x at nitric acid production facilities is dependent on several variables. The only current demonstrated technology--catalytic decomposition--is more sensitive to process conditions than are most abatement devices for other pollutants. Experience has shown that even well-designed systems have operated with excessively high NO_x emissions for extended periods because the operators were not aware of the condition. In order to optimize NO_x control, operators will be required to install, operate, and maintain in calibration suitable equipment for the continuous monitoring and recording of total nitrogen oxides (NO_x). Sampling ports are to be located downstream of air pollution control equipment and the gas stream is not to be diluted in any way prior to sampling. The operator will be required to provide such other operating information as is necessary to relate measured NO_x concentrations to the standard of performance.

The instruments shall be capable of measuring NO_x concentrations over the range 30 to 1000 ppm by volume. The accuracy required by the regulation--plus or minus 20 percent with a 95 percent confidence level--is deemed acceptable for monitoring purposes although greater accuracy might be required for specific source tests.

Instruments for NO_x monitoring have been developed recently. The Environmental Protection Agency is reviewing NO_x instruments and will provide

guidance to owners and operators who request such information. [A list of NO_x monitoring devices acceptable for the purposes of this standard will be available on or about February 1, 1972.] Lists of instruments for NO_x and other pollutants will be revised periodically as new instruments are developed and refined.

5.0 CONTROL COSTS

5.1 Capital Investment

The capital requirements necessary to control air pollution from new nitric acid plants have been developed from a model plant approach and data that represents the typical plant to be constructed in the next five years.

From a variety of sources, including a study of every new facility completed since 1960, average characteristics of the model plant have been calculated. An important item is plant size. Figure 5 shows the average capacity for all new units installed since 1960. Based upon this and other information, the typical projected nitric acid facility is assumed to be a 300 short ton per day (100,000 s.t.p.y.) operation requiring an initial capital investment of $2.6 million (excluding air pollution control equipment). The plant will be the pressure process type and will include a turbine compressor, ammonia oxidizer, cooler condenser, separators, absorption tower, waste heat boilers, stack, foundation, piping, and numerous minor assets.

For purposes of analysis, the following two commercially demonstrated control options will be considered:

1. Single-stage, high-temperature catalytic reduction unit with waste heat boiler.
2. Dual-stage catalytic reduction unit with waste heat boiler and inter-stage cooling.

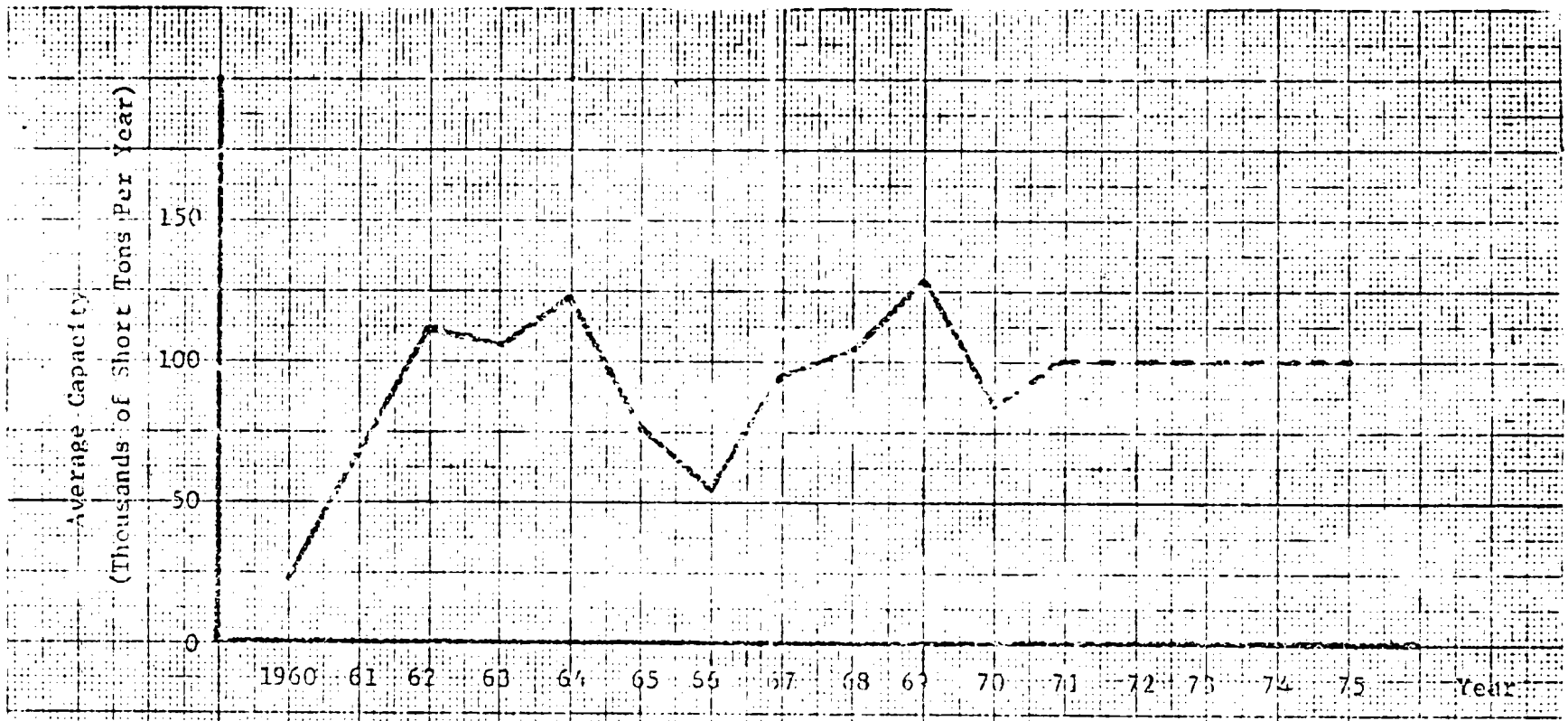

Figure 5 : Average Size of New Production Units Added by the Nitric Acid Industry: 1960 to 1975

The determination of control expenditures for a grass roots nitric acid plant is complicated by differences in design philosophy and choices of heat and power recovery among different construction firms. For the single-stage system, a representative of the D.M. Weatherly Co.[5] indicated that the additional investment for control would be negilgible. Extrapolating from the discussion[6] of Newman of the Chemical Construction Corp., the net investment for a single-stage reduction system could be as much as $100,000 for a 300 tpd plant. This latter figure is in accord with an estimate furnished by Hercules, Inc.[5] and is adopted for the analysis. For a dual-stage system with waste heat boiler, the net investment should be in the range of $150,000 to $250,000; investments will vary depending upon steam needs and power requirements. An average investment of $200,000 is assumed.

5.2 Financial Impact

Because nitric acid production is 90 percent captive, a real market price does not exist, and an operating statement for the model 300 tpd unit cannot be developed. This problem is overcome by considering the total fertilizer manufacturing plant, i.e., a nitric acid plant in combination with an ammonium nitrate facility of comparable size. A market price for ammonium nitrate does exist, and the air pollution control cost for a nitric acid plant will be analyzed in terms of its effect upon the income statement for the total plant. The system is shown in elementary fashion in Figure 6.

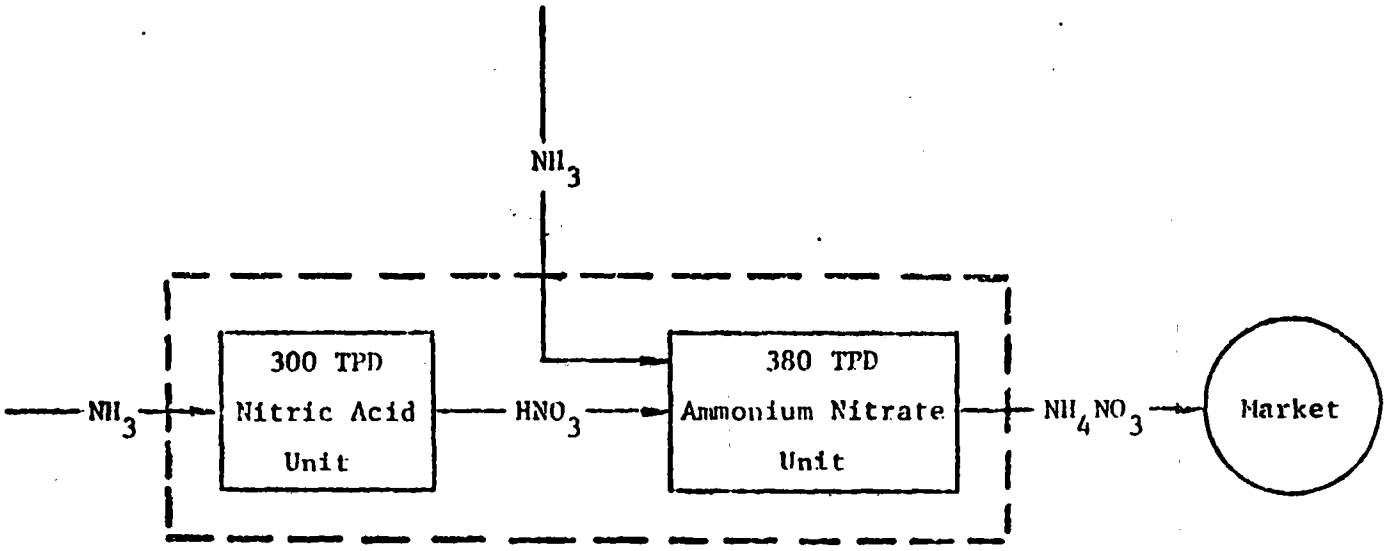

Figure 6 Schematic of total fertilizer manufacturing plant

Manufacturing costs for the 300 tpd nitric acid plant have been developed and are shown in Table 3. The additional assumptions underlying this table are:

1. Production is 90 percent of capacity or 90,000 short tons per year.
2. Plant life is 10 years.
3. Straight-line depreciation.
4. Plant financed at 7 percent interest rate.
5. Unit costs for production factors are based upon current prices.

It is seen that the production cost of nitric acid is closely related to the current price of ammonia. With a price of $35 per short ton for anhydrous ammonia, the calculated production cost of nitric acid is $19.73 per short ton.

TABLE 3

PRODUCTION COSTS FOR A 300 TPD NITRIC ACID PLANT

Cost Category	Units	Units/Short Ton HNO_3	Units/Year	Dollars/Unit	Cost/Year	% of Total Cos
Ammonia	Short Tons	.290	26,100	$35.00	$913,500	51.4%
Power	Kw · Hr	10.0	900,000	.01	9,000	.5
Catalyst	Grams	.140	12,600	3.50	44,100	2.5
Cooling Water	M · Gallons	30.0	2,700,000	.01	27,000	1.5
Boiler and Process Water					Nominal	0.0
Labor	Man · Hours	.15	13,500	3.00	40,500	2.3
Maintenance	5% of Investment				130,000	7.3
Administration					45,000	2.5
Overhead					100,000	5.6
Taxes and Insurance					25,000	1.4
Interest					182,000	10.2
Depreciation					260,000	14.6
				Total Cost	1,776,100	100.0%
				Cost/Short Ton HNO_3	$19.73	

A 380 tpd ammonium nitrate facility is compatible with the model nitric acid plant and requires a capital investment of $2.8 million. The plant is assumed to be the prilling process type and includes nitric acid neutralizers, evaporators, filters, prilling tower, screening, pumps, piping, foundation, storage facilities for 90 days, and various minor assets. Manufacturing costs for this unit are shown in Table 4. The additional assumptions underlying this table are:

1. Production is 90 percent of capacity of 112,860 short tons per year.
2. Plant life is 10 years.
3. Straight-line depreciation.

Table 4 reveals that the production cost of ammonium nitrate depends predominately upon the cost of ammonia and nitric acid. With the cost of ammonia at $35.00 per short ton, the cost of ammonium nitrate is $36.00 per short ton.

Control costs for a single-stage and a dual-stage catalytic reduction unit are shown in Tables 5 and 6, respectively. Utility and catalyst requirements for the single-stage unit were obtained from the D.M. Weatherly Co. Similar requirements for the dual-stage unit were deduced from data presented by Bartok, et. al.[7] However, catalyst costs as reported by Bartok have been increased to reflect current estimates of nitric acid plant owners. Tables 5 and 6 are also based upon the following assumptions:

1. The catalyst is a platinum reactive surface supported on alumina in the form of a honeycomb structure.
2. Catalyst life is one year.

TABLE 4

PRODUCTION COSTS FOR A 380 TPD AMMONIUM NITRATE PLANT

Cost Category	Units	Units/Short Ton NH_4NO_3	Units/Year	Dollars/Unit	Cost/Year	% of Total Co
Nitric Acid	Short Tons	.80	90,000	$19.73	$1,776,100	43.7%
Ammonia	Short Tons	.225	25,394	35.00	888.790	21.9
Power	Kw · Hr	40.0	4,514,400	.01	45,140	1.1
Water	M · Gallons	8.0	902,880	.01	9.030	.2
Steam	Tons	2.5	282,150	1.00	282,150	6.9
Conditioner	Tons, Diatomaceous Earth	.03	3,386	50.00	169,300	4.2
Labor	Man · Hours	.48	54,173	3.00	162,520	4.0
Maintenance	3% of Investment				84,000	2.1
Administration					45,000	1.1
Overhead					100,000	2.5
Taxes and Insurance					25,000	.6
Interest					196,000	4.8
Depreciation					280,000	6.9
				Total Cost	$4,063,030	100.0%
				Cost/Short Ton NH_4NO_3	$36.00	

TABLE 5

CONTROL COST FOR A 300 TPD NITRIC ACID PLANT
USING A SINGLE-STAGE REDUCTION UNIT

Cost Category	Units	Units/Short Ton HNO_3	Units/Year	Cost/Unit	Cost/Year
Catalyst	Charge	1/90,000	1	$40,000	$40,000
Fuel	MM BTU	2.05	184,500	.45	83,025
Steam Recovery	Tons	.95	85,500	1.00	(85,500)
Taxes and Insurance					2,500
Interest					7,000
Depreciation					10,000
				Total Control Cost	$57,025
				Control Cost/Ton HNO_3	$ 0.64

TABLE 6

CONTROL COST FOR A 300 TPD NITRIC ACID PLANT
USING A DUAL-STAGE COMBUSTOR

Cost Category	Units	Units/Short Ton HNO_3	Units/Year	Cost/Unit	Cost/Year
Catalyst	Charge	1/90,000	1	$55,000.	$55,000
Fuel	MM BTU	2.05	184,500	.45	83,025
Steam Recovery	Tons	.96	86,400	1.00	(86,400)
Taxes and Insurance					5,000
Interest					14,000
Depreciation					20,000
				Total Control Cost	$90,625
				Control Cost/Ton HNO_3	$1.01

3. Material Costs are based on current prices.
4. Equipment life is 10 years.
5. Straight-line depreciation.
6. Control equipment financed at 7 percent interest rate.
7. Nitric acid production at 90 percent of capacity.

As previously noted, the capital investments for the single-stage and dual-stage catalytic reduction units are, respectively, $100,000 and $200,000. It is seen that the control cost per short ton of nitric acid is ~~$0.48~~ for the single-stage unit and $1.01 for the dual-stage unit.

5.3 Income Effects

Table 7 shows income statements for the nitric acid - ammonium nitrate model system as derived from production costs for nitric acid and ammonium nitrate and air pollution control costs related to nitric acid manufacture. Separate statements apply to the cases of untreated absorber spent gas, control by a dual-stage catalytic reduction unit. The Table incorporates the following assumptions and definitions:

1. Market price of ammonium nitrate is $43.00 per short ton, bulk shipment, f.o.b. plant.
2. Marketing expenses are 10 percent of production costs for ammonium nitrate.
3. Income tax rate is 45 percent.
4. Annualized control cost is the net cost of control after taxes, i.e., the reduction in net profit.

5. Cash flow is the net earnings after taxes plus depreciation.
6. Return on investment is the interest rate that equates cash outflows with cash inflows.

Table 7 shows the annualized air pollution control costs of $.20 and $.44 per short ton of ammonium nitrate result from the application of, respectively, a single-stage and a dual-stage catalytic reduction unit. Net earnings as a percentage of sales for the nitric acid-ammonium nitrate plant are decreased by the addition of the control device from 4.3 to 3.9 percent in the former case and from 4.3 to 3.3 percent in the latter.

TABLE 7.

MODEL SYSTEM INCOME STATEMENTS

(Thousands of dollars and percentage of sales)

	Without control equipment		With single-stage unit		With dual-stage unit	
	10^3 $	%	10^3 $	%	10^3 $	%
Sales	4,853	100.0	4,853	100.0	4,853	100.0
Materials	2,388	49.2	2,411	49.6	2,440	50.3
Labor	203	4.2	203	4.2	203	4.2
Maintenance	214	4.4	214	4.4	214	4.4
Administration	90	1.9	90	1.9	90	1.9
Overhead	200	4.1	200	4.1	200	4.1
Taxes and insurance	50	1.0	53	1.1	55	1.1
Interest	378	7.8	385	7.9	392	8.1
Depreciation	540	11.1	550	11.3	560	11.5
Marketing	406	8.4	406	8.4	406	8.4
Net earnings before taxes	384	7.9	341	7.0	293	6.0
Tax	173	3.6	153	3.1	132	2.7
Net earnings	211	4.3	188	3.9	161	3.3
Cash flow	751	15.5	738	15.2	721	14.9
Annualized control cost	0	0.0	23	0.4	50	1.0
Net earnings/ short ton NH_4NO_3	$1.87		$1.66		$1.43	
Cash flow/ short ton NH_4NO_3	$6.65		$6.54		$6.39	
Annualized control cost/short ton NH_4NO_3	$0.00		$0.20		$0.44	
Return on investment	6.51%		5.75%		4.88%	

6.0 RETROFITTING EXISTING NITRIC ACID PLANTS

The standard of performance was developed for new and substantially modified nitric acid plants. Except for modifications, the NO_x emission limit does not apply to existing facilities. Nevertheless, it is recognized that in many areas, State and local agencies will have to consider available means of reducing NO_x emissions from existing sources including nitric acid production facilities. Suggestions are provided as to what avenues may be open to existing plants. The feasibility of any particular approach will depend on the specifics of the operation.

All plants, including those that are completely uncontrolled, could benefit from continuous NO_x monitoring. Knowledge of exit NO_x concentrations will allow operators to adjust process variables for maximum absorption and for maximum NO_x control if abatement equipment should be in use.

Modifications which can be considered to reduce NO_x emissions from uncontrolled plants are:

1. Improve absorption in the tower through higher pressures, better cooling or increasing the size of the absorber. Some existing plants report NO_x concentrations from the absorption tower at less than 1000 ppm.
2. Addition of a catalytic combustor, waste heat boiler, and associated high temperature piping, turbo-expander, etc.
3. Utilization of molecular sieves to adsorb NO_x.

For those existing plants that utilize catalytic combustion for power recovery and decolorization, changes that could be considered are:

1. Addition of a heat exchanger and a second catalyst chamber to further reduce NO to nitrogen and oxygen.
2. Switch from natural gas to hydrogen-rich fuel such as purge gas. This would permit a lower catalysis temperature and allow the operator to stay within the temperature limits of the system

The problems of adapting these modifications and determining costs obviously will vary appreciably from plant to plant.

7.0 REFERENCES

7.1 Cited References

1. Establishment of National Emission Standards for Stationary Sources, Volume V, Nitric Acid Plants. Research Triangel Institute and PEDCo - Environmental Specialists, Inc. NAPCA Contract No. CPA-70-164, September 30, 1970.

2. Gerstle, R.W. and R.F. Peterson. Atmospheric Emissions from Nitric Acid Manufacturing Processes. National Center for Air Pollution Control. Cincinnati, Ohio. PHS Publication Number 999-AP-27. 1966.

3. Control Techniques for Nitrogen Oxide Emissions from Stationary Sources. National Air Pollution Control Administration. Washington, D.C. March 1970.

4. Harding, C.I., Removal and Recovery of Nitrogen Oxides from Waste Gases with Molecular Sieves. Presented at NO_x Seminar, Joliet, Illinois, June 1970.

5. Private Communications.

6. Newman, D.J., Nitric Acid Plant Pollutants, Chemical Engineering Progress, 67(2): 79-84. February, 1971.

7. Bartok, W., A.R. Crawford, A.R. Cunningham, H.J. Hall, E.H. Manny and A. Skopp. Systems Study of Nitrogen Oxide Control Methods for Stationary Sources. NAPCA Contract No. PH-22-68-55, Esso Research and Engineering Company. November, 1969.

7.2 General References

Air Quality Criteria for Nitrogen Oxides. Environmental Protection Agency. Washington, D.C. Publication No. AP-84. January 1971.

Andersen, H.C., et al., A New Family of Catalysts for Nitric Acid Tail Gases. Englehard Industries Technical Bulletin, VII (3): 100-105, December, 1966.

Anon. Nitric Acid: Smart Engineering Boosts the Yield. Chem. Eng., March 30, 1964, p. 38-40.

Brink, J.A., et al. Mist Removal from Compound Gases. Chemical Engineering, Prog. 62: 65, April, 1966.

Hardison, L.C., Techniques for Controlling the Oxides of Nitrogen, J. Air Pollution Control Association 20: 377-382. June, 1970.

Hunter, J.B., Platinum Catalysts and System for Air Pollution Control, Part I, Matthey Bishop, Inc., Bulletin THT-3000.

Newman, D.J., The Types of Nitric Acid Plants. Paper presented at joint NAPCA/MUCOM Seminar on Control of Nitrogen Oxides, Joliet, Ill., June 2-4, 1970.

Newman, D.J. Pollution from Nitric Acid Plants. Presented to American Institute of Chemical Engineers. Denver, Colorado. August 31, 1970.

National Emission Standards Study. United States Senate Document No. 91-63. March 1970.

Personal Communication. Dr. D. Byrwe, D.M. Weatherly Co., Atlanta, Georgia, September 3, 1970.

Personal Communication. H. Graham, Tennessee Valley Authority, Muscle Shoals, Alabama, August 31, 1970.

Romeo, P.L., Control of Nitrogen Oxides at MUCOM Installations. Presented at the joint NAPCA/MUCOM Seminar, Joliet, Illinois. June 3-5, 1970.