Note: This is a reference cited in *AP 42, Compilation of Air Pollutant Emission Factors, Volume I Stationary Point and Area Sources.* AP42 is located on the EPA web site at www.epa.gov/ttn/chief/ap42/

The file name refers to the reference number, the AP42 chapter and section. The file name "ref02_c01s02.pdf" would mean the reference is from AP42 chapter 1 section 2. The reference may be from a previous version of the section and no longer cited. The primary source should always be checked.

88.8BR CH.4 #1

Evaluator/Date _____

# PRIMARY EMISSIONS TEST REPORT EVALUATION

STATE: ~~OK~~ AL TEST DATE: ~~May 12-19~~ Dec. 6, 1990 PROCESS(ES) TESTED (SCC): _____

FACILITY: LaRoche Industries, Inc. Nitric and Plant

ADDRESS: _____

Cherokee, AL

OBJECTIVE CATEGORIES:

| | | | |
|---|---|---|---|
| Inclusion of production/ operation rate | ✓ | Documentation of stack/process tested | ✓ |
| Documentation of Methods 1-4 (1), (2), (3), (4) | ✓ | Documentation of test/ estimation method | ✓ |

Traverse Pts Moisture

RATED ITEMS: [1-3, 3 being highest]

| | | | |
|---|---|---|---|
| Process Description | Generic from AP-42 2 | Equipment prep documentation | 2 |
| Documentation of control equipment and efficiency | Nonoxidic assumed | Thorough field data on standard forms for at least 3 runs | 2 |
| Documentation of Q/A | 0 | Consistency of results | 3 |

T ✓, Vapor ✓, ΔP ✓

Source Test Information Form

AP-42

Date: 6-25-92

Section: 5.9 Nitric Acid

Firm/Company: D La Roche Industries Inc. Cherokee, AL

Testing Group: Sanders Engineering + Analytical Services, Inc,

Test Date: Dec. 6, 1990

Special Processes/Conditions/Other Comments:

p.4 Catalytic ~~oxidation~~ ok of ammonia ~~fractionation~~

Control Processes:

No → Control Devices.

A

ESB 7/10/92

Calibration Data: ✓ Yes ___ No

Sampling Method: 2, 3, 4, 7E

Production Rate: ✓ Given ___ Calculated

540 tons/day

Production Rate Source: Next to Last Page → Daily Production + Inventory Report

Results:

| Run # | Production Rate Mton/day | Mton/year | Emission Factor kg/Mton | lbs/Mton | NOx |
|---|---|---|---|---|---|
| 1 | 540 stons | | lb/ton (100%) Nitric Acid | | 0 % |
| 2 | 540 | | 1.035 | | 0 % |
| 3 | 540 | | 0.863 | | 0 % |
| | | | 0.757 | | 0 % |
| Average | 540 stons/day | | 0.867 | | 0 % |

Test Rating: ____

1

# ADEM

## ALABAMA
## DEPARTMENT OF ENVIRONMENTAL MANAGEMENT

Leigh Pegues, Director

1751 Cong. W. L.
Dickinson Drive
Montgomery, AL
36130
(205) 271-7700
FAX 271-7950
270-5612

Field Offices:

110 Vulcan Road
Birmingham, AL
35209
(205) 942-6168
FAX 941-1603

P.O. Box 953
Decatur, AL
35602
(205) 353-1713
FAX 340-9359

2204 Perimeter Road
Mobile, AL
36615
(205) 479-2336
FAX 479-2593

Guy Hunt
Governor

June 9, 1992

Mr. Colin Campbell
Pacific Environmental
Services, Inc.
3708 Mayfair Street
Suite 202
Durham, NC 27707

Dear Mr. Campbell:

Enclosed is the information you requested on emissions tests performed at the LaRoche Industries, Inc. facility in Cherokee, Alabama on the Nitric Acid Plant and the Ammonium Nitrate Prilling Unit. Specific production data you requested for the emissions test performed at HISPAN Corporation was not recorded since emission limits are not production based, but permit applications indicate that the Polyacrylonitrile Unit operates at a constant production rate equivalent to a maximum capacity of 1700 Metric Tons/Year.

If you have any questions concerning this matter, please feel free to contact me at 205/271-7861 in Montgomery.

Sincerely,

Daniel Price
Industrial Unit
Engineering Branch
Air Division

DP:klh

Enclosure

Printed on Recycled Paper

Received June 12/90

SANDERS ENGINEERING & ANALYTICAL SERVICES, INC.

# Oxides of Nitrogen Emissions Test Report

*for*

## LaRoche Industries, Inc.

*Cherokee, Alabama*

*Nitric Acid Plant*

DECEMBER 6, 1990

1568 LEROY STEVENS ROAD

MOBILE, ALABAMA 36695 • 205/633-4120

## TABLE OF CONTENTS

1. INTRODUCTION . . . . . 1

2. SUMMARY AND DISCUSSION OF RESULTS . . . . . 2

3. PROCESS DESCRIPTION . . . . . 4

4. SAMPLING AND ANALYTICAL PROCEDURES . . . . . 6
   4.1. Introduction . . . . . 6
   4.2. Sample Point Location . . . . . 6
   4.3. Emissions Determination . . . . . 6

5. $NO_x$ SAMPLING PROCEDURE . . . . . 7
   5.1 Sample Recovery & Analysis . . . . . 9

APPENDIX A: VOLUMETRIC FLOW TEST RESULTS . . . . . 11

APPENDIX B: FIELD DATA SHEETS . . . . . 12

APPENDIX C: CALIBRATIONS . . . . . 13

APPENDIX D: COMMUNICATIONS . . . . . 14

## LIST OF TABLES

TABLE I: NITROGEN OXIDES TESTING . . . . . 3

## LIST OF ILLUSTRATIONS

FIGURE 1: SAMPLE POINT LOCATIONS . . . . . 10

## 1. INTRODUCTION

Sanders Engineering & Analytical Services, Inc., (SEAS) performed an oxides of nitrogen emissions test at the LaRoche Industries, Inc., nitric acid plant, on December 6, 1990. The testing was performed in accordance with the applicable U.S. EPA procedures specified at **40 CFR, Part 60, Appendix A**.

The purpose of the tests was to demonstrate compliance with the rules and regulations of the Alabama Department of Environmental Management and to meet the necessary requirements contained in the permit to operate issued by the Alabama Department of Environmental Management.

The tests were conducted by Mr. Robert Richmann and Mr. Dean Redditt of Sanders Engineering & Analytical Services, Inc., and was coordinated with Mr. Howard Hargett of LaRoche Industries, Inc. Mr. John Hughes of the Alabama Department of Environmental Management was present to observe the testing.

The tests were conducted in accordance with the rules and regulations of the Alabama Department of Environmental Management . Further discussion of the test methods are included in the report.

## 2. SUMMARY AND DISCUSSION OF RESULTS

The summary of the nitrogen oxides emissions test results are presented in Table I. The results of the volumetric flow rate testing are presented in Appendix A. The complete field data sheets including a copy of the recorder chart are included in Appendix B. The initial and final calibrations of the equipment used in the sampling program are included in Appendix C. The correspondence and information provided by LaRoche Industries, Inc., is presented in Appendix D.

The results of the nitrogen oxides test indicate the nitric acid plant has an emission rate of 0.876 lbs/ton of 100% nitric acid. The applicable Alabama Department of Environmental Management rules and regulations require a nitrogen oxides emission rate of no greater than 3.0 lbs/ton of 100% Nitric Acid.

## TABLE I: NITROGEN OXIDES TESTING

## LAROCHE INDUSTRIES INC.

## NITRIC ACID PLANT

## SUMMARY OF RUNS

| Run | $\bar{C}$ | $C_o$ | $C_{ma}$ | $C_m$ | $C_{gas}$* | lb/ton** of 100% nitric acid |
|---|---|---|---|---|---|---|
| 1 | 93.55 | 1.0 | 125 | 126 | 92.55 | 1.035 |
| 2 | 72.70 | 1.0 | 125 | 122.5 | 73.77 | 0.863 |
| 3 | 67.20 | 0.5 | 125 | 122.5 | 68.33 | 0.757 |
| AVG | | | | | 78.22 | 0.867 |

WHERE:

$\bar{C}$ = Average Analyses response, dry basis, ppm

$C_o$ = Average Initial and Final zero bias check, ppm

$C_m$ = Average Initial and Final upscale bias check, ppm

$C_{ma}$ = Actual Concentration of the upscale calibration gas, ppm

* $C_{gas} = (\bar{C} - C_o)\, C_{ma} / C_m - C_o$

** lb/ton of 100% Nitric Acid = $(2.0744 \times 10^{-7})$ (ppm) (SDCF / min)

## 3. PROCESS DESCRIPTION

Nearly all the nitric acid produced in the United States is manufactured by the catalytic oxidation of ammonia. This process typically consists of three steps, each of which corresponds to a distinct chemical reaction. First, a 1:9 ammonia / air mixture is oxidized at high temperature (1380 - 1470°F or 750 - 800°C) as it passes through a platinum/rhodium catalyst, according to the reaction:

$$\underset{\text{Ammonia}}{4\,NH_3} + \underset{\text{Oxygen}}{5O_2} \rightarrow \underset{\text{Nitric Oxide}}{4NO} + \underset{\text{Water}}{6H_2O} \qquad (1)$$

After the process stream is cooled to 100°F (38°C) or less by passage through a cooler / condenser, the nitric oxide reacts with residual oxygen to form nitrogen dioxide:

$$2NO + O_2 \rightarrow \underset{\text{Nitrogen Dioxide}}{2NO_2} \underset{\rightarrow}{\leftarrow} \underset{\text{Nitrogen Tetroxide}}{N_2O_4} \qquad (2)$$

Finally, the gases are introduced into a bubble cap plate absorption column for contact with a countercurrent stream of water. The exothermic reaction that occurs is:

$$3NO_2 + H_2O \rightarrow 2HNO_3 + NO \qquad (3)$$

The production of nitric oxide in the third reaction necessitates the introduction of a secondary air stream into the column to oxidize it into nitrogen dioxide, thereby perpetuating the absorption operation.

The spent gas flows from the top of the absorption tower to an entrainment separator for acid mist removal, through a heat exchanger in the ammonia oxidation unit for energy absorption by the ammonia stream, through an expander for energy recovery, and finally to the stack. In most plants, however, the tail gas is treated to remove residual nitrogen oxides before release to the atmosphere.

# 4. SAMPLING AND ANALYTICAL PROCEDURES

## 4.1. Introduction

All sampling and analytical procedures utilized were those recommended by the United States Environmental Protection Agency and the Mississippi Department of Environmental Quality. The sampling procedures are described in 40 CFR, Part 60, Appendix A, Methods 2, 3, 4, and 7E.

## 4.2. Sample Point Location

The sample point location and outlet duct schematic are presented in Figure 1.

## 4.3. Emissions Determination

The method utilized for the determination of the oxides of nitrogen and carbon monoxide emissions was method 7E. As the source is based on a lbs/(ton of nitric acid) emissions rate, the average concentration of the respective pollutant was multiplied by the volumetric flow rate of the unit to determine the lbs/(ton of 100% nitric acid) emissions.

## 5. $NO_x$ SAMPLING PROCEDURE

The $NO_x$ sampling procedure utilized was an EPA Method 7E, which was approved by the Alabama Department of Environmental Management. A brief description of the sampling procedure is as follows.

The analyzing instrument used in this test was a Thermo Electron Model 10A chemiluminescent NO-$NO_x$ gas analyzer, Serial No. 10AR-11795-126. The chart recorder used was a Soltec Model 1241.

The sampling train consisted of stainless steel and teflon tubing which ran from the stack to a three way valve connected to a teflon impinger in an ice bath. Teflon tubing was connected between the impinger box and the $NO_x$ analyzer. Teflon tubing was also connected between the calibration gas cylinders and the three way valve. The sample train is presented in Figure 2.

The instrument was allowed to warm up for at least 30 minutes before it was initially calibrated. Then a high range calibration gas between 80-90% of the span value was introduced to the instrument. The instrument was allowed to fully respond to the calibration gas and the analyzer was adjusted to the correct value. Next, a mid range calibration gas between 50 to 60 percent of the span was introduced to the instrument.

Ambient air was then used as zero air to check the zero reading of the instrument. If any of the readings indicated a difference of more than ± 2% of the span, the analyzer was recalibrated. Next, the high, middle and zero zones was introduced to the system at the three way valve. The response value for each of these gases was recorded,. The system response time was recorded during the bias check and found to be approximately 4 minutes.

To begin sampling, the three way valve was switched to allow the instrument to sample the exhaust gas. At the end of each run, the three way valve was switched to allow introduction of the calibration gas which was closest in value to the exhaust gas $NO_x$ concentration. Zero air was then introduced to the system. The zero and calibration drift were recorded. If the drift values were greater than ±5% of the span, then the run was invalidated. The three way switch was set to allow sampling of the exhaust gas, and the next run was begun. This procedure was repeated until nine runs were completed.

## 5.1 Sample Recovery & Analysis

After the tests were completed on each unit, the chart recorder data was reduced to give an average $NO_x$ concentration in ppm for each run. This average concentration was then corrected for the analyzer zero and span drift using the equation:

$$C\ gas = \frac{(C - CO)\ \ CMA}{(Cm - CO)}$$

Where:

C gas = Effluent gas Concentration, dry basis, ppm.

C = Average gas concentration indicated by the gas analyzer, dry basis, ppm.

CO = Average of Initial and final system calibration responses for the zero gas, ppm.

Cm = Average of initial and final calibration responses for the upscale calibration gas, ppm.

CMA = Actual concentration of the scale calibration gas, ppm.

# FIGURE 1
# SAMPLE POINT LOCATION
# LAROCHE INDUSTRIES, INC.
# NITRIC ACID PLANT

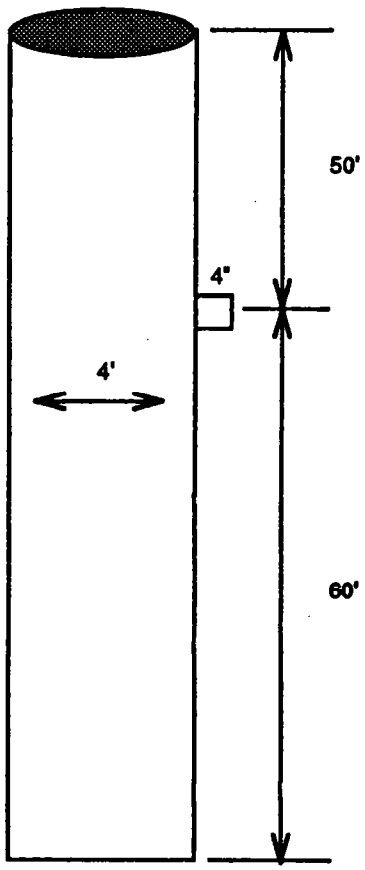


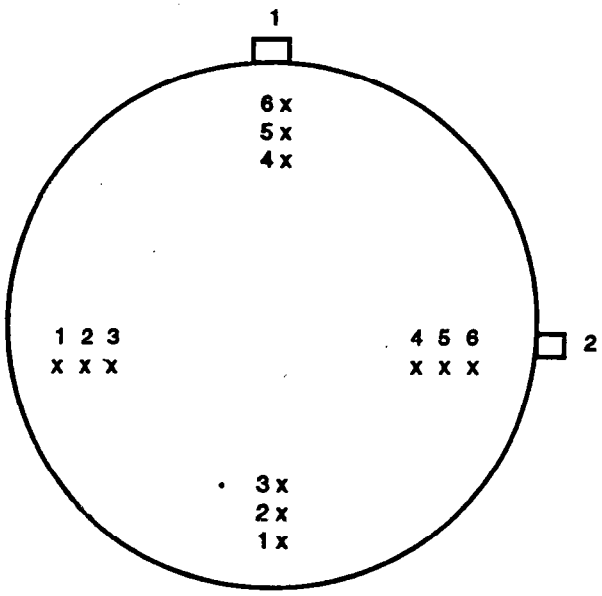


| POINT NUMBER | DISTANCE FROM STACK WALL |
|---|---|
| 1 | 49.9 |
| 2 | 45.0 |
| 3 | 37.8 |
| 4 | 18.2 |
| 5 | 11.0 |
| 6 | 6.1 |

# APPENDIX A: VOLUMETRIC FLOW TEST RESULTS

**VOLUMETRIC FLOW RATE**
**LAROCHE INDUSTRIES, INC.**
**NITRIC ACID PLANT**
**12-06-90**

| Title of Run | | Run 1 | Run 2 | Run 3 |
|---|---|---|---|---|
| Static Pressure | IN. H2O | -1.70 | -1.70 | -1.70 |
| Barometric Pressure | In. Hg. | 29.70 | 29.70 | 29.70 |
| % O2 | % | 3.0 | 3.5 | 3.5 |
| % CO2 | % | 0.0 | 0.0 | 0.0 |
| Avg. Stack Temp. | DEG F | 302.5 | 284.1 | 296.4 |
| Area Of Stack | SQ. FEET | 12.566 | 12.566 | 12.566 |
| Number Of Points | | 12 | 12 | 12 |
| Avg. Sqrt. Delta P | In. H2O | 1.532 | 1.525 | 1.504 |

**RESULTS OF COMPUTATIONS**

| | | RUN 1 | RUN 2 | RUN 3 | AVERAGE |
|---|---|---|---|---|---|
| Volume of Gas Sampled | SDCF | 34.164 | 41.470 | 33.215 | 36.283 |
| Molecular Wt. Of St. Gas | LB/LB-MOLE | 28.02 | 28.11 | 28.11 | 28.08 |
| H2O Vapor In Gas Stream | PERCENT | 1.0 | 0.3 | 0.3 | 0.5 |
| Avg Stack Gas Velocity | FT/SEC | 105.5 | 103.6 | 103.0 | 104.0 |
| Volumetric Flow Rate | SDCFM | 53900 | 54600 | 53400 | 54000 |
| Volumetric Flow Rate | ACFM | 79600 | 78100 | 77700 | 78500 |

**SEAS, INC.**

# APPENDIX B: FIELD DATA SHEETS

# SANDERS ENGINEERING & ANALYTICAL SERVICES, INC.

PLANT LaRoche

SAMPLING SITE Nitric Acid Plant

DATE 12-6 RUN # 1 OPER. DR

METER BOX # D-460 IMP. BOX # _____

PROBE # _____ $C_p$ _____

GAS ANALYSIS: $CO_2$ 0

$O_2$ 3.0

$\%N_2+\%CO$ _____

METER READING:

| | | |
|---|---|---|
| FINAL | _____ | _____ |
| INITIAL | _____ | _____ |
| NET | _____ | _____ |

ACETONE WASH VOLUME, ml _____

ACETONE WASH BLANK, mg/ml _____

SCHEMATIC OF STACK

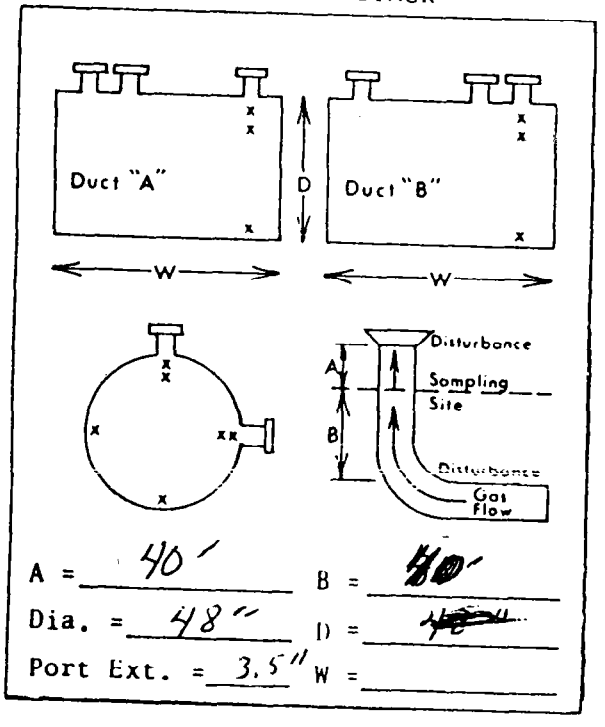


A = 40'

B = 40'

Dia. = 48"

D = ~~48"~~

Port Ext. = 3.5"

W = _____

BAROMETRIC PRESSURE 29.76 in. Hg

STATIC PRESSURE -1.7 in. $H_2O$

NOZZLE CALIBRATION - PRETEST POST TEST

_____ in. _____ in.

_____ in. _____ in.

_____ in. _____ in.

AVERAGE DIAMETER _____ in. _____ in.

PROBE HEATER SETTING _____

PROBE LINER MATERIAL _____

NOMOGRAPH VALUES: $\Delta H_a$ _____, $T_m$ _____

K _____, $\%H_2O$ _____, $P_s/P_m$ _____

$\Delta P$ ref. _____, c _____, $T_s$ _____

LEAK CHECKS

SYSTEM ~~.008~~ .25" Hg PITOT ✓ Impact

.008 CFM ✓ Static

WEIGHT OF PARTICULATE COLLECTED

| Container Number | Final Weight | Tare Weight | Weight Gain |
|---|---|---|---|
| Filter | | | |
| Container | | | |
| | | Acetone Blank | |
| | | Weight of Particulate Matter | |

VOLUME OF LIQUID WATER COLLECTED - IMPINGERS

| | Imp. 1 | Imp. 2 | Imp. 3 | Imp. 4 |
|---|---|---|---|---|
| Final | 100 | 1 | | 1444.0 |
| Initial | 100 | 0 | | 1437.5 |
| Difference | 0 | 1 | | 6.5 |
| Total Volume Liquid Collected | | | | 7.5 |

| PORT # / POINT # | TIME | GAS METER VOL. (cu.ft.) | VEL. HEAD ΔP in.$H_2O$ | ORIFICE HEAD ΔH in. $H_2O$ | TEMPERATURE °F STACK | PROBE | HOT BOX | IMP. | GAS METER IN | GAS METER OUT | VAC. in. Hg |
|---|---|---|---|---|---|---|---|---|---|---|---|
| 1-1 | | | 2.3 | | 296 | | | | | | |
| -2 | | | 2.55 | | 303 | | | | | | |
| -3 | | | 2.5 | | 305 | | | | | | |
| -4 | | | 3.4 | | 306 | | | | | | |
| -5 | | | 2.1 | | 305 | | | | | | |
| -6 | | | 1.9 | | 290 | | | | | | |
| 2-1 | | | 2.3 | | 305 | | | | | | |
| -2 | | | 2.6 | | 306 | | | | | | |
| -3 | | | 2.6 | | 308 | | | | | | |
| -4 | | | 2.2 | | 309 | | | | | | |
| -5 | | | 2.1 | | 306 | | | | | | |
| -6 | | | 1.8 | | 291 | | | | | | |
| | | | 2.34 | | 302.5 | | | | | | |
| | | | Moisture | | | | | | | | |
| | 1:25 | 235.938 | | 1.5 | 306 | | | 59 | 67 | 69 | 3 |
| | 1:35 | [illegible] | | 1.5 | 308 | | | 53 | 68 | 65 | 3 |
| | 1:46 | 250.74 | | 1.5 | 308 | | | 52 | 67 | 63 | 3 |
| | 1:55 | 256.84 | | 1.5 | 308 | | | 53 | 67 | 64 | 3 |
| | 2:05 | 262.80 | | 1.5 | 307 | | | 53 | 68 | 63 | 3 |
| | | 266.425 | | 1.5 | 307 | | | 54 | 67 | 63 | 3 |
| | | | | | | | | | | | |
| | | | | | | | | | | | |
| | | 30.502 | | 1.5 | 307.3 | | | | 66.00 | | |
| | | | | | | | | | | | |

CHECK INDICATES TEMPERATURES MEET REQUIRED LIMITS.

COMPANY LaRoche DATE 12-6-90

SITE Nitric Acid Plant RUN # 2 PAGE 2 OF 2

# SANDERS ENGINEERING & ANALYTICAL SERVICES, INC.

PLANT LaRoche - Cherokee

SAMPLING SITE Nitric Acid Plant

DATE 12-6-90 RUN # 2 OPER. _____

METER BOX # 0-460 IMP. BOX # _____

PROBE # _____ $C_p$ _____

GAS ANALYSIS: $CO_2$ 0

$O_2$ 3.5

$\%N_2 + \%CO$ _____

METER READING:

| | | |
|---|---|---|
| FINAL | | |
| INITIAL | | |
| NET | | |

ACETONE WASH VOLUME, ml _____

ACETONE WASH BLANK, mg/ml _____

SCHEMATIC OF STACK

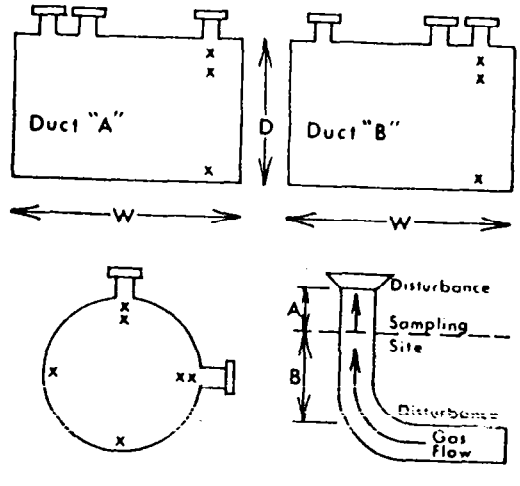


A = _____ B = _____

Dia. = _____ D = _____

Port Ext. = _____ W = _____

BAROMETRIC PRESSURE 29.70 in. Hg

STATIC PRESSURE -1.7 in. $H_2O$

NOZZLE CALIBRATION - PRETEST POST TEST

_____ in. _____ in.

_____ in. _____ in.

_____ in. _____ in.

AVERAGE DIAMETER _____ in. _____ in.

PROBE HEATER SETTING _____

PROBE LINER MATERIAL _____

NOMOGRAPH VALUES: $\Delta H_a$ _____, $T_m$ _____

K _____, $\%H_2O$ _____, $P_s/P_m$ _____

$\Delta P$ ref. _____, c _____, $T_s$ _____

LEAK CHECKS

SYSTEM ~~.010~~ .025" Hg PITOT ✓ Impact

.010 CFM ✓ Static

WEIGHT OF PARTICULATE COLLECTED

| Container Number | Final Weight | Tare Weight | Weight Gain |
|---|---|---|---|
| Filter | | | |
| Container | | | |
| | | Acetone Blank | |
| | | Weight of Particulate Matter | |

VOLUME OF LIQUID WATER COLLECTED - IMPINGERS

| | Imp. 1 | Imp. 2 | Imp. 3 | Imp. 4 |
|---|---|---|---|---|
| Final | 100 | 1 | | 1430.5 |
| Initial | 100 | 0 | | 1429.0 |
| Difference | 0 | 1 | | 1.5 |
| Total Volume Liquid Collected | | | | 2.5 |

| PORT # / POINT # | TIME | GAS METER VOL. (cu.ft.) | VEL. HEAD ΔP in.$H_2O$ | ORIFICE HEAD ΔH in. $H_2O$ | TEMPERATURE °F STACK | PROBE | HOT BOX | IMP. | GAS METER IN | GAS METER OUT | VAC. in. $H_g$ |
|---|---|---|---|---|---|---|---|---|---|---|---|
| 1-1 | | | 2.3 | | 304 | | | | | | |
| -2 | | | 2.4 | | 306 | | | | | | |
| -3 | | | 2.6 | | 307 | | | | | | |
| -4 | | | 2.4 | | 307 | | | | | | |
| -5 | | | 2.2 | | 305 | | | | | | |
| -6 | | | 1.90 | | 142 | | | | | * | |
| | | | | | | | | | | | |
| 2-1 | | | 2.3 | | 304 | | | | | | |
| | | | 2.7 | | 305 | | | | | | |
| | | | 2.6 | | 307 | | | | | | |
| | | | 2.4 | | 307 | | | | | | |
| | | | 2.2 | | 306 | | | | | | |
| | | | 1.8 | | 209 | | | | | | |
| | | | 2.3 | | 254.08 | | | | | | |
| | | Run | 1 | | Moisture | | | | | | |
| 1 | 10:45 | 198.375 | | 1.5 | 310 | | | 61 | 60 | 57 | |
| | | [redacted] | | 1.5 | 311 | | | 60 | 62 | 58 | |
| | | | | 1.5 | 311 | | | 57 | 64 | 59 | |
| | | | | 1.5 | 310 | | | 53 | 65 | 61 | |
| | 11:40 | 235.406 | | 1.5 | 311 | | | 49 | 66 | 62 | |
| | | | | | | | | | | | |
| | | | | | | | | | | | |
| | | 37.025 | | | 310.6 | | | | 61.4 | | |
| | | | | | | | | | | | |

CHECK INDICATES TEMPERATURES MEET REQUIRED LIMITS.

COMPANY Velocity + Temp DATE _____

SITE 1 RUN # _____ PAGE _____ OF _____

# SANDERS ENGINEERING & ANALYTICAL SERVICES, INC.

PLANT LaRoche Cherokee

SAMPLING SITE Nitric Acid

DATE _____ RUN # 3 OPER. BR

METER BOX # D-460 IMP. BOX # _____

PROBE # _____ $C_p$ _____

GAS ANALYSIS: $CO_2$ _____

$O_2$ 3.5

$\%N_2 + \%CO$ _____

METER READING:

| | | |
|---|---|---|
| FINAL | | |
| INITIAL | | |
| NET | | |

ACETONE WASH VOLUME, ml _____

ACETONE WASH BLANK, mg/ml _____

SCHEMATIC OF STACK

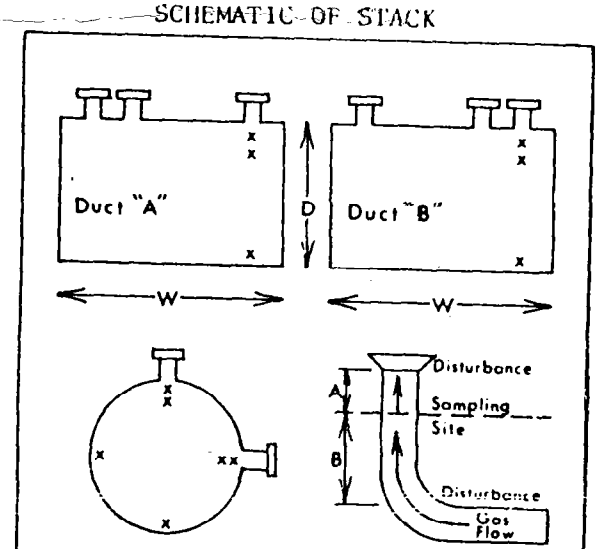


A = _____ B = _____

Dia. = _____ D = _____

Port Ext. = _____ W = _____

BAROMETRIC PRESSURE 29.70 in. Hg

STATIC PRESSURE -1.7 in. $H_2O$

NOZZLE CALIBRATION - PRETEST POST TEST

_____ in. _____ in.

_____ in. _____ in.

_____ in. _____ in.

AVERAGE DIAMETER _____ in. _____ in.

PROBE HEATER SETTING _____

PROBE LINER MATERIAL _____

NOMOGRAPH VALUES: $\Delta H_a$ _____, $T_m$ _____

K _____, $\%H_2O$ _____, $P_s/P_m$ _____

$\Delta P$ ref. _____, c _____, $T_s$ _____

LEAK CHECKS

SYSTEM 25 " Hg PITOT ✓ Impact

.008 CFM ✓ Static

WEIGHT OF PARTICULATE COLLECTED

| Container Number | Final Weight | Tare Weight | Weight Gain |
|---|---|---|---|
| Filter | | | |
| Container | | | |
| | | Acetone Blank | |
| | | Weight of Particulate Matter | |

VOLUME OF LIQUID WATER COLLECTED - IMPINGERS

| | Imp. 1 | Imp. 2 | Imp. 3 | Imp. 4 |
|---|---|---|---|---|
| Final | 100 | 0 | | 1363.0 |
| Initial | 100 | -0- | | 1363.0 |
| Difference | | | | |
| Total Volume Liquid Collected | | | | |

| PORT # / POINT # | TIME | GAS METER VOL. (cu.ft.) | VEL. HEAD ΔP in.$H_2O$ | ORIFICE HEAD ΔH in. $H_2O$ | TEMPERATURE °F STACK | PROBE | HOT BOX | IMP. | GAS METER IN | GAS METER OUT | VAC. in. $H_g$ |
|---|---|---|---|---|---|---|---|---|---|---|---|
| 1-1 | | | 2.3 | | 307 | | | | | | |
| -2 | | | 2.4 | | 307 | | | | | | |
| -3 | | | 2.5 | | 309 | | | | | | |
| -4 | | | 2.2 | | 308 | | | | | | |
| -5 | | | 2.1 | | 306 | | | | | | |
| -6 | | | 2.1 | | 297 | | | | | | |
| 2-1 | | | 2.4 | | 306 | | | | | | |
| -2 | | | 2.5 | | 306 | | | | | | |
| -3 | | | 2.5 | | 309 | | | | | | |
| -4 | | | 2.2 | | 307 | | | | | | |
| -5 | | | 2.2 | | 305 | | | | | | |
| -6 | | | 1.8 | | 202 | | | | | | |
| | | | 2.27 | | 266.42 | | | | | | |
| | | | | | | | | | | | |
| | 2:50 | 267.[illegible] | 1.5 | | 307 | | | 58 | 64 | 61 | 5 |
| | 3:05 | 277.80 | 1.5 | | 306 | | | 55 | 65 | 61 | 5 |
| | 3:20 | 287.46 | 1.6 | | 309 | | | 55 | 65 | 62 | 6 |
| | 3:35 | 297.04 | 1.45 | | 307 | | | 56 | 64 | 60 | 6 |
| | | | | | | | | | | | |
| | | | | | | | | | | | |
| | | | 1.488 | | 307.75 | | | | 62.75 | | |
| | | 29.655 | | | | | | | | | |
| | | | | | | | | | | | |
| | | | | | | | | | | | |

CHECK INDICATES TEMPERATURES MEET REQUIRED LIMITS.

COMPANY LaRoche DATE 12-6-90

SITE Nitric Acid Plant RUN # 3 PAGE 2 OF 2

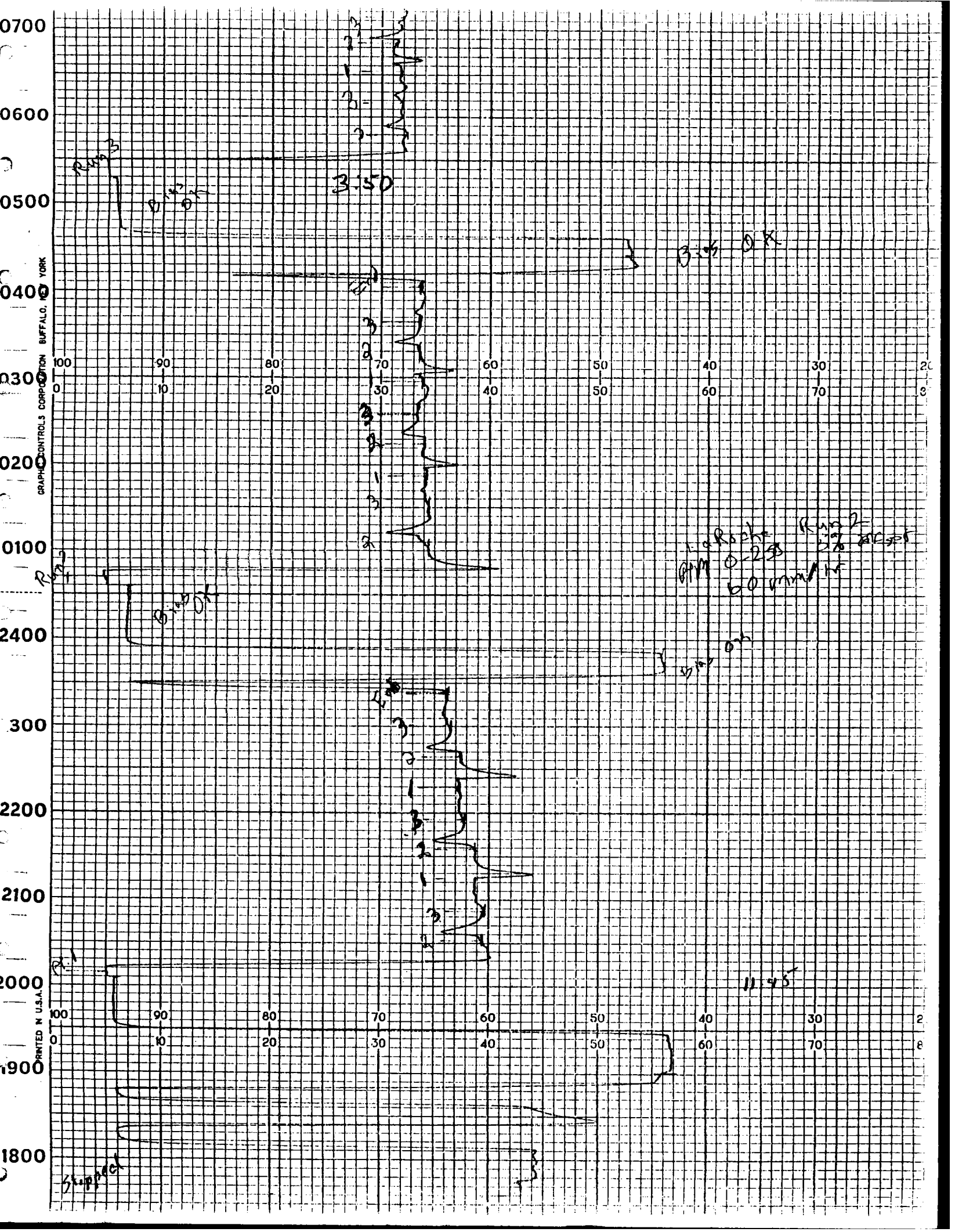

0700
0600
0500
0400
0300
0200
0100
2400
300
2200
2100
2000
1900
1800
GRAPHIC CONTROLS CORPORATION BUFFALO, NEW YORK
PRINTED IN U.S.A.
100 90 80 70 60 50 40 30
0 10 20 30 40 50 60 70
3:50
Run 3
Bias OK
Bias OK
Run 2
Bias OK
Bias OK
La Roche
Run 2
60 mm/hr
11:45
Stopped

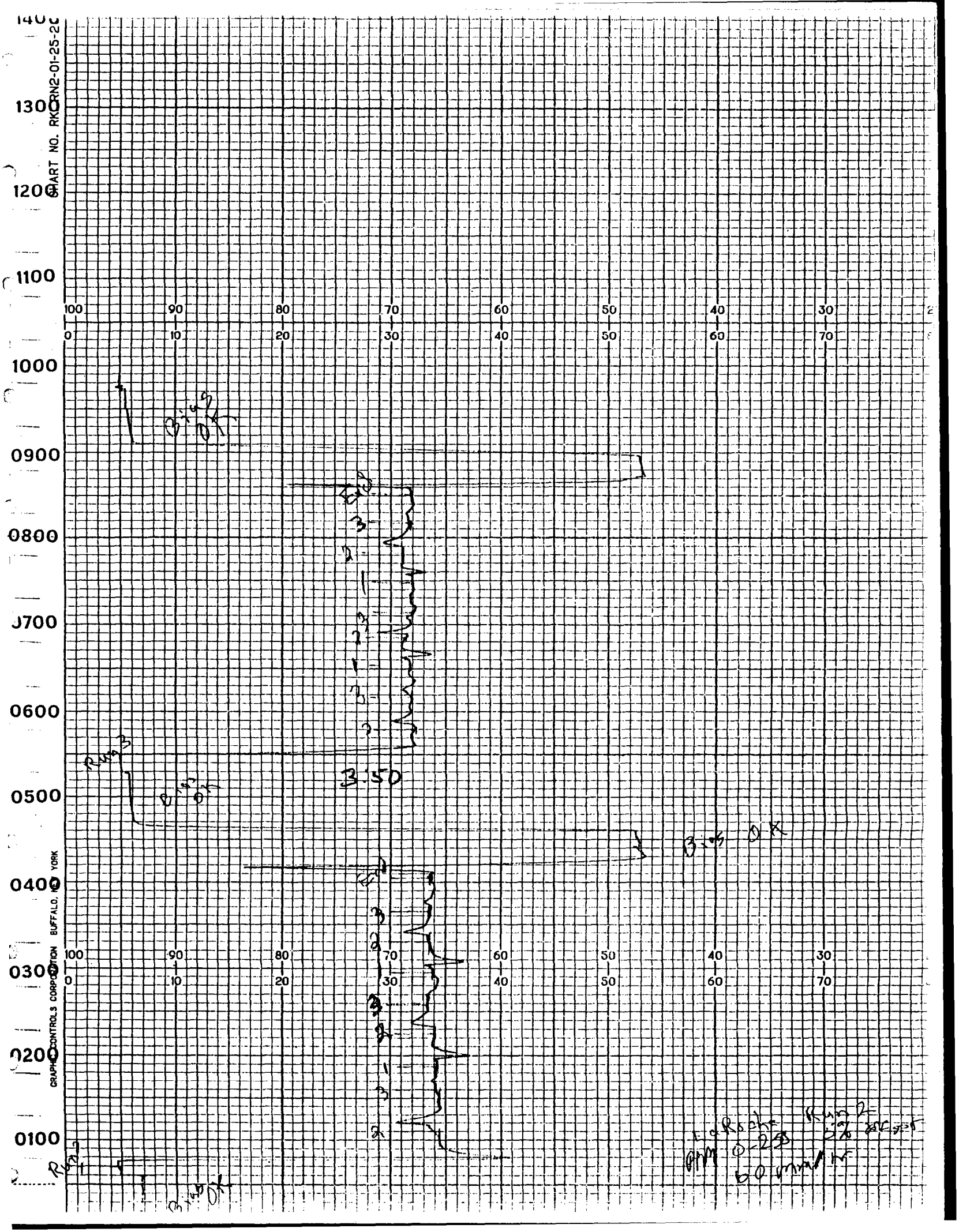

CHART NO. RKORN2-01-25-20
GRAPHIC CONTROLS CORPORATION BUFFALO, NEW YORK
1400
1300
1200
1100
1000
0900
0800
0700
0600
0500
0400
0300
0200
0100
100 90 80 70 60 50 40 30
0 10 20 30 40 50 60 70
Bias OK
Run 3
3:50
Bias OK
Run 2

# APPENDIX C: CALIBRATIONS

INITIAL

METER CALIBRATION FORM - DGM

DATE 6-18-90 Box No. D-460

Ref. DGM 1044456 Calibrated By Jack Covington

| | | | | | |
|---|---|---|---|---|---|
| RUN # | 1 | 2 | 3 | 4 | 5 |
| DELTA H (DGM) | 0.5 | 1 | 2 | 3 | 4 |
| Y (Ref. DGM) | 1 | 1 | 1 | 1 | 1 |
| Reference DGM Gas Vol. Initial | 515.6 | 523.493 | 530.097 | 542.743 | 548.612 |
| Gas Vol. Final | 520.943 | 529.66 | 536.84 | 548.403 | 553.565 |
| Meter Box DGM Gas Vol. Initial | 959.045 | 967.152 | 973.847 | 986.955 | 992.997 |
| Gas Vol. Final | 964.535 | 973.512 | 980.995 | 992.882 | 998.178 |
| Reference DGM Temp. | Avg. | Avg. | Avg. | Avg. | Avg. |
| Deg F Initial | 77 | 78 | 79 | 80 | 82 |
| Deg F Final | 78 | 79 | 80 | 81 | 82 |
| Meter Box DGM Temp. Initial In | 83 | 91 | 96 | 101 | 103 |
| Temp. Initial Out | 79 | 88 | 91 | 96 | 98 |
| Temp. Final In | 87 | 96 | 100 | 106 | 107 |
| Temp. Final Out | 83 | 91 | 94 | 99 | 100 |
| P Bar IN. Hg | 30.25 | 30.25 | 30.25 | 30.25 | 30.25 |
| Time | 814 | 690 | 523 | 357 | 276 |
| Meter Calibration Factor (Y) | 0.982 | 0.991 | 0.966 | 0.983 | 0.982 |
| Qm (C.F.M.) | 0.391 | 0.532 | 0.766 | 0.94 | 1.061 |
| Km (Std Pressure) | 0.704 | 0.671 | 0.682 | 0.681 | 0.666 |
| DELTA Ha | 1.804 | 1.923 | 1.845 | 1.821 | 1.9 |

| | |
|---|---|
| Average Y (Meter Calibration Factor | 0.981 |
| Qm @ ^H = 1.0 (Cubic Feet Per Minute) | 0.532 |
| Average Km (Standard Pressure) | 0.681 |
| Average DELTA Ha of Orifice | 1.859 |

# FINAL
# METER CALIBRATION FORM - DGM

DATE: 12-10-90 Box No. D-460

Ref. DGM Ser. # 1044456 Calibrated By DUANE BIELLING

| RUN # | 1 | 2 | 3 |
|---|---|---|---|
| DELTA H (DGM) | 1.5 | 1.5 | 1.5 |
| Y (Ref. DGM) | 1.000 | 1.000 | 1.000 |
| Reference DGM | | | |
| Gas Vol. Initial | 415.007 | 420.606 | 425.982 |
| Gas Vol. Final | 420.606 | 425.982 | 431.280 |
| Meter Box DGM | | | |
| Gas Vol. Initial | 305.203 | 310.758 | 316.150 |
| Gas Vol. Final | 310.758 | 316.150 | 321.491 |
| Reference DGM Temp. | Avg. | Avg. | Avg. |
| Deg F Initial | 50 | 50 | 51 |
| Deg F Final | 50 | 52 | 52 |
| Meter Box DGM | | | |
| Temp. Initial In | 49 | 52 | 55 |
| Temp. Initial Out | 45 | 49 | 53 |
| Temp. Final In | 53 | 56 | 59 |
| Temp. Final Out | 49 | 52 | 56 |
| P Bar IN. Hg | 30.37 | 30.37 | 30.37 |
| Time (sec.) | 480 | 480 | 480 |
| Meter Calibration Factor (Y) | 1.002 | 0.996 | 0.997 |
| Qm (C.F.M.) | 0.736 | 0.705 | 0.694 |
| Km (Std Pressure) | 0.791 | 0.756 | 0.742 |
| DELTA Ha | 1.64 | 1.77 | 1.82 |

| | |
|---|---|
| Average Y (Meter Calibration Factor) | 0.998 |
| Initial Y (Meter Calibration Factor) | 0.981 |
| Percent Error | -1.73% |
| Average Km (Standard Pressure) | 0.763 |
| Average DELTA Ha of Orifice | 1.74 |

## MAGNEHELIC CALIBRATION

| BOX # | D-460 | C-133 | C-173 | C-175 |
|---|---|---|---|---|
| SER. NO. | 91127WW137 | 91126AM91 | R20208A617 | R01126YC2 |
| RANGE | 0-2 | 0-2 | 0-2 | 0-2 |
| REFERENCE READING | FIELD DEVICE READING | | | |
| 0.00 | 0.00 | 0.00 | 0.00 | 0.00 |
| 0.50 | 0.47 | 0.48 | 0.48 | 0.49 |
| 1.00 | 1.00 | 1.00 | 0.98 | 0.95 |
| 1.75 | 1.67 | 1.75 | 1.77 | 1.75 |

DATE: 06-18-90

SIGNATURE: Duane R Billing

# MAGEHELIC CALIBRATION

| SER. NO. | 10720-AB68 | R1061-6AG48 | R5031-SEB76 | R1062-9JA82 | R1051-3MR42 | R1071-JA8 |
|---|---|---|---|---|---|---|
| RANGE | 0-.25 | 0-.50 | 0-2 | 0-5 | 0-10 | 0-25 |
| REFERENCE READING | BOX #1 | | FIELD DEVICE READING | | | |
| 0.00 | 0.00 | 0.00 | 0.00 | 0.00 | 0.00 | 0.00 |
| 0.05 | 0.06 | | | | | |
| 0.10 | 0.105 | 0.11 | | | | |
| 0.200 | 0.210 | 0.211 | | | | |
| 0.400 | | 0.400 | | | | |
| 0.500 | | | 0.450 | | | |
| 1.000 | | | 1.000 | 1.050 | | |
| 1.500 | | | 1.500 | | | |
| 2.000 | | | | 2.010 | 2.000 | |
| 3.500 | | | | 3.490 | | |
| 5.000 | | | | | 4.970 | 5.000 |
| 8.00 | | | | | 7.95 | |
| 10.00 | | | | | | 10.00 |
| 20.00 | | | | | | 19.90 |

DATE: 05-26-90

SIGNATURE: Scott Sanders

| MAGNEHELIC CALIBRATION | | | | | | | |
|---|---|---|---|---|---|---|---|
| Ser. No. | 10819-DR2 | R1090-2AG18 | R50315-EB93 | R1062-9TA87 | 30830-AM79 | R1072-2MC5 | |
| Range | 0-.25 | 0-.5 | 0-2 | 0-5 | 0-10 | 0-25 | |
| Reference Reading | Box #2 | Field Device Reading | | | | | |
| 0.00 | 0.00 | 0.00 | 0.00 | 0.00 | 0.00 | 0.00 | |
| 0.05 | 0.05 | | | | | | |
| 0.10 | 0.11 | 0.11 | | | | | |
| 0.20 | 0.20 | 0.21 | | | | | |
| 0.40 | | 0.41 | | | | | |
| 0.50 | | | 0.54 | | | | |
| 1.00 | | | 1.04 | 1.10 | | | |
| 1.50 | | | 1.54 | | | | |
| 2.00 | | | | 2.10 | 2.00 | | |
| 3.50 | | | | 3.60 | | | |
| 5.00 | | | | | 4.90 | 5.25 | |
| 8.00 | | | | | 7.90 | | |
| 10.00 | | | | | | 10.00 | |
| 20.00 | | | | | | 19.60 | |

**Date:** 10-26-90 **Signature:** Duane A Billing

# TEMPERATURE CALIBRATIONS - DEGREES FAHRENHEIT

| REFERENCE DEVICE READING* | 0 DEG. F | 210 DEG. | 420 DEG. | 630 DEG. | 840 DEG. | 1050 DEG. | 1260 DEG. | 1470 DEG. | 1680 DEG. | 1900 DEG. |
|---|---|---|---|---|---|---|---|---|---|---|
| METER BOX #1 C-133 11580 | 1 | 211 | 419 | 629 | 839 | 1052 | 1264 | 1472 | 1685 | 1911 |
| METER BOX #2 C-175 15962 | 0 | 208 | 416 | 625 | 835 | 1047 | 1258 | 1466 | 1683 | 1910 |
| METER BOX #3 C-173 S11-24 | 2 | 211 | 418 | 628 | 835 | 1046 | 1256 | 1462 | 1676 | 1902 |
| METER BOX #4 D-460 15751 | 0 | 209 | 418 | 628 | 840 | 1052 | 1265 | 1473 | 1687 | 1915 |
| 2879 | 0 | 210 | 421 | 630 | 839 | 1050 | 1260 | 1470 | 1680 | 1900 |
| PORTABLE THERMOCOUPLE # 1 249662.00 | -1 | 209 | 418 | 631 | 838 | 1048 | 1258 | 1469 | 1679 | 1899 |
| PORTABLE THERMOCOUPLE # 2 - T-05792 | 0 | 210 | 418 | 629 | 846 | 1065 | 1283 | 1497 | 1705 | 1916 |

DATE: 06-18-90

SIGNATURE: Dean Reddick

* Reference Device is an Omega Engineering CL505-A calibrated reference thermocouple-potentiometer system.

The Pitot used was within the following geometric specifications:

$C_p = 0.84$

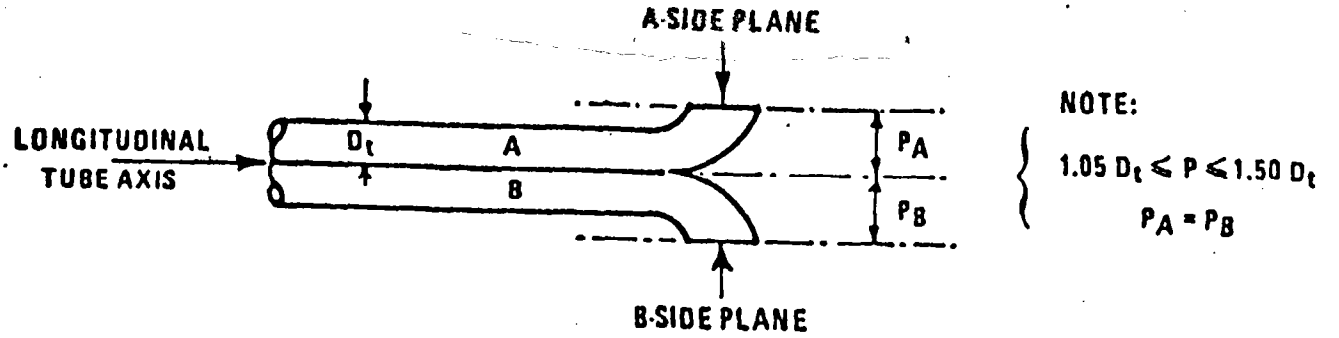


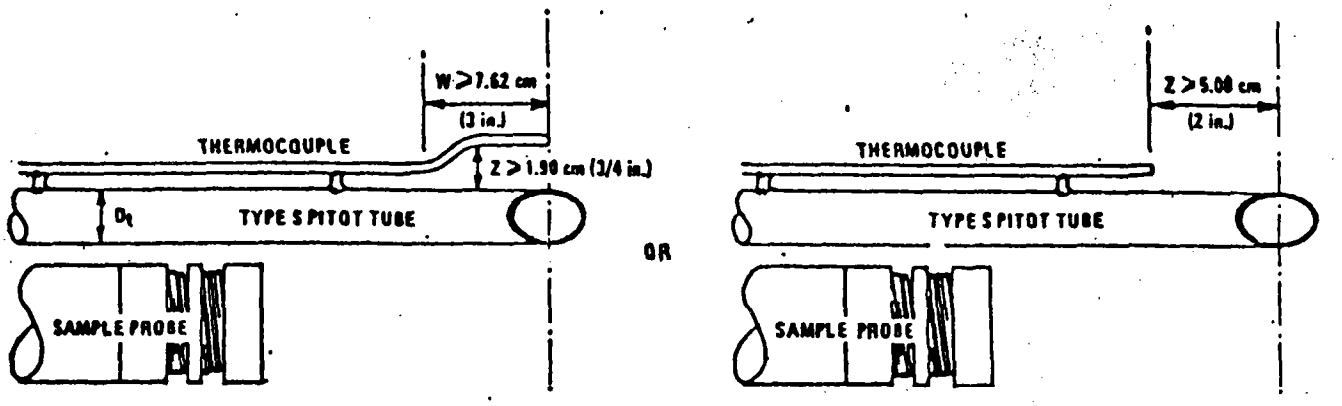


Figure 2-7. Proper thermocouple placement to prevent interference; $D_t$ between 0.48 and 0.95 cm (3/16 and 3/8 in.).

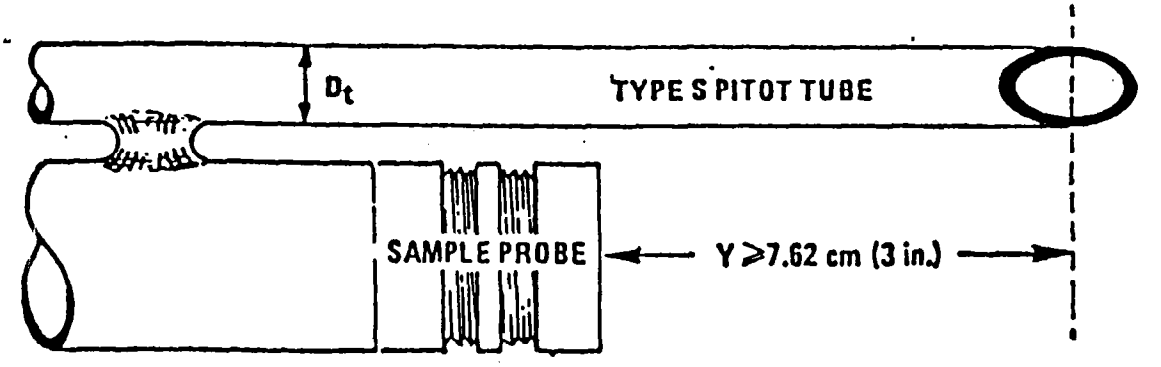


Figure 2-8. Minimum pitot-sample probe separation needed to prevent interference; $D_t$ between 0.48 and 0.95 cm (3/16 and 3/8 in.).

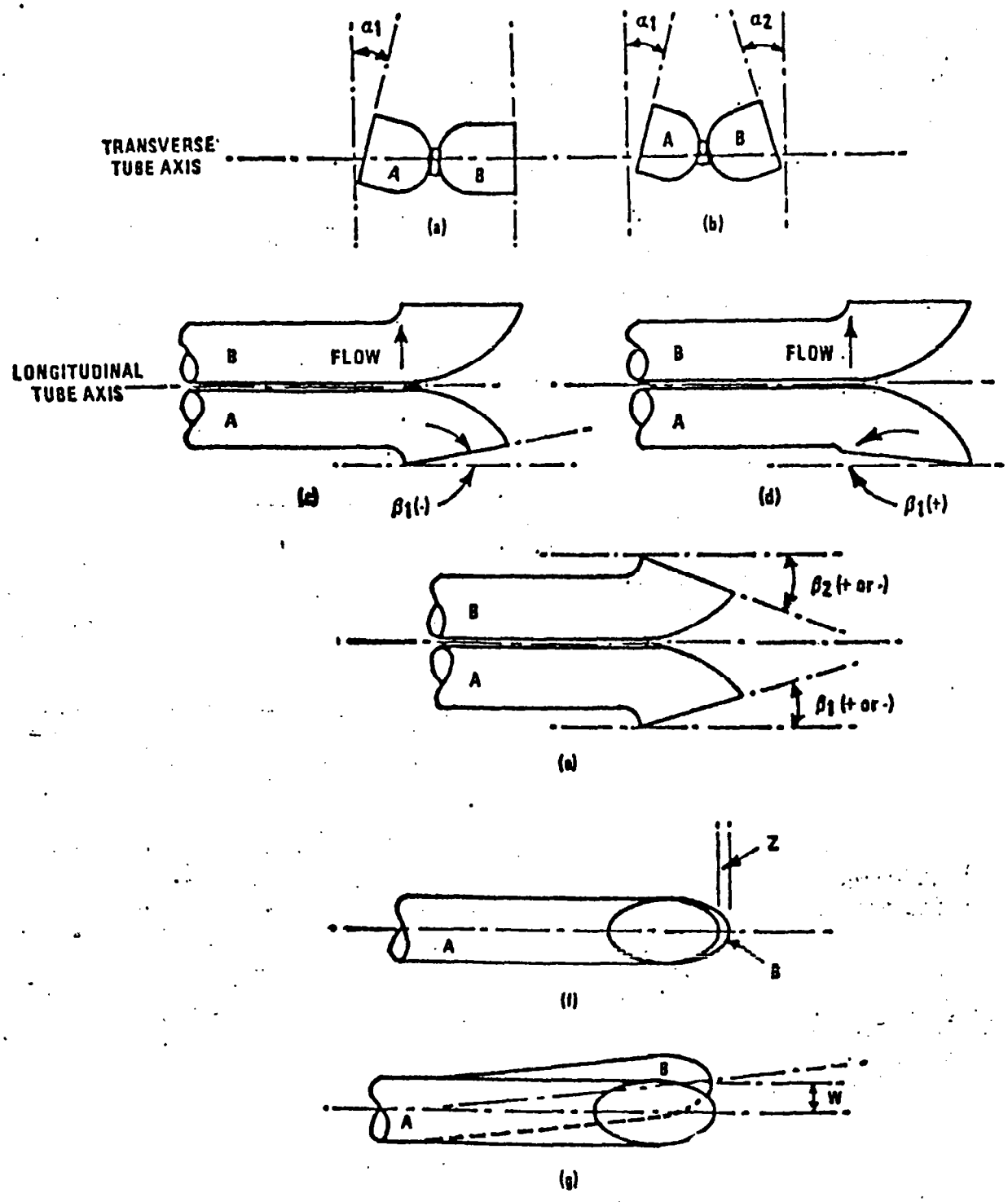


Types of face-opening misalignment that can result from field use or improper construction of Type S pitot tubes. These will not affect the baseline value of $\bar{C}p(s)$ so long as $\alpha_1$ and $\alpha_2 < 10^o$, $\beta_1$ and $\beta_2 < 5^o$. $z < 0.32$ cm (1/8 in.) and $w <$ 0.08 cm (1/32 in.) (citation 11 in Section 6).

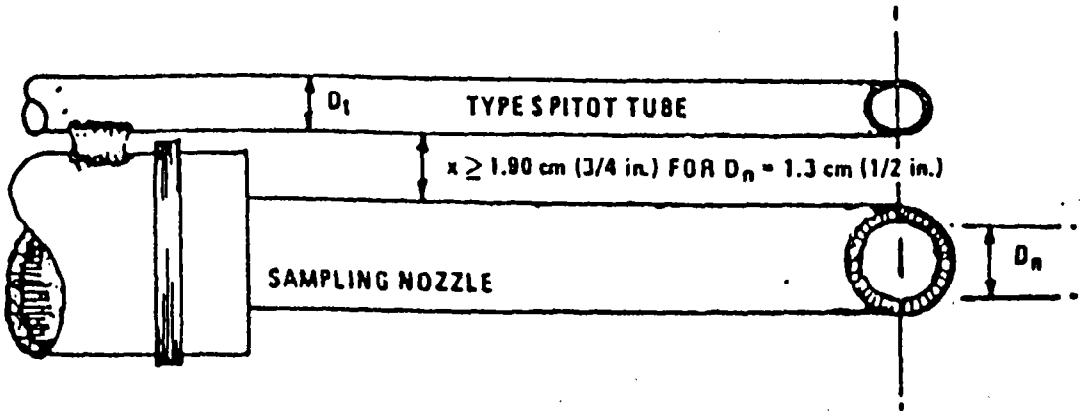


A. BOTTOM VIEW; SHOWING MINIMUM PITOT-NOZZLE SEPARATION.

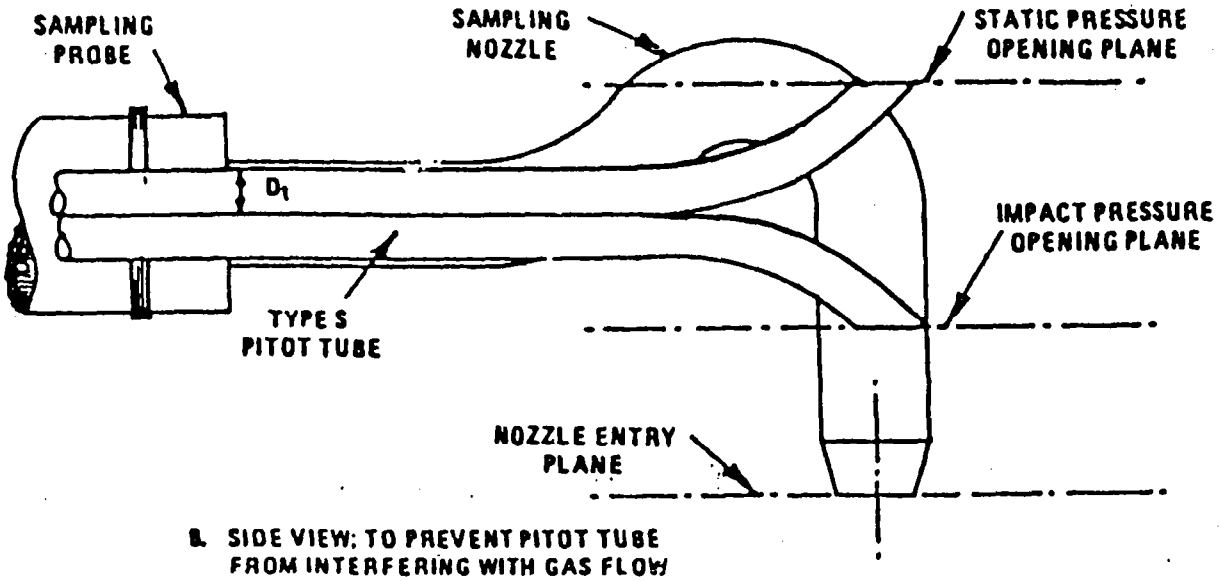


B. SIDE VIEW; TO PREVENT PITOT TUBE FROM INTERFERING WITH GAS FLOW STREAMLINES APPROACHING THE NOZZLE, THE IMPACT PRESSURE OPENING PLANE OF THE PITOT TUBE SHALL BE EVEN WITH OR ABOVE THE NOZZLE ENTRY PLANE.

Proper pitot tube - sampling nozzle configuration to prevent aerodynamic interference; buttonhook - type nozzle; centers of nozzle and pitot opening aligned; $D_t$ between 0.48 and 0.95 cm (3/16 and 3/8 in.).

# APPENDIX D: COMMUNICATIONS

314-7514110

**LaRoche Industries Inc.**

**Interorganization Correspondence**

Date: June 26, 1990

To: J. W. Cramer
S. B. Mitchell
G. E. Webb

From: L. R. Flynn

Subject: Parameters for the Start-up Boiler and Nitric Acid Plants

C: HEH JPC DHA

Below is a list of the parameters for the start-up boiler and the nitric acid plants.

Permit Number
701-0013-X024 44MMBTU/HR Start-up Boiler

Operation of the boiler shall be limited to 40.02 million standard cubic feet of natural gas fired in any 12 consecutive months. Daily records of total natural gas usage and steam production data with monthly summaries shall be maintained for the boiler and be available for inspection upon request for a period of 3 years.

Permit Number
701-0013-X023 Nitric Acid Plant - Plant No. 2
See attached permit. (600 TPD)

The maximum NOx emission limit is 3.0 pounds/ton of 100% nitric acid. This translates to a maximum legal limit of 210 PPM emission concentration of NOx. We will have to submit a quarterly report to ADEM showing number of hours of operation, total hours plant exceeded allowable emissions during periods of start-up and shutdown, total hours plant exceeded allowable emissions while operating, total hours analyzer operated while plant was operating, number of days zero drift in the analyzer exceeded 2% and total days (24 hrs.) span drift exceeded 2.5%. As you can see from the above, the analyzer will have to be recalibrated each day and records kept. When we do the initial compliance test of the plant, I am sure ADEM will make it known a little more specifically what we must do in keeping records. I am sure this will apply to both plants.

Permit Number
701-0013-X001 Nitric Acid Plant - Plant No. 1
See attached permit.

If you have any questions, please let me know.

Larry R. Flynn

LEF:mjd

Copies to:

NEW NITRIC ACID PLANT

LAROCHE INDUSTRIES, INC.

Permit No. 701-0013-X023

1. This permit is issued on the basis of Rules and Regulations existing on the date of issuance. In the event additional Rules and Regulations are adopted, it shall be the permit holder's responsibility to comply with such rules.

2. This permit is not transferable. Upon sale or legal transfer, the new owner or operator must apply for a permit within 30 days.

3. A new permit application must be made for new sources, replacements, alterations or design changes which may result in the issuance of, or an increase in the issuance of, air contaminants, or the use of which may eliminate or reduce or control the issuance of air contaminants.

4. Each point of emission will be provided with sampling ports, ladders, platforms, and other safety equipment to facilitate testing performed in accordance with procedures established by Part 60 of Title 40 of the Code of Federal Regulations, as the same may be amended or revised.

5. In case of shutdown of air pollution control equipment for scheduled maintenance for a period greater than 2 hours, the intent to shut down shall be reported to the Department at least 24 hours prior to the planned shutdown.

6. In the event there is a breakdown of equipment in such a manner as to cause increased emission of air contaminants for a period greater than 2 hours, the person responsible for such equipment shall notify the Department within an additional 24 hours and provide a statement giving all pertinent facts, including the duration of the breakdown. The Department shall be notified when the breakdown has been corrected.

7. All air pollution control devices and capture systems for which this permit is issued shall be maintained and operated at all times in a manner so as to minimize the emissions of air contaminants. Procedures for ensuring that the above equipment is properly operated and maintained so as to minimize the emission of air contaminants shall be established.

8. This permit expires and the application is cancelled if construction has not begun within 24 months of the date of issuance of the permit.

9. On completion of construction of the device for which this permit is issued, notification of the fact is to be given to the Chief of the Air Division at least 10 days in advance of planned operation of the unit. Authorization to operate the unit must be received from the Chief of the Air Division. Failure to notify the Chief of the Air Division of completion of construction and/or operation without authorization could result in revocation of this permit.

Permit No. 701-0013-X023

10. Prior to a date to be specified by the Chief of the Air Division in the authorization to operate, emission tests are to be conducted by persons familiar with and using the EPA Sampling Train and Test Procedure as described in the Code of Federal Regulations, Title 40, Part 60, for the following pollutants. Written tests results are to be reported to the Department within 15 working days of completion of testing.

    Particulates ( ) Carbon Monoxide ( )
    Sulfur Dioxide ( ) Nitrogen Oxides (X)
    Volatile Organic Compounds ( )

11. Submission of other reports regarding monitoring records, fuel analyses, operating rates, and equipment malfunctions may be required as authorized in the Department's air pollution control rules and regulations. The Department may require stack emission testing at any time.

12. Additions and revisions to the conditions of this Permit will be made, if necessary, to ensure that the Department's air pollution control rules and regulations are not violated.

13. Nothing in this permit or conditions thereto shall negate any authority granted to the Department pursuant to the Alabama Environmental Management Act or regulations issued thereunder.

14. The Department must be notified in writing at least 10 working days in advance of all emission tests to be conducted and submitted as proof of compliance with the Department's air pollution control rules and regulations.

    To avoid problems concerning testing methods and procedures, the following shall be included with the notification letter:

    (1) The date the test crew is expected to arrive, the date and time anticipated of the start of the first run, how many and which sources are to be tested, and the names of the persons and/or testing company that will conduct the tests.

    (2) A complete description of each sampling train to be used, including type of media used in determining gas stream components, type of probe lining, type of filter media, and probe cleaning method and solvent to be used (if test procedure requires probe cleaning).

    (3) A description of the process(es) to be tested, including the feed rate, any operating parameter used to control or influence the operations, and the rated capacity.

    (4) A sketch or sketches showing sampling point locations and their relative positions to the nearest upstream and downstream gas flow disturbances.

A pretest meeting may be held at the request of the source owner or the Department. The necessity for such a meeting and the required attendees will be determined on a case-by-case basis.

All test reports must be submitted to the Department within 15 days of the actual completion of the test, unless an extension of time is specifically approved by the Department.

15. All the original data charts, performance evaluations, calibration checks, adjustment and maintenance records and other information regarding monitoring system(s) will be maintained in a permanent form suitable for inspection. The file shall be retained for at least two years following the date of such measurements, maintenance, reports and records.

16. This unit is subject to the federal New Source Performance Standards (NSPS) as listed in 40 CFR, Subpart G - Standards of Performance for Nitric Acid Plants.

17. Use of this nitric acid plant shall be limited to 8,640 hours in any 12 consecutive months. A summary of operations data shall be submitted with each quarterly excess emissions report.

18. The current permit for Nitric Acid Plant No. 1, Permit No. 701-0013-Z001, shall expire upon completion of the construction of this unit. At the time construction of this unit is completed revised Permit No. 701-0013-X001 will become effective.

August 10, 1989
Date

DAILY PRODUCTION AND INVENTORY REPORT

AS OF 12-07-90

| ON STREAM | PRODUCTION | DAILY ACTUAL | MTD ACTUAL | MTD FCST. | MONTHLY FCST. |
|---|---|---|---|---|---|
| 24-24 | AMMONIA | 520 | | | |
| 0 | NITRIC ACID (OLD) | | | | |
| 24 | NITRIC ACID (NEW) | 540 | tons | | |
| 24 | 83% SOL | 770 | | | |
| 24 | UREA | 264 | | | |
| 24 | UAN | 620 | | | |
| 8 | ANA | 96 | | | |
| 24 | PRILL- HD | 316 | | | |

| SHIPMENTS | | IPG | OTHERS | | | |
|---|---|---|---|---|---|---|
| AMMONIA | | | | TO DATE AMMONIA(TVA) | | |
| NITRIC ACID | | | | | | |
| 83% SOL | 8 TRUCKS | | | | | |
| UREA | TRUCKS | | | UREA 100%(TVA) | | |
| UAN | 1 TRUCKS | | | | | |
| ANA | TRUCKS | | | | | |
| ATS | TRUCKS | | | | | |
| UANS | TRUCKS | | | | | |
| PRILL- HD | | RAIL | TRUCK | | | |
| BAG | | | | | | |
| BULK | | | | | | |

BARGES _____ GRADE _____ TOTAL TONS _____

| ACTUAL INVENTORIES | | | | | ACTUAL INV. |
|---|---|---|---|---|---|
| TANK C-GRADE | 1534 | | | | |
| TANK R-GRADE | 1026 | | | | |
| CARS AQUA | | | | | |
| CARS C-GRADE | 81 | | | | |
| CARS R-GRADE | 482 | | | | |
| TOTAL NH3 | | | | | |
| 83% SOLS | 2627 | | | | |
| ATS | | | | | |
| PRILLS BAG | 2073 | | | | |
| PRILLS BULK | 1827 | | | | |
| SURGE | 104 | | | | |
| FINES | 89 | | | | |
| UAN SOLS 32% | 6178 | | | | |

12-6-90
200
180
160
140
120
100
80
60
40
20
0