6.18 Ammonium Sulfate

S8.4 BR CH.4
H8

From the TRA, J.R. Simplot produced 7.326 tons/hr or 64 k tons/yr.

Note: This is a reference cited in *AP 42, Compilation of Air Pollutant Emission Factors, Volume I Stationary Point and Area Sources.* AP42 is located on the EPA web site at www.epa.gov/ttn/chief/ap42/

The file name refers to the reference number, the AP42 chapter and section. The file name "ref02_c01s02.pdf" would mean the reference is from AP42 chapter 1 section 2. The reference may be from a previous version of the section and no longer cited. The primary source should always be checked.

APPENDIX 1 - RESULTS AND EXAMPLE CALCULATIONS

PLANT NAME: J. R. Simplot Company

LOCATION: Pocatello, ID, Hwy 30 W, 3 Miles North of City

SOURCE SAMPLED: Ammonium Sulfate Plant

TESTING COMPANY (IF OTHER THAN PLANT ENVIRONMENTAL PERSONNEL):

CERTIFICATION:

1. Test Team Leader:

I hereby certify that the test detailed in this report was accomplished in conformance with IDAPA 16.01.1010 (Rules and Regulations for the Control of Air Pollution in Idaho, Sampling and Analytical Procedures) and the procedures Manual for Air Pollution Control. The results submitted herein are accurate and true to the best of my knowledge.

NAME (print): Dennis C. Bowman

SIGNATURE: Dennis C Bowman DATE: 5/4/90

TITLE: Environemontal Monitoring Technician

AFFILIATION: Plant Environmental <x> Outside Firm < > (see above).

2. Test Team Report Reviewer.

I hereby certify that I have reviewed this report and find it to be true and accurate, and in conformance with IDAPA 16.01.1010 (Rules and Regulations for the Control of Air Pollution in Idaho, Sampling and Analytical Procedures) and the Procedures Manual for Air Pollution Control to the best of my knowledge.

NAME (print): Norman F. Self

SIGNATURE: Norman Self DATE: 5/4/90

TITLE: Environmoental Control Supervisor

AFFILIATION: Plant Environmental <x> Outside Firm < > (see above).

INTRODUCTION==========

1. If test purpose was for air permit compliance monitoring, indicate <x> and go to the next section; otherwise explain: _____

2. For the source named on cover page, give test location(s), and describe type of process. Location(s): (1) Dryer venturi scrubber fan outlet; (2) cooler cyclone fan outlet.

Process: Production of ammonium sulfate fertilizer 21-0-0. Reaction, crystallization, drying, cooling and conveying.

3. List test dates: February 14, 15, 20, 21 and 22, 1990

4. List pollutants tested: Particulate from dryer and cooler

5. List EPA test methods used: 40 CFR, Part 60, Appendix A, Method 5; 40 CFR, Part 60, Appendix A, Method 9

6. Were there any deviations from the above methods? Yes < > No <x> If yes, list Appendix number where deviations are explained: _____

7. Was observer(s) present? Yes < > No <x> If yes, give name(s) and affiliation(s): _____

8. List other information as needed: _____

SUMMARY OF RESULTS==========

1. **List emission results in units of standard for each location specified in INTRODUCTION, Section 1, and for each pollutant specified in Section 4.**

Dryer Stack:	Cooler Stack:
02-14-90 Particulate = .28 lb/hr	02-20-90 Particulate = 1.7 lb/hr
02-14-90 Particulate = .22 lb/hr	02-21-90 Particulate = 1.7 lb/hr
02-15-90 Particulate = .35 lb/hr	02-22-90 Particulate = 1.01 lb/hr

Result Totals/Averages as Applicable: Average from dryer = 0.28 lb/hr. Average from cooler = 1.47 lb/hr. Total particulate for Ammonium Sulfate = 1.75 lb/hr.

2. **List process data as related to compliance determination:** No process data relates to determination. Plant was operated at or near full production during all tests.

3. **List permitted emission levels for this source:** Total particulate = 5.0 lb/hr.

4. **Visible emission summary for each source listed in Section 1 above:** Visible emission evaluation performed on 2-13-90 by Norman F. Self. Cooler: Range = 0%-15%, Average = 6%. Dryer: Range = 0.5%, Average = <1%, VE form in Appendix 2.

5. **Quality assurance procedures are listed in Appendix 6.**

6. **Discussion of errors:**

SOURCE OPERATION==========

1. **Description of Process and Control Devices:** Ammonia is reacted with sulfuric acid in a crystallizer. The system is a continuous feed reactor with a slurry being withdrawn from the bottom of the reactor. The NH3 feed to the reactor is 3,225 lb/hr (10.6 gal/min) and the 93% sulfuric acid feed is 10,000 lb/hr (10.9 gal/min). The solution or mother liquor from the reactor is recirculated at 1,080 gal/min at a specific gravity of 1.25 to allow crystal growth.

A purge of 40 to 80 gal/min is taken from the bottom of the crystallizer and centrifuged to recover crystal ammonium sulfate. Filtrate is returned to the surge tank and reintroduced to the crystallizer as seed crystals.

Centrifuge cake is dried in a rotary dryer and transferred by a bucket elevator to the screens and then to storage. Fines, minus 20 mesh, are returned to the crystallizer dump tank for further crystal growth.

Particulate matter emissions from the dryer are controlled by a Venturi scrubber. The scrubber is an induced spray injector design, with a design pressure of 10 to 15 inches.

2. **There is no Process and Control Equipment Flow Diagram at the present time.**

3. **List process and control device operating parameters during test. If these parameters are out of the range of normal operating conditions, explain the difference:** The operator monitors flows of ammonia, sulfuric acid, Ammsox scrubber liquor makeup water as can be seen from daily log sheet in Appendix 4. Control device parameters at present are only the dryer fan amps. Cooler fan amps are not noted on the log sheet. Pressure drop across the Venturi scrubber is not monitored. None of the noted parameters are out of normal operating ranges.

4. **Are raw materials and products during testing the same as those during normal operations? Yes <x> No < > If No, explain the differences:** _____

5. **Were there process startups, shutdowns or other operational changes during the tests? Yes < > No <x> If Yes, explain these changes and times of start and stop:** _____

SAMPLING AND ANALYSIS PROCEDURES==========

1. See Appendix 8 for sample port locations. The stack diameter is 20 inches for both ducts.

2. The sampling point description is tabulated in Appendix 8.

3. The sampling train(s) is depicted in Appendix 8. Any changes or modifications to the approved description are noted.

4. Sampling procedures are as specified in 40 CFR, Chapter 1 (7-1-89), Appendix A, Method(s) 5 and 9.

Are there deviations to these procedures? Yes < > (No <x> If Yes, explain the deviations. _____

5. Analysis procedures are as specified in 40 CFR, Chapter 1 (7-1-89), Appendix A, Method(s) 5.

Are there deviations to these procedures? Yes < > No <x> If Yes, explain the deviations: _____

NUS CORPORATION
16360 PARK TEN PLACE
SUITE 300
HOUSTON, TEXAS 77084
(713) 492-1888

R7-362

RECEIVED
FEB 8 1991
REGION 7
TEXAS AIR CONTROL BOARD

C-48-02-1-021H

February 7, 1991

Texas Air Control Board
Compliance Department
6330 Hwy. 290 East
Austin, Texas 78723-9988

Subject: Emissions Compliance Testing at Ammonium Thiosulfate Facility, Pasadena, Texas
NUS Project Number 7F36-AA

Gentlemen:

At the request of Larry Pease of Kerley Enterprises, NUS Corporation (NUS) hereby submits three copies of the Emissions Compliance Testing report required under the Special Provisions of Texas Air Control Board (TACB) permit number C-19986. Testing was performed by NUS on January 08, 1991 at Kerley Enterprises Ammonium Thiosulfate Facility in Pasadena, Texas. A copy of this report has also been submitted to Mike Vance of the TACB regional office in Bellaire, Texas and one copy has been submitted to the Harris County Pollution Control Department.

Please feel free to call me at (713) 492-1888 if you have any questions or comments.

Very truly yours,

Stephen W. Billiott

Stephen W. Billiott
Environmental Engineer

SWB/kk

cc: Harris County Pollution Control Department
Mike Vance - TACB
Larry Pease - Kerley
File 7F36-AA

RECEIVED
FEB 8 1991
REGION 7
TEXAS AIR CONTROL BOARD

R-48-01-1-010H

EMISSIONS COMPLIANCE TESTING

FOR

NITROGEN OXIDES, SULFUR OXIDES AND AMMONIA

AT

KERLEY ENTERPRISES

AMMONIUM THIOSULFATE FACILITY

PASADENA, TEXAS

TACB PERMIT NUMBER C-19986

PREPARED BY

NUS CORPORATION
GULF COAST DIVISION

FEBRUARY 1991

NUS PROJECT NUMBER 7F36

NUS CORPORATION
GULF COAST DIVISION
A Halliburton Company

NUS CORPORATION
16360 PARK TEN PLACE
SUITE 300
HOUSTON, TEXAS 77084
(713) 492-1888

R-48-01-1-010H

February 7, 1991

Mr. Keith G. Kline
Environmental Specialist
Kerley Enterprises, Inc.
2480 W. Twin Buttes Road
Sahuarita, Arizona 85629

Subject: Emissions Compliance Testing at Ammonium Thiosulfate Facility, Pasadena, Texas
NUS Project Number 7F36-AA

Dear Mr. Kline:

Attached please find a final copy of the Emissions Compliance Testing report. This report describes emissions testing activities and results for sampling performed by NUS Corporation at the Ammonium Thiosulfate Facility in Pasadena, Texas on January 8, 1991.

This draft report has been submitted to you for your review and comments.

Very truly yours,

Stephen W Billiott

Stephen W. Billiott
Environmental Engineer

SWB/kk

Attachments

cc: Bill Cole - NUS
Jack Quinn - Kerley
Toni Truet - Kerley
Larry Pease - Kerley
File 7F36-AA

NUS CORPORATION
16360 PARK TEN PLACE
SUITE 300
HOUSTON, TEXAS 77084
(713) 492-1888

R-48-01-1-010H

EMISSIONS COMPLIANCE TESTING

FOR

NITROGEN OXIDES, SULFUR OXIDES AND AMMONIA

AT

KERLEY ENTERPRISES, INC.

AMMONIUM THIOSULFATE FACILITY

PASADENA, TEXAS

TACB PERMIT NUMBER C-19986

PREPARED BY

NUS CORPORATION
GULF COAST DIVISION

FEBRUARY 1991

NUS PROJECT NUMBER 7F36

PREPARED BY:

Stephen W. Billiott

STEPHEN W. BILLIOTT
ENVIRONMENTAL ENGINEER

REVIEWED AND APPROVED BY:

WILLIAM J. COLE, P.E.
TECHNICAL DIRECTOR

QA REPRESENTATIVE APPROVAL:

for L Barber

BURT LEE, P.E.

A Halliburton Company

TABLE OF CONTENTS

SECTION		PAGE
1.0	INTRODUCTION	1-1
2.0	SUMMARY OF RESULTS	2-1
3.0	SAMPLING PROCEDURES AND ANALYSES	3-1
3.1	OXIDES OF NITROGEN	3-1
3.2	OXIDES OF SULFUR	3-1
3.3	AMMONIA	3-1
3.4	STACK EMISSION CONDITIONS	3-1
3.5	KERLEY EMISSIONS TESTING	3-2
4.0	SAMPLING LOCATION	4-1
5.0	NUS APPROACH TO QUALITY ASSURANCE	5-1

APPENDICES

A	COMPLIANCE SAMPLING PLAN
B	FIELD DATA
C	CALCULATIONS
D	CALIBRATION DATA
E	NUS LABORATORY REPORT (AMMONIA)
F	KERLEY FACILITY OPERATION DATA

LIST OF TABLES

TABLES		PAGE
2-1	NO_x CONCENTRATION AND EMISSION RATE RESULTS	2-2
2-2	SO_x CONCENTRATION AND EMISSION RATE RESULTS	2-3
2-3	AMMONIA CONCENTRATION AND EMISSION RATE RESULTS	2-4

LIST OF FIGURES

FIGURES		PAGE
4-1	KERLEY FACILITY SAMPLING LOCATION	4-2

1.0 INTRODUCTION

NUS Corporation (NUS) was contracted by Kerley Enterprises,Inc. (Kerley) to perform Nitrogen Oxides (NO_x), Sulfur Oxides (SO_x), and Ammonia (NH_3) emissions testing at the Ammonium Thiosulfate Facility (Kerley ATF), in Pasadena, Texas.

The purpose of the testing was to determine NO_x, SO_x, and Ammonia emissions from the Ammonia Thiosulfate facility. Emissions data were collected to enable Kerley to demonstrate compliance with the allowable mass emissions rates for NO_x, SO_x, and Ammonia as specified in the Texas Air Control Board (TACB) permit number C-19986. The permitted emission rate for SO_2 is 2.34 lbs/Hr (100 ppmv) and the permitted emission rate for ammonia is 1.06 lbs/Hr (170 ppmv). These emission rates are calculated using an operational flow rate of 140,650 DSCF/Hr.

Field testing was conducted on January 8, 1991 at the Kerley facility located at 1050 Jefferson, Pasadena, Texas. Triplicate samples were collected during normal activity conditions.

Mr. Keith Kline of Kerley coordinated the test performance operations in conjunction with Larry Pease of the Kerley ATF. Mike Vance represented the TACB during pre-testing meetings and test scheduling and coordination. Emissions testing was performed by Messrs. Mark Lester and Louis Meneghetti of NUS' Gulf Coast Division Environmental Management Group, under the direction of Steve Billiott.

Prior to testing, a pre-test meeting was conducted at the TACB Bellaire facility to review and revise the Compliance Sampling Plan and schedule the compliance test. The following persons were in attendance at this pre-test meeting:

- Kerley - Keith Kline
- Kerley ATF - Larry Pease
- TACB - Mike Vance
- NUS - Steve Billiott and Bill Cole

The Compliance Sampling Plan was revised by NUS following the pretest meeting and submitted to Keith Kline of Kerley for approval. In addition, at the request of Kerley, NUS notified the Harris County Pollution Control Department (HCPCD) of the scheduled sampling event. A copy of the Compliance Sampling Plan dated December 10, 1990 is included in Appendix A of this report.

2.0 SUMMARY OF RESULTS

Three test runs for NO_x, SO_x, and Ammonia were conducted at the Kerley Facility on January 8, 1991. The facility was operating at a steady state condition near full load during the testing period.

The average NO_x emission concentration for the three test runs was 6.2 ppmv, and the average mass emission rate of NO_x was 0.104 lbs/Hr.

The average SO_x emission concentration for the three test runs was 2.2 ppmv, and the average mass emission rate of SO_x was 0.053 lbs/Hr.

The average ammonia emission concentration for the three test runs was 4.3 ppmv, and the average mass emission rate of ammonia was 0.027 lbs/Hr.

Table 2-1, 2-2, and 2-3, respectively summarize the NO_x, SO_x, and ammonia concentrations and emission rates data.

TABLE 2-1

NO_X CONCENTRATION AND EMISSION RATE RESULTS*
KERLEY ENTERPRISES, INC.
AMMONIUM THIOSULFATE FACILITY
JANUARY 08, 1991

Test Number	NO_X Concentration (ppmv)	NO_X Emission Rate (lbs/Hr)
1	5.4	0.091
2	6.6	0.112
3	6.5	0.108
AVG	6.2	0.104

*No regulatory limit specified.

TABLE 2-2

SO_2 AND SO_3 CONCENTRATION AND EMISSION RATE DATA*
KERLEY ENTERPRISES, INC.
AMMONIUM THIOSULFATE FACILITY
JANUARY 08, 1991

Test Number	SO_2 Concentration (ppmv)	SO_2 Emission Rate (lbs/Hr)	SO_3 Concentration (ppmv)	SO_3 Emission Rate (lbs/Hr)
1	1.2	0.028	0.2	0.005
2	2.7	0.064	0.3	0.009
3	1.7	0.039	0.5	0.015
AVG	1.9	0.044	0.3	0.01

*SO_2 regulatory limit is 2.34 lbs/Hr at 140,650 DSCF/Hr (100 ppmv).

TABLE 2-3

AMMONIA CONCENTRATION AND EMISSION RATE RESULTS*
KERLEY ENTERPRISES, INC.
AMMONIUM THIOSULFATE FACILITY
JANUARY 08, 1991

Test Number	Ammonia Concentration (ppmv)	Ammonia Emission Rate (lbs/Hr)
1	1.8	0.011
2	5	0.031
3	6.2	0.038
AVG	4.3	0.027

*Ammonia regulatory limit is 1.06 lbs/Hr at 140,650 DSCF/Hr (170 ppmv).

3.0 SAMPLING PROCEDURES AND ANALYSES

3.1 OXIDES OF NITROGEN

Oxides of Nitrogen were determined in accordance with 40 CFR 60 Appendix 7E, Instrumental Analyzer Procedure. Sample lines were extended down from the sampling location to the NUS on-site mobile laboratory vehicle where the collected sample gas was conveyed to an instrumental chemiluminescent analyzer and the NO_x concentration was determined for all three test runs.

3.2 OXIDES OF SULFUR

Oxides of Sulfur samples were collected according to TACB sampling procedures. A five impinger sample train was used to collect samples during each sample run. The first impinger contained a solution of 80 percent isopropyl alcohol. The second and third impingers each contained 200 ml of six percent hydrogen peroxide. The fourth impinger was dry. The fifth impinger contained silica gel. Sampling was performed in triplicate over 30-minute sampling periods. A minimum of 10 dry standard cubic feet (DSCF) was drawn through the impinger train during each sample run. Analyses of the impinger samples was made in the laboratory to determine: sulfur trioxide (SO_3), sulfur dioxide (SO_2), and condensible water vapor.

3.3 AMMONIA

Ammonia samples were collected in a four impinger sampling train. The first and second impinger each contained 200 ml of 0.1N sulfuric acid (H_2SO_4). The third impinger was dry and the fourth impinger contained silica gel. Sampling was performed in triplicate over 30-minute sampling intervals. A minimum of 10 DSCF of exhaust gas was drawn through the impinger train during each sample run. Analyses were conducted in the laboratory for ammonia and condensible water vapor.

3.4 STACK EMISSION CONDITIONS

During each sampling interval velocity traverses were made by NUS in the 8-inch diameter fiberglass ducting to determine the exhaust gas flow rate. Integrated Orsat samples were taken during each sample run to determine the gaseous content of the exhaust gases in accordance with 40 CFR Appendix A Method 3.

Concurrently with the emissions sampling, Kerley was recording: fan amperage, pH, and other pertinent operational data. These data are included in Appendix F of this report.

3.5 KERLEY EMISSIONS TESTING

Kerley performs emissions testing of the exhaust gas using Drager sampling tubes. The sample is collected from a sample line extending down from a sample port in the 8-inch diameter ducting leading to the exhaust stack. This sampling is performed on a daily basis and results are recorded in the log book located in the control room. The log book entry for the NUS testing date (January 08, 1991) is included in Appendix F.

4.0 SAMPLING LOCATION

Exhaust gas emission samples were collected from a straight run of 8-inch diameter fiberglass horizontal ducting which lead from the ammonium thiosulfate process system to the vertical exhaust stack. The straight run of ducting was approximately 35 feet in length from bend to bend. A schematic view of the process facility is included in Figure 4-1.

Figure 4-1
Kerley Facility Sampling Location

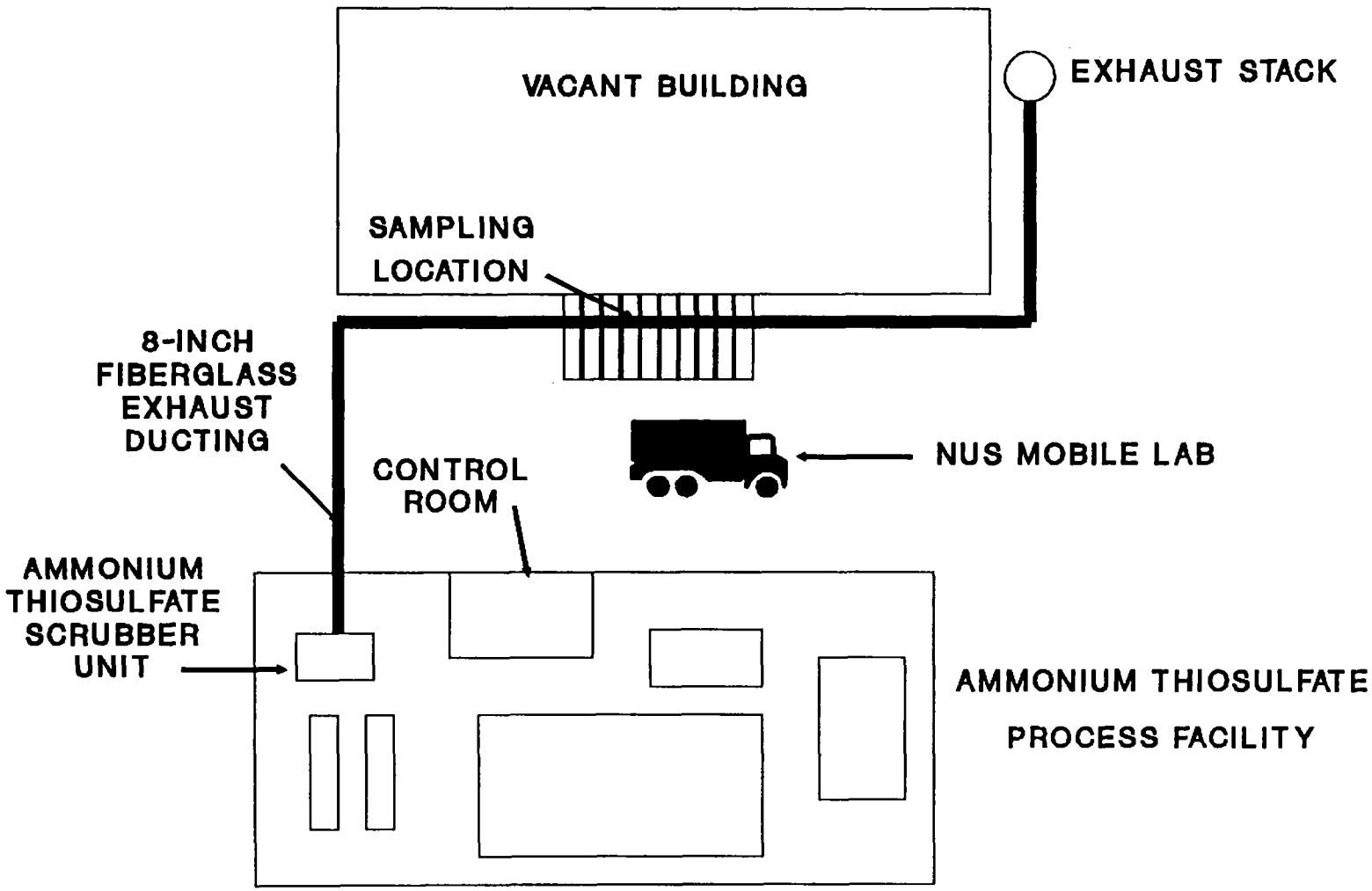

5.0 NUS' APPROACH TO QUALITY ASSURANCE

It is the policy of NUS Corporation, Environmental Management Group, to perform all field sampling work, laboratory analyses, data reduction, and record storage in accordance with USEPA and/or TACB test protocol wherever applicable.

APPENDIX A

COMPLIANCE SAMPLING PLAN

NUS CORPORATION
16360 PARK TEN PLACE, SUITE 300
HOUSTON, TEXAS 77084
713-492-1888
FAX: 713-492-0504

C-48-12-0-018H

December 10, 1990

Mr. Keith G. Kline
Kerley Enterprises, Inc.
2480 W. Twin Buttes Road
Saguarita, Arizona 85629

Subject: Work Plan for Emissions Testing at Ammonium Thiosulfate Facility, Pasadena, Texas
NUS Project Number 7536 AA

Dear Mr. Kline:

The following work plan is provided as a basis for discussion during the pretest meeting with the Texas Air Control Board (TACB) on December 12, 1990, at 10:30 a.m.

TECHNICAL UNDERSTANDING

It is understood that Kerley wishes to evaluate Sulfur Dioxide (SO_2), Ammonia (NH_3), and Nitrogen Oxides (NO_x) emissions from their Ammonium Thiosulfate manufacturing facility in accordance with the requirements of Texas Air Control Board (TACB) permit special provisions C-19986.

Emissions testing will be performed from the 8-inches diameter fiberglass exhaust duct upstream of the emissions stack. Gas velocities in this duct are estimated to be approximately 118 feet per second (118 fps). Two 2-inches diameter sample taps will be provided by Kerley, in the exhaust ducting at least eight diameters downstream of any bend or obstruction. Access to the ducting will be from a stairway platform. 440 volt, three phase electrical services are available adjacent to the project sample site.

SCOPE OF WORK

NUS is to obtain Sulfur Oxide (SO_x) samples in accordance with TACB sampling procedures. A five impinger sampling train will be used to collect samples during each sample run. The first impinger will contain a solution of 80 percent isopropyl alcohol. The second and third impingers will both contain a 200 ml of six percent hydrogen peroxide. The fourth impinger will be dry. The fifth impinger will contain silica gel. Sampling will be performed in triplicate over 30 minute sampling periods. A minimum of ten dry standard cubic feet (DSCF) of exhaust gas will be drawn through the impinger train during each sample run. Analyses of impinger samples will be made in the laboratory for; Sulfur Trioxide (SO_3), Sulfur Dioxide (SO_2) and Condensible Water Vapor.

Ammonia samples will be collected in a four impinger sampling train. The first and second impinger will each contain 200 ml of O.1N H_2SO_4. The third impinger will be dry and the fourth impinger will contain silica gel. Sampling will be performed in triplicate over 30 minute sampling intervals. A minimum of ten DSCF exhaust gas will be drawn through the impinger train during each sample run. Analyses will be made in the laboratory for Ammonia (NH_3) and Condensible Water Vapor.

Nitrogen Oxides (NO_x) will be determined in accordance with 40 CFR 60 Appendix A Method 7E, Instrumental Analyzer Procedure. Sample lines will extend down from the sample location to the NUS on-site mobile laboratory vehicle where the sample gas is conveyed to an instrumental chemiluminescent analyzer for determination of NO_x concentration. Three phase, 440 volt electrical service will be supplied by Kerley to serve this vehicle. NUS can transform down to 110 volt, one phase service for the SOx and NH_3 sample trains at the exhaust ducting.

During each sampling event velocity traverses will be made in the 8-inch diameter fiberglass ducting. Exhaust gas moisture content will be determined from the gravimetric increase in the contents of the SOx or NH_3 sample trains. Integrated Orsat samples will be taken during each sample run to determine the gaseous content of the exhaust gases in accordance with 40 CFR 60 Appendix A Method 3.

Concurrently with emissions sampling, Kerley will record: Fan amperage, pH, and other pertinent operational data. These data are for inclusion in the compliance test report which NUS will prepare on completion of sampling and analyses.

Testing will be performed during a single work day. Equipment set-up will be performed the day before the compliance sampling event.

Prior to sampling, a pretest meeting will be convened at the regional office of the TACB in Bellaire on December 12, 1990 at 10:30 a.m. The sampling and plant operational program will be reviewed. On completion of the pretest meeting, NUS will prepare a detailed sampling plan incorporating any additional commentary offered by the TACB.

Mike Vance will represent the TACB during the pre-test meeting. By copy of this letter the appropriate TACB regional office will be notified as required under the "Special Provisions of Permit" C-19986.

On completion of field sampling and laboratory analyses, NUS will prepare a sampling report in a format suitable for presentation to TACB.

Please feel free to contact me at (713) 492-1888 if you have any questions or comments.

Very truly yours,

Stephen W. Billiott

Stephen W. Billiott
Environmental Engineer

SWB/sn

cc: Mike Vance - TACB
Bill Cole - NUS
File 7536

APPENDIX B

FIELD DATA

NUS CORPORATION
A Halliburton Company

VELOCITY TRAVERSE FIELD DATA

Prepared by: MAC
Date: 1-8-91
Checked by: LRM
Date: 1-8-91

Plant Kirley

Date 1-8-90 Time _____ Run _____
Source Name _____
Bar. Pres. 29.95 In. Hg. Stack Pres. +2.8" In. H_2O
Stack ID _____ Inches Ambient Temp. _____ °F
Port Extensions (Inches) (1) 4.75 (2) 4.75
Comments:
107 dry bulb
~~107~~ wet bulb 7.2% H_2O

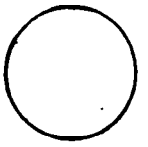

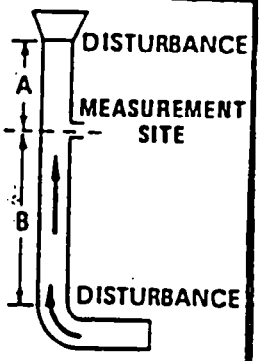

	Point No.	% Dia.	Dist. From Ref. Point (inches)	Ts-Stack Temp. °F	ΔP-Vel. Head inches H_2O								
				Ts_1	ΔP_1	$\sqrt{\Delta P_1}$	Ts_2	ΔP_2	$\sqrt{\Delta P_2}$	Ts_3	ΔP_3	$\sqrt{\Delta P_3}$	
	1	6.7	0.5 + Port	107	2.55	1.5969	107	2.75	1.6583	107	3.30	1.8166	
Top	2	25.0	2.0 + Port		2.65	1.6279		2.95	1.7176		3.70	1.8235	
	3	75.0	6.0 + Port	Flow	2.50	1.5811	Flow	2.65	1.6279	Flow	3.50	1.8708	
	4	93.3	7.5 + Port	Test A	2.50	1.5811	Test B	2.25	1.5000	Test C	2.75	1.6583	
	1				2.85	1.6882		3.10	1.7607		4.00	2.0000	
side	2				2.70	1.6432		3.00	1.7321		3.85	1.8621	
	3				2.60	1.6125		3.00	1.7321		3.20	1.7889	
	4				2.30	1.5427		2.45	1.5652		2.80	1.6733	
					AVG	1.6092		[illegible]	1.6617			1.9367	
	1			107	3.25	1.8028							
	2				3.55	1.8841							
	3				2.90	1.7029							
	4				2.90	1.7029							
	1		Flow Test D		3.80	1.9449							
	2				3.70	1.9235							
	3				3.10	1.7607							
	4				2.40	1.5492							
					AVG	1.7844							

NUS CORPORATION
A Halliburton Company

ORSAT FIELD DATA SHEET

Kirkp

Prepared by: MAL
Checked by: ____
Date: 1-8-91

Time 1020-1120
Run 1 Sample A Sample B Sample C
F_o Factor ____
Equip./Analyzer Ck.

%		%	%		%	%		%	%		%
CO_2	0.0	CO_2 ____	CO_2	0.0	CO_2 ____	CO_2	0.0	CO_2 ____	CO_2 ____		CO_2 ____
$CO_2 + O_2$	3.8	O_2 ____	$CO_2 + O_2$	3.8	O_2 ____	$CO_2 + O_2$	3.8	O_2 ____	$CO_2 + O_2$ ____		O_2 ____
$CO_2 + O_2 + CO$	____	CO ____	$CO_2 + O_2 + CO$	____	CO ____	$CO_2 + O_2 + CO$	____	CO ____			

Time 1150-1250
Run 2 Sample A Sample B Sample C
F_o Factor ____
Equip./Analyzer Ck.

%		%	%		%	%		%	%		%
CO_2	0.0	CO_2 ____	CO_2	0.0	CO_2 ____	CO_2	0.0	CO_2 ____	CO_2 ____		CO_2 ____
$CO_2 + O_2$	4.0	O_2 ____	$CO_2 + O_2$	3.7	O_2 ____	$CO_2 + O_2$	4.0	O_2 ____	$CO_2 + O_2$ ____		O_2 ____
$CO_2 + O_2 + CO$	____	CO ____	$CO_2 + O_2 + CO$	____	CO ____	$CO_2 + O_2 + CO$	____	CO ____			

Time 1324-1424
Run 3 Sample A Sample B Sample C
F_o Factor ____
Equip./Analyzer Ck.

%		%	%		%	%		%	%		%
CO_2	0.0	CO_2 ____	CO_2	0.0	CO_2 ____	CO_2	0.1	CO_2 ____	CO_2 ____		CO_2 ____
$CO_2 + O_2$	4.2	O_2 ____	$CO_2 + O_2$	4.2	O_2 ____	$CO_2 + O_2$	4.2	O_2 ____	$CO_2 + O_2$ ____		O_2 ____
$CO_2 + O_2 + CO$	____	CO ____	$CO_2 + O_2 + CO$	____	CO ____	$CO_2 + O_2 + CO$	____	CO ____			

Time ____
Run ____ Sample ____ Sample ____ Sample ____
F_o Factor ____
Equip./Analyzer Ck.

%		%	%		%	%		%	%		%
CO_2	____	CO_2 ____	CO_2	____	CO_2 ____	CO_2	____	CO_2 ____	CO_2 ____		CO_2 ____
$CO_2 + O_2$	____	O_2 ____	$CO_2 + O_2$	____	O_2 ____	$CO_2 + O_2$	____	O_2 ____	$CO_2 + O_2$ ____		O_2 ____
$CO_2 + O_2 + CO$	____	CO ____	$CO_2 + O_2 + CO$	____	CO ____	$CO_2 + O_2 + CO$	____	CO ____			

$$F_o = \frac{20.9 - \%O_{2d}}{\%CO_{2d}}$$

*Fuel Type ____
F_o Given ±5 ____
O_2 Value 20.9 ± 0.3

NUS CORPORATION
A Halliburton Company

SOURCE SAMPLING FIELD DATA

Prepared by: LRM
Checked by: MAL
Date: 1-8-91

PLANT Kerley | STACK KERLEY AMMONIUM THIOSULFATE
DATE 1-6-91 | OPER. MAL/LRM | RUN NO. 1 | STACK HEIGHT
STACK DIA. (exit) 6" | STACK DIA. (port) 6" | STACK PRESS. "H_2O +2.8 | BAR. PRESS. "Hg 30.45
PROBE NO. – | PTCF .99 | DGMCF 0.979 | NOZZLE NO.
NOZZLE AREA – | FILTER NO. — | SILICA GEL NO. | PUMP LEAK RATE
METER NO. SGI #1 | ΔH @ – | BOX NO. | UNIT LEAK RATE
PROCESS DATA 50X | ASSUM. MOIST. 2% | NOM. REF. PT. | PROBE LINER

PT	Mins. Clock Time	Ft³ Dry Gas Meter Reading	In. H_2O ΔP	In. H_2O ΔH	°F ~~Probe Temp.~~	Dry Gas Meter Temp. °F Inlet	Dry Gas Meter Temp. °F Outlet	In. Hg Gauge Line Vacuum	Temp. °F Box	Temp. °F Ts Stack	Temp. °F Last Imp.	√ΔP
	10:20	915.480		0.30		46	46	0			67	
	10:30	923.308		0.30		46	48	0			65	
	10:40	925.705		0.30		47	49	0			64	
	10:50	928.710		0.30		47	49	0			64	
					PURGE 10 min							
1			3.75								107	
Bottom 2			3.70								107	
3			2.35								107	
4			3.00								106	
1			3.35								106	
Top 2			3.60								107	
3			2.90								107	
4			2.70								106	

SAMPLE TIME | NET VOL. | AVG ΔH | AVG METER TEMP | AVG STACK TEMP. °F | AVG √ΔP

FINAL LEAK CHECK: < 0.005 AT 1 in Hg

PURGE: 10 min

NUS CORPORATION
A Halliburton Company

SOURCE SAMPLING FIELD DATA

Prepared by: LRM
Checked by: MAL
Date: 1-8-91

PLANT KERLEY | STACK KERLEY AMMONIUM THIOSULFATE
DATE 1/8/91 | OPER. MAL/LRM | RUN NO. 2 | STACK HEIGHT –
STACK DIA. (exit) 3" | STACK DIA. (port) 8" | STACK PRESS. "H_2O 2.8 | BAR. PRESS. "Hg 30.45
PROBE NO. – | PTCF 0.99 | DGMCF 0.979 | NOZZLE NO. –
NOZZLE AREA – | FILTER NO. – | SILICA GEL NO. – | PUMP LEAK RATE –
METER NO. SGI-1 | ΔH @ – | BOX NO. – | UNIT LEAK RATE –
PROCESS DATA SO_x | ASSUM. MOIST. 7.0% | NOM. REF. PT. – | PROBE LINER –

PT	Mins. Clock Time	Ft³ Dry Gas Meter Reading	In. H_2O ΔP	In. H_2O ΔH	°F Probe Temp.	Dry Gas Meter Temp. °F Inlet	Dry Gas Meter Temp. °F Outlet	In. Hg Gauge Line Vacuum	Temp. °F Box	Temp. °F Ts Stack	Temp. °F Last Imp.	$\sqrt{\Delta P}$
	11:55	943.952		0.35		50	53	0			63	
	12:05	947.202		0.35		51	55	0			63	
	12:15	950.498		0.35		51	54	0			62	
	12:25	954.000		0.35		51	54	0			62	
1			3.30							106		
Top 2			3.60							106		
3			3.00							105		
4			2.95							107		
1			3.80							107		
2			3.55							106		
Side 3			2.65							105		
4			2.30							105		

SAMPLE TIME | NET VOL. | AVG ΔH | AVG METER TEMP | AVG STACK TEMP. °F | AVG $\sqrt{\Delta P}$

FINAL LEAK CHECK < 0.005 AT 1 in Hg

PURGE: 10 min

NUS CORPORATION
A Halliburton Company

SOURCE SAMPLING FIELD DATA

Prepared by: LRM
Checked by: MAL
Date: 1-8-91

PLANT KERLEY STACK KERLEY AMMONIUM THIOSULFATE
DATE 1/8/91 OPER. MAL/LRM RUN NO. 3 STACK HEIGHT -
STACK DIA. (exit) 8" STACK DIA. (port) 8" STACK PRESS. "H_2O 2.8 BAR. PRESS. "Hg 30.45
PROBE NO. — PTCF 0.99 DGMCF 0.979 NOZZLE NO. -
NOZZLE AREA — FILTER NO. — SILICA GEL NO. — PUMP LEAK RATE -
METER NO. SGT-1 ΔH @ — BOX NO. — UNIT LEAK RATE -
PROCESS DATA SO_x ASSUM. MOIST. 7.% NOM. REF. PT. — PROBE LINER Teflon

PT	Mins. Clock Time	Ft³ Dry Gas Meter Reading	In. H_2O ΔP	In. H_2O ΔH	°F Probe Temp.	Dry Gas Meter Temp. °F Inlet	Dry Gas Meter Temp. °F Outlet	In. Hg Gauge Line Vacuum	Temp. °F Box	Temp. °F Ts Stack	Temp. °F Last Imp.	$\sqrt{\Delta P}$
	13:21	966.977		0.36		52	54	0			60	
	13:31	970.396		0.36		52	54	0			58	
	13:41	973.654		0.36		52	55	0			56	
	13:51	977.155		0.36		52	54	0			57	
1			3.30							115		
2			3.50							115		
To/ 3			3.00							114		
4			2.70							113		
1			3.70							114		
2			3.60							116		
3			2.80							115		
4			2.20							115		

SAMPLE TIME | NET VOL. | AVG ΔH | AVG METER TEMP | AVG STACK TEMP. °F | AVG $\sqrt{\Delta P}$

FINAL LEAK TEST < 0.005 AT 1 in Hg
PURGE: 10 min

NUS CORPORATION
A Halliburton Company

SOURCE SAMPLING FIELD DATA

Prepared by: LRM
Checked by: MAL
Date: 1-8-91

PLANT KERLEY
STACK KERLEY AMMONIUM THIOSULFATE
DATE 1-8-91
OPER. MAL / LRM
RUN NO. 1
STACK HEIGHT —
STACK DIA. (exit) 8"
STACK DIA. (port) 8"
STACK PRESS. "H_2O 2.8
BAR. PRESS. "Hg 30.45
PROBE NO. —
PTCF 0.99
DGMCF 0.979
NOZZLE NO. —
NOZZLE AREA —
FILTER NO. —
SILICA GEL NO. —
PUMP LEAK RATE —
METER NO. 56I-1
ΔH @ —
BOX NO. —
UNIT LEAK RATE —
PROCESS DATA NH_3
ASSUM. MOIST. 7.0%
NOM. REF. PT. —
PROBE LINER —

PT	Mins. Clock Time	Ft^3 Dry Gas Meter Reading	In. H_2O ΔP	In. H_2O ΔH	°F Probe Temp.	Dry Gas Meter Temp. °F Inlet	Dry Gas Meter Temp. °F Outlet	In. Hg Gauge Line Vacuum	Temp. °F Box	Temp. °F Ts Stack	Temp. °F Last Imp.	$\sqrt{\Delta P}$
	11:10	931.786		0.30		48	50	0			63	
	11:20	934.906		0.30		49	51	0			64	
	11:30	938.170		0.30		49	53	0			63	
	11:40	941.410		0.30		50	52	0			62	

SAMPLE TIME | NET VOL. | AVG ΔH | AVG METER TEMP | AVG STACK TEMP. °F | AVG $\sqrt{\Delta P}$

FINAL LEAK CHECK: < 0.005 at 1 in Hg

~~PURGE~~

NUS CORPORATION
A Halliburton Company

SOURCE SAMPLING FIELD DATA

Prepared by: LRM
Checked by: MAL
Date: 1-8-91

PLANT KERLEY STACK KERLEY AMMONIUM THIOSULFATE

DATE 1/8/91 OPER. MAL/LRM RUN NO. 2 STACK HEIGHT –

STACK DIA. (exit) 8" STACK DIA. (port) 8" STACK PRESS. "H_2O" 2.8 BAR. PRESS. "Hg 30.45

PROBE NO. – PTCF 0.99 DGMCF 0.979 NOZZLE NO. –

NOZZLE AREA – FILTER NO. – SILICA GEL NO. – PUMP LEAK RATE –

METER NO. SGI-1 ΔH @ – BOX NO. – UNIT LEAK RATE –

PROCESS DATA NH_3 ASSUM. MOIST. 7.0% NOM. REF. PT. – PROBE LINER –

PT	Mins. Clock Time	Ft³ Dry Gas Meter Reading	In. H_2O ΔP	In. H_2O ΔH	°F Probe Temp.	Dry Gas Meter Temp. °F Inlet	Dry Gas Meter Temp. °F Outlet	In. Hg Gauge Line Vacuum	Temp. °F Box	Temp. °F Ts Stack	Temp. °F Last Imp.	$\sqrt{\Delta P}$
	12:42	955.630		0.36		51	52	0			62	
	12:52	959.219		0.36		51	54	0			61	
	13:02	962.990		0.36		51	55	0			61	
	13:12	965.838		0.36		52	54	0			60	

SAMPLE TIME | NET VOL. | AVG ΔH | AVG METER TEMP | AVG STACK TEMP. °F | AVG $\sqrt{\Delta P}$

FINAL LEAK CHECK: < 0.005 AT 1 in Hg

NUS CORPORATION
A Halliburton Company

SOURCE SAMPLING FIELD DATA

Prepared by: LRM
Checked by: MAL
Date: 1-8-91

PLANT KERLEY STACK KERLEY AMMONIUM THIOSULFATE
DATE 1/8/91 OPER. MAL/LRM RUN NO. 3 STACK HEIGHT –
STACK DIA. (exit) 8" STACK DIA. (port) 8" STACK PRESS. "H_2O 2.8 BAR. PRESS. "Hg 30.45
PROBE NO. – PTCF 0.99 DGMCF 0.979 NOZZLE NO. –
NOZZLE AREA – FILTER NO. – SILICA GEL NO. – PUMP LEAK RATE –
METER NO. 561-1 ΔH @ – BOX NO. – UNIT LEAK RATE –
PROCESS DATA NH_3 ASSUM. MOIST. 7.0% NOM. REF. PT. – PROBE LINER –

PT	Mins. Clock Time	Ft³ Dry Gas Meter Reading	In. H_2O ΔP	In. H_2O ΔH	°F Probe Temp.	Dry Gas Meter Temp. °F Inlet	Dry Gas Meter Temp. °F Outlet	In. Hg Gauge Line Vacuum	Temp. °F Box	Temp. °F Ts Stack	Temp. °F Last Imp.	$\sqrt{\Delta P}$
	14:12	980.970		0.36		52	54	0			~~58~~	
	14:22	984.201		0.36		52	54	0			~~56~~	
	14:32	987.5[illegible]		0.36		53	55	0			~~56~~	
	14:42	991.25[illegible]		0.36		53	55	0			~~57~~	

SAMPLE TIME | NET VOL. | AVG ΔH | AVG METER TEMP | AVG STACK TEMP. °F | AVG $\sqrt{\Delta P}$

FINAL LEAK CHECK < 0.005 AT 1 in Hg

NUS CORPORATION
A Halliburton Company

EPA-SOURCE SAMPLING
ANALYTICAL DATA

Prepared by: LRM
Date: 1/8/90

PLANT KERLEY SOURCE KERLEY ~~AMMONIUM~~ THIOSULFATE
CITY PASADENA
BOX 1 RUN NO. ~~[illegible]~~ SOX-1 DATE 1/8/90

PARTICULATES: Filter No. _____ Silica Gel No. _____
Wt. Filter - Final _____ Final Weight _____
Wt. Filter - Tare _____ Initial Weight 310.20
Net Increase _____ Net Increase (TS) _____ g

Impinger Catch
Wt. - Final _____
Wt. - Tare _____
Net Increase _____

Probe Wash Particulate
Wt. - Final _____
Wt. - Tare _____
Net Increase _____

Weight Total Particulate (GPC) _____ g.

MOISTURE:	Flask 1	Flask 2	Flask 3	Flask 4	Flask 5	Flask 6
Container ID	80% IPA	6% H_2O_2	6% H_2O_2	DRY	SILICA	
Final Volume	229.03	274.62	268.62		315.83	
Initial Volume	233.90	268.03	269.28		310.20	
Net Increase	-4.87	6.59	-0.66		5.63	

Total Water Collected (TWW) 6.69 ml

$$\% \text{ MOISTURE} = \frac{(0.04707 \times \text{TWW}) \times 100}{\text{Vm (Std)} + (0.04707 \times \text{TWW})} =$$

ORSAT:

Time _____

				Avg.
CO_2	____	____	____	____
O_2	____	____	____	____
CO	____	____	____	____

Convert to ml by dividing by the density of water (1 g/ml)

MOLECULAR WEIGHT: (MWSG) g/mole

H_2O	-	x 18		=
CO_2	-	x	x 44	=
O_2	-	x	x 32	=
CO	-	x	x 28	=
N_2	-	x	x 28	=

NUS CORPORATION
A Halliburton Company

EPA-SOURCE SAMPLING
ANALYTICAL DATA

Prepared by: LRM
Date: 1-8-91

PLANT KERLEY SOURCE KERLEY AMMONIUM THIOSULFATE
CITY PASADENA
BOX 1 RUN NO. SOX-2 DATE 1/8/91

PARTICULATES: Filter No. _____ Silica Gel No. _____
Wt. Filter - Final _____ Final Weight _____
Wt. Filter - Tare _____ Initial Weight _____
Net Increase _____ Net Increase (TS) _____ g

Impinger Catch
Wt. - Final _____
Wt. - Tare _____
Net Increase _____

Probe Wash Particulate
Wt. - Final _____
Wt. - Tare _____
Net Increase _____

Weight Total Particulate (GPC) _____ g.

MOISTURE:	Flask 1	Flask 2	Flask 3	Flask 4	Flask 5	Flask 6
Container ID	80% IPA	6% H_2O_2	6% H_2O_2	DRY	SILICA	
Final Volume	232.22	275.81	268.63		298.67	
Initial Volume	234.88	269.50	267.86		296.78	
Net Increase	-2.66	6.31	0.77		1.89	

Total Water Collected (TWW) 6.31 ml

$$\% \text{ MOISTURE} = \frac{(0.04707 \times TWW) \times 100}{Vm\ (Std) + (0.04707 \times TWW)} =$$

ORSAT:

Time _____

				Avg.
CO_2	____	____	____	____
O_2	____	____	____	____
CO	____	____	____	____

Convert to ml by dividing by the density of water (1 g/ml)

MOLECULAR WEIGHT: (MWSG) g/mole

H_2O	-	x 18		=
CO_2	-	x	x 44	=
O_2	-	x	x 32	=
CO	-	x	x 28	=
N_2	-	x	x 28	=

NUS CORPORATION
A Halliburton Company

EPA-SOURCE SAMPLING
ANALYTICAL DATA

Prepared by: LRM
Date: 1-8-91

PLANT KERLEY SOURCE KERLEY AMMONIUM THIOSULFATE
CITY PASADENA
BOX 1 RUN NO. SOx-3 DATE 1/8/91

PARTICULATES: Filter No. _____ Silica Gel No. _____
Wt. Filter - Final _____ Final Weight _____
Wt. Filter - Tare _____ Initial Weight _____
Net Increase _____ Net Increase (TS) _____ g

Impinger Catch
Wt. - Final _____
Wt. - Tare _____
Net Increase _____

Probe Wash Particulate
Wt. - Final _____
Wt. - Tare _____
Net Increase _____

Weight Total Particulate (GPC) _____ g.

MOISTURE:	Flask 1	Flask 2	Flask 3	Flask 4	Flask 5	Flask 6
Container ID	80% IPA	6% H_2O_2	6% H_2O_2	DRY	SILICA	
Final Volume	227.52	277.58	270.90		299.22	
Initial Volume	232.89	269.78	269.40	~~296.40~~	296.40	
Net Increase	-5.37	7.80	1.50		2.82	

Total Water Collected (TWW) 6.75 ml

$$\% \text{ MOISTURE} = \frac{(0.04707 \times TWW) \times 100}{Vm\ (Std) + (0.04707 \times TWW)} =$$

ORSAT:

Time _____

				Avg.
CO_2	____	____	____	____
O_2	____	____	____	____
CO	____	____	____	____

Convert to ml by dividing by the density of water (1 g/ml)

MOLECULAR WEIGHT: (MWSG) g/mole

H_2O	-	x 18		=
CO_2	-	x	x 44	=
O_2	-	x	x 32	=
CO	-	x	x 28	=
N_2	-	x	x 28	=

NUS CORPORATION
A Halliburton Company

EPA-SOURCE SAMPLING
ANALYTICAL DATA

Prepared by: LRM
Date: 1-8-91

PLANT KERLEY SOURCE KERLEY AMMONIUM THIOSULFATE
CITY HOUSTON
BOX 1 RUN NO. NH_3-1 DATE 1/8/91

PARTICULATES: Filter No. _____ Silica Gel No. _____
Wt. Filter - Final _____ Final Weight _____
Wt. Filter - Tare _____ Initial Weight _____
Net Increase _____ Net Increase (TS) _____ g

Impinger Catch
Wt. - Final _____
Wt. - Tare _____
Net Increase _____

Probe Wash Particulate
Wt. - Final _____
Wt. - Tare _____
Net Increase _____

Weight Total Particulate (GPC) _____ g.

MOISTURE:

	Flask 1	Flask 2	Flask 3	Flask 4	Flask 5	Flask 6
Container ID	0.1 N H_2SO_4	0.1 N H_2SO_4	DRY	SILICA		
Final Volume	274.66	268.31		316.15		
Initial Volume	269.45	268.30		312.70		
Net Increase	5.21	00.01		3.45		

Total Water Collected (TWW) 8.67 ml

$$\% \text{ MOISTURE} = \frac{(0.04707 \times TWW) \times 100}{Vm\ (Std) + (0.04707 \times TWW)} =$$

ORSAT:

Time _____

				Avg.
CO_2	____	____	____	____
O_2	____	____	____	____
CO	____	____	____	____

Convert to ml by dividing by the density of water (1 g/ml)

MOLECULAR WEIGHT: (MWSG) g/mole

H_2O	-	x 18		=
CO_2	-	x	x 44	=
O_2	-	x	x 32	=
CO	-	x	x 28	=
N_2	-	x	x 28	=

NUS CORPORATION
A Halliburton Company

EPA-SOURCE SAMPLING
ANALYTICAL DATA

Prepared by: LRN
Date: 1-8-91

PLANT KERLEY SOURCE KERLEY AMMONIUM THIOSULFATE
CITY PASADENA
BOX 1 RUN NO. NH_3 - 2 DATE 1/8/91

PARTICULATES: Filter No. _____ Silica Gel No. _____
Wt. Filter - Final _____ Final Weight _____
Wt. Filter - Tare _____ Initial Weight _____
Net Increase _____ Net Increase (TS) _____ g

Impinger Catch
Wt. - Final _____
Wt. - Tare _____
Net Increase _____

Probe Wash Particulate
Wt. - Final _____
Wt. - Tare _____
Net Increase _____

Weight Total Particulate (GPC) _____ g.

MOISTURE:	Flask 1	Flask 2	Flask 3	Flask 4	Flask 5	Flask 6
Container ID	0.1 N H_2SO_4	0.1 N H_2SO_4	DRY	SILICA		
Final Volume	271.52	268.27		303.43		
Initial Volume	267.98	266.80		301.08		
Net Increase	3.54	1.47		2.35		

Total Water Collected (TWW) 7.36 ml

$$\% \text{ MOISTURE} = \frac{(0.04707 \times TWW) \times 100}{Vm\ (Std) + (0.04707 \times TWW)} =$$

ORSAT:

Time _____

				Avg.
CO_2	____	____	____	____
O_2	____	____	____	____
CO	____	____	____	____

Convert to ml by dividing by the density of water (1 g/ml)

MOLECULAR WEIGHT: (MWSG) g/mole

H_2O -	x 18		=
CO_2 -	x	x 44	=
O_2 -	x	x 32	=
CO -	x	x 28	=
N_2 -	x	x 28	=

NUS CORPORATION
A Halliburton Company

EPA-SOURCE SAMPLING
ANALYTICAL DATA

Prepared by: LRM
Date: 1-8-91

PLANT KERLEY SOURCE KERLEY AMMONIUM THIOSULFATE
CITY PASADENA
BOX 1 RUN NO. NH_3-3 DATE 1/8/91

PARTICULATES: Filter No. _____ Silica Gel No. _____
Wt. Filter - Final _____ Final Weight _____
Wt. Filter - Tare _____ Initial Weight _____
Net Increase _____ Net Increase (TS) _____ g

Impinger Catch
Wt. - Final _____
Wt. - Tare _____
Net Increase _____

Probe Wash Particulate
Wt. - Final _____
Wt. - Tare _____
Net Increase _____

Weight Total Particulate (GPC) _____ g.

MOISTURE:	Flask 1	Flask 2	Flask 3	Flask 4	Flask 5	Flask 6
Container ID	0.1 N H_2SO_4	0.1 N H_2SO_4	DRY	SILICA		
Final Volume	271.67	267.50		310.51		
Initial Volume	267.54	266.83		308.30		
Net Increase	4.13	0.67		2.21		

Total Water Collected (TWW) 7.01 ml

$$\% \text{ MOISTURE} = \frac{(0.04707 \times TWW) \times 100}{Vm\ (Std) + (0.04707 \times TWW)} =$$

ORSAT:

Time _____

				Avg.
CO_2	____	____	____	____
O_2	____	____	____	____
CO	____	____	____	____

Convert to ml by dividing by the density of water (1 g/ml)

MOLECULAR WEIGHT: (MWSG) g/mole

H_2O	-	x 18		=
CO_2	-	x	x 44	=
O_2	-	x	x 32	=
CO	-	x	x 28	=
N_2	-	x	x 28	=

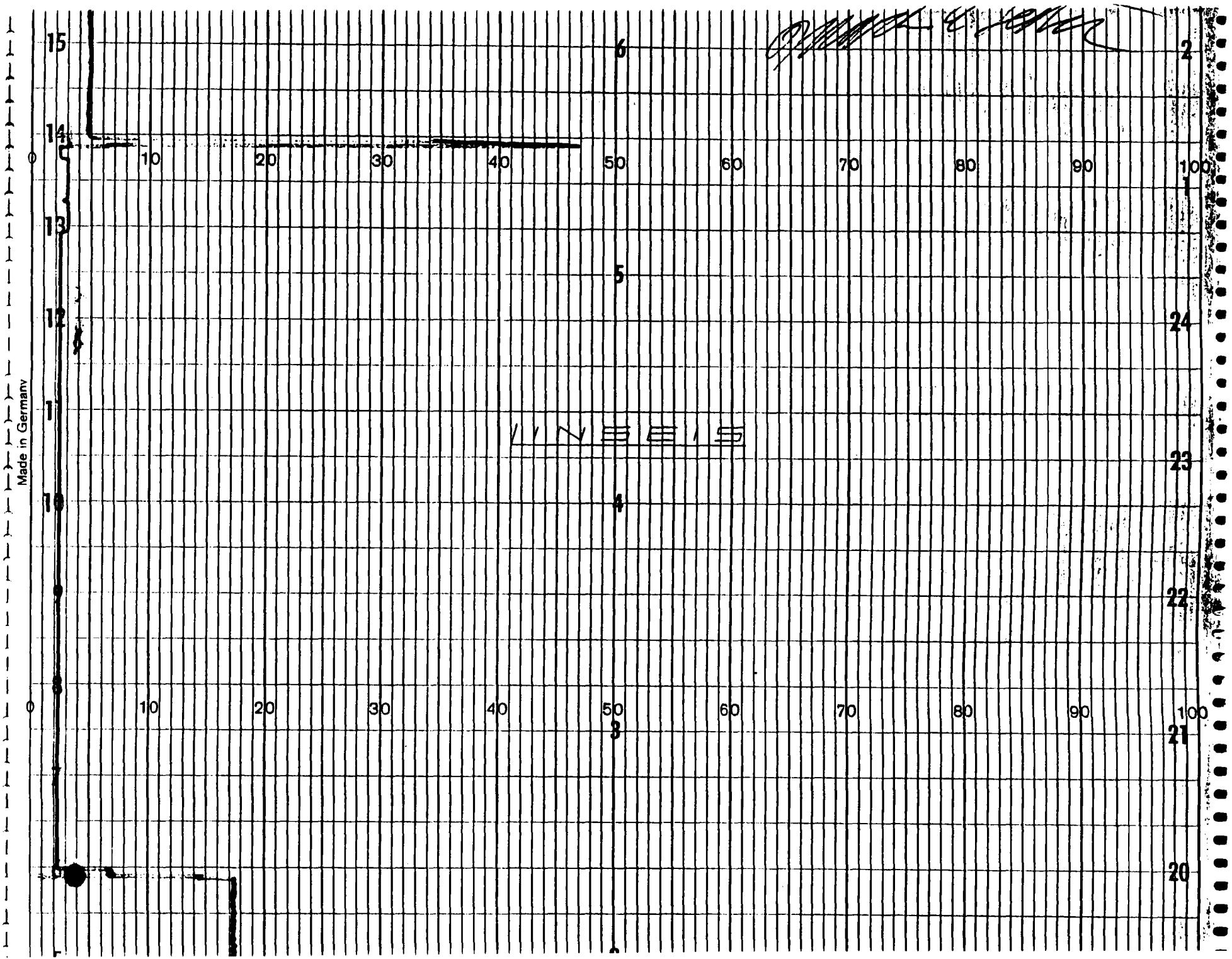
15
14
13
12
11
10
9
8
7
6
5
4
3
2
1
0
10
20
30
40
50
60
70
80
90
100
24
23
22
21
20
LINEIS
Made in Germany

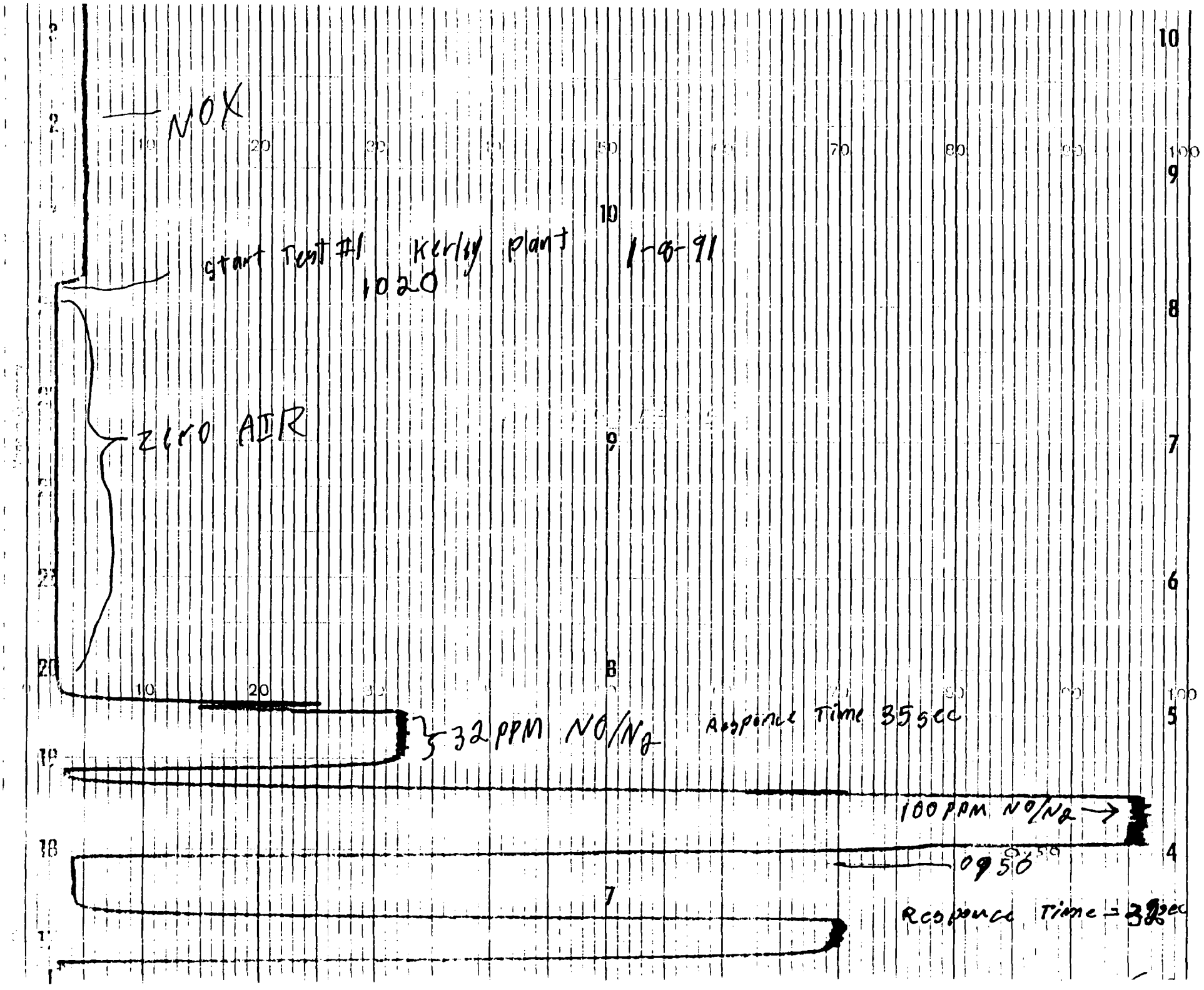
NOX
start Test #1 Kerley plant 1-9-91
1020
zero AIR
32 PPM NO/N2
Response Time 35sec
100 PPM NO/N2 →
0950
Response Time = 32sec

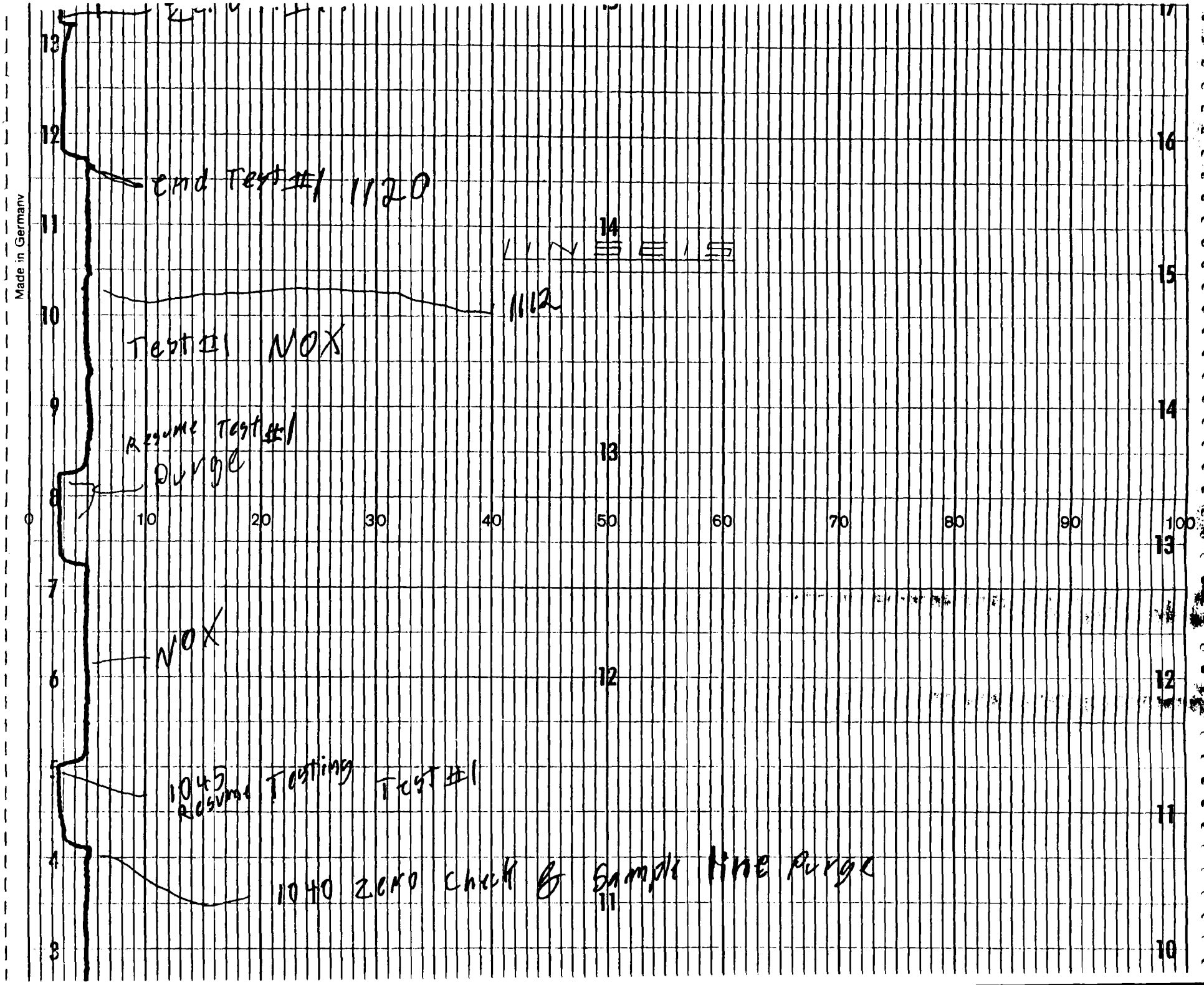
End Test #1 1120
1112
Test #1 NOX
Resume Test #1
Purge
NOX
1045 Resume Testing Test #1
1040 Zero Check & Sample Line Purge
Made in Germany

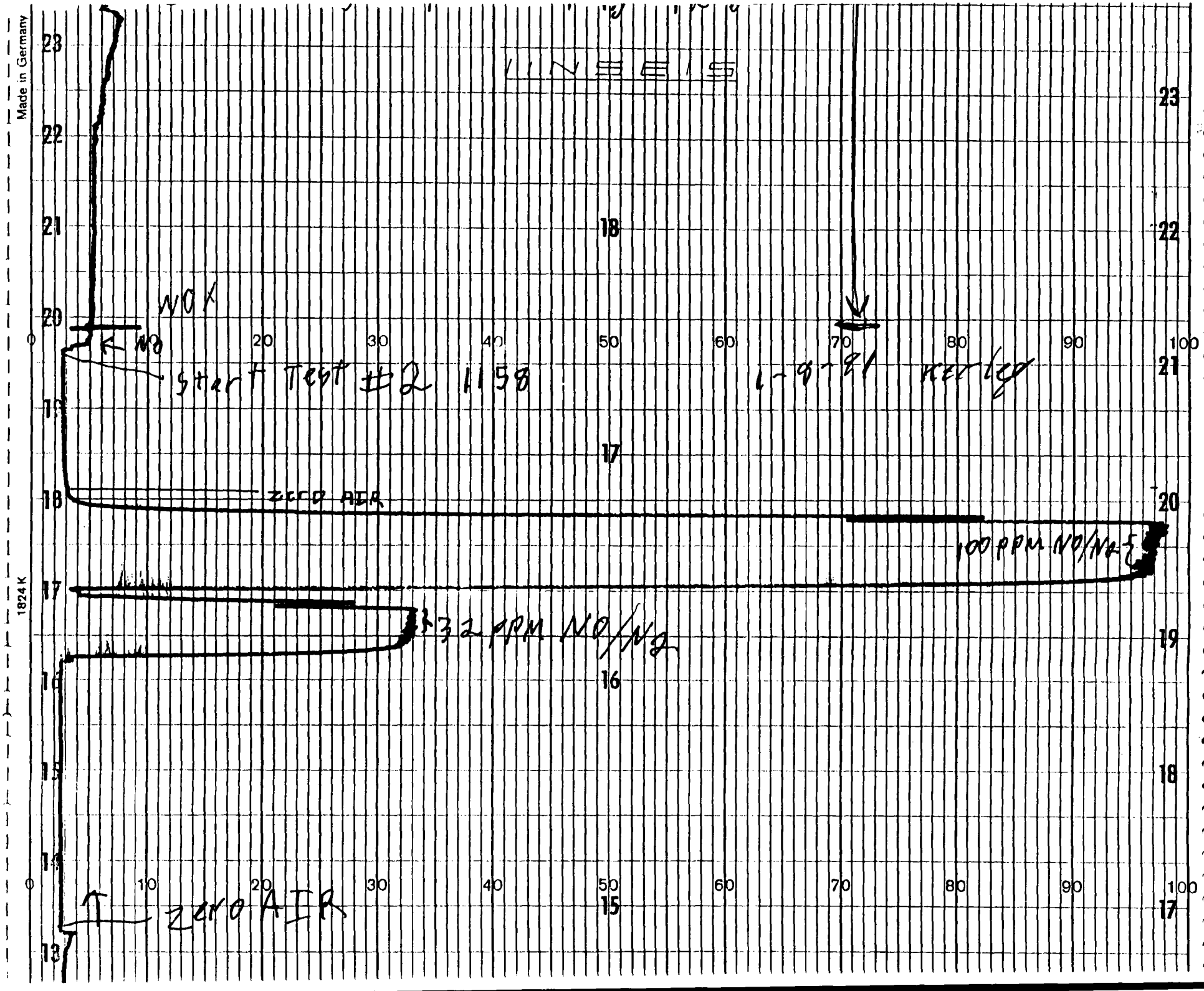
Made in Germany
1824 K
LINEIS
NOx
NO
Start Test #2 1158
1-9-81
zero AIR
100 PPM NO/N2
32 PPM NO/N2
zero AIR

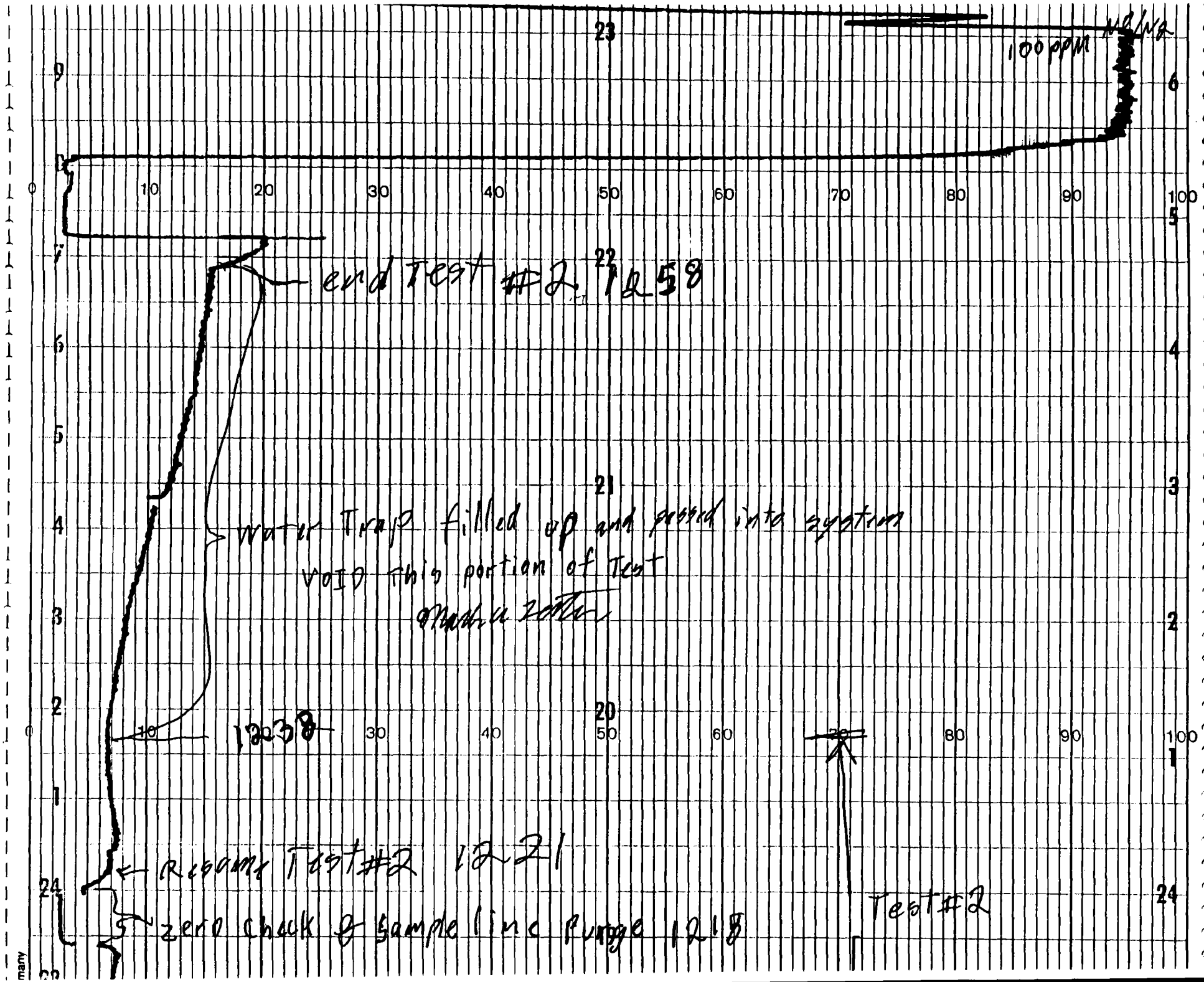
100 ppm
end Test #2 12:58
water Trap filled up and passed into system
void this portion of Test
12:38
Resume Test #2 12:21
zero check & sample line purge 12:18
Test #2

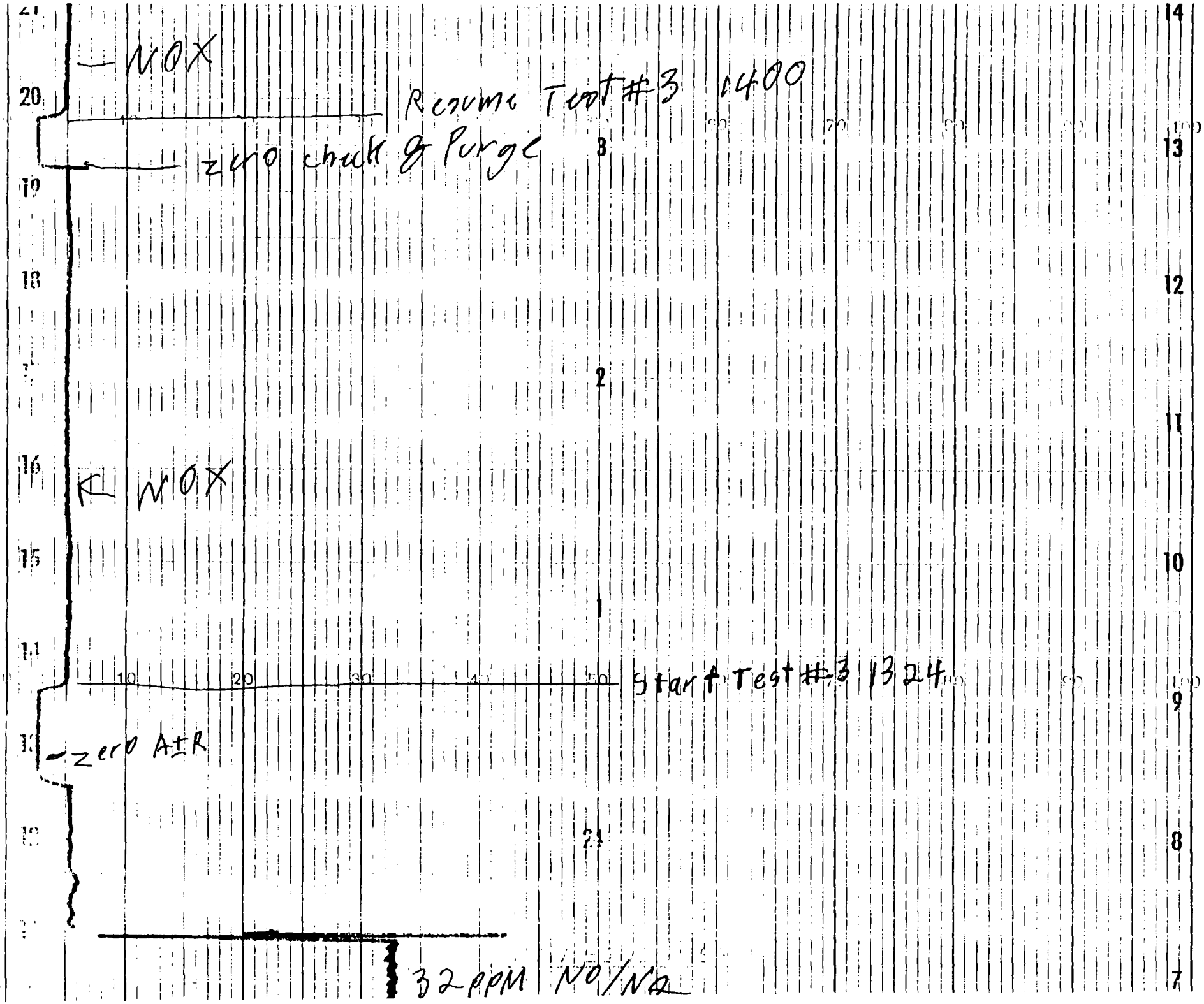
NOX
Resume Test #3 1400
zero check & Purge
NOX
Start Test #3 1324
zero A±R
32 ppm NO/NO2

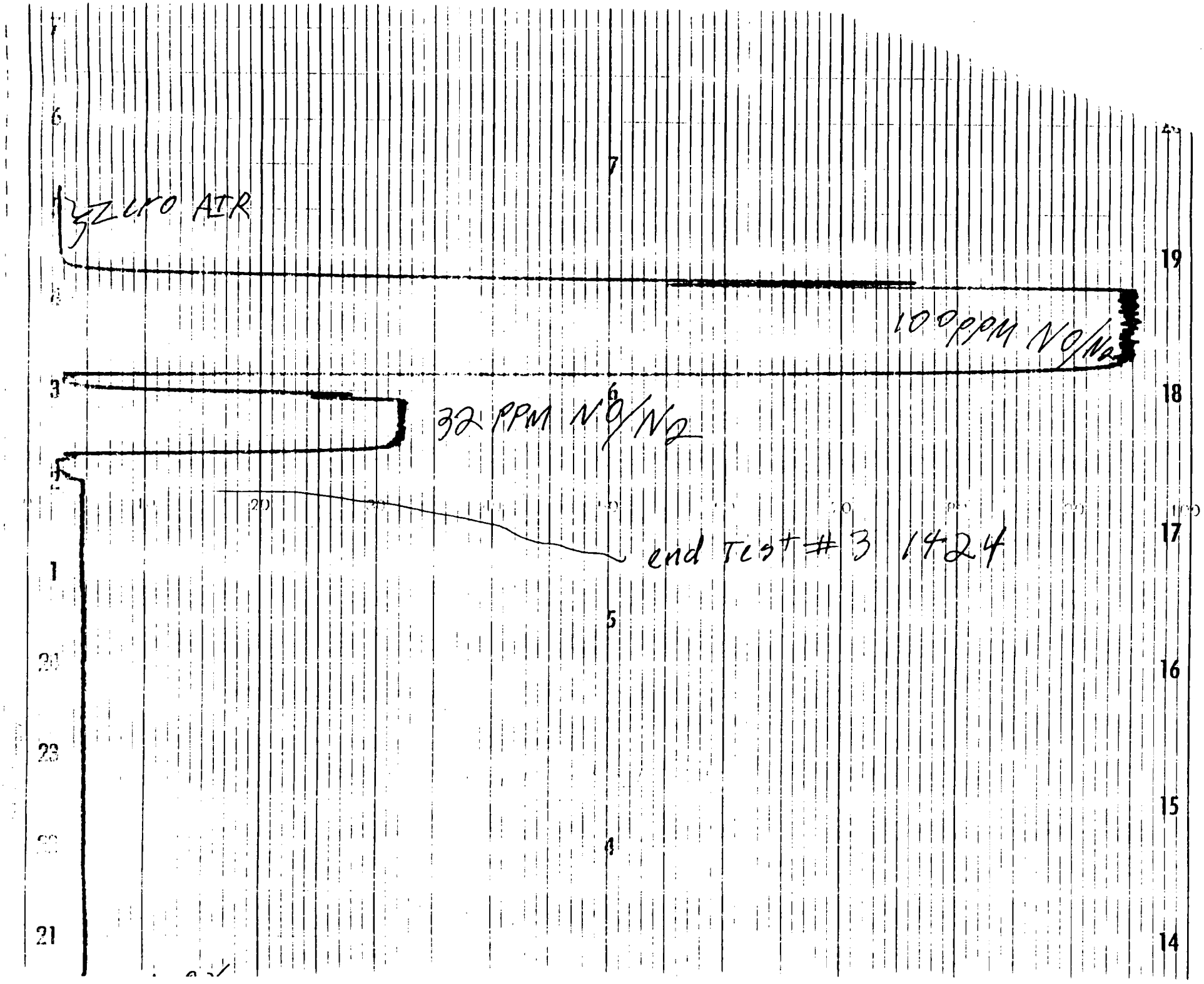
ZERO AIR
100 PPM NO/N2
32 PPM NO/N2
end Test #3 1424

APPENDIX C

CALCULATIONS

NUS CALCULATION SPREADSHEET - KERLEY FACILITY - 08/JAN/91

CLIENT	SOURCE	DATE	TEST NO.	PETODE CORECTION FACTOR	STACK PRESSURE "H2O	BAROM. PRESSURE "Hg
Kerley Pasedena Texas	AMMONIUM THIOSULF. FACILITY	1/8/1991	1	0.99	2.8	30.15

DELTA P "H2O	STACK TEMP. F	SQUAROOT DELTA P	AVERAGE SQUAROOT DELTA P	(DGMCF) 0.979	STACK DIAMETER INCHES
3.75	107	1.9365	1.7631		8
3.7	107	1.9235			
2.35	107	1.533			
3	106	1.7321			
3.35	106	1.8303			
3.6	107	1.8974			
2.9	109	1.7029			
2.4	108	1.5492			
		0			
		0			
		0			
		0			
		0			
		0			
		0			
		0			
		0			
		0			
		0			
		0			
		0			
		0			
		0			
		0			
		0			
		0			

AVG TEMP STACK(TS) DEG.(F)	COMMENT
107	MOISTURE DATA IS FROM SOX TEST #1

ORSAT DAT	RUN A	RUN B	RUN C
%CO2	0	0	0
%O2	3.8	3.8	3.8
%CO	0	0	0

TOTAL H2O GAIN(TWG)	GAS METER START(CF)	GAS METER END (CF)	NET VOLUME(CF)
6.7	915.48	928.71	13.23

DRY GAS M INLET	TER TEMP. OUTLET	AVG.METER TEMP (F)	STANDARD VOL.(VMS)
46	46	47	13.602
46	48		
47	49		
47	49		

AVG. DELTA (H)
0.3

NUS CALCULATION SPREADSHEET - KERLEY FACILITY - 08/JAN/91

CLIENT	SOURCE	DATE	TEST NO.	SUBJECT
Kerley	AMMONIUM	1/8/1991	1	FLOW
Pasedena	THIOSULF.	---	---	CALCULATION
Texas	FACILITY	---	---	

```
                                    (SQUAROOT)  (          SQUAROOT            )
  (Vs)   = (85.49)  X   (Cp)     X(DELTA P ) X(   (TS)  /  (MWSG   X  Ps) )
                                                (          SQUAROOT            )
  (Vs)   =    85.49 X      0.99 X    1.7631 X     567 /   27.919 X   30.36

  (Vs)   =      122  FEET PER SECOND

 (ACFM)  =   (Vs)   X   (60)    X   (As)

 (ACFM)  =      122 X        60 X    0.3491

 (ACFM)  =     2555

(DSCF/hr)=  (ACFM)  X   (60)    X(1-H2O/100)X(528/Ts) X(Ps/29.92)

(DSCF/hr)=     2555 X        60 X     0.977 X   0.931 X    1.015

(DSCF/hr)=   141531

          (%H2O/100)X     1          (18)
         +(%CO2/100)X(1-H2O/100)X    (44)
 (MWSG)= +(% O2/100)X(1-H2O/100)X    (32)
         +(% CO/100)X(1-H2O/100)X    (28)
         +(% N2/100)X(1-H2O/100)X    (28)

             0.023 X     1          (18)
         +       0 X     0.977 X    (44)
 (MWSG)= +   0.038 X     0.977 X    (32)
         +       0 X     0.977 X    (28)
         +   0.962 X     0.977 X    (28)

 (MWSG)  =   27.919

(%MOIST.)=((0.04707)X(TWG)X100 )/ (   (VMS)  +(0.04707)X (TWG)   )

(%MOIST.)=  0.04707 X       670 /    13.602 + 0.04707 X      6.7

(%MOIST.)=      2.3
```

NUS CALCULATION SPREADSHEET - KERLEY FACILITY - 08/JAN/91

CLIENT	SOURCE	DATE	TEST NO.	SUBJECT
Kerley	AMMONIUM	1/8/1991	1	NOX
Pasedena	THIOSULF.	---	---	CALCULATION
Texas	FACILITY	---	---	

CALIBRATION				SAMPLE	START	END
	INITIAL	FINAL		CHART	TIME OF	TIME OF
CON.(PPM)	CHT.UNITS	CHT.UNITS	(CF)	UNITS	SAMPLE	SAMPLE
ZERO	2.5	2.7	NA	5	1020	1030
32	32.3	32.8	1.077441	5	1030	1040
100	95.8	97	1.072961	5	1040	1050
			0	5	1050	1100
			0	5	1100	1210
			0	5	1210	1220

(CF) = (CON.)/ (CHT.UNITS-ZERO)

AVG(CF) =1.075201

NOX CONC.=(AVG.CHT.UN.)X(CF)

NOX CONC.= 5.4 PPM

MOLE.CF =PPM(10 EXP-6) X lb PER CU.FT.PER M.W.UNIT AT 68 F(2.6 EXP-3)

NOX lb/HR= (PPM) X(DSCF/HR)X(NO2 M.W.)X(MOLE.CF)

NOX lb/HR= 5.4 X 141531 X 46.01 X 2.6 EXP-9

NOX lb/HR= 0.091

NUS CALCULATION SPREADSHEET - KERLEY FACILITY - 08/JAN/91

CLIENT	SOURCE	DATE	TEST NO.	SUBJECT
Kerley Pasedena Texas	AMMONIUM THIOSULF. FACILITY	1/8/1991	1	SOX CALCULATION

DRY GAS METER TEMP. INLET	OUTLET	TOTAL H2O GAIN(TWG)	GAS METER START(CF)	GAS METER END (CF)	NET VOLUME	(DGMCF)
46	46	6.7	915.48	928.71	13.23	0.979
46	48					
47	49	AVG.METER TEMP (F)	STANDART VOL.(VMS)	AVG. DELTA (H)		
47	49	47	13.602	0.3		

RUN #	1ST IMP. 80%IPA gm OF SO3	2ND IMP. 6%H2O2 gm OF SO2	3ND IMP. 6%H2O2 gm OF SO2	BLANK 6%H2O2 gm OF SO2	BLANK 80%IPA gm OF SO3
A	0.0003	0.0012	0.0005	0.0004	0.0003
B	0.0006	0.0011	0.0006	0.0002	0.0003
C	0.0005	0.0012	0.0006	0.0004	0.0003
AVG.	0.0005	0.0012	0.0006	0.0003	0.0003
-BLANK	0.0002	0.0009	0.0003		

SO3 lb/HR= (gm SO3 / 453.6) X(DSCF/HR / (VMS))

SO3 lb/HR= 0.0002 / 453.6 X 141531 / 13.602

SO3 lb/HR= 0.005

SO2 lb/HR= (gm SO2 / 453.6) X(DSCF/HR / (VMS))

SO2 lb/HR= 0.0012 / 453.6 X 141531 / 13.602

SO2 lb/HR= 0.028

SOX lb/HR=(SO2+SO3)

SOX lb/HR= 0.033

PPM SO2 =SO2 lb/HR/ (MOL.W X DSCF/HR X 2.6 EXP-9)

PPM SO2 = 0.028 / 64 X 141531 X 2.6 EXP-9

PPM SO2 = 1.2 PPM SO3 = 0.2

PPM SOX = 1.4

NUS CALCULATION SPREADSHEET - KERLEY FACILITY - 08/JAN/91

CLIENT	SOURCE	DATE	TEST NO.	SUBJECT
Kerley Pasedena Texas	AMMONIUM THIOSULF. FACILITY	1/8/1991	1	NH3 CALCULATION

DRY GAS METER TEMP. INLET	OUTLET	TOTAL H2O GAIN(TWG)	GAS METER START(CF)	GAS METER END (CF)	NET VOLUME
48	50	8.7	931.786	941.41	9.624
49	51				
49	53	AVG.METER TEMP (F)	STANDART VOL.(VMS)	AVG. DELTA (H)	(DGMCF)
50	52	50	9.837	0.3	0.979

1ST IMP. FINAL VOL.	1ST IMP. .1N H2SO4 mg/L NH3	1ST IMP. TOTAL gm OF NH3	1ST IMP. gm OF NH3 -BLANK
274.7	1.3	0.000357	0.000357

2ND IMP. FINAL VOL.	2ND IMP. .1N H2SO4 mg/L NH3	2ND IMP. TOTAL gm OF NH3	2ND IMP. gm OF NH3 -BLANK
268.3	0	0	0

BLANK .1N H2SO4 VOL.	BLANK .1N H2SO4 mg/L NH3	BLANK TOTAL gm OF NH3
200	0	0

TOTAL gm OF NH3 -BLANK
0.000357

NH3 lb/HR= (gm NH3 / 453.6) X(DSCF/HR / (VMS))

NH3 lb/HR=0.000357 / 453.6 X 141531 / 9.837

NH3 lb/HR= 0.011

PPM NH3 =NH3 lb/HR/ (MOL.W X DSCF/HR X 2.6 EXP-9)

PPM NH3 = 0.011 / 17 X 141531 X 2.6 EXP-9

PPM NH3 = 1.8

NUS CALCULATION SPREADSHEET - KERLEY FACILITY - 08/JAN/91

CLIENT	SOURCE	DATE	TEST NO.	PETODE CORECTION FACTOR	STACK PRESSURE "H2O	BAROM. PRESSURE "Hg
Kerley Pasedena Texas	AMMONIUM THIOSULF. FACILITY	1/8/1991	2	0.99	2.8	30.15

DELTA P "H2O	STACK TEMP. F	SQUAROOT DELTA P	AVERAGE SQUAROOT DELTA P	(DGMCF) 0.979	STACK DIAMETER INCHES
3.3	106	1.8166	1.764		8
3.6	106	1.8974			
3	105	1.7321			
2.85	107	1.6882			
3.8	107	1.9494			
3.55	106	1.8841			
2.65	105	1.6279			
2.3	105	1.5166			
		0			
		0			
		0			
		0			
		0			
		0			
		0			
		0			
		0			
		0			
		0			
		0			
		0			
		0			
		0			
		0			
		0			
		0			

AVG TEMP STACK(TS) DEG.(F)	COMMENT
106	MOISTURE DATA IS FROM SOX TEST #2

ORSAT DATA		RUN A	RUN B	RUN C
%CO2	=	0	0	0
%O2	=	4	3.9	4
%CO	=	0	0	0

TOTAL H2O GAIN(TWG)	GAS METER START(CF)	GAS METER END (CF)	NET VOLUME(CF)
6.3	943.952	954	10.048

DRY GAS METER TEMP. INLET	OUTLET	AVG.METER TEMP (F)	STANDARD VOL.(VMS)
50	53	52	10.231
51	55		
51	54		
51	54		

AVG. DELTA (H)
0.35

NUS CALCULATION SPREADSHEET - KERLEY FACILITY - 08/JAN/91

CLIENT	SOURCE	DATE	TEST NO.	SUBJECT
Kerley	AMMONIUM	1/8/1991	2	FLOW
Pasedena	THIOSULF.	---	---	CALCULATION
Texas	FACILITY	---	---	

```
                                        (SQUAROOT)  (          SQUAROOT          )
 (Vs)    = (85.49)  X   (Cp)    X(DELTA P ) X(   (TS)  /  (MWSG   X  Ps) )
                                                (          SQUAROOT          )
 (Vs)    =    85.49 X      0.99 X     1.764 X     566 /   27.876 X   30.36

 (Vs)    =    122.1  FEET PER SECOND

(ACFM)   =   (Vs)   X   (60)    X   (As)

(ACFM)   =    122.1 X        60 X    0.3491

(ACFM)   =     2558

(DSCF/hr)=  (ACFM)  X   (60)    X(1-H2O/100)X(528/Ts) X(Ps/29.92)

(DSCF/hr)=     2558 X        60 X     0.972 X   0.933 X    1.015

(DSCF/hr)=   141275

          (%H2O/100)X     1          (18)
         +(%CO2/100)X(1-H2O/100)X    (44)
 (MWSG)= +(% O2/100)X(1-H2O/100)X    (32)
         +(% CO/100)X(1-H2O/100)X    (28)
         +(% N2/100)X(1-H2O/100)X    (28)

              0.028 X     1          (18)
         +        0 X     0.972 X    (44)
 (MWSG)= +     0.04 X     0.972 X    (32)
         +        0 X     0.972 X    (28)
         +     0.96 X     0.972 X    (28)

(MWSG)   =   27.876

(%MOIST.)=((0.04707)X(TWG)X100 )/ (   (VMS)  +(0.04707)X (TWG)   )

(%MOIST.)=  0.04707 X       630 /    10.231 + 0.04707 X      6.3

(%MOIST.)=      2.8
```

NUS CALCULATION SPREADSHEET - KERLEY FACILITY - 08/JAN/91

CLIENT	SOURCE	DATE	TEST NO.	SUBJECT
Kerley Pasedena Texas	AMMONIUM THIOSULF. FACILITY	1/8/1991	2	NOX CALCULATION

CALIBRATION CON.(PPM)	INITIAL CHT.UNITS	FINAL CHT.UNITS	(CF)	SAMPLE CHART UNITS	START TIME OF SAMPLE	END TIME OF SAMPLE
ZERO	2.7	2.8	---	5.1	1158	1208
32	32.8	32.5	1.064892	5.9	1208	1218
100	97	94.6	1.061008	7	1218	1228
			0	7	1228	1238
			0			
			0			

(CF) = (CON.)/ (CHT.UNITS- ZERO)
AVG(CF) = 1.06295

NOX CONC.=(AVG.CHT.UN.)X(CF)

NOX CONC.= 6.6 PPM

MOLE.CF =PPM(10 EXP-6) X lb PER CU.FT.PER M.W.UNIT (2.6 EXP-3)

NOX lb/HR= (PPM) X(DSCF/HR)X(NO2 M.W.)X(MOLE.CF)

NOX lb/HR= 6.6 X 141275 X 46.01 X 2.6 EXP-9

NOX lb/HR= 0.112

NUS CALCULATION SPREADSHEET - KERLEY FACILITY - 08/JAN/91

CLIENT	SOURCE	DATE	TEST NO.	SUBJECT
Kerley Pasedena Texas	AMMONIUM THIOSULF. FACILITY	1/8/1991	2	SOX CALCULATION

DRY GAS METER TEMP. INLET	OUTLET	TOTAL H2O GAIN(TWG)	GAS METER START(CF)	GAS METER END (CF)	NET VOLUME	(DGMCF)
50	53	6.3	943.952	954	10.048	0.979
51	55					
51	54	AVG.METER TEMP (F)	STANDART VOL.(VMS)	AVG. DELTA (H)		
51	54	52	10.231	0.35		

RUN #	1ST IMP. 80%IPA gm OF SO3	2ND IMP. 6%H2O2 gm OF SO2	3ND IMP. 6%H2O2 gm OF SO2	BLANK 6%H2O2 gm OF SO2	BLANK 80%IPA gm OF SO3
A	0.0006	0.0017 *	0.0007 *	0.0004 *	0.0003
B	0.0006	0.0021 *	0.0007 *	0.0002 *	0.0003
C	0.0005	0.002 *	0.001 *	0.0004 *	0.0003
AVG.	0.0006	0.0019 *	0.0008 *	0.0003 *	0.0003
-BLANK	0.0003	0.0016 *	0.0005 *	*	

SO3 lb/HR= (gm SO3 / 453.6) X(DSCF/HR / (VMS))

SO3 lb/HR= 0.0003 / 453.6 X 141275 / 10.231

SO3 lb/HR= 0.009

SO2 lb/HR= (gm SO2 / 453.6) X(DSCF/HR / (VMS))

SO2 lb/HR= 0.0021 / 453.6 X 141275 / 10.231

SO2 lb/HR= 0.064

SOX lb/HR=(SO2+SO3)

SOX lb/HR= 0.073

PPM SO2 =SO2 lb/HR/ (MOL.W X DSCF/HR X 2.6 EXP-9)

PPM SO2 = 0.064 / 64 X 141275 X 2.6 EXP-9

PPM SO2 = 2.7 PPM SO3 = 0.3

PPM SOX = 3

NUS CALCULATION SPREADSHEET - KERLEY FACILITY - 08/JAN/91

CLIENT	SOURCE	DATE	TEST NO.	SUBJECT
Kerley Pasedena Texas	AMMONIUM THIOSULF. FACILITY	1/8/1991	2	NH3 CALCULATION

DRY GAS METER TEMP. INLET	OUTLET	TOTAL H2O GAIN(TWG)	GAS METER START(CF)	GAS METER END (CF)	NET VOLUME
51	52	7.4	955.63	965.838	10.208
51	54				
51	55	AVG.METER TEMP (F)	STANDART VOL.(VMS)	AVG. DELTA (H)	(DGMCF)
52	54	53	10.374	0.36	0.979

1ST IMP. FINAL VOL.	1ST IMP. .1N H2SO4 mg/L NH3	1ST IMP. TOTAL gm OF NH3	1ST IMP. gm OF NH3 -BLANK
271.5	3.7	0.001005	0.001005

2ND IMP. FINAL VOL.	2ND IMP. .1N H2SO4 mg/L NH3	2ND IMP. TOTAL gm OF NH3	2ND IMP. gm OF NH3 -BLANK
268.3	0.1	2.68E-05	2.68E-05

BLANK .1N H2SO4 VOL.	BLANK .1N H2SO4 mg/L NH3	BLANK TOTAL gm OF NH3	TOTAL gm OF NH3 -BLANK
200	0	0	0.001031

NH3 lb/HR= (gm NH3 / 453.6) X(DSCF/HR / (VMS))

NH3 lb/HR=0.001031 / 453.6 X 141275 / 10.374

NH3 lb/HR= 0.031

PPM NH3 =NH3 lb/HR/ (MOL.W X DSCF/HR X 2.6 EXP-9)

PPM NH3 = 0.031 / 17 X 141275 X 2.6 EXP-9

PPM NH3 = 5

NUS CALCULATION SPREADSHEET - KERLEY FACILITY - 08/JAN/91

CLIENT	SOURCE	DATE	TEST NO.	PETODE CORECTION FACTOR	STACK PRESSURE "H2O	BAROM. PRESSURE "Hg
Kerley Pasedena Texas	AMMONIUM THIOSULF. FACILITY	1/8/1991	3	0.99	2.8	30.15

DELTA P "H2O	STACK TEMP. F	SQUAROOT DELTA P	AVERAGE SQUAROOT DELTA P	(DGMCF)	STACK DIAMETER INCHES
3.3	115	1.8166	1.755	0.979	8
3.5	115	1.8708			
3	114	1.7321			
2.7	113	1.6432			
3.7	114	1.9235			
3.6	116	1.8974			
2.8	115	1.6733			
2.2	115	1.4832			
		0			
		0			
		0			
		0			
		0			
		0			
		0			
		0			
		0			
		0			
		0			
		0			
		0			
		0			
		0			
		0			
		0			

AVG TEMP STACK(TS) DEG.(F)	COMMENT
115	MOISTURE DATA IS FROM SOX TEST #3

ORSAT DAT	RUN A	RUN B	RUN C
%CO2	0	0	0.1
%O2	4.2	4.2	4.1
%CO	0	0	0

TOTAL H2O GAIN(TWG)	GAS METER START(CF)	GAS METER END (CF)	NET VOLUME(CF)
6.8	966.977	977.155	10.178

DRY GAS M INLET	TER TEMP. OUTLET	AVG.METER TEMP (F)	STANDARD VOL.(VMS)
52	54	53	10.344
52	54		
52	55		
52	54		

AVG. DELTA (H)
0.36

NUS CALCULATION SPREADSHEET - KERLEY FACILITY - 08/JAN/91

CLIENT	SOURCE	DATE	TEST NO.	SUBJECT
Kerley	AMMONIUM	1/8/1991	3	FLOW
Pasedena	THIOSULF.	---	---	CALCULATION
Texas	FACILITY	---	---	

```
                                   (SQUAROOT)  (          SQUAROOT          )
  (Vs)   = (85.49)  X   (Cp)     X(DELTA P ) X(   (TS)  /  (MWSG   X  Ps) )
                                               (          SQUAROOT          )
  (Vs)   =    85.49 X      0.99 X     1.755 X     575 /   27.863 X   30.36

  (Vs)   =    122.5  FEET PER SECOND

 (ACFM)  =   (Vs)   X   (60)     X   (As)

 (ACFM)  =    122.5 X        60 X    0.3491

 (ACFM)  =     2566

(DSCF/hr)=  (ACFM)  X   (60)     X(1-H2O/100)X(528/Ts) X(Ps/29.92)

(DSCF/hr)=     2566 X        60 X      0.97 X   0.918 X    1.015

(DSCF/hr)=   139152

          (%H2O/100)X     1          (18)
         +(%CO2/100)X(1-H2O/100)X    (44)
 (MWSG)= +(% O2/100)X(1-H2O/100)X    (32)
         +(% CO/100)X(1-H2O/100)X    (28)
         +(% N2/100)X(1-H2O/100)X    (28)

               0.03 X     1          (18)
         +        0 X      0.97 X    (44)
 (MWSG)= +    0.042 X      0.97 X    (32)
         +        0 X      0.97 X    (28)
         +    0.958 X      0.97 X    (28)

 (MWSG)  =   27.863

(%MOIST.)=((0.04707)X(TWG)X100 )/ (   (VMS)  +(0.04707)X (TWG)   )

(%MOIST.)=  0.04707 X       680 /    10.344 + 0.04707 X      6.8

(%MOIST.)=        3
```

NUS CALCULATION SPREADSHEET - KERLEY FACILITY - 08/JAN/91

CLIENT	SOURCE	DATE	TEST NO.	SUBJECT
Kerley Pasedena Texas	AMMONIUM THIOSULF. FACILITY	1/8/1991	3	NOX CALCULATION

CALIBRATION				SAMPLE	START	END
CON.(PPM)	INITIAL CHT.UNITS	FINAL CHT.UNITS	(CF)	CHART UNITS	TIME OF SAMPLE	TIME OF SAMPLE
ZERO	2.8	2.5	---	6.1	1324	1334
32	32.5	32	1.072027	6.1	1334	1344
100	94.6	94.7	1.087548	6	1344	1354
			0	6	1354	1404
			0	6	1404	1414
			0	6	1414	1424

(CF) = (CON.)/ (CHT.UNITS- ZERO)

AVG(CF) =1.079787

NOX CONC.=(AVG.CHT.UN.)X(CF)

NOX CONC.= 6.5 PPM

MOLE.CF =PPM(10 EXP-6) X lb PER CU.FT.PER M.W.UNIT (2.6 EXP-3)

NOX lb/HR= (PPM) X(DSCF/HR)X(NO2 M.W.)X(MOLE.CF)

NOX lb/HR= 6.5 X 139152 X 46.01 X 2.6 EXP-9

NOX lb/HR= 0.108

NUS CALCULATION SPREADSHEET - KERLEY FACILITY - 08/JAN/91

CLIENT	SOURCE	DATE	TEST NO.	SUBJECT
Kerley	AMMONIUM	1/8/1991	3	SOX
Pasedena	THIOSULF.	---	---	CALCULATION
Texas	FACILITY	---	---	

DRY GAS METER TEMP. INLET	OUTLET	TOTAL H2O GAIN(TWG)	GAS METER START(CF)	GAS METER END (CF)	NET VOLUME	(DGMCF)
52	54	6.8	966.977	977.155	10.178	0.979
52	54					
52	55	AVG.METER TEMP (F)	STANDART VOL.(VMS)	AVG. DELTA (H)		
52	54	53	10.344	0.36		

RUN #	1ST IMP. 80%IPA gm OF SO3	2ND IMP. 6%H2O2 gm OF SO2	3ND IMP. 6%H2O2 gm OF SO2	BLANK 6%H2O2 gm OF SO2	BLANK 80%IPA gm OF SO3
A	0.0008	0.0014	0.0006	0.0004	0.0003
B	0.0008	0.0012	0.0006	0.0002	0.0003
C	0.0008	0.0012	0.0006	0.0004	0.0003
AVG.	0.0008	0.0013	0.0006	0.0003	0.0003
-BLANK	0.0005	0.001	0.0003		

SO3 lb/HR= (gm SO3 / 453.6) X(DSCF/HR / (VMS))

SO3 lb/HR= 0.0005 / 453.6 X 139152 / 10.344

SO3 lb/HR= 0.015

SO2 lb/HR= (gm SO2 / 453.6) X(DSCF/HR / (VMS))

SO2 lb/HR= 0.0013 / 453.6 X 139152 / 10.344

SO2 lb/HR= 0.039

SOX lb/HR=(SO2+SO3)

SOX lb/HR= 0.054

PPM SO2 =SO2 lb/HR/ (MOL.W X DSCF/HR X 2.6 EXP-9)

PPM SO2 = 0.039 / 64 X 139152 X 2.6 EXP-9

PPM SO2 = 1.7 PPM SO3 = 0.5

PPM SOX = 2.2

NUS CALCULATION SPREADSHEET - KERLEY FACILITY - 08/JAN/91

CLIENT	SOURCE	DATE	TEST NO.	SUBJECT
Kerley Pasedena Texas	AMMONIUM THIOSULF. FACILITY	1/8/1991	3	NH3 CALCULATION

DRY GAS METER TEMP. INLET	OUTLET	TOTAL H2O GAIN(TWG)	GAS METER START(CF)	GAS METER END (CF)	NET VOLUME
52	54	7	980.97	991.253	10.283
52	54				
53	55	AVG.METER TEMP (F)	STANDART VOL.(VMS)	AVG. DELTA (H)	(DGMCF)
53	55	54	10.43	0.36	0.979

1ST IMP. FINAL VOL.	1ST IMP. .1N H2SO4 mg/L NH3	1ST IMP. TOTAL gm OF NH3	1ST IMP. gm OF NH3 -BLANK
271.7	4.7	0.001277	0.001277

2ND IMP. FINAL VOL.	2ND IMP. .1N H2SO4 mg/L NH3	2ND IMP. TOTAL gm OF NH3	2ND IMP. gm OF NH3 -BLANK
267.5	0	0	0

BLANK .1N H2SO4 VOL.	BLANK .1N H2SO4 mg/L NH3	BLANK TOTAL gm OF NH3
200	0	0

TOTAL gm OF NH3 -BLANK
0.001277

NH3 lb/HR= (gm NH3 / 453.6) X(DSCF/HR / (VMS))

NH3 lb/HR=0.001277 / 453.6 X 139152 / 10.43

NH3 lb/HR= 0.038

PPM NH3 =NH3 lb/HR/ (MOL.W X DSCF/HR X 2.6 EXP-9)

PPM NH3 = 0.038 / 17 X 139152 X 2.6 EXP-9

PPM NH3 = 6.2

NUS CORPORATION AND SUBSIDIARIES			STANDARD CALCULATION SHEET
CLIENT: KERLEY	FILE NO.:	BY: MAL	PAGE 1 OF 1
SUBJECT: CALC		CHECKED BY: SWB .9144	DATE:

$VS \quad 85.49 \times .99 \times 1.6092 \times \sqrt{\frac{567}{28.100 \times 30.05}}$

$VS \quad 111.6$

$ACFM = 111.6 \times 60 \times \left(\frac{8}{12}\right)^2 \times 3.14 \quad .349 \quad 2337.3$

$SCFM \quad 2196.0$ Flow Test 1

$85.49 \times .99 \times 1.6617 \times \sqrt{\frac{567}{28.100 \times 30.05}}$

$VS = 115.2$

$VS = 127.4 \quad \times 60 \times .349$

$VS = 123.7$

NUS CORPORATION AND SUBSIDIARIES — STANDARD CALCULATION SHEET

CLIENT: KERLEY	FILE NO.:	BY: MAL	PAGE OF
SUBJECT: CALC		CHECKED BY: SWB	DATE: 1-8-91

	TIME
Flow Test #1 (wet) SCFM = 2186.	0815
Flow Test #2 (wet) SCFM = 2257	0839
Flow Test #13 (wet) SCFM 2586	0855
(wet) Flow Test #4 SCFM = 2424	0911

NUS CORPORATION AND SUBSIDIARIES	STANDARD CALCULATION SHEET

CLIENT: KBRWY	FILE NO.:	BY: MAL	PAGE 1 OF 1
SUBJECT: NOx calibration curve		CHECKED BY: SWB	DATE:

	standard	chart units
Initial calibration Test #1	zero	2.5
	32 PPM	32.3
	100 PPM	95.8
Final calibration Test #1	zero	2.7
	32 PPM	32.8
Initial calibration Test #2	100 PPM	97.0
Final calibration Test #2	zero	2.8
	32 PPM	32.5
Initial calibration Test #3	100 PPM	94.6
Final calibration Test #3	zero	2.5
	32 PPM	32.0
	100 PPM	94.7

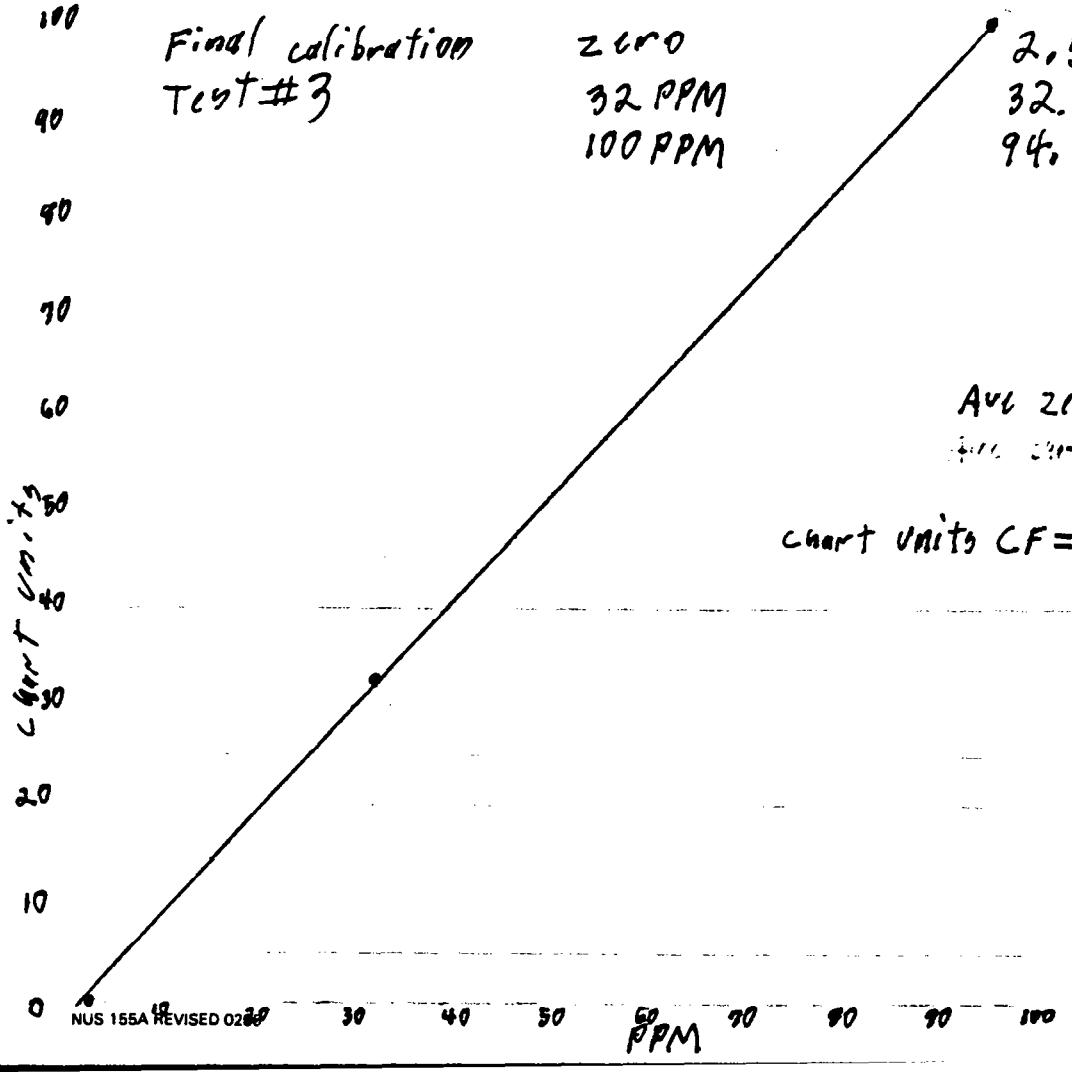

Avg zero = 2.6

chart units CF =

APPENDIX D

CALIBRATION DATA

ALPHAGAZ

DIVISION OF LIQUID AIR CORPORATION

MIXED AND SPECIALTY GASES

P.O. Box 1026
11426 Fairmont Pkwy.
La Porte, Texas 77571

Phone (713) 474-8400
Texas (800) 392-5841
USA (800) 231-7095

19 October 1990 P.O. Number: 24 34733

Customer: N U S

CERTIFICATION OF CYLINDER = AL 1609

Component	mole ppm
Nitric Oxide	100. ppm
NITROGEN	Balance

Expiration date 19 October 1991

Analyst

ALPHAGAZ

DIVISION OF LIQUID AIR CORPORATION

MIXED AND SPECIALTY GASES

P.O. Box 1026
11426 Fairmont Pkwy.
La Porte, Texas 77571

Phone (713) 474-8400
Texas (800) 392-5841
USA (800) 231-7095

19 October 1990

P.O. Number: 24 34733

Customer: N U S

CERTIFICATION OF CYLINDER = AL 1515

Component	mole ppm
Nitric Oxide	32. ppm
NITROGEN	Balance

Expiration date 19 October 1991

Analyst

NUS CORPORATION

CONTROL UNIT CALIBRATION

BOX NO. SGI #1

cal. DRY GAS METER NO. 55962

DATE 4 JAN 1990

Barometric Pressure, P_b 29.92 in. Hg

Orifice Manometer setting ΔH, in. H_2O	Gas Volume wet test meter V_w, ft^3	Gas Volume dry gas meter V_d, ft^3	Temperature: Wet Test Meter t_w, °F	Temperature: Dry Gas Meter: Inlet t_{di}, °F	Temperature: Dry Gas Meter: Outlet t_{do}, °F	Temperature: Dry Gas Meter: Average t_d, °F	Time min.-sec.	Time θ min.	Y	ΔH@
0.5	5.001	5.159	63/63	63/64	65/68	65	12:47:5	12.79	0.972	1.81
1.0	5.001	5.136	63 63	64 65	68 71	67	9:05:5	9.09	0.979	1.82
2.0	~~10.000~~	~~10.202~~	~~63 64~~	~~66 67~~	~~71 76~~	~~70~~	~~13:13:7~~	~~13.23~~	~~0.987~~	~~1.92~~
2.0	10.003	10.220	64 64	68 69	69 74	70	12:58:5	12.99	0.985	1.84
6.0										
								Average	.979	1.82

Calculations

ΔH	$\frac{\Delta H}{13.6}$	Y: $\frac{V_w P_b (t_d + 460)}{V_d \left(P_b + \frac{\Delta H}{13.6}\right)(t_w + 460)}$	ΔH@: $\frac{0.0317\ \Delta H}{P_b (t_d + 460)} \left[\frac{(t_w + 460)\theta}{V_w}\right]^2$
0.5	0.0368	$\frac{(5.001)(29.92)(65+460)}{(5.159)(29.92+0.0368)(63+460)}$ (525; 29.9568; 523)	$\frac{(.0317)(.5)}{29.92(525)}\left[\frac{(523)(12.79)}{5.001}\right]^2$
1.0	0.0736	$\frac{(5.001)(29.92)(527)}{(5.136)(29.9936)(523)}$	$\frac{(.0317)(1.0)}{29.92(527)}\left[\frac{(523)(9.09)}{5.001}\right]^2$
2.0	0.1471	$\frac{(10.000)(29.92)(530)}{(10.202)(30.0671)(524)}$	$\frac{(.0317)(2.0)}{29.92(530)}\left[\frac{(524)(13.23)}{10.000}\right]^2$
2.0 ~~1.0~~	0.1471 ~~0.0882~~	$\frac{(10.003)(29.92)(530)}{(10.220)(30.0671)(524)}$	$\frac{(.0317)(2.0)}{29.92(530)}\left[\frac{(524)(12.98)}{10.003}\right]^2$

ENVIRONMENTAL SERVICE CENTER
2525 W. BELLFORT, SUITE 150
HOUSTON, TX 77054

NUS CORPORATION

Checked By _____

APPENDIX E

NUS LABORATORY REPORT (AMMONIA)

CHAIN OF CUSTODY

NUS CORPORATION
HOUSTON ANALYTICAL LABORATORY
900 GEMINI AVENUE, CLEAR LAKE CITY
HOUSTON, TEXAS 77058-2798
713-488-1810

REPORT TO:	INVOICE TO:	☑ CHECK BOX
COMPANY NUS	COMPANY	IF INVOICE TO ADDRESS AND REPORT TO ADDRESS ARE SAME
ADDRESS 16360 Park Ten #300	ADDRESS	
CITY Houston STATE TX ZIP	CITY STATE ZIP	P.O. # 7F36AA
ATT. Steve Billito PHONE #	ATT. PHONE #	RELEASE #

PROJECT NAME/SITE NAME	CLIENT COMMENTS	NUS COMMENTS & SAMPLE #'S
Kerley 7536 AA		RECEIVED
		JAN 23 1991

WARRANTY AND LIMITATION OF LIABILITY

NUS CORPORATION
HOUSTON, TEXAS

Any service or work performed by NUS Laboratory Services Group is expressly subject to the following provision and NUS does not agree to any provision that is in conflict.

NUS Corporation (NUS) warrants that work will be performed in accordance with sound laboratory practice and accepted analytical procedures, but makes no other warranty, express or implied. NUS is solely responsible for performance of this contract, and no affiliated company, director, officer, employee, agent or subcontractor of NUS shall have any legal responsibility hereunder, whether in contract or tort, or otherwise. Liability for injury or damage to persons or property arising out of this work (other than for professional errors, omissions, or other professional negligence, which are covered by the next sentence) shall be limited to the amount covered by the general comprehensive insurance carried by NUS. In the event of error, omission, or other professional negligence or any breach of the above warranty, the sole and exclusive responsibility of NUS shall be to reperform the deficient work at its own expense, and NUS shall have no other liability whatsoever. In no event shall NUS be liable, whether in contract or tort, or otherwise for any incidental consequential or special damages including but not limited to, damages in any way connected with the use or interpretation of information or analysis provided by NUS or with action related to such use of interpretation.

	SAMPLE NUMBER	DATE	TIME	COMPOSITE	GRAB	SAMPLE SOURCE & DESCRIPTION	NUMBER CONTAINERS	REQUESTED ANALYSIS: NH3 Tot	REMARKS
1		1-8				Test 1 Imp 1		✓	Automated
2		1-8				Test 1 Imp 2		✓	colorimetric
3		1-8				Test 2 Imp 1		✓	Method
4		1-8				Test 2 Imp 2		✓	
5		1-8				Test 3 Imp 1		✓	
6		1-8				Test 3 Imp 2		✓	
7		1-8				Test 4 Blank		✓	
8									
9									
10									
11									
12									
13									
14									
15									

RELINQUISHED BY: SIGN [signature] DATE/TIME	RECEIVED BY: SIGN	RELINQUISHED BY: SIGN DATE/TIME	RECEIVED BY: SIGN
RELINQUISHED BY: SIGN DATE/TIME	RECEIVED FOR LABORATORY BY: SIGN DATE/TIME R. Kang 1-9-91 5:18	SAMPLE CONDITION	
CARRIER CO	AIR BILL NO.	CARRIER PHONE #	DATE RESULTS REPORTED BY: SIGN DATE/TIME

NUS CORPORATION

LABORATORY SERVICES DIVISION
900 GEMINI AVENUE
HOUSTON, TX 77058
713-488-1810

REMIT TO:
P.O. BOX 630832
BALTIMORE, MD 21263-0832

RECEIVED

JAN 2 2 1991

NUS CORPORATION
HOUSTON, TEXAS

January 18, 1991
Report No.: 00008205
Section A Page 1

LABORATORY ANALYSIS REPORT

CLIENT NAME: NUS CORP/KERLEY/7F360-AA)
ADDRESS: 16360 PARK 10 PLACE, #300
HOUSTON, TX 77084-
ATTENTION: STEVE BELLETO

NUS CLIENT NO: 0195 0086
WORK ORDER NO: 7F360
VENDOR NO:

SAMPLE ID: TEST 1 IMP 1
NUS SAMPLE NO: H0151225
P.O. NO.:

DATE SAMPLED: 08-JAN-91
DATE RECEIVED: 09-JAN-91
APPROVED BY: J Hogan-Sheldon

LN	TEST CODE	DETERMINATION	RESULT	UNIT
1	I032	Ammonia (N), Distillation	1.3	mg/L

COMMENTS:

NUS CORPORATION

LABORATORY SERVICES DIVISION
900 GEMINI AVENUE
HOUSTON, TX 77058
713-488-1810

REMIT TO:
P.O. BOX 630832
BALTIMORE, MD 21263-0832

January 18, 1991
Report No.: 00008205
Section A Page 2

LABORATORY ANALYSIS REPORT

CLIENT NAME: NUS CORP/KERLEY/7F360-AA)
ADDRESS: 16360 PARK 10 PLACE, #300
HOUSTON, TX 77084-
ATTENTION: STEVE BELLETO

NUS CLIENT NO: 0195 0086
WORK ORDER NO: 7F360
VENDOR NO:

SAMPLE ID: TEST 1 IMP 2
NUS SAMPLE NO: H0151226
P.O. NO.:

DATE SAMPLED: 08-JAN-91
DATE RECEIVED: 09-JAN-91
APPROVED BY: J Hogan-Sheldon

LN	TEST CODE	DETERMINATION	RESULT	UNITS
1	I032	Ammonia (N), Distillation	< 0.1	mg/L

COMMENTS:

NUS CORPORATION

LABORATORY SERVICES DIVISION
900 GEMINI AVENUE
HOUSTON, TX 77058
713-488-1810

REMIT TO:
P.O. BOX 630832
BALTIMORE, MD 21263-0832

January 18, 1991
Report No.: 00008205
Section A Page 3

LABORATORY ANALYSIS REPORT

CLIENT NAME: NUS CORP/KERLEY/7F360-AA)
ADDRESS: 16360 PARK 10 PLACE, #300
HOUSTON, TX 77084-
ATTENTION: STEVE BELLETO

NUS CLIENT NO: 0195 0086
WORK ORDER NO: 7F360
VENDOR NO:

SAMPLE ID: TEST 2 IMP 1
NUS SAMPLE NO: H0151227
P.O. NO.:

DATE SAMPLED: 08-JAN-91
DATE RECEIVED: 09-JAN-91
APPROVED BY: J Hogan-Sheldon

LN	TEST CODE	DETERMINATION	RESULT	UNITS
1	I032	Ammonia (N), Distillation	3.7	mg/L

COMMENTS:

NUS CORPORATION

LABORATORY SERVICES DIVISION
900 GEMINI AVENUE
HOUSTON, TX 77058
713-488-1810

REMIT TO:
P.O. BOX 630832
BALTIMORE, MD 21263-0832

January 18, 1991
Report No.: 00008205
Section A Page 4

LABORATORY ANALYSIS REPORT

CLIENT NAME: NUS CORP/KERLEY/7F360-AA)
ADDRESS: 16360 PARK 10 PLACE, #300
HOUSTON, TX 77084-
ATTENTION: STEVE BELLETO

NUS CLIENT NO: 0195 0086
WORK ORDER NO: 7F360
VENDOR NO:

SAMPLE ID: TEST 2 IMP 2
NUS SAMPLE NO: H0151228
P.O. NO.:

DATE SAMPLED: 08-JAN-91
DATE RECEIVED: 09-JAN-91
APPROVED BY: J Hogan-Sheldon

LN	TEST CODE	DETERMINATION	RESULT	UNITS
1	I032	Ammonia (N), Distillation	0.1	mg/L

COMMENTS:

NUS CORPORATION

LABORATORY SERVICES DIVISION
900 GEMINI AVENUE
HOUSTON, TX 77058
713-488-1810

REMIT TO:
P.O. BOX 630832
BALTIMORE, MD 21263-0832

January 18, 1991
Report No.: 00008205
Section A Page 5

LABORATORY ANALYSIS REPORT

CLIENT NAME: NUS CORP/KERLEY/7F360-AA)
ADDRESS: 16360 PARK 10 PLACE, #300
HOUSTON, TX 77084-
ATTENTION: STEVE BELLETO

NUS CLIENT NO: 0195 0086
WORK ORDER NO: 7F360
VENDOR NO:

SAMPLE ID: TEST 3 IMP 1
NUS SAMPLE NO: H0151229
P.O. NO.:

DATE SAMPLED: 08-JAN-91
DATE RECEIVED: 09-JAN-91
APPROVED BY: J Hogan-Sheldon

LN	TEST CODE	DETERMINATION	RESULT	UNITS
1	I032	Ammonia (N), Distillation	4.7	mg/L

COMMENTS:

NUS CORPORATION

LABORATORY SERVICES DIVISION
900 GEMINI AVENUE
HOUSTON, TX 77058
713-488-1810

REMIT TO:
P.O. BOX 630832
BALTIMORE, MD 21263-0832

January 18, 1991
Report No.: 00008205
Section A Page 6

LABORATORY ANALYSIS REPORT

CLIENT NAME: NUS CORP/KERLEY/7F360-AA)
ADDRESS: 16360 PARK 10 PLACE, #300
HOUSTON, TX 77084-
ATTENTION: STEVE BELLETO

NUS CLIENT NO: 0195 0086
WORK ORDER NO: 7F360
VENDOR NO:

SAMPLE ID: TEST 3 IMP 2
NUS SAMPLE NO: H0151230
P.O. NO.:

DATE SAMPLED: 08-JAN-91
DATE RECEIVED: 09-JAN-91
APPROVED BY: J Hogan-Sheldon

LN	TEST CODE	DETERMINATION	RESULT	UNITS
1	I032	Ammonia (N), Distillation	< 0.1	mg/L

COMMENTS:

NUS CORPORATION

LABORATORY SERVICES DIVISION
900 GEMINI AVENUE
HOUSTON, TX 77058
713-488-1810

REMIT TO:
P.O. BOX 630832
BALTIMORE, MD 21263-0832

January 18, 1991
Report No.: 00008205
Section A Page 7

LABORATORY ANALYSIS REPORT

CLIENT NAME: NUS CORP/KERLEY/7F360-AA)
ADDRESS: 16360 PARK 10 PLACE, #300
HOUSTON, TX 77084-
ATTENTION: STEVE BELLETO

NUS CLIENT NO: 0195 0086
WORK ORDER NO: 7F360
VENDOR NO:

SAMPLE ID: TEST 4 BLANK
NUS SAMPLE NO: H0151231
P.O. NO.:

DATE SAMPLED: 08-JAN-91
DATE RECEIVED: 09-JAN-91
APPROVED BY: J Hogan-Sheldon

LN	TEST CODE	DETERMINATION	RESULT	UNITS
1	I032	Ammonia (N), Distillation	< 0.1	mg/L

COMMENTS:

NUS CORPORATION

LABORATORY SERVICES DIVISION
900 GEMINI AVENUE
HOUSTON, TX 77058
713-488-1810

REMIT TO:
P.O. BOX 630832
BALTIMORE, MD 21263-0832

January 18, 1991
Report No.: 00008205
Section B Page 1

QUALITY CONTROL REPORT
SUPPLEMENTAL INFORMATION

			SAMPLE PREPARATION			SAMPLE ANALYSIS				
LN	TEST CODE	BATCH	LR-METHOD	DATE/TIME	ANALYST	LR-METHOD	DATE/TIME	ANALYST	ANLS BATCH	INSTRUMENT
SAMPLE ID: TEST 1 IMP 1							NUS SAMPLE NO:		H0151225	
1	I032	10550	NA			02-350.2	15-JAN-91 830	B B		300WAT

LR Method Literature Reference
02 EPA-Methods for Chemical Analysis of Water & Wastes, 1984.

SAMPLE ID: TEST 1 IMP 2							NUS SAMPLE NO:		H0151226	
1	I032	10550	NA			02-350.2	15-JAN-91 830	B B		300WAT

LR Method Literature Reference
02 EPA-Methods for Chemical Analysis of Water & Wastes, 1984.

SAMPLE ID: TEST 2 IMP 1							NUS SAMPLE NO:		H0151227	
1	I032	10550	NA			02-350.2	15-JAN-91 830	B B		300WAT

LR Method Literature Reference
02 EPA-Methods for Chemical Analysis of Water & Wastes, 1984.

SAMPLE ID: TEST 2 IMP 2							NUS SAMPLE NO:		H0151228	
1	I032	10550	NA			02-350.2	15-JAN-91 830	B B		300WAT

LR Method Literature Reference
02 EPA-Methods for Chemical Analysis of Water & Wastes, 1984.

NUS CORPORATION

LABORATORY SERVICES DIVISION
900 GEMINI AVENUE
HOUSTON, TX 77058
713-488-1810

REMIT TO:
P.O. BOX 630832
BALTIMORE, MD 21263-0832

QUALITY CONTROL REPORT
SUPPLEMENTAL INFORMATION

			SAMPLE PREPARATION			SAMPLE ANALYSIS				
LN	TEST CODE	BATCH	LR-METHOD	DATE/TIME	ANALYST	LR-METHOD	DATE/TIME	ANALYST	ANLS BATCH	INSTRUMENT
SAMPLE ID: TEST 3 IMP 1							NUS SAMPLE NO: H0151229			
1	I032	10550	NA			02-350.2	15-JAN-91 830	B B		300WAT

LR Method Literature Reference
02 EPA-Methods for Chemical Analysis of Water & Wastes, 1984.

SAMPLE ID: TEST 3 IMP 2							NUS SAMPLE NO: H0151230			
1	I032	10550	NA			02-350.2	15-JAN-91 830	B B		300WAT

LR Method Literature Reference
02 EPA-Methods for Chemical Analysis of Water & Wastes, 1984.

SAMPLE ID: TEST 4 BLANK							NUS SAMPLE NO: H0151231			
1	I032	10550	NA			02-350.2	15-JAN-91 830	B B		300WAT

LR Method Literature Reference
02 EPA-Methods for Chemical Analysis of Water & Wastes, 1984.

NUS CORPORATION

LABORATORY SERVICES DIVISION
900 GEMINI AVENUE
HOUSTON, TX 77058
713-488-1810

REMIT TO:
P.O. BOX 630832
BALTIMORE, MD 21263-0832

January 18, 1991
Report No.: 00008205
Section D Page 1

QUALITY CONTROL REPORT
LABORATORY CONTROL SAMPLE RECOVERY

TEST CODE	DETERMINATION	PERCENT RECOVERY	ACCEPTANCE LIMITS
BATCH: 10550	SAMPLE ID: Lab Control Sample		NUS SAMPLE NO: H0151801
I032	Ammonia (N), Distillation	101.7	-

NUS CORPORATION

LABORATORY SERVICES DIVISION
900 GEMINI AVENUE
HOUSTON, TX 77058
713-488-1810

REMIT TO:
P.O. BOX 830832
BALTIMORE, MD 21283-0832

January 18, 1991
Report No.: 00008205
Section E Page 1

QUALITY CONTROL REPORT
METHOD BLANK DATA

	TEST CODE	Determination	RESULT	UNITS
BATCH: 10550	SAMPLE ID:	Method Blank	NUS SAMPLE NO:	H0151802
	I032	Ammonia (N), Distillation	< 0.1	mg/L

NUS CORPORATION

LABORATORY SERVICES DIVISION
900 GEMINI AVENUE
HOUSTON, TX 77058
713-488-1810

REMIT TO:
P.O. BOX 830832
BALTIMORE, MD 21283-0832

January 18, 1991
Report No.: 00008205
Section F Page 1

QUALITY CONTROL REPORT
DUPLICATE AND MATRIX SPIKE DATA

BATCH: 10550

NUS SAMPLE NO: H0150331

TEST	DETERMINATION	ORIGINAL RESULT	DUPLICATE RESULT	UNITS	RANGE / RPD	UNITS	MS RESULT	MS % RCVRY
I032	Ammonia (N), Distillation	0.4	0.2 *	mg/L	49.26	mg/L	2.8	93.8

APPENDIX F

KERLEY FACILITY OPERATION DATA

When K25 = 3'-0" Image
K53 = 3'-0" "
K53-A = 8'-6" Outage Coil
Note:
We So we Can Trace Loss Of NH3!S.
This Is Basically for weekends & Holidays!
Check Gauges On All 3 Tanks Each Shift & Log
Continue To Log On Gauge Sheet Each Morning
@ 0700.

2315
2330
0615

1820 NH3 & SO2 < 10PPM
2100 NH3 truck unloading

1-8-91 MID 12:08

2415 TANK GAUGES ON K25-3'6" K53-47" K53A-5'2½" outage
2430 O2 = 4.0%
0845
0800 O2 = 4.0%
0630 OUTAGE IN K37 IS 5'1½"

1-8-91 MIKE + Ed
1600

TANK GAUGES 25-4-1 53-3-1 53A 5-6½
0835 Raised Amps TO 51 O2 = 4.5%
0850 Raised Amps TO 53.5 O2 = 6.5%
0910 Lower Amps TO 53 O2 = 5.5%
NEED: ABS Comp. each DAY 50 ml Sample
1520 Keep PH BETWEEN 5.3 + 5.4 Per TT (T101)
1530 Lowered Blower Amps BACK TO 51 Per TT

1-9-90 MW/DT
1615 NH3 & SO2 < 10PPM
NH3 K 25 = 3'3"
1830 O2 = 4.5%
1900 BFW LCV Running wide Open & IV wide

DATE: 1-28-91

	T-101				T-102			BOILER	T-101
	Ph		S.G.		Ph		S.G.	EXIT	EXIT
TIME	Probe	MAN.	Meter	MAN	Probe	MAN	MAN	TEMP °F	TEMP °F
0800									
0900	5.63	5.75	1.356	1.362	7.12	7.19	1.022	660	94
1000	5.61	5.51	1.360	1.365	6.80	6.88	1.022	660	95
1100									
1200	5.53	5.36	1.357	1.366	7.08	7.00	1.024	670	96
1300	5.51	5.30	1.356	1.365	6.92	6.86	1.026	670	96
1400									
1500	5.55	5.59	1.358	1.366	7.22	7.11	1.034	670	97
1600	5.52	5.11	1358	1367	7.33	7.05	1.040	675	95
1700	5.47	5.29	1360	1368	6.99	6.81	1.040	675	96
1800	5.48	5.33	1357	1367	7.13	6.93	1.040	675	96
1900	5.52	5.19	1353	1362	7.40	6.94	1.042	675	95
2000	5.57	5.41	1.360	1369	7.10	6.82	1.040	675	98
2100	5.58	5.19	1.355	1363	7.01	6.76	1.040	675	97
2200	5.64	5.43	1358	1369	7.33	7.10	1.040	680	99
2300	5.67	5.28	1356	1368	7.61	7.30	1.034	680	99
2400	5.67	5.74	1353		7.20	6.93	1.034	680	97
NOT 0130									
0230	5.45	5.52	1.357	1.364	6.73	6.88	1.034	680°	95°
0330	5.46	5.54	1.357	1.364	6.94	7.01	1.036	680	96°
0430	5.48	5.53	1.356	1.364	7.05	7.07	1.036	680	95°
0530	5.48	5.56	1.358	1.366	7.35	7.25	1.036	680°	95°
0630	5.50	5.55	1.359	1.366	7.33	7.36	1.036	680°	95

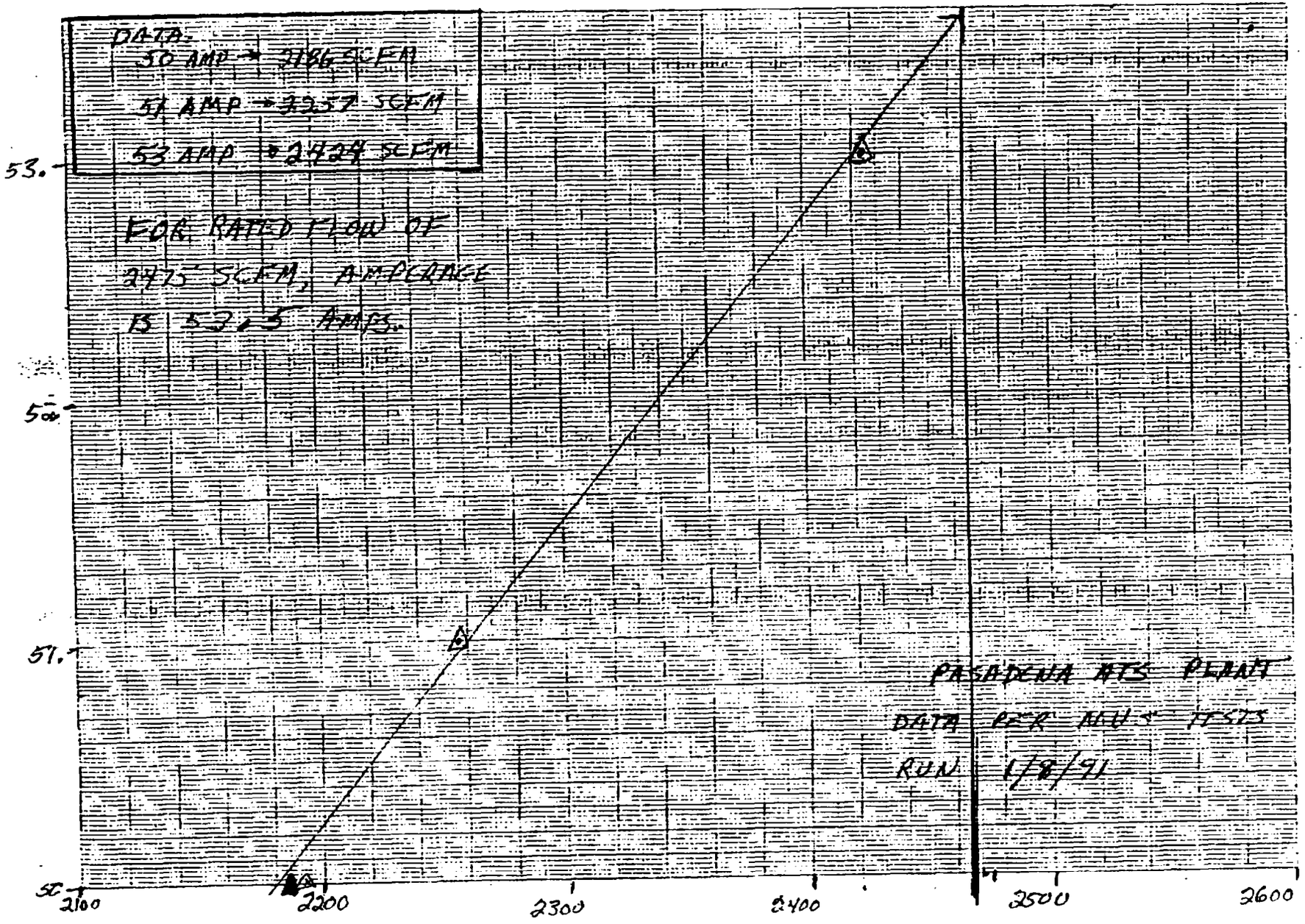
DATA:
50 AMP → 2186 SCFM
51 AMP → 2257 SCFM
53 AMP → 2424 SCFM
FOR RATED FLOW OF
2475 SCFM, AMPERAGE
IS 53.5 AMPS.
53.
52.
51.
50.
2100
2200
2300
2400
2500
2600
PASADENA ATS PLANT
DATA PER MUS TESTS
RUN 1/8/91

	Boiler			Blower			Manometers				T-101			T-102		E-102		Steam		Vapor Temp	
Time	Exit Temp		Incin. Temp	Valve set	Temp In	Temp Out	101	102	104 A	104 B	PSI	Temp		PSI	Temp	Temp In	Temp Out	PSI		101	102
0800	22	2	1657	Max 50	79	119	6 1/4	7 1/2	9	14 1/4	64	115	93	36	86	86	84	68	56	660	94
0900	22	2	1618	525	79	118	8	9 1/2	11 3/4	18 1/4	64	118	94	36	86	86	84	72	57	660	94
1000	22	2 1/4	1611	53	81	120	7 3/4	9 1/8	11 1/2	17 3/4	62	125	96	36	88	88	86	72	57	660	96
1100	21	2 1/2	1608	53	82	121	8	9	11 1/4	17 3/4	64	126	98	36	89	89	87	73	54	665	99
1200	21	2 1/2	1613	53	84	122	7 3/8	9 1/4	11 1/4	17 1/2	65	126	96	36	90	90	89	72	53	670	99
1300	22	2 1/2	1623	53	85	123	7 3/4	9	11	17 1/2	63	125	96	36	92	92	90	72	57	670	98
1500	22	2 1/2	1601	54	66	108	8 3/8	10 1/4	12 1/8	18 1/2	62	125	97	36	63	63	58	77	56	670	99
1600	22	2 1/4	1651	51	60	107	7 1/8	8	9 3/4	15 1/8	61	125	96	36.5	60	60	56	79	52	675	98
1700	22	2 1/4	1656	51	60	105	7 1/8	8 1/8	9 3/4	15	61 1/2	123	95	37	60	60	56	79	52	675	98
1800	22	2 1/4	1652	51	60	105	7	8 1/8	9 3/4	15	62	125	95	37	60	60	56	78	56	675	98
1900	22	2 1/4	1658	51	61	105	6 7/8	8	9 1/8	14 7/8	62	124	95	36 1/2	60	60	56	79	57	675	98
2000	22	2 1/4	1656	51	60	104	7	8 1/8	9 3/4	15	62	124	97	36 1/2	57	57	54	80	54	675	98
2100	22	2 1/4	1652	51	59	104	7	8 1/8	9 3/4	14 3/4	62	125	96	36 1/2	57	57	54	78	55	675	97
2200	22	2 1/4	1653	51	59	104	7	8	9 1/2	14 3/4	61	126	98	36	58	58	55	88	56	680	99
2300	22	2 1/4	1657	51	59	105	7	8	9 1/2	14 3/4	60	127	99	36	58	58	55	89	53	680	99
2400	22	2 1/4	1654	51	59	105	7	8"	9 1/2	15"	61	127	98	37	58	58	55	89	58	680	98
0100	22	2 1/4	1652	51	59	105	7"	8"	9 1/2	15"	64	126	97	37	59	59	56	88	56	680	97
0200	22	2 1/4	1650	51	59	105	7"	8"	9 1/2	15	65	126	96	37	59	59	56	89	57	680	96
0400	22	2 1/4	1648	51	59	105	7"	8"	9 1/2	15	67	126	94	37	60	60	56	89	55	680	95
0500	22	2 1/4	1654	51	59	105	7"	8"	9 1/2	15	67	126	95	37	60	60	56	88	58	680	95
0600	22	2 1/4	1656	51	59	104	7"	8 1/4	9 1/2	15	67	125	95	37	59	59	55	90	57	680	95
0700	22	2 1/4	1650	51	58	104	7"	8"	9 1/2	15	67		95	37	58	58	54	89	54	680	95

Date: 1-8-91

02 = 4.5%

2014 BFW Pumps ON

2330 - O_2 = 7.0%

0430 - O_2 = 4.0%

FROM KERLEY PRS 17134772739 1.26.1991 14:40 P. 4

B

EVALUATOR Steven Sharpe EVALUATION DATE 9/8/92

METHOD 5: SECONDARY EMISSIONS TEST REPORT EVALUATION

STATE: NC FACILITY: International Minerals & Chemicals Winston Salem NC TEST DATE: Feb 27, 28 / March 1, 2 1973

PROCESS(ES) TESTED: Phosphate fertilizer manufacture

SAMPLING DURATION 3
must have at least 3 runs, each ≥ 1 hour duration, with sampling ≥ 2 minutes at each traverse point, and total sampling volume ≥ 30 dscf

PRODUCTION RATE 2
is process or production rate during testing representative of normal rates

No Documentation

CONTROL DEVICE(S) 2
are devices described, and their efficiencies given

Scrubber, No testing at inlet

however there was testing at dryer and cooler inlet that may be used to determine eff.

METHOD 1 2
are calculations accurate, and is figure provided

METHODS 2,3 3
are data and calculations included for gas velocity, cyclonic flow, and molecular weight determination, and is source of barometric pressure noted

METHOD 4 3
are data and calculations included for moisture content determination, and is moisture content realistic (< saturation)

FIELD DATA is field data on standard forms, and does raw data correspond with printout 3

BOILER TESTS NA
calculation of ~~F factor~~ Orsat accurate

SAMPLING TEMPERATURE 3
both probe and filter must be maintained at 248 ± 25°F or other temperature specified in NSPS

BACK-HALF 3
if any, what method was used to catch and recover condensible matter

EQUIPMENT were a borosilicate glass probe liner and a glass fiber filter used 2

No Doc

CALIBRATION were both pre- and post-test calibrations performed for

meter box 2

No Doc

pitot tube 2

No Doc

temperature sensor 2

No Doc

nozzle (3 ϕ) 2

LEAK CHECKS both pre- and post-test 2

BLANKS were filter and reagent blanks analyzed, and were any problems addressed 2

SAMPLE PREP 3
filter desiccation and tare weights documented

ISOKINETICS within 100±10% for all runs 2

B

EVALUATOR Steven Sharpe EVALUATION DATE 9/8/92

Modified

METHOD 5: SECONDARY EMISSIONS TEST REPORT EVALUATION

STATE: ____ FACILITY: _____ TEST DATE: Feb 27, 28, March 1, 2 1973

PROCESS(ES) TESTED: _____

SAMPLING DURATION 3
must have at least 3 runs, each ≥ 1 hour duration, with sampling ≥ 2 minutes at each traverse point, and total sampling volume ≥ 30 dscf

PRODUCTION RATE 2
is process or production rate during testing representative of normal rates

CONTROL DEVICE(S) 2
are devices described, and their efficiencies given

METHOD 1 2
are calculations accurate, and is figure provided

METHODS 2,3 3
are data and calculations included for gas velocity, cyclonic flow, and molecular weight determination, and is source of barometric pressure noted

METHOD 4 3
are data and calculations included for moisture content determination, and is moisture content realistic (< saturation)

FIELD DATA is field data on standard forms, and does raw data correspond with printout 3

BOILER TESTS NA
calculation of fuel use accurate

SAMPLING TEMPERATURE 3
both probe and filter must be maintained at 248 ± 25°F or other temperature specified in NSPS

BACK-HALF 3
if any, what method was used to catch and recover condensible matter

Unheated filter between 3rd & 4th Imp

Testing for flourides

EQUIPMENT were a borosilicate glass probe liner and a glass fiber filter used 2

CALIBRATION were both pre- and post-test calibrations performed for

meter box 2

pitot tube 2

temperature sensor 2

nozzle (3 #) 2

LEAK CHECKS both pre- and post-test 2

BLANKS were filter and reagent blanks analyzed, and were any problems addressed 2

SAMPLE PREP 3
filter desiccation and tare weights documented

ISOKINETICS within 100±10% for all runs 2

TABLE OF CONTENTS

		Page Number(s)
I.	Introduction	1
II.	Summary and Discussion of Results	2-16
	Table I - Inlet Dryer-Particulate Summary	4
	Table II - Inlet Dryer-Particulate Summary	5
	Table III - Inlet Cooler-Particulate Summary	6
	Table IV - Inlet Cooler-Particulate Summary	7
	Table V - Outlet Scrubber-Particulate Summary	8
	Table VI - Outlet Scrubber-Particulate Summary	9
	Table VII - Inlet Dryer-Fluoride Summary	10
	Table VIII - Inlet Cooler-Fluoride Summary	11
	Table IX - Outlet Scrubber-Fluoride Summary	12
	Table X - P_2O_5 Results	13
	Table XI - Ammonia Results	14
	Table XII - Trace Metals and Mercury Analysis Results	15
	Table XIII - Analysis Results	16
III.	Process Description and Operation	17-18
IV.	Location of Sampling Points	19
V.	Sampling and Analytical Procedures	20

INTRODUCTION

Under the Clean Air Act, as amended, the Environmental Protection Agency is given the responsibility of establishing performance standards for stationary sources that contribute significantly to air pollution. A performance standard is established using the best emission reduction systems which have been shown to be operable and economically feasible.

In order that realistic performance standards can be set, accurate data on pollutant emissions must be gathered from the stationary source category under consideration. The International Minerals and Chemicals (IMC) plant in Winston-Salem, North Carolina was considered a well-controlled stationary source in the phosphate fertilizer industry and was, therefore, selected by the Office of Air Quality Planning and Standards (OAQPS) for the emission testing program.

The emission testing was conducted at the inlet to the dryer, the inlet to the cooler and the outlet of the scrubber. These sites were sampled for particulate emissions, fluorides, P_2O_5, and ammonia. The sampling was conducted by personnel from York Research and the Environmental Protection Agency on February 27 and 28, 1973, and March 1 and 2, 1973.

SUMMARY AND DISCUSSION OF RESULTS

Four particulate runs, three fluoride runs, and three ammonia runs were made at the dryer inlet, the cooler inlet, and the scrubber outlet.

Process conditions were normal for all test runs.

On February 27, 1973, one run for particulate was done at all three sites while the plant was processing 8-8-8 fertilizer. At the dryer inlet, the front half catch was 9.26 lbs/hr and the total catch 15.4 lbs/hr. At the cooler inlet, the front half catch was 17.34 lbs/hr and the total catch 18.68 lbs/hr. The front half catch at the scrubber outlet was 8.05 lbs/hr and the total catch 13.69 lbs/hr.

On February 28, 1973, the final three particulate runs were made while the plant was processing 10-10-10 fertilizer. At the dryer inlet, the front half catch ranged from 7.84 lbs/hr to 18.3 lbs/hr with an average of 14.4 lbs/hr. The total catch ranged from 10.6 lbs/hr to 20.9 lbs/hr with an average of 17.1 lbs/hr. At the cooler inlet, the front half catch ranged from 7.28 lbs/hr to 16.1 lbs/hr with an average of 12.25 lbs/hr. The total catch ranged from 8.44 lbs/hr to 17.4 lbs/hr with an average of 13.4 lbs/hr. The scrubber outlet front half catch ranged from 7.11 lbs/hr to 9.67 lbs/hr with an average of 8.04 lbs/hr. The total catch ranged from 10.9 lbs/hr to 20.4 lbs/hr with an average of 15.1 lbs/hr. Particulate summaries may be found in Tables I-VI.

On March 1, 1973, three fluoride runs were completed. At the dryer inlet, the insoluble fluorides ranged from 0.03 lbs/hr to 0.26 lbs/hr with an average of 0.11 lbs/hr. The total fluoride catch ranged from 0.06 lbs/hr to 0.34 lbs/hr with an average of 0.16 lbs/hr. At the cooler inlet, the insoluble

fluorides ranged from 0.55 lbs/hr to 0.99 lbs/hr with an average of 0.80 lbs/hr while the total catch ranged from 0.58 lbs/hr to 1.19 lbs/hr with an average of 0.90 lbs/hr. The insoluble fluorides at the scrubber outlet ranged from 0.03 lbs/hr to 0.08 lbs/hr with an average of 0.06 lbs/hr. The total fluoride catch ranged from 0.06 lbs/hr to 0.16 lbs/hr with an average of 0.11 lbs/hr. Fluoride summaries may be found in Tables VII-IX.

The P_2O_5 results which were obtained from the fluoride samples may be found in Table X.

On March 2, 1973, three ammonia runs were completed. Results of these runs may be found in Table XI.

The second fluoride run was also analyzed for trace metals and mercury. Results of this analysis may be found in Table XII.

The normal superphosphate feed and the granulated fertilizer product were analyzed for fluorides and P_2O_5. Results of these analyses may be found in Table XIII.

Table I
Inlet Dryer -Particulate Summary

Run Number	1
Date	2-27-73
Volume of Gas Sampled - DSCF[a]	65.61
Percent Moisture by Volume	6.9
Average Stack Temperature - °F	190
Stack Volumetric Flow Rate - DSCFM[b]	19,783
Stack Volumetric Flow Rate - ACFM[c]	26,568
Percent Isokinetic	98.9
Percent Excess Air	---
Percent Opacity	<20
Feed Rate - ton/hr	---
Particulates - probe, cyclone, and filter catch	
mg	232.3
gr/DSCF	0.0546
gr/ACF	0.04564
lb/hr	9.26
lb/ton feed	---
Particulates - total catch	
mg	274.5
gr/DSCF	0.0645
gr/ACF	0.4802
lb/hr	10.94
lb/ton feed	---
Percent impinger catch	15.4

[a] Dry standard cubic feet at 70°F, 29.92 in. Hg.

[b] Dry standard cubic feet per minute at 70°F, 29.92 in. Hg.

[c] Actual cubic feet per minute

Table II
Inlet Dryer
Particulate Summary

Run Number	2	3	4	Average
Date	2-28-73	2-28-73	2-28-73	
Volume of Gas Sampled - DSCF[a]	65.73	67.44	68.25	
Percent Moisture by Volume	9.1	8.4	11.6	
Average Stack Temperature - °F	181	180	180	
Stack Volumetric Flow Rate - DSCFM[b]	19,900	20,600	19,900	20,200
Stack Volumetric Flow Rate - ACFM[c]	27,100	27,700	27,700	27,500
Percent Isokinetic	98.5	97.6	102.4	99.5
Percent Excess Air	---	---	---	---
Percent Opacity	<20	<20	<20	<20
Feed Rate - ton/hr	---	---	---	---
Particulates - probe, cyclone, and filter catch				
mg	426	194	476	365
gr/DSCF	0.0997	0.0444	0.107	0.0838
gr/ACF	0.0734	0.0330	0.0770	0.0611
lb/hr	17.04	7.84	18.3	14.39
lb/ton feed	---	---	---	---
Particulates - total catch				
mg	492	264	542	433
gr/DSCF	0.115	0.0602	0.122	0.0993
gr/ACF	0.0849	0.0447	0.0878	0.0725
lb/hr	19.7	10.6	20.9	17.1
lb/ton feed	---	---	---	---
Percent impinger catch	13.5	26.3	12.3	17.4

[a] Dry standard cubic feet at 70°F, 29.92 in. Hg.

[b] Dry standard cubic feet per minute at 70°F, 29.92 in. Hg.

[c] Actual cubic feet per minute

Table III
Inlet-Cooler
Particulate Summary

Run Number	1
Date	2-27-73
Volume of Gas Sampled - DSCF[a]	103.11
Percent Moisture by Volume	0.4
Average Stack Temperature - °F	136
Stack Volumetric Flow Rate - DSCFM[b]	18,900
Stack Volumetric Flow Rate - ACFM[c]	21,820
Percent Isokinetic	91.4
Percent Excess Air	---
Percent Opacity	<20
Feed Rate - ton/hr	---
Particulates - probe, cyclone, and filter catch	
mg	715
gr/DSCF	0.107
gr/ACF	0.0927
lb/hr	17.34
lb/ton feed	---
Particulates - total catch	
mg	770.0
gr/DSCF	0.115
gr/ACF	0.0998
lb/hr	18.68
lb/ton feed	---
Percent impinger catch	7.1

[a] Dry standard cubic feet at 70°F, 29.92 in. Hg.

[b] Dry standard cubic feet per minute at 70°F, 29.92 in. Hg.

[c] Actual cubic feet per minute

Table IV
Inlet Cooler
Particulate Summary

Run Number	2	3	4	Average
Date	2-28-73	2-28-73	2-28-73	
Volume of Gas Sampled - DSCF[a]	105	105	104	
Percent Moisture by Volume	1.3	2.4	2.7	
Average Stack Temperature - °F	138	157	142	
Stack Volumetric Flow Rate - DSCFM[b]	19,700	18,600	19,000	19,000
Stack Volumetric Flow Rate - ACFM[c]	22,200	21,800	21,800	21,900
Percent Isokinetic	89.9	95.0	91.8	92.2
Percent Excess Air	---	---	---	---
Percent Opacity	<20	<20	<20	<20
Feed Rate - ton/hr	---	---	---	---
Particulates - probe, cyclone, and filter catch				
mg	653	312	553	506
gr/DSCF	0.0954	0.0458	0.0823	0.0745
gr/ACF	0.0847	0.0389	0.0714	0.0650
lb/hr	16.1	7.28	13.38	12.25
lb/ton feed	---	---	---	---
Particulates - total catch				
mg	706	362	594	554
gr/DSCF	0.103	0.0530	0.0882	0.0815
gr/ACF	0.0916	0.0451	0.0767	0.0711
lb/hr	17.4	8.44	14.4	13.4
lb/ton feed	---	---	---	---
Percent impinger catch	7.6	13.7	6.8	9.3

[a] Dry standard cubic feet at 70°F, 29.92 in. Hg.

[b] Dry standard cubic feet per minute at 70°F, 29.92 in. Hg.

[c] Actual cubic feet per minute

Table V
Outlet Scrubber
Particulate Summary

Run Number	1
Date	2-27-73
Volume of Gas Sampled - DSCF[a]	101.92
Percent Moisture by Volume	4.7
Average Stack Temperature - °F	95.3
Stack Volumetric Flow Rate - DSCFM[b]	42,200
Stack Volumetric Flow Rate - ACFM[c]	47,300
Percent Isokinetic	179
Percent Excess Air	---
Percent Opacity	<20
Feed Rate - ton/hr	---
Particulates - probe, cyclone, and filter catch	
mg	147
gr/DSCF	0.0223
gr/ACF	0.0199
lb/hr	8.05
lb/ton feed	---
Particulates - total catch	
mg	250.4
gr/DSCF	0.0378
gr/ACF	0.0338
lb/hr	13.69
lb/ton feed	---
Percent impinger catch	41.2

[a] Dry standard cubic feet at 70°F, 29.92 in. Hg.

[b] Dry standard cubic feet per minute at 70°F, 29.92 in. Hg.

[c] Actual cubic feet per minute

Table VI
Outlet Scrubber
Particulate Summary

Run Number	2	3	4	Average
Date	2-28-73	2-28-73	2-28-73	
Volume of Gas Sampled - DSCF[a]	57.95	57.72	60.49	
Percent Moisture by Volume	7.4	8.1	7.6	
Average Stack Temperature - °F	95.7	97.1	103.0	
Stack Volumetric Flow Rate - DSCFM[b]	42,000	41,300	42,600	42,000
Stack Volumetric Flow Rate - ACFM[c]	48,000	47,600	49,500	48,400
Percent Isokinetic	102.1	103.6	105.0	103.6
Percent Excess Air	---	---	---	---
Percent Opacity	<20	<20	<20	<20
Feed Rate - ton/hr	---	---	---	---
Particulates - probe, cyclone, and filter catch				
mg	101	77.7	76.4	85.0
gr/DSCF	0.0268	0.0207	0.0195	0.0223
gr/ACF	0.0235	0.0180	0.0168	0.0194
lb/hr	9.67	7.33	7.11	8.04
lb/ton feed	---	---	---	---
Particulates - total catch				
mg	213	148	117	159
gr/DSCF	0.0566	0.0396	0.0298	0.0420
gr/ACF	0.0495	0.0343	0.0256	0.0365
lb/hr	20.4	14.0	10.9	15.1
lb/ton feed	---	---	---	---
Percent impinger catch	52.6	47.6	34.6	45.0

[a] Dry standard cubic feet at 70°F, 29.92 in. Hg.

[b] Dry standard cubic feet per minute at 70°F, 29.92 in. Hg.

[c] Actual cubic feet per minute

Table VII
Inlet-Dryer
Fluoride Summary

Run Number	1	2	3	Average
Date	3-1-73	3-1-73	3-1-73	
Volume of Gas Sampled - DSCF[a]	67.9	67.55	66.8	
Percent Moisture by Volume	6.8	9.7	10.9	
Average Stack Temperature - °F	180.0	180.0	180.0	
Stack Volumetric Flow Rate - DSCFM[b]	20,600	20,100	19,600	20,100
Stack Volumetric Flow Rate - ACFM[c]	26,900	27,100	26,700	26,900
Percent Isokinetic	98.4	100.2	102.0	100.2
Percent Excess Air	---	---	---	---
Percent Opacity	<20	<20	<20	<20
Feed Rate - ton/hr	---	---	---	---
Fluoride (Insoluble)				
mg	6.50	0.70	1.30	2.83
gr/DSCF	0.00147	0.00016	0.00030	0.00064
gr/ACF	0.00113	0.00012	0.00022	0.00049
lb/hr	0.26	0.03	0.05	0.11
lb/ton feed	---	---	---	---
Fluorides - total catch				
mg	8.50	1.40	2.10	4.00
gr/DSCF	0.00193	0.00032	0.00048	0.00091
gr/ACF	0.00148	0.00024	0.00035	0.00069
lb/hr	0.34	0.06	0.08	0.16
lb/ton feed	---	---	---	---
Percent impinger catch	23.5	50.0	38.1	37.2

[a] Dry standard cubic feet at 70°F, 29.92 in. Hg.

[b] Dry standard cubic feet per minute at 70°F, 29.92 in. Hg.

[c] Actual cubic feet per minute

Table VIII
Inlet Cooler
Fluoride Summary

Run Number	1	2	3	Average
Date	3-1-73	3-1-73	3-1-73	
Volume of Gas Sampled - DSCF[a]	105	105	99.8	
Percent Moisture by Volume	0.2	2.4	2.6	
Average Stack Temperature - °F	137	139	135	
Stack Volumetric Flow Rate - DSCFM[b]	19,500	18.900	18,800	19,100
Stack Volumetric Flow Rate - ACFM[c]	22,200	22,100	21,900	22,000
Percent Isokinetic	90.6	93.5	89.0	91.0
Percent Excess Air	---	---	---	---
Percent Opacity	<20	<20	<20	<20
Feed Rate - ton/hr	---	---	---	---
Fluorides (Insoluble)				
mg	40.5	23.2	34.8	32.8
gr/DSCF	0.00593	0.00339	0.00537	0.00490
gr/ACF	0.00522	0.00291	0.00463	0.00425
lb/hr	0.99	0.55	0.87	0.80
lb/ton feed	---	---	---	---
Fluorides - total catch				
mg	48.5	24.4	36.9	36.6
gr/DSCF	0.00710	0.00357	0.00570	0.00546
gr/ACF	0.00625	0.00306	0.00490	0.00474
lb/hr	1.19	0.58	0.92	0.90
lb/ton feed	---	---	---	---
Percent impinger catch	16.5	4.9	5.7	9.0

[a] Dry standard cubic feet at 70°F, 29.92 in. Hg.

[b] Dry standard cubic feet per minute at 70°F, 29.92 in. Hg.

[c] Actual cubic feet per minute

Table IX
Outlet Scrubber
Fluoride Summary

Run Number	1	2	3	Average
Date	3-1-73	3-1-73	3-1-73	
Volume of Gas Sampled - DSCF[a]	59.0	102.0	102.0	
Percent Moisture by Volume	6.0	9.4	9.5	
Average Stack Temperature - °F	110	104	111	
Stack Volumetric Flow Rate - DSCFM[b]	41,500	41,100	41,000	41,200
Stack Volumetric Flow Rate - ACFM[c]	47,900	48,700	49,100	48,600
Percent Isokinetic	105	103	104	104
Percent Excess Air	---	---	---	---
Percent Opacity	<20	<20	<20	<20
Feed Rate - ton/hr	---	---	---	---
Fluorides (Insoluble)				
mg	0.90	0.50	1.10	0.83
gr/DSCF	0.00024	0.00008	0.00017	0.00016
gr/ACF	0.00020	0.00006	0.00014	0.00014
lb/hr	0.08	0.03	0.06	0.06
lb/ton feed	---	---	---	---
Fluorides - total catch				
mg	1.70	1.10	2.00	1.60
gr/DSCF	0.00044	0.00017	0.00030	0.00030
gr/ACF	0.00039	0.00014	0.00025	0.00026
lb/hr	0.16	0.06	0.11	0.11
lb/ton feed	---	---	---	---
Percent impinger catch	47.1	54.5	45.0	48.9

[a] Dry standard cubic feet at 70°F, 29.92 in. Hg.

[b] Dry standard cubic feet per minute at 70°F, 29.92 in. Hg.

[c] Actual cubic feet per minute

Table X

P_2O_5 Results

Inlet-Dryer

Total P_2O_5 (mg)	Water Soluble P_2O_5 (mg)	% Water Soluble
73.7	5.7	7.73
13.7	4.4	32.1
*---	23.9	---

Inlet-Cooler

Total P_2O_5 (mg)	Water Soluble P_2O_5 (mg)	% Water Soluble
651.0	446.4	68.6
340.0	129.7	38.1
570.0	908.0	62.8

Outlet-Scrubber

Total P_2O_5 (mg)	Water Soluble P_2O_5 (mg)	% Water Soluble
15	10.7	71.3
12.7	5.7	44.9
40.4	21.9	54.2

* Insoluble portion of sample lost.

Table XI

Ammonia Results

Inlet-Dryer

Run Number	mg of Ammonia	Volume (liquid ml)
8	21.3	100.0
9	19.1	110.0
10	<0.3	124.0

Inlet-Cooler

Run Number	mg of Ammonia	Volume (liquid ml)
8	2.2	94.0
9	2.9	104.0
10	1.8	100.0

Outlet-Scrubber

Run Number	mg of Ammonia	Volume of Sample
8	13.0	140.0
9	3.9	114.0
10	<0.3	132.0

Table XII

Trace Metals and Mercury Analysis Results*

Sample	Run #	Be	Cd	As	V	Mn	Ni	Sb	Cr	Zn
Impinger Contents & Water Wash	6	<0.0005	<0.03	<0.03	0.01	0.003	0.02	<0.02	0.02	<0.03
Scrubber Water	6	<0.005	<0.3	<0.3	0.2	0.05	0.1	<0.2	0.1	<0.3

Sample	Run #	Cu	Pb	Se	B	Li	Ag	Sn	Fe	Sr
Impinger Contents & Water Wash	6	<0.01	<0.01	---	0.005	<0.3	0.01	<0.01	0.1	0.02
Scrubber Water	6	<0.1	<0.1	---	0.05	<3.0	0.01	<0.1	1.0	0.4

Sample	Run #	Na	K	Ca	Si	Mg	Ba	Mercury
Impinger Contents & Water Wash	6	2.0	10	5	0.3	0.1	<0.003	<0.02
Scrubber Water	6	150.0	2200	100	3.0	2.0	<0.03	<0.05

*All numbers are in ug/ml

Table XIII

Analysis Results

Sample	Run #	Total F^-	Insoluble F^-	P_2O_5 (total)
Normal Superphosphate Feed	---	10.4 mg/gm	10.4 mg/gm	128 mg/gm
Granulated Fertilizer Product	---	11.1 mg/gm	11.1 mg/gm	190 mg/gm

EVALUATOR Cmc EVALUATION DATE 8 FEB 92

METHOD 5: SECONDARY EMISSIONS TEST REPORT EVALUATION

STATE: ____ FACILITY: _____ TEST DATE: 2/14/90

PROCESS(ES) TESTED: _____

SAMPLING DURATION 3
must have at least 3 runs, each ≥ 1 hour duration, with sampling ≥ 2 minutes at each traverse point, and total sampling volume ≥ 30 dscf

PRODUCTION RATE ____
is process or production rate during testing representative of normal rates

CONTROL DEVICE(S) ____
are devices described, and their efficiencies given

METHOD 1 3
are calculations accurate, and is figure provided

METHODS 2,3 3
are data and calculations included for gas velocity, cyclonic flow, and molecular weight determination, and is source of barometric pressure noted

METHOD 4 3
are data and calculations included for moisture content determination, and is moisture content realistic [< saturation]

FIELD DATA is field data on standard forms, and does raw data correspond with printout 3

BOILER TESTS N/A
calculation of F_0 from Orsat accurate

SAMPLING TEMPERATURE 3
both probe and filter must be maintained at 248 ± 25°F or other temperature specified in NSPS

BACK-HALF 2
if any, what method was used to catch and recover condensible matter

H_2O in impingers

recovery?

EQUIPMENT were a borosilicate glass probe liner and a quartz fiber filter used 3

CALIBRATION were both pre- and post-test calibrations performed for meter box 3

pitot tube 3

temperature sensor 3

nozzle (3 ⌀) 3

LEAK CHECKS both pre- and post-test 3

BLANKS were filter and reagent blanks analyzed, and were any problems addressed 3

SAMPLE PREP 3
filter desiccation and tare weights documented

ISOKINETICS within 100±10% for all runs 3

RECEIVED IN REPORT
06/22/92

SECTION 6.18

IDAHO DEPARTMENT OF HEALTH AND WELFARE

ID

CONTACT: TIM TEATER 208-334-050 DATE CONTACTED: /

SUMMARY:

ACTION:

DATA RECEIVED DATE RECEIVED: 03/01/92

DESCRIPTION: RECEIVED SOURCE TEST REPORT FOR J.R. SIMPLOT CO.
OF POCATELLO ,ID.

APPENDIX 1 - RESULTS AND EXAMPLE CALCULATIONS

SUMMARY OF RESULTS==========

1. **List emission results in units of standard for each location specified in INTRODUCTION, Section 1, and for each pollutant specified in Section 4.**

Dryer Stack:	Cooler Stack:
02-14-90 Particulate = .28 lb/hr	02-20-90 Particulate = 1.7 lb/hr
02-14-90 Particulate = .22 lb/hr	02-21-90 Particulate = 1.7 lb/hr
02-15-90 Particulate = .35 lb/hr	02-22-90 Particulate = 1.01 lb/hr

Result Totals/Averages as Applicable: Average from dryer = 0.28 lb/hr. Average from cooler = 1.47 lb/hr. Total particulate for Ammonium Sulfate = 1.75 lb/hr.

2. **List process data as related to compliance determination:** No process data relates to determination. Plant was operated at or near full production during all tests.

3. **List permitted emission levels for this source:** Total particulate = 5.0 lb/hr.

4. **Visible emission summary for each source listed in Section 1 above:** Visible emission evaluation performed on 2-13-90 by Norman F. Self. Cooler: Range = 0%-15%, Average = 6%. Dryer: Range = 0.5%, Average = <1%, VE form in Appendix 2.

5. **Quality assurance procedures are listed in Appendix 6.**

6. **Discussion of errors:**

SOURCE OPERATION==========

1. **Description of Process and Control Devices:** Ammonia is reacted with sulfuric acid in a crystallizer. The system is a continuous feed reactor with a slurry being withdrawn from the bottom of the reactor. The NH3 feed to the reactor is 3,225 lb/hr (10.6 gal/min) and the 93% sulfuric acid feed is 10,000 lb/hr (10.9 gal/min). The solution or mother liquor from the reactor is recirculated at 1,080 gal/min at a specific gravity of 1.25 to allow crystal growth.

A purge of 40 to 80 gal/min is taken from the bottom of the crystallizer and centrifuged to recover crystal ammonium sulfate. Filtrate is returned to the surge tank and reintroduced to the crystallizer as seed crystals.

Centrifuge cake is dried in a rotary dryer and transferred by a bucket elevator to the screens and then to storage. Fines, minus 20 mesh, are returned to the crystallizer dump tank for further crystal growth.

Particulate matter emissions from the dryer are controlled by a Venturi scrubber. The scrubber is an induced spray injector design, with a design pressure of 10 to 15 inches.

2. **There is no Process and Control Equipment Flow Diagram at the present time.**

3. **List process and control device operating parameters during test. If these parameters are out of the range of normal operating conditions, explain the difference:** The operator monitors flows of ammonia, sulfuric acid, Ammsox scrubber liquor makeup water as can be seen from daily log sheet in Appendix 4. Control device parameters at present are only the dryer fan amps. Cooler fan amps are not noted on the log sheet. Pressure drop across the Venturi scrubber is not monitored. None of the noted parameters are out of normal operating ranges.

4. **Are raw materials and products during testing the same as those during normal operations? Yes <x> No < > If No, explain the differences:** _____

5. **Were there process startups, shutdowns or other operational changes during the tests? Yes < > No <x> If Yes, explain these changes and times of start and stop:** _____

SAMPLING AND ANALYSIS PROCEDURES==========

1. See Appendix 8 for sample port locations. The stack diameter is 20 inches for both ducts.

2. The sampling point description is tabulated in Appendix 8.

3. The sampling train(s) is depicted in Appendix 8. Any changes or modifications to the approved description are noted.

4. Sampling procedures are as specified in 40 CFR, Chapter 1 (7-1-89), Appendix A, Method(s) 5 and 9.

Are there deviations to these procedures? Yes < > (No <x> If Yes, explain the deviations. _____

5. Analysis procedures are as specified in 40 CFR, Chapter 1 (7-1-89), Appendix A, Method(s) 5.

Are there deviations to these procedures? Yes < > No <x> If Yes, explain the deviations: _____

Amm Sulfate
(Dryer)
R-1
2/14/90

Method 5 Particulate Test
Calculation Form

I. Neccessary Data

A. Reference Method #1
- Area of stack 2.18 ft^2
- No. of equivalent diameters upstream _____
- No. of equivalent diameters downstream _____
- No. of traverse points 12
- Total test time (θ) 72 minutes

B. Reference Method #2
- Average stack temperature T_s 119 °F + 460 = 579 °R
- Stack absolute pressure 25.55 in. Hg.
- Barometric Pressure 25.55 in. Hg.
- $(\sqrt{\Delta p})_{ave}$ .743 (in. $H_2O)^{1/2}$

C. Reference Method #3
- %CO_2 .6 ; %O_2 13 ; %CO 0 ; %N_2 86.4

D. Reference Method #4
- Water collected
  Impinger H_2O 62 ml
  Silica Gel 16.8 gm

E. Reference Method #5 ~ 2.6×10^{-4}
- Area of nozzle _____ ft^2
- Average ΔH 1.166 in. H_2O
- Average meter temperature T_m 71 °F + 460 = 531 °R
- Dry gas meter correction factor 1.005
- Volume metered V_m = 48.496 CF
- Particulate Weight ~~.0146~~ .0194 gm

II. Calculations

A. Standard Volume Metered Y = Dry Gas Meter calibration factor

$$V_{m(std)} = V_m Y \frac{T_{std}}{P_{std}} \left(\frac{P_b + \frac{\Delta H}{13.6}}{T_m} \right) \quad \frac{1.166}{13.6}$$

$$V_{m(std)} = (48.496 \text{ CF}) \left(\frac{528 °R}{29.92 \text{ in. Hg}} \right) \left(\frac{25.64 \text{ in. Hg}}{531 \text{ °R}} \right) = 41.324 \text{ dscf}$$

B. Moisture Content of Stack Gas

1. H_2O collected in impingers in standard cubic feet

$V_{wc(std)} = K\ (V_f - V_i)$

$V_{wc} = 0.04707\ ft^3/ml\ (\underline{62}\ ml) = \underline{2.918}\ scf$

2. H_2O collected in silica gel in standard cubic feet

$V_{wsg(std)} = K\ (W_f - W_i)$

$V_{wsg(std)} = 0.04715\ ft^3/gm\ (\underline{16.8}\ gm) = \underline{.792}\ scf$

3. Moisture content of stack gas (B_{ws})

$$B_{ws} = \frac{V_{wc(std)} + V_{wsg(std)}}{V_{wc(std)} + V_{wsg(std)} + V_{m(std)}}$$

$$B_{ws} = \frac{(\underline{2.918}\ scf) + (\underline{.792}\ scf)}{(\underline{2.918}\ scf) + (\underline{.792}\ scf) + (\underline{41.324}\ scf)} = \underline{.082}$$

C. Molecular Weight of Stack Gas (lb/lb-mole)

1. M_d (Dry molecular weight) = $\Sigma M_x B_x$

$M_d = (.44)\ \underline{.6}\ \%CO_2 + (.32)\ \underline{13}\ \%O_2 +$

$(.28)\ \underline{0}\ \%CO + (.28)\ \underline{86.4}\ \%N_2 = \underline{28.62}$ lb/lb-mole

2. M_s (Wet Molecular Weight) = $M_d(1 - B_{ws}) + 18\ B_{ws}$

$M_s = \underline{28.62}\ (1 - \underline{.082}) + 18(\underline{.082}) = \underline{27.75}$ lb/lb-mole

.918

D. Average Stack Gas Velocity

$$\bar{v}_s = K_p C_p \sqrt{\frac{T_s}{P_s M_s}} \left(\sqrt{\Delta p}\right)_{ave}$$

$$\bar{v}_s = 85.49\ ft/sec \left(\frac{lb/lb\text{-}mole\ (in.\ Hg)}{°R(in.\ H_2O)}\right)^{1/2} \underline{.84} \sqrt{\frac{(\underline{579})°R}{(\underline{25.55}\ in.\ Hg)(\underline{27.75}\ lb/lb\text{-}mole)}}$$

$\underline{.743}\ (in.\ H_2O) = \underline{48.2}$ ft/sec

E. Average Stack Gas Volumetric Flow Rate

$$Q_s = (3600\ sec/hr)(v_s)(A_s)(1 - B_{ws})\ \frac{T_{std}}{P_{std}}\ \frac{P_s}{T_s}$$

$$Q_s = (3600\ sec/hr)(\underline{48.2}\ ft/sec)(\underline{2.18}\ ft^2)(1 - \underline{.082})\ \frac{528°R}{29.92\ in.\ Hg}\ \frac{\underline{25.55}\ in.\ Hg}{\underline{579}\ °R}$$

$Q_s = \underline{270,417}$ dscf/hr

ACFM = 60 x 2.18 x 48.2 = 6305

F. Pollutant Mass Rate

$$PMR = \frac{mass}{V_{m(std)}} \times Q_s$$

$$PMR = \frac{(.0194)\,gm}{41.324\ dscf} \times 270,417\ dscf/hr \times \frac{1}{454\ gm/lb} = \frac{.28}{6.71\ \#/day}\ lb/hr$$

G. %Isokinetic Variation (Intermediate Data)

$$\%I = \frac{T_s V_{m(std)} P_{std} 100}{A_n \theta v_s P_s T_{std} 60(1 - B_{ws})}$$

$$\% = \frac{(579\ °R)(41.324\ dscf)(29.92\ in.\ Hg)}{(2.64\ ft^2)(72\ min)(48.2\ ft/sec)(25.55\ in.\ Hg)(528\ °R)(60\ sec/min)(1 - .082)}$$

= 105.2 %

Ammo Sulfate
Dryer
P-2
2/14/90

Method 5 Particulate Test
Calculation Form

I. Neccessary Data

A. Reference Method #1
- Area of stack 2.19 ft^2
- No. of equivalent diameters upstream _____
- No. of equivalent diameters downstream _____
- No. of traverse points 12
- Total test time (θ) 72 minutes

B. Reference Method #2
- Average stack temperature T_s 118 °F + 460 = 578 °R
- Stack absolute pressure 25.55 in. Hg.
- Barometric Pressure 25.55 in. Hg.
- $(\sqrt{\Delta p})_{ave}$ .180 (in. $H_2O)^{1/2}$

C. Reference Method #3
- $\%CO_2$ .6 ; $\%O_2$ 13 ; %CO 0 ; $\%N_2$ 86.4

D. Reference Method #4
- Water collected
  Impinger H_2O 56 ml
  Silica Gel 19 gm

E. Reference Method #5
- Area of nozzle _____ ft^2 2.6x10^{-4}
- Average ΔH 1.292 in. H_2O
- Average meter temperature T_m 84 °F + 460 = 544 °R
- Dry gas meter correction factor 1.005
- Volume metered V_m = 51.335 CF
- Particulate Weight .0148 gm

II. Calculations

A. Standard Volume Metered Y = Dry Gas Meter calibration factor

$$V_{m(std)} = V_m Y \frac{T_{std}}{P_{std}} \left(\frac{P_b + \frac{\Delta H}{13.6}}{T_m} \right)$$ 1.292/13.6

$$V_{m(std)} = (51.335 \text{ CF}) \left(\frac{528\,°R}{29.92 \text{ in. Hg}} \right) \left(\frac{25.64 \text{ in. Hg}}{544\,°R} \right) = 42.698 \text{ dscf}$$

B. Moisture Content of Stack Gas

1. H_2O collected in impingers in standard cubic feet

$V_{wc(std)} = K\ (V_f - V_i)$

$V_{wc} = 0.04707\ ft^3/ml$ (56 ml) = 2.636 scf

2. H_2O collected in silica gel in standard cubic feet

$V_{wsg(std)} = K\ (W_f - W_i)$

$V_{wsg(std)} = 0.04715\ ft^3/gm$ (19 gm) = .896 scf

3. Moisture content of stack gas (B_{ws})

$$B_{ws} = \frac{V_{wc(std)} + V_{wsg(std)}}{V_{wc(std)} + V_{wsg(std)} + V_{m(std)}}$$

$$B_{ws} = \frac{(2.636\ \text{scf}) + (.896\ \text{scf})}{(2.636\ \text{scf}) + (.896\ \text{scf}) + (42.698\ \text{scf})} = .076$$

C. Molecular Weight of Stack Gas (lb/lb-mole)

1. M_d (Dry molecular weight) = $\Sigma M_x B_x$

$M_d = (.44)$ .6 $\%CO_2 + (.32)$ 13 $\%O_2$ +

$(.28)$ 0 $\%CO + (.28)$ 86.4 $\%N_2$ = 28.62 lb/lb-mole

2. M_s (Wet Molecular Weight) = $M_d(1 - B_{ws}) + 18\ B_{ws}$

M_s = 28.62 (1 − .076) + 18(.076) = 27.81 lb/lb-mole

.924

D. Average Stack Gas Velocity

$$\bar{v}_s = K_p C_p \sqrt{\frac{T_s}{P_s M_s}} \left(\sqrt{\Delta p}\right)_{ave}$$

$$\bar{v}_s = 85.49\ \text{ft/sec} \left(\frac{\text{lb/lb-mole (in. Hg)}}{°R(\text{in.}H_2O)}\right)^{1/2} .84 \sqrt{\frac{(578)°R}{(25.55\ \text{in. Hg})(27.81\ \text{lb/lb-mole})}}$$

.78 (in. H_2O) = 50.5 ft/sec

E. Average Stack Gas Volumetric Flow Rate

$$Q_s = (3600\ \text{sec/hr})(v_s)(A_s)(1 - B_{ws}) \frac{T_{std}}{P_{std}} \frac{P_s}{T_s}$$

$$Q_s = (3600\ \text{sec/hr})(50.5\ \text{ft/sec})(2.18\ \text{ft}^2)(1 - .076) \frac{528°R}{29.92\ \text{in. Hg}} \frac{25.55\ \text{in. Hg}}{578\ °R}$$

Q_s = 285,665 dscf/hr

ACFM = 60 x 2.18 x 50.5 = 6,605

F. Pollutant Mass Rate

$$PMR = \frac{mass}{V_{m(std)}} \times Q_s$$

$$PMR = \frac{(.0148)\,gm}{42.698\ dscf} \times 285{,}665\ dscf/hr \times \frac{1}{454\ gm/lb} = \frac{\cancel{1.54}\ .22}{\cancel{37.1}\ 5.2}\ lb/hr\ \cancel{\#}/day$$

G. %Isokinetic Variation (Intermediate Data)

$$\%I = \frac{T_s V_{m(std)} P_{std} 100}{A_n \theta v_s P_s T_{std} 60 (1 - B_{ws})}$$

$$\% = \frac{(578\ °R)(42.698\ dscf)(29.92\ in.\ Hg)}{(2.64 \times 10^{-4}\ ft^2)(22\ min)(50.5\ ft/sec)(25.55\ in.\ Hg)(528\ °R)(60\ sec/min)(1 - .076)}$$

$= 102.8\ \%$

Ammo Sulfate
Dryer
R-3
2/15/90

Method 5 Particulate Test
Calculation Form

I. Neccessary Data

A. Reference Method #1
- Area of stack 2.18 ft^2
- No. of equivalent diameters upstream _____
- No. of equivalent diameters downstream _____
- No. of traverse points 12
- Total test time (θ) 72 minutes

B. Reference Method #2
- Average stack temperature T_s 120 °F + 460 = 580 °R
- Stack absolute pressure 25.52 in. Hg.
- Barometric Pressure 25.52 in. Hg.
- $(\sqrt{\Delta p})_{ave}$ .740 (in. H_2O)$^{1/2}$

C. Reference Method #3
- %CO_2 .6 ; %O_2 13 ; %CO 0 ; %N_2 86.4

D. Reference Method #4
- Water collected
  Impinger H_2O 56 ml
  Silica Gel 17.9 gm

E. Reference Method #5
- Area of nozzle _____ ft^2 ~ 2.6×10^{-4}
- Average ΔH 1.158 in. H_2O
- Average meter temperature T_m 98 °F + 460 = 538 °R
- Dry gas meter correction factor 1.005
- Volume metered V_m = 48.346 CF
- Particulate Weight .0242 gm

II. Calculations

A. Standard Volume Metered Y = Dry Gas Meter calibration factor

$$V_{m(std)} = V_m Y \frac{T_{std}}{P_{std}} \left(\frac{P_b + \frac{\Delta H}{13.6}}{T_m} \right) \quad \frac{1.158}{13.6}$$

$$V_{m(std)} = (48.348 \text{ CF}) \left(\frac{528 \text{ °R}}{29.92 \text{ in. Hg}} \right) \left(\frac{25.60 \text{ in. Hg}}{538 \text{ °R}} \right) = 40.598 \text{ dscf}$$

B. Moisture Content of Stack Gas

1. H_2O collected in impingers in standard cubic feet

$V_{wc(std)} = K\ (V_f - V_i)$

$V_{wc} = 0.04707\ ft^3/ml$ (56 ml) = 2.636 scf

2. H_2O collected in silica gel in standard cubic feet

$V_{wsg(std)} = K\ (W_f - W_i)$

$V_{wsg(std)} = 0.04715\ ft^3/gm$ (17.9 gm) = .844 scf

3. Moisture content of stack gas (B_{ws})

$$B_{ws} = \frac{V_{wc(std)} + V_{wsg(std)}}{V_{wc(std)} + V_{wsg(std)} + V_{m(std)}}$$

$$B_{ws} = \frac{(2.636\ \text{scf}) + (.844\ \text{scf})}{(2.636\ \text{scf}) + (.844\ \text{scf}) + (40.598\ \text{scf})} = .080$$

C. Molecular Weight of Stack Gas (lb/lb-mole)

1. M_d (Dry molecular weight) = $\Sigma M_x B_x$

$M_d = (.44)$ .16 $\%CO_2 + (.32)$ .13 $\%O_2$ +

$(.28)$ 0 $\%CO + (.28)$ 86.4 $\%N_2$ = 28.62 lb/lb-mole

2. M_s (Wet Molecular Weight) = $M_d(1 - B_{ws}) + 18\ B_{ws}$

M_s = 28.62 (1 − .08) + 18(.08) = 27.77 lb/lb-mole

D. Average Stack Gas Velocity

$$\bar{v}_s = K_p C_p \sqrt{\frac{T_s}{P_s M_s}} \left(\sqrt{\Delta p}\right)_{ave}$$

$$\bar{v}_s = 85.49\ \text{ft/sec} \left(\frac{\text{lb/lb-mole (in. Hg)}}{°\text{R(in.H}_2\text{O)}}\right)^{1/2} .84 \sqrt{\frac{(580)°\text{R}}{(25.52\ \text{in. Hg})(27.77\ \text{lb/lb-mole})}}$$

.740 (in. H_2O) = 48.1 ft/sec

E. Average Stack Gas Volumetric Flow Rate

$$Q_s = (3600\ \text{sec/hr})(v_s)(A_s)(1 - B_{ws}) \frac{T_{std}}{P_{std}} \frac{P_s}{T_s}$$

$$Q_s = (3600\ \text{sec/hr})(48.1\ \text{ft/sec})(2.18\ \text{ft}^2)(1 - .08) \frac{528°\text{R}}{29.92\ \text{in. Hg}} \frac{25.52\ \text{in. Hg}}{580\ °\text{R}}$$

Q_s = 269,660 dscf/hr

ACFM = 60 × 2.18 × 48.1 = 6,291

F. Pollutant Mass Rate

$$PMR = \frac{mass}{V_{m(std)}} \times Q_s$$

$$PMR = \frac{(.0242)\,gm}{40.598\ dscf} \times 269,660\ dscf/hr \times \frac{1}{454\ gm/lb} = .35\ lb/hr$$

8.5 #/day

G. %Isokinetic Variation (Intermediate Data)

$$\%I = \frac{T_s V_{m(std)} P_{std} 100}{A_n \theta v_s P_s T_{std} 60 (1 - B_{ws})}$$

$$\% = \frac{(580\ °R)(40.598\ dscf)(29.92\ in.\ Hg)}{(.264 \times 10^{-4}\ ft^2)(72\ min)(48.1\ ft/sec)(25.52\ in.\ Hg)(528\ °R)(60\ sec/min)(1 - .08)}$$

= 103.6 %

Ammo Sulfate
Cooler
R-1
2/20/90

Method 5 Particulate Test
Calculation Form

I. Neccessary Data

A. Reference Method #1
- Area of stack 2.18 ft^2
- No. of equivalent diameters upstream _____
- No. of equivalent diameters downstream _____
- No. of traverse points 12
- Total test time (θ) 12 minutes

B. Reference Method #2
- Average stack temperature T_s 96 °F + 460 = 556 °R
- Stack absolute pressure 25.55 in. Hg.
- Barometric Pressure 25.55 in. Hg.
- $(\sqrt{\Delta p})_{ave}$ .828 $(\text{in. } H_2O)^{1/2}$

C. Reference Method #3
- $\%CO_2$ 12 ; $\%O_2$ 21 ; %CO 0 ; $\%N_2$ 78.8

D. Reference Method #4
- Water collected
  Impinger H_2O 0 ml
  Silica Gel 7 gm

E. Reference Method #5
- Area of nozzle _____ ft^2 2.2 x 10^-4
- Average ΔH 1.108 in. H_2O
- Average meter temperature T_m 74 °F + 460 = 534 °R
- Dry gas meter correction factor 1.005
- Volume metered V_m = 46.552 CF
- Particulate Weight .0924 gm

II. Calculations

A. Standard Volume Metered Y = Dry Gas Meter calibration factor

$$V_{m(std)} = V_m Y \frac{T_{std}}{P_{std}} \left(\frac{P_b + \frac{\Delta H}{13.6}}{T_m} \right) \quad \frac{1.108}{13.6}$$

$$V_{m(std)} = (46.552 \text{ CF}) \left(\frac{528\,°R}{29.92 \text{ in. Hg}} \right) \left(\frac{25.63 \text{ in. Hg}}{534\,°R} \right) = 39.429 \text{ dscf}$$

B. Moisture Content of Stack Gas

1. H_2O collected in impingers in standard cubic feet

$V_{wc(std)} = K\ (V_f - V_i)$

$V_{wc} = 0.04707\ ft^3/ml$ (0 ml) = 0 scf

2. H_2O collected in silica gel in standard cubic feet

$V_{wsg(std)} = K\ (W_f - W_i)$

$V_{wsg(std)} = 0.04715\ ft^3/gm$ (7 gm) = .330 scf

3. Moisture content of stack gas (B_{ws})

$$B_{ws} = \frac{V_{wc(std)} + V_{wsg(std)}}{V_{wc(std)} + V_{wsg(std)} + V_{m(std)}}$$

$$B_{ws} = \frac{(0\ \text{scf}) + (.330\ \text{scf})}{(0\ \text{scf}) + (.330\ \text{scf}) + (39.429\ \text{scf})} = .001$$

C. Molecular Weight of Stack Gas (lb/lb-mole)

1. M_d (Dry molecular weight) = $\Sigma M_x B_x$

$M_d = (.44)\ .2\ \%CO_2 + (.32)\ 21\ \%O_2 +$

$(.28)\ 0\ \%CO + (.28)\ 78.8\ \%N_2 = 28.87$ lb/lb-mole

2. M_s (Wet Molecular Weight) = $M_d(1 - B_{ws}) + 18\ B_{ws}$

$M_s =$ _____ $(1 -$ _____ $) + 18($_____$) = 28.87$ lb/lb-mole

D. Average Stack Gas Velocity

$$\bar{v}_s = K_p C_p \sqrt{\frac{T_s}{P_s M_s}} \left(\sqrt{\Delta p}\right)_{ave}$$

$$\bar{v}_s = 85.49\ \text{ft/sec} \left(\frac{\text{lb/lb-mole (in. Hg)}}{°R(\text{in.}H_2O)}\right)^{1/2} .84 \sqrt{\frac{(556)°R}{(25.55\ \text{in. Hg})(28.87\ \text{lb/lb-mole})}}$$

$.828\ (\text{in. } H_2O) = 51.6$ ft/sec

E. Average Stack Gas Volumetric Flow Rate

$$Q_s = (3600\ \text{sec/hr})(v_s)(A_s)(1 - B_{ws})\ \frac{T_{std}}{P_{std}}\ \frac{P_s}{T_s}$$

$$Q_s = (3600\ \text{sec/hr})(51.6\ \text{ft/sec})(2.18\ \text{ft}^2)(1 - 0)\ \frac{528°R}{29.92\ \text{in. Hg}}\ \frac{25.55\ \text{in. Hg}}{556\ °R}$$

$Q_s = 328,395$ dscf/hr

ACFM = 60 X 2.18 X 51.6 = 6,749

F. Pollutant Mass Rate

$$PMR = \frac{mass}{V_{m(std)}} \times Q_s$$

$$PMR = \frac{(.0924)\,gm}{39.429\ dscf} \times 328,395\ dscf/hr \times \frac{1}{454\ gm/lb} = 1.7\ lb/hr$$

40.7 #/day

G. %Isokinetic Variation (Intermediate Data)

$$\%I = \frac{T_s V_{m(std)} P_{std} 100}{A_n \theta v_s P_s T_{std} 60(1 - B_{ws})}$$

$$\% = \frac{(556\ °R)(39.429\ dscf)(29.92\ in.\ Hg)}{(2.18\times10^{-4}\ ft^2)(72\ min)(51.6\ ft/sec)(25.55\ in.\ Hg)(528\ °R)(60\ sec/min)(1 - 0)}$$

= 100.0 %

Amm Sulfate
Coolr
R-2
2/21/90

Method 5 Particulate Test
Calculation Form

I. Neccessary Data

A. Reference Method #1
- Area of stack 2.14 ft^2
- No. of equivalent diameters upstream _____
- No. of equivalent diameters downstream _____
- No. of traverse points 12
- Total test time (θ) 12 minutes

B. Reference Method #2
- Average stack temperature T_s 110 °F + 460 = 570 °R
- Stack absolute pressure 25.55 in. Hg.
- Barometric Pressure 25.55 in. Hg.
- $(\sqrt{\Delta p})_{ave}$ .881 (in. $H_2O)^{1/2}$

C. Reference Method #3
- %CO_2 0 ; %O_2 21 ; %CO 0 ; %N_2 79

D. Reference Method #4
- Water collected
  - Impinger H_2O 0 ml
  - Silica Gel 9.1 gm

E. Reference Method #5
- Area of nozzle 2.2×10^{-4} ft^2
- Average ΔH 1.117 in. H_2O
- Average meter temperature T_m 92 °F + 460 = 552 °R
- Dry gas meter correction factor 1.005
- Volume metered V_m = 46.314 CF
- Particulate Weight .0853 gm

II. Calculations

A. Standard Volume Metered Y = Dry Gas Meter calibration factor

$$V_{m(std)} = V_m Y \frac{T_{std}}{P_{std}} \left(\frac{P_b + \frac{\Delta H}{13.6}}{T_m} \right) \quad \frac{1.117}{13.6}$$

$$V_{m(std)} = (46.314 \text{ CF}) \left(\frac{528 \text{ °R}}{29.92 \text{ in. Hg}} \right) \left(\frac{25.63 \text{ in. Hg}}{552 \text{ °R}} \right) = 37.948 \text{ dscf}$$

B. Moisture Content of Stack Gas

1. H_2O collected in impingers in standard cubic feet

$V_{wc(std)} = K\ (V_f - V_i)$

$V_{wc} = 0.04707\ ft^3/ml$ (0 ml) = 0 scf

2. H_2O collected in silica gel in standard cubic feet

$V_{wsg(std)} = K\ (W_f - W_i)$

$V_{wsg(std)} = 0.04715\ ft^3/gm$ (9.1 gm) = .429 scf

3. Moisture content of stack gas (B_{ws})

$$B_{ws} = \frac{V_{wc(std)} + V_{wsg(std)}}{V_{wc(std)} + V_{wsg(std)} + V_{m(std)}}$$

$$B_{ws} = \frac{(0\ \text{scf}) + (.429\ \text{scf})}{(0\ \text{scf}) + (.429\ \text{scf}) + (37.948\ \text{scf})} = .011$$

C. Molecular Weight of Stack Gas (lb/lb-mole)

1. M_d (Dry molecular weight) = $\Sigma M_x B_x$

$M_d = (.44)$ 0 $\%CO_2 + (.32)$ 21 $\%O_2$ +

$(.28)$ 0 $\%CO + (.28)$ 79 $\%N_2$ = 28.84 lb/lb-mole

2. M_s (Wet Molecular Weight) = $M_d(1 - B_{ws}) + 18\ B_{ws}$

M_s = 28.84 (1 − .011) + 18(.011) = 28.72 lb/lb-mole

D. Average Stack Gas Velocity .987

$$\bar{v}_s = K_p C_p \sqrt{\frac{T_s}{P_s M_s}} \left(\sqrt{\Delta p}\right)_{ave}$$

$$\bar{v}_s = 85.49\ \text{ft/sec} \left(\frac{\text{lb/lb-mole (in. Hg)}}{°R(\text{in.}H_2O)}\right)^{1/2} .84 \sqrt{\frac{(570)°R}{(25.55\ \text{in. Hg})(28.72\ \text{lb/lb-mole})}}$$

.881 (in. H_2O) = 55.8 ft/sec

E. Average Stack Gas Volumetric Flow Rate

$$Q_s = (3600\ \text{sec/hr})(v_s)(A_s)(1 - B_{ws})\ \frac{T_{std}}{P_{std}}\ \frac{P_s}{T_s}$$

$$Q_s = (3600\ \text{sec/hr})(55.8\ \text{ft/sec})(2.18\ \text{ft}^2)(1 - .011)\ \frac{528°R}{29.92\ \text{in. Hg}}\ \frac{25.55\ \text{in. Hg}}{570\ °R}$$

Q_s = 342,592 dscf/hr

ACFm = 60 × 2.18 × 55.8 = 7,299

F. Pollutant Mass Rate

$$PMR = \frac{mass}{V_{m(std)}} \times Q_s$$

$$PMR = \frac{(.0853)\,gm}{37.948\ dscf} \times 342,592\ dscf/hr \times \frac{1}{454\ gm/lb} = \frac{1.7}{40.7}\ lb/hr$$

G. %Isokinetic Variation (Intermediate Data)

$$\%I = \frac{T_s V_{m(std)} P_{std} 100}{A_n \theta v_s P_s T_{std} 60(1 - B_{ws})}$$

$$\% = \frac{(570\ °R)(37.948\ dscf)(29.92\ in.\ Hg)}{(2.18 \times 10^{-4}\ ft^2)(22\ min)(55.8\ ft/sec)(25.55\ in.\ Hg)(528\ °R)(60\ sec/min)(1 - .011)}$$

= 92.3 %

Ammo Sulfat
Cooler
R-3
2/22/90

Method 5 Particulate Test
Calculation Form

I. Neccessary Data

A. Reference Method #1
- Area of stack 2.18 ft^2
- No. of equivalent diameters upstream _____
- No. of equivalent diameters downstream _____
- No. of traverse points 12
- Total test time (θ) 72 minutes

B. Reference Method #2
- Average stack temperature T_s 96 °F + 460 = 556 °R
- Stack absolute pressure 25.58 in. Hg.
- Barometric Pressure 25.58 in. Hg.
- $(\sqrt{\Delta p})_{ave}$ .843 (in. $H_2O)^{1/2}$

C. Reference Method #3
- $\%CO_2$ 0 ; $\%O_2$ 21 ; %CO 0 ; $\%N_2$ 79

D. Reference Method #4
- Water collected
  - Impinger H_2O 0 ml
  - Silica Gel 12 gm

E. Reference Method #5
- Area of nozzle 2.2×10^{-4} ft^2
- Average ΔH 1.026 in. H_2O
- Average meter temperature T_m 76.8 °F + 460 = 537 °R
- Dry gas meter correction factor 1.005
- Volume metered V_m = 46.512 CF
- Particulate Weight .0541 gm

II. Calculations

A. Standard Volume Metered

Y = Dry Gas Meter calibration factor

$$V_{m(std)} = V_m Y \frac{T_{std}}{P_{std}} \left(\frac{P_b + \frac{\Delta H}{13.6}}{T_m} \right) \qquad \frac{1.026}{13.6}$$

$$V_{m(std)} = (46.512 \text{ CF}) \left(\frac{528\,°R}{29.92 \text{ in. Hg}} \right) \left(\frac{25.65 \text{ in. Hg}}{537\,°R} \right) = 39.206 \text{ dscf}$$

$\frac{H}{R}$

F. Pollutant Mass Rate

$$PMR = \frac{mass}{V_{m(std)}} \times Q_s$$

$$PMR = \frac{(\cancel{.00}541)\,gm}{39.206\ dscf} \times 331{,}089\ dscf/hr \times \frac{1}{454\ gm/lb} = 1.01\ lb/hr$$

G. %Isokinetic Variation (Intermediate Data)

$$\%I = \frac{T_s V_{m(std)} P_{std} 100}{A_n \theta v_s P_s T_{std} 60(1 - B_{ws})}$$

$$\% = \frac{(556\ °R)(39.206\ dscf)(29.92\ in.\ Hg)}{(2.18 \times 10^{-4}\ ft^2)(72\ min)(52.7\ ft/sec)(25.58\ in.\ Hg)(528\ °R)(60\ sec/min)(1 - .014)}$$

$= 98.6$

9

10

APPENDIX 2 - RAW FIELD DATA

IDAHO AIR QUALITY BUREAU
IDHW/DIVISION OF ENVIRONMENT
Visible Emission Observation Form

SOURCE NAME Ammonium Sulfate	OBSERVATION DATE 2/13/90	START TIME 9:35	STOP TIME 9:43
ADDRESS J.R. Simplot Don Plant			
CITY Pocatello	STATE ID	ZIP	
PHONE	SOURCE ID NUMBER		
PROCESS EQUIPMENT Cooler	OPERATING MODE open		
CONTROL EQUIPMENT cyclone	OPERATING MODE open		
DESCRIBE EMISSION POINT START scrubber (cyclone) STOP stack			
HEIGHT ABOVE GROUND LEVEL START 70' STOP	HEIGHT RELATIVE TO OBSERVER START 70' STOP		
DISTANCE FROM OBSERVER START 100' STOP	DIRECTION FROM OBSERVER START NW STOP		
DESCRIBE EMISSIONS START particulate STOP			
EMISSION COLOR START White STOP	PLUME TYPE CONTINUOUS ☐ FUGITIVE ☐ INTERMITTENT ☒		
WATER DROPLETS PRESENT NO ☒ YES ☐	IF WATER DROPLET PLUME ATTACHED ☐ DETACHED ☐		
POINT IN THE PLUME AT WHICH OPACITY WAS DETERMINED START Top of stack STOP			
DESCRIBE BACKGROUND START sky STOP			
BACKGROUND COLOR START blue STOP	SKY CONDITIONS START mostly STOP clear		
WIND SPEED START 0-2mph STOP	WIND DIRECTION START W STOP		
AMBIENT TEMP START ~0° STOP	WET BULB TEMP.	RH, percent	

SEC / MIN	0	15	30	45	SEC / MIN	0	15	30	45
1					31				
2					32				
3					33				
4					34				
5					35	5	5	15	5
6					36	10	0	10	0
7					37	5	5	5	10
8					38	0	0	5	0
9					39	15	10	0	0
10					40	5	5	15	10
11					41	10	10	5	5
12					42	0	5	5	10
13					43				
14					44				
15					45				
16					46				
17					47				
18					48				
19					49				
20					50				
21					51				
22					52				
23					53				
24					54				
25					55				
26					56				
27					57				
28					58				
29					59				
30					60				

Source Layout Sketch

Draw North Arrow

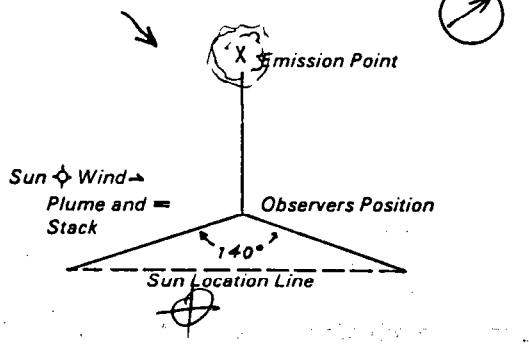

NUMBER OF READINGS ABOVE 15 % was 0	NUMBER OF MINUTES ABOVE 20 % was 0
AVERAGE OF READINGS ABOVE 15 % was 0	RANGE OF READINGS ABOVE 15 % was 0 to 0

COMMENTS	OBSERVER'S NAME Norm Self
	OBSERVER'S SIGNATURE [signature] DATE 2/13/90
I HAVE RECEIVED A COPY OF THESE OPACITY OBSERVATIONS SIGNATURE	CERTIFIED BY DATE
TITLE DATE	VERIFIED BY DATE

HWE 0072

IDAHO AIR QUALITY BUREAU
IDHW/DIVISION OF ENVIRONMENT

Visible Emission Observation Form

SOURCE NAME: Ammonium Sulfate	OBSERVATION DATE: 2/13/90	START TIME: 9:25	STOP TIME: 9:33
ADDRESS: J.R. Simplot Don Plant			
CITY: Pocatello	STATE: ID	ZIP:	
PHONE:	SOURCE ID NUMBER:		
PROCESS EQUIPMENT: product dryer	OPERATING MODE: Oper		
CONTROL EQUIPMENT: Venturi SCR	OPERATING MODE: Oper		
DESCRIBE EMISSION POINT: START Scrubber Stack STOP			
HEIGHT ABOVE GROUND LEVEL: START 76' STOP	HEIGHT RELATIVE TO OBSERVER: START 76' STOP		
DISTANCE FROM OBSERVER: START 100' STOP	DIRECTION FROM OBSERVER: START NW STOP		
DESCRIBE EMISSIONS: START steam plume STOP			
EMISSION COLOR: START white STOP	PLUME TYPE: CONTINUOUS ☒ FUGITIVE ☐ INTERMITTENT ☐		
WATER DROPLETS PRESENT: NO ☐ YES ☒	IF WATER DROPLET PLUME: ATTACHED ☒ DETACHED ☐		
POINT IN THE PLUME AT WHICH OPACITY WAS DETERMINED: START end of plume STOP			
DESCRIBE BACKGROUND: START sky STOP			
BACKGROUND COLOR: START blue STOP	SKY CONDITIONS: START mostly clear STOP		
WIND SPEED: START 0-2 mph STOP	WIND DIRECTION: START W STOP		
AMBIENT TEMP: START 0° STOP	WET BULB TEMP.	RH, percent	

MIN \ SEC	0	15	30	45	MIN \ SEC	0	15	30	45
1					31	0	0	5	0
2					32	0	0	0	0
3					33				
4					34				
5					35				
6					36				
7					37				
8					38				
9					39				
10					40				
11					41				
12					42				
13					43				
14					44				
15					45				
16					46				
17					47				
18					48				
19					49				
20					50				
21					51				
22					52				
23					53				
24					54				
25	0	0	0	0	55				
26	0	5	0	0	56				
27	5	5	0	0	57				
28	0	0	0	0	58				
29	0	0	0	0	59				
30	0	0	0	0	60				

Source Layout Sketch

Draw North Arrow

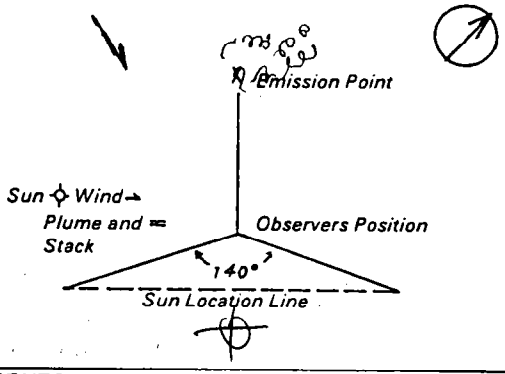

NUMBER OF READINGS ABOVE: 15 % was 0	NUMBER OF MINUTES ABOVE: 20 % was 0
AVERAGE OF READINGS ABOVE: 15 % was 0	RANGE OF READINGS ABOVE: 15 % was 0 to 0

COMMENTS	OBSERVER'S NAME: Norm Self	
	OBSERVER'S SIGNATURE: X Norm Self	DATE: 2/13/90
I HAVE RECEIVED A COPY OF THESE OPACITY OBSERVATIONS / SIGNATURE	CERTIFIED BY	DATE
TITLE / DATE	VERIFIED BY	DATE

HWE 0072

Plant Cannon Sulfat Dryer
Run no. R-1
Location Sinclair
Date 2/17/90
Operator Dennis
Sample box no.
Meter box no.
Nomograph ID no.
Orsat no. ___ Date rebuilt ___
Fyrite no. ___ Date rebuilt ___

C_p .84
$\Delta H_@$ 1.79
P_m, in. Hg
P_s, in. Hg

Stack Port Tables

st start time 8:15
Stop time 9:30
D_n calculated (in.)
D_n, used (in.) .22
Ambient temp., °F
Bar. pressure, in. Hg 25.55
Heater box setting, °F 250
Probe heater setting, °F 250
Average ΔH
Leak rate@15 in. Hg Pre-test OK Post-test OK
Pitot & Pitot tubes OK

Point	Clock time (min)	Dry gas meter CF	Pitot in H_2O Δp	De				Pump vacuum in. Hg gauge	Box temp. °F	Impinger temp. °F	Stack press. in. Hg	Stack temp. °F	Fy %C
1	0	804.900	.58	1.				2.5	250	40		118	
2	3	806.9	.57	1.				2.5	250	40		118	
3	6	808.9	.58	1.				2.5	240	40		116	
4	9	810.9	.57	1.				2.5	240	40		116	
5	12	812.9	.58	1.				2.5	240	40		116	
6	15	814.8	.58	1.				2.5	240	41		116	
7	18	816.8	.70	1.				2.5	240	41		120	
8	21	819.0	.70	1.				2.5	240	46		120	
9	24	821.2	.68	1.5		78	64	2.5	245	48		118	
10	27	823.4	.67	1.4		80	64	2.5	245	48		118	
11	30	825.6	.64	1.4		82	66	2.5	245	50		118	
12	33	827.8	.61	1.3		84	68	2.5	250	50		118	
end	36	829.969				84	70						

Point	Clock time (min)	Dry gas meter CF	Pitot in H_2O Δp	Orifice ΔH in H_2O Desired	Orifice ΔH in H_2O Actual	Dry gas temp. °F Inlet	Dry gas temp. °F Outlet	Pump vacuum in. Hg gauge	Box temp. °F	Impinger temp. °F	Stack press. in. Hg	Stack temp. °F	Fyr %C
1	0	829.969	.50	1.1		—	—	3.0	250	54		120	
2	3	831.9	.50	1.1		84	70	3.0	250	54		120	
3	6	833.9	.48	1.0		84	70	3.0	250	56		118	
4	9	835.8	.49	1.0		84	70	3.0	250	56		118	
5	12	837.8	.49	1.0		86	72	3.0	250	60		120	
6	15	839.7	.46	.98		86	74	3.0	250	60		120	
7	18	841.7	.48	1.0		86	74	3.0	255	64		120	
8	21	843.6	.48	1.0		86	74	3.0	255	64		120	
9	24	845.5	.49	1.0		86	76	3.0	250	66		120	
10	27	847.5	.49	1.0		88	76	3.0	250	66		120	
11	30	849.4	.49	1.0		88	76	3.0	250	66		120	
12	33	851.4	.49	1.0		88	76	3.0	250	68		120	
end	36	853.396				MISSING DATA							
	72 min	48.496	.743	1.166		71°F	531°R					119°F	579°

Comments:

Test observers:

GAS ANALYSIS DATA FORM

PLANT Ammo Sulfat Dryer
DATE 2/14/90 TEST NO R-1
SAMPLING TIME (24-hr CLOCK) 815-930
SAMPLING LOCATION stack
SAMPLE TYPE (BAG, INTEGRATED, CONTINUOUS) Integrated
ANALYTICAL METHOD Orsat
AMBIENT TEMPERATURE
OPERATOR Dennis

COMMENTS:

RUN / GAS	1		2		3		AVERAGE NET VOLUME	MULTIPLIER	MOLECULAR WEIGHT OF STACK GAS (DRY BASIS) M_d.
	ACTUAL READING	NET	ACTUAL READING	NET	ACTUAL READING	NET			
CO_2	.6	.6	.6	.6	.6	.6		44/100	.264
O_2 (NET IS ACTUAL O_2 READING MINUS ACTUAL CO_2 READING)	13.6	13.0	13.6	13.0	13.6	13.0		32/100	4.16
CO (NET IS ACTUAL CO READING MINUS ACTUAL O_2 READING)	0	0	0	0	0	0		28/100	
N_2 (NET IS 100 MINUS ACTUAL CO READING)		86.4		86.4		86.4		28/100	24.19
								TOTAL	28.62

Plant Ammo Sulfate Dry
Run no. A-2
Location Scrubbed
Date 2/14/90
Operator Dennis
Sample box no.
Meter box no.
Nomograph ID no.
Orsat no. ___ Date rebuilt ___
Fyrite no. ___ Date rebuilt ___

C_p .84
$\Delta H@$ 1.79
P_m, in. Hg
P_s, in. Hg
B_{ws} (assumed)
M_d
M_s
T_m, °R
T_s, °R
Δp_{avg}, in. H_2O

est start time 940
Stop time 1055
D_n calculated (in.)
D_n, used (in.) .122
Ambient temp., °F
Bar. pressure, in. Hg 25.55
Heater box setting, °F 252
Probe heater setting, °F 250
Average ΔH
Leak rate@15 in. Hg Pre-test OK Post-test 7
Post leak & pitot lines OK

Point	Clock time (min)	Dry gas meter CF	Pitot in H_2O Δp	Orifice ΔH in H_2O Desired	Orifice ΔH in H_2O Actual	Dry gas temp. °F Inlet	Dry gas temp. °F Outlet	Pump vacuum in. Hg gauge	Box temp. °F	Impinger temp. °F	Stack press. in. Hg	Stack temp. °F	Fyr %C
1	0	853.800	.67	1.4		—	—	3.0	250	50	0	118	
2	3	856.0	.68	1.5		82	76	3.0	250	53		118	
3	6	858.3	.67	1.4		82	76	3.0	250	50		118	
4	9	860.5	.67	1.4		84	76	3.0	250	54		118	
5	12	862.8	.67	1.4		86	76	3.0	250	54		118	
6	15	865.0	.69	1.5		88	76	3.0	250	54		118	
7	18	867.2	.74	1.6		88	76	3.0	250	50		118	
8	21	869.5	.75	1.6		90	76	3.0	250	50		118	
9	24	871.9	.73	1.5		90	78	3.0	250	50		118	
10	27	874.2	.73	1.5		90	78	3.0	250	50		118	
11	30	876.5	.73	1.5		92	78	3.0	250	50		118	
12	33	878.7	.73	1.5		92	78	3.0	250	50		118	
end	36	881.045				92	78						

Point	Clock time (min)	Dry gas meter CF	Pitot in H_2O Δp	Orifice ΔH in H_2O Desired	Orifice ΔH in H_2O Actual	Dry gas temp. °F Inlet	Dry gas temp. °F Outlet	Pump vacuum in. Hg gauge	Box temp. °F	Impinger temp. °F	Stack press. in. Hg	Stack temp. °F	Fyr %C
1	0	881.045	.53	1.1		—	—	3.0	250	50	0	118	
2	3	883.0	.52	1.1		92	78	3.0	250	54		118	
3	6	885.0	.53	1.1		92	80	3.0	250	56		118	
4	9	887.0	.53	1.1		92	80	3.0	245	58		118	
5	12	889.0	.54	1.1		92	80	3.0	245	58		118	
6	15	891.0	.53	1.1		92	80	3.0	245	58		118	
7	18	893.0	.54	1.1		92	80	3.0	245	60		118	
8	21	895.1	.53	1.1		92	80	3.0	245	60		118	
9	24	897.1	.53	1.1		92	82	3.0	245	64		118	
10	27	899.1	.50	1.1		92	82	3.0	245	64		118	
11	30	901.1	.50	1.1		92	82	3.0	245	64		118	
12	33	903.1	.51	1.1		94	82	3.0	245	64		118	
end	36	905.135				94	82						
	72min	51.335	.780	1.292		84°F	544°R					119°F	57801

Comments:

Test observers: [illegible]

GAS ANALYSIS DATA FORM

PLANT Ammo Sulfate Dryer
DATE 2/14/90 TEST NO R-2
SAMPLING TIME (24-hr CLOCK) 940 - 1055
SAMPLING LOCATION Stack
SAMPLE TYPE (BAG, INTEGRATED, CONTINUOUS) Integrated
ANALYTICAL METHOD Orsat
AMBIENT TEMPERATURE
OPERATOR Dennis

COMMENTS:

RUN / GAS	1		2		3		AVERAGE NET VOLUME	MULTIPLIER	MOLECULAR WEIGHT OF STACK GAS (DRY BASIS) M_d
	ACTUAL READING	NET	ACTUAL READING	NET	ACTUAL READING	NET			
CO_2	.6	.6	.6	.6	.6	.6		44/100	.264
O_2 (NET IS ACTUAL O_2 READING MINUS ACTUAL CO_2 READING)	13.6	13.0	13.6	13.0	13.6	13.0		32/100	4.16
CO (NET IS ACTUAL CO READING MINUS ACTUAL O_2 READING)	0	0	0	0	0	0		28/100	
N_2 (NET IS 100 MINUS ACTUAL CO READING)		86.4		86.4		86.4		28/100	24.19
								TOTAL	28.62

Plant Ammo Sulfate Dryer
Run no. R-5
Location Sunglow
Date 2/15/90
Operator Dennis
Sample box no.
Meter box no.
Nomograph ID no.
Orsat no. ___ Date rebuilt ___
Fyrite no. ___ Date rebuilt ___

C_p .84
$\Delta H@$ 1.79
P_m, in. Hg
P_s, in. Hg 25.52
B_{ws} (assumed) 10%
M_d
M_s
T_m, °R
T_s, °R
$\Delta p_{avg.}$, in. H_2O

est start time 830
Stop time 745
D_n calculated (in.)
D_n, used (in.) .22
Ambient temp., °F
Bar. pressure, in. Hg 25.52
Heater box setting, °F 250
Probe heater setting, °F 250
Average ΔH
Leak rate@15 in. Hg Pre-test 0 Post-test 0
Post test leak check

Point	Clock time (min)	Dry gas meter CF	Pitot in H_2O Δp	Orifice ΔH in H_2O Desired	Orifice ΔH in H_2O Actual	Dry gas temp. °F Inlet	Dry gas temp. °F Outlet	Pump vacuum in. Hg gauge	Box temp. °F	Impinger temp. °F	Stack press. in. Hg	Stack temp. °F	Fyr %C
1	0	905.800	.61	1.3		—	—	2.5	240	40	0	118	
2	3	907.8	.62	1.3		62	62	2.5	240	40		118	
3	6	909.8	.62	1.3		64	60	2.5	240	40		118	
4	9	911.8	.63	1.3		66	60	2.5	245	42		120	
5	12	913.9	.64	1.4		70	60	2.5	245	44		120	
6	15	915.9	.63	1.3		74	62	2.5	245	44		120	
7	18	917.9	.65	1.4		78	64	2.5	250	46		120	
8	21	920.0	.65	1.4		80	64	2.5	250	46		120	
9	24	922.2	.63	1.3		82	66	2.5	250	48		120	
10	27	924.3	.63	1.3		84	68	2.5	250	48		120	
11	30	926.4	.60	1.3		84	70	2.5	250	50		120	
12	33	928.5	.58	1.2		88	70	2.5	250	50		120	
end	36	930.512				88	72						

Point	Clock time (min)	Dry gas meter CF	Pitot in H_2O Δp	Orifice ΔH in H_2O Desired	Orifice ΔH in H_2O Actual	Dry gas temp. °F Inlet	Dry gas temp. °F Outlet	Pump vacuum in. Hg gauge	Box temp. °F	Impinger temp. °F	Stack press. in. Hg	Stack temp. °F	Fyr %C
1	0	930.512	.47	1.0		—	—	2.5	250	52	0	120	
2	3	932.5	.48	1.0		88	72	2.5	250	52		120	
3	6	934.5	.47	1.0		88	74	2.5	250	54		120	
4	9	936.5	.47	1.0		90	76	2.5	250	54		118	
5	12	938.4	.47	1.0		90	76	2.5	250	56		120	
6	15	940.3	.47	1.0		90	76	2.5	250	58		120	
7	18	942.3	.48	1.0		92	78	2.5	250	60		120	
8	21	944.3	.48	1.0		92	78	2.5	250	60		120	
9	24	946.2	.48	1.0		92	80	2.5	250	60		120	
10	27	948.2	.48	1.0		94	80	2.5	250	62		120	
11	30	950.2	.48	1.0		94	80	2.5	250	64		120	
12	33	952.2	.48	1.0		94	82	2.5	250	64		120	
end	36	954.148				94	82						
	12 mins	48.348	.740	1.158		78°F	538°F					120°F	580°F

Comments:

Test observers:

GAS ANALYSIS DATA FORM

PLANT Acme Sulfate Dryer
DATE 2/15/80 TEST NO R-3
SAMPLING TIME (24-hr CLOCK) 830 - 945
SAMPLING LOCATION Stack
SAMPLE TYPE (BAG, INTEGRATED, CONTINUOUS) Integrated
ANALYTICAL METHOD Orsat
AMBIENT TEMPERATURE
OPERATOR Dennis

COMMENTS:

RUN / GAS	1		2		3		AVERAGE NET VOLUME	MULTIPLIER	MOLECULAR WEIGHT OF STACK GAS (DRY BASIS) M_d
	ACTUAL READING	NET	ACTUAL READING	NET	ACTUAL READING	NET			
CO_2	.6	.6	.6	.6	.6	.6		44/100	.264
O_2 (NET IS ACTUAL O_2 READING MINUS ACTUAL CO_2 READING)	13.6	13	13.6	13	13.6	13		32/100	4.16
CO (NET IS ACTUAL CO READING MINUS ACTUAL O_2 READING)	0	0	0	0	0	0		28/100	
N_2 (NET IS 100 MINUS ACTUAL CO READING)		86.4		86.4		86.4		28/100	24.19
								TOTAL	28.62

Plant: Cromo Sulfate Cell
Run no.: R-1
Location: Sample
Date: 2/20/90
Operator: Demoro
Sample box no.:
Meter box no.:
Nomograph ID no.:
Orsat no.: ___ Date rebuilt: ___
Fyrite no.: ___ Date rebuilt: ___

C_p: .84
$\Delta H_@$: 1.79
P_m, in. Hg:
P_s, in. Hg:
B_{ws} (assumed): 4%
M_d:
M_s:
T_m, °R:
T_s, °R:
$\Delta p_{avg.}$, in. H_2O:

Test start time: 9:25
Stop time: 10:36
D_n calculated (in.):
D_n, used (in.): .20
Ambient temp., °F:
Bar. pressure, in. Hg: 25.55
Heater box setting, °F: 250
Probe heater setting, °F: 250
Average ΔH:
Leak rate @15 in. Hg Pre-test OK Post-test:

Point	Clock time (min)	Dry gas meter CF	Pitot in H_2O Δp	Orifice ΔH in H_2O Desired	Orifice ΔH in H_2O Actual	Dry gas temp. °F Inlet	Dry gas temp. °F Outlet	Pump vacuum in. Hg gauge	Box temp. °F	Impinger temp. °F	Stack press. in. Hg	Stack temp. °F	Fy %C
1	0	4.400	.55	9.0		—	—	2.0	250	40	0	98	
2	3	6.20	.55	9.0		60	60	2.0	250	40		98	
3	6	8.0	.56	.90		62	60	2.0	250	40		98	
4	9	9.8	.56	.90		66	60	2.0	250	40		98	
5	12	11.6	.56	.90		68	60	2.0	250	40		98	
6	15	13.4	.56	.90		69	62	2.0	250	42		96	
7	18	15.2	.67	1.1		74	64	2.0	250	42		96	
8	21	17.1	.67	1.1		78	64	2.0	250	42		96	
9	24	19.1	.68	1.1		80	66	2.5	250	46		96	
10	27	21.0	.68	1.1		82	66	2.5	250	46		96	
11	30	23.0	.71	1.2		84	68	2.5	250	50		96	
12	33	24.9	.71	1.2		86	70	2.5	250	50		96	
end	36.	26.898											

Point	Clock time (min)	Dry gas meter CF	Pitot in H_2O Δp	Orifice ΔH in H_2O Desired	Orifice ΔH in H_2O Actual	Dry gas temp. °F Inlet	Dry gas temp. °F Outlet	Pump vacuum in. Hg gauge	Box temp. °F	Impinger temp. °F	Stack press. in. Hg	Stack temp. °F	Fyr %C
1	0	26.898	.76	1.2		—	—	3.0	250	54	0	96	
2	3	28.9	.77	1.2		86	72	3.0	250	54		96	
3	6	30.9	.77	1.2		88	72	3.0	250	54		96	
4	9	32.9	.78	1.2		90	74	3.0	250	56		96	
5	12	35.0	.77	1.2		90	76	3.0	250	56		96	
6	15	36.9	.76	1.2		90	76	3.0	250	56		96	
7	18	38.9	.76	1.2		92	76	3.0	250	56		96	
8	21	40.9	.74	1.2		92	78	3.0	250	56		96	
9	24	43.0	.74	1.2		94	80	3.0	250	56		96	
10	27	44.9	.74	1.2		94	80	3.0	250	56		96	
11	30	46.9	.74	1.2		94	80	3.0	250	58		96	
12	33	48.9	.74	1.2		94	82	3.0	250	58		96	
end.	36	50.952				96	82						
	Average	46.552	.828	1.108		94°F	534°R					96°F	556

Comments:

Test observers:

GAS ANALYSIS DATA FORM

PLANT Ammo Sulfat Cooler
DATE 2/20/90 TEST NO R-1
SAMPLING TIME (24-hr CLOCK) 925 - 1036
SAMPLING LOCATION Stack
SAMPLE TYPE (BAG, INTEGRATED, CONTINUOUS) Integrated
ANALYTICAL METHOD Orsat
AMBIENT TEMPERATURE
OPERATOR Dennis

COMMENTS:

RUN / GAS	1		2		3		AVERAGE NET VOLUME	MULTIPLIER	MOLECULAR WEIGHT OF STACK GAS (DRY BASIS) M_d
	ACTUAL READING	NET	ACTUAL READING	NET	ACTUAL READING	NET			
CO_2	.2	.2	.2	.2	.2	.2		44/100	.088
O_2 (NET IS ACTUAL O_2 READING MINUS ACTUAL CO_2 READING)	21.2	21	21.2	21	21.2	21		32/100	6.72
CO (NET IS ACTUAL CO READING MINUS ACTUAL O_2 READING)	0	0	0	0	0	0		28/100	
N_2 (NET IS 100 MINUS ACTUAL CO READING)	78.	78.8		78.8		78.8		28/100	22.064
								TOTAL	28.87

Plant: Simmons Sulfate Cole
Run no.: R-2
Location: Simpson
Date: 2/21/90
Operator: Dennis
Sample box no.: ____
Meter box no.: ____
Nomograph ID no.: ____
Orsat no.: ____ Date rebuilt: ____
Fyrite no.: ____ Date rebuilt: ____

C_p: .84
$\Delta H@$: 1.79
P_m, in. Hg: ____
P_s, in. Hg: ____
B_{ws} (assumed): 4%
M_d: ____
M_s: ____
T_m, °R: ____
T_s, °R: ____
$\Delta p_{avg.}$, in. H_2O: ____

est start time: 8:45
Stop time: 10:00
D_n calculated (in.): ____
D_n, used (in.): .20
Ambient temp., °F: ____
Bar. pressure, in. Hg: 25.55
Heater box setting, °F: 250
Probe heater setting, °F: 250
Average ΔH: ____
Leak rate@15 in. Hg Pre-test: OK Post-test: OK
Pitot & Pitot lines OK

Point	Clock time (min)	Dry gas meter CF	Pitot in H_2O Δp	Orifice ΔH in H_2O Desired	Orifice ΔH in H_2O Actual	Dry gas temp. °F Inlet	Dry gas temp. °F Outlet	Pump vacuum in. Hg gauge	Box temp. °F	Impinger temp. °F	Stack press. in. Hg	Stack temp. °F	Fyr %C
1	0	51.500	.62	.90		—	—	2.0	250	44	0	110	
2	3	53.3	.62	.90		78	76	2.0	250	44		110	
3	6	55.0	.62	.90		80	76	2.0	250	44		110	
4	9	56.8	.62	.90		84	76	2.0	250	44		110	
5	12	58.6	.65	.95		86	76	2.0	250	50		110	
6	15	60.5	.65	.95		88	78	2.0	250	50		110	
7	18	62.3	.71	1.0		92	80	2.0	250	50		110	
8	21	64.2	.73	1.1		94	80	2.0	250	50		110	
9	24	66.1	.81	1.2		96	82	2.0	250	50		110	
10	27	68.1	.82	1.2		98	82	2.0	250	56		110	
11	30	70.0	.83	1.2		100	84	2.0	250	62		110	
12	33	72.0	.83	1.2		100	86	2.0	250	62		110	
end	36	~~73.990~~ 73.990				100	86						

Point	Clock time (min)	Dry gas meter CF	Pitot in H_2O Δp	Orifice ΔH in H_2O Desired	Orifice ΔH in H_2O Actual	Dry gas temp. °F Inlet	Dry gas temp. °F Outlet	Pump vacuum in. Hg gauge	Box temp. °F	Impinger temp. °F	Stack press. in. Hg	Stack temp. °F	Fyr %C
1	0	73.990	.86	1.2		—	—	2.0	250	66	0	110	
2	3	75.9	.88	1.2		100	88	2.0	250	66		110	
3	6	77.9	.86	1.2		102	88	2.0	250	66		110	
4	9	79.9	.86	1.2		104	90	2.0	250	66		110	
5	12	81.9	.86	1.2		104	90	2.0	250	68		110	
6	15	83.9	.85	1.2		104	90	2.0	250	68		110	
7	18	85.9	.84	1.2		106	92	2.0	250	68		110	
8	21	87.9	.85	1.2		106	92	2.0	250	68		110	
9	24	89.9	.85	1.2		106	92	2.0	250	66		110	
10	27	91.8	.85	1.2		106	94	2.0	250	66		110	
11	30	93.8	.84	1.2		108	94	2.0	250	66		110	
12	33	95.8	.84	1.2		108	94	2.0	250	66		110	
end	36	97.814				108	96						
			.777										
	72 min	46.314	.881	1.117		92°F	552					110°F	5909

Comments: ____

Test observers: ____

GAS ANALYSIS DATA FORM

PLANT Ammo Sulfate Cooler
DATE 2/21/90 TEST NO R-2
SAMPLING TIME (24-hr CLOCK) 8:45 - 10:00
SAMPLING LOCATION Stack
SAMPLE TYPE (BAG, INTEGRATED, CONTINUOUS) Integrated
ANALYTICAL METHOD Orsat
AMBIENT TEMPERATURE
OPERATOR Dennis

COMMENTS:

RUN / GAS	1		2		3		AVERAGE NET VOLUME	MULTIPLIER	MOLECULAR WEIGHT OF STACK GAS (DRY BASIS) M_d
	ACTUAL READING	NET	ACTUAL READING	NET	ACTUAL READING	NET			
CO_2	0	0	0	0	0	0		44/100	
O_2 (NET IS ACTUAL O_2 READING MINUS ACTUAL CO_2 READING)	21.0	21.0	21.0	21.0	21.0	21.0		32/100	6.72
CO (NET IS ACTUAL CO READING MINUS ACTUAL O_2 READING)	0	0	0	0	0	0		28/100	
N_2 (NET IS 100 MINUS ACTUAL CO READING)		79.0		79.0		79.0		28/100	22.12
								TOTAL	28.84

Plant: Canyon Sulfite Co
Run no.: R-3
Location: Simplot
Date: 2/28/90
Operator: Dennis
Sample box no.:
Meter box no.:
Nomograph ID no.:
Orsat no.: ___ Date rebuilt: ___
Fyrite no.: ___ Date rebuilt: ___

C_p: .84
$\Delta H_@$: 1.79
P_m, in. Hg:
P_s, in. Hg:
B_{ws} (assumed): 4%
M_d:
M_s:
T_m, °R:
T_s, °R:
Δp_{avg}, in. H_2O:

Test start time: 1020
Stop time: 1135
D_n calculated (in.):
D_n, used (in.): .20
Ambient temp., °F:
Bar. pressure, in. Hg: 25.58
Heater box setting, °F: 250
Probe heater setting, °F: 250
Average ΔH:
Leak rate @ 15 in. Hg Pre-test: OK Post-test: OK
Post Leak & Pitot Lines OK

Point	Clock time (min)	Dry gas meter CF	Pitot in H_2O Δp	Orifice ΔH in H_2O Desired	Orifice ΔH in H_2O Actual	Dry gas temp. °F Inlet	Dry gas temp. °F Outlet	Pump vacuum in. Hg gauge	Box temp. °F	Impinger temp. °F	Stack press. in. Hg	Stack temp. °F	Fyr %C
1	0	98.200	.54	.79		—	—	2.0	250	50	0	94	
2	3	99.8	.58	.85		56	56	2.0	250	44		94	
3	6	101.7	.64	.95		60	56	2.0	250	44		94	
4	9	103.4	.64	.95		64	56	2.0	250	44		94	
5	12	105.2	.64	.95		68	58	2.0	250	44		94	
6	15	107.1	.65	.95		70	58	2.0	250	44		94	
7	18	108.9	.67	.98		74	60	2.0	250	48		96	
8	21	110.8	.68	1.0		78	62	2.0	250	48		96	
9	24	112.7	.70	1.0		80	64	2.0	250	48		96	
10	27	114.6	.72	1.0		82	66	2.0	250	48		96	
11	30	116.5	.72	1.0		84	68	2.0	250	52		96	
12	33	118.5	.72	1.0		86	68	2.0	250	52		96	
end	36	120.466				86	68						

Point	Clock time (min)	Dry gas meter CF	Pitot in H_2O Δp	Orifice ΔH in H_2O Desired	Orifice ΔH in H_2O Actual	Dry gas temp. °F Inlet	Dry gas temp. °F Outlet	Pump vacuum in. Hg gauge	Box temp. °F	Impinger temp. °F	Stack press. in. Hg	Stack temp. °F	Fyri %CO
1	0	120.466	.76	1.1		—	—	2.0	250	54	0	96	
2	3	122.5	.76	1.1		88	72	2.0	250	54		96	
3	6	124.5	.76	1.1		88	74	2.0	250	56		96	
4	9	126.5	.77	1.1		90	76	2.0	250	56		96	
5	12	128.5	.77	1.1		92	76	2.0	250	56		96	
6	15	130.5	.77	1.1		92	78	2.0	250	56		96	
7	18	132.6	.77	1.1		94	78	2.0	250	56		96	
8	21	134.6	.77	1.1		94	80	2.0	250	56		96	
9	24	136.6	.77	1.1		94	80	2.0	250	56		96	
10	27	138.7	.77	1.1		96	82	2.0	250	60		96	
11	30	140.7	.77	1.1		96	82	2.0	250	60		96	
12	33	142.7	.77	1.1		96	82	2.0	250	62		96	
end	36	144.712				96	84						
	72 min	46.512	.843	1.026		76.8°F	537°R					96°F	556°F

Comments:

Test observers:

GAS ANALYSIS DATA FORM

PLANT Ammo Sulfate Cooler
DATE 2/22/90 TEST NO
SAMPLING TIME (24-hr CLOCK) 1020 1135
SAMPLING LOCATION Stack
SAMPLE TYPE (BAG, INTEGRATED, CONTINUOUS) Integrated
ANALYTICAL METHOD Orsat
AMBIENT TEMPERATURE
OPERATOR Dennis

COMMENTS:

RUN / GAS	1		2		3		AVERAGE NET VOLUME	MULTIPLIER	MOLECULAR WEIGHT OF STACK GAS (DRY BASIS) M_d
	ACTUAL READING	NET	ACTUAL READING	NET	ACTUAL READING	NET			
CO_2	0	0	0	0	0	0		44/100	
O_2 (NET IS ACTUAL O_2 READING MINUS ACTUAL CO_2 READING)	21	21	21	21	21	21		32/100	6.72
CO (NET IS ACTUAL CO READING MINUS ACTUAL O_2 READING)	0	0	0	0	0	0		28/100	
N_2 (NET IS 100 MINUS ACTUAL CO READING)		79		79		79		28/100	22.12
								TOTAL	28.84

APPENDIX 3 - LABORATORY REPORT:

Is Chain of Custody applicable? Yes < > No <x> If yes, Chain or Custody is attached. If no, explain: All samples are analyzed by test team members listed in Appendix 7. No transfer of samples to persons outside the team is done.

APPENDIX 3 - LABORATORY REPORT

SAMPLE RECOVERY AND INTEGRITY DATA FORM

Plant Ammo Sulfate Dryer Sample date 2/14/90
Sample location Stack Outlet Run number R-1
Sample recovery person JMO Recovery date 2/14/90
Filter(s) number # 6

MOISTURE

Impingers			Silica gel		
Final volume (wt)	262 ml (g)		Final wt	416.8 g	g
Initial volume (wt)	200 ml (g)		Initial wt	400 g	g
Net volume (wt)	62 ml (g)		Net wt	16.8 g	g
Total moisture	g				

Color of silica gel bottom 3 in pink rest blue
Description of impinger water Clear

RECOVERED SAMPLE

Blank filter container number # 6 Sealed yes
Filter container number # 6 Sealed —
Description of particulate on filter

Acetone rinse container number — Liquid level marked? —
Acetone blank container number — Liquid level marked? —
Samples stored and locked N/A
Remarks

Date of laboratory custody 2/14/90
Laboratory personnel taking custody JMO
Remarks

SAMPLE ANALYTICAL DATA FORM

Plant Ammo Sulfate Dryer Run number R-1

Sample location Stack Outlet

Relative humidity 47%

Density of acetone (ρ_a) .7837 g/ml

Sample type	Sample identifiable	Liquid level marked and/or container sealed
Acetone rinse	Yes	✓
filter(s)	Yes	✓

Acetone rinse container number #3 400ml beaker

Acetone rinse volume (V_{aw}) 300ml ml

Acetone blank residue concentration (C_a) 0 mg/g

$W_a = C_a V_{aw} \rho_a$ = (0) (300) (.7837) = 0 mg

Date and time of wt 2/14/90 15:20 P.M Gross wt 149424.8 mg

Date and time of wt 2/15/90 07:00 A.M Gross wt 149424.7 mg

Average gross wt 149424.75 mg

Tare wt 149417.3 mg

Less acetone blank wt (W_a) 0 mg

Weight of particulate in acetone rinse (m_a) 7.5 mg

Filter(s) container number #6

Date and time of wt 2/14/90 15:00 PM Gross wt 625.7 mg

Date and time of wt 2/15/90 07:00 A.M Gross wt 625.7 mg

Average gross wt 625.7 mg

Tare wt 613.8 mg

Weight of particulate on filter(s) (m_f) 11.9 mg

Weight of particulate in acetone rinse 7.5 mg

Total weight of particulate (m_n) 19.4 mg

Note: In no case should a blank residue >0.01 mg/g or 0.001% of the weight of acetone used be subtracted from the sample weight.

Remarks

Signature of analyst [illegible]

Signature of reviewer

SAMPLE RECOVERY AND INTEGRITY DATA FORM

Plant Ammo Sulfate Dryer Sample date 2/14/90
Sample location Stack Outlet Run number R-2
Sample recovery person JNO Recovery date 2/14/90
Filter(s) number #5

MOISTURE

Impingers			Silica gel		
Final volume (wt)	256 ml (g)		Final wt	419 g	/ g
Initial volume (wt)	200 ml (g)		Initial wt	400 g	X g
Net volume (wt)	56 ml (g)		Net wt	19 g	/ g
Total moisture	g				

Color of silica gel bottom 3" pink
Description of impinger water clear

RECOVERED SAMPLE

Blank filter container number #5 Sealed yes
Filter container number #5 Sealed —
Description of particulate on filter

Acetone rinse container number — Liquid level marked? —
Acetone blank container number — Liquid level marked? —
Samples stored and locked N/A
Remarks

Date of laboratory custody 2/14/90
Laboratory personnel taking custody JNO
Remarks

SAMPLE ANALYTICAL DATA FORM

Plant Ammo Sulfate Dryer Run number R-2

Sample location Stack Outlet

Relative humidity 47%

Density of acetone (ρ_a) .7837 g/ml

Sample type	Sample identifiable	Liquid level marked and/or container sealed
Acetone rinse	Yes	✓
filter(s)	Yes	✓

Acetone rinse container number #4

Acetone rinse volume (V_{aw}) 300 ml ml

Acetone blank residue concentration (C_a) 0 mg/g

$W_a = C_a V_{aw} \rho_a$ = (0) (300) (.7837) = 0 mg

Date and time of wt 2/14/90 15:25 P.M Gross wt 144952.2 mg

Date and time of wt 2/15/90 7:10 AM Gross wt 144952.3 mg

Average gross wt 144952.3 mg

Tare wt 144949.8 mg

Less acetone blank wt (W_a) 0 mg

Weight of particulate in acetone rinse (m_a) 2.5 mg

Filter(s) container number #5

Date and time of wt 2/14/90 15:10 P.M Gross wt .6320 mg

Date and time of wt 2/15/90 7:07 AM Gross wt .6320 mg

Average gross wt 6320 mg

Tare wt 619.7 mg

Weight of particulate on filter(s) (m_f) 12.3 mg

Weight of particulate in acetone rinse 2.5 mg

Total weight of particulate (m_n) 14.8 mg

Note: In no case should a blank residue >0.01 mg/g or 0.001% of the weight of acetone used be subtracted from the sample weight.

Remarks

Signature of analyst JMD

Signature of reviewer

SAMPLE RECOVERY AND INTEGRITY DATA FORM

Plant Ammo Sulfate Dryer Sample date 2/15/90
Sample location Stack Outlet Run number R-3
Sample recovery person Jno Recovery date 2/15/90
Filter(s) number #7

MOISTURE

Impingers			Silica gel		
Final volume (wt)	256 ml (g)		Final wt	417.9 g	/ g
Initial volume (wt)	200 ml (g)		Initial wt	400 g	X g
Net volume (wt)	56 ✓ ml (g)		Net wt	17.9 ✓ g	g
Total moisture	g				

Color of silica gel 3/4 blue
Description of impinger water clear

RECOVERED SAMPLE

Blank filter container number #7 Sealed —
Filter container number #7 Sealed —
Description of particulate on filter clean looking

Acetone rinse container number + Liquid level marked? yes
Acetone blank container number same Liquid level marked? yes
Samples stored and locked N A
Remarks

Date of laboratory custody 2/15/90
Laboratory personnel taking custody Jno
Remarks

SAMPLE ANALYTICAL DATA FORM

Plant Amm Sulfate Dryer Run number R-3

Sample location Stack outlet

Relative humidity 48%

Density of acetone (ρ_a) .7837 g/ml

Sample type	Sample identifiable	Liquid level marked and/or container sealed
Acetone rinse	yes	✓
filter(s)	yes	✓

Acetone rinse container number 1

Acetone rinse volume (V_{aw}) 300 ml/l ml

Acetone blank residue concentration (C_a) 0 mg/g

$W_a = C_a V_{aw} \rho_a$ = (0) (300) (.7837) = 0 mg

Date and time of wt 2/16/90 0710 A.M Gross wt 133579.3 mg

Date and time of wt 2/16/90 13:28 P.M Gross wt 133579.3 mg

Average gross wt 133579.3 mg

Tare wt 133577.1 mg

Less acetone blank wt (W_a) 0 mg

Weight of particulate in acetone rinse (m_a) 2.2 ✓ mg

Filter(s) container number

Date and time of wt 2/16/90 0712 A.M Gross wt 645.3 mg

Date and time of wt 2/16/90 1330 P.M Gross wt 645.3 mg

Average gross wt 645.3 mg

Tare wt 623.3 mg

Weight of particulate on filter(s) (m_f) 22.0 ✓ mg

Weight of particulate in acetone rinse 2.2 mg

Total weight of particulate (m_n) 24.2 ✓ mg

Note: In no case should a blank residue >0.01 mg/g or 0.001% of the weight of acetone used be subtracted from the sample weight.

Remarks

Signature of analyst [signature]

Signature of reviewer

SAMPLE RECOVERY AND INTEGRITY DATA FORM

Plant Ammo Sulfate Cooler Sample date 2/20/90
Sample location Stack Run number R-1
Sample recovery person Jno Recovery date 2/20/90
Filter(s) number #8 .6184

MOISTURE

Impingers			Silica gel		
Final volume (wt)	197 ml (g)		Final wt	410 g	/ g
Initial volume (wt)	200 ml (g)		Initial wt	400 g	/ g
Net volume (wt)	-3 ml (g)		Net wt	10 g	/ g
Total moisture	7 g				

Color of silica gel [redacted] blue bottom 1" was pink
Description of impinger water Clear

RECOVERED SAMPLE

Blank filter container number #8 Sealed yes
Filter container number #8 Sealed yes
Description of particulate on filter White

Acetone rinse container number N/A 1 Liquid level marked? ✓
Acetone blank container number N/A 1 Liquid level marked? ✓
Samples stored and locked NA
Remarks

Date of laboratory custody 2/20/90
Laboratory personnel taking custody Jno
Remarks

SAMPLE ANALYTICAL DATA FORM

Plant Ammo Sulfate Cooler Run number R-1

Sample location Stack

Relative humidity 44%

Density of acetone (ρ_a) .7837 g/ml

Sample type	Sample identifiable	Liquid level marked and/or container sealed
Acetone rinse	Yes	✓
filter(s)	Yes	✓

Acetone rinse container number #3

Acetone rinse volume (V_{aw}) 300 m/s ml

Acetone blank residue concentration (C_a) 0 mg/g

$W_a = C_a V_{aw} \rho_a$ = (0) (300) (.7837) = 0 mg

Date and time of wt 2/20/90 1400 P.M Gross wt 149443.8 mg

Date and time of wt 2/21/90 1050 A.M Gross wt 149443.7 mg

Average gross wt 149443.8 mg

Tare wt 149418.6 mg

Less acetone blank wt (W_a) 0 mg

Weight of particulate in acetone rinse (m_a) 25.2 ✓ mg

Filter(s) container number #8

Date and time of wt 2/20/90 14-20 PM Gross wt 685.6 mg

Date and time of wt 2/21/90 1030 A.M Gross wt 685.6 mg

Average gross wt 685.6 mg

Tare wt 618.4 mg

Weight of particulate on filter(s) (m_f) 67.2 ✓ mg

Weight of particulate in acetone rinse 25.2 mg

Total weight of particulate (m_n) 92.4 ✓ mg

Note: In no case should a blank residue >0.01 mg/g or 0.001% of the weight of acetone used be subtracted from the sample weight.

Remarks

Signature of analyst [signature]

Signature of reviewer

SAMPLE RECOVERY AND INTEGRITY DATA FORM

Plant Ammo Sulfate Cooler Sample date 2/21/90
Sample location Stack Run number R-2
Sample recovery person Jno Recovery date 2/21/90
Filter(s) number #10

MOISTURE

Impingers			Silica gel		
Final volume (wt)	197 ml (g)		Final wt	412.1 g	X g
Initial volume (wt)	200 ml (g)		Initial wt	400 g	X g
Net volume (wt)	-3 ml (g)		Net wt	12.1 g	X g
Total moisture	9.1 g				

Color of silica gel mostly blue all but about 1½ inches
Description of impinger water Clear

RECOVERED SAMPLE

Blank filter container number #8 Sealed ✓
Filter container number #8 Sealed ✓
Description of particulate on filter White

Acetone rinse container number ~~#1~~ #2 Liquid level marked? yes
Acetone blank container number ~~#1~~ #2 Liquid level marked? yes
Samples stored and locked N/A
Remarks —

Date of laboratory custody 2/21/90
Laboratory personnel taking custody John Olson
Remarks —

SAMPLE ANALYTICAL DATA FORM

Plant Ammo Sulfate Cooler Run number 2-2

Sample location Stack

Relative humidity 47%

Density of acetone (ρ_a) .7837 g/ml

Sample type	Sample identifiable	Liquid level marked and/or container sealed
Acetone rinse	Yes	✓
filter(s)	Yes	✓

Acetone rinse container number #2

Acetone rinse volume (V_{aw}) 300 m/s ml

Acetone blank residue concentration (C_a) 0 mg/g

$W_a = C_a V_{aw} \rho_a$ = (0) (300) (.7837) = 0 mg

Date and time of wt 2/21/90 1400 P.M Gross wt 147025.8 mg

Date and time of wt 2/22/90 0710 Am Gross wt 147025.8 mg

Average gross wt [illegible] mg

Tare wt 146982.4 mg

Less acetone blank wt (W_a) 0 mg

Weight of particulate in acetone rinse (m_a) 43.4 mg

Filter(s) container number #10

Date and time of wt 2/21/90 1420 P.M Gross wt 658.4 mg

Date and time of wt 2/22/90 0720 Am Gross wt 658.4 mg

Average gross wt 658.4 mg

Tare wt 616.5 mg

Weight of particulate on filter(s) (m_f) 41.9 mg

Weight of particulate in acetone rinse 43.4 mg

Total weight of particulate (m_n) 85.3 mg

Note: In no case should a blank residue >0.01 mg/g or 0.001% of the weight of acetone used be subtracted from the sample weight.

Remarks

Signature of analyst [signature]

Signature of reviewer

SAMPLE RECOVERY AND INTEGRITY DATA FORM

Plant Ammo Sulfate Cooler Sample date 2/23/90
Sample location Ammo Sulfate Cooler Stack Run number R-3
Sample recovery person JMO Recovery date
Filter(s) number

MOISTURE

Impingers			Silica gel			
Final volume (wt)	200	ml (g)	Final wt	~~400~~	g	g
Initial volume (wt)	200	ml (g)	Initial wt	400	g	g
Net volume (wt)	0	ml (g)	Net wt	12	g	g
Total moisture	12	g				

Color of silica gel blue/bottom 1" was pink
Description of impinger water clear

RECOVERED SAMPLE

Blank filter container number #11 Sealed ✓
Filter container number #11 Sealed ✓
Description of particulate on filter white

Acetone rinse container number N/A / Liquid level marked? ✓
Acetone blank container number N/A / Liquid level marked? ✓
Samples stored and locked N/A
Remarks

Date of laboratory custody 2/23/90
Laboratory personnel taking custody JMO
Remarks

SAMPLE ANALYTICAL DATA FORM

Plant Ammo Sulfate Cooler Run number R-3

Sample location Stack

Relative humidity 46%

Density of acetone (ρ_a) .7837 g/ml

Sample type	Sample identifiable	Liquid level marked and/or container sealed
Acetone rinse	Yes	✓
filter(s)	Yes	✓

Acetone rinse container number #5

Acetone rinse volume (V_{aw}) 300 mls ml

Acetone blank residue concentration (C_a) 0 mg/g

$W_a = C_a V_{aw} \rho_a$ = (0) (300) (.7837) = 0 mg

Date and time of wt 2/23/90 0710 AM Gross wt 152353.6 mg

Date and time of wt 2/23/90 1400 PM Gross wt 152353.6 mg

Average gross wt 152353.6 mg

Tare wt 152341.3 mg

Less acetone blank wt (W_a) 0 mg

Weight of particulate in acetone rinse (m_a) 12.3 ✓ mg

Filter(s) container number #11

Date and time of wt 2/23/90 0710 AM Gross wt 658.3 mg

Date and time of wt 2/23/90 1400 PM Gross wt 658.3 mg

Average gross wt 658.3 mg

Tare wt 616.5 mg

Weight of particulate on filter(s) (m_f) 41.8 ✓ mg

Weight of particulate in acetone rinse 12.3 mg

Total weight of particulate (m_n) 54.1 ✓ mg

Note: In no case should a blank residue >0.01 mg/g or 0.001% of the weight of acetone used be subtracted from the sample weight.

Remarks

Signature of analyst John D. Moon

Signature of reviewer

APPENDIX 4 - RAW PRODUCTION DATA

APPENDIX 4 - RAW PRODUCTION DATA:

I have reviewed the attached log sheets, and I verify that these are the plant operating data, as entered by the operator, during the time of the test.

Name (print): Delbert L Butler

Signature: Delbert L Butler Date: 5-4-90

Title: Area Supervisor

AMMONIUM SULFATE PLANT

Daily Log Sheet

DATE [illegible]

TIME	FLOWS: Sulfuric Acid (GPM)	Ammonia (PPH)	Scrubber Liquor (GPM)	Water to Barometric Leg (GPM)	Water to Process (GPM)	TEMPERATURES: East Crystalizer Overflow (Deg. F)	West Crystalizer Overflow (Deg. F)	Heat Exchange Exit (Deg. F)	Dryer Outlet (Deg. F)	Product Cooler Outlet (Deg. F)	Water Outlet Barometric Leg (Deg. F)	Centrifuge Oil (Deg. F)
Manite	6	2.6	90	405	4.5		160 158	181 179	190	148	128	
0200	6	2.5	90	405	4		158 158	180 179	190	150	122	
		2.6	92	405	4		158 158	180 179	190	144	120	
0600	6	2.6	89	405	4.5		158 158	179 180	185	140	120	
0800	6	2.6	93	405	5.0		158 158	180 181	185	138	122	
1000	6	2.6	92	405	5.0		158 159	180 180	185	140	120	
1200	6	2.6	92	405	5.0		158 158	180 179	188	141	122	
1400	6	2.6	91	405	4.9		159 160	179 180	188	144	122	
1600	[illegible]	[illegible]	100	[illegible]	[illegible]		[illegible] 157	[illegible] 179	190	[illegible]	[illegible]	
1800	[illegible]	[illegible]	100	405	5		160 160	180 [illegible]	190	[illegible]	130	
2000	1	2.8	13	400	4		163	[illegible]	[illegible]	[illegible]	5	
2200			90	[illegible]	[illegible]		156 [illegible]	[illegible] 179	[illegible]	[illegible]		

TIME	PRESSURE: Steam to Heat Exchanger (PSI)	Crystalizer Vacuum pi (IN Hg)	Crystalizer Pres. (Abs.) (IN H_2O)	Scrubber ΔP (IN H_2O)	LEVEL: Crystalizer (% F.S.)	Surge Tank (% F.S.)	ANALYSIS: Crystalizer (pH)	Fines Tank (pH)	Settled Solids Crystalizer (%)	+ 14 Mesh (%)	+ 20 Mesh (%)
Manite	2	18.4	63		112	57	3.6 4.7	7.2	53.5 35	54 90	96 97
0200	2	18.4	64		112	57	3.8 3.7	3.8	53.7 [illegible]	91 92	98 99
	2	18.4	64		112	60	4.1 4.0	3.5	55.4 56.8	89 90	97 98
0600	1.5	18.4	64		113	60	3.1 3.6	4.0	55.2 57.4	87 86	97 97
0800	2.0	18.2	63		113	59	3.7 3.8	3.8	57.0 56.8	95 91	100 98
1000	2.0	18.2	63		113	60	4.0 3.8	3.6	56.6 55.9	95 94	100 99
1200	2.0	18.2	63		113	58	3.8 4.5	3.8	56.1 56.2	94 96	98 100
1400	2.0	18.2	63		112	59	3.8 3.7	3.6	55.3 55.4	95 94	99 99
1600	4	[illegible]	[illegible]		[illegible]	59	[illegible]	[illegible]	[illegible]	[illegible]	[illegible]
1800	[illegible]	18	[illegible]		[illegible]	[illegible]	[illegible]	[illegible]	[illegible]	[illegible]	[illegible]
2000	[illegible]	[illegible]	[illegible]		114	[illegible]	[illegible]		[illegible]	[illegible]	[illegible]
2200	1.5	1.8	59		[illegible]	[illegible]	[illegible]		[illegible]	[illegible]	[illegible]

TIME	AMMETERS: Elutriation Pump (Amps)	Cooler Screw (Amps)	Crystalizer Mixer (Amps)	Mother Liquor Pump (Amps)	Slurry Pump (Amps)	Centrifuge (Amps)	Dryer Fan (Amps)	UTILITIES: Steam Header Pressure (PSI)	Steam Pres. on Ejector (PSI)	Instrument Air Pressure (PSI)
Manite	7.3	3.2	24	16.5	13	24	39	20	32	7.5
0200	[illegible]	[illegible]	24	16.5	12	24	39.5	20	32	7.5
	7.3	3.1	24	[illegible]	12	23	[illegible]	20	32	[illegible]
0600	7.3	3.1	24	[illegible]	12	24	39	20	32	7.5
0800	7.3	3.1	23	16.5	13	25	39	20	32	7.8
1000	7.3	3.1	23	16.5	13	23	39	20	32	7.[illegible]
1200	7.3	3.1	23	16.5	12	23	39	20	32	8.[illegible]
1400	7.3	3.2	24	16.5	13	24	39	20	32	8.0
1600	[illegible]	[illegible]	[illegible]	[illegible]	[illegible]	[illegible]	[illegible]	[illegible]	[illegible]	[illegible]
1800	[illegible]	[illegible]	[illegible]	[illegible]	[illegible]	[illegible]	[illegible]	[illegible]	[illegible]	[illegible]
2000	[illegible]	[illegible]	[illegible]	[illegible]	[illegible]	[illegible]	[illegible]	[illegible]	[illegible]	[illegible]
2200	[illegible]	[illegible]	[illegible]	[illegible]	[illegible]	[illegible]	[illegible]	[illegible]	[illegible]	[illegible]

METER READING	AMSOX	STEAM	KWH	CH_4	WATER	H_2SO_4
TODAY	252[illegible]	[illegible]	[illegible]	[illegible]		
YESTERDAY	[illegible]	[illegible]			[illegible]	
DIFFERENCE						

Chemical Analysis	12-8	8-4	4-12
Ammsox Line (SO_2)	10	11	[illegible]
Ammsox Tank (SO_2)	[illegible]	10	
Ammsox Tank Level (ft)	104	98"	
Condensate (SO_4)	0	[illegible]	
[illegible]	.56	.58	

12 - OPERATOR Robbins WASHED BOTTOM FLOOR

REMARKS

229577
217577
15,000

8-4 OPERATOR [illegible]

REMARKS

242577
229577
13,000

4-12 OPERATOR

REMARKS: [illegible]

POC-NH_3-10

AMMONIUM SULFATE PLANT

Daily Log Sheet

DATE 2/15/96

TIME	FLOWS: Sulfuric Acid (GPM)	Ammonia (PPH)	Scrubber Liquor (GPM)	Water to Barometric Leg (GPM)	Water to Process (GPM)	TEMPERATURES: East Crystalizer Overflow (Deg. F)	West Crystalizer Overflow (Deg. F)	Heat Exchange Exit (Deg. F)	Dryer Outlet (Deg. F)	Product Cooler Outlet (Deg. F)	Water Outlet Barometric Leg (Deg. F)	Centrifuge Oil (Deg. F)	PRESSURE: Steam to Heat Exchanger (PSI)	Crystalizer Vacuum pi (IN Hg)	Crystalizer Pres. (Abs.) (IN H_2O)	Scrubber ΔP (IN H_2O)	LEVEL: Crystalizer (% F.S.)	Surge Tank (% F.S.)
Mdnite	6	2.6	86	405	4.5		158/158	178/179	190	145	126		2	18.2	63		111	60
0200	6	2.6	94	405	4.5		158/158	179/179	190	150	126		2	18.4	64		112	60
0400		2.5	98	405	4.5		159/158	181/178	190	146	126		2	18.4	64		113	58
0600		2.6	93	400	4		158/158	179/179	190	142	127		2	18.4	63		112	60
0800	6	2.6	90	400	4		158/158	179/180	190	142	126		1.5	18.2	63		113	60
1000	6	2.6	90	400	4.2		158/159	180/180	190	142	128		1.5	18	64		112	60
1200	6	2.6	90	400	4.5		159/158	180/179	190	142	128		1.5	18	63		112	60
1400	6	2.6	90	400	4.8		158/159	180/180	190	140	130		1.5	18	63		112	60
1600	6	2.5	92	400	4.0		159/159	180/180	190	140	132		[illegible]	[illegible]	63		[illegible]	[illegible]
1800	6	2.5	91	405	4.8		159/159	180/178	185	140	136		1.8	18.4	63		[illegible]	[illegible]
2000	6	2.5	92	405	4.9		159/159	180/180	187	142	138		1.8	18.4	63		113	60
2200	6	2.5	91	400	4.8		163/161	181/180	187	144	144		[illegible]	[illegible]	62		113	60

TIME	ANALYSIS: Crystalizer (pH)	Fines Tank (pH)	Settled Solids Crystalizer (%)	+ 14 Mesh (%)	+ 20 Mesh (%)	AMMETERS: Elutriation Pump (Amps)	Cooler Screw (Amps)	Crystalizer Mixer (Amps)	Mother Liquor Pump (Amps)	Slurry Pump (Amps)	Centrifuge (Amps)	Dryer Fan (Amps)	UTILITIES: Steam Header Pressure (PSI)	Steam Pres. on Ejector (PSI)	Instrument Air Pressure (PSI)
Mdnite	3.8/3.9	4.0	55.5/56.4	92/96	94/96	2.5	[illegible]	2.5	[illegible]	1.4	2.3	3.9	[illegible]	[illegible]	140
0200	4.5/4.6	3.6	55.6/55.8	89/90	94/94	2.4	3.3	2.5	16.1	1.4	2.4	[illegible]	26	[illegible]	28
0400	3.9/3.8	[illegible]	[illegible]	[illegible]	[illegible]	[illegible]	3.3	[illegible]	[illegible]	1.4	[illegible]	[illegible]	24	[illegible]	28
0600	4.2/4.4	3.8	[illegible]	93/93	99/99	[illegible]	[illegible]	[illegible]	[illegible]	[illegible]	[illegible]	[illegible]	28	[illegible]	28
0800	4.2/4.0	3.8	58.8/57.8	95/94	100/99	7.4	3.2	25	16.5	13	25	39.5	20	32	80
1000	4.2/3.6	3.8	57.0/57.4	93/92	98/98	7.4	3.2	24	16.5	13	25	39.5	20	32	80
1200	3.7/5.2	4.0	57.5/57.7	90/89	98/97	7.4	3.2	24	16.5	13	25	40	20	32	80
1400	4.2/4.0	3.8	58.2/57.1	89/93	97/98	7.3	3.1	24	16.5	13	25	39	20	32	80
1600	[illegible]	[illegible]	[illegible]	81	95	[illegible]	[illegible]	[illegible]	[illegible]	[illegible]	[illegible]	[illegible]	[illegible]	[illegible]	[illegible]
1800	[illegible]	[illegible]	[illegible]	[illegible]	[illegible]	[illegible]	[illegible]	[illegible]	[illegible]	[illegible]	[illegible]	[illegible]	[illegible]	[illegible]	[illegible]
2000	[illegible]	4.1	[illegible]	92	[illegible]	[illegible]	[illegible]	[illegible]	[illegible]	[illegible]	[illegible]	[illegible]	[illegible]	[illegible]	[illegible]
2200	[illegible]	[illegible]	[illegible]	[illegible]	[illegible]	[illegible]	[illegible]	[illegible]	[illegible]	[illegible]	[illegible]	[illegible]	[illegible]	[illegible]	[illegible]

METER READING	AMSOX	STEAM	KWH	CH_4	WATER	H_2SO_4
TODAY	292606	56234020	6005	[illegible]	8327317	[illegible]
YESTERDAY	252606	[illegible]	[illegible]	[illegible]	[illegible]	[illegible]
DIFFERENCE						

Chemical Analysis	12-8	8-4	4-12
Ammsox Line (SO_2)	8	6	11
Ammsox Tank (SO_2)	4	10	6
Ammsox Tank Level	99	86"	70"
Condensate (SO_4)	0	zero	X
Line pH	[illegible]	.87	[illegible]

12-8 OPERATOR [illegible]

REMARKS

265606
252606
13,000

8-4 OPERATOR Ostrosky

REMARKS

279606
265606
14,000

4-12 OPERATOR Hur: Hole at bottom

REMARKS: of [illegible] is getting big

292606
-279606
13000

FOC-NH3-10

AMMONIUM SULFATE PLANT
Daily Log Sheet

DATE 2/20/90

TIME	FLOWS: Sulfuric Acid (GPM)	Ammonia (PPH)	Scrubber Liquor (GPM)	Water to Barometric Leg (GPM)	Water to Process (GPM)	TEMPERATURES: East Crystalizer Overflow (Deg. F)	West Crystalizer Overflow (Deg. F)	Heat Exchange Exit (Deg. F)	Dryer Outlet (Deg. F)	Product Cooler Outlet (Deg. F)	Water Outlet Barometric Leg (Deg. F)	Centrifuge Oil (Deg. F)
Midnite					5							
0200												
0400					4							
0600		23			4							
0800	6	23	96	400	4	160	160	181	190	146	130	
1000	6	23	90	400	5	161	181	181	190	146	130	
1200	6	23	88	400	5	161	160	180	190	148	132	
1400	6	23	90	400	5	161	161	180	190	150	130	
1600	6	2.4	90	390	5	161	159	181	190	148	124	
1800	6	2.1	92	440	4.1	160	160	179	190	130	100	
2000	6	2.5	88	440	5	160	161	180	187	142	118	
2200	6	2.5	87	425	4.1	160		183	190	152	122	

TIME	PRESSURE: Steam to Heat Exchanger (PSI)	Crystalizer Vacuum pi (IN Hg)	Crystalizer Pres. (Abs.) (IN H_2O)	Scrubber ΔP (IN H_2O)	LEVEL: Crystalizer (% F.S.)	Surge Tank (% F.S.)	ANALYSIS: Crystalizer (pH)	Fines Tank (pH)	Settled Solids Crystalizer (%)	+ 14 Mesh (%)	+ 20 Mesh (%)
Midnite											
0200											
0400											
0600	1										
0800	1										
1000	1	18.2	63		111	59	3.5 / 4.4	3.4	54.6 / 56.0	97 / 98	100 / 100
1200	.5	18.2	63		111	59	4.0 / 4.0	3.6	55.4 / 54.6	97 / 98	100 / 100
1400	.5	18	63		111	59	3.7 / 4.6	3.6	55.4 / 55.1	97 / 98	98 / 100
1600	.5	18	63		111	59	4.0 / 4.0	3.8	55.7	97	100 / 100
1800	.8	18	63		112	59	4.0 / 3.9	4.0	55.5	97	93
2000	.3	18.4	64		100	62	3.4 / 3.6	3.5	52.1 / 53.2	94	96
2200	.3	18.4	63		112	61	4.2 / 4.2	4.1	53.3	90	94
	.3	18.4	63		112	60	4.3	4.1		90	

TIME	AMMETERS: Elutriation Pump (Amps)	Cooler Screw (Amps)	Crystalizer Mixer (Amps)	Mother Liquor Pump (Amps)	Slurry Pump (Amps)	Centrifuge (Amps)	Dryer Fan (Amps)	UTILITIES: Steam Header Pressure (PSI)	Steam Pres. on Ejector (PSI)	Instrument Air Pressure (PSI)
Midnite										
0200										
0400										
0600										
0800										
1000	23	32	24	16.5	13	21	39.5	34	32	80
1200	23	32	24	16.5	13	22	39.5	34	32	80
1400	23	31	24	16.5	13	24	39.8	35	32	80
1600	23	32	24	16.5	12	23	39.5	34	32	80
1800	24	32	23	16.5	12	23	39.5	36	32	76
2000	22	31	24	16.5	13	23	39	38	32	80
2200										
	23									

METER READING	AMSOX	STEAM	KWH	CH_4	WATER	H_2SO_4
TODAY	436180	56[illegible]	[illegible]	[illegible]	[illegible]	[illegible]
YESTERDAY	1110250	56[illegible]623	[illegible]	[illegible]	[illegible]	[illegible]
DIFFERENCE						

Chemical Analysis	12-8	8-4	4-12
Ammsox Line (SO_2)		10	10
Ammsox Tank (SO_2)		11	10
Ammsox Tank Level		102"	106"
Condensate (SO_4)		[illegible]	[illegible]
Line [illegible]		.63	.77

12-8 OPERATOR Jimmy

REMARKS [illegible]

8-4 OPERATOR [illegible]

REMARKS

430000
420000
10,000

4-12 OPERATOR [illegible]

REMARKS: [illegible]

[illegible] 436180
[illegible] 430000
6180

POC-NH_3-10

AMMONIUM SULFATE PLANT

Daily Log Sheet

DATE 2/21/90

TIME	FLOWS: Sulfuric Acid (GPM)	Ammonia (PPH)	Scrubber Liquor (GPM)	Water to Barometric Leg (GPM)	Water to Process (GPM)	TEMPERATURES: East Crystalizer Overflow (Deg. F)	West Crystalizer Overflow (Deg. F)	Heat Exchange Exit (Deg. F)	Dryer Outlet (Deg. F)	Product Cooler Outlet (Deg. F)	Water Outlet Barometric Leg (Deg. F)	Centrifuge Oil (Deg. F)
Mdnite												
0200												
0400												
0600												
0800	6	2.3	100	425	4		161 161	181 181	150	150	110	
1000	6	2.2	98	425	5		161 161	180 180	150	154	114	
1200	6	2.4	98	425	5		161 161	181 181	150	156	114	
1400	6	2.4	88	440	5		161 161	181 181	150	158	116	
1600												
1800												
2000												
2200												

TIME	PRESSURE: Steam to Heat Exchanger (PSI)	Crystalizer Vacuum pl (IN Hg)	Crystalizer Pres. (Abs.) (IN H_2O)	Scrubber ΔP (IN H_2O)	LEVEL: Crystalizer (% F.S.)	Surge Tank (% F.S.)
Mdnite						
0200						
0400						
0600						
0800	3	18.4	63		114	60
1000	2.5	18.4	63		111	62
1200	2.5	18.4	63		111	61
1400	2.5	18.4	63		112	60
1600						
1800						
2000						
2200						

TIME	ANALYSIS: Crystalizer (pH)	Fines Tank (pH)	Settled Solids Crystalizer (%)	+ 14 Mesh (%)	+ 20 Mesh (%)
Mdnite					
0200					
0400					
0600					
0800	7.0 7.4	3.4	56 56	80 89	93 95
1000	7.0 7.4	3.6	55 56	90 92	94 94
1200	7.2 7.0	3.5	56 56	91 95	95 96
1400	7.3 7.6	3.5	56 56	88 91	90 90
1600					
1800					
2000					
2200					

TIME	AMMETERS: Elutriation Pump (Amps)	Cooler Screw (Amps)	Crystalizer Mixer (Amps)	Mother Liquor Pump (Amps)	Slurry Pump (Amps)	Centrifuge (Amps)	Dryer Fan (Amps)	UTILITIES: Steam Header Pressure (PSI)	Steam Pres. on Ejector (PSI)	Instrument Air Pressure (PSI)
Mdnite										
0200										
0400										
0600										
0800	7.3	2.1	2.7	16.5	1	2.7	7.4	34	32	75
1000	7.2	3.3	2.4	16.7	1.7	2.3	7.0	34	32	75
1200	7.4	3.2	2.4	16.5	1.1	2	7.0	33	32	75
1400	7.5	2.0	2.5	16.7	1.3	2.4	7.0	32	32	75
1600										
1800										
2000										
2200										

METER READING	AMSOX	STEAM	KWH	CH_4	WATER	H_2SO_4
TODAY	427280	56336556	6007	[illegible]	8356017	[illegible]
YESTERDAY	426180	56319216	6007	[illegible]	8358175	816381
DIFFERENCE						

Chemical Analysis	12-8	8-4	4-12
Ammsox Line (SO_2)		4	
Ammsox Tank (SO_2)		10	13
Ammsox Tank Level (Ft.)		110	101"
Condensate (SO_4)		0	0
		49	45

12-8 RATOR

REMARKS

8-4 OPERATOR Robbins moved pump spot at 6a

REMARKS

447920
438520
9,400

4-12 OPERATOR

REMARKS:

447920

POC-NH_3-10

AMMONIUM SULFATE PLANT

Daily Log Sheet

DATE 2/22/96

	FLOWS					TEMPERATURES							PRESSURE				LEVEL		ANALYSIS					AMMETERS							UTILITIES		
	Sulfuric Acid	Ammonia	Scrubber Liquor	Water to Barometric Leg	Water to Process	East Crystalizer Overflow	West Crystalizer Overflow	Heat Exchange Exit	Dryer Outlet	Product Cooler Outlet	Water Outlet Barometric Leg	Centrifuge Oil	Steam to Heat Exchanger	Crystalizer Vacuum pi	Crystalizer Pres. (Abs.)	Scrubber ΔP	Crystalizer	Surge Tank	Crystalizer	Fines Tank	Settled Solids Crystalizer	+ 14 Mesh	+ 20 Mesh	Elutriation Pump	Cooler Screw	Crystalizer Mixer	Mother Liquor Pump	Slurry Pump	Centrifuge	Dryer Fan	Steam Header Pressure	Steam Pres. on Ejector	Instrument Air Pressure
	GPM	PPH	GPM	GPM	GPM	Deg. F	Deg. F	Deg. F	Deg. F	Deg. F	Deg. F	Deg. F	PSI	IN Hg	IN H_2O	IN H_2O	% F.S.	% F.S.	pH	pH	%	%	%	Amps	Amps	Amps	Amps	Amps	Amps	Amps	PSI	PSI	PSI
00	6	2.4	100	440	5	161	161	181	181	190	150	114	1.5	18.4	63		112	60	3.8	3.8	55.5	80	92	7.5	3.4	24	16.5	14	24	40	32	32	80
00	6	2.4	99	440	5	161	161	181	181	190	150	114	1.5	18.4	63		112	61	4.1	3.4	54.6	90	94	7.5	3.3	24	16.5	14	22	40	34	32	80
00	6	2.4	98	440	5	161	161	181	181	190	136	114	1.8	18.4	63		111	62	4.3	3.4	55.6	96	94	7.5	3.5	24	16.5	14	24	40	34	32	78
00	6	2.4	100	440	5	161	160	181	180	190	158	114	1	18.4	63		112	62	3.7	3.2	55.3	97	94	7.5	3.5	24	16.5	14	23	40	36	32	78
00	6	2.4	100+	440	5	161	161	181	190	190	150	120	.5	18.2	63		112	59	4.0	3.8	54.4 55.6	97 98	100 100	7.5	3.5	24	16.5	14	23	40	34	32	78
00	6	2.4	100+	440	5	161	161	181	181	190	152	120	1.0	18.2	63		112	60	4.0	3.8	55.3 55.0	90 97	98 100	7.5	3.4	24	16.5	14	23	40	32	32	78
00	6	2.4	100+	440	5	161	161	181	181	190	150	112	1.5	18.2	63		112	61	4.0	3.8	54.3 54.2	97 96	100 100	7.5	3.3	24	16.3	13	23	39.5	32	32	75
00	6	2.4	100+	440	5	161	161	181	181	190	148	112	1.5	18.2	63		112	60	3.6 4.0	3.6	54.5 55.7	95 95	100 100	7.5	3.3	24	16.3	13	22	39.5	34	32	72

ETER READING	AMSOX	STEAM	KWH	CH_4	WATER	H_2SO_4
)DAY	477900	56356155	6008	3872997	8371872	832730
ESTERDAY	457220	56336855	6007	[illegible]	[illegible]	[illegible]
FFERENCE						

Chemical Analysis	12-8	8-4	4-12
Ammsox Line (SO_2)		8	11
Ammsox Tank (SO_2)		11	8
Ammsox Tank Level (%)		106	112"
Condensate (SO_4)		0	Zero
2 hrs PH		.52	7.06

8 OPE. .OR

MARKS

Clean Screens WHIZ KID

8-4 OPERATOR Robbins

REMARKS

477900
464500
7,400

4-12 OPERATOR Osiecki

REMARKS:

477900
471900
6,000

POCNH-10

APPENDIX 5 - TEST LOG

APPENDIX 5 - TEST LOG:

There is no additional information for this section.

APPENDIX 6 - CALIBRATION AND QUALITY ASSURANCE PROCEDURES/RESULTS

Table 2.1. ACTIVITY MATRIX FOR CALIBRATION OF EQUIPMENT

Apparatus	Acceptance limits	Frequency and method of measurement	Action if requirements are not met
Wet test meter	Capacity $\geq 3.4\ m^3/h$ ($120\ ft^3/h$); accuracy within ±1.0%	Calibrate initially, and then yearly by liquid displacement	Adjust until specifications are met, or return to manufacturer
Dry gas meter	$Y_i = Y \pm 0.02\ Y$	Calibrate vs wet test meter initially, and when posttest check exceeds $Y \pm 0.05\ Y$	Repair, or replace and then recalibrate
Thermometers	Impinger thermometer ±1°C (2°F); dry gas meter thermometer ±3°C (5.4°F) over range; stack temperature sensor ±1.5% of absolute temperature	Calibrate each initially as a separate component against a mercury-in-glass thermometer; then before each field trip compare each as part of the train with the mercury-in-glass thermometer	Adjust; determine a constant correction factor; or reject
Probe heating system	Capable of maintaining 120° ±14°C (248° ± 25°F) at a flow rate of 20ℓ/min ($0.71\ ft^3$/min)	Calibrate component initially by APTD-0576; if constructed by APTD-0581, or use published calibration curves	Repair, or replace and then reverify the calibration
Barometer	±2.5 mm (0.1 in.) Hg of mercury-in-glass barometer	Calibrate initially vs mercury-in-glass barometer; check before and after each field test	Adjust to agree with a certified barometer
Probe nozzle	Average of three ID measurements of nozzle; difference between high and low ≤0.1 mm (0.004 in.)	Use a micrometer to measure to nearest 0.025 mm (0.001 in.)	Recalibrate, reshape, and sharpen when nozzle becomes nicked, dented, or corroded

(continued)

PROCEDURE FOR WEIGHING FILTERS
BEFORE AND AFTER SAMPLING
(Method 5, Figure 5.5)

Status

_____ 1. Label the filter and/or the petri dish--both with the same label number; label the filter on top and bottom; check each filter visually against the light for irregularities, flaws, and pinhole leaks

_____ 2. Check the desiccator; be sure the lid is sealed tightly and the anhydrous calcium sulfate is dry; if not dry, heat the desiccant in the oven for 2 h at 180°-200°C (350° - 400°F), and let cool in the balance room before putting it back into the desiccator

_____ 3. Take off the lid of the filter container and desiccate the filter for 24 h; during desiccation, be sure that filters are widely spread, and not overlapping

_____ 4. Adjust the analytical balance to zero, and check the accuracy with a 0.500-g Class-S weights (within ±0.5 mg); use tweezers to carefully place the filter on the pan of the balance, and weigh it to the nearest 0.1 mg. The time of weighing should not be >2 min, and the relative humidity should be <50%

Very important: Desiccator should be tightly covered immediately after removing the filter to be weighed; never leave the desiccator open while weighing a sample because samples in the desiccator will be exposed to moisture in the room, which will cause gains in their weights

_____ 5. Put the filter back into the petri dish without the lid, desiccate for ≥6 h and reweigh the filter; the two recorded weights should agree to ±0.5 mg; if not, desiccate for another 6 h and reweigh until weight is constant within ±0.5 mg; keep the tare weight of the filter in file for future use

_____ 6. Be sure the filters that arrived from the field are handled and analyzed whenever possible by the same person who started the project--the person who tared the filters before sampling; use the same balance

(continued)

PROCEDURE FOR ANALYSIS OF ACETONE RINSE SAMPLES
(Method 5, Figure 5.6)

Status

I. Preparing Containers for Shipment

_____ 1. Select the appropriate size and number of bottles to be shipped to the field; include extra bottles

_____ 2. Clean the bottles and caps thoroughly with soap detergent, rinse with tap water, and then rinse at least twice with deionized distilled water

_____ 3. Rinse the clean bottles with acetone to get rid of most of the water; remember that one batch of acetone could be used for more than one container

_____ 4. Check the containers and the caps individually after they are dry to be sure no detergent or other contaminant is present; tightly cap all containers

II. Handling and Analysis of Acetone Rinse Samples

Important: Blanks and samples should have identical analytical treatments; never handle with bare hands any analysis glassware once tared; always use tongs or disposable gloves

_____ 1. Log the samples received from the field, and check each container for leakage; if the sample volume level is marked on the container, check to see if the sample still matches the level, if not, write a note of that

_____ 2. Use a dry, clean glass funnel to transfer the acetone rinse into the dry, clean 250-ml graduated cylinder

_____ 3. Record the volume of the sample to the nearest 1.0 ml, and transfer it into a dry, clean, tared (to the nearest 0.1 mg) 250- or 300-ml beaker, depending on the volume of the sample; add 50 ml to the recorded sample volume to account for the acetone rinse of all containers

(continued)

(continued)

Status

d. Be sure that both sides of the balance are closed when weighing

e. Turn all balance knobs to zero after the weighings

_____ 12. Record the weights of the samples, blanks, and empty beaker; record the date and time, each time a sample is weighed

_____ 13. Desiccate the samples, blanks, and empty beaker for $\geq$6 h; data on the first and second weighings should agree within ±0.5 mg; if not, desiccate again for 6 h and reweigh until consistent data are obtained; after the third trial, consult the supervisor

_____ 14. If there is >2 mg change in the weight of the empty beaker, note it on the analytical data form

_____ 15. Calculate the data recorded on the data forms (Figures 5.3 and 5.4) provided for this analysis

ANALYTICAL BALANCE CALIBRATION FORM

Balance name Ohause Number 1

Classification of standard weights

Date	0.500 g	1.0000 g	10.0000 g	50.0000 g	400.0000 g	Analyst
2/12/90		Balanced			400 gram	JMO
2/13/90		"			400 gm	JohnO
2/15/90		"			400 gram	JMO
All above zeroed then Set at 400 grams for Silica Gel						

Used for both Ammonia Dryer & Cooler Tests

STACK TEMPERATURE SENSOR CALIBRATION DATA FORM

Date 2/12/90 Thermocouple number #2

Ambient temperature 72° °F (Cal 2/6/90) Barometric pressure 25.35 in. Hg

Calibrator JNO Reference: mercury-in-glass Asfm #1

other

Reference point number	Source[a] (specify)	Reference thermometer temperature, °C	Thermocouple potentiometer temperature, °C	Temperature difference,[b] %
32°F	Ice	33°F	33.6°F	-.12
204°F	Boiling Water	204°F	203.7°F	.045
(60" effective length)				

[a]Type of calibration system used.

[b] $\left[\frac{(\text{ref temp, °C} + 273) - (\text{test thermom temp, °C} + 273)}{\text{ref temp, °C} + 273}\right] 100 \leq 1.5\%.$

664 493 663.7 493.6 493 664

Quality Assurance Handbook M5-2.5

Ammo Sulfate
2/12/90

TYPE - PITOT TUBE INSPECTION DATA FORM

Pitot tube assembly level? ✓ yes _____ no

Pitot tube openings damaged? _____ yes (explain below) ✓ no

α_1 = 1 ° (<10°), α_2 = 1 ° (<10°), β_1 = 1 ° (<5°),
β_2 = 0 ° (<5°)

γ = 0 °, θ = 0 °, A = 2.82 cm (in.)

z = A sin γ = 0 cm (in.); <0.32 cm (<1/8 in.),
w = A sin θ = 0 cm (in.); <.08 cm (<1/32 in.)

P_A 1.42 cm (in.) P_b 1.42 cm (in.)

D_t = .95 cm (in.)

Comments: .84 Assigned

Calibration required? _____ yes ✓ no

Dennis

NOZZLE CALIBRATION DATA FORM

Date 2/12/90 Calibrated by [illegible]

Nozzle identification number	Nozzle Diameter[a]			ΔD,[b] mm (~~in.~~)	D_{avg}[c]
	D_1, mm (~~in.~~)	D_2, mm (~~in.~~)	D_3, mm (~~in.~~)		
#2	5.551	5.55	5.55	.001	5.55

where:

[a] $D_{1,2,3}$, = three different nozzles diameters, mm (in.); each diameter must be within (0.025 mm) 0.001 in.

[b] ΔD = maximum difference between any two diameters, mm (in.), $\Delta D \leq$(0.10 mm) 0.004 in.

[c] D_{avg} = average of D_1, D_2, and D_3.

NOZZLE CALIBRATION DATA FORM

Date 2/20/90 Calibrated by [illegible]

Nozzle identification number	Nozzle Diameter[a]			ΔD,[b] mm (in.)	D_{avg}[c]
	D_1, mm (in.)	D_2, mm (in.)	D_3, mm (in.)		
1/16/90 #1	5.05	5.06	5.065	.015	5.058 .199 inches
Recheck #1 OK					

where:

[a] $D_{1,2,3}$, = three different nozzles diameters, mm (in.); each diameter must be within (0.025 mm) 0.001 in.

[b] ΔD = maximum difference between any two diameters, mm (in.), $\Delta D \leq$(0.10 mm) 0.004 in.

[c] D_{avg} = average of D_1, D_2, and D_3.

ANALYTICAL BALANCE CALIBRATION FORM

Balance name Sartorius Number 1

Classification of standard weights Class S

Date	0.500 g	1.0000 g	10.0000 g	50.0000 g	100.0000 g	Analyst
2/20/90	.50000g	1.0000g	10.0000g	49.9999	100.0001	JMO
2/21/90	"	"	"	"	100.0000	JMO
2/23/90	"	"	"	"	100.0000	JMO

ANALYTICAL BALANCE CALIBRATION FORM

Balance name O Hause Number 1

Classification of standard weights

Date	0.500 g	1.0000 g	10.0000 g	50.0000 g	100.0000 g	Analyst
2/20/90		for Silica Gel Zeroed			400 gram	JMO
2/21/90					400 gram	JMO
2/2/90		Recheck Cal				

Calibration of RAC stakesampler amer sulfat # 0067

Calibrated by WHM #12AE-5 2/28/90

R-1

Pb 25.78

Sn 1835

Mod. 2343

RAC ft³	it	ot	DH	t	WHM ft³	temp
215.276	80	76	1.7	0	0	66
223.238	92	80	1.7	10	7.723	66
7.962			1.7	10	7.723	66

$$\Delta H_a \; \frac{.05389}{25.78 \times 538} \left[\frac{526 \times 10}{7.723} \right]^2 = 1.802$$

$$y = \frac{7.723 \times 25.78 \times 542}{7.962 \times 25.90 \times 526} = .995$$

R-2

223.038	84	78	1.7	0	0	66
230.880	94	82	1.7	10	7.694	66
7.842			1.7	10	7.694	66

$$\Delta H_a \; \frac{.05389}{25.78 \times 538} \left[\frac{526 \times 10}{7.694} \right]^2 = 1.82$$

$$y = \frac{7.694 \times 25.78 \times 544}{7.842 \times 25.90 \times 526} = 1.010$$

R-3

230.880	88	82	1.7	0	0	66
238.755	98	84	1.7	10	7.674	66
7.875			1.7	10	7.674	66

$$\Delta H_a \; \frac{.05389}{25.78 \times 543} \left[\frac{526 \times 10}{7.674} \right]^2 = 1.81$$

$$y = \frac{7.674 \times 25.78 \times 548}{7.875 \times 25.90 \times 526} = 1.01$$

avg ΔH_a = 1.81

y = 1.005

Cal of 41" Gasture Length

SS Probe 2/12/90

Calibrated with #2 thermocouple and the Omega HH82 Readout

RAC Rheostat setting	temp
54	252°F

Dennis

Subject 0060

Calibration of the Lab Barometer

2/12/92

The Barometer is Calibrated by calling the US Weather Bureau Located 1 mile west of the Lab. the Elevation for the USWS is 4,454 feet above Sea Level & the Lab is at the same 4,454 ft.

USWS	Lab
25.26	25.26

Dennis

Leak Check of Tedlar Bags

2/12/90

the Bags are filled 3/4 full of air and a weight placed on each. then they are left overnight

the bags used are #0013
#0011
70

Results

All bags held there Volume

Dennis

Calibration of RAC Dry Gas Meter with its inlet and outlet thermometers 2/12/90

thermometers are Calibrated by an ASTM Glass thermometer.

Boiling water

RAC 204°F ASTM 204°F

Ice Bath

RAC 32°F ASTM 32°F

Dennis

Calibration of Lab Impinger thermometer sulfite

2/12/90

Calibrated by an ASTM Class thermometer

RAC	ASTM
Boiling water 204°F	204°F
Ice Bath 32°F	32°F

Dennis

Calibration of RAC Differential press Gage

2/12/90

the Calibration of the force Gage is not needed because the RAC Case used Oil Gage Manometer

Dennis

Calibration of the Porter Tube B-250-2 2/12/70.
Rotometer

Metter setting	Flow Rate	ft³/hr
2	.015	.9
3	.22	1.32

Rem

~~Calibration of RAC Impinger Case~~ wlft
~~Filter Heating Compartment~~ 2/12/90

Cal by using thermocouple #2

RAC setting thermocouple

200

Calibration of the RAC Console 2nd mill 2 Begin Ammo Sulfat

Serial 1835 Mod. 2343 2/6/90

Calibrated by Wet test Meter #12AF-5

Pb 25.35
Lab temp 72°F

Lab V of system at 15" Hg and all the lines were at at Vacuum of 5" Hg

R-1 RAC

ft³	T1	T4	ΔH	time	WTM ft³	+
716.300	76	62	1.8	0	0	64
724.549	90	70	1.8	10	8.221	64
8.249		66-526		10 min		

$$\Delta H_a = \frac{.05706}{25.35 \times 526}\left[\frac{524 \times 10}{8.221}\right]^2 = 1.738$$

$$Y = \frac{8.221 \times 25.35 \times 534}{8.249 \times 25.48 \times 526} = 1.006$$

R-2

724.549	80	72	1.8	0	0	64
732.745	96	76	1.8	10	7.996	64
8.196	541	74-534				

$$\Delta H_a = \frac{.05706}{25.35 \times 534}\left[\frac{524 \times 10}{7.996}\right]^2 = 1.81$$

$$Y = \frac{7.996 \times 25.35 \times 541}{8.196 \times 25.48 \times 524} = 1.002$$

R-3

732.745	86	70	1.8	0	0	64
740.973	100	82	1.8	10	7.955	64
8.228	544.5	76-536				

$$\Delta H_a = \frac{.05706}{25.35 \times 536}\left[\frac{524 \times 10}{7.955}\right]^2 = 1.82$$

$$Y = \frac{7.955 \times 25.35 \times 544.5}{8.228 \times 25.48 \times 534} = .999$$

avg $\Delta H_a = 1.789$
$Y = 1.002$

Dennis

APPENDIX 7 - PROJECT PARTICIPANTS AND TITLES

APPENDIX 7 - PROJECT PARTICIPANTS AND TITLES:

1. Dennis C. Bowman, Environmental Monitoring Technician.

2. John N. Oborn, Environmental Monitoring Technician.

3. Nadeen B. Myers, Environmental Analyst.

4. Norman F. Self, Environmental Control Supervisor.

APPENDIX 8

APPENDIX 8:

I. Sample Port Locations:

A. Dryer Exhaust is 3 diameters downstream and <1 diameter upstream from the nearest disturbance.

B. Cooler Exhaust is >8 diameters downstream and >2 diameters upstream from the nearest disturbance. However, the structure of the sample location is such that only one port can be used. Therefore, we use a 12-point traverse.

II. Sample point descriptions for both dryer and cooler exhausts: 20 inch ducts.

Point	Inches Into Duct
1	1.0
2	1.3
3	2.4
4	3.5
5	5.0
6	7.12
7	12.9
8	15.0
9	16.5
10	17.6
11	18.7
12	19.0

III. Method 5 Sample Train Diagram.

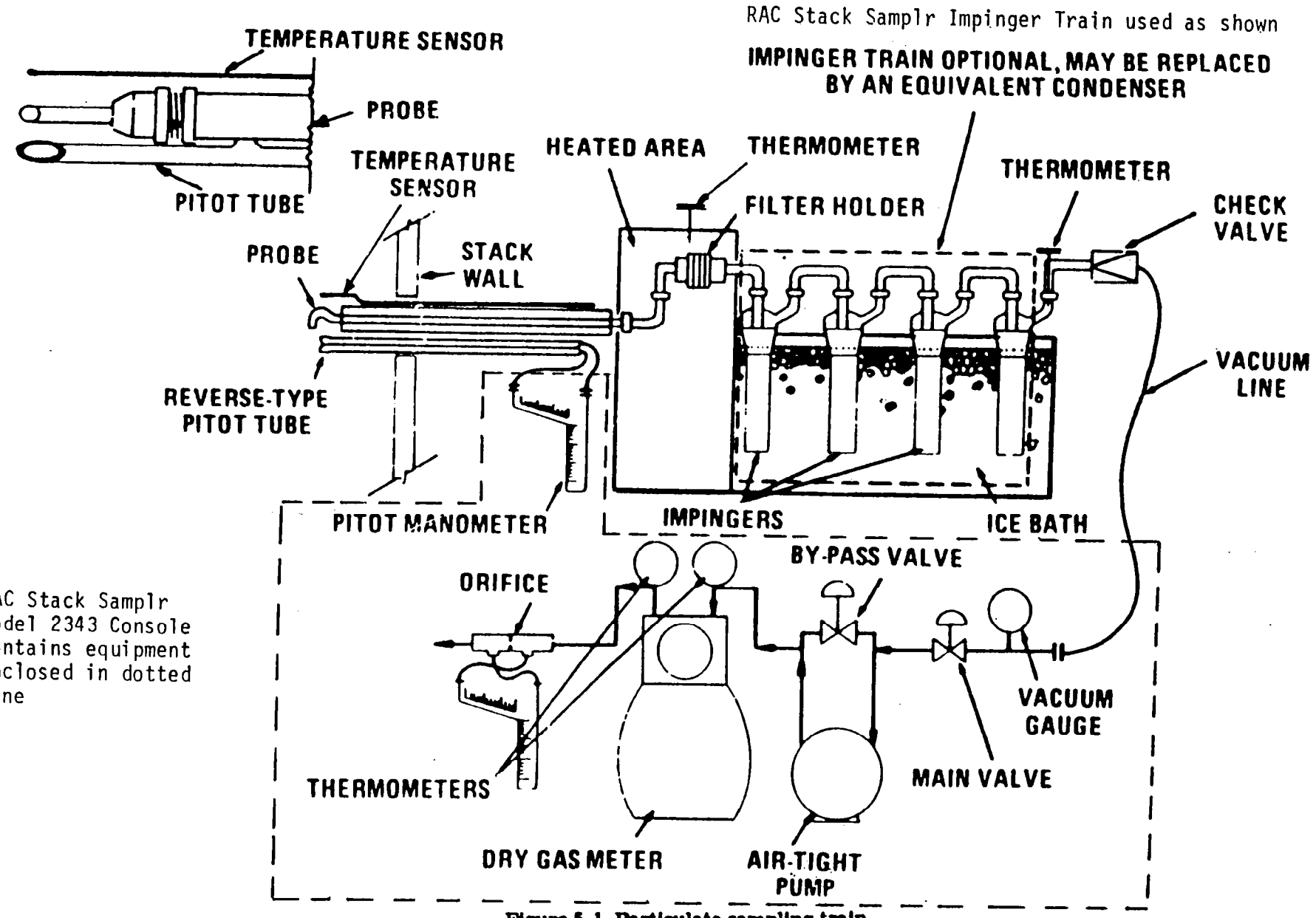

RAC Stack Samplr Model 2343 Console contains equipment enclosed in dotted line

Figure 5-1. Particulate-sampling train.

COOLER PLATE, IN.	[illegible]	[illegible]	11	11	[illegible]	11	[illegible]	12	12	12	12	12
COOLER BED, IN.	17	[illegible]	17	16	[illegible]	17	[illegible]	17	16	16	16	16
CALCINE PLATE, IN.	[illegible]	[illegible]	21	20	[illegible]	20.3	[illegible]	22.5	22	22	20	20
CALCINE BED, IN.	[illegible]	[illegible]	38	39	[illegible]	[illegible]	[illegible]	45	45	45	45	50
HOT CYCLONE, IN.	[illegible]	[illegible]	3	3	3.6	3	2.5	3	3	4	3	4
PREHEAT PLATE, IN.	[illegible]	[illegible]	50	50	[illegible]	[illegible]	[illegible]	50	57	50	50	50
PREHEAT BED, IN.	12	12	13	14	[illegible]	[illegible]	14	14	20	10	11	12
COLD CYCLONE OUT, IN.	[illegible]	30	29	29	[illegible]	[illegible]	[illegible]	17	25	30	30	30
PREHEAT FREEBOARD, IN.	12	14	15	15	-12	-6.5	-11.5	-6	-7	-14	-14	-15

AMPS

MAIN BLOWER	71	75	71	71	70	69	69	68	70	70	71	71
AFTERCOOLER BLOWER	27	27	26	26	26	26	25	24	24	26	26	25
EXHAUST FAN	44	47	45	44	43	42	42	42	41	44	46	45
800 SCRUBBER FAN	60	62	60	58	58	58	58	58	58	58	58	54
ASP. AIR BLOWER	48	[illegible]	48	48	48	48	48	48	48	49	48	45
WET A'C ROT VALVE	2.8	[illegible]	2.8	2.8	2.7	2.7	2.7	2.7	2.9	2.9	2.9	2.9
DRY A'C ROT VALVE	[illegible]	[illegible]	[illegible]	[illegible]	[illegible]	[illegible]	[illegible]	[illegible]	[illegible]	[illegible]	[illegible]	[illegible]
RAW ROCK ROTARY VALVE	1.4	1.4	1.4	1.4	1.2	1.1	1.1	1.1	1.1	1.2	1.3	1
A'C SCREW	11	11	10	11	9	8.5	9	9	9	9	14	9
PRODUCT ELEV.	10	10	8	9	11	13	15	10	12	10	12	10
48" FEED BELT	7	7	7	7	7	7	7	7	7.5	7.5	7.5	7.5
WEIGH BELT	1.8	1.8	1.5	1.8	1.9	1.9	1.9	1.9	2	2	2	2
FEED ELEVATOR	18	18	18	19	19	19	19	19	19	18	18	18
#3 BIN FEED BELT	7	7	7	7	7	7	7	7	7.5	7.5	7.5	7
#1 DRAG	16	16	16	17	18	18	17	16	17	18	16	16
#2 DRAG	[illegible]	27	24	20	22	22	21	21	21	21	21	22
#4 DRAG												

HOURS OPERATED: SHIFT 1 8 SHIFT 2 8HRS. SHIFT 3 8

STOP	START	CHANGE RATE	REASONS

1/13/90

* * * * * * * * * * "A" OPERATOR'S LOG SHEET * * * * * * * * * *

TIME	2400	0200	0400	0600	0800	1000	1200	1400	1600	1800	2000	2200
FEED BIN LEVEL	7/8	Full	Full	Full	7/8	Full	7/8	7/8	Full	7/8		7/8

OIL LEVELS

MAIN BLOWER	[illegible]	OK	OK	OK	OK	OK	[illegible]	[illegible]	OK	OK		OK
AFTERCOOLER BLOWER	[illegible]	OK	OK	OK	OK	OK	[illegible]	[illegible]	OK	OK		OK
800 SCRUBBER FAN	[illegible]	OK	OK	OK	OK	OK	[illegible]	OK	OK	OK		OK
EXHAUST FAN	[illegible]	OK	OK	OK	OK	OK	[illegible]	OK	OK	OK		OK
ASPIRATING AIR BLOWER	[illegible]	OK	OK	OK	OK	OK	[illegible]	OK	OK	OK		OK

BEARING TEMPERATURES

BUFFALO FAN NORTH	[illegible]	[illegible]	77	[illegible]	78	83	86	88	80	78		77
BUFFALO FAN SOUTH	[illegible]	[illegible]	86	11	[illegible]	97	100	100	93	91		88
MAIN BLOWER BEARING	[illegible]	[illegible]	134	[illegible]	135	135	135	135	135	134		134
MAIN BLOWER GEARBOX	[illegible]	[illegible]	119	111	120	120	120	121	120	120		119
AFTERCOOLER EAST	[illegible]	[illegible]	[illegible]	[illegible]	159	160	162	164	162	162		158
AFTERCOOLER WEST	[illegible]	[illegible]	146	[illegible]	147	150	153	155	153	151		147
800 SCRUBBER FAN NORTH												
800 SCRUBBER FAN SOUTH												

OIL PRESSURES

MAIN BLOWER	[illegible]	[illegible]	12	[illegible]	12	12	12	12	12	12		12
BUFFALO FAN	[illegible]	[illegible]	14	[illegible]	14	14	136	14	14	14		14

HOURS OPERATED: SHIFT 1 none SHIFT 2 3 1/2 HRS.

STOP	START	CHANGE RATE
	12 Noon	
21:00		

* * * * * * * * * * INTEGRATOR READIN

#1 CALCINER WEIGHTOMER	#2 CALCINER WEIGHTOMETER	#3 CALCINER WEIGHTOMET
START 23936	START 75360	START 2
END 23956	END 76489	END 2
NATURAL GAS	NATURAL GAS	NATURAL GA
START 12791008	START 6198335	START 2
END 12791009	END 6221302	END 2
AFTERCOOLER WATER	AFTERCOOLER WATER	AFTERCOOLE
START 5000787	START 3216218	START 4
END 5000787	END 3237848	END 8

CALCINER INTERNAL CONE VAL

#1 CALCINER			#2 CALCINER		
Start	Stop	Reasons	Start	Stop	Reasons

* * * * * * * * * * "A" OPERATOR'S LOG

OPERATORS:
SHIFT I [illegible] SHIFT II [illegible] SHIFT III

TIME	2400	0200	0400	0600	0800	1000
ASPIRATING AIRFLOWS						
#1 CALCINER						
#2 CALCINER	900	700	700	700	800	750
#3 CALCINER					1.6	1.6

FLUOVEYOR BLOWER

DISCHARGE AIR TEMP.						
OIL PRESSURE						

AIRSLIDE BLOWER INLET FILTER PRESSURE DROP, INCHES OF WATER GAUGE
SHIFT I 1.4 SHIFT 2 1.4 SHIFT 3

COMMENTS:

1/13/90

********** CALCINERS OPERATING LOG SHEET **********
300 CALCINER

OPERATORS:
SHIFT I Howard SHIFT II Burt SHIFT III /

SHIFT SUPERVISORS:
SHIFT I _____ SHIFT II _____ SHIFT III ___

ME	2400	0200	0400	0600	0800	1000	1200	1400	1600	1800	2000	2200
:D LEVELS												
PREHEAT BED	17	15	18	18	17	30	20	19	19	17	18	18
CALCINE BED	50	50	50	50	49	49	45	47	45	45	51	50
COOLING COMP BED	12	12	12	12	12	12	12	12	12	12	12	12
AFTERCOOLER BED	27	27	30	27	30	31	33	30	27	28	30	30
:MPERATURES												
COOLING COMP BED	162	[illegible]	151	153	158	162	162	165	162	158	153	152
COOLING COMP FBD	157	[illegible]	155	157	158	165	166	168	166	161	157	156
CALCINE BED NE	1301	[illegible]	1348	1324	1327	[illegible]	1358	1312	1401	1356	1359	1362
CALCINE BED SE	1350	[illegible]	1350	1332	1362	[illegible]	1364	1341	1299	1365	1360	1364
CALCINE BED NW	1355	[illegible]	1355	1337	1360	[illegible]	1358	1347	1403	1362	1362	1367
CALCINE BED SW	1330	[illegible]	1330	1317	1333	[illegible]	1340	1330	1370	1335	1336	1344
CALCINE FREEBD	1427	[illegible]	1427	1416	1420	1402	1395	1366	1356	1416	1424	1437
PREHEAT BED	342	[illegible]	342	329	302	337	310	315	314	358	348	325
PREHEAT FREEBD	311	[illegible]	311	304	319	319	297	299	303	308	313	297
PRIMARY COLD CYCL	286	[illegible]	286	277	292	[illegible]	317	267	265	261	282	272
SEC COLD CYCLONE	264	[illegible]	264	[illegible]	268	[illegible]	261	252	251	257	260	254
WEST HOT CYCLONE	508	[illegible]	508	514	507	[illegible]	467	450	433	510	485	479
EAST HOT CYCLONE	677	[illegible]	677	671	672	658	641	643	659	693	692	692
AFTERCOOLER BED	[illegible]	[illegible]	513	552	553	661	531	558	600	658	644	442
PRECIPITATOR			255	247								
SCRUBBER FAN	282	[illegible]	286	282	264	[illegible]	241	241	241	250	259	246
RAW ROCK	1156	[illegible]	271	308	296	[illegible]	283	262	262	[illegible]	290	228
FLOWS												
ROCK FEED, TPH	101	104	104	105	104	102	102	103	102	103	102	103
RAW ROCK ROTARY T.P.H.	[illegible]	[illegible]	85	85	85	85	85	85	85	85	85	85
CALCINE AIR, SCFM	13600	[illegible]	13600	13600	13440	10760	13120	13120	12120	13600	13600	13600
OXYGEN, %	0	[illegible]	0	[illegible]	0	0	0	0	0	0	.2	.1
GAS, SCFM	0				0	0	[illegible]	0	0	0	0	0
CALCINE H20, GPM	36	30	28	26	0	0	0	0	0	0	0	0
PREHEAT H20, GPM	[illegible]				25	0	20	0	0	0	0	0
COAL ADDITION, %	[illegible]				0	0	0	0	0	0	0	0
A'C FEED AIR, SCFM	[illegible]	[illegible]	4600	[illegible]	4800	3750	4150	3700	3200	4200	4120	4600
A'C DIS AIR, SCFM	[illegible]	2500	2500	[illegible]	[illegible]	2000	2500	2000	[illegible]	2400	2200	2600
PRESSURES												
COLD WINDBOX, PSI	[illegible]	[illegible]	5.9	5.9	5.9	5.9	[illegible]	5.9	5.9	5.9	5.9	5.8
COOLER PLATE, IN.	11	11	11	11	[illegible]	11	[illegible]	12	12	12	12	12
COOLER BED, IN.	17	[illegible]	16	16	17	17	[illegible]	17	16	16	16	16
CALCINE PLATE, IN.	[illegible]	[illegible]	21	20	56.5	20.2	21.3	22.5	22	22	20	20
CALCINE BED, IN.	[illegible]	[illegible]	38	39	[illegible]	45	[illegible]	45	45	45	45	50
HOT CYCLONE, IN.	[illegible]	[illegible]	3	3	3.6	3	3.5	3	3	11	3	7
PREHEAT PLATE, IN.	[illegible]	[illegible]	50	50	[illegible]	[illegible]	[illegible]	50	50	50	50	50
PREHEAT BED, IN.	[illegible]	[illegible]	13	14	[illegible]	[illegible]	14	14	23	13	11	12
COLD CYCLONE OUT, IN.	[illegible]	30	29	28	[illegible]	[illegible]	[illegible]	17	23	30	30	30
PREHEAT FREEBOARD, IN.	7	14	15	15	[illegible]	[illegible]	[illegible]	-6	[illegible]	-14	-14	-15
AMPS												
MAIN BLOWER	71	75	71	71	70	67	62	66	70	70	71	71
AFTERCOOLER BLOWER	27	[illegible]	26	26	26	20	20	20	24	26	26	25
EXHAUST FAN	44	[illegible]	40	50	43	40	42	42	41	44	46	45
800 SCRUBBER FAN	60	62	60	58	58	58	[illegible]	56	58	58	58	54
ASP. AIR BLOWER	48	[illegible]	48	48	48	[illegible]	49	48	48	49	48	49
WET A'C ROT VALVE	2.8	[illegible]	2.8	[illegible]	2.7	[illegible]	2.7	2.7	2.9	2.9	2.9	2.9
DRY A'C ROT VALVE	[illegible]	[illegible]	[illegible]	[illegible]	[illegible]	[illegible]	[illegible]	[illegible]	[illegible]	[illegible]	[illegible]	[illegible]
RAW ROCK ROTARY VALVE	1.4	1.4	1.4	1.4	1.2	1.1	1.1	1.1	1.1	1.2	1.3	1
A'C SCREW	11	[illegible]	10	11	9	8.5	9	9	9	9	14	9
PRODUCT ELEV.	10	10	8	9	11	13	13	10	12	10	12	10
48" FEED BELT	7	7	7	7	7	7	7	7	7.5	7.5	7.5	7.5
WEIGH BELT	1.8	1.8	1.8	1.8	1.7	[illegible]	1.4	1.9	2	2	2	2
FEED ELEVATOR	13	18	13	16	13	11	13	11	16	18	18	18
#3 BIN FEED BELT	[illegible]	[illegible]	7	7	7	7	7	7	7.5	7.5	7.5	7
#1 DRAG	[illegible]	[illegible]	16	17	18	18	17	16	17	18	16	16
#2 DRAG	[illegible]	21	24	20	22	22	21	21	21	21	21	22
#4 DRAG												

HOURS OPERATED: SHIFT 1 8 SHIFT 2 8 HRS. SHIFT 3 8

STOP	START	CHANGE RATE	REASONS

********** AIRSLIDES AND FLUOVI

TIME	2400	0200	0400	0600	0800	1000
HEADER PRESSURE, PSI	1.6	1.6	1.6	1.6	1.7	1.7
#1 FLOW, CFM	[illegible]	30	30	30	30	30
#2 FLOW, CFM	[illegible]	150	155	160	145	140
#3 FLOW, CFM	[illegible]	1400	1400	1400	1400	140
STORAGE FLOW, CFM	[illegible]	500	500	500	525	52
RETURN FLOW, CFM	[illegible]	1800	1800	1800	1800	180
EAST/WEST FLOW, CFM						
AIRSLIDE TEMPERATURES						
#1 NORTH						
#1 SOUTH						
#2 NORTH	347	356	361	354	344	360
#2 SOUTH					352	351
#3 NORTH						
#3 SOUTH	324	331	344	330	324	33
WEST						
EAST	324	364	342	326	388	33
STORAGE						
AMPS						
1900 MAIN BLOWER	29	29	29	28	29	2
1400 MAIN BLOWER	[illegible]	24	24	2[illegible]	20	2
1900 SPARE BLOWER						
NORTH ROLL FILTER FAN						
SOUTH ROLL FILTER FAN		25	25	25	24	
NORTH SPIRAL FILT FAN						
SOUTH SPIRAL FILT FAN						
#15 SILO BAGHOUSE						
FLUOVEYOR						
MAXIMUM CYCLE PRESS.	X		X	X	/	
COMP AMPS, MAX PRESS.						
CYCLE DURATION						

HOURS OPERATED: SHIFT 1 none SHIFT 2 3 1/2 HR

STOP	START	CHANGE RATE	
	12 Noon		
21:00			

********** INTEGRATOR RE/

#1 CALCINER WEIGHTOMER	#2 CALCINER WEIGHTOMETER	#3 CA WEIGI
START 23936	START 75360	STAI
END 25 3362	END [illegible]	END
NATURAL GAS	NATURAL GAS	NATUI
START 12791009	START 6159335	STAI
END 12791009	END 6221302	END
AFTERCOOLER WATER	AFTERCOOLER WATER	AFTEI
START 5000787	START 3216718	STA
END 5000787	END 3237844	END

CALCINER INTERNAL CONE

#1 CALCINER			#2 CALCINER		
Start	Stop	Reasons	Start	Stop	

1/14/90

CALCINE BED SE	[illegible]	1340	1374	[illegible]	1328	1333	1306	1319	1337	1345	1352	1349
CALCINE BED NW	[illegible]	1393	1373	[illegible]	1331	1336	1309	1318	1332	1346	1354	1350
CALCINE BED SW	[illegible]	1366	1371	[illegible]	1307	1315	1285	1296	1308	1326	1330	1337
CALCINE FREEBD	[illegible]	1453	1450	1450	1346	1361	1327	1338	1349	1355	1361	1358
PREHEAT BED	[illegible]	345	354	355	318	315	298	303	311	303	301	334
PREHEAT FREEBD	[illegible]	318	326	322	315	297	294	299	288	280	279	300
PRIMARY COLD CYCL	[illegible]	288	292	296	289	266	251	256	260	256	255	275
SEC COLD CYCLONE	[illegible]	264	270	268	264	248	235	238	241	237	239	251
WEST HOT CYCLONE	[illegible]	495	515	494	456	457	457	453	428	459	468	506
EAST HOT CYCLONE	[illegible]	713	716	763	709	651	632	619	628	659	620	725
AFTERCOOLER BED	[illegible]	658	658	[illegible]	622	489	394	546	526	455	433	407
PRECIPITATOR	[illegible]	258	264	[illegible]								
SCRUBBER FAN	[illegible]	300	292	[illegible]	259	240	224	229	229	232	235	255
RAW ROCK	[illegible]	487	247	[illegible]	295	251	268	246	266	265	274	279

RETURN FLOW, CFM	
EAST/WEST FLOW, CFM	1800 / 1800

AIRSLIDE TEMPERATURES

#1 NORTH		
#1 SOUTH		
#2 NORTH	255	260
#2 SOUTH		
#3 NORTH		
#3 SOUTH	373	380
WEST		
EAST	363	370
STORAGE		

FLOWS

ROCK FEED, TPH	107	104	101	107	105	103	100	102	102	103	102	107
RAW ROCK ROTARY T.P.H.	85	85	85	85	85	85	85	85	85	85	85	85
CALCINE AIR, SCFM	13600	13600	13600	13600	13280	12640	12860	12800	12800	12800	12800	12800
OXYGEN, %	0	0	0	0	0	0	0	0	0	0	.2	.2
GAS, SCFM						0	0	412.5	1180	0	0	0
CALCINE H20, GPM						0	0	0	0	0	0	0
PREHEAT H20, GPM					0	0	0	0	0	0	0	0
COAL ADDITION, %						0	0	0	0	0	0	0
A'C FEED AIR, SCFM	4600	4600	4600	4600	4400	4700	5000	5250	5500	4800	4500	4100
A'C DIS AIR, SCFM	2600	2700	2600	2600	2400	2700	2950	3150	3100	2900	3000	3100

AMPS

1900 MAIN BLOWER	29 / 29
1400 MAIN BLOWER	24 / 24
1900 SPARE BLOWER	
NORTH ROLL FILTER FAN	
SOUTH ROLL FILTER FAN	
NORTH SPIRAL FILT FAN	
SOUTH SPIRAL FILT FAN	
#15 SILO BAGHOUSE	

FLUOVEYOR

MAXIMUM CYCLE PRESS.	X	X
COMP AMPS, MAX PRESS.	X	X
CYCLE DURATION	X	X

PRESSURES

COLD WINDBOX, PSI	5.8	5.8	5.8	5.9	5.7	5.7	5.6	5.5	5.6	5.6	5.7	5.6
COOLER PLATE, IN.	13	13	13	13	12	12	11	12	12	12	12	12
COOLER BED, IN.	17	17	17	17	17	17	17	17	16	16	16	16
CALCINE PLATE, IN.	13	18	18	18	21.1	19.6	27.6	26.8	22	18	20	18
CALCINE BED, IN.	50	50	50	50	51	50	46	45	55	55	55	55
HOT CYCLONE, IN.	4	4	4	4	3.6	4	3	3.2	4	4	3	3
PREHEAT PLATE, IN.	50	50	50	50	50	50	50	50	50	50	50	50
PREHEAT BED, IN.	8	8	8	8	11	9	13	12	12	12	13	11
COLD CYCLONE OUT, IN.	30	30	30	30	30	30	30	30	30	30	30	30
PREHEAT FREEBOARD, IN.	15	15	14	14	-15	-15	-15	-15	-15	-15	-15	-15

HOURS OPERATED: SHIFT 1 none

STOP	START	CHANGE RATE
1500pm	12:30pm	

AMPS

MAIN BLOWER	71	71	71	71	71	69	68	68	69	69	70	70
AFTERCOOLER BLOWER	25	25	25	25	25	24	22	26	28	28	28	28
EXHAUST FAN	44	44	44	44	44	44	44	44	44	45	45	45
800 SCRUBBER FAN	60	60	60	60	60	[illegible]	[illegible]	[illegible]	59	59	59	59
ASP. AIR BLOWER	48	48	48	48	48	46	47	46	48	48	48	48
WET A'C ROT VALVE	2.8	2.8	2.8	2.8	2.7	2.7	2.7	2.7	2.8	2.8	2.8	2.8
DRY A'C ROT VALVE	1.3	1.3	1.3	1.3	1.3	1.3	1.3	1.3	1.4	1.4	1.4	1.4
RAW ROCK ROTARY VALVE	1.6	1.6	1.6	1.6	1.1	1.1	1.1	1.2	1.1	1	1	1.1
A'C SCREW	8	8	8	8	7	8.5	8.5	9.5	9	14	9	9
PRODUCT ELEV.	12	12	12	11	13	10	9	14	10	10	15	10
48" FEED BELT	7	7	7	7	7	7	7	7	7.5	7.5	7.5	7.5
WEIGH BELT	2	2	2	2	2	2	1.9	1.9	2	2	1.9	1.9
FEED ELEVATOR	18	18	18	18	19	18	18	18	19	18	19	18
#3 BIN FEED BELT	7	7	7	7	7	7	7	7	7.5	7.5	7.5	7.5
#1 DRAG	16	16	16	16	18	16	16	15	16	15	18	16
#2 DRAG	19	19	20	21	22	21	21	20	21	21	22	21
#4 DRAG												

HOURS OPERATED: SHIFT 1 8 SHIFT 2 8HRS SHIFT 3 8

STOP	START	CHANGE RATE	REASONS

* * * * * * * * * * "A" OPERATOR'S LOG SHEET * * * * * * * * * *

TIME	2400	0200	0400	0600	0800	1000	1200	1400	1600	1800	2000	2200
FEED BIN LEVEL	9/10	9/10	3/4	Full	3/4	3/4	1/4	7/8	7/10		1/10	1/8

* * * * * * * * * *

#1 CALCINER WEIGHTOMER
START 23936
END 23936

#2 CALCINER WEIGHTOMETE
START 76
END 7

NATURAL GAS
START 12291009
END 12291009

NATURAL GA
START 62
END 62

AFTERCOOLER WATER
START 50002787
END 50002787

AFTERCOOLEF
START 3
END 32

CALCINER

#1 CALCINER

Start	Stop	Reasons

* * * * * * * * * * *

OPERATORS:
SHIFT I D. Byington SHIFT II

TIME	2400	0200
ASPIRATING AIRFLOWS		
#1 CALCINER		
#2 CALCINER	900	900
#3 CALCINER		

FLUOVEYOR BLOWER

COOLER PLATE, IN.	[illegible]	[illegible]	11	11	12	11	[illegible]	12	12	[illegible]	12	12
COOLER BED, IN.	17	[illegible]	16	16	17	17	17	17	16	16	16	16
CALCINE PLATE, IN.	[illegible]	[illegible]	21	20	20.5	20.3	21.3	23.5	22	22	20	20
CALCINE BED, IN.	[illegible]	[illegible]	38	39	45	45	42	45	45	45	45	50
HOT CYCLONE, IN.	[illegible]	[illegible]	3	3	3.5	3	3.5	3	3	4	3	7
PREHEAT PLATE, IN.	[illegible]	[illegible]	50	50	[illegible]	[illegible]	[illegible]	50	50	50	50	50
PREHEAT BED, IN.	[illegible]	[illegible]	13	14	[illegible]	[illegible]	14	14	20	18	11	12
COLD CYCLONE OUT, IN.	[illegible]	30	29	29	[illegible]	[illegible]	[illegible]	17	[illegible]	30	30	30
PREHEAT FREEBOARD, IN.	[illegible]	14	15	15	[illegible]	[illegible]	[illegible]	-6	-7	-14	-14	-15

AMPS

MAIN BLOWER	71	75	71	71	70	69	69	68	70	70	71	71
AFTERCOOLER BLOWER	27	[illegible]	26	26	26	[illegible]	[illegible]	24	24	26	26	25
EXHAUST FAN	44	[illegible]	44	44	43	42	[illegible]	42	41	44	46	45
800 SCRUBBER FAN	60	62	60	58	58	[illegible]	[illegible]	58	58	58	58	54
ASP. AIR BLOWER	48	[illegible]	48	48	48	[illegible]	[illegible]	48	48	48	48	49
WET A'C ROT VALVE	[illegible]	[illegible]	2.8	[illegible]	2.7	[illegible]	[illegible]	2.7	2.7	2.9	2.9	2.9
DRY A'C ROT VALVE	[illegible]	[illegible]	1.3	[illegible]	[illegible]	[illegible]	[illegible]	[illegible]	[illegible]	[illegible]	[illegible]	1.4
RAW ROCK ROTARY VALVE	1.4	[illegible]	1.4	1.4	1.2	1.1	1.1	1.1	1.1	1.2	1.3	1
A'C SCREW	11	7	10	11	9	8.5	9	9	9	9	14	9
PRODUCT ELEV.	10	[illegible]	8	9	11	10	10	10	12	10	12	10
48" FEED BELT	7	7	7	7	7	7	[illegible]	7	7.5	7.5	7.5	7.5
WEIGH BELT	1.6	1.5	1.5	1.8	1.7	[illegible]	[illegible]	1.9	2	2	2	2
FEED ELEVATOR	17	15	17	17	17	17	[illegible]	17	17	18	18	18
#3 BIN FEED BELT	[illegible]	[illegible]	7	7	7	7	[illegible]	7	7.5	7.5	7.5	7
#1 DRAG	[illegible]	[illegible]	16	17	18	18	17	16	17	17	16	16
#2 DRAG	[illegible]	21	24	20	22	22	21	21	21	21	21	22
#4 DRAG												

HOURS OPERATED: SHIFT 1 8 SHIFT 2 8 HRS. SHIFT 3 8

STOP	START	CHANGE RATE	REASONS

* * * * * * * * * * "A" OPERATOR'S LOG SHEET * * * * * * * * * *

TIME	2400	0200	0400	0600	0800	1000	1200	1400	1600	1800	2000	2200
FEED BIN LEVEL	7/8	Full	Full	Full	7/8	Full	7/8	7/8	Full	7/8		7/8

OIL LEVELS

MAIN BLOWER	[illegible]	OK	OK	OK	OK	OK	[illegible]	[illegible]	OK	OK		OK
AFTERCOOLER BLOWER	[illegible]	OK	OK	OK	OK	OK	[illegible]	[illegible]	[illegible]	OK		OK
800 SCRUBBER FAN	[illegible]	OK	OK	OK	OK	OK	[illegible]	[illegible]	OK	OK		OK
EXHAUST FAN	[illegible]	[illegible]	OK	OK	OK	OK	[illegible]	[illegible]	OK	OK		OK
ASPIRATING AIR BLOWER	[illegible]	[illegible]	OK	OK	OK	OK	[illegible]	[illegible]	OK	OK		OK

BEARING TEMPERATURES

BUFFALO FAN NORTH	[illegible]	[illegible]	77	[illegible]	76	83	86	88	80	78		77
BUFFALO FAN SOUTH	[illegible]	[illegible]	86	11	[illegible]	97	100	100	93	91		88
MAIN BLOWER BEARING	[illegible]	135	134	137	135	135	135	135	135	134		134
MAIN BLOWER GEARBOX	[illegible]	120	119	111	120	128	120	121	120	120		119
AFTERCOOLER EAST	[illegible]	[illegible]	[illegible]	[illegible]	159	160	162	164	162	162		158
AFTERCOOLER WEST	[illegible]	[illegible]	[illegible]	[illegible]	147	150	153	155	153	151		147
800 SCRUBBER FAN NORTH												
800 SCRUBBER FAN SOUTH												

OIL PRESSURES

MAIN BLOWER	[illegible]	[illegible]	12	10	12	12	12	12	12	12		12
BUFFALO FAN	[illegible]	[illegible]	14	15	17	14	136	14	14	14		14

HOURS OPERATED: SHIFT 1 [illegible] SHIFT 2 3 1/2 HRS.

STOP	START	CHANGE RATE
	12 Noon	
21:00		

* * * * * * * * * * INTEGRATOR READI

#1 CALCINER WEIGHTOMER	#2 CALCINER WEIGHTOMETER	#3 CALCINE WEIGHTOM
START 23936	START 75360	START
END 23936	END 76487	END
NATURAL GAS	NATURAL GAS	NATURAL
START 1279 1009	START 619935	START
END 1279 1009	END 621302	END
AFTERCOOLER WATER	AFTERCOOLER WATER	AFTERCOO
START 5000787	START 3216718	START
END 5000787	END 3237844	END

CALCINER INTERNAL CONE VA					
#1 CALCINER			#2 CALCINER		
Start	Stop	Reasons	Start	Stop	Reaso

* * * * * * * * * * "A" OPERATOR'S LOG

OPERATORS:
SHIFT I [illegible] SHIFT II [illegible] SHIFT III

TIME	2400	0200	0400	0600	0800	1000
ASPIRATING AIRFLOWS						
#1 CALCINER						
#2 CALCINER	700	700	700	700	800	75
#3 CALCINER					1.6	1.

FEEDYEYOR BLOWER						
DISCHARGE AIR TEMP.						
OIL PRESSURE						

AIRSLIDE BLOWER INLET FILTER PRESSURE DROP, INCHES OF WATER GAUGE
SHIFT 1 1.4 SHIFT 2 1.4 SHIFT 3

COMMENTS:

1/12/90

EPA METHOD #7 NO_x SAMPLING

LOCATION: [illegible]

DATE: 1/11/90 TIME

TECHS:

TEST:

OBSERVER:

BAROMETRIC PRESS: Initial 25.68 Final

AMBIENT TEMP:

SAMPLE NO.	FLASH NO.	FLASH VOL (ML)	ABS SOLN VOL (ML)	TIME	LOSS OF VAC OVER ONE MINUTE	INITIAL COND FLASH				FINAL COND FLASH				ΔP OF CENTER POINT
						cm Hg	IN Hg	°F.	°R	cm Hg	IN Hg	°F.	°R	
1	12	1976	25		0	1.3	.51	68	528	59.3	23.35	68	528	
2	6	1996	25		0	2.3	.91	68		55.5	21.8	68		
3	13	1971	25		0	2.2	.87	68		57.0	22.4	68		
4	1	2014	25		0	2.8	1.1	68		60.8	23.94	68		

(12) 45.2 − 43.9 = 1.3

(6) 45.3 − 43.0 = 2.3

(13) 45.2 − 43.0 = 2.2

(1) 45.5 − 42.7 = 2.8

(12) 73.7 − 14.4 = 59.3

(6) 71.8 − 16.3 = 55.5

(13) 72.5 − 15.5 = 57.0

(1) 74.4 − 13.6 = 60.8

SPECTROANALYSIS DATA DATE: 1/16/90 ANALYST: KBell

SAMPLE NAME/SOURCE	DATE/ CODE	ADJUSTMENT D.F.	ADJUSTMENT ALIQ	READ OUT CONC	READ OUT ABS	FINAL CALCULATION PPM PO4-P	NH3-N	KTN	NO3-N	SO4	pH
Std. µg NO_2	50µg				.081						
	100µg				.164						
	150µg				.249	$K_c = 50$	$.081 + 2(.164) + 3(.249) + 4(.333)$				
	200µg				.333		$.081^2 + .164^2 + .249^2 + .333^2$				
Control 100µg	—				.167	= 100.8					
						$K_c =$ 602.868				F = 1	
Flask	1	5			.082	$m = 5K_c(.082) =$ 247					
	6	5			.140	$m = 5K_c(.140) =$ 422					
	12	5			.051	$m = 5K_c(.051) =$ 154					
	13	5			.070	$m = 5K_c(.070) =$ 211					
							average m = 258 µg NO_2				

PLANT NAME: J. R. Simplot Company

LOCATION: Pocatello, ID, Hwy 30 W, 3 Miles North of City

SOURCE SAMPLED: Ammonium Sulfate Plant

TESTING COMPANY (IF OTHER THAN PLANT ENVIRONMENTAL PERSONNEL): _____

CERTIFICATION:

1. Test Team Leader:

I hereby certify that the test detailed in this report was accomplished in conformance with IDAPA 16.01.1010 (Rules and Regulations for the Control of Air Pollution in Idaho, Sampling and Analytical Procedures) and the procedures Manual for Air Pollution Control. The results submitted herein are accurate and true to the best of my knowledge.

NAME (print): Dennis C. Bowman

SIGNATURE: Dennis C Bowman DATE: 5/4/90

TITLE: Environemontal Monitoring Technician

AFFILIATION: Plant Environmental <x> Outside Firm < > (see above).

2. Test Team Report Reviewer.

I hereby certify that I have reviewed this report and find it to be true and accurate, and in conformance with IDAPA 16.01.1010 (Rules and Regulations for the Control of Air Pollution in Idaho, Sampling and Analytical Procedures) and the Procedures Manual for Air Pollution Control to the best of my knowledge.

NAME (print): Norman F. Self

SIGNATURE: Norman Self DATE: 5/4/90

TITLE: Environmoental Control Supervisor

AFFILIATION: Plant Environmental <x> Outside Firm < > (see above).

INTRODUCTION==========

1. If test purpose was for air permit compliance monitoring, indicate <x> and go to the next section; otherwise explain: _____

2. For the source named on cover page, give test location(s), and describe type of process. Location(s): (1) Dryer venturi scrubber fan outlet; (2) cooler cyclone fan outlet.

Process: Production of ammonium sulfate fertilizer 21-0-0. Reaction, crystallization, drying, cooling and conveying.

3. List test dates: February 14, 15, 20, 21 and 22, 1990

4. List pollutants tested: Particulate from dryer and cooler

5. List EPA test methods used: 40 CFR, Part 60, Appendix A, Method 5; 40 CFR, Part 60, Appendix A, Method 9

6. Were there any deviations from the above methods? Yes < > No <x> If yes, list Appendix number where deviations are explained: _____

7. Was observer(s) present? Yes < > No <x> If yes, give name(s) and affiliation(s): _____

8. List other information as needed: _____

6.18

PUBLIC RECORD RELEASE REQUEST

1. REQUEST RELEASE DATE ASAP
2. REQUESTING AGENCY PACIFIC ENVIRONMENTAL SERVICES PHONE NO. (818) 856-1400
3. AGENCY ADDRESS 13100 BROOKS DR, BALDWIN PARK, CA 91706
   FOR EPA CONTRACT - AP42 UPDATE.
4. INDIVIDUAL REQUESTING S. HUGH BROWN PHONE NO. (SAME)
5. INDIVIDUAL ADDRESS (SAME)

FILE ADDRESS	ITEM REQUESTED	DATE	PURPOSE OF REQUEST
	SOURCE TESTS OF J.R. SIMPLOT CO. IN LATHROP	4-9-92	AMMONIUM SULFATE AP-42 UPDATE

*ASTERISK ITEMS REQUESTED FOR PHOTOCOPYING

SIGNATURE OF REQUESTING PARTY S. Hugh Brown DATE 4-9-92

SAN JOAQUIN COUNTY APCD USE ONLY

PROJECTED RELEASE DATE

SIGNATURE OF RELEASING OFFICIAL DATE

NAMES OF STAFF MEMBERS INVOLVED IN THE RELEASE AND MONITORING OF THE RECORDS.

APF-19

OCCIDENTAL CHEMICAL COMPANY - LATHROP

LABORATORY REPORT

JR. SIMPLOT IN LATHROP

4 Pages

TITLE: AMMONIUM SULFATE PLANT STACK TEST

DATE: November 25, 1981

BY: K. Stetler

The ammonium sulfate plant stack was tested for ammonia and particulate emissions according to EPA Method No. 5. Field data and calculations are attached and the data summarized below.

Date Tested:	11-20-81
Time Tested:	9:25 am to 11:05 am
Air Discharge:	2077 DSCFM
Ammonia (NH_3) Emissions:	0.22 lbs. NH_3/ton product (4.85 lbs./hr.)
Particulate Emissions:	0.047 grains/DSCF 0.83 LBS/HR
Production Rate:	22 tons/hour (528 tons/day)

RECEIVED
1981
ENVIRONMENTAL

DISTRIBUTION:

W. Beyett
R. Edson
L. Hemman
D. Kirk
D. Mueller
G. Reid
K. Stetler
FILE

FORM L-8

OCCIDENTAL CHEMICAL COMPANY - LATHROP

LABORATORY REPORT

4 Pages

TITLE: AMMONIUM SULFATE PLANT STACK TEST

DATE: November 25, 1981

BY: K. Stetler

The ammonium sulfate plant stack was tested for ammonia and particulate emissions according to EPA Method No. 5. Field data and calculations are attached and the data summarized below.

Date Tested:	11-20-81
Time Tested:	9:25 am to 11:05 am
Air Discharge:	2077 DSCFM
Ammonia (NH_3) Emissions:	0.22 lbs. NH_3/ton product (4.85 lbs./hr.)
Particulate Emissions:	0.047 grains/DSCF 0.83 lbs/hr
Production Rate:	22 tons/hour (528 tons/day)

RECEIVED
1981
ENVIRONMENTAL

DISTRIBUTION:

W. Beyett
R. Edson
L. Hemman
D. Kirk
D. Mueller
G. Reid
K. Stetler
FILE

FORM L-8

STACK SAMPLING FIELD DATA
RAC STAKSAMPLR

STACK: Ammonium Sulfate Plant

PROCESS DATA: 16 & 20 GPM H_2SO_4 (2 Saturators)
22.0 tons/hr. $(NH_4)_2SO_4$
Not Using Condenser Water

STACK DIAMETER: 36" STACK AREA (A): 7.07 $FT.^2$

STACK GAS PRESSURE (P_S): _____ INCHES HG.

STACK GAS: WET BULB °F: 196 DRY BULB °F: 196

DATE: November 20, 1981 TIME: 9:25 am - 11:05 am

SAMPLING PERSONNEL: K. Stetler, D. McCready, & R. Percival

AMBIENT TEMPERATURE °F: 67° F

BAROMETRIC PRESSURE (P_B): 30.15

STARTING C FACTOR: - off scale

NOZZLE DIAMETER (D): 0.313 INCHES

DEW POINT °F: 196 VOL. % H_2O: 72.2

GAS METER READING: TEST END 368.043 TEST START 354.283
CUBIC FEET METERED (V_T): 13.760
FILTER TARE WEIGHT, GRAMS: _____

IMPINGER VOLUME: TEST END 1290 TEST START 600
MLS. CONDENSED: 690
TOTAL H_2O COLLECTED (V_C): 695.6

SILICA GEL WEIGHT: ENDING 660.6 STARTING 655.0
GAIN (GMS): 5.6

NT	INCHES FROM PORT	ΔP	$\sqrt{\Delta P}$	ΔH ORIFICE	SAMPLE TIME, MIN.	VACUUM IN. HG.	METER CFM	TEMPERATURES °F STACK	PROBE	IMPINGER	FILTER	METER	METER	NOTES
	1.00	0.01	0.1000	0.01	5	0.5	0.037	196	200	56	235	73	70	
	2.41	0.02	0.1414	0.02	5	0.5	0.058	196	200	76	260	80	73	
	4.25	0.01	0.1000	0.01	5	0.5	0.037	196	200	74	270	82	74	
	6.37	0.01	0.1000	0.01	5	0.5	0.037	196	200	74	280	87	77	
	9.00	0.03	0.1732	0.03	5	1.0	0.095	196	203	75	280	89	78	
	12.82	0.06	0.2449	0.06	5	2.5	0.140	196	203	76	280	95	82	
	23.18	0.15	0.3873	0.16	5	3.8	0.212	196	200	78	280	98	83	
	27.00	0.18	0.4243	0.20	5	5.2	0.270	196	210	79	280	100	85	
	29.63	0.16	0.4000	0.18	5	5.0	0.250	196	210	78	280	102	86	
	31.75	0.16	0.4000	0.18	5	5.0	0.240	196	210	78	280	104	88	
	33.59	0.14	0.3742	0.16	5	5.0	0.220	196	211	78	280	105	89	
	35.00	0.14	0.3742	0.16	5	5.5	0.220	196	212	82	280	106	91	
	1.00	0.11	0.3317	0.11	5	7.5	0.200	194	211	96	287	98	94	
	2.41	0.11	0.3317	0.11	5	7.5	0.200	194	211	94	290	105	94	
	4.25	0.12	0.3464	0.12	5	8.0	0.210	194	228	95	290	105	94	
	6.37	0.16	0.4000	0.17	5	9.0	0.240	194	221	95	280	107	95	
	9.00	0.19	0.4359	0.20	5	10.0	0.260	194	218	95	280	110	96	stop
	12.82	0.18	0.4243		5									impinger
	23.18	0.16	0.4000		5									full of
	27.00	0.11	0.3317		5									water
	29.63	0.07	0.2646		5									
	31.75	0.05	0.2236		5									
	33.59	0.03	0.1732		5									
	35.00	0.02	0.1414		5									
AL			7.024	1.89		77		3322				1646	1449	
ERAGE			0.29267	0.11		4.5		195				91		

°F + 460 = Absolute Temperature Ts 655 Tm

SYMBOLS:

Vm	=	Standard cubic feet of gas metered
Vt	=	Metered cu. ft. of gas sampled, net meter reading
Y	=	Dry gas meter calibration factor
Pb	=	Barometric Pressure, ambient, inches Hg
ΔH	=	Average orifice pressure drop
Tm	=	Average gas meter temp., in and out, ^{o}R
Vw	=	Volume of water vapor, SCF, equivalent to Vc
Vc	=	Volume of water collected, mls
Bw	=	Volume ratio of water vapor to total gas sampled
Ms	=	Molecular weight of wet gas, lb./lb. mole
Vs	=	Stack gas velocity, feet/second
$\sqrt{\Delta P}$	=	Average $\sqrt{}$ of ΔP (Velocity pressure)
Ts	=	Average stack temperature, ^{o}R (^{o}F + 460)
Ps	=	Static pressure of stack gas, absolute inches Hg
A	=	Cross secitonal area of stack, square feet
An	=	Sample probe nozzle area, square feet
I	=	Isokinetic %
T	=	Total Sampling time, minutes

FORMULA	CALCULATION
$Vm = 17.64\ Vt\ Y\ \dfrac{Pb + \Delta H/13.6}{Tm}$	$17.64 \times 13.76 \times 0.954 \times \dfrac{30.15 + 0.11/13.6}{551} = 12.6741$
$Vw = 0.04707\ Vc$	$0.04707 \times 695.6 = 32.741892$
$Bw = \dfrac{Vw}{Vm + Vw}$	$\dfrac{32.741892}{12.6741 \times 32.741892} = 0.72093$
H_2O (Vol.) $= 100\ Bw$	$0.72093 \times 100 = 72.09\%$
$Ms = 29.0\ (1 - Bw) + 18.0\ (Bw)$	$29(1 - 0.72093) + 18(0.72093) = 21.06977$
$Vs = 72.67\ \sqrt{\Delta P}\ \sqrt{\dfrac{Ts}{Ps\ Ms}}$	$72.67 \times 0.29267 \times \dfrac{655}{30.15 \times 21.06977} = 21.596354$
$CFM = Vs\ (60)\ A$	$21.596354 \times 60 \times 7.07 = 9161$
$CFM = ACFM \times \dfrac{528}{Ts} \times \dfrac{Ps}{29.92}$	$9161 \times \dfrac{528}{655} \times \dfrac{30.15}{29.92} = 7442$
$SCFM = SCFM\ (1 - Bw)$	$7442 \times (1 - 0.72093) = 2077$
$A = (\text{diam. inches} \div 24)^2\ \pi$	$(0.313 \div 24)^2 \times 3.14159 = 0.00053433749$

$$= \frac{100\ Ts\ \{0.002669\ Vc + (Vm/Tm)\ (Pb + \Delta H/13.6)\}}{60\ T\ Vs\ Ps\ An}$$

$$= \frac{100 \times 655\ \{(0.002669 \times 695.6) + (12.6741/551)(30.15 + 0.11/13.6)\}}{60 \times 85 \times 21.596354 \times 30.15 \times 0.00053433749} \quad \frac{167041.54}{1744.4079} = 94.1\%$$

P UTANT EMISSION CALCULATIONS

PARTICULATE MATTER:

Filter plus Particulate	68.6753	Beaker + Particulate	106.0215
Filter Tare	68.6752	Beaker Tare	105.9830
Grams Particulate	0.0001		0.0385

Total grams x 1000 = mg Particulate 0.0386 x 1000 = 38.6

OTHER POLLUTANTS:

POLLUTANT	Probe Washings +First Two Impingers NH_3	Last Impinger NH_3
(C) Tested concentration, mg/liter	93.26	37.44
(Vi) Initial sample solution volume, liters (mls ÷ 1000)	2.0	1.0
(Va) Aliquot taken, mls	-	-
(V_f) Volume diluted to, mls	-	-
Total mg Pollutant, C (Vi) $\frac{V_f}{Va}$	186.52	37.44

Total NH_3 223.96 mg

EMISSION RATE:

AMMONIA

mg/DSCF = mg/Vm

$\frac{223.96}{12.6741}$ = 17.67 mg/DSCF

lbs./hour = $\frac{mg}{Vm}\left(\frac{60}{453600}\right)$ (DSCFM)

17.67 x $\frac{60}{453600}$ x 2077 = 4.85 lbs./hr.

grains/DSCF = 0.0154 x mg/DSCF

$\frac{4.85}{22}$ = 0.22 lbs. NH_3/ ton product

PARTICULATE EMISSION:

$\frac{38.6}{12.6741}$ = 3.0456 mg/DSCF

3.0456 x $\frac{60}{453600}$ x 2077 = 0.837 lbs./hr.

3.0455811 x 0.0154 = 0.0469 grains/DSCF

OCCIDENTAL CHEMICAL COMPANY - LATHROP

LABORATORY REPORT

4 Pages

TITLE: AMMONIUM SULFATE PLANT STACK TEST

DATE: July 29, 1981

BY: R. L. Percival

Corrected July 23 Report

The ammonium sulfate plant stack was tested for ammonia and particulate emissions. Field data and calculations are attached and the data summarized below.

Date Tested:	7-21-81
Time Tested:	10:30 am to 12:50 pm
Air Discharge:	6068 DSCFM
Ammonia (NH_3) emissions:	0.050 lbs./ton product
Particulate Emissions:	0.036 grains/DSCF
Production Rate TPD:	586

RECEIVED
JUL 30 1981
ENVIRONMENT HEALTH
& SAFETY DEPT.

DISTRIBUTION:

W. Beyett	W. Hunt	G. Reid
R. Edson	D. Kirk	FILE
L. Hemman	L. Riley	

FORM L-8

STACK SAMPLING FIELD DATA
RAC STAKSAMPLR

STACK: AMMONIUM SULFATE PLANT

DATE: July 21, 1981 TIME: 10:30 am to 12:50 p

PROCESS DATA: 2 saturators running
Production rate: 24.4 TPH A.S.
Cooling tower water 144° F (Fan off) 146° F mid-test

SAMPLING PERSONNEL: R. Percival, K. Stetler, W. Beyett

AMBIENT TEMPERATURE °F: 83

BAROMETRIC PRESSURE (P_B): 28.9" Hg

STARTING C FACTOR: 1.17

STACK DIAMETER: 36 STACK AREA (A): 7.07 FT.^{2}

STACK GAS PRESSURE (P_S): 28.9 INCHES HG.

NOZZLE DIAMETER (D): .313 INCHES

STACK GAS: WET BULB °F: 136 DRY BULB °F: 137

DEW POINT °F: 136 VOL. % H_2O: 17.7

GAS METER READING: TEST END 1018.41
TEST START 950.53
CUBIC FEET METERED (V_T) 67.88
METER TARE WEIGHT, GRAMS 67.9627

IMPINGER VOLUME: TEST END 442
TEST START 200
MLS. CONDENSED 242
TOTAL H_2O COLLECTED (V_C) 267

SILICA GEL WEIGHT: ENDING 689.3
STARTING 663.9
GAIN (GMS) 25.4

POINT NO.	INCHES FROM PORT	ΔP	√ΔP	ΔH ORIFICE	SAMPLE TIME, MIN.	VACUUM IN. HG.	METER CFM	TEMPERATURES °F STACK	PROBE	IMPINGER	FILTER	METER	METER	NOT
1.	1.00	0.01	0.10	0.15	5	0.5	-	-	est.250	-	-	77	75	
2.	2.41	0.01	0.10	0.15	5	0.5	0.24	-	-	-	-	80	75	
3.	4.25	0.01	0.10	0.15	5	0.5	0.23	-	-	80	274	87	76	
4.	6.37	0.01	0.10	0.15	5	0.5	0.24	-	-	84	108	92	78	
5.	9.00	0.01	0.10	0.15	5	0.5	0.24	-	-	85	103	100	80	
6.	12.82	0.04	0.20	0.46	5	1.8	0.36	-	-	83	97	102	96	
7.	23.18	0.04	0.20	0.46	5	1.8	0.38	-	-	79	98	102	87	
8.	27.00	0.09	0.30	0.93	5	2.5	0.54	-	-	77	107	110	89	
9.	29.63	0.13	0.36	1.50	5	3.6	0.68	-	-	71	94	116	91	
0.	31.75	0.25	0.50	2.90	5	5.5	0.90	-	-	69	110	129	94	
1.	33.59	0.26	0.51	3.00	5	6.0	0.92	-	-	69	96	127	96	
2.	35.00	0.39	0.62	4.40	5	9.5	1.14	-	-	73	-	132	98	
1.	1.00	0.03	0.17	0.35	5	1.8	0.34	-	-	101	-	100	118	
2.	2.41	0.03	0.17	0.35	5	1.8	0.34	-	-	98	260	104	97	
3.	4.23	0.04	0.20	0.47	5	2.0	0.38	-	-	96	257	111	97	
4.	6.37	0.12	0.35	1.17	5	3.0	0.58	-	-	91	267	119	98	
5.	9.00	0.09	0.30	1.05	5	3.0	0.50	-	-	86	266	121	100	
6.	12.82	0.08	0.28	0.92	5	2.8	0.54	-	-	88	266	122	101	
7.	23.18	0.18	0.42	2.20	5	5.0	0.80	-	-	89	254	125	106	
8.	27.00	0.27	0.52	3.00	5	6.2	0.94	-	-	88	248	132	103	
9.	29.63	0.29	0.54	3.30	5	6.5	0.96	-	-	97	261	137	105	
0.	31.75	0.28	0.53	3.10	5	6.7	0.98	-	-	103	249	139	107	
1.	33.59	0.26	0.51	2.90	5	6.2	0.94	-	-	109	261	141	108	
2.	35.00	0.27	0.52	3.00	5	6.4	0.92	-	-	110	250	143	117	
TOTAL			7.70	36.21		84.6						2748	2282	
AVERAGE			0.32	1.51		3.5		137				115	95	

°F + 460 = Absolute Temperature Ts 597 Tm 565

SYMBOLS:

Vm	=	standard cubic feet of gas metered
Vt	=	metered cu. ft. of gas sampled net meter reading
Y	=	Dry gas meter calibration factor
Pb	=	Barometric Pressure, ambient, inches Hg
ΔH	=	Average orifice pressure drop
Tm	=	Average gas meter temp., in and out, ^{o}R
Vw	=	Volume of water vapor, SCF, equivalent to Vc
Vc	=	Volume of water collected, mls
Bw	=	Volume ratio of water vapor to total gas sampled
Ms	=	Molecular weight of wet gas, lb./lb. mole
Vs	=	Stack gas velocity, feet/second
$\sqrt{\Delta P}$	=	Average $\sqrt{\ }$ of ΔP (Velocity pressure)
Ts	=	Average stack temperature, ^{o}R (^{o}F + 460)
Ps	=	Static pressure of stack gas, absolute inches Hg
A	=	Cross secitonal area of stack, square feet
An	=	Sample probe nozzle area, square feet
I	=	Isokinetic %
T	=	Total Sampling time, minutes

FORMULA	CALCULATION
$Vm = 17.64\ Vt\ Y \dfrac{Pb + \Delta H/13.6}{Tm}$	$17.64(67.88)(.954)\dfrac{28.9 + (1.51/13.6)}{565} = 58.65$ SCF
$Vw = 0.04707\ Vc$	$0.04707\ (267) = 12.57$ SCF
$Bw = \dfrac{Vw}{Vm + Vw}$	$\dfrac{(12.57)}{58.65 + (12.57)} = 0.176$
% H_2O (Vol.) = 100 Bw	100 (0.176) = 17.6
$Ms = 29.0\ (1 - Bw) + 18.0\ (Bw)$	$29.0\ (1-.176) + 18.0(.176) = 27.06$
$Vs = 72.67\ \sqrt{\Delta P}\ \sqrt{\dfrac{Ts}{Ps\ Ms}}$	$72.67(0.32)\ \sqrt{\dfrac{597}{28.9(27.06)}} = 20.32$
$CFM = Vs\ (60)\ A$	$(20.32)(60)(7.07) = 8620$
$CFM = ACFM \times \dfrac{528}{Ts} \times \dfrac{Ps}{29.92}$	$(8620)\left(\dfrac{528}{597}\right)\left(\dfrac{28.90}{29.92}\right) = 7364$
$SCFM = SCFM\ (1 - Bw)$	$(7364)(1 - 0.176) = 6068$
$An = (\text{diam. inches} \div 24)^2\ \pi$	$\left(\dfrac{313}{24}\right)^2\ \dfrac{22}{7} = .00053$
$= \dfrac{100\ Ts\ \{0.002669\ Vc + (Vm/Tm)\ (Pb + \Delta H/13.6)\}}{60\ T\ Vs\ Ps\ An}$	
$= \dfrac{100(597)\ \{0.002669(267) + \left(\dfrac{58.67}{565}\right)\left(28.9 + \dfrac{1.51}{13.60}\right)\}}{60(120)(20.32)(28.9)(.00053)}$	$= 99.2$

.LUTANT EMISSION CALCULATIONS

PARTICULATE MATTER:

Filter plus Particulate	68.1040	Beaker + Particulate	143.7600
Filter Tare	67.9627	Beaker Tare	143.7510
Grams Particulate	.1313		.0090

Total grams x 1000 = mg Particulate 1000 x .1403 = 140.3

OTHER POLLUTANTS:

POLLUTANT	SOLUBLE NH_3	INSOLUBL NH_3
(C) Tested concentration, mg/liter	86.5	17.6
(Vi) Initial sample solution volume, liters (mls ÷ 1000)	1.0	0.1
(Va) Aliquot taken, mls	-	-
(V_f) Volume diluted to, mls	-	-
Total mg Pollutant, C (Vi) $\frac{V_f}{Va}$	86.5	1.8

EMISSION RATE:

mg/DSCF = mg/Vm

lbs./hour = $\frac{mg}{Vm}\left(\frac{60}{453600}\right)$ (DSCFM)

grains/DSCF = 0.0154 x mg/DSCF

Ammonia (NH_3)

$\frac{88.3}{58.65}$ = 1.51 mg/DSCF

$\frac{1.51\ (60)\ 6068}{453600}$ = 1.21 lbs./hr.

(1.51) 0.0154 = .023 grains/DSCF

$\frac{1.21}{24.4}$ = 0.050 lbs./ton product

Particulates

$\frac{140.3}{58.65}$ = 2.39 mg/DSCF

$\frac{2.39\ (60)\ 6068}{453600}$ = 1.92 lbs./hr.

2.39(0.0154) = 0.037 grains/DSCF

Simplot

MINERALS & CHEMICAL DIVISION
WESTERN REGION

LABORATORY REPORT

5 pages

DISTRIBUTION: R. Edson	DATE: May 10, 1983
	BY: M. Neckels

SUBJECT: AMMONIUM SULFATE PLANT STACK TEST

The ammonium sulfate plant stack was tested for sulfur dioxide and particulate emissions. These tests were done using E.P.A. method 5 modified according to E.P.A. method 6 to include sulfur dioxide. Field data and calculations are attached and the data summarized below.

DATE TESTED	5-6-83
TIME TESTED	9:15 am to 11:40 am
SAMPLING PERSONNEL	J. Washington & M. Neckels
AIR DISCHARGE, DSCFM	5368
SULFUR DIOXIDE (SO_2) EMISSIONS	30.3 lbs./day
FEED SO_2 (10 gpm, 238 ppm SO_2)	31.0 lbs./day
PARTICULATE EMISSIONS	0.03 grains/DSCF 1.5 lbs./hr.
PRODUCTION RATE	498 tons/day

STACK SAMPLING FIELD DATA
RAC STAKSAMPLR

STACK Ammonium Sulfate Plant

DATE 1-6-83 TIME 9:15 am to 11:40 am

PROCESS DATA Production Rate: 1# 16 GPM H_2SO_4
#2 18 GPM H_2SO_4; 10 GPM Stauffer Sulfate Liquor to make-up

SAMPLING PERSONNEL J. Washington, M. Neckels

AMBIENT TEMPERATURE °F 62

BAROMETRIC PRESSURE (P_B) 30.08

STARTING C FACTOR 0.52

STACK DIAMETER 36" STACK AREA (A) 7.07 FT.^{2}

STACK GAS PRESSURE (P_S) 30.08 INCHES HG.

NOZZLE DIAMETER (D) 0.313 INCHES

STACK GAS: WET BULB °F 181 DRY BULB °F 181

DEW POINT °F 181.0 VOL. % H_2O 52.2

GAS METER READING: TEST END 63.572 TEST START 6.648

CUBIC FEET METERED (V_T) 56.924

FILTER TARE WEIGHT, GRAMS 68.3819

IMPINGER VOLUME: TEST END 1120 TEST START 200

MLS. CONDENSED 920

TOTAL H_2O COLLECTED (V_C) 1105.1

SILICA GEL WEIGHT: ENDING 866.6 STARTING 681.5

GAIN (GMS) 185.1

POINT NO.	INCHES FROM PORT	ΔP	√ΔP	ΔH ORIFICE	SAMPLE TIME, MIN.	VACUUM IN. HG.	METER CFM	TEMPERATURES °F STACK	PROBE	IMPINGER	FILTER	METER	METER	NOTES
1.	1.00	.08	0.28	0.34	5	7.0		184	230	49	168	80	69	
2.	2.41	.08	0.28	0.34	5	10.0		184	230	47	165	86	69	
3.	4.25	.18	0.42	0.76	5	22.0		182	230	46	169	92	76	
4.	6.37	.30	0.55	1.80	5	20.0		187	230	46	225	96	93	
5.	9.00	.48	0.69	2.00	5	22.0		180	230	56	230	100	82	
6.	12.82	.62	0.79	2.60	5	23.0		180	230	57	178	89	87	10 am
7.	23.18	.50	0.71	2.10	5	13.0		181	230	65	166	94	93	
8.	27.00	.24	0.49	1.00	5	5.5		180	230	64	156	101	75	
9.	29.63	.10	0.32	0.43	5	3.0		183	230	62	171	102	77	
10.	31.75	.04	0.20	0.17	5	2.0		184	230	58	189	96	82	
11.	33.59	.03	0.17	0.12	5	2.0		184	230	58	195	94	78	
12.	35.00	.03	0.17	0.12	5	2.0		184	230	57	174	91	91	
1.	1.00	.05	0.22	0.20	5	5.0		180	230	56	187	80	76	
2.	2.41	.06	0.24	0.25	5	5.0		180	230	53	170	83	75	
3.	4.25	.10	0.32	0.42	5	7.0		185	230	53	177	84	75	
4.	6.37	.22	0.47	0.90	5	7.5		185	230	49	176	89	74	
5.	9.00	.26	0.51	1.10	5	9.5		180	230	47	177	97	75	
6.	12.82	.33	0.57	1.50	5	12.0		180	230	49	178	103	77	
7.	23.18	.55	0.74	2.30	5	18.5		180	230	81	189	109	79	
8.	27.00	.58	0.76	2.80	5	16.0		180	230	60	178	113	81	
9.	29.63	.40	0.63	1.80	5	15.0		180	230	55	188	115	83	
10.	31.75	.24	0.49	1.00	5	9.0		180	230	56	186	113	84	
11.	33.59	.22	0.47	0.90	5	9.0		180	230	54	190	112	84	
12.	35.00	.30	0.55	1.30	5	10.5		180	230	51	193	111	84	
TOTAL			11.04	26.25		255.5		4363				2330	1919	
AVERAGE			0.46	1.09		10.65		181.8				89		
°F + 460 = Absolute Temperature							Ts	642			Tm	549		

POLLUTANT EMISSION CALCULATIONS

PARTICULATE MATTER:

Filter plus Particulate = 68.3819 Beaker + Particulate = 109.9607

Filter Tare = 68.3819 Beaker Tare = 109.8489

Grams Particulate = 111.8

Total grams x 1000 = mg Particulate = 111.8

Less mg H_2SO_4 Found in Particulate = -18.1 = 93.7 grams

Aliquot used for Particulate $\frac{1448 \text{ ml}}{1348 \text{ ml}}$ x 93.7 = 100.65 total grams Particulate

EMISSION RATE:

mg/DSCF = mg/Vm $\frac{100.65}{47.55} = 2.1167$

lbs./hour = mg/Vm $\left(\frac{60}{453600}\right)$ (DSCFM) $2.1167 \left(\frac{60}{453600}\right) 5367 = 1.503$

grains/DSCF = 0.0154 x mg/DSCF 0.0154 x 2.1167 = 0.0326

SULFUR DIOXIDE

Sample Titration mls Titer 0.10 N $BaCl_2$

Aliquot (57.5 mls) titer mls	1.25
Blank titer	0.20
Net mls titer	1.05

0.1 $BaCl_2$ = 0.0032g SO_2/ml

1.05 ml x 0.0032g/ml x $\frac{1448 \text{ mls}}{57.5 \text{ mls}}$ = 0.0846 sample grams SO_2

0.0846g x $\frac{5368 \text{ ft}^3/\text{min.}}{47.55 \text{ ft.}^2}$ = 9.5522g SO_2/min.

9.5522 x $\frac{1440 \text{ min./day}}{453.6 \text{ g/lb.}}$ = 30.3 lbs./day

Feed Rate: 10 gpm of 238 ppm SO_2 Stauffer Liquor

Net Rate: Feed 3.5 hrs., flush 0.5 hrs./each 4 hrs. = 21 hrs./day

10 gpm x 10.35 lb./gal. x $\frac{238 \text{ ppm}}{10^6}$ = 0.0246 lbs./min.

0.0246 lbs./min. x 1260 min./day = 31.0 lbs./day

SYMBOLS:

- Vm = Standard cubic feet of gas metered
- Vt = Metered cu. ft. of gas sampled, net meter reading
- Y = Dry gas meter calibration factor
- Pb = Barometric Pressure, ambient, inches Hg
- ΔH = Average orifice pressure drop
- Tm = Average gas meter temp., in and out, °R
- Vw = Volume of water vapor, SCF, equivalent to Vc
- Vc = Volume of water collected, mls
- Bw = Volume ratio of water vapor to total gas sampled
- Ms = Molecular weight of wet gas, lb./lb. mole
- Vs = Stack gas velocity, feet/second
- $\sqrt{\Delta P}$ = Average $\sqrt{\ }$ of ΔP (Velocity pressure)
- Ts = Average stack temperature, °R (°F + 460)
- Ps = Static pressure of stack gas, absolute inches Hg
- A = Cross secitonal area of stack, square feet
- An = Sample probe nozzle area, square feet
- I = Isokinetic %
- T = Total Sampling time, minutes

FORMULA	CALCULATION
$Vm = 17.64\ Vt\ Y \dfrac{Pb + \Delta H/13.6}{Tm}$	$17.64 \times 56.924 \times 0.862 \times \dfrac{30.08 + 0.08}{549} = 47.55$
$Vw = 0.04707\ Vc$	$0.04707 \times 1105.1 = 52.02$
$Bw = \dfrac{Vw}{Vm + Vw}$	$\dfrac{52.02}{47.55 + 52.02} = 0.522$
$\%\ H_2O\ (Vol.) = 100\ Bw$	$100 \times 0.522 = 52.2$
$Ms = 29.0\ (1 - Bw) + 18.0\ (Bw)$	$(29 \times 0.478) + (18 \times 0.522) = 23.26$
$Vs = 72.67 \sqrt{\Delta P} \sqrt{\dfrac{Ts}{Ps\ Ms}}$	$72.67 \times 0.46 \times \sqrt{\dfrac{642}{30.08 \times 23.25}} = 32.02$
$ACFM = Vs\ (60)\ A$	$32.03 \times 60 \times 7.07 = 13{,}583$
$SCFM = ACFM \times \dfrac{528}{Ts} \times \dfrac{Ps}{29.92}$	$13{,}587 \times \dfrac{528}{642} \times \dfrac{30.08}{29.92} = 11{,}231$
$DSCFM = SCFM\ (1 - Bw)$	$11{,}231 \times 0.478 = 5{,}368$
$An = (\text{diam. inches} \div 24)^2\ \pi$	$(0.313 \div 24)^2 \times \pi = 5.326 \times 10^{-4}$

$$I = \frac{100\ Ts\ \{0.002669\ Vc + (Vm/Tm)\ (Pb + \Delta H/13.6)\}}{60\ T\ Vs\ Ps\ An}$$

$$I = \frac{100 \times 642 \times \{(0.002669 \times 1105.1) + \left(\frac{47.42}{549}\right) \times (30.16)\}}{60 \times 120 \times 32.03 \times 30.08 \times \cancel{0.00034}} = 96.5\%$$

5.326×10^{-4}

FORM 2

METER BOX CALIBRATION AND CALCULATION FORM

DATE 5-2,3-83 CALIBRATED BY J. Washington

Barometric Pressure (Pb) inches Hg 30.35

Orifice ΔH Setting Inches H_2O	Gas Volume ft^3 Wet Test Meter V_1	Gas Volume ft^3 Dry Gas Meter V_2	Wet Test Meter T_1	Temperatures °F Dry Gas Meter inlet Ti	Temperatures °F Dry Gas Meter outlet To	Temperatures °F Dry Gas Meter avg. T_2	Time Min. Ø	γ	ΔH@ Inches H_2O
0.5	5	7.0	72°	109	92	100.5	17.42	0.75	3.2
1.0	5	6.0	70.5°	89	70	79.5	11.42	0.85	2.8
1.5	10	11.8	70°	108	86	97.0	18.75	0.89	2.8
2.0	10	11.8	69°	116	94	105.0	16.00	0.90	2.6
3.0	10	11.9	68.5°	122	94	108.0	13.75	0.90	2.9
4.0	10	12.0	68.0°	125	97	111.0	11.82	0.89	2.8
							Averages	0.863	2.9

Calculate each γ by =

$$\gamma = \frac{V_1 \; Pb \; (T_2 + 460)}{V_2 \left(Pb + \frac{\Delta H}{13.6}\right) (T_1 + 460)}$$

Calculate each ΔH@ by =

$$\Delta H@ = \frac{0.0317 \; \Delta H}{Pb \; (T_2 + 460)} \left[\frac{(T_1 + 460) \; Ø}{V_1} \right]^2$$

OCCIDENTAL CHEMICAL COMPANY - LATHROP

LABORATORY REPORT

5 Pages

TITLE: AMMONIUM SULFATE PLANT STACK TEST

DATE: August 6, 1980

BY: D. McCready

The Ammonium Sulfate Plant stack was tested for ammonia (NH_3) and particulate emission. Field data and calculations are attached, and the data summarized below.

Date Tested:	8-5-80
Time Tested:	1:00 pm - 3:00 pm
Air Discharge:	7687 DSCFM
Ammonia (NH_3) Emission:	0.024 lbs./ton product
Particulate Emission:	0.138 grains/DSCF (1)
Production Rate, TPD $(NH_4)_2SO_4$:	252, Based on H_2SO_4 feed (2)

will double with 2 saturators running
See 7/21/81 ST.

(1) Particulate contained P_2O_5 equivalent to @ 0.05 lbs./ton product.
Condensate water from stack contained 26 ppm P_2O_5.
Scrubber water contained 77 ppm P_2O_5.

(2) Only one saturator running.

DISTRIBUTION:

R. Edson
W. Beyett
G. Reid
D. Kirk
L. Hemman
W. Hunt

FORM L-8

STACK SAMPLING FIELD DATA
RAC STAKSAMPLER

ACK Ammonium Sulfate Plant
OCESS DATA 1 saturator running,
Production rate: 252 TPD A.S.

DATE 8-5-80 TIME 1:00 - 3:00 pm
SAMPLING PERSONNEL D. McCready, R. Percival, L. Riley
AMBIENT TEMPERATURE °F 85
BAROMETRIC PRESSURE (P_B) 29.84
STARTING C FACTOR 1.2
NOZZLE DIAMETER (d) 0.125 inches

ACK DIAMETER 16" STACK AREA (A) 1.4 ft.^{2}
ACK GAS PRESSURE (P_s) 29.84 inches Hg
ACK GAS: WET BULB °F 93 DRY BULB °F 93 DEW POINT °F 93 VOL. % H_2O 5.2

S METER READING: TEST END 595.84
TEST START 564.57
CUBIC FEET METERED (Vt) 31.27
LTER TARE WEIGHT, GRAMS 67.4032

IMPINGER VOLUME: TEST END 324.20
TEST START 300.00
mls CONDENSED 24.20
TOTAL H_2O COLLECTED (V_c) 37.70

SILICA GEL WEIGHT: ENDING 690.70
STARTING 677.20
GAIN (gms) 13.50

IN.	INCHES FROM PORT	ΔP	√ΔP	ΔH ORIFICE	SAMPLE TIME, MIN.	VACUUM IN. Hg	METER CFM	TEMPERATURES °F STACK	PROBE	IMPINGER	FILTER	METER	METER	NOTES
.	1.0	2.1	1.45	0.62	5	3.0	0.43	87	190	92	238	84	82	
.	2.3	3.1	1.76	0.90	5	4.0	0.53	85	247	84	241	104	84	
.	4.7	3.4	1.84	0.98	5	4.0	0.55	86	251	84	227	111	90	
.	11.3	3.8	1.95	1.05	5	4.0	0.57	86	248	85	227	112	92	(581.58)
.	13.7	4.8	2.19	1.40	5	4.8	0.66	85	245	89	241	114	93	-
.	15.0	4.8	2.19	1.35	5	4.8	0.65	88	253	96	251	123	96	
.														
.														
.														
.														
.														
.														
.	1.0	2.2	1.48	0.64	5	3.0	0.44	90	129	89	247	117	100	
.	2.3	2.3	1.52	0.68	5	3.0	0.46	89	100	86	258	118	102	
.	4.7	2.5	1.58	0.71	5	3.2	0.48	89	109	84	242	122	105	
.	11.3	2.5	1.58	0.71	5	3.2	0.48	90	115	86	250	125	104	(595.84)
.	13.7	2.5	1.58	0.71	5	3.3	0.48	90	136	85	244	125	105	
.	15.0	2.2	1.48	0.64	5	3.3	0.45	91	193	83	252	127	107	
7.														
8.														
9.														
0.														
1.														
2.														
OTAL			20.60	10.39	60	43.6		1056				1384	1160	
VERAGE			1.72	0.866		3.63		88				106		

°F + 460 = Absolute Temperature Ts 548 Tm 566

STACK SAMPLING CALCULATIONS

SYMBOLS:

Vm	=	Standard cubic feet of gas metered
Vt	=	Metered cu. ft. of gas sampled, net meter reading
Y	=	Dry gas meter calibration factor
Pb	=	Barometric Pressure, ambient, inches Hg
ΔH	=	Average orifice pressure drop
Tm	=	Average gas meter temp., in and out, ^{o}R
Vw	=	Volume of water vapor, SCF, equivalent to Vc
Vc	=	Volume of water collected, mls
Bw	=	Volume ratio of water vapor to total gas sampled
Ms	=	Molecular weight of wet gas, lb./lb. mole
Vs	=	Stack gas velocity, feet/second
$\sqrt{\Delta P}$	=	Average $\sqrt{\ }$ of ΔP (Velocity pressure)
Ts	=	Average stack temperature, ^{o}R (^{o}F + 460)
Ps	=	Static pressure of stack gas, absolute inches Hg
A	=	Cross secitonal area of stack, square feet
An	=	Sample probe nozzle area, square feet
I	=	Isokinetic %
T	=	Total Sampling time, minutes

FORMULA	CALCULATION
$m = 17.64\ Vt\ Y \dfrac{Pb + \Delta H/13.6}{Tm}$	$\dfrac{17.64 \times 31.27 \times .954 \times (29.84 + 0.06)}{566} = 27.80$
$w = 0.04707\ Vc$	$0.0407 \times 37.70 = 1.53$
$w = \dfrac{Vw}{Vm + Vw}$	$\dfrac{1.53}{27.80 + 1.53} = 0.052$
H_2O (Vol.) $= 100\ Bw$	$0.052 \times 100 = 5.2$
$s = 29.0\ (1 - Bw) + 18.0\ (Bw)$	$29.0 \times (0.948) + (18 \times 0.052) = 28.43$
$s = 72.67\ \sqrt{\Delta P}\ \sqrt{\dfrac{Ts}{Ps\ Ms}}$	$72.67 \times 1.72 \times \sqrt{\dfrac{548}{29.84 \times 28.43}} = 100.46$
$CFM = Vs\ (60)\ A$	$100.46 \times 60 \times 1.4 = 8{,}439$
$CFM = ACFM \times \dfrac{528}{Ts} \times \dfrac{Ps}{29.92}$	$\dfrac{8{,}439 \times 528 \times 29.84}{548 \times 29.92} = 8{,}109$
$SCFM = SCFM\ (1 - Bw)$	$8{,}109 \times 0.948 = 7687$
$n = (\text{diam. inches} \div 24)^2\ \pi$	8.522×10^{-5}
$= \dfrac{100\ Ts\ \{0.002669\ Vc + (Vm/Tm)\ (Pb + \Delta H/13.6)\}}{60\ T\ Vs\ Ps\ An}$	$\dfrac{100 \times 548\ [(0.101) + (0.049 \times (29.84 + 0.064)]}{60 \times 60 \times 100.46 \times 29.84 \times (8.522 \times 10^{-5})}$
$= 93.4$	

POLLUTANT EMISSION CALCULATIONS

PARTICULATE MATTER:

Filter plus Particulate	67.4736	Beaker + Particulate	137.2995
Filter Tare	67.4032	Beaker Tare	137.1205
Grams Particulate	0.0704		0.1790

Total grams x 1000 = mg Particulate

$$0.0704 \times 1000 = 70.4$$
$$0.1790 \times 1000 = 179.0$$
$$\text{TOTAL} \quad 249.4 \text{ mg}$$

OTHER POLLUTANTS:

POLLUTANT	SOLUBLE NH_3	INSOLUBLE NH_3
(C) Tested concentration, mg/liter	2.82	20.72
(Vi) Initial sample solution volume, liters (mls ÷ 1000)	1.0	0.20
(Va) Aliquot taken, mls	0	0
(V_f) Volume diluted to, mls	0	0
Total mg Pollutant, C (Vi) $\frac{V_f}{Va}$	2.82	4.144

EMISSION RATE:

mg/DSCF = mg/Vm

lbs./hour = $\frac{mg}{Vm}\left(\frac{60}{453600}\right)$ (DSCFM)

grains/DSCF = 0.0154 x mg/DSCF

Ammonia (NH_3)

6.964/27.80 = 0.251 mg/DSCF

$\frac{0.251 \times 60 \times 7687}{453600}$ = 0.255 lbs./hr.

0.0154 x 0.251 = 0.0039

$\frac{0.255 \times 24}{252}$ = 0.024 lbs./ton product

PARTICULATE

$\frac{249.4}{27.80}$ = 8.97 mg/DSCF

X $\frac{60\ (7687)}{453600}$ = 9.12 lbs./hr.

X 0.0154 = 0.138 grains/DSCF

Simplot

MINERALS & CHEMICAL DIVISION
WESTERN REGION

RECEIVED
DEC 24 1984
SAN JOAQUIN LOCAL
HEALTH DISTRICT

LABORATORY REPORT

6 Pages

DISTRIBUTION: R. Edson	DATE: 12/06/84
	BY: W. Beyett WGB

SUBJECT: AMMONIUM SULFATE PLANT STACK TEST FOR PARTICULATE, AMMONIA, & SULFUR DIOXIDE

The ammonium sulfate plant stack was tested for particulate matter, ammonia, and sulfur dioxide using E.P.A Method 5, modified by adding impingers and test procedures for the NH_3 and SO_2. The test procedures used were E-1, E-2, E-3A, E-3B, E-3C, E-3D, E-4C, E-4D, E-6, and E-11. Field and laboratory data and calculations are attached, and the results are summarized below.

Date & Time Tested	12/04/84 11:00 a.m. to 2:40 p.m.
Sampling Personnel	K. Stetler and assistant, analyses and calculations by W. Beyett
Production Rate	17 GPM H_2SO_4 = 249 tons/day of Ammonium Sulfate product. Unit #2 only operating.
SO_2 Feed Rate	10 GPM of liquor at 144 ppm SO_2 - equivalent to 20.7 pounds SO_2 per day.
Air Discharge Rate	10,325 DSCFM
Particulate Emission	0.03 grains/DSCF 2.62 lbs/hr
Ammonia Emission	0.19 lbs NH_3/hr
Sulfur Dioxide Emission	1.04 lbs SO_2/hr

FORM L-21 (1/83)

SULFUR DIOXIDE EMISSION

Standardization of Barium Chloride.

mls of 0.1 N BaCl solution per 25 mls 0.10 N H_2SO_4	=	22.8
less mls of blank titration		0.1
net mls BaCl solution / 25 mls of 0.10 N H_2SO_4		22.7

Normality of BaCl = 2.5/22.7 = 0.11 N, diluted to 10 to 100 = 0.011 N

Titration of Sample Solution.

Impingers #1 and #2, and their washings, were diluted to 200 mls each, and mixed. Aliquot of 100 mls was taken from each for SO_2 titration, and the remaining solution used for Ammonia determination.

2nd impinger 30.3 mls - 0.1 = 30.2 mls of 0.011 N BaCl solution

30.2 (0.011) 32 (200/100) = 21.26 mg SO_2

3rd impinger 6.1 mls - 0.1 = 6.0 mls of 0.011 N BaCl solution

6.0 (0.011) 32 (200/100) = 4.22 mg SO_2

Emission Calculation.

$$\text{mg } SO_2/\text{DSCF} = \frac{21.25 + 4.22}{33.30} = 0.765$$

$$\text{Lbs. } SO_2/\text{hour} = \frac{0.765\ (10{,}325)\ 60}{453600} = 1.04$$

STACK SAMPLING FIELD DATA
RAC STAKSAMPLR

STACK: AMMONIUM SULFATE PLANT

DATE: December 4, 1984 TIME: 11:00 a.m. to 12:00 noon, 1:40 p.m. to 2:40 p.m.

PROCESS DATA: 17 GPM H_2SO_4, 10 GPM Stauffer Sulfate Liquor at 144 ppm SO_2. Rate is 10.4 tons Ammonium Sulfate product per hour.

SAMPLING PERSONNEL: K. Stetler & W. Beyett

AMBIENT TEMPERATURE °F: 54 to 68°F

BAROMETRIC PRESSURE (P_B): 30.2

STARTING C FACTOR: 1.3

STACK DIAMETER: 36" STACK AREA (A): 7.07 FT.^{2}

STACK GAS PRESSURE (P_S): 30.2 INCHES HG.

NOZZLE DIAMETER (D): 0.188 INCHES

STACK GAS: WET BULB °F: 156 DRY BULB °F: 156

DEW POINT °F: 156 VOL. % H_2O: 28.8

GAS METER READING: TEST END 301.99 TEST START 264.00

CUBIC FEET METERED (V_T): 37.99

FILTER TARE WEIGHT, GRAMS: 68.6228

IMPINGER VOLUME: TEST END 360+134+119 TEST START 300 (1st 3 impingers)

MLS. CONDENSED: 313

TOTAL H_2O COLLECTED (V_C): 321 (including silica gel)

SILICA GEL WEIGHT: ENDING 769.4 STARTING 761.1 GAIN (gms) 8.3

POINT NO.	INCHES FROM PORT	ΔP	√ΔP	ΔH ORIFICE	SAMPLE TIME, MIN.	VACUUM IN. HG.	METER CFM	TEMPERATURES °F STACK	PROBE	IMPINGER	FILTER	METER	METER	NOTE
1.	1.0	0.29	0.54	0.23	5	1.5	0.26	156	189	thermo-	thermo-	56	-	Leak
2.	2.4	0.30	0.55	0.22	5	1.6	0.26	156	189	couple	couple	65	-	Test
3.	4.3	0.33	0.57	0.25	5	3.3	0.28	156	189	out of	out of	70	61	at
4.	6.4	0.38	0.62	0.29	5	3.7	0.30	156	189	order	order	69	61	start
5.	9.0	0.51	0.71	0.39	5	4.5	0.35	156	230			70	64	0.023
6.	12.8	0.62	0.79	0.52	5	5.6	0.39	156	212	temp	filter	71	63	CFM
7.	23.2	0.82	0.91	0.61	5	6.2	0.41	156	229	cold,	box	73	63	
8.	27.0	0.73	0.85	0.56	5	5.9	0.41	156	220	ice	always	76	66	
9.	29.6	0.59	0.77	0.45	5	4.8	0.36	156	220	bath	plus	75	64	
10.	31.8	0.48	0.69	0.37	5	4.4	0.33	156	230	always	220°F	75	65	
11.	33.6	0.42	0.65	0.33	5	4.4	0.31	156	217	full		77	66	
12.	35.0	0.35	0.59	0.27	5	4.0	0.29	156	236			77	66	
1.	1.0	0.14	0.37	0.10	5	5.0	0.19	155	236			58	56	
2.	2.4	0.14	0.37	0.10	5	5.3	0.19	155	218			61	56	
3.	4.3	0.15	0.39	0.11	5	5.5	0.20	155	219			64	57	
4.	6.4	0.40	0.63	0.29	5	7.0	0.32	155	228			66	58	
5.	9.0	0.51	0.71	0.39	5	7.3	0.35	155	220			68	58	
6.	12.8	0.60	0.77	0.46	5	7.4	0.37	155	220			68	58	
7.	23.2	0.62	0.79	0.51	5	7.5	0.39	155	231			73	60	
8.	27.0	0.58	0.76	0.45	5	7.3	0.36	155	220			76	61	Leak
9.	29.6	0.48	0.69	0.37	5	6.7	0.34	155	230			78	62	Test
10.	31.8	0.42	0.65	0.32	5	6.2	0.32	155	221			79	62	at end
11.	33.6	0.36	0.60	0.28	5	6.1	0.31	155	231			77	64	0.011
12.	35.0	0.33	0.57	0.16	5	6.0	0.30	155	225			77	65	CFM
TOTAL		5.24	15.15	8.16	120	131.2		3732				1642	1358	
AVERAGE		.65	0.63	0.34		5.5		156					65	

°F + 460 = Absolute Temperature Ts 616 Tm 525

FORM 2

METER BOX CALIBRATION AND CALCULATION FORM

DATE 5-2,3-83 CALIBRATED BY J. Washington

Barometric Pressure (Pb) inches Hg 30.35

Orifice ΔH Setting Inches H_2O	Gas Volume ft^3 Wet Test Meter V_1	Gas Volume ft^3 Dry Gas Meter V_2	Wet Test Meter T_1	Temperatures °F Dry Gas Meter inlet Ti	Temperatures °F Dry Gas Meter outlet To	Temperatures °F Dry Gas Meter avg. T_2	Time Min. Ø	γ	ΔH@ Inches H_2O
0.5	5	7.0	72°	109	92	100.5	17.42	0.75	3.2
1.0	5	6.0	70.5°	89	70	79.5	11.42	0.85	2.8
1.5	10	11.8	70°	108	86	97.0	18.75	0.89	2.8
2.0	10	11.8	69°	116	94	105.0	16.00	0.90	2.6
3.0	10	11.9	68.5°	122	94	108.0	13.75	0.90	2.9
4.0	10	12.0	68.0°	125	97	111.0	11.82	0.89	2.8
							Averages	0.863	2.9

Calculate each γ by =

$$\gamma = \frac{V_1 \; Pb \; (T_2 + 460)}{V_2 \; (Pb + \frac{\Delta H}{13.6}) \; (T_1 + 460)}$$

Calculate each ΔH@ by =

$$\Delta H@ = \frac{0.0317 \; \Delta H}{Pb \; (T_2 + 460)} \left[\frac{(T_1 + 460) \; Ø}{V_1} \right]^2$$

SYMBOLS:

Vm	=	Standard cubic feet of gas metered
Vt	=	Metered cu. ft. of gas sampled, net meter reading
Y	=	Dry gas meter calibration factor
Pb	=	Barometric Pressure, ambient, inches Hg
ΔH	=	Average orifice pressure drop
Tm	=	Average gas meter temp., in and out, ^{o}R
Vw	=	Volume of water vapor, SCF, equivalent to Vc
Vc	=	Volume of water collected, mls
Bw	=	Volume ratio of water vapor to total gas sampled
Ms	=	Molecular weight of wet gas, lb./lb. mole
Vs	=	Stack gas velocity, feet/second
$\sqrt{\Delta P}$	=	Average $\sqrt{\ }$ of ΔP (Velocity pressure)
Ts	=	Average stack temperature, ^{o}R (^{o}F + 460)
Ps	=	Static pressure of stack gas, absolute inches Hg
A	=	Cross sectional area of stack, square feet
An	=	Sample probe nozzle area, square feet
I	=	Isokinetic %
T	=	Total Sampling time, minutes

FORMULA | CALCULATION

$$Vm = 17.64\ Vt\ Y\ \frac{Pb + \Delta H/13.6}{Tm} = 17.64\ (37.99)\ 0.863\ \frac{30.20 + 0.34/13.6}{525} = 33.30$$

$$Vw = 0.04707\ Vc = 0.04707\ (321) = 15.11$$

$$Bw = \frac{Vw}{Vm + Vw} = \frac{15.11}{33.30 + 15.11} = 0.312$$

$$\%\ H_2O\ (Vol.) = 100\ Bw = 100\ (0.312) = 31.2\%$$

$$Ms = 29.0\ (1 - Bw) + 18.0\ (Bw) = 29\ (.688) + 18\ (.312) = 25.57$$

$$Vs = 72.67\ \sqrt{\Delta P}\ \sqrt{\frac{Ts}{Ps\ Ms}} = 72.67\ (0.63)\ \sqrt{\frac{616}{30.2\ (25.57)}} = \cancel{40.89}\ 37.68$$

$$ACFM = Vs\ (60)\ A = 40.89\ (60)\ 7.07 = 17{,}346$$

$$SCFM = ACFM \times \frac{528}{Ts} \times \frac{Ps}{29.92} = 17{,}346 \times \frac{528}{616} \times \frac{30.2}{29.92} = \cancel{15{,}007}\ 13\,835$$

$$DSCFM = SCFM\ (1 - Bw) = \cancel{15{,}007}\ (.688) = 10{,}325$$

$$An = (\text{diam. inches} \div 24)^2\ \pi = (0.188 \div 24)^2\ \pi = 1.928 \times 10^{-4}$$

$$I = \frac{100\ Ts\ \{0.002669\ Vc + (Vm/Tm)\ (Pb + \Delta H/13.6)\}}{60\ T\ Vs\ Ps\ An} = \frac{100\ (616)\ (0.857 + 1.917)}{60\ (120)\ (40.89)\ (30.2)\ 1.928 \times 10^{-4}}$$

$$I = 99.7\%$$

PARTICULATE MATTER:

Filter plus Particulate	68.6400	**Beaker + Particulate**	135.2868
Filter Tare	68.6228	**Beaker Tare**	135.2400
Grams Particulate	0.0172		0.0468
Total grams x 1000 = mg Particulate	64.0		

OTHER POLLUTANTS:

POLLUTANT	NH_3 Impinger 2	NH_3 Impinger 3
(C) Tested concentration, mg/liter	13.6	9.4
(Vi) Initial sample solution volume, liters (mls ÷ 1000)	0.2	0.2
(Va) Aliquot taken, mls	-	-
(V_f) Volume diluted to, mls	-	-
Total mg Pollutant, C (Vi) $\frac{V_f}{Va}$	2.72	1.88
	TOTAL = 4.60	

EMISSION RATE:

mg/DSCF = mg/Vm $(NH_3)\ \frac{4.60}{33.30} = 0.138$ mg/DSCF

lbs./hour = $\frac{mg}{Vm}\left(\frac{60}{453600}\right)$ (DSCFM) $0.138\ (1.3 \times 10^{-4})\ (10{,}325) - 0.19$ lbs/hr

grains/DSCF = 0.0154 x mg/DSCF

(particulate) $\frac{64.0}{33.3} = 1.922$ mg/DSCF

x 1.3657 = 2.62 lbs/hr 2.417 lb/hr

1.922 (0.0154) = 0.0296 grains/DSCF

(NH_3 in particulate) 53.3 mg/L (0.2 L) = 10.65 mg NH_3

A

EVALUATOR Steve Sharpe EVALUATION DATE 9/10/92

METHOD 5: SECONDARY EMISSIONS TEST REPORT EVALUATION

STATE: TX FACILITY: Occidental Chem. CO. Houston TX TEST DATE:

PROCESS(ES) TESTED: Ammonium Sulfate Dryer Exhaust

SAMPLING DURATION 3
must have at least 3 runs, each ≥ 1 hour duration, with sampling ≥ 2 minutes at each traverse point, and total sampling volume ≥ 30 dscf

PRODUCTION RATE 3
is process or production rate during testing representative of normal rates

0.213 lbs part/hr

Production: 14-18 tons granular ammonium sulfate/hr

CONTROL DEVICE(S) 2
are devices described, and their efficiencies given

Bag house, [redacted]

No effi given

METHOD 1 3
are calculations accurate, and is figure provided

METHODS 2,3 2
are data and calculations included for gas velocity, cyclonic flow, and molecular weight determination, and is source of barometric pressure noted

METHOD 4 3
are data and calculations included for moisture content determination, and is moisture content realistic [< saturation]

FIELD DATA is field data on standard forms, and does raw data correspond with printout 3

BOILER TESTS NA
calculation of F_0 from Orsat accurate

SAMPLING TEMPERATURE 3
both probe and filter must be maintained at 248 ± 25°F or other temperature specified in NSPS

BACK-HALF 3
if any, what method was used to catch and recover condensible matter

EQUIPMENT were a borosilicate glass probe liner and a quartz fiber filter used 3

CALIBRATION were both pre- and post-test calibrations performed for
meter box 3

pitot tube 3

temperature sensor 2
No Doc

nozzle (3 Φ) 2
No Doc

LEAK CHECKS both pre- and post-test 3

BLANKS were filter and reagent blanks analyzed, and were any problems addressed 2
No Doc

SAMPLE PREP 3
filter desiccation and tare weights documented

ISOKINETICS within 100±10% for all runs 3

6.18

United States
Environmental Protection
Agency

Office of Air Quality
Planning and Standards
Research Triangle Park NC 27711

EMB Report 78-NHF-2a
March 1979

Air

EPA

Ammonium Sulfate Emission Test Report Occidental Chemical Company Houston, Texas

SOURCE EMISSIONS TEST REPORT

OCCIDENTAL CHEMICAL COMPANY
Houston, Texas

AMMONIUM SULFATE DRYER BAGHOUSE EXHAUST STACK

Barry L. Jackson
Supervisor
Air Testing

Peter J. Marks
Department Manager
Laboratory Services

for: ROY F. WESTON

RFW W.O. #0300-81-04
Contract No. 68-02-2816
Work Assignment No. 3

Prepared by:

ROY F. WESTON
ENVIRONMENTAL CONSULTANTS-DESIGNERS
Weston Way
West Chester, Pennsylvania 19380
(215) 692-3030

TABLE OF CONTENTS

	PAGE
LIST OF TABLES AND FIGURES	i
SUMMARY	1
INTRODUCTION	2
DESCRIPTION OF PROCESS	4
DESCRIPTION OF TEST LOCATION	6
Ammonium Sulfate Dryer Baghouse Exhaust Stack	6
DESCRIPTION OF SAMPLING TRAIN	8
Particulate Sampling Train	8
TEST PROCEDURES	10
Preliminary Tests	10
Ammonium Sulfate Dryer Baghouse Exhaust Stack	10
ANALYTICAL PROCEDURES	12
Particulate Sample Recovery	12
Particulate Analyses	13
DISCUSSION OF TEST RESULTS	14
APPENDIX A - Raw Test Data	
APPENDIX B - Laboratory Reports	
APPENDIX C - Sample Calculations	
APPENDIX D - Equipment Calibration Data	
APPENDIX E - Detailed Baghouse Information	
APPENDIX F - Project Participants	

LIST OF TABLES AND FIGURES

TABLE NO.	TITLE	PAGE NO.
1	Ammonium Sulfate Dryer Exhaust Stack Summary of Test Data	15
2	Ammonium Sulfate Dryer Exhaust Stack Summary of Test Results	16

FIGURE NO.	TITLE	PAGE NO.
1	Ammonium Sulfate Dryer and Baghouse	5
2	Ammonium Sulfate Dryer Baghouse Exhaust Stack Port and Sampling Point Locations	7
3	Particulate Sampling Train EPA Method 5 Baghouse Exhaust Stack	9

SUMMARY

The Emission Measurement Branch of the U.S. Environmental Protection Agency contracted Roy F. Weston, Inc. to conduct a source testing and analysis program at Occidental Chemical Company's Houston, Texas Ammonium Sulfate Plant.

The primary objective of the testing program was to quantify the particulate emissions to the atmosphere from the Ammonium Sulfate Dryer Baghouse Stack. This objective was achieved by performing a series of three particulate tests utilizing EPA Method 5[1] procedures at the baghouse exhaust stack location. In addition, visual determinations of plume opacities were made simultaneously with each particulate test at the source discharge point according to EPA Method 9[2] protocol.

The particulate matter emission results are summarized below:

Ammonium Sulfate Dryer Baghouse

Test No.	Test Location	Particulate Grains/DSCF	Concentration Pounds/Hour
1	Exhaust Stack	0.016	0.16
2	Exhaust Stack	0.023	0.23
3	Exhaust Stack	0.026	0.25

No visible emissions were observed emanating from the baghouse exhaust stack during the test program by the certified observer.

Detailed summaries of test data and test results are presented in Tables 1 and 2 of this report, respectively.

(1) Code of Federal Regulations, Title 40, Part 60, Appendix A, "Standards of Performance for New Stationary Sources," August 18, 1977.

(2) Federal Register, Vol. 39, No. 219, November 12, 1974.

INTRODUCTION

The Emission Measurement Branch of the U.S. Environmental Protection Agency contracted Roy F. Weston, Inc. to conduct a source testing and analysis program at Occidental Chemical Company's Houston, Texas Ammonium Sulfate Plant. The objective of the testing program was to measure various emission parameters from Oxychem's Ammonium Sulfate Dryer Baghouse.

The location tested, plus the number and types of tests performed at the site are listed below:

1. Ammonium Sulfate Dryer Baghouse Exhaust Stack.
   a. Three one-hour particulate tests by EPA Method 5.
   b. Three opacity tests by EPA Method 9. Visual determinations of plume opacities were determined simultaneously with the particulate tests.

These tests were conducted on 26 October 1978 by Weston personnel. Tests performed previously at the exhaust stack indicated emissions greater than might be expected from a bag collector used in this application and were attributed to leaking bag(s).

The baghouse inlet duct location was not tested during this period since most of the internal area of the duct was filled with an irregular buildup of product solids (which prevented representative sampling) as shown below:

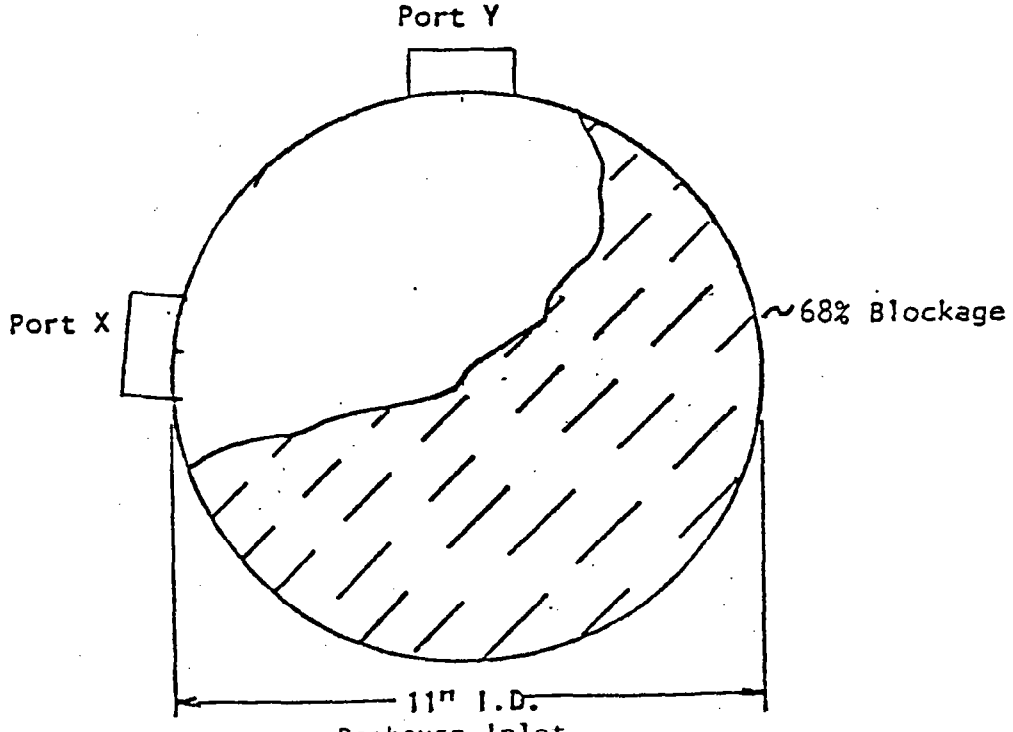

Baghouse Inlet
Duct Cross-Sectional View

A decision was made not to test the inlet duct since the entire unit would have been required to shut down to enable the duct to be cleaned.

Test data and test results of the outlet testing program are presented in Tables 1 and 2 of this report, respectively. Also, incorporated herein is a description of the test location, test equipment, test procedures, sample recovery, and analytical methods used during the test program. Raw test data, laboratory reports, sample calculations, equipment calibration data, baghouse details, and a list of project participants are provided in Appendices A through F, respectively.

DESCRIPTION OF PROCESS

Ammonium Sulfate Dryer

Anhydrous ammonia and sulfuric acid are combined to yield granular ammonium sulfate at a rate of 14 to 18 tons/hour. The heat of reaction causes the desired moisture loss in the dryer to produce the final product. The final product drops from the dryer and is then conveyed to storage. The moist hot air from the dryer, which contains ammonium sulfate fines, is drawn through a baghouse to effect additional product recovery while reducing particulate emissions.

A schematic diagram of the Ammonium Sulfate Dryer and Baghouse is presented in Figure 1.

OCCIDENTAL CHEMICAL COMPANY

Houston, Texas

FIGURE 1

AMMONIUM SULFATE DRYER AND BAGHOUSE

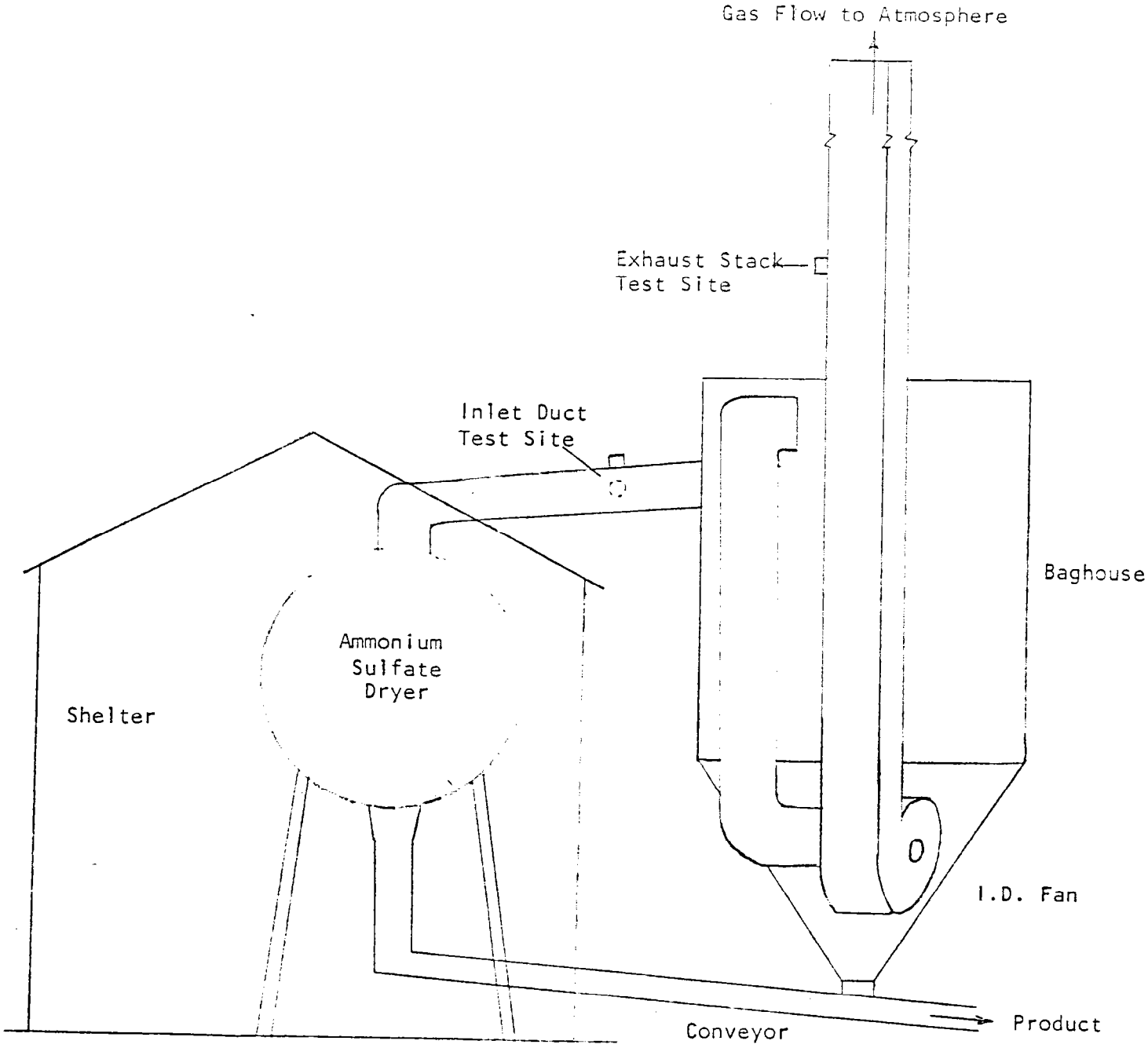

DESCRIPTION OF TEST LOCATION

Ammonium Sulfate Dryer Baghouse Exhause Stack

Two 3" I.D. test ports were placed on one side of the 7-1/2" x 8-5/8" rectangular exhaust stack serving the baghouse. The ports were located 15 diameters downstream and 10 diameters upstream from the nearest flow disturbances. Since the eight and two diameter criterion were met, a minimum of eight traverse points were required by EPA Method 1 regulations. Figure 2 illustrates duct geometry plus port and sampling point locations.

OCCIDENTAL CHEMICAL COMPANY

Houston, Texas

FIGURE 2

AMMONIUM SULFATE DRYER BAGHOUSE EXHAUST STACK

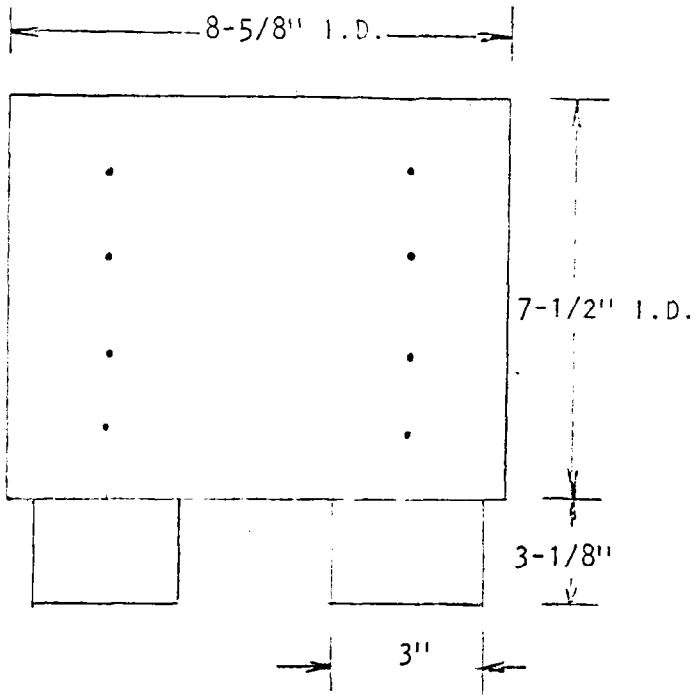

Duct Cross-Sectional View

Traverse Point Number	Distance From Inside Near Wall, Inches
1	1
2	2-3/4
3	4-5/8
4	6-1/2

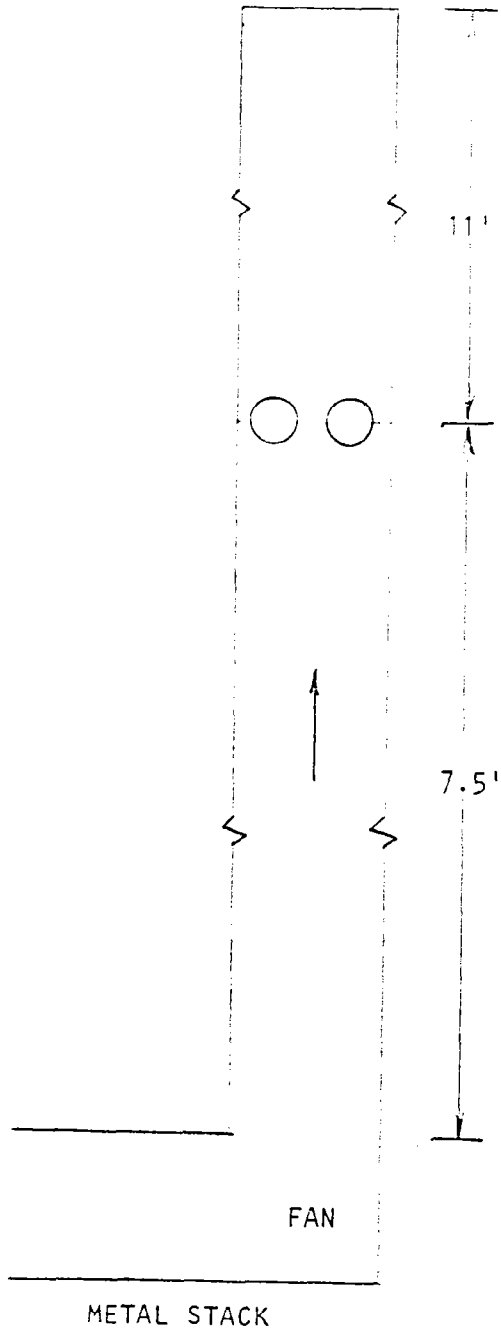

DESCRIPTION OF SAMPLING TRAIN

Particulate Sampling Train

The test train utilized for particulate sampling at the baghouse exhaust duct location was the standard EPA Method Five Train (see Figure 3).

A stainless steel nozzle was attached to a heated ($\sim$250°F) 3' borosilicate glass probe which was connected directly to a borosilicate filter holder containing a 4" Reeve Angel 900 AF glass fiber filter. The filter holder was maintained at approximately 250°F in a heated chamber, and was connected by a section of borosilicate tubing to the first of four Greenburg-Smith impingers which were included in the train to condense the moisture in the gas stream. Each of the first two impingers contained 100 ml of distilled water, the third was dry and the final impinger contained 200 grams of dry pre-weighed silica gel. The first, third, and fourth impingers were modified Greenburg-Smith type; the second was a standard Greenburg-Smith impinger. All impingers were maintained in a crushed ice bath. A RAC control console with vacuum pump, dry gas meter, a calibrated orifice, and inclined manometers completed the sampling train.

Flue gas temperature was measured by means of a Type K thermocouple which was connected to a direct readout pyrometer. The thermocouple sensor was positioned adjacent to the sampling nozzle.

Gas velocity was measured using a calibrated "S" type pitot tube provided with extensions and fastened alongside the sampling probe. Gas stream composition (carbon dioxide, oxygen, and carbon monoxide content) was determined utilizing Orsat apparatus to analyze stack gas samples. Gas stream composition proved to be ambient air since no combustion products were found in any of the stack gas effluent samples.

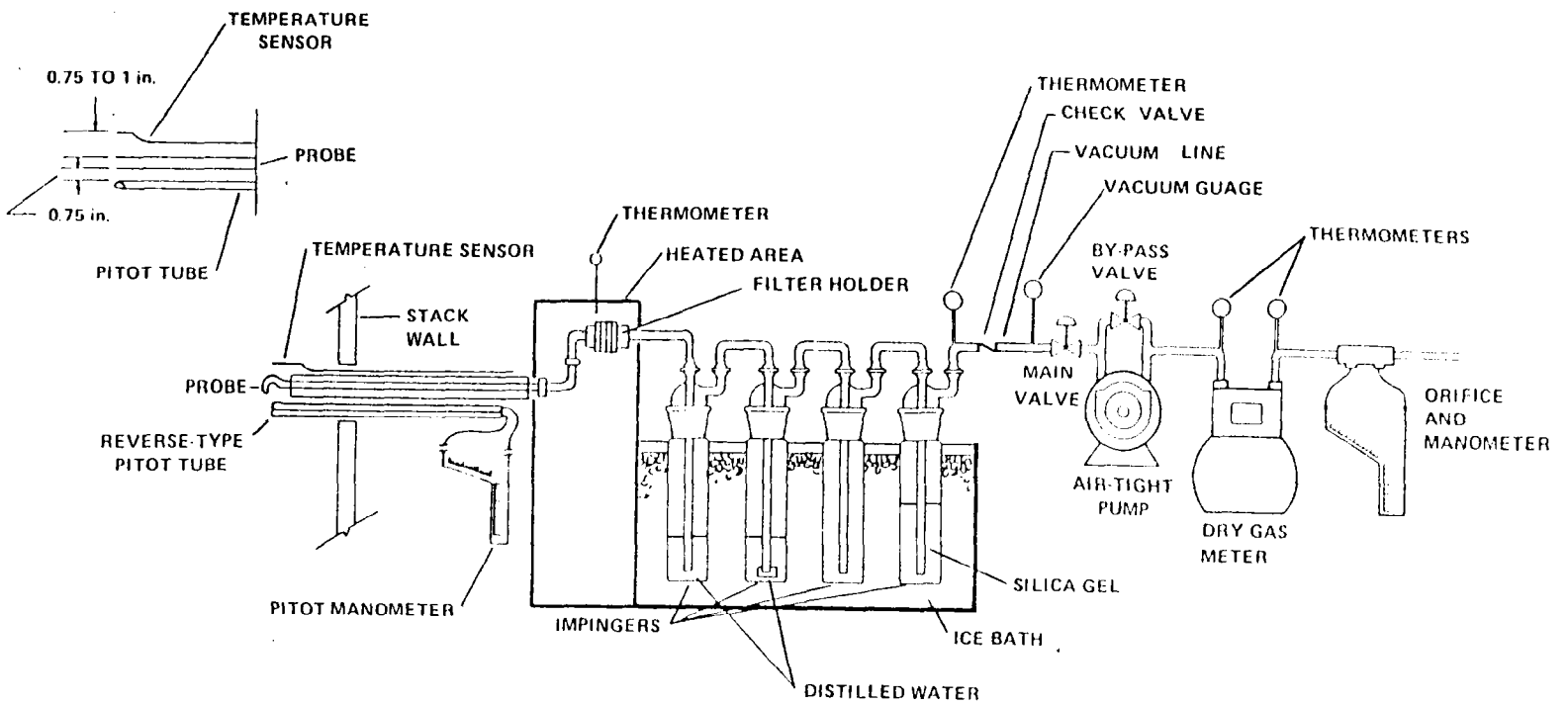

FIGURE 3 PARTICULATE SAMPLING TRAIN—EPA METHOD 5

BAGHOUSE EXHAUST STACK

Preliminary Tests

Preliminary test data was obtained at the sampling location. Stack geometry measurements were recorded and sampling point distances calculated. A preliminary velocity traverse was performed utilizing a calibrated "S" type pitot tube and a Dwyer inclined manometer to determine velocity profiles. Stack gas temperatures were observed with a direct read-out pyrometer equipped with a chromel-alumel thermocouple. Gas stream composition and moisture content values were estimated from previous stack testing reports.

Preliminary test data was used for nozzle sizing and nomagraph set-up for isokinetic sampling procedures.

Calibration of the probe nozzles, pitot tubes, metering systems, probe heaters, temperature gauges and barometer were performed as specified in Section 5 of EPA Method 5 test procedures (see Appendix E for calibration data).

Ammonium Sulfate Dryer Baghouse Exhaust Stack

A series of three EPA Method 5 tests were performed at the Ammonium Sulfate Dryer Baghouse exhaust stack. Twelve points were traversed, six per port axis for five minutes each yielding a test period 60 minutes in length.

During particulate sampling, gas stream velocities were measured by inserting a calibrated "S" type pitot tube into the stream adjacent to the sampling nozzle. The velocity pressure differential was observed immediately after positioning the nozzle at each point, and sampling rates were adjusted to maintain isokinetic sampling. Stack gas temperatures were also monitored at each point with the pyrometer and thermocouple. Additional temperature measurements were made at the final impinger and at the inlet and outlet of the dry gas meter.

Test data was recorded every five minutes during all test periods. Table 1 presents a summary of test data for each of the three runs. Test result summarization appears on Table 2.

Visible emissions observations were recorded concurrently with each particulate test repetition by a certified observer according to EPA Method 9 procedures. See Table 2 for result summary.

Particulate Sample Recovery

At the conclusion of each test, the sampling train was dismantled, openings sealed, and the components transported to the field laboratory. Sample integrity was assured by maintaining chain of custody records which will be supplied upon request.

A consistent procedure was employed for sample recovery:

- The glass fiber filter(s) was removed from its holder with tweezers and placed in its original container (petri dish), along with any loose particulate and filter fragments (Sample 1).

- The probe and nozzle were separated and the internal particulate rinsed with distilled water into a borosilicate container while brusting a minimum of three times until no visible particles remained. Particulate adhering to the brush was rinsed with distilled water into the same container. The front half of the filter holder was rinsed with distilled water while brushing a minimum of three times. The rinses were combined (Sample 2) and the container sealed with a Teflon lined closure.

- The total liquid in impingers one, two and three was measured, the value recorded, and the liquid discarded.

- The silica gel was removed from the last impinger and immediately weighed.

- A distilled water sample was retained for blank analysis.

Particulate Analyses

The filters (Sample 1) and any loose fragments were desiccated for 24 hours and weighed to the nearest 0.1 milligram to a constant weight.

The distilled water wash samples (Sample 2) were evaporated at 105°C and ambient pressure in tared beakers, and desiccated to constant weight. All sample residue weights were adjusted by the water blank value.

The weight of the material collected on the glass fiber filter(s) plus the weight of the residue of the nozzle/probe/front-half filter holder washes represents the "total" EPA Method 5 catch. Complete laboratory results are presented in Appendix B of this report.

DISCUSSION OF TEST RESULTS

Particulate test data and test result summaries are presented in Tables 1 and 2 of this report.

No unusual process operating conditions were encountered during any of the test periods.

The amount of particulate matter discharged to the atmosphere from the baghouse was low ($\leq$ 0.026 grains/dscf and $\leq$ 0.25 pounds/hour). The certified observer further corroborated the particulate test findings since no visible emissions were recorded emanating from the stack during the test program.

OCCIDENTAL CHEMICAL COMPANY

Houston, Texas

TABLE I

AMMONIUM SULFATE DRYER BAGHOUSE EXHAUST STACK

Summary of Test Data

Test Data			
Test Number	1	2	3
Test Date	10-26-78	10-26-78	10-26-78
Test Period	0850 - 0953	1044 - 1146	1222 - 1325
Sampling Data			
Sampling Duration, minutes	60.0	60.0	60.0
Nozzle Diameter, inches	0.250	0.250	0.250
Barometric Pressure, inches mercury	29.91	29.91	29.91
Average Orifice Pressure Differential, inches water	2.54	2.77	2.74
Average Dry Gas Temperature at Meter, ^{o}F	96.	99.	98.
Sample Volume at Meter Conditions, cubic feet	54.43	54.15	54.08
Sample Volume at Standard Conditions, [1] cubic feet	50.55	50.09	50.04
Gas Stream Moisture Content			
Total Water Collected by Train, ml	84.	139.	113.5
Standard Volume of Water Collected, cubic feet	3.95	6.54	5.34
Moisture in Gas Stream, percent by volume	7.3	11.6	9.6
Mole Fraction of Dry Gas	0.927	0.884	0.904
Gas Stream Composition			
CO_2, percent by volume	0.0	0.0	0.0
O_2, percent by volume	20.9	20.9	20.9
CO, percent by volume	0.0	0.0	0.0
N_2, percent by volume	79.1	79.1	79.1
Molecular Weight of Wet Gas	28.17	27.70	27.91
Molecular Weight of Dry Gas	28.97	28.97	28.97
Gas Stream Velocity			
Static Pressure, inches water	4.2	4.2	4.1
Absolute Pressure, inches mercury	30.22	30.22	30.21
Average Temperature, ^{o}F	114.	114.	121.
Pitot Tube Calibration Coefficient	0.843	0.843	0.843
Total Number of Sampling Points	12.0	12.0	12.0
Velocity at Actual Conditions, feet/second	51.4	50.1	50.8
Gas Stream Volumetric Flow			
Stack Cross-Sectional Area, square feet	0.45	0.45	0.45
Volumetric Flow at Actual Conditions, cubic feet/minute	1,390.	1,380.	1,370.
Volumetric Flow at Standard Conditions, cubic feet/minute	1,200.	1,130.	1,140.
Percent Isokinetic	93.0	97.5	96.9
Process Operations Data			
Product Production Rate, Tons/hour	17.	17.	17.

[1] Standard Conditions = 68°F, 29.92 inches mercury, dry basis.

OCCIDENTAL CHEMICAL COMPANY

Houston, Texas

TABLE 2

AMMONIUM SULFATE DRYER BAGHOUSE EXHAUST STACK

Summary of Test Results

Test Data			
Test Number	1	2	3
Test Date	10-26-78	10-26-78	10-26-78
Test Time	0850 - 0953	1044 - 1146	1222 - 1325
Gas Flow			
Standard Cubic Feet/minute, dry	1,200.	1,130.	1,140.
Actual Cubic Feet/minute, wet	1,390.	1,380.	1,370.
Particulates			
Nozzle, Probe and Front Half Filter Holder Catch Fraction, g	0.0401	0.0569	0.0809
Filter Catch Fraction, g	0.0115	0.0187	0.0024
Total Particulates, g	0.0516	0.0756	0.0833
Particulate Emissions[1]			
Grains/dry standard cubic foot[2]	0.016	0.023	0.026
Pounds/hour	0.16	0.23	0.25
Visible Emissions			
≥ 5 percent opacity, minutes observed	0.	0.	0.
0 percent opacity, minutes observed	0.	0.	0.
No visible emission, minutes observed	60.	60.	60.

[1] Based on Total Particulates captured by train.

[2] Standard Conditions = 68°F and 29.92 inches mercury.

APPENDIX A

RAW TEST DATA

TRAVERSE POINT LOCATION FOR CIRCULAR DUCTS

PLANT Oxy, Alum - Houston
DATE 10/25/78
SAMPLING LOCATION [illegible]
INSIDE OF FAR WALL TO
OUTSIDE OF PORT, (DISTANCE A) 10 5/8
INSIDE OF NEAR WALL TO
OUTSIDE OF PORT, (DISTANCE B) 3 1/8"
STACK I.D., (DISTANCE A - DISTANCE B) 7 1/2"
NEAREST UPSTREAM DISTURBANCE 8' (10.5 dia)
NEAREST DOWNSTREAM DISTURBANCE 11' (15 dia)
CALCULATOR Calvert

SCHEMATIC OF SAMPLING LOCATION

TRAVERSE POINT NUMBER	FRACTION OF STACK I.D.	STACK I.D.	PRODUCT OF COLUMNS 2 AND 3 (TO NEAREST 1/8 INCH)	DISTANCE B	TRAVERSE POINT LOCATION FROM OUTSIDE OF PORT (SUM OF COLUMNS 4 & 5)
4, X-1		7 1/2 x 8 5/8	5/8	3 1/8	3 [illegible]
2			1 7/8		5.0
3			3 1/8		6 1/4
4			4 3/8		7 1/2
5			5 5/8		8 3/4
6			6 7/8		10.0

PRELIMINARY VELOCITY TRAVERSE

PLANT Oxiy Chemical - Houston
DATE 10-25-78
LOCATION
STACK I.D. 7/2"
BAROMETRIC PRESSURE, in. Hg
STACK GAUGE PRESSURE, in. H_2O
OPERATORS O'Neill / Cellano

SCHEMATIC OF TRAVERSE POINT LAYOUT

TRAVERSE POINT NUMBER	VELOCITY HEAD (Δp_s), in. H_2O	STACK TEMPERATURE (T_s), °F
X 1	.30	127
2	.35	142
3	.40	145
4	.45	147
5	.53	150
6	.54	150
AVERAGE	.445	145.16

TRAVERSE POINT NUMBER	VELOCITY HEAD (Δp_s), in. H_2O	STACK TEMPERATURE (T_s), °F
Y 1	.31	135
2	.37	140
3	.39	143
4	.42	145
5	.51	149
6	.54	149
AVERAGE		

NOMOGRAPH DATA

PLANT [illegible]

DATE 10-25-[illegible]

SAMPLING LOCATION [illegible]

CONTROL BOX NO. 2253

CALIBRATED PRESSURE DIFFERENTIAL ACROSS ORIFICE, in. H_2O	$\Delta H_@$	1.81
AVERAGE METER TEMPERATURE (AMBIENT + 20 °F), °F	$T_{m_{avg.}}$	90
PERCENT MOISTURE IN GAS STREAM BY VOLUME	B_{wo}	12
BAROMETRIC PRESSURE AT METER, in Hg	P_m	
STATIC PRESSURE IN STACK, in. Hg ($P_m \pm 0.073$ x STACK GAUGE PRESSURE in in. H_2O)	P_s	
RATIO OF STATIC PRESSURE TO METER PRESSURE	P_s / P_m	1.0
AVERAGE STACK TEMPERATURE, °F	$T_{s_{avg.}}$	145.2
AVERAGE VELOCITY HEAD, in. H_2O	$\Delta p_{avg.}$	.445
MAXIMUM VELOCITY HEAD, in. H_2O	$\Delta p_{max.}$	.54
C FACTOR		0.90
CALCULATED NOZZLE DIAMETER, in.		
ACTUAL NOZZLE DIAMETER, in.		.250
REFERENCE Δp, in. H_2O		.56

FIELD DATA

PLANT Oxychem
DATE 10-26-78
SAMPLING LOCATION Baghouse Outlet
SAMPLE TYPE Particulate
RUN NUMBER One
OPERATOR Celiano
AMBIENT TEMPERATURE 70°
BAROMETRIC PRESSURE 29.91
STATIC PRESSURE, (P_s)
FILTER NUMBER (s) 24501-A 000-18

PROBE LENGTH AND TYPE 4' Pyrex
NOZZLE I.D. .250
ASSUMED MOISTURE, % 2
SAMPLE BOX NUMBER 1
METER BOX NUMBER 2253
METER $\Delta H_@$ 1.32
C FACTOR 2.7
PITOT TUBE FACTOR
REFERENCE Δp 0.56
NOTE

READ AND RECORD ALL DATA EVERY 5.0 MINUTES

TRAVERSE POINT NUMBER	SAMPLING TIME, min	CLOCK TIME (24 hr CLOCK)	GAS METER READING (V_m), ft^3	VELOCITY HEAD (Δp_s), in. H_2O	ORIFICE PRESSURE DIFFERENTIAL (ΔH), in. H_2O DESIRED	ACTUAL	STACK TEMPERATURE (T_s), °F	DRY GAS METER TEMPERATURE INLET ($T_{m\,in}$), °F	OUTLET ($T_{m\,out}$), °F	PUMP VACUUM, in. Hg	SAMPLE BOX TEMPERATURE, °F	IMPINGER TEMPERATURE, °F
	0	0850	710.171									
X 1	5		714.200	.33	1.78	1.78	112	111	77	1	250±25	60±10
2	10		718.500	.72	2.40	2.40	120	111	80	1		
3	15		723.400	.87	2.90	2.90	118	112	82	1		
4	20		728.500	.91	3.2	3.2	117	113	84	1		
5	25		733.400	1.00	3.3	3.3	117	112	86	1		
6	30		738.514	.91	3.2	3.2	116	111	88	1		
1	5	0926	742.300	.49	1.65	1.65	105	113	86	1		
Y 2	10		746.300	.57	1.88	1.88	113	111	87	1		
3	15		750.700	.73	2.43	2.43	114	112	90	1		
4	20		755.600	.78	2.62	2.62	113	111	90	1		
5	25		760.100	.81	2.70	2.70	112	110	90	1		
6	30		764.612	.73	2.43	2.43	108	109	90	1		
		0953	54.433	0.869	2.541		113.92	96.167				

FIELD DATA

PLANT Oxy Chem.
DATE 10-26-78
SAMPLING LOCATION Baghouse outlet
SAMPLE TYPE Particu.
RUN NUMBER 2
OPERATOR Celiano
AMBIENT TEMPERATURE 73°
BAROMETRIC PRESSURE
STATIC PRESSURE, (P_s)
FILTER NUMBER (s) 24352-A

PROBE LENGTH AND TYPE 4' [illegible]
NOZZLE I.D. [illegible]
ASSUMED MOISTURE, % 7.5
SAMPLE BOX NUMBER 1
METER BOX NUMBER [illegible]
METER $\Delta H_@$ 1.81
C FACTOR 1.0
PITOT TUBE FACTOR
REFERENCE Δp
NOTE [illegible]

READ AND RECORD ALL DATA EVERY 5 MINUTES

TRAVERSE POINT NUMBER	SAMPLING TIME, min / CLOCK TIME (24 hr CLOCK)	GAS METER READING (V_m), ft^3	VELOCITY HEAD (Δp_s), in. H_2O	ORIFICE PRESSURE DIFFERENTIAL (ΔH), in. H_2O DESIRED	ACTUAL	STACK TEMPERATURE (T_s), °F	DRY GAS METER TEMPERATURE INLET ($T_{m\,in}$), °F	OUTLET ($T_{m\,out}$), °F	PUMP VACUUM, in. Hg	SAMPLE BOX TEMPERATURE, °F	IMPINGER TEMPERATURE, °F
	0 1044	764.783									
y-1	5	768.500	.42	1.61	1.61	117	81	81	1.5	250 ± 10	60 ± 10
2	10	773.100	.60	2.25	2.25	113	78	84	2		
3	15	777.800	.70	2.61	2.61	115	[illegible]	85	[illegible]		
4	20	782.380	.72	2.70	2.70	111	101	87	3		
5	25	787.400	.77	2.90	2.90	110	111	87	[illegible]		
6	30	791.452	.69	2.58	2.58	109	114	92	[illegible]		
	stop 1114										
X-1	5 1116 START	795.700	.55	2.10	2.10	111	[illegible]	91	[illegible]		
2	10	800.200	.74	2.78	2.78	112	112	93	[illegible]		
3	15	804.800	.82	3.05	3.05	111	116	94	4		
4	20	809.500	.91	3.4	3.4	113	115	95	4		
5	25	814.300	1.0	3.7	3.7	122	114	94	4.5		
6	30	818.932	.95	3.5	3.5	124	115	94	4		
		54.149	0.[illegible]	2.765		114.[illegible]	95.[illegible]				
	1146										

FIELD DATA

PLANT Oxy Chem.
DATE 10-26-78
SAMPLING LOCATION Baghouse [illegible]
SAMPLE TYPE Initial
RUN NUMBER 3
OPERATOR Cabiano
AMBIENT TEMPERATURE 75°
BAROMETRIC PRESSURE 29.91
STATIC PRESSURE, (P_s)
FILTER NUMBER (s) 24353-A

PROBE LENGTH AND TYPE 4' Pyr
NOZZLE I.D. [illegible]
ASSUMED MOISTURE, % 5
SAMPLE BOX NUMBER 1
METER BOX NUMBER [illegible]
METER $\Delta H_@$ 1.81
C FACTOR .40
PITOT TUBE FACTOR
REFERENCE Δp .41
NOTE [illegible] = .0009 gm
[illegible] = .030 gm

READ AND RECORD ALL DATA EVERY 5 MINUTES

TRAVERSE POINT NUMBER	SAMPLING TIME, min / CLOCK TIME (24 hr CLOCK)	GAS METER READING (V_m), ft^3	VELOCITY HEAD (Δp_s), in. H_2O	ORIFICE PRESSURE DIFFERENTIAL (ΔH), in. H_2O DESIRED	ORIFICE PRESSURE DIFFERENTIAL (ΔH), in. H_2O ACTUAL	STACK TEMPERATURE (T_s), °F	DRY GAS METER TEMPERATURE INLET ($T_{m\,in}$), °F	DRY GAS METER TEMPERATURE OUTLET ($T_{m\,out}$), °F	PUMP VACUUM, in. Hg	SAMPLE BOX TEMPERATURE, °F	IMPINGER TEMPERATURE, °F
	0 1222	819.035									
X-1	5	823.200	.51	1.92	1.92	121	87	86	2	250±10	60±10
2	10	827.800	.72	2.71	2.71	121	102	88	2		
3	15	832.500	.81	3.02	3.02	120	105	88	2		
4	20	837.400	.90	3.30	3.30	122	109	89	2.5		
5	25 stop	842.400	.95	3.55	3.55	123	111	89	3.5		
6	30 1252	847.142	.97	3.63	3.63	124	112	90	4		
	START 1255										
Y-1	5	851.300	.46	1.75	1.75	117	98	89	2.5		
2	10	855.500	.58	2.20	2.20	124	106	90	3		
3	15	859.950	.66	2.50	2.50	121	107	90	3		
4	20	864.600	.72	2.71	2.71	121	112	91	3.5		
5	25	869.300	.76	2.90	2.90	122	118	92	3.5		
6	30	873.110	.72	2.71	2.71	120	120	94	3		
	END 1325										
		54.075									

Oxychem [illegible]

SUMMARY
RECORD OF VISIBLE EMISSIONS

Type of Plant _____ Date _____

Company Name _____ Hours of Observation _____

Plant Address _____ Observer _____

Type of Discharge (STACK) OTHER _____

Discharge Location _____

Height of Point of Discharge _____

Observer's Location:

Distance to Discharge Point _____

Height of Observation Point _____

Direction from Discharge Point _____

Background Description Solid gray of building

Weather: Clear Overcast (Partly Cloudy) Other _____ Sky Color _____

Wind Direction _____ Wind Velocity _____ mi/hr

Plume Description:

Detached: Yes No Not Visible

Color: Black White Other _____

Plume Dispersion Behavior: Looping Coning Fanning

Lofting Fumigating Other _____

Estimated Distance Plume Visible _____

RECORD OF VISIBLE EMISSIONS

Company Name Oxy Chem

Date 10-26-78

Plant Address Houston Tex

Observer J. D. O'Neill

Stack Location Roughouse Dryer

Observer's Location NE of Stack

Weather Conditions 50% overcast

Temp approx 75°

TIME HR	MIN	SECONDS 00	15	30	45	COMMENTS
	30					Run one
	31					
	32					
	33					
	34					
	35					
	36					
	37					
	38					
	39					
	40					
	41					
	42					
	43					
	44					
	45					
	46					
	47					
	48					
	49					
08	50	0	0	0	0	Start test 1 0850
	51	0	0	0	0	
	52	0	0	0	0	
	53	0	0	0	0	
	54	0	0	0	0	
	55	0	0	0	0	
	56	0	0	0	0	
	57	0	0	0	0	
	58	0	0	0	0	
	59	0	0	0	0	

RECORD OF VISIBLE EMISSIONS

Company Name [illegible] Date 10-26-78

Plant Address [illegible] Observer [illegible]

Stack Location [illegible] Observer's Location [illegible]

Weather Conditions

HR	MIN	SECONDS 00	15	30	45	COMMENTS
	00					
	01					
	02					
	03					
	04					
	05					
	06					
	07					
	08					
	09					
	10					
	11					
	12					
	13					
	14	0	0	0	0	
	15	0	0	0	0	
	16	0	0	0	0	
	17	0	0	0	0	
	18	0	0	0	0	
09	19	0	0	0	0	
	20					End x port Test one
	21					
	22					
	23					
	24					
09	25	0	0	0	0	Start y port Test one
	26	0	0	0	0	
	27	0	0	0	0	
	28	0	0	0	0	
09	29	0	0	0	0	

RECORD OF VISIBLE EMISSIONS

Company Name Oxy chem

Date 10-26-78

Plant Address Houston Texas

Observer J O'Neill

Stack Location [illegible]

Observer's Location [illegible]

Weather Conditions

TIME HR	MIN	SECONDS 00	15	30	45	COMMENTS
09	30	0	0	0	0	
	31	0	0	0	0	
	32	0	0	0	0	
	33	0	0	0	0	
	34	0	0	0	0	
	35	0	0	0	0	
	36	0	0	0	0	
	37	0	0	0	0	
	38	0	0	0	0	
	39	0	0	0	0	
	40	0	0	0	0	
	41	0	0	0	0	
	42	0	0	0	0	
	43	0	0	0	0	
	44	0	0	0	0	
	45	0	0	0	0	
	46	0	0	0	0	
	47	0	0	0	0	
	48	0	0	0	0	
	49	0	0	0	0	
	50	0	0	0	0	
	51	0	0	0	0	
	52	0	0	0	0	
	53	0	0	0	0	
09	54	0	0	0	0	End Test one
	55					
	56					
	57					
	58					
	59					

RECORD OF VISIBLE EMISSIONS

Company Name Oxy Chem. Date 10-26-78

Plant Address Houston Texas Observer J. O'Neill

Stack Location Baghouse No. 4 Observer's Location [illegible]

Weather Conditions

TIME HR	MIN	SECONDS 00	15	30	45	COMMENTS
	30					Run 3
	31					
	32					
	33					
	34					
	35					
	36					
	37					
	38					
	39					
	40					
	41					
	42					
	43					
10	44	0	0	0	0	Forty Start 1044
	45	0	0	0	0	
	46	0	0	0	0	
	47	0	0	0	0	
	48	0	0	0	0	
	49	0	0	0	0	
	50	0	0	0	0	
	51	0	0	0	0	
	52	0	0	0	0	
	53	0	0	0	0	
	54	0	0	0	0	
	55	0	0	0	0	
	56	0	0	0	0	
	57	0	0	0	0	
	58	0	0	0	0	
	59	0	0	0	0	

RECORD OF VISIBLE EMISSIONS

Company Name Dow Chem

Date [illegible]

Plant Address Houston Tex.

Observer [illegible]

Stack Location [illegible]

Observer's Location [illegible]

Weather Conditions [illegible]

TIME						COMMENTS
HR	MIN	SECONDS 00	15	30	45	
[illegible]	00	[illegible]	[illegible]	[illegible]	[illegible]	
	01	[illegible]	[illegible]	[illegible]	[illegible]	
	02	0	0	0	0	
	03	[illegible]	0	[illegible]	[illegible]	
	04	[illegible]	0	[illegible]	[illegible]	
	05	[illegible]	[illegible]	[illegible]	[illegible]	
	06	[illegible]	[illegible]			
	07	[illegible]	0	[illegible]	[illegible]	
	08	[illegible]	0	0	[illegible]	
	09	0	0	[illegible]	[illegible]	
	10	0	0	0	0	
	11	0	0	0	0	
	12	0	0	0	0	
	13	0	0	0	0	
11	14	0	0	0	[illegible]	End Port Y
	15					
11	16	[illegible]	0	0	0	Start Port X
	17	0	0	0	0	
	18	0	0	0	0	
	19	0	0	0	0	
	20	0	0	0	0	
	21	0	0	0	0	
	22	0	0	0	0	
	23	0	0	0	0	
	24	0	0	[illegible]	0	
	25	[illegible]	0	[illegible]	[illegible]	
	26	[illegible]	[illegible]	[illegible]	[illegible]	
	27	[illegible]	0	[illegible]	[illegible]	
	28	0	0	0	0	
11	29	0	0	0	0	

RECORD OF VISIBLE EMISSIONS

Company Name Oxy Chem

Date 10-26-78

Plant Address Houston Texas

Observer J. O'Neill

Stack Location [illegible]

Observer's Location [illegible]

Weather Conditions

TIME HR	MIN	SECONDS 00	15	30	45	COMMENTS
11	30	0	0	0	0	Run [illegible]
	31	0	0	0	0	
	32	0	0	0	0	
	33	0	0	0	0	
	34	0	0	0	0	
	35	0	0	0	0	
	36	0	0	0	0	
	37	0	0	0	0	
	38	0	0	0	0	
	39	0	0	0	0	
	40	0	0	0	0	
	41	0	0	0	0	
	42	0	0	0	0	
	43	0	0	0	0	
	44	0	0	0	0	
11	45	0	0	0	0	End Test Two
	46					
	47					
	48					
	49					
	50					
	51					
	52					
	53					
	54					
	55					
	56					
	57					
	58					
	59					

RECORD OF VISIBLE EMISSIONS

Company Name [illegible] Date 10-26-78

Plant Address [illegible] Observer [illegible]

Stack Location [illegible] Observer's Location [illegible]

Weather Conditions [illegible]

HR	MIN	TIME SECONDS 00	15	30	45	COMMENTS
	00					
	01					
	02					
	03					
	04					
	05					
	06					
	07					
	08					
	09					
	10					
	11					
	12					
	13					
	14					
	15					
	16					
	17					
	18					
	19					
	20					
	21					
12	22	0	0	0	0	Start run 3 1222
	23	0	0	0	0	
	24	0	0	0	0	
	25	0	0	0	0	
	26	0	0	0	0	
	27	0	0	0	0	
	28	0	0	0	0	
	29	0	0	0	0	

RECORD OF VISIBLE EMISSIONS

Company Name [illegible] Date [illegible]

Plant Address Houston [illegible] Observer [illegible]

Stack Location Observer's Location

Weather Conditions

TIME HR	MIN	SECONDS 00	15	30	45	COMMENTS
12	30	0	0	0	0	Run 3
	31	0	0	0	0	
	32	0	0	0	0	
	33	0	0	0	0	
	34	0	0	0	0	
	35	0	0	0	0	
	36	0	0	0	0	
	37	0	0	0	0	
	38	0	0	0	0	
	39	0	0	0	0	
	40	0	0	0	0	
	41	0	0	0	0	
	42	0	0	0	0	
	43	0	0	0	0	
	44	0	0	0	0	
	45	0	0	0	0	
	46	0	0	0	0	
	47	0	0	0	0	
	48	0	0	0	0	
	49	0	0	0	0	
	50	0	0	0	0	
12	51	0	0	0	0	
	52					
12	53	0	0	0	0	Start Port Y Run 3
	54	0	0	0	0	
	55	0	0	0	0	
	56	0	0	0	0	
	57	0	0	0	0	
	58	0	0	0	0	
	59	0	0	0	0	

RECORD OF VISIBLE EMISSIONS

Company Name Dow Chem

Date [illegible]

Plant Address [illegible]

Observer [illegible]

Stack Location [illegible]

Observer's Location [illegible]

Weather Conditions

HR	MIN	TIME SECONDS 00	15	30	45	COMMENTS
	00	[illegible]	[illegible]	[illegible]	[illegible]	[illegible]
	01	[illegible]	[illegible]	[illegible]	[illegible]	
	02	[illegible]	[illegible]	[illegible]	[illegible]	
	03	[illegible]	[illegible]	[illegible]	[illegible]	
	04	[illegible]	[illegible]	[illegible]	[illegible]	
	05	[illegible]	[illegible]	[illegible]	[illegible]	
	06	[illegible]	[illegible]	[illegible]	[illegible]	
	07	[illegible]	[illegible]	[illegible]	[illegible]	
	08	[illegible]	[illegible]	[illegible]	[illegible]	
	09	[illegible]	[illegible]	[illegible]	[illegible]	
	10	[illegible]	[illegible]	[illegible]	[illegible]	
	11	[illegible]	[illegible]	[illegible]	[illegible]	
	12	[illegible]	[illegible]	[illegible]	[illegible]	
	13	[illegible]	[illegible]	[illegible]	[illegible]	
	14	[illegible]	[illegible]	[illegible]	[illegible]	
	15	[illegible]	[illegible]	[illegible]	[illegible]	
	16	[illegible]	[illegible]	[illegible]	[illegible]	
	17	[illegible]	[illegible]	[illegible]	[illegible]	
	18	[illegible]	[illegible]	[illegible]	[illegible]	
	19	0	0	0	0	
	20	[illegible]	[illegible]	[illegible]	0	
	21	[illegible]	[illegible]	[illegible]	0	
13	22	0	0	0	0	End run 3
	23					
	24					
	25					
	26					
	27					
	28					
	29					

ANALYTICAL DATA

PLANT Oxy Chem

DATE 10-26-78

SAMPLING LOCATION [illegible]

SAMPLE TYPE [illegible]

RUN NUMBER [illegible]

SAMPLE BOX NUMBER 1

CLEAN UP MAN [illegible]

COMMENTS:

FRONT HALF

LABORATORY RESULTS

ACETONE WASH OF NOZZLE, PROBE, CYCLONE (BYPASS), FLASK, FRONT HALF OF FILTER HOLDER — CONTAINER OCO-1P 40.1 mg

FILTER NUMBER [illegible] — CONTAINER OCO-1F 11.5 mg

FRONT HALF SUBTOTAL 51.6 mg

BACK HALF

IMPINGER CONTENTS AND WATER WASH OF IMPINGERS, CONNECTORS, AND BACK HALF OF FILTER HOLDER — CONTAINER _____ _____ mg

ETHER-CHLOROFORM EXTRACTION _____ mg

ACETONE WASH OF IMPINGERS, CONNECTORS, AND BACK HALF OF FILTER HOLDER — CONTAINER _____ _____ mg

BACK HALF SUBTOTAL _____ mg

TOTAL WEIGHT _____ mg

MOISTURE

IMPINGERS

FINAL VOLUME 272 ml

INITIAL VOLUME 200 ml

NET VOLUME 72 ml

SILICA GEL

FINAL WEIGHT 212 g _____ g

INITIAL WEIGHT [illegible] g _____ g

NET WEIGHT [illegible] g _____ g

SUBTOTAL _____ g

TOTAL MOISTURE [illegible] g

ANALYTICAL DATA

PLANT [illegible]

DATE [illegible]

SAMPLING LOCATION

SAMPLE TYPE

RUN NUMBER

SAMPLE BOX NUMBER

CLEAN UP MAN

COMMENTS:

FRONT HALF

LABORATORY RESULTS

ACETONE WASH OF NOZZLE, PROBE, CYCLONE (BYPASS), FLASK, FRONT HALF OF FILTER HOLDER — CONTAINER [illegible] 56.9 mg

FILTER NUMBER [illegible] — CONTAINER [illegible] 18.7 mg

FRONT HALF SUBTOTAL 75.6 mg

BACK HALF

IMPINGER CONTENTS AND WATER WASH OF IMPINGERS, CONNECTORS, AND BACK HALF OF FILTER HOLDER — CONTAINER _____ _____ mg

ETHER-CHLOROFORM EXTRACTION _____ mg

ACETONE WASH OF IMPINGERS, CONNECTORS, AND BACK HALF OF FILTER HOLDER — CONTAINER _____ _____ mg

BACK HALF SUBTOTAL _____ mg

TOTAL WEIGHT _____ mg

MOISTURE

IMPINGERS

FINAL VOLUME 375 ml

INITIAL VOLUME 250 ml

NET VOLUME 125 ml

125
14
139

SILICA GEL

FINAL WEIGHT 214 g _____ g

INITIAL WEIGHT 200 g _____ g

NET WEIGHT 14 g _____ g

SUBTOTAL _____ g

TOTAL MOISTURE 139 g

ANALYTICAL DATA

PLANT _____

DATE _____

SAMPLING LOCATION _____

SAMPLE TYPE _____

RUN NUMBER _____

SAMPLE BOX NUMBER _____

CLEAN UP MAN _____

COMMENTS.

FRONT HALF

LABORATORY RESULTS

ACETONE WASH OF NOZZLE, PROBE, CYCLONE (BYPASS), FLASK, FRONT HALF OF FILTER HOLDER — CONTAINER _____ 80.9 mg

FILTER NUMBER 2453-A _____ — CONTAINER _____ 2.4 mg

FRONT HALF SUBTOTAL 83.3 mg

BACK HALF

IMPINGER CONTENTS AND WATER WASH OF IMPINGERS, CONNECTORS, AND BACK HALF OF FILTER HOLDER — CONTAINER _____ _____ mg

ETHER-CHLOROFORM EXTRACTION _____ mg

ACETONE WASH OF IMPINGERS, CONNECTORS, AND BACK HALF OF FILTER HOLDER — CONTAINER _____ _____ mg

BACK HALF SUBTOTAL _____ mg

TOTAL WEIGHT _____ mg

MOISTURE

IMPINGERS

FINAL VOLUME 301 ml

INITIAL VOLUME 200 ml

NET VOLUME 101 ml

101.0
12.5
113.5

SILICA GEL

FINAL WEIGHT 212.5 g _____ g

INITIAL WEIGHT 200 g _____ g

NET WEIGHT 12.5 g _____ g

TOTAL MOISTURE 113.5 g

SUBTOTAL _____ g

TITLE Occ - Chemical, Houston, Texas

Project No. _____

Book No. _____

From Page No. C

Sample #	Beaker #	TSV ML	FINAL(1)	FINAL(2)	TARE(1)	TARE(2)	ΔWT.	-BLK. CORR.	Net wt. GMS.
OCO-1P	O-8	380	111.7637	111.7639	111.7209	111.7212	.0428	.0027	.0401
OCO-2P	13	365	103.0135	103.0135	102.9540	102.9543	.0595	.0026	.0569
OCO-3P	SU	365	98.8588	98.8590	98.7753	98.7755	.0835	.0026	.0809
Blank	Y86	250	111.6683	111.6688	111.6665	111.6669	.0018	—	—

To Page No. ___

Witnessed & Understood by me.	Date	Invented by	Date
J.D.O.	11-3-78	Recorded by	

TITLE 4" Glass Fiber 900 AF

Project No. _____ Book No. _____

COPY

From Page No. ____

CLIENT/SAMPLE	FILTER #	FINAL 1	FINAL 2	FINAL 3	TARE	TARE 2	
Oxy-Chem Houston set (2)	24351-A	.3842	.3843	.3842	.3728	.3727	0.0
	24352-A	.4295	.4296	.4296	.4108	.4108	0.0
	24353-A	.4137	.4139	.4137	.4113	.4113	0.0
	24354-A				.4122	.4122	
	24355-A				.4132	.4132	
Anchor Hocking Balt. Md 11-4-78	24356-A	0.4992	0.4992		.4110	.4112	0.0
	24357-A	0.4878	0.4879		.4114	.4114	0.0
	24358-A	0.4701	0.4700		.4142	.4143	
	24359-A				.4109	.4109	
	24387				.4050	.4048	
	24388				.4023	.4023	
	24389				.4046	.4046	
	24390				.4052	.4054	
	24391				.4049	.4048	
	24392				.4043	.4043	
	24393				.4034	.4035	
	24394				.4048	.4047	
	24395				.4075	.4075	
	24396				.4051	.4050	
	24397				.3756	.3757	
	24398				.3764	.3762	
	24399				.3761	.3760	
	24400				.3782	.3781	
	24401				.3792	.3789	
	24402				.3801	.3793	
	24403				.3806	.3803	
	24404				.3812	.3811	
	24405				.3827	.3826	
	24406				.3820	.3821	
	24407				.3827	.3831	
	24408				.3838	.3840	
	24409				.3821	.3823	
	24410				.3801	.3803	
	24411				0.4297	0.4296	
	24412				0.4435	0.4434	
	24413				0.4398	0.4397	

Witnessed & Understood by me,	Date	Invented by	Date
Jon Melonay	11-7-78	Recorded by	

APPENDIX C

SAMPLE CALCULATIONS

SAMPLE CALCULATIONS

Test Run 1 - Ammonium Sulfate Dryer Baghouse Exhaust Stack

1. Volume of dry gas sampled at standard conditions (68°F, 29.92 in. Hg), dscf.

$$V_{m(std)} = \frac{17.647 \times Y \times V_m \times \left(P_b + \frac{\Delta H}{13.6}\right)}{\left(T_m + 460\right)}$$

$$V_{m(std)} = \frac{17.647 \times 0.973 \times 54.43 \times \left(29.91 + \frac{2.54}{13.6}\right)}{\left(96.2 + 460\right)} = 50.55$$

Where:

$V_{m(std)}$ = Volume of gas sample measured by the dry gas meter, corrected to standard conditions, dscf.

V_m = Volume of gas sample measured by the dry gas meter at meter conditions, dcf.

P_b = Barometric pressure, in. Hg.

ΔH = Average pressure drop across the orifice meter, in. H_2O.

T_m = Average dry gas meter temperature, °F.

17.647 = Factor that includes ratio of standard temperature (528°R) to standard pressure (29.92 in. Hg). °R/in. Hg.

Y = Dry gas meter calibration factor.

2. Volume of water vapor in the gas sample corrected to standard conditions, scf.

$$V_{w(std)} = (0.04707 \times V_{wc}) + 0.04715 \times W_{wsg}$$

$$V_{w(std)} = (0.04707 \times 72) + (0.04715 \times 12) = 3.95$$

Where:

$V_{w(std)}$ = Volume of water vapor in the gas sample corrected to standard conditions, scf.

V_{wc} = Volume of liquid condensed in impingers, ml.

W_{wsg} = Weight of water vapor collected in silica gel, g.

0.04707 = Factor which includes the density of water (0.002201 lb/ml), the molecular weight of water (18.0 lb/lb-mole), the ideal gas constant [21.85 (in. Hg) $(ft^3)/(lb\text{-}mole)(^oR)$] ; absolute temperature at standard conditions (528^oR), absolute pressure at standard conditions (29.92 in. Hg), ft^3/ml.

0.04715 = Factor which includes the molecular weight of water (18.0 lb/lb-mole), the ideal gas constant [21.85 (in. Hg)$(ft^3)/(lb\text{-}mole)(^oR)$]. absolute temperature at standard conditions (528^oR), absolute pressure at standard conditions (29.92 in. Hg), and 453.6 g/lb, ft^3/g.

3. Moisture content.

$$B_{ws} = \frac{V_{w(std)}}{V_{w(std)} + V_{m(std)}}$$

$$B_{ws} = \frac{3.95}{3.95 + 50.55} = 0.073$$

Where:

B_{ws} = Proportion of water vapor, by volume, in the gas stream, dimensionless.

4. Mole fraction of dry gas.

$$M_d = 1 - B_{ws}$$

$$M_d = 1 - 0.073 = 0.927$$

Where:

M_d = Mole fraction of dry gas, dimensionless

5. Dry molecular weight of gas stream, lb/lb-mole.

$$MW_d = 0.440(\%CO_2) + 0.320\ (\%O_2) + 0.280\ (\%N_2 + \%\ CO)$$

MW_d = (0.440 x)+ (0.320 x) +[0.280 (+)]

= 28.97 (Ambient air)

Where:

MW_d = Dry molecular weight, lb/lb-mole.

$\%CO_2$ = Percent carbon dixoide by volume, dry basis.

$\%O_2$ = Percent oxygen by volume, dry basis.

$\%N_2$ = Percent nitrogen by volume, dry basis.

%CO = Percent carbon monoxide by volume, dry basis.

0.440 = Molecular weight of carbon dioxide, divided by 100.

0.320 = Molecular weight of oxygen, divided by 100.

0.280 = Molecular weight of nitrogen or carbon monoxide, divided by 100.

6. Actual molecular weight of gas stream (wet basis), lb/lb-mole.

$$MW_s = (MW_d \times M_d) + [18 \ (1 - M_d)]$$

$$MW_s = (28.97 \times 0.927) + [18 \ (1 - 0.927)]$$

$$= 28.17$$

Where:

MW_s = Molecular weight of wet gas, lb/lb-mole.

18 = Molecular weight of water, lb/lb-mole.

7. Average velocity of gas stream at actual conditions, ft/sec.

$$v_s = 85.49 \times C_p \times (\sqrt{\Delta p})_{avg.} \times \left[\frac{T_s \ (avg)}{P_s \times MW_s} \right]^{\frac{1}{2}}$$

$$v_s = 85.49 \times 0.843 \times 0.869 \times \left[\frac{(113.9 + 460}{30.22 \times 28.17}\right]^{\frac{1}{2}}$$

$$= 51.4$$

Where:

v_s = Average gas stream velocity, ft/sec.

85.49 = Pitot tube constant, ft/sec x $\frac{(lb/lb\text{-}mole)(in.Hg)^{\frac{1}{2}}}{(^oF)\ (in.\ H_2O)}$.

C_p = Pitot tube coefficient, dimensionless.

Δp = Velocity head of stack gas, in H_2O.

T_s = Absolute gas stream temperature, ^oR.

P_s = Absolute gas stack pressure, in. Hg.

8. Average gas stream dry volumetric flow rates, dscf/min.

$$Q_{s(std)} = \frac{1058.8 \times v_s \times A_s \times M_d \times P_s}{T_s}$$

$$Q_{s(std)} = \frac{1058.8 \times 51.4 \times 0.45 \times 28.97 \times 30.22}{(\quad + 460)}$$

$$= 1,200.$$

Where:

$Q_{s(std)}$ = Volumetric flow rate of dry stack gas, corrected to standard conditions, dscf/min.

A_s = Cross-sectional area of stack, ft^2.

1058.8 = Factor which includes standard temperature (528^oR), standard pressure (29.92 in. Hg), and 60 sec/min, $\frac{(^oR)\ (sec)}{(in.\ Hg)(min)}$.

9. Isokinetic variation calculated from intermediate values, percent.

$$I = \frac{17.316 \times T_s \times V_{m(std)}}{v_s \times \theta \times P_s \times M_d \times (D_n)^2}$$

$$I = \frac{17.316 \times 573.9 \times 50.55}{51.4 \times 60 \times 30.22 \times 0.927 \times (0.250)^2}$$

$$= 93.0$$

Where:

I = Percent of isokinetic sampling.

θ = Total sampling time, minutes.

D_n = Diameter of nozzle, inches.

17.316 = Factor which includes standard temperature (528°R), standard pressure (29.92 in. Hg), the formula for calculating area of circle $\frac{\pi D^2}{4}$, conversion of square feet to square inches (144), conversion of seconds to minutes (60), and conversion to percent (100), $\frac{(\text{in. Hg})\ (\text{in}^2)\ (\text{min})}{(^{\circ}\text{R})\ (\text{ft}^2)\ (\text{sec})}$.

10. Particulate concentration, gr/dscf.

$$C_1 = 0.015432 \times \frac{M_t}{V_{m(std)}}$$

$$C_1 = 0.015432 \times \frac{51.6}{50.55} = 0.016$$

Where:

C_1 = Particulate concentration, gr/dscf.

M_t = Total weight of particulate caught by train, mg.

0.015432 = Conversion factor of gr/mg.

11. Particulate mass emission rate, lb/hr.

$$PMR_t = 0.0085714 \times C_1 \times Q_{s(std)}$$

$$= 0.0085714 \times 0.016 \times 1,196 = 0.16$$

Where:

PMR_t	=	Particulate mass emission rate, lb/hr.
0.0085714	=	Conversion factor relating minutes to hours (60), and grains to pounds (7,000), (lb) (min)/(gr) (hr).

APPENDIX D

EQUIPMENT CALIBRATION DATA

Date [illegible] Box No. 2253

Barometric pressure, P_b = [illegible] in. Hg Dry gas meter No. [illegible]

Orifice manometer setting, ΔH, in. H_2O	Gas volume wet test meter V_w, ft^3	Gas volume dry gas meter V_d, ft^3	Temperature: Wet test, Meter t_w, °F	Temperature: Dry gas meter, Inlet t_{di}, °F	Temperature: Dry gas meter, Outlet t_{do}, °F	Temperature: Dry gas meter, Average t_d, °F	Time θ, min	Y	ΔH@
0.5	5.000	5.182	68 67	90 88	81 72	74.50	12.733	.980	1.755
1.0	5.001	5.256	67 66	90 85	71 75	80.25	9.30	.974	1.880
2.0	~~10.000~~	5.257	69 67	95 102	74 [illegible]	89.00	6.65	.981	1.911
2.5 ~~1.0~~	10.000	10.063	69	100	75	88.25	11.766	.989	1.854
1.5 ~~6.0~~	~~10.000~~	5.355	67	92 103	81 [illegible]	89.75	7.583	.971	1.545
8.0	10								
						Average		.979	1.856

Calculations

ΔH	$\frac{\Delta H}{13.6}$	Y: $\frac{V_w P_b (t_d + 460)}{V_d\left(P_b + \frac{\Delta H}{13.6}\right)(t_w + 460)}$	ΔH@: $\frac{0.0317\ \Delta H}{P_b (t_d + 460)}\left[\frac{(t_w + 460)\ \theta}{V_w}\right]^2$
0.5	0.0368		
1.0	0.0737		
2.0	0.147		
4.0	0.294		
6.0	0.431		
8.0	0.588		

Y = Ratio of accuracy of wet test meter to dry test meter. Tolerance = ± 0.01

ΔH@ = Orifice pressure differential that gives 0.75 cfm of air at 70° F and 29.92 inches of mercury, in. H_2O. Tolerance - ± 0.15

VAC.= 28" Hg
L.C.= .001 cfm

Date 10-30-78 Box No. 2253

Barometric pressure, P_b = 30.65 in. Hg Dry gas meter No. ORIGINAL

Orifice manometer setting, ΔH, in. H_2O	Gas volume wet test meter V_w, ft^3	Gas volume dry gas meter V_d, ft^3	Temperature: Wet test, Meter t_w, °F	Dry gas meter, Inlet t_{di}, °F	Dry gas meter, Outlet t_{do}, °F	Dry gas meter, Average t_d, °F	Time θ, min	γ	ΔH@
0.5	5.001	5.165	65° 64	74 88	66 70	74.50	12.90	.9855	1.771
1.0	5.001	5.104	69	79 92	67 73	75.25	9.75	1.004	1.884
2.0	10.002	10.289	67 64	85 101	75 77	83.75	13.183	1.004	1.815
1.5 ~~4.0~~	~~10~~ 5.00	5.225	67	88 103	76 78	85.50	7.630	.9926	1.818
1.5 ~~6.0~~	~~10~~ 5.002	5.293	69	90 103	77 79	86.50	7.616	.9520	1.807
8.0	10								
						Average		.974	1.819

Calculations

ΔH	$\frac{\Delta H}{13.6}$	γ: $\frac{V_w P_b (t_d + 460)}{V_d\left(P_b + \frac{\Delta H}{13.6}\right)(t_w + 460)}$	ΔH@: $\frac{0.0317\ \Delta H}{P_b (t_d + 460)}\left[\frac{(t_w + 460)\ \theta}{V_w}\right]^2$
0.5	0.0368		
1.0	0.0737		
2.0	0.147		
4.0	0.294		
6.0	0.431		
8.0	0.588		

γ = Ratio of accuracy of wet test meter to dry test meter. Tolerance = ± 0.01

ΔH@ = Orifice pressure differential that gives 0.75 cfm of air at 70° F and 29.92 inches of mercury, in. H_2O. Tolerance - ± 0.15

BY BLJ DATE 6/2/77 WESTON ENVIRONMENTAL CONSULTANTS & DESIGNERS SHEET ____ OF ____

CHKD BY ____ DATE ____ W.O. NO. ____

PROJECT ____

SUBJECT Pitot Tube Calibration Factors

Pitot ID #	"A" Side 0.90	0.46	0.192	0.024	Avg.	"B" Side 0.90	0.46	0.192	0.024	Av
E	.848	.832	.830	.844	.839	.848	.832	.839	.832	.838
G	.821	.821	.813	.820	.819	.825	.825	.828	.820	.825
H	.839	.840	.848	.844	.843	.843	.830	.837	.844	.839
I	.839	.841	.828	.832	.835	.830	.834	.828	.832	.831
J	.830	.836	.820	.820	.827	.834	.829	.820	.820	.826
=	.65	.330	.125			.65	.330	.125		
W	.848	.852	.851		.850	.846	.850	.849		.848
X	.856	.857	.861		.858	.858	.852	.854		.855
Y	.841	.848	.837		.842	.841	.846	.849		.845
Z	.856	.855	.859		.857	.841	.850	.849		.847

THE PENNSYLVANIA STATE UNIVERSITY
226 FENSKE LABORATORY
UNIVERSITY PARK, PENNSYLVANIA 16802

Center for Air Environment Studies

Area Code 814
865-1415

June 5, 1978

Mr. Jeffrey D. O'Neill
Roy F. Weston, Incorporated
Weston Way
West Chester, Pennsylvania 19380

Dear Mr. O'Neill:

Please be advised that you successfully completed the "Visible Emissions" course given June 1, 1978. You are certified to evaluate visible emissions since you met the standards described as Method 9 in the Federal Register of November 12, 1974. These standards are:

1) To maintain an average deviation of less than 7.5% for a set of 25 white smoke plumes and a set of 25 black smoke plumes.

2) To have no single reading of the 50 plumes to be in error by more than 15%.

Sincerely,

Robert Jennings Heinsohn
Professor of Mechanical Engineering
Project Director

RJH/cb

Enclosure

THE PENNSYLVANIA STATE UNIVERSITY

CONTINUING EDUCATION

This certifies that

JEFFREY D. O'NEILL

has completed

VISIBLE EMISSIONS EVALUATION SEMINAR

Recertified: Date:

Robert J. Hensel June '78
Certified Date:

Recertified: Date:

Robert J. Hensel
PROJECT DIRECTOR OF VISIBLE EMISSIONS
TRAINING PROGRAM
CENTER FOR AIR ENVIRONMENT STUDIES

Floyd B. Fischer
VICE PRESIDENT FOR
CONTINUING EDUCATION

APPENDIX E

DETAILED BAGHOUSE INFORMATION

systematic way

Efficient, low-maintenance filters for any air volume.

Carter-Day type "CS" filter

Exclusive combined shock design. Efficiency up to 99.99+%!

Designed to operate at higher air-to-cloth ratios on difficult applications. Requires only 80 PSIG of compressed air. Can be supplied with individual hoppers or trough type hoppers for multiple installations. For complete information, ask for Bulletin No. L-1126R2.

These diagrams illustrate the unique Dual Reverse air cleaning system of the "CS" filter.

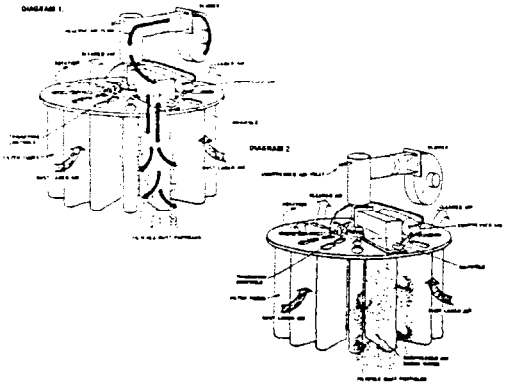

Carter-Day type "RJ" filter

Performance proven in hundreds of installations.

Versatile — handles air streams with light, medium or heavy material concentrations. Efficient—up to 99.99+%. Simple design. Automatic, continuous, low-cost operation. Can be supplied with individual hoppers or trough type hoppers for multiple installations. For complete information, ask for Bulletin No. G-464R.

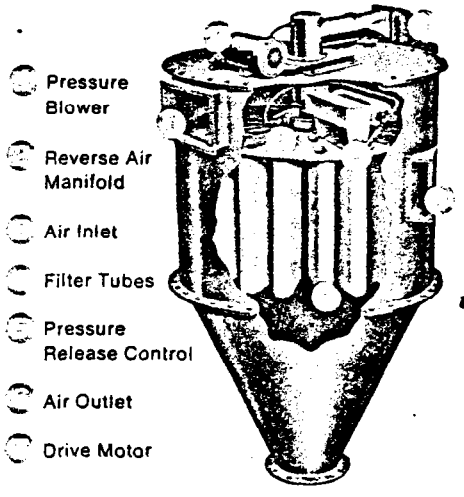

CAPACITY TABLE — DAY "RJ" FILTERS

Filter No.	Cloth Area Sq. Ft.	Cubic Feet of Air/Min. (CFM) Air to Media Ratio 5	10	15	20	No. Sleeves	Sleeve Lgth.	Blower No.	Blower H.P.	Drive H.P.
12RJ26	57.5	285	570	855	1140	12	26	3A1	1	¼
12RJ36	83.5	418	835	1252	1670	12	36	3A3	1½	¼
12RJ48	105	525	1050	1575	2100	12	48	3A3	2	¼
12RJ60	131	655	1310	1965	2620	12	60	3A6	2	¼
18RJ36	125	625	1250	1875	2500	18	36	3A3	1½	¼
18RJ48	165	825	1650	2475	3300	18	48	3A3	2	¼
18RJ60	208	1040	2080	3120	4160	18	60	3A6	3	¼
24RJ37	200	1000	2000	3000	4000	24	37	3A3	2	¼
24RJ48	255	1300	2600	3900	5200	24	48	3A6	2	¼
24RJ60	320	1600	3200	4800	6400	24	60	3A6	3	¼
24RJ72	385	1925	3850	5775	7700	24	72	4A	5	¼
24RJ84	448	2240	4480	6720	8960	24	84	4A	7½	¼
72RJ37	600	3000	6000	9000	12000	72	36	4A	5	⅓
72RJ48	765	3825	7650	11475	15300	72	48	4A	7½	⅓
72RJ60	960	4800	9600	14400	19200	72	60	4A	7½	⅓
72RJ72	1155	5775	11550	17325	23100	72	72	4A	10	⅓
72RJ84	1340	6700	13400	20100	26800	72	84	4B	15	⅓
72RJ96	1530	7650	15300	22950	30600	72	96	4B	15	⅓

Multiple groupings can be furnished for greater capacities.

CAPACITY TABLE — DAY TYPE "CS" DUST FILTER

Filter No.	Cloth Area Sq. Ft.	Cubic Feet of Air/Min. (CFM) Air to Media Ratio 10	15	20	25	No. Sleeves	Sleeve Lgth.	Blower No.	Blower H.P.	Drive H.P.	SCFM* Comp. Air @ 80 PSIG
12CS26	57.5	575	865	1150	1440	12	26	3A1	1½	¼	4.1
12CS36	83.6	835	1250	1670	2080	12	36	3A1	1½	¼	4.1
12CS48	105	1050	1575	2100	2620	12	48	3A1	2	¼	4.1
12CS60	131	1310	1965	2620	3280	12	60	3A1	2	¼	4.1
18CS36	125	1250	1875	2500	3120	18	36	3A1	2	¼	5.6
18CS48	167	1670	2500	3340	4170	18	48	3A1	2	¼	5.6
18CS60	208	2080	3110	4160	5200	18	60	3A1	3	¼	5.6
24CS37	200	2000	3000	4000	5000	24	37	3A1	3	¼	6.6
24CS48	255	2550	3820	5100	6370	24	48	3A1	3	¼	6.6
24CS60	320	3200	4800	6400	8000	24	60	3A1	3	¼	6.6
24CS72	384	3840	5750	7680	9600	24	72	3A1	3	¼	6.6
24CS84	448	4480	6700	8960	11200	24	84	3A3	5	¼	6.6
72CS37	600	6000	9000	12000	15000	72	37	3A3	5	⅓	13.9
72CS48	765	7650	11500	15300	19100	72	48	3A3	5	⅓	13.9
72CS60	960	9600	14400	19200	24000	72	60	3A3	5	⅓	13.9
72CS72	1150	11500	17250	23000	28800	72	72	3A6	7½	⅓	13.9
72CS84	1340	13400	20100	26800	33500	72	84	3A6	7½	⅓	13.9
72CS96	1530	15300	23000	30600	38300	72	96	3A6	7½	⅓	13.9

*Compressed air consumption may be reduced through use of a timer, available when applicable at extra cost.

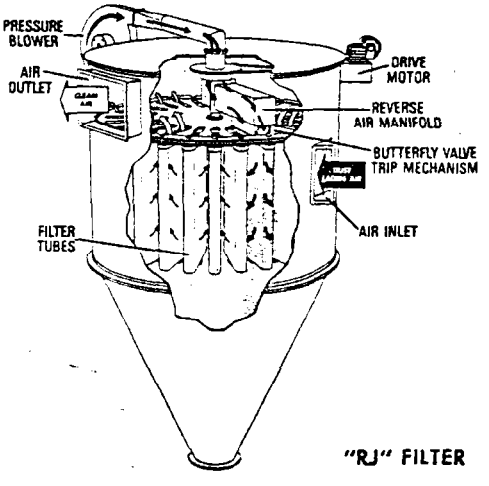

"RJ" FILTER

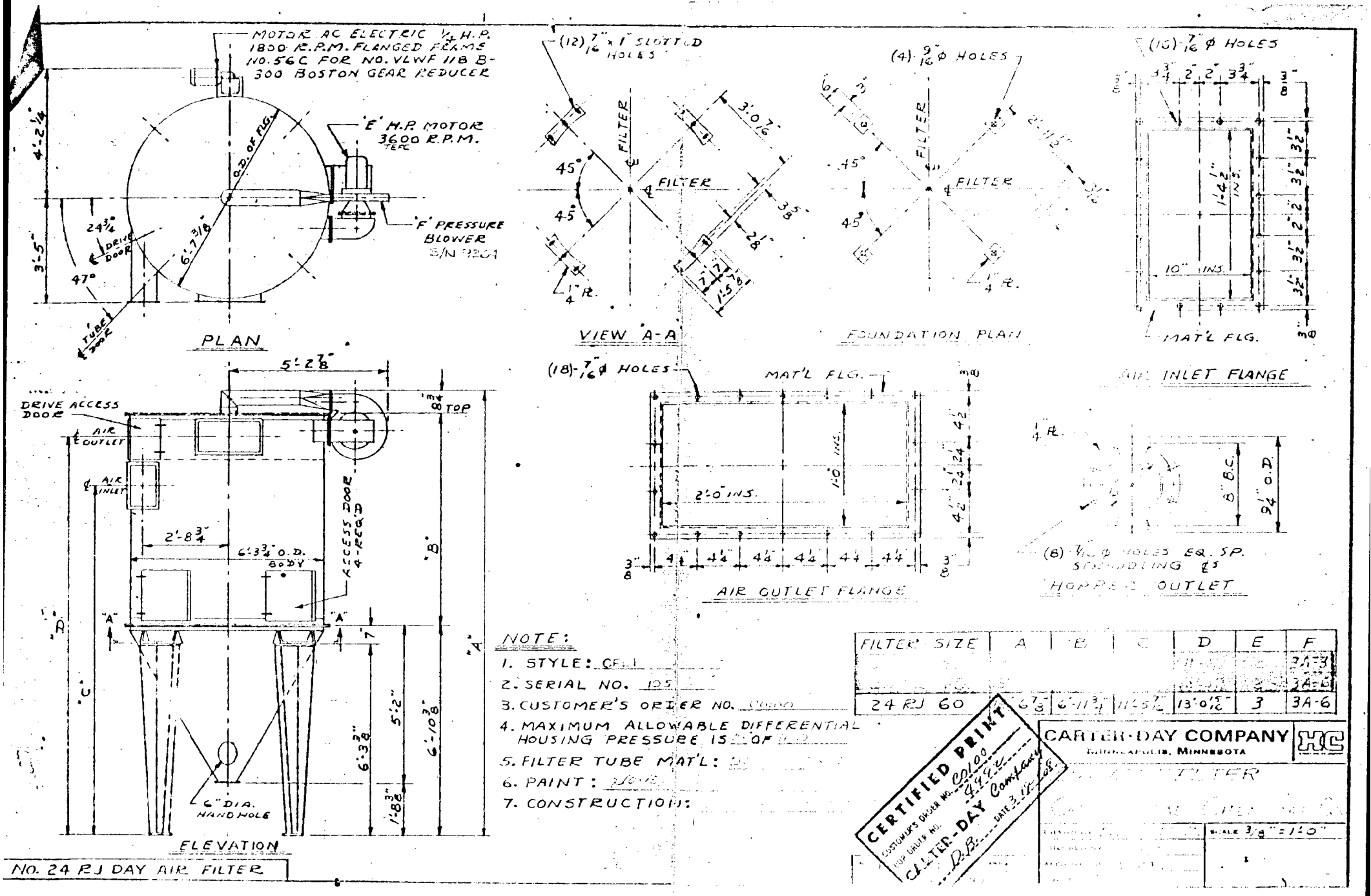

FILTER SIZE	A	B	C	D	E	F
24 RJ 60	6'-7⅞"	6'-11¾"	11'-5½"	13'-0 15/16"	3	3A-6

APPENDIX F

PROJECT PARTICIPANTS

PROJECT PARTICIPANTS

The following Weston employees participated in this project:

Peter J. Marks Laboratory Manager	econENVIRONomics Division
Barry L. Jackson Supervisor, Air Testing	econENVIRONomics Division
Jeffrey D. O'Neill Project Scientist Assistant	econENVIRONomics Division
Gregory Celiano Assistant Project Scientist	econENVIRONomics Division
David D. Maloney Laboratory Technician	econENVIRONomics Division

EVALUATOR Steve Sharpe EVALUATION DATE 9/14/92

B

METHOD 5: SECONDARY EMISSIONS TEST REPORT EVALUATION

STATE: CA FACILITY: Chevron Chem Co. Richmond Ca TEST DATE: Dec/12,13/78

PROCESS(ES) TESTED: Ammonium Sulfate Dryer

SAMPLING DURATION 2
must have at least 3 runs, each ≥ 1 hour duration, with sampling ≥ 2 minutes at each traverse point, and total sampling volume ≥ 30 dscf

Inlet only 2 runs lots of problems with clogging equip.

PRODUCTION RATE 2
is process or production rate during testing representative of normal rates

0.327 lbs part/to AS produced

CONTROL DEVICE(S) 2
are devices described, and their efficiencies given

Venturi Scrubber 99.9%

METHOD 1
are calculations accurate, and is figure provided

METHODS 2,3 3
are data and calculations included for gas velocity, cyclonic flow, and molecular weight determination, and is source of barometric pressure noted

METHOD 4 3
are data and calculations included for moisture content determination, and is moisture content realistic [< saturation]

FIELD DATA is field data on standard forms, and does raw data correspond with printout 3

BOILER TESTS NA
calculation of F_0 from Orsat accurate

SAMPLING TEMPERATURE 3
both probe and filter must be maintained at 248 ± 25°F or other temperature specified in NSPS

BACK-HALF 3
if any, what method was used to catch and recover condensible matter

EQUIPMENT were a borosilicate glass probe liner and a quartz fiber filter used 3

CALIBRATION were both pre- and post-test calibrations performed for

- meter box 2
- pitot tube 2
- temperature sensor 2
- nozzle (3 #) 2

No Doc

LEAK CHECKS both pre- and post-test 3

BLANKS were filter and reagent blanks analyzed, and were any problems addressed 2

No Doc

SAMPLE PREP 3
filter desiccation and tare weights documented

ISOKINETICS within 100±10% for all runs 3

United States
Environmental Protection
Agency

Office of Air Quality
Planning and Standards
Research Triangle Park NC 27711

EMB Report 79-NHF-12
March 1979

Air

EPA

Ammonium Sulfate

Facility D

Emission Test Report
Chevron Chemical
Richmond, California

SET #2632-01-0179

FINAL REPORT

PARTICULATE EMISSIONS FROM AN AMMONIUM SULFATE PLANT CONTROLLED BY A VENTURI SCRUBBER

EPA Contract No. 68-02-2813
Work Assignment No. 26

Prepared for:

Environmental Protection Agency
Emission Measurement Branch
ESED Mail Drop #13
Research Triangle Park, N.C. 27711

May 29, 1979

SCOTT ENVIRONMENTAL TECHNOLOGY, INC.
2600 Cajon Boulevard
San Bernardino, California 92411

Scott Environmental Technology Inc.

TABLE OF CONTENTS

Page Number

1.0 INTRODUCTION..... 1-1
2.0 SUMMARY OF RESULTS..... 2-1
3.0 DISCUSSION OF RESULTS..... 3-1
4.0 PROCESS DESCRIPTION..... 4-1
5.0 SAMPLING AND ANALYTICAL PROCEDURES..... 5-1

APPENDIX A - FIELD DATA SHEETS

1.0 INTRODUCTION

Testing to determine particulate emissions from an ammonium sulfate plant was conducted by Scott Environmental Technology, Inc. for the U.S. Environmental Protection Agency under Contract No. 68-02-2813, Work Assignment No. 26. Three tests were conducted on December 12 and 13, 1978 at the Chevron Chemical Company ammonium sulfate plant located in Richmond, California.

Particulate tests were conducted at the inlet and outlet of a venturi scrubber controlling emissions in the exhaust gases from an ammonium sulfate drier using EPA Method #5. One test to determine particle size distribution was also performed at the inlet to the scrubber using an Andersen 2000 Cascade Impactor. Opacity of the gas exiting from the scrubber was recorded during each test by a smoke reader. Samples of the ammonium sulfate crystals were collected at the inlet and outlet of the drier to determine moisture content. Also, samples of the scrubber liquor were collected downstream from the scrubber.

The test arrangements were made through William Moriarty, Manager of Operations, Manufacturing, with Chevron Chemical Company. Dennis Holzschuh of the EPA was present during the tests as was Marvin Drabkin of Mitre Corporation who monitored the plant process.

2.0 SUMMARY OF RESULTS

The particulate concentration at the outlet of the scrubber ranged from 0.0516 to 0.122 grains/scf and averaged 0.084 grains/scf for the three runs. The average gas flow rate was 4038 dscfm resulting in an average particulate mass flow rate of 3.0 lbs/hour. Inlet particulate concentrations averaged 43.8 grains/scf with an average gas flow rate of 3803 dscfm and particulate mass flow rate of 1424 lbs/hour. The collection efficiency of the scrubber was 99.9% for Test Run No. 2. Complete Method #5 results are summarized in Table 2.1.

The results of the particulate size distribution sample are shown in tabular and graphical form in Table 2.2 and Figure 2.1, respectively.

The average moisture content of the ammonium sulfate crystals was 0.54% at the drier inlet and 0.19% at the drier outlet. Complete results are shown in Table 2.3.

The opacity at the outlet averaged 0% during each test. Results of the opacity readings are summarized in Tables 2.4 through 2.7.

The field data sheets are included in Appendix A.

TABLE 2.1
SUMMARY OF METHOD #5 RESULTS

Chevron Chemical Company
Date: 12/12 & 12/13/78

Location	Inlet			Outlet		
Run No.	2	3	4	1	2	3
Date	12/12	12/13	12/13	12/12	12/12	12/13
Time Started	1540	0850	1330	1245	1705	0902
Time Ended	1730	1100	1420	1504	1921	1124
Barometric Pressure: P_{bar} (in. Hg.)	30.31	30.35	30.35	30.26	30.25	30.35
Static Pressure: P_g (in. H_2O)	-0.05	-0.05	-0.05	1.0	1.0	1.0
Area of Stack: A (ft^2)	2.50	2.50	2.50	1.23	1.23	1.23
Pitot Coefficient: C_p	0.838	0.838	0.838	0.835	0.835	0.835
Meter Calibration Factor: Y	0.94	0.94	0.94	1.075	1.075	1.075
Area of Nozzle: A_n (in^2)	0.0491	0.0491	0.0491	0.035	0.035	0.035
Total Sampling Time: Θ (Min.)	90	90	24.75	128	128	128
Gas Sample Volume: Vm (ft^3)	47.225	42.429	12.390	91.509	87.924	98.371
Avg. Velocity Head: $(\sqrt{\Delta p})^2$avg. (in. H_2O)	0.25	0.20	0.25[1] / 0.30[2]	1.16	1.04	1.30
Avg. Orifice Pressure: ΔH (in H_2O)	0.84	0.70	0.83	1.97	1.76	2.19
Avg. Stack Temperature: T_s (^oR)	638	636	641	574	571	574
Avg. Meter Temperature: T_m (^oR)	550	536	540	537	547	546
Volume of Liquid and Silica Gel Collected: V_{1c} (ml.)	73	56	16	166	151	185
Gas Sample Volume @ Std. Cond.: Vm(Std) (ft^3) = $\frac{17.64\ VmY}{Tm}(P_{bar}+\Delta H/13.6)$	43.242	39.904	11.570	98.252	92.599	104.241
Volume of Water Vapor: Vw (std) (ft^3) = 0.04707 V_{1c}	3.44	2.64	0.753	7.81	7.11	8.71
Moisture Content: $B_{ws} = \frac{Vw(Std)}{Vm(Std) + Vw(Std)}$	0.074	0.062	0.061	0.074	0.071	0.077
Molecular Weight of Stack Gas (dry): M_d = 0.44 (% CO_2) + 0.32 (% O_2) + 0.28 (% N_2+% CO)	28.90	28.90	28.90	28.82	28.86	28.86

[1]Average during sampling. [2]Average in entire duct.

Location	Inlet			Outlet		
Run Number	2	3	4	1	2	3
Molecular Weight of Stack Gas (wet): $M_s = M_d (1-B_{ws}) + 18.0\ B_{ws}$	28.09	28.22	28.24	28.02	28.09	28.02
Stack Pressure: P_s (in. Hg) = $P_{bar} + P_g/13.6$	30.31	30.35	30.35	30.33	30.32	30.42
Stack Gas Velocity: v_s (ft/sec) = $85.49\ C_p\ (\Delta PT_s/P_sM_s)^{1/2}$	31.01	27.61	30.98[1] 33.93[2]	63.19	59.61	66.79
Stack Gas Volume Flow Rate: Q_{sd} (dscfh/min) = $1059\ (1-B_{ws})v_s\ A\ P_s/T_s$	3612	3272[3]	3994[2]	4027	3830	4256
Actual Stack Gas Volume Flow Rate: Q (acfh/min) = $60\ v_s\ A$	4652	4142	5090[2]	4663	4399	4929
Weight of Particulate Collected: m_n (mg.)	127541.4	64757.4	31554.2	502.9	310.1	825.1
Concentration of Particulate @ Std.Cond.(dry): C_s (gr/scf) = $0.01542\ m_n/V_m$ (std) [C_s (g/dscm) = $0.03529\ m_n/V_m$ (std)]	45.48 [104.1	25.02[3] 57.27	42.05 96.24	0.0789 0.181	0.0516 0.118	0.122 0.279]
Mass Flow Rate of Particulate: Q (lb/hr) = $0.008571\ C_s\ Q_{sd}$	1408	701.7[3]	1439	2.7	1.7	4.5
Isokinetic Rate: I (%) = $13.61\ T_s\ V_m$ (std)$/P_s\ v_sA_n\ \Theta\ (1-B_{ws})$	97.6	99.4	94.1	96.5	95.7	96.9
Control Efficiency, %				----	99.9	99.4[3]

[1]Average during sampling.

[2]Average in entire duct.

[3]Not included in average due to leak in sample train.

TABLE 2.2

PARTICLE SIZE DISTRIBUTION

Date:	December 13, 1978	P_{bar} (in. Hg.)	30.35
Location:	Chevron	Stack Temp (^oF)	178
Sampling Location:	Inlet	Sample Time (Min)	2
Traverse Point No. Sampled:	19	Sample Volume (cf)	0.937
		Moisture (% H_2O)	6.1
		Meter Temp (^oF)	76
		Flow Setting, ΔH (in. H_2O)	0.67
		Nozzle Diameter (in.)	0.250

Sample Flow Rate (at stack conditions): 0.50 cfm

Plate No.	Net Wt. (mg)	%	Cumulative %	ECD (Microns)
1	157.3	5.8	100.0	14.73 and larger
2	789.5	29.1	94.2	9.28
3	1271.6	46.8	65.1	6.15
4	413.8	15.2	18.3	4.26
5	71.2	2.6	3.1	2.71
6	13.2	0.5	0.5	1.40
7	0.5	0.0	0.0	0.85
8	0.0	0.0	0.0	0.58
Backup Filter	0.3	0.0	0.0	<0.58
TOTAL	2717.4			

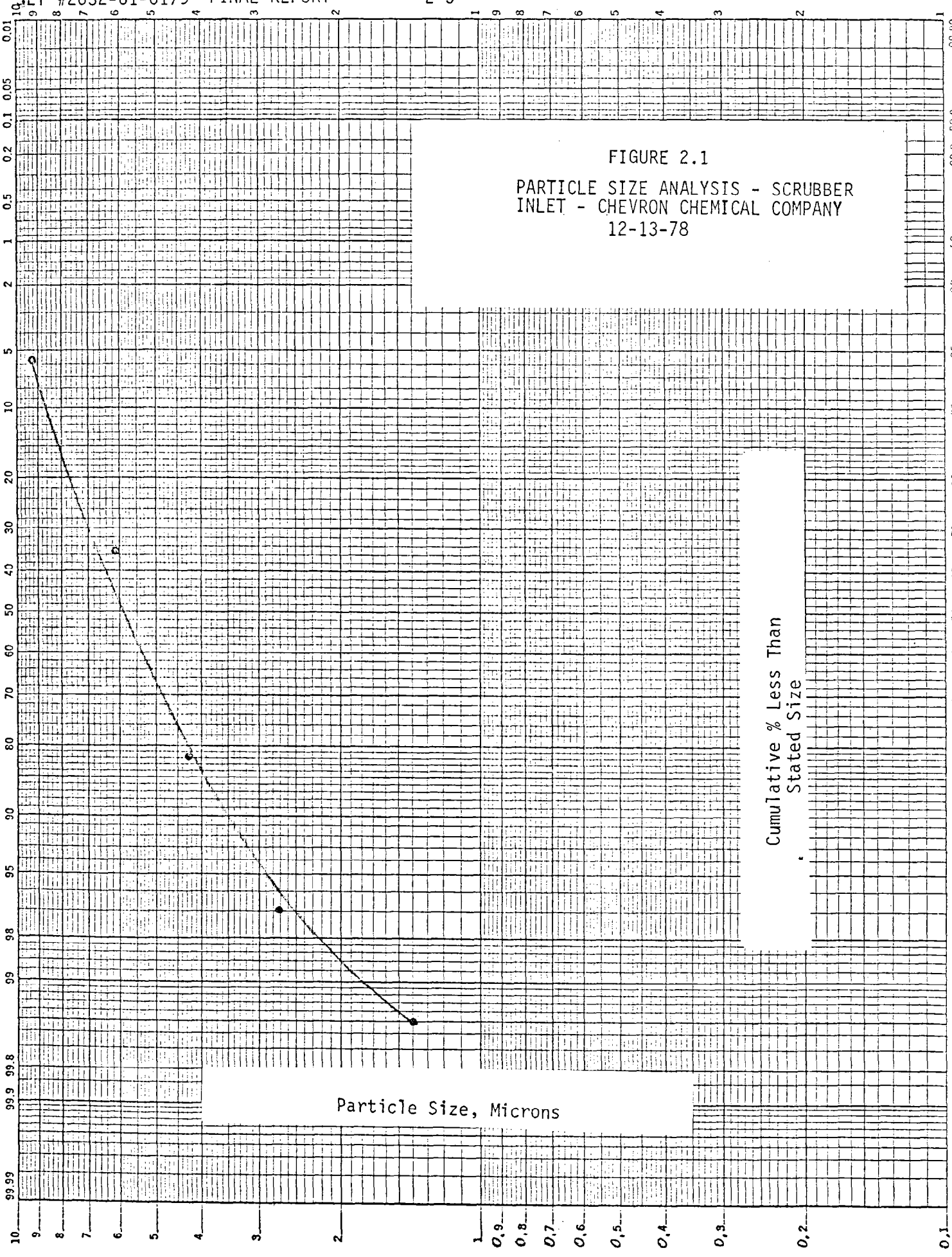

FIGURE 2.1

PARTICLE SIZE ANALYSIS - SCRUBBER INLET - CHEVRON CHEMICAL COMPANY 12-13-78

TABLE 2.3

AMMONIUM SULFATE CRYSTAL
MOISTURE ANALYSIS

Date	Time	Test Run No.	Sample Location	Net Wt. Wet, Gms.	Net Wt. Dry, Gms.	Moisture %
12-12-78	1442	1	Inlet	361.0	358.8	0.61
12-12-78	1440	1	Outlet	344.3	343.7	0.17
12-12-78	1712	2	Inlet	372.1	370.2	0.51
12-12-78	1716	2	Outlet	386.6	385.6	0.26
12-13-78	1119	3	Inlet	409.1	407.0	0.51
12-13-78	1117	3	Outlet	392.3	391.8	0.13

Average at drier inlet - 0.54
Average at drier outlet - 0.19

TABLE 2.4

SUMMARY OF RESULTS OF OPACITY READINGS

Location: Scrubber Outlet

Test Run No.: 1

Date: 12-12-78

Color of Plume: White

Stack Height: 20 feet

Distance to Stack: 150 feet

Wind Direction: South Speed: 0-20 MPH

Sky Description: Gray Clouds - 75%

Note: Readings every 30 seconds; therefore, average opacity = sum/12

Set Number	Time Start	Time End	Opacity Sum	Opacity Average
1	1230	1236	5	0
2	1236	1242	35	5
3	1247	1253	15	0
4	1253	1259	15	0
5	1259	1305	30	0
6	1304	1311	15	0
7	1311	1317	10	0
8	1317	1323	20	0
9	1323	1329	25	0
10	1329	1335	10	0
11	1335	1341	20	0
12	1341	1347	15	0
13	1347	1353	35	5
14	1353	1359	35	5
15	1359	1405	0	0
16	1405	1411	15	0
17	1411	1417	15	0
18	1417	1423	10	0
19	1423	1429	5	0

OVERALL AVERAGE: 0

Set Number	Time Start	Time End	Opacity Sum	Opacity Average

TABLE 2.5

SUMMARY OF RESULTS OF OPACITY READINGS

Location: Scrubber Outlet

Test Run No.: 2

Date: 12-12-78

Color of Plume: White

Stack Height: 20 feet

Distance to Stack: 150 feet

Wind Direction: South Speed: 10-20 MPH

Sky Description: Gray clouds - 75%

Note: Readings taken every 30 seconds; therefore, average opacity = sum/12.

Set Number	Time Start	Time End	Opacity Sum	Opacity Average	Set Number	Time Start	Time End	Opacity Sum	Opacity Average
1	1540	1546	15	0					
2	1546	1552	10	0					
3	1552	1558	5	0					
4	1558	1604	15	0					
5	1604	1610	10	0					
6	1610	1616	10	0					
7	1616	1622	20	0					
8	1622	1628	15	0					
9	1628	1634	10	0					
10	1634	1640	10	0					
11	1640	1646	5	0					
12	1646	1652	5	0					
13	1652	1658	20	0					
14	1658	1704	5	0					
15	1704	1710	5	0					

OVERALL AVERAGE: 0

TABLE 2.6

SUMMARY OF RESULTS OF OPACITY READINGS

Location: Scrubber Outlet

Test Run No.: 3

Date: 12-13-78

Color of Plume: White

Stack Height: 20 feet

Distance to Stack: 150 feet

Wind Direction: South Speed: 0-10 MPH

Sky Description: White Clouds - 50%

Note: Readings taken every 30 seconds; therefore, average opacity = sum/12.

Set Number	Time Start	Time End	Opacity Sum	Opacity Average
1	0848	0854	5	0
2	0854	0900	0	0
3	0900	0906	5	0
4	0906	0912	5	0
5	0912	0918	0	0
6	0918	0924	0	0
7	0924	0930	5	0
8	0930	0936	0	0
9	0936	0942	5	0
10	0942	0948	0	0
11	0948	0954	0	0
12	0954	1000	5	0
13	1000	1006	0	0
14	1006	1012	10	0
15	1012	1018	5	0
16	1018	1024	0	0
17	1024	1030	15	0
18	1030	1036	0	0
19	1036	1042	5	0
20	1042	1048	0	0
21	1048	1054	0	0
22	1054	1100	5	0
23	1100	1106	0	0
24	1106	1112	0	0
25	1155	1201	0	0
26	1201	1207	5	0
27	1207	1213	5	0
28	1213	1219	0	0
29	1219	1225	5	0

OVERALL AVERAGE: 0

TABLE 2.7

SUMMARY OF RESULTS OF OPACITY READINGS

Location: Scrubber Outlet

Test Run No.: 4

Date: 12-13-78

Color of Plume: White

Stack Height: 20 feet

Distance to Stack: 150 feet

Wind Direction: South Speed: 0-15 MPH

Sky Description: Clear

Note: Readings taken every 30 seconds; therefore, average opacity = sum/12.

Set Number	Time Start	Time End	Opacity Sum	Opacity Average	Set Number	Time Start	Time End	Opacity Sum	Opacity Average
1	1437	1443	20	0					
2	1443	1449	20	0					
3	1449	1455	10	0					
4	1455	1501	15	0					

OVERALL AVERAGE: 0

3.0 DISCUSSION OF RESULTS

A 40 inch stack extension was installed on the outlet of the dropout chamber in order to provide the necessary length of straight duct. Due to the cyclonic flow leaving the dropout chamber, it was also necessary to install a flow straightener in the duct.

Run No. 1 at the scrubber inlet was aborted due to a ruptured sample filter. The rupture was apparently caused by pressure surges in the sample train due to clogging of the nozzle and probe by the particulate. Clogging of the nozzle and probe was a problem during each test. During Runs No. 2 and 3, sampling was interrupted several times to clean the nozzle and probe. At the completion of sampling during Run No. 3, a leak was detected in the inlet sample train in a fitting in an umbilical line. Therefore, an additional test run (Number 4) was made at the inlet. Sampling was halted during Run No. 4 after the sampling traverse was completed for the center sample port due to the large amount of particulate collected. A velocity traverse only was performed on the remaining sample points.

Particle size sampling was conducted for only two minutes. However, due to the high concentration of large particles in the gas stream, the first few collecting plates were overloaded with particulate. Using a cyclone pre-separator, perhaps in an out-of-stack configuration, may have improved the sampling. Immediately after the sampling was completed, the collection plates were sealed in individual containers to avoid the loss of any sample. Particulate collected in the sample nozzle and sample head was included as part of Plate No. 1.

4.0 PROCESS DESCRIPTION AND OPERATION

The Chevron Chemical plant is designed to produce 220 TPD of ammonium sulfate (AS) from ammonia and sulfuric acid. All of the AS produced is sold for use as fertilizer. The plant operates continuously 24 hours a day for periods up to 5 to 6 weeks between short periods of maintenance. Varying AS market conditions during the year also affect the length of plant shut-down periods.

A. Process Description

Figure 4.1 shows a simplified diagram of the AS process and the sampling locations. Sulfuric acid (98 percent) and anhydrous ammonia are combined in a reactor or "saturator." The heat of reaction provides the energy for evaporation. As the concentration increases, the AS solution becomes saturated. AS crystals then form and are allowed to grow in size. The crystal slurry is fed to a centrifuge, which separates most of the liquid from the crystals. The wet crystals are then passed through a gas-fired rotary drum dryer, screened, and conveyed to a storage warehouse. A venturi scrubber with a liquid-to-gas ratio of 26 gal/1000 acf and a pressure drop of 13 inches of water is used to control dryer emissions.

B. Process Operation

The purpose of the test program was to measure emission levels from the venturi scrubber controlling dryer emissions. Process conditions were carefully observed, and testing was performed only during periods when the plant production rate was normal. During the tests, pertinent operating

conditions were monitored and recorded on process data sheets. These sheets are included in Appendix B.

As shown by Table 1 of Appendix B, the plant operated at a production rate very near the design capacity of 220 TPD during the emission tests. No calibrated weigh belts were used. The ammonium sulfate production rate was calculated from both the sulfuric acid and ammonia flow rates. According to plant personnel, the sulfuric acid flow rate is a more accurate basis for computing the production rate than the ammonia flow rate. The accuracy of the AS production rate based on acid flow is estimated to be within ± 5 percent.

The following parameters were monitored during the tests to verify that the dryer was operating normally:

1. Sulfuric acid flow rate
2. Ammonia flow rate
3. AS product weigh belt reading (uncalibrated)
4. Dryer operating temperatures
5. Centrifuge amperage
6. Crystallizer liquor level, temperature, vacuum
7. Percent free acid in crystallizer elutriation leg
8. AS slurry surge tank level
9. AS specific gravity of slurry

Process monitoring began approximately 1 hour before the start of emission Test Number 1 on the morning of December 12, 1978. Actual emission testing began at 12:45 p.m. for the scrubber inlet and 1:40 p.m.

for the scrubber outlet. The scrubber inlet test terminated at 3:00 p.m. (120 minutes net); the outlet test ended at 4:10 p.m. (120 minutes net). The process operation appeared to operate at steady state without interruption during this period.

Monitoring for Test Number 2 began at 3:30 p.m. (scrubber inlet) and 4:54 p.m. (scrubber outlet). In this run, the scrubber inlet test terminated at 5:15 p.m., and the outlet test ended at 7:18 p.m.

Approximately half-way through the second test, it became apparent from the weigh belt readings that the AS production rate had dropped off significantly (even though sulfuric acid and ammonia flows remained constant). According to plant personnel, the flow of oxalic acid (a crystal growth promoter) to the crystallizer had been stopped, and the percentage of fines in the AS slurry leaving this unit had increased. In order to decrease the fines percentage in the product, the hold-up time in the crystallizer was increased by reducing the AS slurry flow to the centrifuge. This resulted in about a 10 to 15 percent drop in the rate of AS passing through the dryer during a brief portion of the test period. This drop in AS dryer throughput is not believed to have significantly affected the test results.

Test Number 3 began at 9:00 a.m. (scrubber outlet) and ended at 11:15 a.m. (scrubber outlet) on December 13, 1978. The scrubber inlet portion of the test was aborted due to problems of continual AS blockage in the equipment. It was decided that the 2 scrubber inlet tests completed on December 12 were adequate. A particle size distribution test

was done at the scrubber inlet, however. The AS production rate was normal during the test period although the AS crystal size distribution had not completely returned to normal.

FIGURE 4.1 - SCHEMATIC DIAGRAM OF AMMONIUM SULFATE PLANT - CHEVRON CHEMICAL COMPANY, RICHMOND, CA.

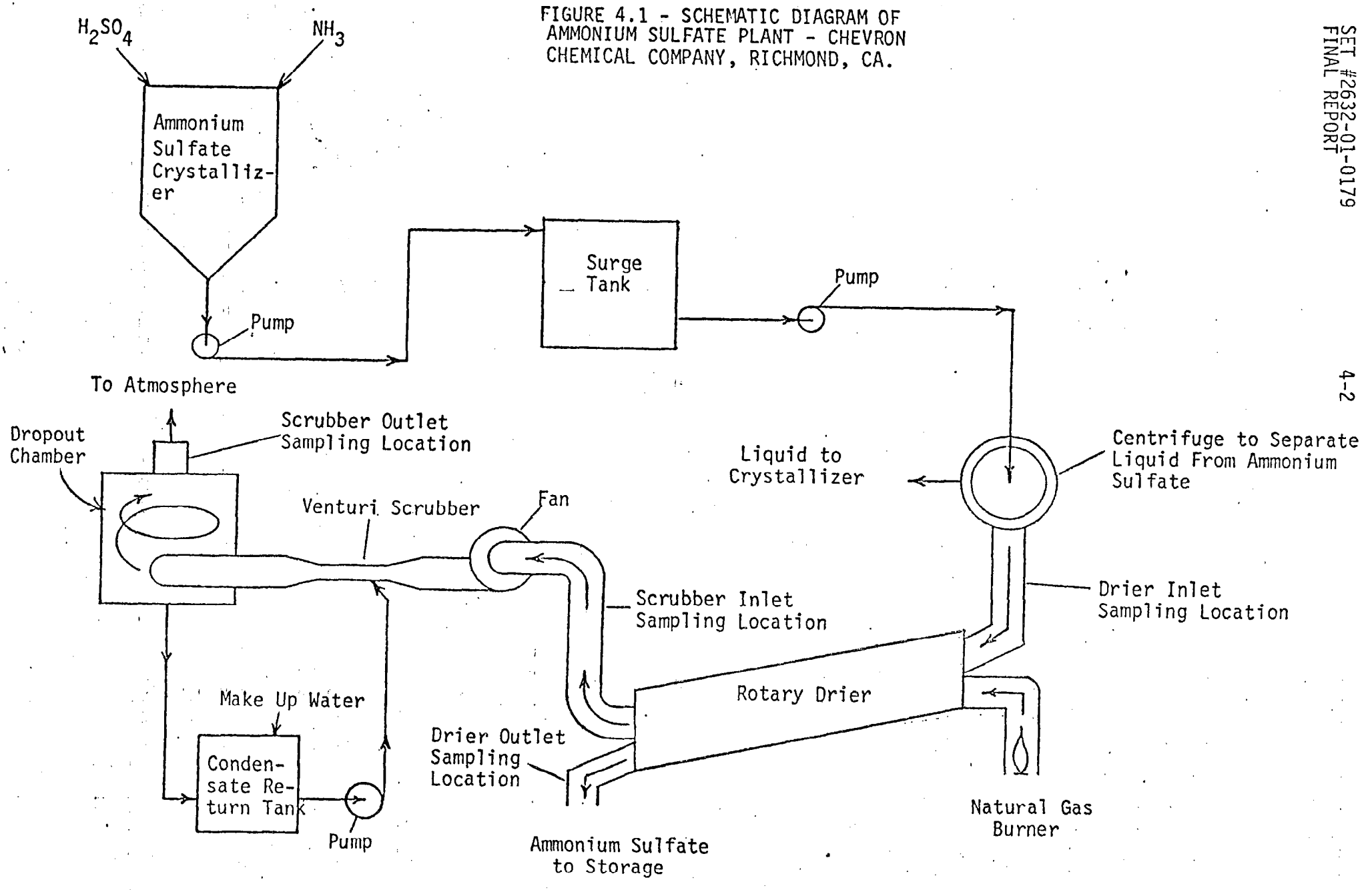

5.0 SAMPLING AND ANALYTICAL PROCEDURES

Gas sampling for total particulate content was conducted at the inlet and outlet of the scrubber in accordance with EPA Reference Method #5. This method involves the isokinetic extraction of a sample from the gas stream and collection of the particulate on a heated out-of-stack filter. A dry gas meter measures the volume of the gas sample. The gas velocity in the duct is measured during the sampling with a Pitot tube and inclined manometer. The stack gas temperature is measured with a chromel-alumel thermocouple. The quantity of particulate collected is determined gravimetrically with results reported as grains of particulate per standard cubic foot of gas and grams per cubic meter.

The sample for particle size distribution was collected using an Andersen 2000 In-Stack Cascade Impactor. The particles are collected by impaction on a series of plates. The plates have increasingly smaller holes so that the velocity of the particles is increased from plate to plate and smaller and smaller particles are impacted. The particulate weight collected on each plate is determined gravimetrically. The particle size distribution is based on the equivalent aerodynamic size of the particles based on spherical particles of 1 gram/cc density.

Opacity readings of the scrubber outlet gases were made in accordance with EPA Method #9. The moisture content of the ammonium sulfate samples from the drier inlet and outlet was determined by weighing the samples before and after drying.

APPENDIX A

FIELD DATA SHEETS

PROJECT NUMBER _____ TEST NUMBER _____ FIELD DATA SHEET

SCOTT ENVIRONMENTAL TECHNOLOGY, INC.

PLANT CHEVRON ORTHO – RICHMOND
DATE 12-12-78
SAMPLING LOCATION OUTLET
SAMPLE TYPE METHOD 5
RUN NUMBER OUTLET #1
OPERATORS JR, JP
AMBIENT TEMPERATURE
BAROMETER 30.26

PROBE LENGTH & TYPE 2' GLASS
NOZZLE I.D. .210
SAMPLE BOX NUMBER GREEN
METER BOX NUMBER SAN "B" ∂= 1.015
PROBE HEATER SETTING VARIAC 11
FILTER HEATER SETTING 250
REFERENCE ΔP .90
READ AND RECORD ALL DATA EVERY 4 MINUTES
START TIME 1045

FYRITE ANALYSIS
CO_2 O_2

SAMPLE ORDER

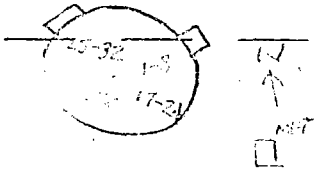

TRAVERSE POINT NUMBER	CLOCK TIME SAMPLING TIME, min	CLOCK TIME (24-hr CLOCK)	GAS METER READING (V_m), ft^3 INITIAL: 267.445	VELOCITY HEAD (Δp_s), in. H_2O	ORIFICE PRESSURE DIFFERENTIAL (ΔH), in. H_2O DESIRED	ACTUAL	STACK TEMPERATURE (T_s), °F	DRY GAS METER TEMPERATURE INLET ($T_{m\ in}$), °F	OUTLET ($T_{m\ out}$), °F	PUMP VACUUM, in. Hg	IMPINGER TEMPERATURE, °F	COMMENTS
												PRELIMINARY LEAK CHECK IS TIGHT.
1	4		270.100	1.2	2.0	2.0	113	62	62	3.2		Box 297 PROBE 111
2	8		272.850	1.05	1.8	1.8	112	68	64	5.2		Box 284 PROBE 177
3	12		275.508	1.05	1.8	1.8	113	74	64	3.0		Box 265 PROBE 155
4	16		278.210	1.1	1.85	1.85	113	76	65	3.0		Box 285 PROBE 165
5	20		280.905	1.05	1.8	1.8	113	78	65	3.8		Box 274 PROBE 156
6	24		283.740	1.2	2.0	2.0	113	80	66	3.5		Box 286 PROBE 167
7	28		286.728	1.3	2.2	2.2	113	82	65	4.0		Box 248 PROBE 144
8	32		289.912	1.5	2.5	2.5	114	84	67	4.2		Box 285 PROBE 168
9	36		292.740	1.1	1.85	1.85	114	85	66	3.5		
10	40		295.610	1.2	2.0	2.0	114	86	68	3.7		BOX THERMOCOUPLE IS OUT PUMP IS OPERATING NICELY
11	44		298.500	1.2	2.0	2.0	115	88	69	3.8		PROBE 177
12	48		301.310	1.1	1.85	1.85	114	89	70	3.7		
13	52		304.130	1.1	1.85	1.85	116	89	70	3.6		
14	56		306.940	1.1	1.85	1.85	114	90	70	3.5		Box 240 PROBE 206
15	60		309.740	1.1	1.85	1.85	114	90	70	3.5		Box 249 PROBE 170
16	4		312.513	1.05	1.8	1.8	115	91	71	3.5		Box 272 PROBE 163
17	8	1400	314.995	1.1	1.85	1.85	116	79	69	3.5		Box 277 PROBE 160
18	12		317.965	1.1	1.85	1.85	117	80	70	3.5		BOX [illegible] PROBE 152
19	16		320.100	1.06	1.85	1.85	115	80	71	3.4		BOX [illegible] PROBE 155

TRAVERSE POINT NUMBER	CLOCK TIME SAMPLING TIME, min	CLOCK TIME (24-hr CLOCK)	GAS METER READING (V_m), ft^3	VELOCITY HEAD (Δp_s), in. H_2O	ORIFICE PRESSURE DIFFERENTIAL DESIRED	ORIFICE PRESSURE DIFFERENTIAL ACTUAL	STACK TEMPERATURE (T_s), °F	DRY GAS METER TEMPERATURE INLET	DRY GAS METER TEMPERATURE OUTLET	PUMP VACUUM, in. Hg	IMPINGER TEMPERATURE, °F	COMMENTS
20	20		—	1.1	1.85	1.85	114	84	70	3.5		BOX 255 PROBE 149
21	24		326.180	1.1	1.85	1.85	114	85	70	3.5		BOX 286 PROBE 147
22	28		328.990	1.1	1.85	1.85	114	89	71	3.5		
23	32		331.800	1.1	1.85	1.85	114	90	70	3.5		BOX 289 PROBE 147
24	36		334.880	1.3	2.25	2.25	114	90	72	4.0		BOX 301 PROBE 147
25	40		337.995	1.4	2.35	2.35	113	90	70	4.0		
26	44		341.420	1.3	2.25	2.25	112	90	71	4.0		BOX 262 PROBE 160
27	48		344.550	1.3	2.25	2.25	113	91	71	4.0		BOX 300 PROBE 158
28	52		347.665	1.3	2.25	2.25	112	92	71	4.0		BOX 289 PROBE 161
29	56		350.710	1.2	2.05	2.05	113	93	72	3.8		BOX 305 PROBE 160
30	60		353.605	1.1	1.85	1.85	113	94	74	3.8		BOX 263 PROBE 164
31	64		356.450	1.1	1.85	1.85	113	93	74	3.8		
32	68		358.952	1.2	2.05	2.05	112	92	72	3.8		BOX PROBE 160
												STOP 1504
			91.509 ✓	1.07		1.97 ✓	114		77			FINAL LEAK CHECK IS TIGHT
				1.14			574		557 ✓			
				1.16								

TRAVERSE POINT LOCATION & VELOCITY DATA BY

TRAVERSE POINT NUMBER	A=FRACTION OF I.D.	B=AxI.D. ID=	C=B+NIPPLE NIPPLE=	VELOCITY HEAD (Δp_s), in.H_2O	STACK TEMPERATURE (T_s), °F
1					
2					
3					
4					
5					
6					
7					
8					
9					
10					
11					
12					
13					
14					
15					
16					
17				1.1	114
18				1.05	113
19				1.05	113
20				.98	113
21				.98	113
22				1.1	113
23				1.3	113
24				1.5	113
25				1.5	113
26				1.5	113
27				1.3	113
28				1.2	113
29				1.1	114
30				1.1	114
31				1.2	114
32				1.2	114
33					
34					
35					
36					
37					
38					
39					
40					
41					
42					
43					
44					
45					
46					
47					
48					
AVERAGE					

DIAGRAM OF STACK, PORTS, & TRAVERSE POINTS (indicate direction of flow)

INSIDE DIMENSIONS OF SAMPLE PLANE

15" CIRCULAR

STACK GAUGE PRESSURE in. H_2O (+) 1.0

NEAREST UPSTREAM DISTURBANCE

NEAREST DOWNSTREAM DISTURBANCE

PROCESS & CONTROL EQUIPMENT DESCRIPTION

SCOTT ENVIRONMENTAL TECHNOLOGY, INC.

MOISTURE

IMPINGERS
FINAL VOLUME 332 ml
INITIAL VOLUME 200 ml
NET VOLUME 132 ml

SILICA GEL
FINAL WEIGHT 501.9 g
INITIAL WEIGHT 468.0 g
NET WEIGHT 33.9 g
TOTAL MOISTURE 166 g

1 — 167
2&3 165

ANALYTICAL DATA BY _____

ACETONE FRONT WASH
FINAL 84.5148 mg
TARE 84.0444 mg
NET 470.4 mg

FILTER NUMBER 1
FINAL .4589 mg
TARE .42604 mg
NET 32.5 mg

FILTER NUMBER 2
FINAL 502.9 total mg
TARE _____ mg
NET _____ mg

FILTER NUMBER 3
FINAL _____ mg
TARE _____ mg
NET _____ mg

CYCLONE
FINAL _____ mg
TARE _____ mg
NET _____ mg
TOTAL FRONT _____ mg

ACETONE BACK WASH
FINAL _____ mg
TARE _____ mg
NET _____ mg

ETHER-CHLOROFORM EXTRACT
FINAL _____ mg
TARE _____ mg
NET _____ mg

WATER EVAPORATION
FINAL _____ mg
TARE _____ mg
NET _____ mg
TOTAL BACK _____ mg

I CERTIFY THAT THE SAMPLES DESCRIBED BY THIS DATA SHEET WERE COLLECTED IN ACCORDANCE WITH METHODS OUTLINED BY

I FURTHER CERTIFY THAT THE SAMPLES WERE IN THE POSSESSION OF, OR SEALED FOR SHIPMENT BY COMMON CARRIER BY, MYSELF UNTIL DELIVERY TO A LABORATORY FOR ANALYSIS.

SIGNED _____ DATE ____

WITNESS _____ DATE _____
I CERTIFY THAT I RECEIVED THE SAMPLES DESCRIBED BY THIS DATA SHEET FROM THE ABOVE NAMED INDIVIDUAL AND ANALYZED THEM IN ACCORDANCE WITH THE ABOVE NAMED PROCEDURE

NOMOGRAPH DATA BY JBP

CALIBRATED PRESSURE DIFFERENTIAL ACROSS ORIFICE, in. H_2O	$\Delta H_@$	1.865
AVERAGE METER TEMPERATURE (AMBIENT + 20°F), °F	$T_{m_{avg.}}$	80
PERCENT MOISTURE IN GAS STREAM BY VOLUME	B_{wo}	10
BAROMETRIC PRESSURE AT METER, in. Hg	P_m	30.26
STATIC PRESSURE IN STACK, in. Hg ($P_m \pm$ (0.073 x STACK GAUGE PRESSURE in in. H_2O))	P_s	+ .69
RATIO OF STATIC PRESSURE TO METER PRESSURE	P_s/P_m	1.02
AVERAGE STACK TEMPERATURE, °F	$T_{s_{avg.}}$	116
AVERAGE VELOCITY HEAD, in. H_2O	$\Delta p_{avg.}$	
MAXIMUM VELOCITY HEAD, in. H_2O	$\Delta p_{max.}$	3.5
C FACTOR	.90	
CALCULATED NOZZLE DIAMETER, in.	.20	
ACTUAL NOZZLE DIAMETER, in.	~~.196~~	.210
REFERENCE Δp, in. H_2O	1.4	1.10

DRY MOLECULAR WEIGHT DETERMINATION BY _____

SAMPLING TIME (24-hr CLOCK) _____
SAMPLING LOCATION _____
SAMPLE TYPE (BAG, INTEGRATED, CONTINUOUS) _____
ANALYTICAL METHOD _____
AMBIENT TEMPERATURE _____

RUN / GAS	1		2		3		AVERAGE NET VOLUME
	ACTUAL READING	NET	ACTUAL READING	NET	ACTUAL READING	NET	
CO_2	100.0	0.0					
O_2 (NET IS ACTUAL O_2 READING MINUS ACTUAL CO_2 READING)	79.6	20.4					
CO (NET IS ACTUAL CO READING MINUS ACTUAL O_2 READING)		79.6					

SCOTT ENVIRONMENTAL TECHNOLOGY, INC

PLANT CHEVRON CHEMICAL, RICHMOND
DATE 12/12/78
SAMPLING LOCATION INLET
SAMPLE TYPE METHOD 5
RUN NUMBER 2
OPERATORS T.S. & W.N.
AMBIENT TEMPERATURE 60 @ 1535
BAROMETER 30.31 @ 1500

PROBE LENGTH & TYPE 4' GLASS
NOZZLE I.D. .250
SAMPLE BOX NUMBER SCOTT SPLIT BOX
METER BOX NUMBER SCOTT #B "A" 1.835
PROBE HEATER SETTING 250°F
FILTER HEATER SETTING 250°F
REFERENCE ΔP .58
READ AND RECORD ALL DATA EVERY 2.5 MINUTES

FYRITE ANALYSIS

CO_2	O_2	

TRAVERSE POINT NUMBER	CLOCK TIME SAMPLING TIME, min	CLOCK TIME (24-hr CLOCK)	GAS METER READING (V_m), ft^3	VELOCITY HEAD (Δp_s), in. H_2O	ORIFICE PRESSURE DIFFERENTIAL (ΔH), in. H_2O DESIRED	ORIFICE PRESSURE DIFFERENTIAL (ΔH), in. H_2O ACTUAL	STACK TEMPERATURE (T_s), °F	DRY GAS METER TEMPERATURE INLET ($T_{m\,in}$), °F	DRY GAS METER TEMPERATURE OUTLET ($T_{m\,out}$), °F	PUMP VACUUM, in. Hg	IMPINGER TEMPERATURE, °F	COMMENTS
	0	1540	INITIAL: 717.275									
1	2.5		718.982	.42	1.35	1.35	176	68	69	3.0		
2	5.0		720.640	.39	1.2	1.2	182	68	69	4.6		
3	7.5		722.278	.37	1.2	1.2	181	73	70	4.6		
4	10.0		723.885	.37	1.2	1.2	177	75	71	4.5		PROBE 270°F
5	12.5		725.502	.35	1.13	1.13	176	79	72	4.5	60°	
6	15.0		726.900	.27	.86	.86	173	83	74	3.5		
7	17.5		728.276	.27	.86	.86	171	85	76	3.5		
8	20.0		729.561	.24	.77	.77	171	88	77	2.5		
9	22.5		730.930	.27	.86	.86	169	89	78	3.5		
10	25		732.320	.31	1.0	1.0	174	91	80	4.0		
11	27.5		734.031	.42	1.35	1.35	176	93	81	5.2		
12	30.0		735.779	.42	1.35	1.35	177	95	82	5.2		
13	32.5		736.691	.14	.46	.46	176	95	83	2.8		
14	35		737.530	.07	.233	.233	177	95	82	1.8		
15	37.5		738.237	.07	.233	.233	177	95	84	1.3		
16	40.0		739.050	.10	.33	.33	176	96	86	2.0		
17	42.5		—	.12	.375	.375	181	98	86	2.5		
18	45.0		741.039	.18	.58	.58	181	98	87	3.0		
19	47.5		742.—	.25	.80	.80	182	98	87	[illegible]		

PORT 2

TRAVERSE POINT NUMBER	CLOCK TIME SAMPLING TIME, min	CLOCK TIME (24-hr CLOCK)	GAS METER READING (V_m), ft^3	VELOCITY HEAD (Δp_s), in. H_2O	ORIFICE PRESSURE DIFFERENTIAL DESIRED	ORIFICE PRESSURE DIFFERENTIAL ACTUAL	STACK TEMPERATURE (T_s), °F	DRY GAS METER TEMPERATURE INLET	DRY GAS METER TEMPERATURE OUTLET	PUMP VACUUM, in. Hg	IMPINGER TEMPERATURE, °F	COMMENTS
20	50.0		743.738	.30	.96	.96	183	99	89	4.2		.548
21	52.5		745.200	.34	1.1	1.1	185	100	90	4.5	55	.573
22	55		746.802	.20	.96	.96	186	102	90	4.0		.548
23	57.5		748.351	.37	1.18	1.18	186	103	91	4.7		.608
24	60.0		750.107	.43	1.4	1.4	179	104	92	5.5		.656
25	2.5		751.030	.14	.46	.46	172	102	90	2.5		.374
26	5		751.931	.11	.36	.36	174	101	90	2.2		.332
27	7.5		752.864	.11	.36	.36	174	101	90	2.2		.332
28	10		753.720	.10	.33	.33	178	101	91	2.2		.316
29	12.5		754.712	.14	.46	.46	180	101	91	2.7		.374
30	15.0		755.900	.19	.58	.58	180	102	92	3.3		.436
31	17.5		757.136	.30	.96	.96	181	102	92	4.1		.548
32	20.		758.600	.30	.96	.96	180	103	92	4.1		.548
33	22.5		760.050	.30	.96	.96	180	103	93	4.1		.548
34	25		761.460	.28	.90	.90	180	104	93	4.0		.529
35	27.5		763.000	.31	1.0	1.0	180	105	93	4.5		
36	30.0		764.500	.35	1.13	1.13	183	106	94	4.5		
			47.225 ✓	.50 ✓		.84 ✓	178		89.6 ✓			
				.25			638 ✓		550			

TRAVERSE POINT LOCATION & VELOCITY DATA BY _____

TRAVERSE POINT NUMBER	A=FRACTION OF I.D.	B=AxI.D. ID= _____	C=B+NIPPLE NIPPLE= _____	VELOCITY HEAD (Δp_s), in.H_2O	STACK TEMPERATURE (T_s), °F
1					
2					
3					
4					
5					
6					
7					
8					
9					
10					
11					
12					
13					
14					
15					
16					
17					
18					
19					
20					
21					
22					
23					
24					
25					
26					
27					
28					
29					
30					
31					
32					
33					
34					
35					
36					
37					
38					
39					
40					
41					
42					
43					
44					
45					
46					
47					
48					
AVERAGE					

DIAGRAM OF STACK, PORTS, & TRAVERSE POINTS (indicate direction of flow)

INSIDE DIMENSIONS OF SAMPLE PLANE

_____

STACK GAUGE PRESSURE in. H_2O _____

NEAREST UPSTREAM DISTURBANCE _____
NEAREST DOWNSTREAM DISTURBANCE _____

PROCESS & CONTROL EQUIPMENT DESCRIPTION _____

_____

_____

_____

_____

_____

_____

_____

_____

SCOTT ENVIRONMENTAL TECHNOLOGY, INC.

MOISTURE

IMPINGERS
FINAL VOLUME 264 ml
INITIAL VOLUME 200 ml
NET VOLUME 64 ml

SILICA GEL
FINAL WEIGHT 475.9 g
INITIAL WEIGHT 467.1 g
NET WEIGHT 8.8 g
TOTAL MOISTURE 73 g

ANALYTICAL DATA BY _____

ACETONE FRONT WASH

FINAL 155.9637 146.3640 mg
TARE 86.0916 89.0234 mg
NET 69882.1 57338.6 mg

FILTER NUMBER 1

FINAL .7055 mg
TARE .3848 mg
NET .3207 mg

FILTER NUMBER 2

FINAL 1275411.4 total mg
TARE _____ mg
NET _____ mg

FILTER NUMBER 3

FINAL _____ mg
TARE _____ mg
NET _____ mg

CYCLONE

FINAL _____ mg
TARE _____ mg
NET _____ mg

TOTAL FRONT _____ mg

ACETONE BACK WASH

FINAL _____ mg
TARE _____ mg
NET _____ mg

ETHER-CHLOROFORM EXTRACT

FINAL _____ mg
TARE _____ mg
NET _____ mg

WATER EVAPORATION

FINAL _____ mg
TARE _____ mg
NET _____ mg

TOTAL BACK _____ mg

I CERTIFY THAT THE SAMPLES DESCRIBED BY THIS DATA SHEET WERE COLLECTED IN ACCORDANCE WITH METHODS OUTLINED BY

_____

I FURTHER CERTIFY THAT THE SAMPLES WERE IN THE POSSESSION OF, OR SEALED FOR SHIPMENT BY COMMON CARRIER BY, MYSELF UNTIL DELIVERY TO A LABORATORY FOR ANALYSIS.

SIGNED _____ DATE ____

WITNESS _____ DATE ____

I CERTIFY THAT I RECEIVED THE SAMPLES DESCRIBED BY THIS DATA SHEET FROM THE ABOVE NAMED INDIVIDUAL AND ANALYZED THEM IN ACCORDANCE WITH THE ABOVE NA[illegible] OCEDU[illegible]

NOMOGRAPH DATA BY _____

CALIBRATED PRESSURE DIFFERENTIAL ACROSS ORIFICE, in. H_2O	$\Delta H_@$	
AVERAGE METER TEMPERATURE (AMBIENT + 20°F), °F	$T_{m_{avg.}}$	
PERCENT MOISTURE IN GAS STREAM BY VOLUME	B_{wo}	
BAROMETRIC PRESSURE AT METER, in. Hg	P_m	
STATIC PRESSURE IN STACK, in. Hg $P_m \pm (0.073 \times$ STACK GAUGE PRESSURE in in. $H_2O)$	P_s	
RATIO OF STATIC PRESSURE TO METER PRESSURE	P_s/P_m	
AVERAGE STACK TEMPERATURE, °F	$T_{s_{avg.}}$	
AVERAGE VELOCITY HEAD, in. H_2O	$\Delta p_{avg.}$	
MAXIMUM VELOCITY HEAD, in. H_2O	$\Delta p_{max.}$	
C FACTOR		
CALCULATED NOZZLE DIAMETER, in.		
ACTUAL NOZZLE DIAMETER, in.		
REFERENCE Δp, in. H_2O		

DRY MOLECULAR WEIGHT DETERMINATION BY _____

SAMPLING TIME (24-hr CLOCK) _____
SAMPLING LOCATION _____
SAMPLE TYPE (BAG, INTEGRATED, CONTINUOUS) _____
ANALYTICAL METHOD _____
AMBIENT TEMPERATURE _____

RUN / GAS	1		2		3		AVERAGE NET VOLUME
	ACTUAL READING	NET	ACTUAL READING	NET	ACTUAL READING	NET	
CO_2	99.6	0.4					
O_2 (NET IS ACTUAL O_2 READING MINUS ACTUAL CO_2 READING)	78.6	21.0					
CO (NET IS ACTUAL CO READING MINUS ACTUAL O_2 READING)		78.6					

FIELD DATA SHEET — TEST NUMBER _____ — FIELD DATA SHEET

SCOTT ENVIRONMENTAL TECHNOLOGY, INC.

PLANT CHEVRON ORTHO — RICHMOND
DATE 12-12-78
SAMPLING LOCATION OUTLET AMMONIUM SULFATE PLANT VENTURI SCRUBBER
SAMPLE TYPE METHOD 5
RUN NUMBER OUTLET #2
OPERATORS JP — JR
AMBIENT TEMPERATURE 56 @ 1645
BAROMETER 30.25

PROBE LENGTH & TYPE 2' GLASS
NOZZLE I.D. .210
SAMPLE BOX NUMBER
METER BOX NUMBER 6 SAN "B" 1.865
PROBE HEATER SETTING
FILTER HEATER SETTING
REFERENCE ΔP 1.10
READ AND RECORD ALL DATA EVERY 4 MINUTES
START TIME 1705

FYRITE ANALYSIS

	CO_2	O_2

LEAK CHECK: .1 FTS IN 22 SEC @ 15"
OLEAK @ 10"
OK

TRAVERSE POINT NUMBER	CLOCK TIME SAMPLING TIME, min	CLOCK TIME (24 hr CLOCK)	GAS METER READING (V_m), ft^3	VELOCITY HEAD (Δp_s), in. H_2O	ORIFICE PRESSURE DIFFERENTIAL (ΔH), in. H_2O DESIRED	ORIFICE PRESSURE DIFFERENTIAL (ΔH), in. H_2O ACTUAL	STACK TEMPERATURE (T_s), °F	DRY GAS METER TEMPERATURE INLET ($T_{m\,in}$), °F	DRY GAS METER TEMPERATURE OUTLET ($T_{m\,out}$), °F	PUMP VACUUM, in. Hg	IMPINGER TEMPERATURE, °F	COMMENTS
			INITIAL: 359.163									
1	4		361.330	.58	1.0	1.0	111	62	60	2.0		PROBE ONE BAD
2	8		363.355	.57	.98	.98	111	65	63	2.0		PROBE 162
3	12		365.310	.53	.90	.90	111	70	65	2.0		PROBE 157
4	16		367.250	.53	.90	.90	111	70	65	4.0		[illegible]
5	20		369.350	.68	1.11	1.2	112	78	65	2.3		PROBE 157
6	24		371.577	.65	1.08	1.1	113	80	67	2.1		[illegible]
7	28		373.930	.71	1.23	1.23	111	85	78	2.3		PROBE 153 2ND 15 OK
8	32		376.235	.91	1.55	1.55	111	88	70	2.8		PROBE 159
9	36		378.680	.79	1.35	1.35	112	92	72	2.7		
10	40		381.510	1.3	2.2	2.2	112	95	75	4.0		BOX 296 PROBE 157
11	44		384.580	1.3	2.2	2.2	112	97	75	4.0		BOX 290 PROBE 156
12	48		387.480	1.1	1.85	1.85	112	100	75	3.5		BOX 290 PROBE 155
13	52		390.333	1.05	1.80	1.80	112	100	75	3.5		[illegible]
14	56		393.120	.98	1.73	1.73	113	100	77	3.3		BOX 297 PROBE 157
15	60		395.948	1.05	1.80	1.80	112	102	78	3.4		BOX 215 PROBE 157
16	64		398.590	.88	1.53	1.53	112	104	80	3.7		[illegible]
17	8	1817	401.205	1.2	2.0	2.0	112	93	76	3.3		BOX TO OUT MAIN
18	12		403.995	1.05	1.80	1.80	112	94	78	[illegible]		PROBE 156
19	16		406.[illegible]	[illegible]	[illegible]	[illegible]	112	[illegible]	[illegible]	[illegible]		[illegible]

TRAVERSE POINT NUMBER	CLOCK TIME SAMPLING TIME, min	CLOCK TIME (24-hr CLOCK)	GAS METER READING (V_m), ft^3	VELOCITY HEAD (Δp_s), in. H_2O	ORIFICE PRESSURE DIFFERENTIAL DESIRED	ORIFICE PRESSURE DIFFERENTIAL ACTUAL	STACK TEMPERATURE (T_s), °F	DRY GAS METER TEMPERATURE INLET	DRY GAS METER TEMPERATURE OUTLET	PUMP VACUUM, in. Hg	IMPINGER TEMPERATURE, °F	COMMENTS
20	20		409.890	1.2	2.0	2.0	111	100	80	3.8		BOX 294 PROBE 153
21	24		412.005	1.4	2.32	2.32	111	102	81	4.2		BOX 271 PROBE 153
22	28		[illegible]	1.5	2.45	2.45	111	104	[illegible]	[illegible]		BOX 295 PROBE 151
23	32		[illegible]	1.5	2.20	2.20	111	[illegible]	84	4.2		
24	36		421.930	1.4	[illegible]	[illegible]	[illegible]	108	[illegible]	[illegible]		BOX 294 PROBE 149
25	40		425.135	1.4	[illegible]	[illegible]	[illegible]	109	85	[illegible]		ZERO OK
26	44		429.[illegible]	1.4	[illegible]	2.22	111	[illegible]	85	4.0		BOX 298 PROBE 151
27	48		432.265	1.3	2.2	2.2	112	110	87	[illegible]		BOX 294 PROBE 151
28	52		435.230	1.1	[illegible]	1.85	111	[illegible]	87	3.5		BOX 299 PROBE 151
29	56		438.168	1.2	2.0	2.0	111	110	89	[illegible]		BOX 294 PROBE 150
30	60		441.248	1.3	2.20	2.2	111	110	90	4.0		BOX 299 PROBE 148
31	64		444.154	1.1	1.85	1.85	111	110	[illegible]	3.7		ZERO [illegible]
32	68		447.087	1.2	2.0	2.0	111	110	80	3.8		BOX 299 PROBE 145
				1.01		1.76	111	98 to 87				
			87.924 ✓	1.04 ✓		1.76 ✓	571		547			

TRAVERSE POINT LOCATION & VELOCITY DATA BY

TRAVERSE POINT NUMBER	A=FRACTION OF I.D.	B=AxI.D. ID=	C=B+NIPPLE NIPPLE=	VELOCITY HEAD (Δp_s), in.H_2O	STACK TEMPERATURE (T_s), °F
1					
2					
3					
4					
5					
6					
7					
8					
9					
10					
11					
12					
13					
14					
15					
16					
17					
18					
19					
20					
21					
22					
23					
24					
25					
26					
27					
28					
29					
30					
31					
32					
33					
34					
35					
36					
37					
38					
39					
40					
41					
42					
43					
44					
45					
46					
47					
48					
AVERAGE					

DIAGRAM OF STACK, PORTS, & TRAVERSE POINTS (indicate direction of flow)

INSIDE DIMENSIONS OF SAMPLE PLANE

STACK GAUGE PRESSURE in. H_2O +1.0

NEAREST UPSTREAM DISTURBANCE

NEAREST DOWNSTREAM DISTURBANCE

PROCESS & CONTROL EQUIPMENT DESCRIPTION

SCOTT ENVIRONMENTAL TECHNOLOGY, INC.

MOISTURE

IMPINGERS
FINAL VOLUME 314 ml
INITIAL VOLUME 200 ml
NET VOLUME 114 ml

SILICA GEL
FINAL WEIGHT 504.4 g
INITIAL WEIGHT 467.7 g
NET WEIGHT 36.7 g
TOTAL MOISTURE 151 g

#1 — 156
2&3 — 178
314

ANALYTICAL DATA BY _____

ACETONE FRONT WASH			ACETONE BACK WASH		
FINAL	91.5812	mg	FINAL		mg
TARE	91.3041	mg	TARE		mg
NET	277.1	mg	NET		mg
FILTER NUMBER 1			**ETHER-CHLOROFORM EXTRACT**		
FINAL	.4358	mg	FINAL		mg
TARE	.4228	~~mg~~ g	TARE		mg
NET	.0330	mg	NET		mg
FILTER NUMBER 2			**WATER EVAPORATION**		
FINAL	310.1 total	mg	FINAL		mg
TARE		mg	TARE		mg
NET		mg	NET		mg
FILTER NUMBER 3			TOTAL BACK		mg
FINAL		mg			
TARE		mg			
NET		mg			
CYCLONE					
FINAL		mg			
TARE		mg			
NET		mg			
TOTAL FRONT		mg			

I CERTIFY THAT THE SAMPLES DESCRIBED BY THIS DATA SHEET WERE COLLECTED IN ACCORDANCE WITH METHODS OUTLINED BY

I FURTHER CERTIFY THAT THE SAMPLES WERE IN THE POSSESSION OF, OR SEALED FOR SHIPMENT BY COMMON CARRIER BY, MYSELF UNTIL DELIVERY TO A LABORATORY FOR ANALYSIS.

SIGNED _____ DATE ____

WITNESS _____ DATE _____

I CERTIFY THAT I RECEIVED THE SAMPLES DESCRIBED BY THIS DATA SHEET FROM THE ABOVE NAMED INDIVIDUAL AND ANALYZED THEM IN ACCORDANCE WITH THE ABOVE

NOMOGRAPH DATA BY JP

CALIBRATED PRESSURE DIFFERENTIAL ACROSS ORIFICE, in. H_2O	$\Delta H_@$	1.865
AVERAGE METER TEMPERATURE (AMBIENT + 20°F), °F	$T_{m_{avg.}}$	80
PERCENT MOISTURE IN GAS STREAM BY VOLUME	B_{wo}	10
BAROMETRIC PRESSURE AT METER, in. Hg	P_m	30.25
STATIC PRESSURE IN STACK, in. Hg $P_m \pm (0.073 \times$ STACK GAUGE PRESSURE in in. $H_2O)$	P_s	+1.00
RATIO OF STATIC PRESSURE TO METER PRESSURE	P_s/P_m	>1
AVERAGE STACK TEMPERATURE, °F	$T_{s_{avg.}}$	116
AVERAGE VELOCITY HEAD, in. H_2O	$\Delta p_{avg.}$	
MAXIMUM VELOCITY HEAD, in. H_2O	$\Delta p_{max.}$	
C FACTOR		.9
CALCULATED NOZZLE DIAMETER, in.		
ACTUAL NOZZLE DIAMETER, in.		
REFERENCE Δp, in. H_2O		1.1

DRY MOLECULAR WEIGHT DETERMINATION BY [illegible]

SAMPLING TIME (24-hr CLOCK) _____
SAMPLING LOCATION [illegible]
SAMPLE TYPE (BAG, INTEGRATED, CONTINUOUS) _____
ANALYTICAL METHOD _____
AMBIENT TEMPERATURE _____

GAS \ RUN	1		2		3		AVERAGE NET VOLUME
	ACTUAL READING	NET	ACTUAL READING	NET	ACTUAL READING	NET	
CO_2	99.8						.2
O_2 (NET IS ACTUAL O_2 READING MINUS ACTUAL CO_2 READING)	79.2						20.6
CO (NET IS ACTUAL CO READING MINUS ACTUAL O_2 READING)						N_2	79.2

PROJECT NUMBER _____ TEST NUMBER ___ FIELD DATA SHEET

SCOTT ENVIRONMENTAL TECHNOLOGY, INC.

PLANT CHEVRON OLEFINS
DATE 12/13/78
SAMPLING LOCATION INLET AFTERBURNER
SAMPLE TYPE METHOD 5
RUN NUMBER 3
OPERATORS T.S.P.N.N
AMBIENT TEMPERATURE 51°F @ 0900
BAROMETER 30.85 @ 0900

PROBE LENGTH & TYPE 6' GLASS
NOZZLE I.D. .250
SAMPLE BOX NUMBER SMART, INST
METER BOX NUMBER [illegible] 1.82 ΔH
PROBE HEATER SETTING 320°F
FILTER HEATER SETTING 250°F
REFERENCE ΔP .53
READ AND RECORD ALL DATA EVERY 2.5 MINUTES

FYRITE ANALYSIS

CO_2	O_2	

TRAVERSE POINT NUMBER	CLOCK TIME SAMPLING TIME, min	CLOCK TIME (24 hr CLOCK)	GAS METER READING (V_m), ft^3	VELOCITY HEAD (Δp_s), in. H_2O	ORIFICE PRESSURE DIFFERENTIAL (ΔH), in. H_2O DESIRED	ORIFICE PRESSURE DIFFERENTIAL (ΔH), in. H_2O ACTUAL	STACK TEMPERATURE (T_s), °F	DRY GAS METER TEMPERATURE INLET $T_{m\,in}$, °F	DRY GAS METER TEMPERATURE OUTLET ($T_{m\,out}$), °F	PUMP VACUUM, in. Hg	IMPINGER TEMPERATURE, °F	COMMENTS
	0	0850	INITIAL: 783.100	—								
1	2.5		783.081	.15	.40	.40	178	71	68	3.5	50	PROBE 320°F
2	5.0		784.258	.23	.73	.73	178	71	68	4.0	50	
3	7.5		785.445	.21	.67	.67	178	72	68	3.5	50	
4	10.0		786.722	.25	.8	.8	178	74	70	4.0	49	
5	12.5		788.110	.30	.85	.85	174	77	71	5.0	49	
6	15.0		789.215	.15	.49	.49	170	78	71	3.5	49	
7	17.5		800.102	.10	.35	.35	168	81	74	2.5	48	
8	20.0		800.874	.09	.27	.27	168	82	74	3.0	48	
9	22.5		801.735	.18	.48	.48	166	83	75	3.0	48	
10	25.0		802.766	.15	.49	.49	168	85	76	3.5	49	
11	27.5		803.900	.20	.65	.65	174	86	77	4.0	49	
12	30.0	31.5 stop 805.323	805.147	.23	.78	.78	175	87	78	4.1	49	stop 805.323
13	32.5		806.225	.09	.10	.10	[illegible]	[illegible]	79	11.0	51	806.121
14	35.0		807.335	.05	.17	.17	174	79	79	1.0	50	Remove 806.852
15	37.5		808.127	.15	.49	.49	178	79	80	2.0	49	[illegible]
16	40.0		808.[illegible]	.10	.33	.33	176	79	79	2.0	50	
17	42.5		810.[illegible]	.10	.32	.32	177	79	78	2.0	50	
18	45.0		811.547	.14	.49	.49	178	79	78	2.0	50	
19	[illegible]		[illegible]									

TRAVERSE POINT NUMBER	CLOCK TIME SAMPLING TIME, min	CLOCK TIME (24-hr CLOCK)	GAS METER READING (V_m), ft^3	VELOCITY HEAD (Δp_s), in. H_2O	ORIFICE PRESSURE DIFFERENTIAL DESIRED	ORIFICE PRESSURE DIFFERENTIAL ACTUAL	STACK TEMPERATURE (T_s), °F	DRY GAS METER TEMPERATURE INLET	DRY GAS METER TEMPERATURE OUTLET	PUMP VACUUM, in. Hg	IMPINGER TEMPERATURE, °F	COMMENTS
20	50.0		814.000	.28	.89	.89	178	80	74	4.5	54	
21	52.5		815.580	.37	1.2	1.2	178	82	76	5.6	54	
22	55.0		817.274	.40	1.3	1.3	178	85	77	6.0	54	
23	57.5		818.950	.38	1.23	1.25	182	88	78	5.8	54	
24	60.0		820.803	.38	1.22	1.25	184	90	79	5.8	54	15 see over
25	2.5		822.000	.13	.43	.43	171	70	70	3.0	60	PROBE [illegible] AGAIN (1) CLEAN
26	5.0		822.954	.13	.43	.43	171	70	70	3.0	60	Stop 821.129 quan air again 821.[illegible]
27	7.5		823.835	.10	.32	.33	174	72	71	3.5	60	PROBE 220°
28	10.0		824.681	.10	.33	.33	176	74	72	3.5	60	
29	12.5		825.625	.13	.43	.43	179	75	72	3.0	60	
30	15.0		826.783	.23	.73	.73	181	78	74	4.0	60	
31	17.5		828.188	.30	.95	.95	183	80	76	4.8	60	
32	20.0		829.745	.35	1.13	1.15	183	82	75	5.6	58	
33	22.5		831.375	.35	1.13	1.15	182	84	76	5.6	58	
34	25.0		833.011	.36	1.15	1.15	181	88	77	5.8	58	
35	27.5		834.682	.38	1.23	1.25	181	90	77	6.0	58	
36	30.0		836.404	.40	1.3	1.3	183	92	79	6.2	58	
	90 min		42.338	.45 ✓		.70 ✓	176 ✓	70.4 ✓				
				.20 ✓			636	536				
			42.429 ✓									

Leak rate @ end of test

Vac.	ΔH	Rate, cfm	
6.2	.61	.10 /	11.9 sec.
			13.1
			11.9
			12.5
10	1.0	.10 /	9.8 sec.
			9.5 sec.
			10.1
			10.0
15	1.35	.10/	7.5 sec.
5	.46	.10/	15 sec
			15 sec
			15.6 sec
3	.20	.10/	22.9
			20.9
			22.7
			21.2

TRAVERSE POINT LOCATION & VELOCITY DATA BY_____

TRAVERSE POINT NUMBER	A=FRACTION OF I.D.	B=AxI.D. ID= _____	C=B+NIPPLE NIPPLE= _____	VELOCITY HEAD (Δp_s), in.H_2O	STACK TEMPERATURE (T_s), °F
1					
2					
3					
4					
5					
6					
7					
8					
9					
10					
11					
12					
13					
14					
15					
16					
17					
18					
19					
20					
21					
22					
23					
24					
25					
26					
27					
28					
29					
30					
31					
32					
33					
34					
35					
36					
37					
38					
39					
40					
41					
42					
43					
44					
45					
46					
47					
48					
AVERAGE					

DIAGRAM OF STACK, PORTS, & TRAVERSE POINTS (indicate direction of flow)

INSIDE DIMENSIONS OF SAMPLE PLANE

_____

STACK GAUGE PRESSURE in. H_2O_____

NEAREST UPSTREAM DISTURBANCE_____
NEAREST DOWNSTREAM DISTURBANCE_____

PROCESS & CONTROL EQUIPMENT DESCRIPTION_____

_____

_____

_____

_____

_____

_____

_____

_____

SCOTT ENVIRONMENTAL TECHNOLOGY, INC.

MOISTURE

IMPINGERS
FINAL VOLUME 241 ml
INITIAL VOLUME 200 ml
NET VOLUME 41 ml

SILICA GEL
FINAL WEIGHT 491.2 g
INITIAL WEIGHT 476.3 g
NET WEIGHT 14.9 g

TOTAL MOISTURE 56 g

IMPINGER
#1 22.5 ml
2 18
3 — A SMALL AMOUNT OF SILICA GEL

ANALYTICAL DATA BY _____

ACETONE FRONT WASH

FINAL [illegible] mg
TARE [illegible] mg
NET [illegible] mg

FILTER NUMBER 1

FINAL .6078 mg
TARE .4251 mg
NET .1827 mg

FILTER NUMBER 2

FINAL [illegible] mg
TARE _____ mg
NET _____ mg

FILTER NUMBER 3

FINAL _____ mg
TARE _____ mg
NET _____ mg

CYCLONE

FINAL _____ mg
TARE _____ mg
NET _____ mg

TOTAL FRONT _____ mg

ACETONE BACK WASH

FINAL _____ mg
TARE _____ mg
NET _____ mg

ETHER-CHLOROFORM EXTRACT

FINAL _____ mg
TARE _____ mg
NET _____ mg

WATER EVAPORATION

FINAL _____ mg
TARE _____ mg
NET _____ mg

TOTAL BACK _____ mg

I CERTIFY THAT THE SAMPLES DESCRIBED BY THIS DATA SHEET WERE COLLECTED IN ACCORDANCE WITH METHODS OUTLINED BY

I FURTHER CERTIFY THAT THE SAMPLES WERE IN THE POSSESSION OF, OR SEALED FOR SHIPMENT BY COMMON CARRIER BY, MYSELF UNTIL DELIVERY TO A LABORATORY FOR ANALYSIS.

SIGNED _____ DATE ____

WITNESS _____ DATE _____

I CERTIFY THAT I RECEIVED THE SAMPLES DESCRIBED BY THIS DATA SHEET FROM THE ABOVE NAMED INDIVIDUAL AND ANALYZED THEM IN ACCORDANCE WITH THE ABOVE

NOMOGRAPH DATA BY _____

CALIBRATED PRESSURE DIFFERENTIAL ACROSS ORIFICE, in. H_2O	$\Delta H_@$	
AVERAGE METER TEMPERATURE (AMBIENT + 20°F), °F	$T_{m_{avg.}}$	
PERCENT MOISTURE IN GAS STREAM BY VOLUME	B_{wo}	
BAROMETRIC PRESSURE AT METER, in. Hg	P_m	
STATIC PRESSURE IN STACK, in. Hg $P_m \pm (0.073 \times$ STACK GAUGE PRESSURE in in. $H_2O)$	P_s	
RATIO OF STATIC PRESSURE TO METER PRESSURE	P_s/P_m	
AVERAGE STACK TEMPERATURE, °F	$T_{s_{avg.}}$	
AVERAGE VELOCITY HEAD, in. H_2O	$\Delta p_{avg.}$	
MAXIMUM VELOCITY HEAD, in. H_2O	$\Delta p_{max.}$	
C FACTOR		
CALCULATED NOZZLE DIAMETER, in.		
ACTUAL NOZZLE DIAMETER, in.		
REFERENCE Δp, in. H_2O		

DRY MOLECULAR WEIGHT DETERMINATION BY _____

SAMPLING TIME (24-hr CLOCK) _____
SAMPLING LOCATION _____
SAMPLE TYPE (BAG, INTEGRATED, CONTINUOUS) _____
ANALYTICAL METHOD _____
AMBIENT TEMPERATURE _____

RUN / GAS	1		2		3		AVERAGE NET VOLUME
	ACTUAL READING	NET	ACTUAL READING	NET	ACTUAL READING	NET	
CO_2							
O_2 (NET IS ACTUAL O_2 READING MINUS ACTUAL CO_2 READING)							
CO (NET IS ACTUAL CO READING MINUS ACTUAL O_2 READING)							

PROJECT NUMBER _____ TEST NUMBER 1 FIELD DATA SHEET

SCOTT ENVIRONMENTAL TECHNOLOGY, INC.

PLANT AMERON OREO RICHMOND
DATE 12-13-78
SAMPLING LOCATION OUTLET
SAMPLE TYPE METHOD 5
RUN NUMBER OUTLET #3
OPERATORS JR, JR
AMBIENT TEMPERATURE
BAROMETER

PROBE LENGTH & TYPE 2' GLASS
NOZZLE I.D. 1210
SAMPLE BOX NUMBER GREEN
METER BOX NUMBER SAN'B" 1.865 Δ=1075
PROBE HEATER SETTING VARIAC @ 11%
FILTER HEATER SETTING 250
REFERENCE ΔP 1.1
READ AND RECORD ALL DATA EVERY 4 MINUTES

START 0902

FYRITE ANALYSIS

	CO_2	O_2

TRAVERSE POINT NUMBER	CLOCK TIME SAMPLING TIME, min	CLOCK TIME (24 hr CLOCK)	GAS METER READING (V_m), ft^3	VELOCITY HEAD (Δp_s), in. H_2O	ORIFICE PRESSURE DIFFERENTIAL (ΔH), in. H_2O DESIRED	ORIFICE PRESSURE DIFFERENTIAL (ΔH), in. H_2O ACTUAL	STACK TEMPERATURE (T_s), °F	DRY GAS METER TEMPERATURE INLET ($T_{m\,in}$), °F	DRY GAS METER TEMPERATURE OUTLET ($T_{m\,out}$), °F	PUMP VACUUM, in. Hg	IMPINGER TEMPERATURE, °F	COMMENTS
			INITIAL: 455.111									
1	4		457.768	1.1	1.85	1.85	114	67	64	6.0		[illegible] PROBE 157
2	8		460.495	1.1	[illegible]	1.85	114	70	[illegible]	[illegible]		[illegible] PROBE 157
3	12		463.210	1.1	1.85	1.85	114	[illegible]	70	6.5		BOX 147 PROBE 157
4	16		465.987	1.1	1.85	1.85	114	85	[illegible]	7.2		BOX 152 PROBE 164
5	20		468.847	1.2	2.0	2.0	115	87	70	8.0		BOX 185 PROBE 164
6	24		471.848	1.2	2.0	2.0	114	93	71	8.0		BOX 183 PROBE 165
7	28		474.656	1.05	1.8	1.8	114	96	74	7.4		BOX 185 PROBE [illegible]
8	32		477.754	1.5	2.5	2.5	113	98	74	10.0		STACK PITOT CLOGGED @ LAST POINT
9	36		481.003	1.5	2.5	2.5	113	100	74	10.0		ZERO OK BOX 183 PROBE 165
10	40		484.206	1.4	2.35	2.35	114	101	74	9.5		BOX 152 PROBE 165
11	44		487.475	1.6	2.65	2.65	113	103	75	10.8		BOX 185 PROBE 165
12	48		490.640	1.3	2.2	2.2	114	105	76	9.2		BOX 143 PROBE 166
13	52		493.775	1.4	2.35	2.35	113	105	78	9.5		BOX 147 PROBE 166
14	56		496.800	1.2	2.0	2.0	113	105	78	8.2		BOX 152 PROBE 165
15	60	OFF	500.892	1.2	2.0	2.0	113	106	79	8.0		BOX 145 PROBE 165
16	61	1008	503.814	1.2	2.0	2.0	114	106	80	8.0		ZERO IS OK
17	8	1020	506.535	1.05	1.8	1.8	115	85	72	7.0		BOX 143 PROBE 182
18	12	START	509.322	1.1	1.85	1.85	115	86	72	7.5		BOX 141 PROBE 165
[illegible]	[illegible]	[illegible]	[illegible]	[illegible]	[illegible]	[illegible]	[illegible]	[illegible]	[illegible]	[illegible]		[illegible]

TRAVERSE POINT NUMBER	CLOCK TIME SAMPLING TIME, min	CLOCK TIME (24-hr CLOCK)	GAS METER READING (V_m), ft^3	VELOCITY HEAD (Δp_s), in. H_2O	ORIFICE PRESSURE DIFFERENTIAL DESIRED	ORIFICE PRESSURE DIFFERENTIAL ACTUAL	STACK TEMPERATURE (T_s), °F	DRY GAS METER TEMPERATURE INLET	DRY GAS METER TEMPERATURE OUTLET	PUMP VACUUM, in. Hg	IMPINGER TEMPERATURE, °F	COMMENTS
20	20		———	1.1	1.85	1.85	115	92	74	7.6		[illegible] CHECK OK
21	24		517.735	1.1	1.85	1.85	115	94	74	7.6		BOX 169 PROBE 156
22	28		520.604	1.2	2.0	2.0	115	96	78	8.0		BOX 187 PROBE 156
23	32		523.630	1.3	2.2	2.2	115	100	76	9.2		BOX 186 PROBE 157
24	36		526.850	1.5	2.5	2.5	114	102	80	10.5		BOX 177 PROBE 157
25	40		530.375	1.9	3.2	3.2	115	105	80	12.2		BOX 165 PROBE 157
26	44		533.982	1.8	2.95	2.95	114	106	80	13.5	400c	SUPERO IS OK
27	48		537.370	1.5	2.5	2.5	114	107	80	10.5		BOX 144 PROBE 133
28	52		540.560	1.3	2.2	2.2	114	107	80	9.5		BOX 150 PROBE 130
29	56		543.788	1.5	2.5	2.5	114	104	78	10.1		BOX 146 PROBE 126
30	60		547.050	1.4	2.35	2.35	113	104	79	10.0		
31	64		550.275	1.4	2.35	2.35	113	104	78	9.9		BOX 178 PROBE 125
32	68		553.482	1.4	2.35	2.35	113	104	78	9.9		BOX 178 PROBE 125
			98.371 ✓	1.13	2.19 ✓		114		86			END TIME 1123
				1.30 ✓					546			final [illegible]
												4 FT³ IN 82 SEC @ 15"
												WITH TRACER GAS
												0 LEAK @ 10"

TRAVERSE POINT LOCATION & VELOCITY DATA BY_____

TRAVERSE POINT NUMBER	A=FRACTION OF I.D.	B=AxI.D. ID=	C=B+NIPPLE NIPPLE=	VELOCITY HEAD (Δp_s), in.H_2O	STACK TEMPERATURE (T_s), °F
1					
2					
3					
4					
5					
6					
7					
8					
9					
10					
11					
12					
13					
14					
15					
16					
17					
18					
19					
20					
21					
22					
23					
24					
25					
26					
27					
28					
29					
30					
31					
32					
33					
34					
35					
36					
37					
38					
39					
40					
41					
42					
43					
44					
45					
46					
47					
48					
AVERAGE					

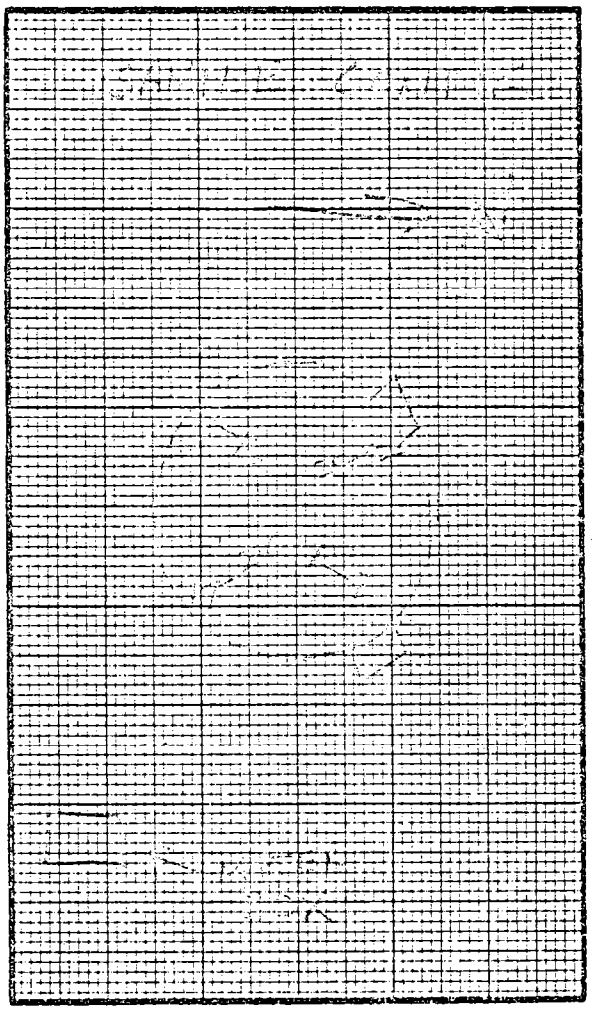

DIAGRAM OF STACK, PORTS, & TRAVERSE POINTS (indicate direction of flow)

INSIDE DIMENSIONS OF SAMPLE PLANE

_____

STACK GAUGE PRESSURE in. H_2O_____

NEAREST UPSTREAM DISTURBANCE_____
NEAREST DOWNSTREAM DISTURBANCE_____

PROCESS & CONTROL EQUIPMENT DESCRIPTION_____

_____
_____
_____
_____
_____
_____
_____
_____

SCOTT ENVIRONMENTAL TECHNOLOGY, INC.

MOISTURE

IMPINGERS
FINAL VOLUME 352 ml
INITIAL VOLUME 200 ml
NET VOLUME 152 ml

#1 — 187
283 — 165
352

SILICA GEL
FINAL WEIGHT 499.6 g
INITIAL WEIGHT [illegible] g
NET WEIGHT 33.0 g
TOTAL MOISTURE 185 g

ANALYTICAL DATA BY _____

ACETONE FRONT WASH
FINAL 90.4474 mg
TARE 89.6571 mg
NET 790.3 mg

FILTER NUMBER 1
FINAL [illegible] mg
TARE 4127.4 mg
NET 348 mg

FILTER NUMBER 2
FINAL 825.1 total mg
TARE _____ mg
NET _____ mg

FILTER NUMBER 3
FINAL _____ mg
TARE _____ mg
NET _____ mg

CYCLONE
FINAL _____ mg
TARE _____ mg
NET _____ mg

TOTAL FRONT _____ mg

ACETONE BACK WASH
FINAL _____ mg
TARE _____ mg
NET _____ mg

ETHER-CHLOROFORM EXTRACT
FINAL _____ mg
TARE _____ mg
NET _____ mg

WATER EVAPORATION
FINAL _____ mg
TARE _____ mg
NET _____ mg

TOTAL BACK _____ mg

I CERTIFY THAT THE SAMPLES DESCRIBED BY THIS DATA SHEET WERE COLLECTED IN ACCORDANCE WITH METHODS OUTLINED BY

I FURTHER CERTIFY THAT THE SAMPLES WERE IN THE POSSESSION OF, OR SEALED FOR SHIPMENT BY COMMON CARRIER BY, MYSELF UNTIL DELIVERY TO A LABORATORY FOR ANALYSIS.

SIGNED _____ DATE ____

WITNESS _____ DATE _____

I CERTIFY THAT I RECEIVED THE SAMPLES DESCRIBED BY THIS DATA SHEET FROM THE ABOVE NAMED INDIVIDUAL AND ANALYZED THEM IN ACCORDANCE WITH THE ABOVE NAMED PROCEDURE.

NOMOGRAPH DATA BY _____

CALIBRATED PRESSURE DIFFERENTIAL ACROSS ORIFICE, in. H_2O	$\Delta H_@$	
AVERAGE METER TEMPERATURE (AMBIENT + 20°F), °F	$T_{m_{avg.}}$	
PERCENT MOISTURE IN GAS STREAM BY VOLUME	B_{wo}	
BAROMETRIC PRESSURE AT METER, in. Hg	P_m	
STATIC PRESSURE IN STACK, in. Hg $P_m \pm (0.073 \times$ STACK GAUGE PRESSURE in in. $H_2O)$	P_s	
RATIO OF STATIC PRESSURE TO METER PRESSURE	P_s/P_m	
AVERAGE STACK TEMPERATURE, °F	$T_{s_{avg.}}$	
AVERAGE VELOCITY HEAD, in. H_2O	$\Delta p_{avg.}$	
MAXIMUM VELOCITY HEAD, in. H_2O	$\Delta p_{max.}$	
C FACTOR		
CALCULATED NOZZLE DIAMETER, in.		
ACTUAL NOZZLE DIAMETER, in.		
REFERENCE Δp, in. H_2O		

DRY MOLECULAR WEIGHT DETERMINATION BY _____

SAMPLING TIME (24-hr CLOCK) _____
SAMPLING LOCATION _____
SAMPLE TYPE (BAG, INTEGRATED, CONTINUOUS) _____
ANALYTICAL METHOD _____
AMBIENT TEMPERATURE _____

RUN / GAS	1		2		3		AVERAGE NET VOLUME
	ACTUAL READING	NET	ACTUAL READING	NET	ACTUAL READING	NET	
CO_2							
O_2 (NET IS ACTUAL O_2 READING MINUS ACTUAL CO_2 READING)							
CO (NET IS ACTUAL CO READING MINUS ACTUAL O_2 READING)							

PROJECT NUMBER _____ TEST NUMBER 4 FIELD DATA SHEET

SCOTT ENVIRONMENTAL TECHNOLOGY, INC.

PLANT CHEVRON ORTHO
DATE 12/15/78
SAMPLING LOCATION INLET METER DRUM
SAMPLE TYPE METHOD 5
RUN NUMBER 4
OPERATORS T.S. & W.N
AMBIENT TEMPERATURE 65 @
BAROMETER

PROBE LENGTH & TYPE 6' GLASS
NOZZLE I.D. .250
SAMPLE BOX NUMBER GRAY BOX
METER BOX NUMBER SCOTT SB "A" 1.82
PROBE HEATER SETTING 250°F
FILTER HEATER SETTING 220°F
REFERENCE ΔP .58
READ AND RECORD ALL DATA EVERY 2 MINUTES

FYRITE ANALYSIS

CO_2	O_2	

TRAVERSE POINT NUMBER	CLOCK TIME SAMPLING TIME, min	CLOCK TIME (24 hr CLOCK)	GAS METER READING (V_m), ft^3 INITIAL: 852.243	VELOCITY HEAD (Δp_s), in. H_2O	ORIFICE PRESSURE DIFFERENTIAL (ΔH), in. H_2O DESIRED	ACTUAL	STACK TEMPERATURE (T_s), °F	DRY GAS METER TEMPERATURE INLET ($T_{m\,in}$), °F	OUTLET ($T_{m\,out}$), °F	PUMP VACUUM, in. Hg	IMPINGER TEMPERATURE, °F	COMMENTS
1	2		—	.20	.65	.65	173	74	73	2.5		
2	4		853.930	.18	.58	.58	173	75	73	2.3		
3	6		854.728	.12	.39	.39	173	75	74	1.9		
4	8		855.450	.12	.39	.39	174	76	75	1.9		
5	10		856.192	.12	.39	.39	174	79	76	1.9		
6	12		856.989	.15	.49	.49	175	80	77	2.2		
7	14		857.958	.24	.77	.77	177	82	77	2.8		
8	16		859.062	.30	.95	.95	178	84	79	3.2		
9	18		860.281	.38	1.2	1.2	177	88	80	4.0		
10	20		861.632	.40	1.28	1.3	179	88	80	4.2		
11	22		863.070	.45	1.43	1.4	182	91	81	4.5		
12	24		864.487	.49	1.57	1.5	184	93	82	4.5		shutdown 24.75 min 864.633
13	26		Traverse only	50.~~46~~	1.43	1.4	180					Nozzle plugged @ Port Pt 1
14	28			.41			182					
15	30		12.244	.35		0.85	182		540			
16	32		12.340	.38			184	177				
17	34			40			183	181				
18	36			.35			184					
				.4[illegible]			1[illegible]					

Port 8

Port 9

TRAVERSE POINT NUMBER	CLOCK TIME SAMPLING TIME, min	CLOCK TIME (24-hr CLOCK)	GAS METER READING (V_m), ft^3	VELOCITY HEAD (Δp_s), in. H_2O	ORIFICE PRESSURE DIFFERENTIAL DESIRED	ORIFICE PRESSURE DIFFERENTIAL ACTUAL	STACK TEMPERATURE (T_s), °F	DRY GAS METER TEMPERATURE INLET	DRY GAS METER TEMPERATURE OUTLET	PUMP VACUUM, in. Hg	IMPINGER TEMPERATURE, °F	COMMENTS
20	40			.44			182					
21	42			.44			183					
22	44			.43			185					
23	46			.42			188					
24	46			.50			188					
25	50			.15			175					
26	52			.12			176					
27	54			.10			176					
28	56			.13			180					
29	58			.20			181					
30	60			.27			182					
31	2			.33			184					
32	4			.38			184					
33	6			.39			185					
34	8			.35			185					
35	10			.34			184					
36	12			40			184					
				.50								
				.25								
				0.25/30								

TRAVERSE POINT LOCATION & VELOCITY DATA BY _____

TRAVERSE POINT NUMBER	A=FRACTION OF I.D.	B=AxI.D. ID= _____	C=B+NIPPLE NIPPLE= _____	VELOCITY HEAD (Δp_s), in.H_2O	STACK TEMPERATURE (T_s), °F
1					
2					
3					
4					
5					
6					
7					
8					
9					
10					
11					
12					
13					
14					
15					
16					
17					
18					
19					
20					
21					
22					
23					
24					
25					
26					
27					
28					
29					
30					
31					
32					
33					
34					
35					
36					
37					
38					
39					
40					
41					
42					
43					
44					
45					
46					
47					
48					
AVERAGE					

DIAGRAM OF STACK, PORTS, & TRAVERSE POINTS (indicate direction of flow)

INSIDE DIMENSIONS OF SAMPLE PLANE

_____

STACK GAUGE PRESSURE in. H_2O _____

NEAREST UPSTREAM DISTURBANCE _____
NEAREST DOWNSTREAM DISTURBANCE _____

PROCESS & CONTROL EQUIPMENT DESCRIPTION _____

_____

_____

_____

_____

_____

_____

_____

_____

SCOTT ENVIRONMENTAL TECHNOLOGY, INC.

MOISTURE

IMPINGERS
FINAL VOLUME 212 ml
INITIAL VOLUME 200 ml
NET VOLUME 12 ml

SILICA GEL
FINAL WEIGHT 471.9 g
INITIAL WEIGHT 467.7 g
NET WEIGHT 4.2 g
TOTAL MOISTURE 16 g

ANALYTICAL DATA BY _____

ACETONE FRONT WASH
FINAL 114.1774 mg
TARE 82.6000 mg
NET 31.5774 mg

FILTER NUMBER 1
FINAL .4567 mg
TARE .4299 mg
NET 26.8 mg

FILTER NUMBER 2
FINAL 31.554.2 total mg
TARE _____ mg
NET _____ mg

FILTER NUMBER 3
FINAL _____ mg
TARE _____ mg
NET _____ mg

CYCLONE
FINAL _____ mg
TARE _____ mg
NET _____ mg

TOTAL FRONT _____ mg

ACETONE BACK WASH
FINAL _____ mg
TARE _____ mg
NET _____ mg

ETHER-CHLOROFORM EXTRACT
FINAL _____ mg
TARE _____ mg
NET _____ mg

WATER EVAPORATION
FINAL _____ mg
TARE _____ mg
NET _____ mg

TOTAL BACK _____ mg

I CERTIFY THAT THE SAMPLES DESCRIBED BY THIS DATA SHEET WERE COLLECTED IN ACCORDANCE WITH METHODS OUTLINED BY

_____

I FURTHER CERTIFY THAT THE SAMPLES WERE IN THE POSSESSION OF, OR SEALED FOR SHIPMENT BY COMMON CARRIER BY, MYSELF UNTIL DELIVERY TO A LABORATORY FOR ANALYSIS.

SIGNED _____ DATE _____

WITNESS _____ DATE _____

I CERTIFY THAT I RECEIVED THE SAMPLES DESCRIBED BY THIS DATA SHEET FROM THE ABOVE NAMED INDIVIDUAL AND ANALYZED THEM IN ACCORDANCE WITH THE ABOVE NAMED PROCEDURE.

NOMOGRAPH DATA BY _____

CALIBRATED PRESSURE DIFFERENTIAL ACROSS ORIFICE, in. H_2O	$\Delta H_@$	
AVERAGE METER TEMPERATURE (AMBIENT + 20°F), °F	$T_{m_{avg.}}$	
PERCENT MOISTURE IN GAS STREAM BY VOLUME	B_{wo}	
BAROMETRIC PRESSURE AT METER, in. Hg	P_m	
STATIC PRESSURE IN STACK, in. Hg $P_m \pm (0.073 \times$ STACK GAUGE PRESSURE in in. $H_2O)$	P_s	
RATIO OF STATIC PRESSURE TO METER PRESSURE	P_s/P_m	
AVERAGE STACK TEMPERATURE, °F	$T_{s_{avg.}}$	
AVERAGE VELOCITY HEAD, in. H_2O	$\Delta p_{avg.}$	
MAXIMUM VELOCITY HEAD, in. H_2O	$\Delta p_{max.}$	
C FACTOR		
CALCULATED NOZZLE DIAMETER, in.		
ACTUAL NOZZLE DIAMETER, in.		
REFERENCE Δp, in. H_2O		

DRY MOLECULAR WEIGHT DETERMINATION BY _____

SAMPLING TIME (24-hr CLOCK) _____
SAMPLING LOCATION _____
SAMPLE TYPE (BAG, INTEGRATED, CONTINUOUS) _____
ANALYTICAL METHOD _____
AMBIENT TEMPERATURE _____

RUN / GAS	1		2		3		AVERAGE NET VOLUME
	ACTUAL READING	NET	ACTUAL READING	NET	ACTUAL READING	NET	
CO_2							
O_2 (NET IS ACTUAL O_2 READING MINUS ACTUAL CO_2 READING)							
CO (NET IS ACTUAL CO READING MINUS ACTUAL O_2 READING)							

CHEVRON ORTHO RICHMOND
ANDERSEN STACK SAMPLER DATA

Date: Dec 13th 1978 Test/Run Number: Chevron Ortho Inlet, Andersen #1

Operator: W/ Nunes Meter Box No. Scott San.B. &ΔHa 1.83 Andersen No. Set 2

Nozzle Size .250

Grain Loading From ¶ 5 _____ gr/dscf Est. Sampling Time 2.5 min.

Sampling Location & Point Number: Outlet/(Inlet) Point 19 (7 of 12 in center port of 3 ports)

Average Velocity Head From ¶2 Traverse, ΔP_s .25 Average Stack Temp. From ¶2 Traverse, T_s 178

Flow Setting From Nomograph, ΔH _____ Reference ΔP .58

	Start	Stop	Elapsed
Time:			2.0 min.

			In	Out	Avg.
Gas Volume:	Final	852.182 cf.	Meter Temp: Final	78	76
	Initial	851.185 cf.	Initial	77	74
	Total	.997 cf. x.94 = .937		155	150

76.25

Stack Velocity Head, ΔP_s .25 Flow Rate, ΔH .67 Stack Temp, T_s 179°F

Moisture From ¶4 (%) ≃ 8.4% Gas Density From ¶3 M_d _____ lb/lb-mole

Corrected Volume _____ dscf Corrected Flow Rate _____ dscf/min

Temperature Correction Factor for Aerodynamic Size of Particles _____
Taken From Andersen Manual, Figure 3

0 Plate	31.1632 Tare (g)	31.1907 Final (g)	TOTAL PLATE & ALUMINUM Net (mg)	Net 7.5 mg. %	Probe & Head Wash Cum. %	ECD (Microns)
1	20.9620	20.9710	.127 *	127.	+ 7.5 + 22.8 = 157.3	
2	21.8752	21.8983	.7895 *	789.5		
3	22.42235	22.4331	1.27155 *	1271.55		
4	15.36675	15.3711	.41385 *	413.85		
5	11.0634	11.0657	.0712 *	71.2		
6	11.21995	11.2215	.01315 *	13.15		
7	11.2990	11.2995	.0005	0.5		
8	22.2182	22.2182	0.0000	0.0		
Back-Up Filter	.18685	.18715	0.0003	0.3		
Probe + Head Wash	88.1506	88.1734	22.8			

* Includes particulate impacted on plate and loose particulate collected on plate and weighed separately in aluminum dish. See next page.

SCOTT ENVIRONMENTAL TECHNOLOGY, INC.

ANDERSEN PARTICLE SIZE ANALYSIS

Total weight for each plate includes particulate impacted on plate and loose particulate collected on plates, but weighed separately in aluminum dishes.

SAMPLE WEIGHTS

CHEVRON ORTHO
RICHMOND

SET 2

	PLATE NO & TARE	AL. DISH TARE	FINAL	SAMPLE WT. (DISH)	+ (PLATE)	TOTAL
0						
1	20.9620	1.3255	1.4435	.118.	.009	.127
2	21.8752	1.3206	2.0870	.7664	.0231	.7895
3	22.42235	1.3240	2.5848	1.2608	.01075	1.27155
4	15.36675	1.3205	1.7300	.4095	.00435	.41385
5	11.0634	1.3108	1.3797	.0689	.0023	.0712
6	11.21995	1.3191	1.3307	.0116	.00155	.01315
7	11.2990				.0005	.0005
8	22.2182				0.0	0.0
9						

Ammonium Sulfate Moisture Analysis

Plant: Chevron Chemical Company

Sample Location	DATE	TIME	Tare wt gms	Total Wt Wet, gms	Total Wt. Dry, gms	Net Wt. Wet, gms	Net Wt Dry, gms
INLET	12/12	1442	268.2	629.2	627.0	361.0	358.8
OUTLET	12/12	1440	267.3	611.6	611.0	344.3	343.7
INLET	12/12	1712	267.9	640.0	638.1	372.1	370.2
OUTLET	12/12	1711	267.9	654.5	653.5	386.6	385.6
INLET	12/13	1119	267.6	676.7	671.6	409.1	407.0
OUTLET	12/13	1117	268.1	660.4	659.9	392.3	391.8

FIGURE 9-1
RECORD OF VISUAL DETERMINATION OF OPACITY

COMPANY CHEVRON ORTHO
LOCATION OUTLET
TEST NUMBER 1
DATE 12/12/78
TYPE FACILITY $(NH_4)_2SO_4$ production
CONTROL DEVICE VENTURI

HOURS OF OBSERVATION
OBSERVER DL
OBSERVER CERTIFICATION DATE 12/11/78
OBSERVER AFFILIATION Scott
POINT OF EMISSIONS
HEIGHT OF DISCHARGE POINT 20'

	Initial			Final
CLOCK TIME				
OBSERVER LOCATION Distance to Discharge	150'			150'
Direction from Discharge	SE			SE
Height of Observation Point	0'			0'
BACKGROUND DESCRIPTION	gray clouds			gray clouds
WEATHER CONDITIONS Wind Direction	out of S			out of S
Wind Speed	0-5			10-20
Ambient Temperature	50			55
SKY CONDITIONS (clear, overcast, % clouds, etc.)	75% clouds			75% clouds
PLUME DESCRIPTION Color	white			white
Distance Visible	50'			50'
OTHER INFORMATION				

SUMMARY OF AVERAGE OPACITY

Set Number	Time Start--End	Opacity Sum	Opacity Average
1	12:30 - 14:30		0%

Readings ranged from 0 to 10 % opacity

The source was/was not in compliance with ____ at the time evaluation was made.

FIGURE 9-2 OBSERVATION RECORD

PAGE 2 OF 3

COMPANY Chevron Ortho
LOCATION Oakland
TEST NUMBER 1
DATE 12/12/72

OBSERVER DK
TYPE FACILITY [illegible]
POINT OF EMISSIONS

2 hr test

Start 12:30 PM

stop 12:42 → start 12:47 →

Hr.	Min.	Seconds 0	15	30	45	STEAM PLUME (check if applicable) Attached	Detached	COMMENTS
	0	0		0		✓		[illegible]
	1	0		0				[illegible]
	2	0		0				[illegible]
	3	0		0				
	4	0		0				
	5	5		0				
	6	5		5				
	7	5		0				
	8	5		5				
	9	0		5				
	10	0		0				
	11	0		5				
	12	0		0				
	13	0		0				
	14	5		0				
	15	0		0				
	16	0		0				
	17	5		0				
	18	5		0				
	19	0		5				
	20	5		0				
	21	0		0				
	22	5		0				
	23	0		0				
	24	0		0				
	25	5		5				
	26	0		5				
	27	0		0				
	28	0		0				
	29	0		5		✓		

FIGURE 9-2 OBSERVATION RECORD (Continued)

PAGE 2 OF 3

COMPANY Chevron Ortho
LOCATION [illegible]
TEST NUMBER 1
DATE [illegible]

OBSERVER DK
TYPE FACILITY
POINT OF EMISSIONS

Hr.	Min.	Seconds 0	15	30	45	STEAM PLUME (check if applicable) Attached	Detached	COMMENTS
	30	0		5		✓		
	31	0		5				
	32	5		0				
	33	0		0				
	34	0		0				
	35	0		5				
	36	0		0				
	37	0		0				
	38	0		0				
	39	0		5				
	40	0		0				
	41	0		0				
	42	5		0				
	43	0		0				
	44	5		5				
	45	5		0				
	46	0		5				
	47	0		5				
	48	0		5				
	49	5		5				
	50	0		5				
	51	0		0				
	52	0		0				
	53	0		0				
	54	0		5				
	55	0		0				
	56	0		0				
	57	5		0				
	58	0		0				
	59	0		0		✓		

[FR Doc.74-26150 Filed 11-11-74;8:45 am]

FIGURE 9-2 OBSERVATION RECORD

COMPANY CHEVRON OP-10
LOCATION OUTLET
TEST NUMBER 1
DATE 12/12/78

OBSERVER DK
TYPE FACILITY
POINT OF EMISSIONS

Hr.	Min.	Seconds 0	15	30	45	STEAM PLUME (check if applicable) Attached	Detached	COMMENTS
	0	5		0				
	1	0		0				
	2	0		0				
	3	0		5				
	4	0		0				
	5	0		0				
	6	5		10				
	7	5		5				
	8	5		0				
	9	0		0				
	10	0		0				
	11	0		0				
	12	0		0				
	13	0		5				
	14	0		0				
	15	0		0				
	16	0		5				
	17	10		10				
	18	5		5				
	19	5		5				
	20	5		10				
	21	5		5				
	22	0		0				
	23	0		0				
	24	5		0				
	25	0		0				
	26	0		0				
	27	0		0				
	28	0		0				
	29	0		0				

FIGURE 9-2 OBSERVATION RECORD (Continued)

COMPANY CHEVRON OP-10
LOCATION
TEST NUMBER
DATE

OBSERVER DK
TYPE FACILITY
POINT OF EMISSIONS

Hr.	Min.	Seconds 0	15	30	45	STEAM PLUME (check if applicable) Attached	Detached	COMMENTS
	30	0		0				
	31	0		5				
	32	0		0				
	33	0		5				
	34	0		0				
	35	5		0				
	36	5		0				
	37	5		0				
	38	5		5				
	39	0		0				
	40	0		0				
	41	5		0				
	42	5		0				
	43	0		0				
	44	0		0				
	45	0		5				
	46	0		5				
	47	0		0				
	48	0		0				
	49	5		0				
	50	0		0				
	51	5		0				
	52	0		0				
	53	0		0				
	54	0		0				
	55	5		0				
	56	0		0				
	57	0		5				
	58	5		0				
	59	0		5				

[FR Doc.74-26150 Filed 11-11-74;8:45 am]

Avg = 0%

FIGURE 9-1
RECORD OF VISUAL DETERMINATION OF OPACITY

COMPANY CHEVRON ORTHO
LOCATION OUTLET
TEST NUMBER 2
DATE 12/12/79
TYPE FACILITY WHA, SO4 production
CONTROL DEVICE Venturi

HOURS OF OBSERVATION
OBSERVER DK
OBSERVER CERTIFICATION DATE 1/1/78
OBSERVER AFFILIATION Scott
POINT OF EMISSIONS
HEIGHT OF DISCHARGE POINT 30'

	Initial			Final
CLOCK TIME				
OBSERVER LOCATION Distance to Discharge	150'			150'
Direction from Discharge	SE			SE
Height of Observation Point	0'			0'
BACKGROUND DESCRIPTION	Few clouds			Few clouds
WEATHER CONDITIONS Wind Direction	[illegible]			[illegible]
Wind Speed	10-20			
Ambient Temperature	55			50
SKY CONDITIONS (clear, overcast, % clouds, etc.)	10% clouds			75% clouds
PLUME DESCRIPTION Color	white			white
Distance Visible	50'			50'
OTHER INFORMATION				

SUMMARY OF AVERAGE OPACITY

Set Number	Time Start--End	Opacity Sum	Opacity Average
2	1540 - 1600		0%

Readings ranged from ____ to ____ % opacity

The source was/was not in compliance with ____ at the time evaluation was made.

FIGURE 9-2 OBSERVATION RECORD

PAGE 2 OF 3

COMPANY CHEVRON ORTHO
LOCATION
TEST NUMBER
DATE 12/12/78

OBSERVER DR
TYPE FACILITY
POINT OF EMISSIONS

Hr.	Min.	Seconds 0	15	30	45	STEAM PLUME (check if applicable) Attached	Detached	COMMENTS
	0	0		0		✓		
	1	0		0				
	2	0		5				
	3	0		0				
	4	5		0				
	5	0		5				
	6	5		0				
	7	0		0				
	8	0		5				
	9	0		0				
	10	0		0				
	11	0		0				
	12	0		0				
	13	0		0				
	14	0		0				
	15	0		0				
	16	0		0				
	17	0		0				
	18	0		0				
	19	0		0				
	20	5		0				
	21	0		0				
	22	0		5				
	23	0		5				
	24	0		5				
	25	0		5				
	26	0		0				
	27	0		0				
	28	0		5				
	29	0		5		✓		

Start 3:40 PM

FIGURE 9-2 OBSERVATION RECORD (Continued)

PAGE 2 OF 3

COMPANY CHEVRON ORTHO
LOCATION
TEST NUMBER
DATE 12/12/78

OBSERVER DR
TYPE FACILITY
POINT OF EMISSIONS

Hr.	Min.	Seconds 0	15	30	45	STEAM PLUME (check if applicable) Attached	Detached	COMMENTS
	30	0		0		✓		
	31	0		0				
	32	0		0				
	33	0		0				
	34	5		0				
	35	0		0				
	36	0		0				
	37	0		5				
	38	0		0				
	39	0		0				
	40	0		0				
	41	0		0				
	42	0		0				
	43	0		0				
	44	0		0				
	45	0		0				
	46	0		0				
	47	0		0				
	48	0		0				
	49	0		0				
	50	0		0				
	51	0		0				
	52	0		0				
	53	5		0				
	54	0		0				
	55	0		0				
	56	0		0				
	57							
	58	0		0				
	59	0		0		✓		

[FR Doc.74-26150 Filed 11-11-74;8:45 am]

FIGURE 9-2 OBSERVATION RECORD

PAGE 3 OF 3

COMPANY CHEVRON ORTHO
LOCATION OUTLET
TEST NUMBER 2
DATE 12/12/78

OBSERVER DK
TYPE FACILITY
POINT OF EMISSIONS

2nd hour

start rinsing outlet

Hr.	Min.	Seconds 0	15	30	45	STEAM PLUME (check if applicable) Attached	Detached	COMMENTS
	0	0		0				
	1	0		0				
	2	0		0				
	3	0		0				
	4	0		0				
	5	0		0				
	6	0		0				
	7	0		0				
	8	0		0				
	9	0		0				
	10	0		0				
	11	0		0				
	12	0		0				
	13	0		0				
	14	0		0				
	15	0		0				
	16	0		0				
	17	0		0				
	18	0		0				
	19	0		0				
	20	0		0				
	21	0		0				
	22	0		0				
	23	0		0				
	24	0		0				
	25	0		0				
	26	0		0				
	27	0		0				
	28	0		0				
	29	0		0				

Avg = 0%

FIGURE 9-2 OBSERVATION RECORD (Continued)

PAGE 3 OF 3

COMPANY CHEVRON ORTHO
LOCATION
TEST NUMBER 2
DATE 12/12/78

OBSERVER DK
TYPE FACILITY
POINT OF EMISSIONS

Hr.	Min.	Seconds 0	15	30	45	STEAM PLUME (check if applicable) Attached	Detached	COMMENTS
	30							
	31							
	32							
	33							
	34							
	35							
	36							
	37							
	38							
	39							
	40							
	41							
	42							
	43							
	44							
	45							
	46							
	47							
	48							
	49							
	50							
	51							
	52							
	53							
	54							
	55							
	56							
	57							
	58							
	59							

[FR Doc.74-26150 Filed 11-11-74;8:45 am]

FIGURE 9-1
RECORD OF VISUAL DETERMINATION OF OPACITY

COMPANY CHEVRON ORTHO
LOCATION OUTLET
TEST NUMBER 3
DATE 12/13/78
TYPE FACILITY [illegible] production
CONTROL DEVICE venturi

HOURS OF OBSERVATION
OBSERVER DK
OBSERVER CERTIFICATION DATE 12/1/78
OBSERVER AFFILIATION [illegible]
POINT OF EMISSIONS
HEIGHT OF DISCHARGE POINT 20'

	Initial			Final
CLOCK TIME				
OBSERVER LOCATION Distance to Discharge	150'			150'
Direction from Discharge	SE			SE
Height of Observation Point	0'			0'
BACKGROUND DESCRIPTION	blue sky [illegible]			blue sky w/clouds
WEATHER CONDITIONS Wind Direction	0-5			0-10
Wind Speed	out of S			out of S
Ambient Temperature	50			55
SKY CONDITIONS (clear, overcast, % clouds, etc.)	50% [illegible]			50% cloud + sun
PLUME DESCRIPTION Color	white			white
Distance Visible	50'			50'
OTHER INFORMATION				

SUMMARY OF AVERAGE OPACITY

Set Number	Time Start--End	Opacity Sum	Opacity Average
			0%

Readings ranged from ____ to ____ % opacity

The source was/was not in compliance with ____ at the time evaluation was made.

FIGURE 9-2 OBSERVATION RECORD

PAGE 1 OF 4

COMPANY Chevron Ortho
LOCATION [illegible]
TEST NUMBER 2
DATE 12/18/70

OBSERVER DK
TYPE FACILITY
POINT OF EMISSIONS

Start 8:48

inlet run (Run 2)

outlet run (Run 3)

Hr.	Min.	Seconds 0	15	30	45	STEAM PLUME (check if applicable) Attached	Detached	COMMENTS
	0	0		0		✓		
	1	0		0				
	2	0		0				
	3	0		0				
	4	0		0				
	5	5		0				
	6	0		0				
	7	0		0				
	8	0		0				
	9	0		0				
	10	0		0				
	11	0		0				
	12	0		0				
	13	0		0				
	14	5		0				
	15	0		0				
	16	0		0				
	17	0		0				
	18	0		0				
	19	0		5				
	20	0		0				
	21	0		0				
	22	0		0				
	23	0		0				
	24	0		0				
	25	0		0				
	26	0		0				
	27	0		0				
	28	0		0				
	29	0		0				

FIGURE 9-2 OBSERVATION RECORD (Continued)

PAGE 2 OF 4

COMPANY Chevron Ortho
LOCATION [illegible]
TEST NUMBER 3
DATE 12/18/70

OBSERVER DK
TYPE FACILITY
POINT OF EMISSIONS

Hr.	Min.	Seconds 0	15	30	45	STEAM PLUME (check if applicable) Attached	Detached	COMMENTS
	30	0		0		✓		
	31	0		0				
	32	0		0				
	33	0		0				
	34	0		0				
	35	0		0				
	36	0		0				
	37	0		0				
	38	0		0				
	39	0		0				
	40	0		0				
	41	0		0				
	42	0		0				
	43	0		0				
	44	0		0				
	45	0		0				
	46	0		0				
	47	0		0				
	48	0		0				
	49	0		0				
	50	0		0				
	51	0		0				
	52	0		0				
	53	0		0				
	54	0		0				
	55	0		0				
	56	0		0				
	57	0		0				
	58	0		0				
	59	0		0				

[FR Doc.74-26150 Filed 11-11-74;8:45 am]

FIGURE 9-2 OBSERVATION RECORD

PAGE 3 OF 4

COMPANY CHEVRON ORTHO
LOCATION OUTLET
TEST NUMBER 2
DATE 12/13/78

OBSERVER DK
TYPE FACILITY
POINT OF EMISSIONS

2nd hour

Hr.	Min.	Seconds 0	15	30	45	STEAM PLUME (check if applicable) Attached	Detached	COMMENTS
	0	0		0		✓		
	1	0		0				
	2	0		0				
	3	0		0				
	4	0		0				
	5	0		0				
	6	0		0				
	7	0		5				
	8	0		0				
	9	0		0				
	10	0		0				
	11	0		0				
	12	0		0				
	13	0		0				
	14	0		0				
	15	0		0				
	16	0		0				
	17	0		0				
	18	0		0				
	19	5		0				
	20	0		0				
	21	0		0				
	22	0		0				
	23	0		0				
	24	0		0				
	25	0		0				
	26	0		0				
	27			0				
	28	0		5				
	29	0		0		✓		

FIGURE 9-2 OBSERVATION RECORD (Continued)

PAGE 3 OF 4

COMPANY CHEVRON ORTHO
LOCATION OUTLET
TEST NUMBER 3
DATE 12/13/78

OBSERVER DK
TYPE FACILITY
POINT OF EMISSIONS

Hr.	Min.	Seconds 0	15	30	45	STEAM PLUME (check if applicable) Attached	Detached	COMMENTS
	30	0		0		✓		
	31	0		0				
	32	0		0				
	33	0		0				
	34	0		0				
	35	0		0				
	36	5		5				
	37	0		0				
	38	0		0				
	39	0		0				
	40	0		0				
	41	0		0				
	42	0		0				
	43	0		0				
	44	0		0				
	45	0		0				
	46	0		0				
	47	0		0				
	48	0		0				
	49	0		0				
	50	0		0				
	51	0		0				
	52	0		0				
	53	0		0				
	54	0		0				
	55	0		0				
	56	0		0				
	57	0		0				
	58	0		0				
	59	0		0				

[FR Doc.74-26150 Filed 11-11-74;8:45 am]

FIGURE 9-2 OBSERVATION RECORD

PAGE 4 OF 4

COMPANY CHEVRON ORTHO
LOCATION [illegible]
TEST NUMBER [illegible]
DATE 12/13/78

OBSERVER DK
TYPE FACILITY $(NH_4)_2SO_4$
POINT OF EMISSIONS

3rd hour

Hr.	Min.	Seconds 0	15	30	45	STEAM PLUME (check if applicable) Attached	Detached	COMMENTS
	0	0		0		✓		
	1	0		0				
	2	0		0				
	3	0		0				
	4	0		0				
	5	0		0				
	6	0		0				
	7	0		0				
	8	0		0				
	9	0		0				
	10	0		5				
	11	0		0				
	12	0		0				
	13	0		0				
	14	0		0				
	15	0		0				
	16	0		0				
	17	0		0				
	18	0		0				
	19	0		0				
	20	0		0				
	21	0		0				
	22	0		0				
	23	0		0				
	24							
	25							
	26							
	27							
	28							
	29							

Stopped out filters inlet clogged

Avg = 0%

FIGURE 9-2 OBSERVATION RECORD (Continued)

PAGE 4 OF 4

COMPANY CHEVRON ORTHO
LOCATION [illegible]
TEST NUMBER [illegible]
DATE 12/13/78

OBSERVER DK
TYPE FACILITY
POINT OF EMISSIONS

Start 11:55AM (to finish interrupted)

Hr.	Min.	Seconds 0	15	30	45	STEAM PLUME (check if applicable) Attached	Detached	COMMENTS
	30	0		0		✓		
	31	0		0				
	32	0		0				
	33	0		0				
	34	0		0				
	35	0		0				
	36	0		0				
	37	0		0				
	38	0		0				
	39	0		0				
	40	0		0				
	41	0		0				
	42	0		0				
	43	0		0				
	44	0		0				
	45	0		0				
	46	0		0				
	47	0		0				
	48	0		0				
	49	0		0				
	50	0		0				
	51	0		0				
	52	0		0				
	53	0		0				
	54	0		0				
	55	0		0				
	56	0		0				
	57	0		0				
	58	0		0				
	59	0		0		✓		

[FR Doc.74-26150 Filed 11-11-74;8:45 am]

FIGURE 9-1
RECORD OF VISUAL DETERMINATION OF OPACITY

COMPANY CHEVRON ORTHO
LOCATION [illegible]
TEST NUMBER 4
DATE 12/9/75
TYPE FACILITY NH3-SO4
CONTROL DEVICE

HOURS OF OBSERVATION
OBSERVER [illegible]
OBSERVER CERTIFICATION DATE 2/1/78
OBSERVER AFFILIATION [illegible]
POINT OF EMISSIONS
HEIGHT OF DISCHARGE POINT 20'

	Initial			Final
CLOCK TIME				
OBSERVER LOCATION Distance to Discharge	150'	—		
Direction from Discharge	SE			
Height of Observation Point	0'			
BACKGROUND DESCRIPTION	clear/blue sky			
WEATHER CONDITIONS Wind Direction	SE			
Wind Speed	0-15			
Ambient Temperature	55			
SKY CONDITIONS (clear, overcast, % clouds, etc.)	clear/blue			
PLUME DESCRIPTION Color	white			
Distance Visible	50'			
OTHER INFORMATION				

SUMMARY OF AVERAGE OPACITY

Set Number	Time Start--End	Opacity Sum	Opacity Average
	1433-1535		0%

Readings ranged from ____ to ____ % opacity

The source was/was not in compliance with ____ at the time evaluation was made.

FIGURE 9-2 OBSERVATION RECORD

PAGE 2 OF 2

COMPANY CHEVRON OIL CO
LOCATION [illegible]
TEST NUMBER 4
DATE [illegible]

OBSERVER DK
TYPE FACILITY [illegible]
POINT OF EMISSIONS

Start 2:37 (INLET RERUN OF #2)

Hr.	Min.	Seconds 0	15	30	45	STEAM PLUME (check if applicable) Attached	Detached	COMMENTS
	0	0		5				[illegible]
	1	0		0				[illegible]
	2	0		0				[illegible]
	3	0		5				[illegible]
	4	0		0				
	5	5		5				
	6	0		5				
	7	0		0				
	8	5		0				
	9	0		5				
	10	5		0				
	11	0		0				
	12	0		0				
	13	5		0				
	14	0		0				
	15	0		5				
	16	5		0				
	17	0		5				
	18	0		0				
	19	5		0				
	20	0		0				
	21	0		0				
	22	0		5				
	23	0		5				
	24	5		0				
	25	0		0				
	26							
	27							
	28							
	29							

Stop (Run 3) →

Avg. = 0%

FIGURE 9-2 OBSERVATION RECORD (Continued)

PAGE 2 OF 2

COMPANY CHEVRON OIL CO
LOCATION [illegible]
TEST NUMBER 4
DATE [illegible]

OBSERVER DK
TYPE FACILITY
POINT OF EMISSIONS

Hr.	Min.	Seconds 0	15	30	45	STEAM PLUME (check if applicable) Attached	Detached	COMMENTS
	30							
	31							
	32							
	33							
	34							
	35							
	36							
	37							
	38							
	39							
	40							
	41							
	42							
	43							
	44							
	45							
	46							
	47							
	48							
	49							
	50							
	51							
	52							
	53							
	54							
	55							
	56							
	57							
	58							
	59							

[FR Doc.74-20150 Filed 11-11-74;8:45 am]

APPENDIX B

FIELD DATA SHEETS

TABLE 1

SUMMARY OF AMMONIUM SULFATE PRODUCTION RATE DATA

	Test No.		
	1	2	3
Average Sulfuric Acid Consumption gpm	15.1	15.1	15
Average Ammonia Consumption Lb/Hr	3950	3900	3850
AS Production Based on Sulfuric Acid Consumption, TPD (gpm x 14.7)	222	222	222
AS Production Based on Ammonia Consumption, TPD (Lb/Hr x .0465)	184	181	177
Nominal Plant AS Capacity, TPD	220	220	220

TABLE 2

PROCESS PARAMETERS MONITORED DURING TEST NO. 1

Elapsed Time, Min	0	30	60	90	120	150
Sulfuric Acid Flow, gpm	15.1	15.3	15.0	15.0	15.0	15.0
Ammonia Flow, Lb/Hr	4000	4000	4000	4000	3900	3900
Centrifuge Amperes	21	21	21	20.5	20.2	20.0
Crystallizer Operation:						
Magma Level (scale reading)	5	5	5	5	5	5
Vacuum, psia	7	7	7	7	7	7
Magma temperature (°F)	143	142	140	136	136	136
AS Slurry Sp. Gr. Leaving Crystallizer (meter)	1.445	1.443	1.442	1.440	1.440	1.440
Percent Free Acid in Crystallizer Elutriation Leg	.285	.257	.190	.190	.100	.119
Rotary Dryer Temperatures:						
Inlet Gas (°F)	515	510	520	500	500	500
Outlet Gas (°F)	187	187	187	185	188	189
AS Product (°F)	185	185	185	184	185	186
Slurry Surge Tank Level, ft.	5.8	5.6	5.6	5.4	5.6	5.8
AS Product Weigh Belt Rate TPH	5.8	5.8	5.8	5.5	5.0	4.3

TABLE 3

PROCESS PARAMETERS MONITORED DURING TEST NO. 2

Elapsed Time, Min	0	30	60	90	120	150	180	210
Sulfuric Acid Flow, gpm	15.0	15.2	15.1	15.1	15.1	15.1	15.1	15.2
Ammonia Flow, Lb/Hr.	3900	3900	3900	3900	3900	3900	3900	4000
Centrifuge Amperes	20.2	19	19	19.5	20	20	20	20
Crystallizer Operation:								
Magma Level (scale reading)	5	5	5	5	5	5	5	5
Vacuum, psia	7	7	7	7	7	7	7	7
Magma Temperature, °F	136	140	143	144	145	146	146	148
AS Slurry Sp. Gr. Leaving Crystallizer (meter)	1.440	1.440	1.440	1.440	1.437	1.443	1.444	1.442
Percent Free Acid in Crystallizer Elutriation Leg	.138	.152	.171	.200	.200	.228	.209	.242
Rotary Dryer Temperatures:								
Inlet Gas (°F)	500	500	490	490	490	490	500	510
Outlet Gas (°F)	190	190	190	187	188	188	188	188
AS Product (°F)	187	187	189	185	188	188	188	188
Slurry Surge Tank Level, ft.	6.1	6.4	6.9	7.4	7.7	7.8	7.8	8.6
AS Product Weigh Belt Rate, TPH	4.0	3.1	3.0	2.8	2.9	3.0	3.0	3.0
AS Slurry Feed to Centrifuge Pump Speed RPM*	700	550	550	550	550	550	550	490

*This was recorded to show effect on AS product rate - the latter indicated by weigh belt reading. Normal slurry pump speed is 800 RPM.

TABLE 4

PROCESS PARAMETERS MONITORED DURING TEST NO. 3

Elapsed Time, Min	0	30	60	90	120	150
Sulfuric Acid Flow, gpm	15	15	15	15	15	15
Ammonia Flow, Lb/hr	3700	3800	3800	3800	3700	3700
Centrifuge Amperes	21	21	20.5	20.5	20.5	20.5
Crystallizer Operation:						
Magma Level (scale reading)	5	5	5	5	5	5
Vacuum, psia	7	7	7	7	7	7
Magma Temperature, °F	148	148	149	150	152	147
AS Slurry Sp. Gr. Leaving Crystallizer (meter)	1.470	1.465	1.462	1.460	1.457	1.445
Percent Free Acid in Crystallizer Elutriation Leg	.138	.162	.142	.119	.190	.190
Rotary Dryer Temperatures:						
Inlet Gas (°F)	510	520	515	510	500	490
Outlet Gas (°F)	185	185	190	188	185	187
AS Product (°F)	185	185	190	187	185	186
Slurry Surge Tank Level Ft.	8.9	8.8	8.6	8.2	7.7	7.1
AS Product Weigh Belt Rate, TPH	5.6	5.7	5.7	5.7	5.7	5.3

United States
Environmental Protection
Agency

Office of Air, Noise, and Radiation
Office of Air Quality Planning and Standards
Research Triangle Park, NC 27711

Official Business
Penalty for Private Use
$300

Publication No. EMB Report 79-NHF-12

Postage and
Fees Paid
Environmental
Protection
Agency
EPA 335

If your address is incorrect, please change on the above label, tear off, and return to the above address.
If you do not desire to continue receiving this technical report series, CHECK HERE ☐, tear off label, and return it to the above address.

Texasgulf Inc.
elf aquitaine group
P.O. Box 48 Aurora, North Carolina 27806

June 1, 1992

Phosphate Operations
(919) 322-4111

Mr. Ron Myers
Emission Inventory Branch (MD-14)
U.S. Environmental Protection Agency
Research Triangle Park, North Carolina 27711

Re: **Texasgulf Inc.**
Aurora Phosphate Operations
AP-42 Update Information
PES Contract Number 68D00124

Dear Mr. Myers:

As requested in your letters dated March 9 and 27, 1992, please find Attachments 1 through 3 and Enclosures 1 through 14 with the information on Texasgulf Inc.'s Phosphoric Acid, Triple Superphosphate, Ammonium Phosphate, and Sulfuric Acid production facilities:

If there are any questions concerning this information, please feel free to call me at 919/322-8262.

Sincerely,

B. A. Peacock
Senior Environmental Engineer

pc: WAS/00-17-000 (w/o enclosures)
11-01-001-00 (w/ enclosures except stack test reports)

Attachment 1

Part 1: Phosphoric Acid Production

Texasgulf has four (4) wet phosphoric acid production plants that produce 30% acid from either calcined or uncalcined phosphate rock.

1) Process Description

The AP-42 process description for the production of phosphoric acid (5.11) has been reviewed with the following comments:

A) Section 5.11.1.1, Paragraph 1, Sentence 1

the phosphate rock is not ground and contains 26 to 30 percent P2O5.

B) Section 5.11.1.1. Paragraph 4, Sentence 2 and 3

25 percent versus 32 percent acid solution is produced and is concentrated to 54 percent acid with 16 vacuum evaporators versus 2 or 3.

2) Manufacturing Capacities and Average Production Levels

	Permited Production Rate, TPD	1991 Average [1] Production Rate, TPD
Plant No. 1	1250	862
Plant No. 2	1250	874
Plant No. 3	1250	926
Plant No. 4	1250	940

[1] Texasgulf has a daily production limitation; average production rates should not be used for capacity factor calculations.

3) Test Data

The air permit for the phosphoric acid plant does not require annual compliance testing. Enclosed is a copy of the latest stack sampling results for fluorides, SO2 and Total Reduced Sulfur (TRS). The fluoride test (Enclosure 1) is a comprehensive test involving eleven (11) sources. The SO2 test (Enclosure 2) was conducted on each of the four (4) cross-flow scrubber stacks. The TRS tests (Enclosures 3 and 4) were conducted on the fume scrubber stacks, vacuum pump stacks, bird filter stacks and cross-flow stacks.

4) Industry Trends

Long term plans are to expand the capacity of phosphoric acid production.

Part 2: Triple Superphosphate Production

Texasgulf has one (1) granular fertlizer plant, GTSP #2, which produces granular triple superphosphate (GTSP).

1) Process Description

The AP-42 process desription for the production of triple superphosphate (6.10.2) has been reviewed with the following comments:

A) Section 6.10.2.1, Paragraph 2, Sentence 5

slurry is introduced through the distributor pipes set lengthwise in the drum over, not under, the bed.

B) Table 6.10.2-1 Controlled Emission Factors

The actual control efficiencies of the cyclones and wet scrubbers on the GTSP #2 plant are unknown. Texsagulf has not performed testing on the pollutant inlet loading rates so overall efficiencies cannot be calculated.

2) Manufacturing Capacities and 1991 Average Production Levels

Plant	Permitted Production Rate, TPD	1991 Average Production Rate TPD
GTSP #2	1400	906

3) Test Data

The air permit for GTSP #2 does not require annual compliance testing and, therefore, no fluoride or particulate test data is available. The GTSP #2 fertlizer plant emits the following NC Air Toxic Pollutants from burning #6 fuel oil in the dryer: arsenic, beryllium, cadmium, chromuim VI, formaldehyde, manganese, mercury and nickel. Texasgulf has not conducted stack sampling to determine the emission rate of beryllium, formaldehyde, chromium VI or mercury. The remaining pollutants, arsenic, cadmium and manganese, are contained in the phosphate rock in sufficient quantities to warrent stack sampling to determine their concentration in the particulate matter. Listed below are the results (ppm) from analyzing the particulate matter collected during stack sampling while producing GTSP.

	As	Cd	Mn	Ni
Test 1	18	112	145	14,000
Test 2	16	67	74	6,980
Test 3	17	44	84	10,000
Average	17 ppm	74 ppm	101 ppm	10,327 ppm

Texasgulf has not attempted to determine the per cent metal concentration contributed from combusting #6 fuel oil or from the phosphate rock. Additionally, Texasgulf analyzed for the total amount of each metal and did not determine the various compounds of each metal that might be contained in the particulate matter.

4) Industry Trends

The world markets are demanding more DAP and less MAP and GTSP fertilizers. Texasgulf has no plans to expand the capacity of GTSP production.

Part 3: Ammonium Phosphate Production

Texasgulf has three (3) granular fertlizer plants, DAP #1, DAP #2 and GTSP #2, that produce ammonium phosphates. DAP #1 and #2 are permitted to produce diammonium phosphate (DAP) and monoammonium phosphate (MAP). The GTSP #2 plant is permitted to produce MAP. Of the three plants, only DAP #2 is a NSPS facility.

1) Process Description

The AP-42 process desription for the production of ammonium phosphates (6.10.3) has been reviewed with the following comments:

A) Section 6.10.3.1, Paragraph 2, Sentence 3

the secondary scrubbers use fresh water versus gypsum pond water.

B) Section 6.10.3.1, Paragraph 3, Sentence 1

the rotary drum ammoniator/granulator does not have a scraper or cutter mounted inside; the drum is rubber lined with flex points which tends to have little or no slurry build-up.

C) Section 6.10.3.1 Paragraph 4, Sentence 1

the ammonium phosphate granules are screened first then cooled; this reduces the amount of cooling required since the off size material is sent back to be reprocessed and not cooled; additionally, less coating oil is used since the oil is applied in the cooler to only the on size material.

D) Figure 6.2.3-1 Process Flow Diagram

Flow diagrams for the DAP #2 and GTSP #2 plants are attached (Attachments 2 and 3). The DAP #1 plant has cyclones on the dryer/cooler followed by a cyclonic /venturi wet scrubber, and a cyclonic/venturi wet scrubber on the reactor/granulator.

E) Table 6.10.3-1 Average Controlled Emission Factors

The actual control efficiencies of the cyclones and wet scrubbers on each of the plants are unknown. Texsagulf has not performed testing on the pollutant inlet loading rates so overall efficiencies cannot be calculated. Refer to Section 3 below for Test Data.

2) Manufacturing Capacities and 1991 Average Production Levels

Plant	Permitted Production Rate, TPD	1991 Average Production Rate, TPD
Dap #1		
DAP	1000	867
MAP	1000	0
DAP #2		
DAP	2200	1740
MAP	2200	0
GTSP #2		
MAP	2160	1183

3) Test Data

The air permits for DAP #1 and GTSP #2 do not require annual compliance testing. Enclosed is a copy of the latest stack test for each. The air permit for DAP #2 does require annual compliance testing; the tests for the last three years are enclosed.

Plant	lbs fluoride/ ton P2O5 input	lbs particulate/ ton P2O5 input	
DAP #1	0.234	2.513	(Enclosure 5)
DAP #2			
1989	0.009	Not required	(Enclosure 6)
1990	0.025	Not required	(Enclosure 7)
1991	0.024	0.546	(Enclosures 8 & 9)
GTSP #2			
MAP	0.002	Not required	(Enclosure 10)

The three (3) fertlizer plants emit the following NC Air Toxic Pollutants from burning #6 fuel oil in the dryers: arsenic, beryllium, cadmium, chromuim VI, formaldehyde, manganese, mercury and nickel. Texasgulf has not done stack sampling to determine the emission rate of beryllium, formaldehyde, chromium VI or mercury. The remaining pollutants, arsenic, cadmium and manganese, are contained in the phosphate rock in sufficient quantities to warrent stack sampling to determine their concentration in the particulate matter. Listed below are the results (ppm) from analyzing the particulate matter collected during stack sampling while producing DAP/MAP.

	As	Cd	Mn	Ni
Test 1	1.8	64.0	40.0	623.0
Test 2	0.3	32.0	41.0	359.0
Average	1.1 ppm	48.0 ppm	40.5 ppm	491.0 ppm

Texasgulf has not attempted to determine the per cent metal concentration contributed from combusting #6 fuel oil or from the phosphate rock. Additionally, Texasgulf analyzed for the total amount of each metal and did not determine the various compounds of each metal that might be contained in the particulate matter.

During DAP production, DAP #1 and DAP #2 emit ammonia, also a NC Air Toxic Pollutant. The air permits for those two plants currently do not require compliance testing for ammonia. However, Texasgulf has performed in-house stack testing during DAP production with the following results (gas fraction only; does not include ammonia in the particulate matter):

Plant	lbs NH3/ ton P2O5	NH3 lbs/hr	
DAP #1			
Test #1	14.2	263.3	(Enclosure 11)
Test #2	6.4	118.7	(Enclosure 12)
Average	10.3	191.0	

Note: P2O5 input rate = 18.5 TPH for tests above (not on Enclosures 6 and 7)

DAP #2			
Test #1	0.020	0.85	(Enclosure 13)
Test #2	0.030	1.23	(Enclosure 14)
Average	0.025	1.04	

Texasgulf has not conducted any recent, meaningful stack sampling for ammonia emissions during MAP production.

4) Industry Trends

The world markets are demanding more DAP and less MAP and GTSP fertilizers. Texasgulf has plans to expand its DAP capacity.

Part 4: Sulfuric Acid Production

Texasgulf has four (4) elemental sulfur burning, double absorption sulfuric acid plants.

1) Process Description

The AP-42 process desription for the production of sulfuric acid (5.17) has been reviewed with the following comments:

A) Section 5.17.2, Paragraph 1, Sentence 6

the 4 lbs SO_2/ton 100% acid is a maximum 3 hour average, not a 2 hour average.

B) Section 5.17.2, Paragraph 4, Sentence 1 and 2

in the dual absorption process, all gases go to the absorber, not just the SO_3 gas. The gas mixture includes nitrogen and oxygen as well as SO_2 and SO_3. The gas that contains the uncontrolled SO_2 gas that is forwarded to the final stages in the converter, also contains the nitrogen and oxygen gases.

C) The following describes the mist eliminators on the four (4) plants:

Plants 3/4	Drying	- Vertical Tubular
Plants 3/4	IPA	- Vertical Tubular
Plants 3/4	FAT	- Vertical Tubular + Horizontal Panel
Plants 5	Drying	- Vertical Tubular
Plants 5	IPA	- Vertical Tubular
Plants 5	FAT	- Vertical Tubular
Plants 6	FAT	- Vertical Tubular + Horizontal Panel
Plants 6	Drying	- Vertical Tubular + Horizontal Panel
Plants 6	IPA	- Vertical Tubular

2) Manufacturing Capacities and Average Production Levels

	Permited Production Rate, TPD	1991 Average Production Rate, TPD
Plant No. 3	1850	1676
Plant No. 4	1850	1698
Plant No. 5	3250	3113
Plant No. 6	3600	3395

AP No.2 Process Flow Diagram

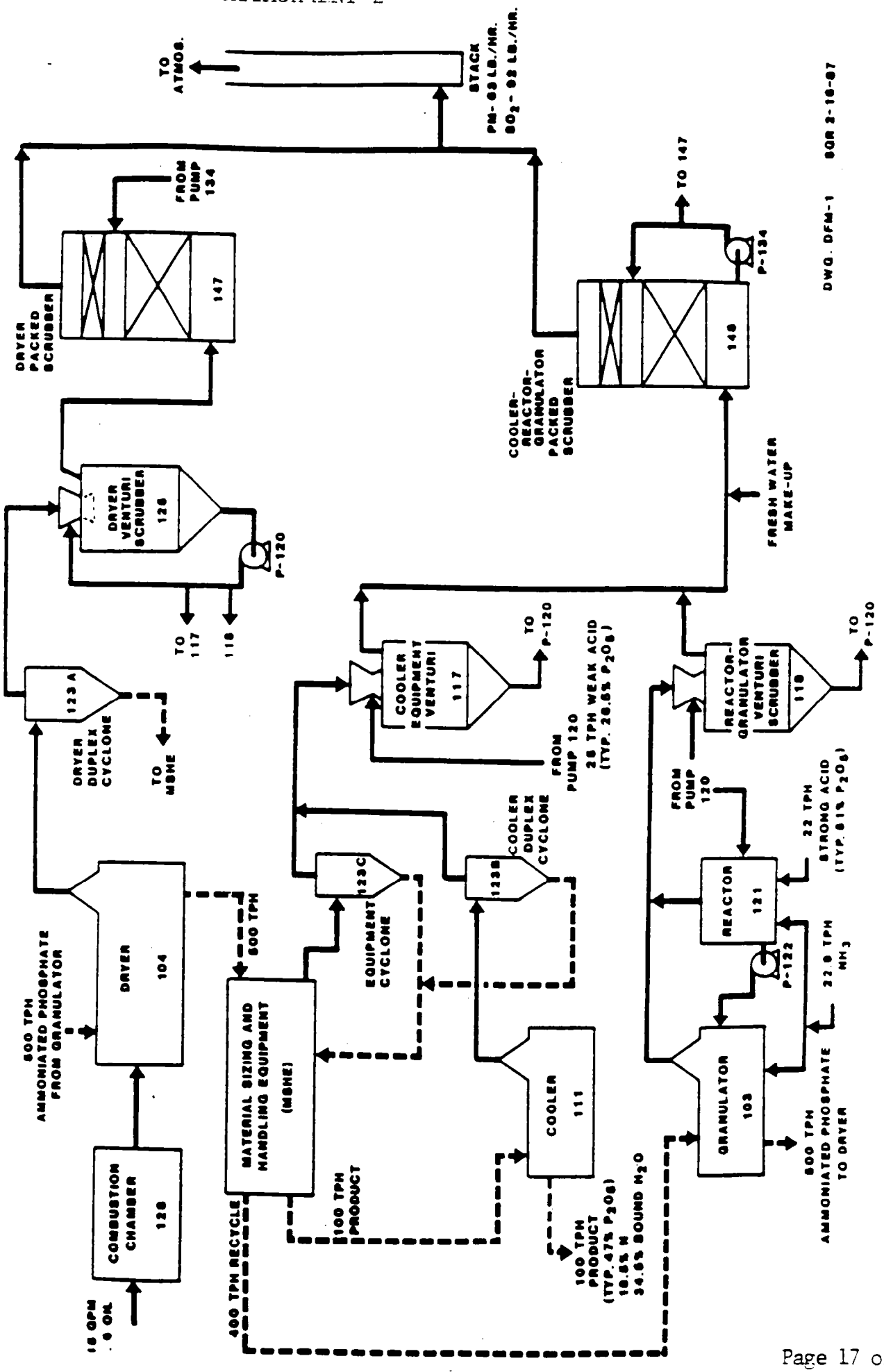

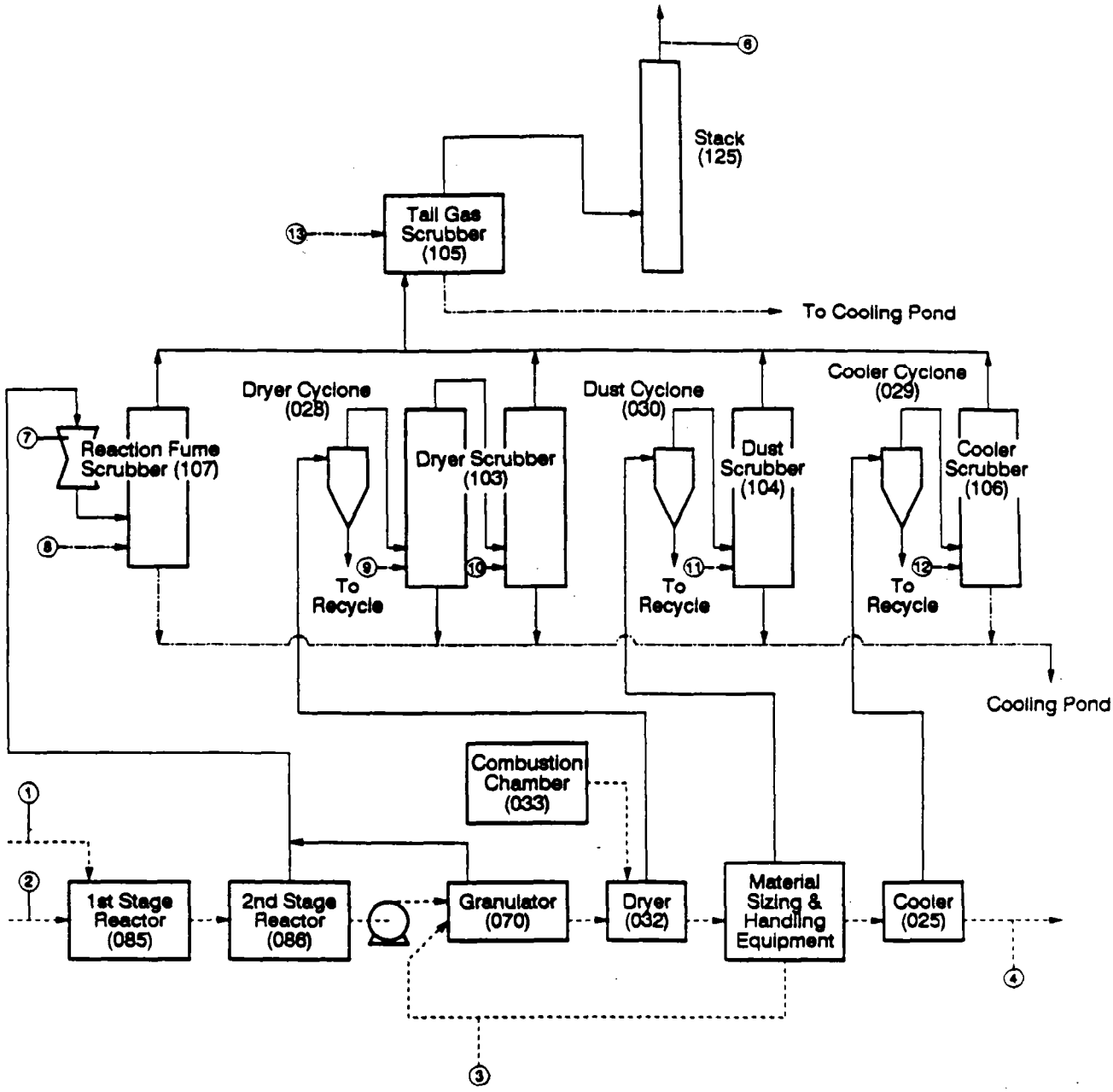

1 Phosphate Rock (31% P_2O_2)
2 Phosphoric Acid (42% P_2O_2)
3 Recycle 1,000,000 lbs/hr or 500 tons/hr
4 Product GTSP 116,600 lbs/hr or 58.3 tons/hr (46% P_2O_2) or 1400 tons/day
5 No.6 Fuel Oil, 55 x 10^6 Btu/hr
6 137,000 ACFM @ 89°F, Particulates 64.9 lbs/hr, SO_2 126.5 lbs/hr, NOx 44 lbs/hr, CO 1.4 lbs/hr, Fluorides 4.6 lbs/hr
7 Cooling Pond Water 800 gpm (minimum)
8 Cooling Pond Water 150 gpm (minimum)
9 Cooling Pond Water 550 gpm (minimum)
10 Cooling Pond Water 350 gpm (minimum)
11 Cooling Pond Water 150 gpm (minimum)
12 Cooling Pond Water 150 gpm (minimum)
13 Cooling Pond Water 1000 gpm (minimum)

GTSP No. 2 Process Flow Diagram - Area 511

5416318R

Figure 2-2. Schematic Diagram of GTSP #2 Plant

8.10

0

SOURCE COMPLIANCE TESTING
FOR

PARTICULATE, SULFUR DIOXIDE, AND SULFURIC ACID MIST EMISSIONS

FROM

AMMONIATOR-GRANULATOR/ROTARY DRYER/ROTARY COOLER

LEBANON CHEMICAL CORPORATION
BALTIMORE, MARYLAND

TESTS PERFORMED NOVEMBER 19 & 20, 1991

BY

SPOTTS, STEVENS AND McCOY, INC.
345 N. WYOMISSING BLVD. (215) 376-6581 David Hoffman
P.O. BOX 6307
READING, PENNSYLVANIA 19610-0307

JANUARY 1992

SSM FILE NO. 1250-000

SSM
SPOTTS, STEVENS and McCOY, INC
ENGINEERS • PLANNERS • SCIENTISTS

TABLE OF CONTENTS

	Page No.
CERTIFICATION	1
INTRODUCTION	2
SUMMARY OF RESULTS	4
SOURCE OPERATION	6
SAMPLING AND ANALYSIS PROCEDURES	7

APPENDICES

- SAMPLE CALCULATIONS
- RAW FIELD DATA
- ANALYTICAL RESULTS
- PROCESS DATA
- COMPUTER PRINTOUT
- CALIBRATION DATA
- PROJECT PARTICIPANTS
- STANDARD TEST METHODS

FIGURES

1 - PROCESS FLOW DIAGRAM

2 - SAMPLING PORT AND TRAVERSE POINT LOCATION

3 - PARTICULATE TEST TRAIN

4 - SULFURIC ACID MIST TEST TRAIN

CERTIFICATION OF TESTING PROCEDURES AND RESULTS

By Team Leader:

I, _____, an employee of Spotts, Stevens and McCoy, Inc.,
Donald C. Wary

Wyomissing, PA and the Emissions Sampling Team Leader for the particulate, sulfur dioxide, and sulfuric acid mist testing performed at the ammoniator-granulator/rotary dryer/rotary cooler located at Lebanon Chemical Corporation's Baltimore, MD, facility on November 19 & 20, 1991, represent that the sampling procedures followed during the emissions testing program were in accordance with the Pre-Test Protocol submitted by Spotts, Stevens and McCoy, Inc. dated October 31, 1991 and referenced U.S. Environmental Protection Agency/State of Maryland Department of Environment requirements, and that the data contained herein represent the emissions from these sources during that test program.

By Reviewer:

I, _____, Manager, Air Related Services for Spotts,
Gregory J. Matzuk, P.E.

Stevens and McCoy, Inc., Wyomissing, PA, having reviewed this report of emissions sampling activities, represent it to be performed in accordance with the Pre-Test Protocol submitted by Spotts, Stevens and McCoy, Inc. dated October 31, 1991 and referenced U.S. Environmental Protection Agency/State of Maryland Department of Environment requirements, and that the data contained herein represent the emissions during that test program.

COMMONWEALTH OF PENNSYLVANIA
REGISTERED PROFESSIONAL
GREGORY J. MATZUK
ENGINEER
No. 033855-E

Will Wade x 302
Dave Hoffmann x 357

SOURCE OPERATION

1. Process Description

Potash, mono-ammonium phosphate, sulfate of ammonia, and limestone constitute the dry feed to the ammoniator. Anhydrous ammonia, phosphoric acid, and sulfuric acid are also introduced into the ammoniator. After blending, the mix is conveyed to the granulator where water and steam are introduced, and the fertilizer granules are formed. The granules are dried in a rotary dryer and then cooled in a rotary cooler prior to conveying to bulk storage.

Emissions from the ammoniator, granulator, rotary dryer and rotary cooler are vented to two (2) pulse jet-cleaned fabric collectors and exhausted through a common stack to the atmosphere.

2. Process Flow Diagram

Figure 1 is a flow diagram of the ammoniator-granulator, rotary dryer, and rotary cooler, all controlled by a fabric collector.

3. Process Data

Throughout the two days of testing the process rate was a constant 16 tons per hour of fertilizer produced.

4. Representativeness of Raw Materials and Products

The 16-8-8 fertilizer produced by Lebanon Chemical during the test program is a typical product. The 16 TPH production rate is usual or average for this product.

INTRODUCTION

1. Test Purpose

On August 12, 1991, the State of Maryland, Department of the Environment, requested Lebanon Chemical Corporation to perform a compliance testing evaluation for the particulate emissions from the company's fabric collector serving the ammoniator-granulator/rotary dryer/rotary cooler system at the company's Baltimore, MD facility. Subsequently, on September 18, 1991, the scope of the evaluation was expanded by the Department to include sulfuric acid mist and sulfur dioxide emissions. This report contains the results of sampling activities to demonstrate the source's compliance status.

2. Test Location and Process Description

Lebanon Chemical Corporation is located at 2400 South Clinton Street, Baltimore, MD, 22124 (301-327-4700). The sources tested are the ammoniator-granulator with associated rotary dryer and rotary cooler.

The system tested produces dry granulated fertilizer. In the ammoniator-granulator dry components are mixed with liquids in combination with steam and water to form the fertilizer granules. The granules are dried and cooled prior to bulk storage.

3. Test Dates

The testing of the source described above was performed by Spotts, Stevens and McCoy, Inc. on November 19 & 20, 1991.

4. Pollutants Tested

The exhaust gas emitted from the fabric filter serving the ammoniator-granulator/rotary dryer/rotary cooler was tested for particulates, sulfur dioxide, and sulfuric acid mist.

5. Observers/Test Personnel

Mr. S. Joe Ray, Enforcement Program, Air Management Administration, MD Department of the Environment, observed the testing program.

Spotts, Stevens and McCoy personnel participating in the sampling program were:

- Donald Wary - Team Leader
- Jeffery Jessell - Technician
- William Harmuth - Technician

SUMMARY OF RESULTS

1. Emission Summary

The emission testing results are as follows:

SSM Run No.	Date	Particulates Lbs/Hr	Particulates Gr/SCFD	Sulfuric Acid Mist Lbs/Hr	Sulfuric Acid Mist mg/m^3	Sulfur Dioxide Lbs/Hr	Sulfur Dioxide PPM
LC-S-1P	11-19-91	0.25	0.004				
LC-S-2P	11-20-91	0.32	0.006				
LC-S-3P	11-20-91	0.61	0.013				
LC-S-1S02	11-19-91			0.81	0.9	0.12	1.10
LC-S-2S02	11-20-91			0.14	0.2	0.47	5.40
LC-S-3S02	11-20-91			0.20	0.3	0.30	3.46
Average Emission			0.008		0.5		3.32

2. Process Data

Process was manufacturing 16 tons per hour of 16-8-8 fertilizer throughout both days of testing. Process is rated at 25 tons per hour maximum capacity.

3. Allowable Emissions

Based on discussions with Mr. S. Joe Ray of MD Department of the Environment, the appropriate allowable emissions for these sources are:

Pollutant	Regulatory Citation (COMAR)	Standard
Particulates	Sec. 26.11.06.03(B)(2)(a)	0.03 gr/SCFD
Sulfur Dioxide	Sec. 26.11.06.05(C)(1)	2000 ppm
Sulfuric Acid Mist	Sec. 26.11.06.05(c)(2)	70 mg/m^3

Results of the test program for all pollutants are below allowable emission rates.

4. Description of Collected Samples

See the Sampling and Analysis Procedures section for a description of sampling methodology and handling of collected samples.

5. Visible Emission Summary

No visible emission observations were required during the test program.

6. Error Discussion

Sampling procedures and laboratory analyses were as per the Pre-Test Protocol. USEPA/MD Department of the Environment procedures referenced therein were utilized. No unanticipated problems developed during field testing.

No errors occurred which would affect the test results and therefore compliance status of the sources.

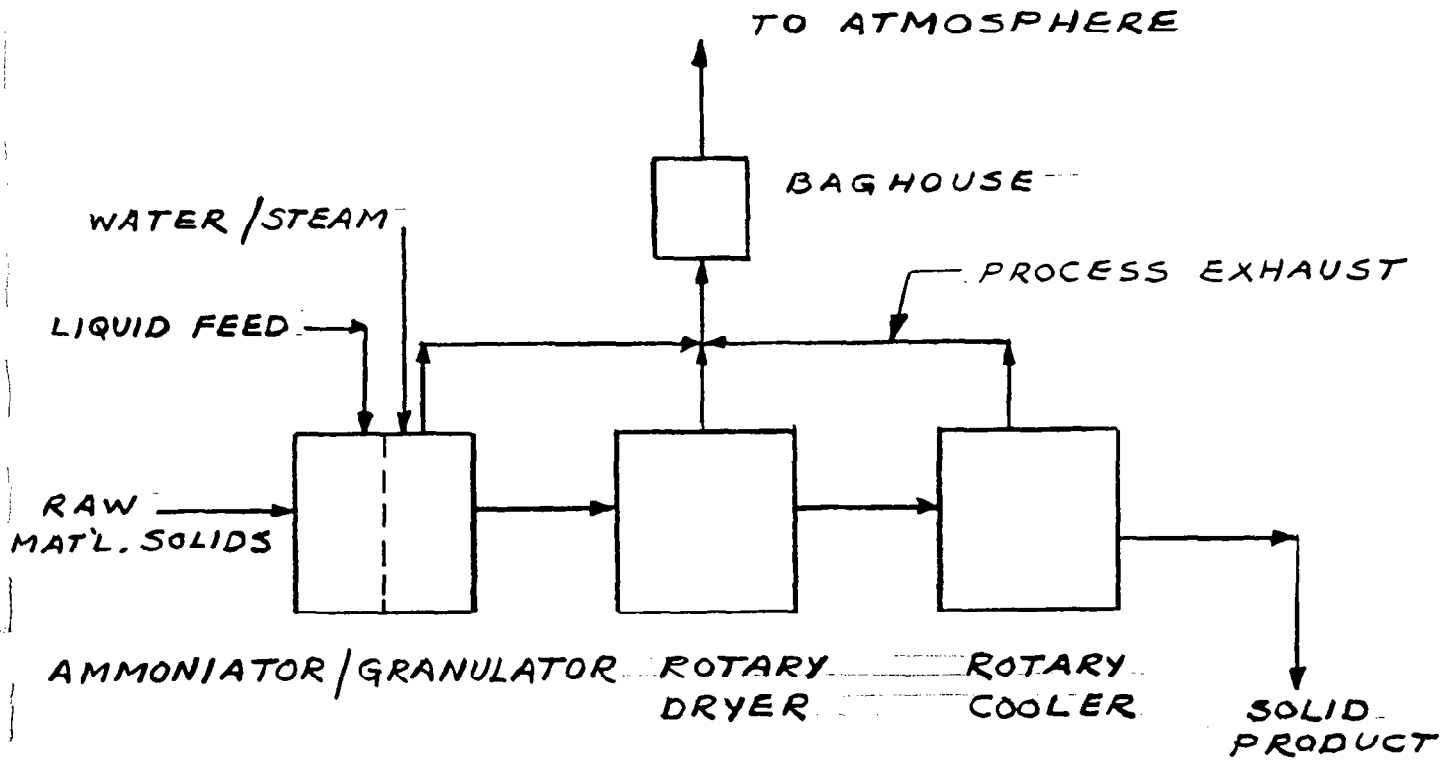

LEBANON CHEMICAL COMPANY

SCHEMATIC OF PRODUCT LINE

SSM
SPOTTS, STEVENS and McCOY, INC.
ENGINEERS PLANNERS SCIENTISTS
WYOMISSING, PENNSYLVANIA

MADE	CHECK	APPROVALS	DATE

SCALE	DRAWING NUMBER	REV.
—	FIGURE 1	

SAMPLING AND ANALYSIS PROCEDURES

1. Sampling Port Location

Figure 2 shows the stack sampling port location, stack diameter, and probe locations during sampling along the stack diameter.

2. Sampling Point Description

Two 4" sampling ports, on 90° axes, were used to access the exhaust gas for sampling. These ports were located approximately 20 feet above roof level, 10 feet below the stack outlet to the atmosphere. Sampling occurred on both axes during a particular sampling run, as shown on the data sheets in the Appendix.

Ports were identified as Port A and Port B during the test program.

3. Sampling and Analytical Procedures

The particulate source sampling train was a basic EPA approved test train as manufactured by NuTech Corporation. The unit incorporated a stainless steel nozzle, a stainless steel probe of sufficient size to traverse the subject stack, glass filter holder, glass impingers, and all ground glass joints. Each filter was a preweighed EPA approved glass fiber filter which has a pore size of 0.3 microns. Tare weights of the filters were marked on each filter container and available for inspection by the State observer before each compliance test run. In place of the cyclone in the EPA sampling train, a cyclone bypass was used. The probe and hot box were maintained at 248° + 25°F, as per EPA requirements. The temperature inside the filter holder compartment and probe were monitored throughout each test run. Specifications on nozzle size and calibration for S-type pitot tube, dry gas meter, and critical orifice all complied with EPA standards. In-stack temperatures were measured by a potentiometer using a chromel-alumel thermocouple. A complete inventory of spare parts were maintained in the field

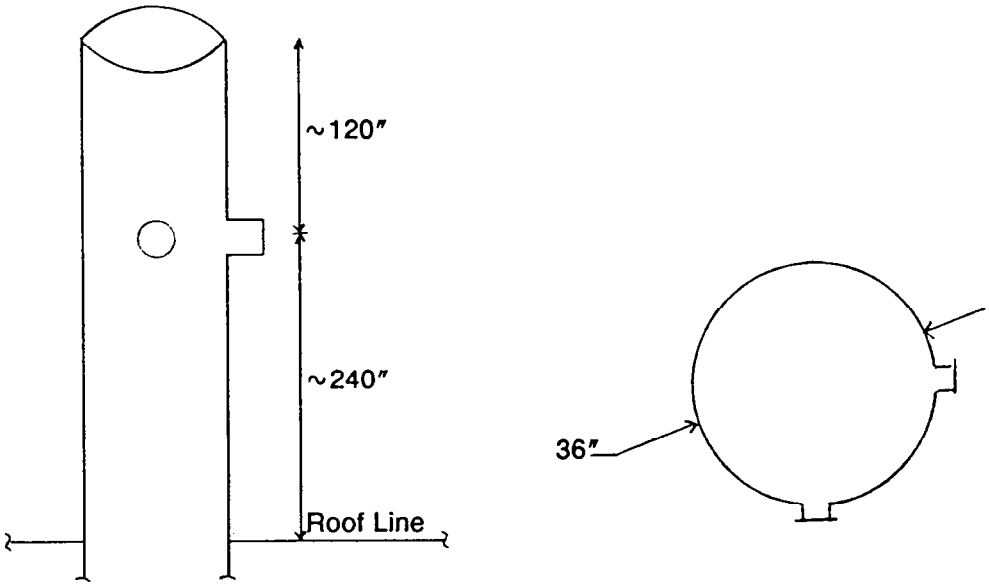

SAMPLE POINT	DISTANCE FROM PORT, INCHES
1	1.51
2	4.82
3	8.49
4	12.74
5	18.00
6	25.63
7	46.37
8	54.00
9	59.26
10	63.50
11	67.18
12	70.49

FIGURE 2
LEBANON CHEMICAL CORPORATION
AMMONIATOR-GRANULATOR/DRYER/COOLER
SAMPLE PORT & TRAVERSE POINT LOCATION
FABRIC COLLECTOR STACK

to permit replacement of all critical items of equipment. The sampling nozzle inside diameter was measured by taking the average of 3 separate micrometer readings before the start of the test runs.

Isokinetic sampling was maintained at all times, with constant observation of velocity and orifice pressure readings. The number of sample ports and traverse points complied with EPA Method 1, and are noted on Figure 2. A minimum 2.5 minute sampling time was used per sample point with separate readings and adjustments made as necessary at each traverse point such that the total sample volume at standard conditions was greater than 30 dscf.

Prior to testing, a preliminary velocity and temperature traverse, which included a check for cyclonic flow, was completed according to EPA Method 1.

Moisture content of the flue gas at the point of sampling was measured during each test run using data from the sampling train and accumulations of water in the impingers and silica gel.

Orsat analysis of combustion exhaust gas at the point of sampling was completed to satisfy requirements of EPA Method 3, to determine molecular weight of the flue gas. The technique employed included a series of grab samples taken by a Hays Orsat for CO_2 and O_2. A total of three separate readings were taken for the test program.

Particulate was sampled and analyzed according to EPA Method 5 and State of Maryland Method 1005. The probe was washed, brushed, and rinsed three times with acetone after each test run. The first and second impinger containing distilled water was rinsed with acetone and the third impinger that was dry was rinsed with acetone. All filters and rinses were retained for analysis. All filters and rinses were dessicated until a final weight was verified. The final particulate results included the filter, and probe wash. These procedures were performed for all three test runs.

Data collected during the completion of the test run was logged on preprinted data sheets, copies of which are included with this document. Calculation for gas flow, moisture content, molecular weight of flue gas and emission rates for selected emissions were completed by computer analysis. Sample calculations and derivation of terms in arriving at the results are also included with this document.

To assure quality control, all equipment used in the execution of the sampling program was calibrated and certified to meet tolerances specified by accepted sampling procedures. A copy of the calibration data is included with this document; however, the main sampling component (control box) was calibrated prior to and after the test. Copies of the new calibration data are included. Prior to and after each test run, a leak test was performed on the train from the nozzle tip through the control box. The final leak test was at the highest vacuum attained during the test run. All leak checks were within criteria. All acetone washings of the probe and filter holder were transferred to glass bottles with Teflon lid inserts. Each bottle was labeled and recorded on data sheets. Glass fiber filters were stored in individual sealed plastic petri dishes.

SO_2 and sulfuric acid mist were sampled and analyzed according to the State of Maryland Method 1008. The test train, sample procedure and test points were the same as the particulate tests, with the following differences:

1. EPA Method 8, which is similar to EPA Method 5, was followed.

2. The first impinger contained 150 ml of 80% IPA.

3. The second and third impingers contained 3% H_2O_2.

4. The fourth impinger contained 200 grams of silica gel.

5. A filter holder containing a glass fiber filter was connected between the first and second impingers.

6. After testing, the sample train was purged with ambient air for 10 minutes before cleanup.

7. Cleanup consisted of the following:

   a. The first impinger containing the 80% IPA was measured and placed into container number 1. The impinger was then rinsed with 80% IPA into container number 1.

   b. The filter was returned to its original container. The front half of the filter holder was rinsed into container number 1 and the back half into container number 2.

   c. The second and third impingers were measured and placed into container number two. They were then rinsed, with distilled H_2O, into container number 2.

   d. The fourth impinger containing the silica gel was placed into its original container and reweighed.

   e. The sulfuric acid mist was analyzed according to EPA Method 8. The filter was placed into the IPA and an aliquot taken. The aliquot was titrated with Barium Perchlorate.

      The SO_2 was analyzed from the back half of the test train. An aliquot was taken from the H_2O_2 sample and titrated with Barium Perchlorate.

To satisfy chain of custody requirements, all samples generated in the field were properly labeled and placed in sample boxes under supervision of the designated project supervisor. The samples were retained by SSM and transported to SSM's laboratory where they were processed and analyzed under the direct supervision of a laboratory chemist. Whenever possible and where laboratory analysis is non-destructive, samples are retained after initial analysis for a suitable period of time and therefore available should subsequent analyses become necessary.

Figures 3 and 4 illustrate the particulate and sulfuric acid/SO_2 test trains.

No deviations from the methods described herein occurred during either sampling or analysis.

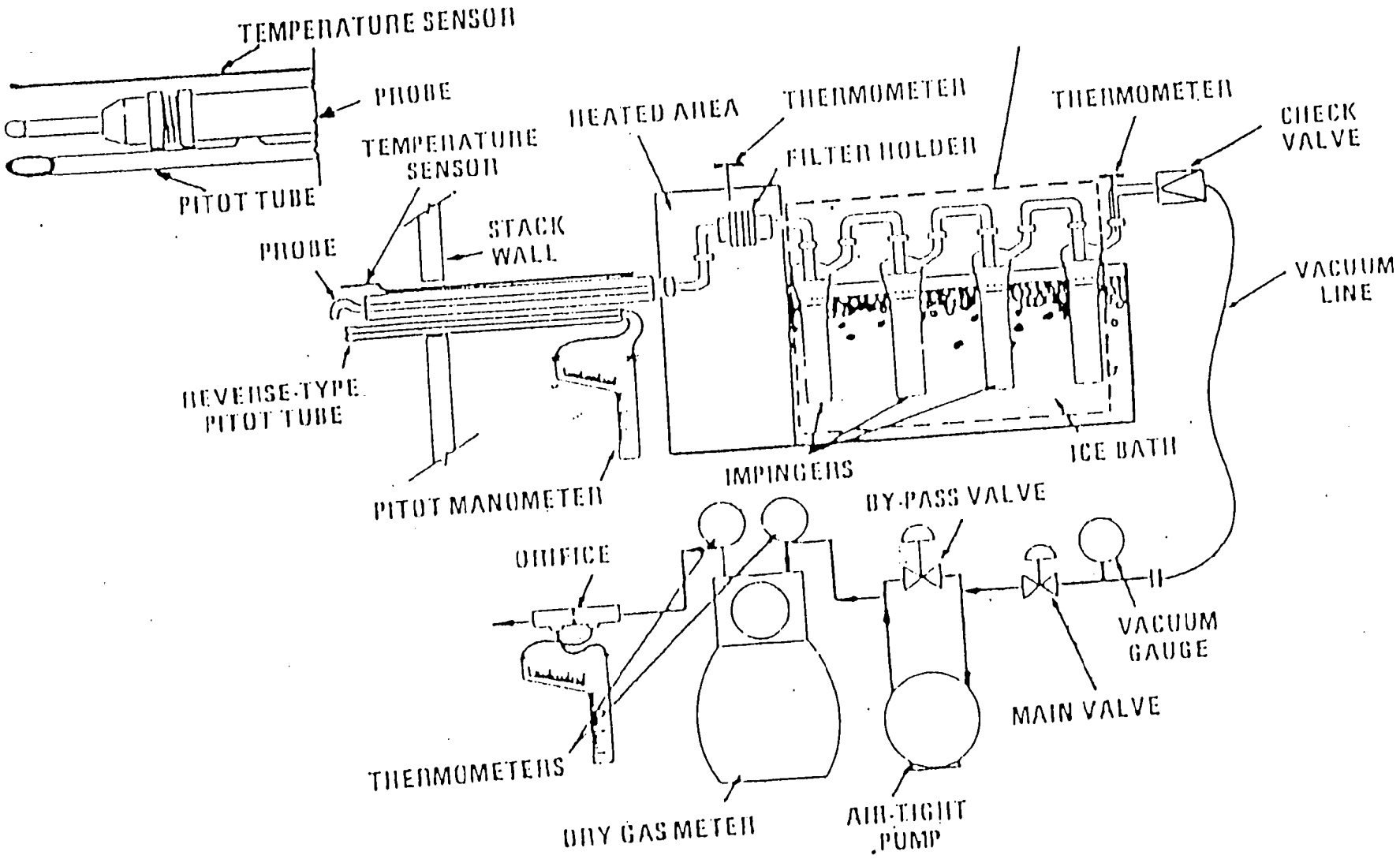

FIGURE 3

PARTICULATE TEST TRAIN
LEBANON CHEMICAL CO.

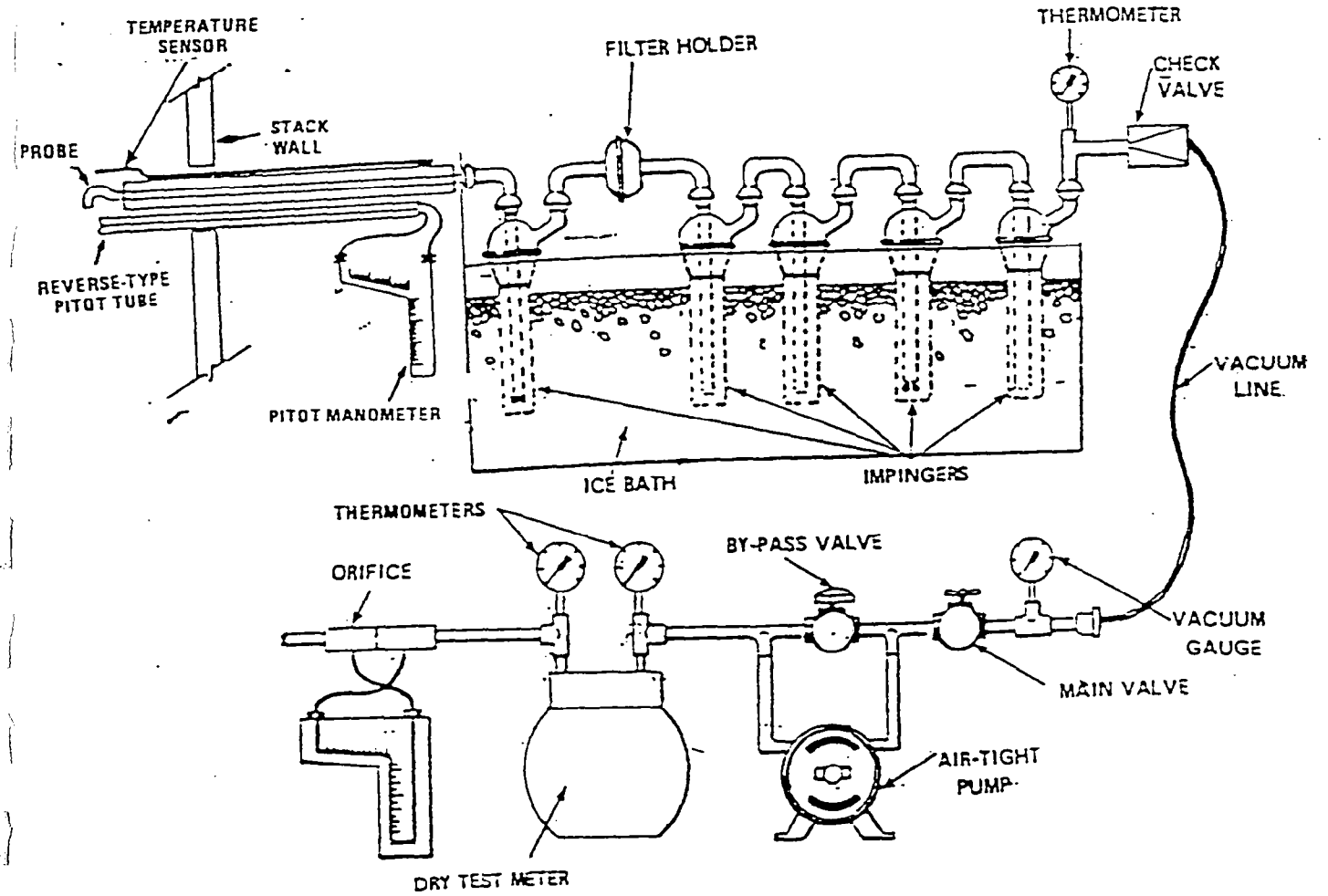

FIGURE 4

SULFURIC ACID MIST TEST TRAIN
LEBANON CHEMICAL CO.

APPENDICES

SAMPLE CALCULATIONS

SPOTTS, STEVENS AND McCOY, INC.
AIR PROGRAMS

I. ISOKINETIC SAMPLING EQUATIONS

1. Y = Meter Calibration Factor

2. BP = Barometric Pressure, Inches Hg

3. DN = Nozzle Diameter, Inches

4. TT = Net Sampling Time, Minutes

5. AS = Sampling Locaton Area, Square Inches

6. VM = Sample Gas Meter Volume, Cu.Ft.

7. PM = Average Orifice Pressure Drop, Inches H2O

8. TM = Average Dry Gas Meter Temperature, F

9. VW = Total Moisture Collected, ml

10. PST = Static Pressure, Inches H2O

PS = Stack Pressure, Inches Hg

11. PS = (PST/13.6) + BP

12. TS = Sampling Location Temperature

13. VMSTD = Volume Of Dry Gas Sampled At Standard Conditions, DSCF

$$VMSTD = \frac{17.65*VM*Y*(BP+(PM/13.6))}{(TM + 460)}$$

P. 60

14. VW gas = Volume Of Water At Standard Conditions

VW gas = (0.0471 * VW)

15. % M = Percent Moisture In Stack Gas

$$\% M = \frac{(100 * VW\ gas)}{(VMSTD + VW\ gas)}$$

16. MD = Mole Fraction Of Dry Gas

$$MD = \frac{(100 - \% M)}{100}$$

17. MWD = Molecular Weight Of Dry Gas

$$MWD = (\%CO2 * 0.44) + (\%O2 * 0.32) + [(\%CO2 + N2) * 0.28]$$

18. %EA = % Excess Air

$$\%EA = \frac{[(\%O2) - 0.5 * (\%CO)]}{0.264(\%N2) - [(\%O2) + 0.5 * (\%CO)]} * 100$$

19. MW = Molecular Weight Of Wet Stack Gas

$$MW = (MWD * MD) + (18 (1 - MD))$$

20. SDE = Average Square Root Of (Velocity Head * Absolute Stack Temp

$$SDE = [Delta\ P * (TS + 460)]^{1/2}$$

21. VS = Stack Gas Velocity At Stack Conditions

$$VS = 5130 * CP * Avg(SDE) * [1/(PS * MW)]^{1/2}$$

→ Pitot Co-eff = 0.84 ?

→ ??

22. QS = Stack Gas Volumetric Flow Rate At Standard Conditions, DSCFM

$$QS = \frac{0.123 * VS * AS * MD * PS}{(TS + 460)}$$

23. QA = Stack Gas Volumetric Flow Rate At Stack Conditions, ACFM

$$QA = \frac{0.05667 * QS * (TS + 460)}{PS * MD}$$

24. %I = Percent Isokinetic ??

$$\%I = \frac{1032 * (TS + 460) * VMSTD}{VS * TT * PS * MD * (DN * DN)}$$

OK. SK 3/19/92

25. Gr/DSCF = Particulate Loading

$$Gr/DSCF = \frac{0.0154 * mg}{VMSTD}$$

26. LB/HR = Particulate, LB/HR

LB/HR = 0.00857 * Gr/DSCF * QS

27. Gr/DSCF = VOC Loading

$$Gr/DSCF = \frac{0.0154 * mg}{VMSTD}$$

28. LB/HR = VOC, LB/HR

LB/HR = 0.00857 * Gr/DSCF * QS

SPOTTS, STEVENS AND McCOY, INC.
AIR PROGRAMS

OXIDES OF SULFUR SAMPLE CALCULATIONS

1. BP = Barometric Pressure

2. VM = Gas Meter Volume

3. TM = Average Meter Temperture

4. PM = Average orifice Pressure Drop

5. VMSTD = Gas Meter Volume At Standard Conditions

$$VMSTD = \frac{17.65 * VM * (BP + PM)}{(TM + 460)}$$

6. SO4 = SO4 as Reported

7. TV = Total Volume Of NaOH Solution

8. mg, SO2 = mg, SO2 Collected

$$\frac{mg,SO4 * TV * \text{Molecular Wt } SO2\ (64.062)}{\text{Molecular Wt. } SO4\ (96.041)}$$

9. Gr, SO2/DSCF = Grains SO2 Per DSCF

$$Gr, SO2/DSCF = \frac{0.0154 * mg, SO2}{VMSTD}$$

10. Bs,SO2/DSCF = LBS, SO2 Per DSCF

$$LBS,SO2/DSCF = \frac{GR/DSCF}{7000}$$

11. PPM, SO2 = Parts Per Million, SO2

$$PPM, SO2 = \frac{LBS/DSCF * 385100000}{64.062}$$

12. LBS/HR, SO2 = Pounds per Hour, SO2

LBS/HR, SO2 = LBS/DSCF * DSCFM * 60 Min

13. PPM,SO3 = Parts Per Million, SO3

$$PPM,SO3 = \frac{24.05 * ml\ Ba(ClO4)2 * meq/ml\ Ba(ClO4)2 * TV/Aliquot * (TM + 460)}{VM * (BP+(PM/13.6))}$$

14. LBS/HR, SO3 = Pounds per Hour, SO3

$$LBS/HR, SO3 = \frac{PPM * 80 * DSCFM * 60\ Min}{385100000}$$

RAW FIELD DATA

SPOTTS, STEVENS and McCOY, INC.
AIR PROGRAMS

SHEET 1 OF 2

CLIENT: LEBANON CHEMICAL
W.O. NO.: 1250-000
PLANT: Baltimore
LOCATION: stack
DATE: 11/19/91
RUN NO.: LC-S-1502
OPERATOR: JCJ
SAMPLE BOX NO.:
METER BOX NO.: 1362
METER H:
C FACTOR: 1.00 .118

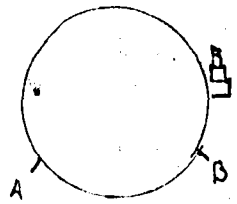

PITOT TUBE COEF.: .84
PITOT TUBE NO.:
AMBIENT TEMP.: 60
BP: 30.24
ASSUMED MOIS.: 5
PROBE LENGTH:
NOZZLE DIA.: .373
PROBE HEAT SET:
LEAK RATE: pre dead dead at 12" pos
THIMBLE NO.:
FILTER NO.:

POINT NO.	POINT DIS.	CLOCK TIME ACTUAL	CLOCK TIME RUN MIN.	METER CU. FT.	PITOT "H2O	ORIFICE "H2O	STACK TEMP. °F	PROBE TEMP. °F	FILTER TEMP. °F	IMP. TEMP. °F	METER TEMP. INLET °F	METER TEMP. OUTLET °F	PUMP VAC. "HG	Static
B-12		1428	0.0	590.000	.11	1.73	210	227		55	60	63	6	
11			3.5	592.6	.10	1.59	212	225		55	63	63	6	
10			7	595.0	.12	1.91	217	230		57	67	62	7.5	
9			10.5	597.6	.11	1.73	218	232		60	70	62	7.1	
8			14	600.3	.11	1.73	215	228		62	73	62	7.1	
7			17.5	602.8	.12	1.91	211	224		62	75	64	8.0	
6			21	605.4	.12	1.91	215	226		64	78	65	8.0	
5			24.5	608.1	.11	1.73	218	228		66	80	65	7.5	-.18
4			28	610.7	.12	1.91	220	234		66	85	67	8.5	
3			31.5	613.4	.11	1.73	222	237		67	87	69	7.5	
2			35	616.0	.12	1.91	221	243		66	90	70	8.5	
1			38.5	618.7	.11	1.73	218	245		68	92	70	8.0	
Stop		1510	42	621.308										

IMPINGERS	END	START	DIFF
1 IPA	118	100	18
2 H_2O_2	125	100	25
3 H_2O_2	128	100	28
4			
5			
GEL 15	281	237	

1628 Purge
1643 END

ORSAT	CO2	CO2+O2	O2
1			
2			
3			

115

SSM
SPOTTS, STEVENS and McCOY, INC
ENGINEERS • PLANNERS • SCIENTISTS

SOURCE DATA — SHEET 2

CLIENT:	LEBANON CHEMICAL
W.O. NO.:	1250 000
PLANT:	Baltimore
LOCATION:	Stack

DATE:	11/19/91
RUN NO.:	2C-S-1 SO2
OPERATOR:	JCJ

POINT NO.	POINT DIS. INS.	CLOCK TIME ACTUAL	CLOCK TIME RUN	METER CU. FT.	PITOT "H2O	ORIFICE "H2O	METER TEMP. °F INLET	METER TEMP. °F OUTLET	STACK TEMP. °F	PUMP VAC "HG	BOX TEMP °F	IMP TEMP °F	Probe	Static
A-12		1539	0.0	621.308	.11	1.73	70	70	212	7.0		60	230	
11			3.5	623.9	.12	1.91	75	71	218	7.9		60	235	
10			7	626.7	.13	2.05	82	72	220	8.5		62	238	
9			10.5	629.4	.12	1.91	88	72	215	8.5		63	239	
8			14	632.3	.14	2.20	90	74	212	9.5		65	236	
7			17.5	635.1	.15	2.39	94	75	210	10.0		66	234	-0.19
6			21	638.2	.15	2.39	98	76	214	10.0		68	236	
5			24.5	641.2	.16	2.53	102	78	215	11.0		68	235	
4			28	644.3	.14	2.20	104	79	212	9.5		69	238	
3			31.5	647.1	.15	2.39	106	80	216	10.0		68	241	
2			35	650.1	.14	2.20	106	81	211	9.5		67	243	
1			38.5	653.1	.13	2.05	105	82	208	9.0		66	239	
stop		1621	42	655.903										

COMMENTS:

SSM
SPOTTS, STEVENS and McCOY, INC.
ENGINEERS • PLANNERS • SCIENTISTS

SPOTTS, STEVENS and McCOY, INC
AIR PROGRAMS

SHEET 1 OF 2

CLIENT:	Lebanon Chemical	PITOT TUBE COEF.:	.84
W.O. NO.:	1250-000	PITOT TUBE NO.:	
PLANT:	Baltimore	AMBIENT TEMP.:	60°F
LOCATION:	stack	BP:	
DATE:	11/20/91	ASSUMED MOIS.:	9
RUN NO.:	LC-S-2 SO2	PROBE LENGTH:	
OPERATOR:	JCJ	NOZZLE DIA.:	.373
SAMPLE BOX NO.:		PROBE HEAT SET:	
METER BOX NO.:	1362	LEAK RATE:	pre leak .004 at 6" post
METER H:		THIMBLE NO.:	
C FACTOR:	.93 .125	FILTER NO.:	

POINT NO.	POINT DIS.	CLOCK TIME ACTUAL	CLOCK TIME RUN MIN.	METER CU. FT.	PITOT "H2O	ORIFICE "H2O	STACK TEMP. °F	PROBE TEMP. °F	FILTER TEMP. °F	IMP. TEMP. °F	METER TEMP. INLET °F	METER TEMP. OUTLET °F	PUMP VAC. "HG	Static
B-12		0850	0.0	665.402	0.10	1.48	220	240		56	65	64	5.2	
11			3.5	667.8	.08	1.18	215	244		58	69	65	4.5	
10			7	—	.10	1.48	212	237		58	74	66	5.3	
9			10.5	672.3	.08	1.18	214	235		59	79	68	4.5	
8			14	—	.07	1.01	218	239		60	82	69	3.8	
7			17.5	676.5	.09	1.30	213	242		60	86	70	5.0	
6			21	678.7	.09	1.30	209	245		60	89	73	5.0	-0.16
5			24.5	680.9	0.10	1.48	214	248		62	90	74	5.5	
4			28	683.3	.10	1.48	213	243		62	94	76	5.5	
3			31.5	685.7	.09	1.30	209	239		64	97	79	5.0	
2			35	688.1	.08	1.18	218	244		64	98	80	4.6	
1			38.5	690.3	.07	1.01	220	247		65	96	81	4.0	
Stop		0935	42	692.346										

IMPINGERS	END	START	DIFF
1 IPA	128	100	28
2 H_2O_2	122	100	[illegible]
3 H_2O_2	122	100	22
4			
5			
GEL	274	237	37

Purge
Start
Stop

ORSAT	CO2	CO2+O2	O2
1			
2			
3			

1046 purge

6"

107

SSM
SPOTTS, STEVENS and McCOY, INC
ENGINEERS • PLANNERS • SCIENTISTS

SOMMERTIC METHOD

SHEET F 2

CLIENT: Lebanon Chemical
W.O. NO.: 1250-000
PLANT: Baltimore
LOCATION: Stack

DATE: 11/20/91
RUN NO.: LC-S-2502
OPERATOR: JCJ

POINT NO.	POINT DIS. INS.	CLOCK TIME ACTUAL	CLOCK TIME RUN	METER CU. FT.	PITOT "H2O	ORIFICE "H2O	METER TEMP. °F INLET	METER TEMP. °F OUTLET	STACK TEMP. °F	PUMP VAC "HG	BOX TEMP °F	IMP TEMP °F	Probe	Static
A-12		0956	0.0	692.346	.07	1.01	78	78	222	3.6		60	232	
11			3.5	694.4	.08	1.18	79	79	219	4.2		60	227	
10			7	696.6	.10	1.48	82	79	221	5.2		61	230	
9			10.5	699.0	.06	.87	85	79	211	3.5		60	226	
8			14	700.8	.06	.87	86	79	208	3.5		60	221	
7			17.5	702.4	.05	.72	86	79	217	3.0		61	217	-0.12
6			21	704.5	.08	1.18	86	79	209	4.2		62	220	
5			24.5	706.6	.08	1.18	87	80	212	4.2		63	224	
4			28	708.8	.09	1.30	88	80	204	5.0		64	227	
3			31.5	711.0	.10	1.48	89	80	214	5.5		65	231	
2			35	713.4	.09	1.30	89	80	220	4.7		67	238	
1			38.5	715.8	.09	1.30	89	80	207	5.0		67	240	
Stop		1038	42	718.028										

COMMENTS:

215

SSM
SPOTTS, STEVENS and McCOY, INC.
ENGINEERS • PLANNERS • SCIENTISTS

SPOTTS, STEVENS and McCOY, INC
AIR PROGRAMS

SHEET 1 OF 2

CLIENT: Lebanon Chemical	PITOT TUBE COEF.: .84
W.O. NO.: 1250-000	PITOT TUBE NO.:
PLANT: Baltimore	AMBIENT TEMP.:
LOCATION: Stack	BP:
DATE: 11/20/91	ASSUMED MOIS.:
RUN NO.: LC-5-3S02	PROBE LENGTH:
OPERATOR: PCW	NOZZLE DIA.: .373
SAMPLE BOX NO.:	PROBE HEAT SET:
METER BOX NO.: 1362	LEAK RATE: post-.004 at 6" pre leak at 15"
METER H:	THIMBLE NO.:
C FACTOR:	FILTER NO.:

POINT NO.	POINT DIS.	CLOCK TIME ACTUAL	CLOCK TIME RUN MIN.	METER CU. FT.	PITOT "H2O	ORIFICE "H2O	STACK TEMP. °F	PROBE TEMP. °F	FILTER TEMP. °F	IMP. TEMP. °F	METER TEMP. INLET °F	METER TEMP. OUTLET °F	PUMP VAC. "HG	
0-12		1224	0.0	730.000	.06	.86	200	221		64	78	78	3	
11			3.5	731.8	.06	.86	201	223		62	79	78	3	
10			7	733.7	.05	.70	197	223		60	81	78	3	
9			10.5	735.5	.07	1.00	190	225		58	83	79	3	
8			14	737.4	.06	.86	189	226		58	85	79	3	
7			17.5	739.4	.07	1.00	203	225		58	87	80	4	-.12
6			21	741.4	.07	1.00	208	227		58	89	80	4	
5			24.5	743.5	.09	1.30	211	224		59	91	81	5	
4			28	745.9	.10	1.48	213	224		60	93	82	5	
3			31.5	748.2	.09	1.30	212	226		60	94	82	5	
2			35	750.5	.08	1.16	211	228		61	93	83	5	
1			38.5	752.9	.09	1.30	211	227		61	92	83	5	
Stop		1306	42	755.041										

IMPINGERS	END	START	DIFF
1 TPH	123	100	23
2 H_2O_2	116	100	16
3 H_2O_2	117	100	17
4			
5			
GEL	279	237	42

Purge 1411 start
1426 stop

ORSAT	CO2	CO2+O2	O2
1			
2			
3			

SSM
SPOTTS, STEVENS and McCOY, INC
ENGINEERS • PLANNERS • SCIENTISTS

SPOTTS, STEVENS and McCOY, INC
AIR PROGRAMS

SHEET 2 OF 2

CLIENT: LeBaron Chemical
W.O. NO.: 1250-000
PLANT: Baltimore
LOCATION: Stack

DATE: 11/20/91
RUN NO.: LC-5-3502
OPERATOR: DCW

POINT NO.	POINT DIS.	CLOCK TIME ACTUAL	CLOCK TIME RUN MIN.	METER CU. FT.	PITOT "H2O	ORIFICE "H2O	STACK TEMP. °F	PROBE TEMP. °F	FILTER TEMP. °F	IMP. TEMP. °F	METER TEMP. INLET °F	METER TEMP. OUTLET °F	PUMP VAC. "HG	
B-1		1324.	0.0	755.041	.08	1.15	180	230		68	80	80	4	
2			3.5	—	.08	1.15	183	233		66	83	80	4	
3			7	759.4	.09	1.30	191	235		62	86	80	5	
4			10.5	761.8	.08	1.15	197	232		61	89	80	4	
5			14	763.9	.09	1.30	207	235		61	90	81	5	
6			17.5	766.3	.10	1.47	212	238		60	91	81	5	-.11
7			21	768.7	.08	1.15	213	236		60	92	81	4	
8			24.5	771.0	.09	1.30	215	232		61	92	82	5	
9			28	773.2	.10	1.47	215	237		61	92	82	5	
10			31.5	—	.10	1.47	214	235		62	92	82	5	
11			35	778.0	.09	1.30	202	234		63	93	83	5	
12			38.5	780.4	.09	1.30	198	230		63	93	83	5	
Stop		1406	42	782.592										

COMMENTS: 780

SSM
SPOTTS, STEVENS and McCOY, INC
ENGINEERS • PLANNERS • SCIENTISTS

SPOTTS, STEVENS and McCOY, INC
AIR PROGRAMS

CLIENT: Lebanon Chemical
W.O. NO.: 1250-000
PLANT: Baltimore
LOCATION: stack
DATE: 11/20/91
RUN NO.: LC-S-3P
OPERATOR: DW
SAMPLE BOX NO.:
METER BOX NO.: 45
METER H:
C FACTOR:

PITOT TUBE COEF.: .84
PITOT TUBE NO.:
AMBIENT TEMP.:
BP:
ASSUMED MOIS.: 9
PROBE LENGTH:
NOZZLE DIA.: .370
PROBE HEAT SET:
LEAK RATE: pre dead wt 15 post dead wt 5"
THIMBLE NO.:
FILTER NO.: D-22

POINT NO.	POINT DIS.	CLOCK TIME ACTUAL	CLOCK TIME RUN MIN.	METER CU. FT.	PITOT "H2O	ORIFICE "H2O	STACK TEMP. °F (5)	PROBE TEMP. °F (2)	FILTER TEMP. °F (3)	IMP. TEMP. °F (4)	METER TEMP. INLET °F (6)	METER TEMP. OUTLET °F (7)	PUMP VAC. "HG	Sheet 1
B-1		1225	0.0	56.608	.07	1.05	190	188	232	71	84	78	2	
2			3.5	58.5	.08	1.20	194	197	235	64	84	78	2	
3			7	60.6	.08	1.20	193	200	233	63	83	78	2	
4			10.5	—	.07	1.05	205	205	231	62	83	79	2	
5			14	65.2	.07	1.05	210	206	231	63	85	80	2	
6			17.5	66.9	.08	1.20	212	207	227	63	87	80	2	
7			21	—	.08	1.20	212	212	225	64	88	81	2	
8			24.5	70.8	.08	1.20	213	232	227	64	90	82	2	7.15
9			28	—	.09	1.38	214	238	224	64	90	82	3	
10			31.5	75.2	.08	1.20	214	245	223	65	90	82	2	
11			35	77.2	.09	1.38	213	262	226	65	90	82	3	
12			38.5	79.6	.09	1.38	215	269	220	66	90	82	3	
Stop		1307	42	81.712										

IMPINGERS		END	START	DIFF
1	D1	250	150	100
2	D1	166	150	16
3				
4				
5				
GEL		249	237	12

ORSAT	CO2	CO2+O2	O2
1	1.4	21.0	19.6
2	1.2	20.8	19.6
3	1.0	20.7	19.7

SSM
SPOTTS, STEVENS and McCOY, INC
ENGINEERS • PLANNERS • SCIENTISTS

SPOTTS, STEVENS and McCOY, INC.
AIR PROGRAMS

SHEET 2 OF 2

CLIENT: LEBANON CHEMICAL
W.O. NO.: 1250.000
PLANT: Baltimore
LOCATION: [illegible]

DATE: 11/20/91
RUN NO.: LC-[illegible]-3P
OPERATOR: DCW

POINT NO.	POINT DIS.	CLOCK TIME ACTUAL	CLOCK TIME RUN MIN.	METER CU. FT.	PITOT "H2O	ORIFICE "H2O	STACK TEMP. °F (5)	PROBE TEMP. °F (2)	FILTER TEMP. °F (3)	IMP. TEMP. °F (4)	METER TEMP. INLET °F (6)	METER TEMP. OUTLET °F (7)	PUMP VAC. "HG	Stack
A-12		1325	0.0	81.712	.10	1.54	212	270	240	71	84	81	3	
11			3.5	84.1	.08	1.20	214	251	244	62	85	81	3	
10			7	86.6	.07	1.04	216	232	252	50	86	81	2	
9			10.5	88.5	.08	1.20	216	230	238	61	87	81	3	
8			14	90.5	.07	1.04	215	224	236	61	89	82	2	
7			17.5	92.6	.09	1.38	214	217	239	61	88	82	2	-.13
6			21	94.8	.09	1.38	216	202	241	62	89	82	3	
5			24.5	96.9	.09	1.38	209	227	240	62	89	82	3	
4			28	99.2	.10	1.54	207	243	237	63	89	82	2	
3			31.5	101.6	.09	1.38	206	229	235	63	90	82	3	
2			35	103.7	.10	1.54	193	222	234	64	90	82	3	
1			38.5	106.3	.09	1.38	188	224	235	64	90	82	3	
Stop		1407	42	108.511										

COMMENTS: 107

SSM
SPOTTS, STEVENS and McCOY, INC
ENGINEERS • PLANNERS • SCIENTISTS

SPOTTS, STEVENS and McCOY, INC.
AIR PROGRAMS

SHEET 1 OF 2

CLIENT: LEBANON CHEMICAL
W.O. NO.: 1250-000
PLANT: Baltimore
LOCATION: stack
DATE: 11/19/91
RUN NO.: LC-S-1P
OPERATOR: DCW
SAMPLE BOX NO.: -
METER BOX NO.: 45
METER H: R=1.13
C FACTOR:

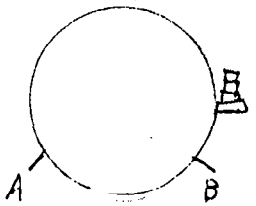

PITOT TUBE COEF.: .84
PITOT TUBE NO.:
AMBIENT TEMP.:
BP: 30.24
ASSUMED MOIS.: 5
PROBE LENGTH:
NOZZLE DIA.: .370
PROBE HEAT SET:
LEAK RATE: dcw at 15" pre dcw at 7" post
THIMBLE NO.:
FILTER NO.: D-26

POINT NO.	POINT DIS.	CLOCK TIME ACTUAL	CLOCK TIME RUN MIN.	METER CU. FT.	PITOT "H2O	ORIFICE "H2O	5 STACK TEMP. °F	2 PROBE TEMP. °F	3 FILTER TEMP. °F	4 IMP. TEMP. °F	6 METER TEMP. INLET °F	7 METER TEMP. OUTLET °F	PUMP VAC. "HG	static
A-1		1429.	0.0	930.711	.15	2.46	192	231	244	62	62	63	4	
2			3.5	933.7	.15	2.46	195	225	245	62	64	63	5	
3			7	937.0	.16	2.60	197	223	244	62	65	63	5	
4			10.5	939.4	.16	2.60	207	223	245	66	67	63	5	
5			14	943.0	.16	2.60	211	218	246	65	68	63	5	
6			17.5	945.7	.17	2.80	215	240	246	63	69	63	5	
7			21	948.8	.18	2.95	219	246	247	63	71	64	6	
8			24.5	951.9	.18	2.95	221	254	248	64	73	65	6	-.22
9			28	955.2	.16	2.56	221	260	248	65	74	65	5	
10			31.5	958.0	.16	2.56	219	260	248	65	75	66	5	
11			35	961.3	.15	2.43	220	260	249	66	77	67	5	
12			38.5	964.1	.15	2.43	220	270	248	67	79	68	5	
Stop		1511	42	966.990										

IMPINGERS		END	START	DIFF
1	DI	218	150	68
2	DI	208	150	58
3				
4				
5				
GEL		264	237	27

+.10
+.10

ORSAT	CO2	CO2+O2	O2
1	1.2	20.9	19.7
2	1.2	20.8	* 19.6
3	1.0	20.7	19.7

Use this

* Pencil figures come later

153

SSM
SPOTTS, STEVENS and McCOY, INC
ENGINEERS • PLANNERS • SCIENTISTS

SPOTTS, STEVENS and McCOY, INC.
AIR PROGRAMS

SHEET 1 OF 2

CLIENT:	LEBANON CHEMICAL
W.O. NO.:	1250-000
PLANT:	Baltimore
LOCATION:	Steele
DATE:	11/30/91
RUN NO.:	LC-5-2P
OPERATOR:	DLW
SAMPLE BOX NO.:	
METER BOX NO.:	
METER H:	K=.12
C FACTOR:	

PITOT TUBE COEF.:	.84
PITOT TUBE NO.:	
AMBIENT TEMP.:	
BP:	30.22
ASSUMED MOIS.:	9
PROBE LENGTH:	
NOZZLE DIA.:	.370
PROBE HEAT SET:	
LEAK RATE:	pos dial at 15" pos dial at 5"
THIMBLE NO.:	
FILTER NO.:	D-25

POINT NO.	POINT DIS.	CLOCK TIME ACTUAL	CLOCK TIME RUN MIN.	METER CU. FT.	PITOT "H2O	ORIFICE "H2O	STACK TEMP. °F (5)	PROBE TEMP. °F (2)	FILTER TEMP. °F (3)	IMP. TEMP. °F (4)	METER TEMP. INLET °F (6)	METER TEMP. OUTLET °F (7)	PUMP VAC. "HG	Static
A-1		0851	0.0	3.307	.09	1.38	189	243	246	61	67	67	3	
2			3.5	5.6	.11	1.69	191	245	245	48	68	67	3	
3			7	8.2	.10	1.55	202	239	247	49	71	68	3	
4			10.5	10.5	.12	1.85	211	241	246	51	73	69	3	
5			14	12.9	.13	2.00	215	242	246	53	75	69	4	
6			17.5	15.7	.13	2.00	217	246	248	55	78	71	4	-.17
7			21	18.2	.13	2.00	218	249	246	55	78	71	4	
8			24.5	20.9	.11	1.69	219	247	246	55	80	73	3	
9			28	23.2	.10	1.55	219	249	248	56	81	73	3	
10			31.5	25.6	.09	1.38	218	252	249	56	83	74	3	
11			35	27.7	.08	1.20	217	258	245	56	81	73	2	
12			38.5	30.3	.07	1.06	217	266	234	54	80	73	2	
Stop		0933	42	32.025										

IMPINGERS	END	START	DIFF
1	248	150	98
2	165	150	15
3			
4			
5			
GEL	249	237	12

ORSAT	CO2	CO2+O2	O2
1	1.2	20.8	19.7
2	1.0	20.8	19.8
3	1.2	20.9	19.7

125

SSM
SPOTTS, STEVENS and McCOY, INC.
ENGINEERS • PLANNERS • SCIENTISTS

SPOTTS, STEVENS and McCOY, INC
AIR PROGRAMS

CLIENT: LEBANON CHEMICAL
W.O. NO.: 1250-000
PLANT: Baltimore
LOCATION: Stack

DATE: 11/20/91
RUN NO.: LC-5-2P
OPERATOR: DCW

POINT NO.	POINT DIS.	CLOCK TIME ACTUAL	CLOCK TIME RUN MIN.	METER CU. FT.	PITOT "H2O	ORIFICE "H2O	STACK TEMP. °F (5)	PROBE TEMP. °F (2)	FILTER TEMP. °F (3)	IMP. TEMP. °F (4)	METER TEMP. INLET °F (6)	METER TEMP. OUTLET °F (7)	PUMP VAC. "HG	Stack/10
B-1		0958	0.0	32.025	.08	1.20	200	220	221	65	76	75	2	
2			3.5	34.2	.08	1.20	197	218	223	56	76	74	2	
3			7	36.3	.09	1.38	196	215	233	56	77	74	2	
4			10.5	38.6	.08	1.20	195	214	246	57	79	75	2	
5			14	40.6	.08	1.20	212	210	246	58	79	75	2	
6			17.5	42.9	.08	1.20	213	218	243	58	79	75	2	
7			21	44.8	.07	1.06	214	221	246	58	79	75	2	
8			24.5	46.7	.07	1.06	214	235	250	59	80	75	2	-.13
9			28	—	.08	1.20	214	240	243	60	80	75	2	
10			31.5	50.6	.07	1.06	214	257	241	60	80	75	2	
11			35	52.6	.08	1.20	215	266	246	59	80	76	2	
12			38.5	54.5	.08	1.20	216	274	254	60	80	76	2	
Stop		1040	42	56.451										

COMMENTS: 53

5

SSM
SPOTTS, STEVENS and McCOY, INC
ENGINEERS • PLANNERS • SCIENTISTS

ANALYTICAL RESULTS

SSM /Laboratories

ANALYTICAL REPORT

CLIENT: Lebanon Chemical Corp.
2400 South Clinton St.
Baltimore MD 21224

PROJECT: 109813
PO NO:
REPORTED: 16-DEC-91
RECEIVED: 04-DEC-91
WORK ORDER: 1250-000

REPORT TO: D.J.Hofmann
SSM/Spotts Stevens and McCoy, Inc.

PROJECT DESCRIPTION: Part & H2SO4

SAMPLING DATE: - - BY: D.Wary/J.Jessel

UNITS RESULT

SAMPLE: 1038501
LC-S-1-SO2 (H2O2) 11/19-20/91
Sulfur dioxide

Run	Total Vol.(mls)	Ba(ClO4)2 (mls)	Aliq. (mls)	Normality
LC-S-1-SO2	360	0.60	10	0.01206

SAMPLE: 1038502
LC-S-1-SO2 (IPA) 11/19-20/91
Sulfur trioxide ml

Run	Total Vol.(mls)	Ba(ClO4)2 (mls)	Aliq. (mls)	Normality
LC-S-1-SO2	180	5.40	10	0.01206

SAMPLE: 1038504
LC-S-2-SO2 (H2O2) 11/19-20/91
Sulfur dioxide

Run	Total Vol.(mls)	Ba(ClO4)2 (mls)	Aliq. (mls)	Normality
LC-S-2-SO2	340	2.50	10	0.01206

SAMPLE: 1038505
LC-S-2-SO2 (IPA) 11/19-20/91
Sulfur trioxide ml

Run	Total Vol.(mls)	Ba(ClO4)2 (mls)	Aliq. (mls)	Normality
LC-S-2-SO2	210	0.80	10	0.01206

30 Noble Street ■ P.O. Box 6527 ■ Reading, PA 19611-0527 ■ 215/376-4595 or 215/376-6581 ■ Fax: 215/376-8522
Engineering Offices in Baltimore, Lehigh Valley, Reading and Trenton.

SSM /Laboratories

CLIENT: Lebanon Chemical Corp.
PROJECT: 109813

16-DEC-91

SAMPLE: 1038507
LC-S-3-SO2 (H2O2) 11/19-20/91
Sulfur dioxide

Run	Total Vol.(mls)	Ba(ClO4)2 (mls)	Aliq. (mls)	Normality
LC-S-3-SO2	300	1.80	10	0.01206

SAMPLE: 1038508
LC-S-3-SO2 (IPA) 11/19-20/91
Sulfur trioxide

Run	Total Vol.(mls)	Ba(ClO4)2 ml (mls)	Aliq. (mls)	Normality
LC-S-3-SO2	260	0.90	10	0.01206

Respectfully submitted,

Vaughan J. O'Neill

Vaughan J. O'Neill,
Group Leader, Physical Testing

30 Noble Street ■ P.O. Box 6527 ■ Reading, PA 19611-0527 ■ 215/376-4595 or 215/376-6581 ■ Fax: 215/376-8522
Engineering Offices in Baltimore, Lehigh Valley, Reading and Trenton.

02JAN92_0848_0895

SSM /Laboratories

ANALYTICAL REPORT

CLIENT: David Stuart
Lebanon Chemical Corp.
2400 South Clinton St.
Baltimore MD 21224

PROJECT: 110217
PO NO:
REPORTED: 02-JAN-92
RECEIVED: 30-DEC-91
WORK ORDER: 1250-000

REPORT TO: D.J.Hofmann
SSM/Spotts Stevens and McCoy, Inc.

SAMPLING DATE: 02-DEC-91 BY: Client

	UNITS	RESULT
SAMPLE: 1040074		
LC-S-1P		
Particulate Weight - Filter	mg	7.1
Particulate Weight - Wash Solutions Wt - Acetone Probe	mg	10.6
SAMPLE: 1040075		
LC-S-2P		
Particulate Weight - Filter	mg	9.7
Particulate Weight - Wash Solutions Wt - Acetone Probe	mg	12.6
SAMPLE: 1040076		
LC-S-3P		
Particulate Weight - Filter	mg	10.2
Particulate Weight - Wash Solutions Wt - Acetone Probe	mg	32.0

Respectfully submitted,

Vaughan J. O'Neill

Vaughan J. O'Neill,
Group Leader, Physical Testing

30 Noble Street ■ P.O. Box 6527 ■ Reading, PA 19611-0527 ■ 215/376-4595 or 215/376-6581 ■ Fax: 215/376-8522
Engineering Offices in Baltimore, Lehigh Valley, Reading and Trenton.

PROCESS DATA

Sixteen (16) tons per hour of 16-8-8 fertilizer were processed during the emissions testing program.

COMPUTER PRINTOUT

SPOTTS, STEVENS AND McCOY, INC
AIR PROGRAMS
ISOKINETIC SAMPLING ANALYSIS

Client: LEBANON CHEMICAL CO., INC Plant: BALTIMORE, MD

Unit Tested: GRANULATOR Pollutant: SULFURIC ACID MIST & FLOW

Sampling Location: EXHAUST STACK

DATE	11/19/91	11/20/91	11/20/91
RUN NUMBER	LC-S-1SO2	LC-S-2SO2	LC-S-3SO2
DN - NOZZLE DIAMETER, IN.	0.373	0.373	0.373
PB - BAROMETRIC PRESS, IN. OF H2O	30.24	30.24	30.24
TT - NET SAMPLING TIME, MIN.	84.0	84.0	84.0
VM - VOLUME METERED, ACF	65.903	52.626	52.592
TM - AVG. METER TEMP., DEG. F	78	80	84
PM - AVG. DELTA H, IN. OF H2O	1.913	1.219	1.180
Y - GAS METER CALIB. FACTOR	1.00	1.01	1.01
VMSTD - STD. GAS VOL., SCF	65.678	52.651	52.219
VW - TOTAL WATER COLLECTED, ML.	115	109	98
%M - PERCENT MOISTURE	7.6	7.5	8.1
MD - MOLE FRACTION DRY	0.92	0.91	0.92
%CO2 - PERCENT CO2 DRY	1.1	1.1	1.2
%O2 - PERCENT O2 DRY	19.7	19.7	19.6
MWD - DRY MOLECULAR WEIGHT	28.97	28.97	28.98
MW - WET MOLECULAR WEIGHT	28.13	28.00	28.09
%EA - PERCENT EXCESS AIR	1583.3	1704.3	1550.0
AS - STACK AREA, SQ. IN.	1,017.9	1,017.9	1,017.9
PST - STATIC PRESS., IN. OF H20	-0.19	-0.14	-0.12
TS - STACK TEMP., DEG. F	215	214	203
CP - PITOT COEFFICIENT	0.84	0.84	0.84
VS - STACK GAS VELOCITY, AFPM	1,355	1,106	1,084
QS - STACK GAS FLOW, DSCFM	7,016	5,657	5,687
QA - STACK GAS FLOW, ACFM	9,611	7,847	7,693
%I - ISOKINETIC RATIO	103.5	102.9	101.5
PPM, H2SO4	7.6	1.6	2.3
LBS/HR, H2SO4 EMISSIONS	0.81	0.14	0.20
mg/DSCM, H2SO4 EMISSIONS	0.9	0.2	0.3
PPM,SO2	1.1	5.4	3.5
LBS/HR, SO2 EMISSIONS	0.12	0.47	0.30

SSM
SPOTTS, STEVENS and McCOY, INC
ENGINEERS • PLANNERS • SCIENTISTS

SPOTTS, STEVENS AND McCOY, INC
AIR PROGRAMS
ISOKINETIC SAMPLING ANALYSIS

Client: LEBANON CHEMICAL CO., INC Plant: BALTIMORE, MD

Unit Tested: GRANULATOR Pollutant: SULFURIC ACID MIST & FLOW

Sampling Location: EXHAUST STACK

Run No: LC-S-1SO2 Date: 11/19/91 Start: 1428 End: 1621

DATA

DN:	0.373	PB:	30.24	PST:	-0.19	AS:	1,017.9
O2%:	19.7	CO2%:	1.1	N2%:	79.2	VW:	115
GAS METER Y-FACTOR:			1.00	E.A.%:	1583.3		

SAMPLE POINT	DISTANCE AT POINT	CLOCK TIME	TIME AT POINT	GAS METER	ELOCITY HEAD	PM ORIFICE	METER IN	TEMP. OUT	STACK TEMP.	SDE	VEL	O2	
B-12		1428	3.5	590.000	0.110	1.730	60	63	210	8.58	1,269	19.7	
11			3.5	592.600	0.100	1.590	63	63	212	8.20	1,211	19.6	
10			3.5	595.000	0.120	1.910	67	62	217	9.01	1,332	19.7	
9			3.5	597.000	0.110	0.173	70	62	218	8.64	1,276		
8			3.5	600.300	0.110	1.730	73	62	215	8.62	1,273		
7			3.5	602.800	0.120	1.910	75	64	211	8.97	1,326		
6			3.5	605.400	0.120	1.910	78	65	215	9.00	1,330		
5			3.5	608.100	0.110	1.730	80	65	218	8.64	1,276		
4			3.5	610.700	0.120	1.910	85	67	220	9.03	1,335		
3			3.5	613.400	0.110	1.730	87	69	222	8.66	1,280		
2			3.5	616.000	0.120	1.910	90	70	221	9.04	1,336		
1			3.5	618.700	0.110	1.730	92	70	218	8.64	1,276		
A-12			3.5	621.308	0.110	1.730	70	70	212	8.60	1,271		
11			3.5	623.900	0.120	1.910	75	71	218	9.02	1,333		
10			3.5	626.700	0.130	2.050	82	72	220	9.40	1,389		
9			3.5	629.400	0.120	1.910	88	72	215	9.00	1,330		
8			3.5	632.300	0.140	2.200	90	74	212	9.70	1,433		
7			3.5	635.100	0.150	2.390	94	75	210	10.02	1,481		
6			3.5	638.200	0.150	2.390	98	76	214	10.05	1,486		
5			3.5	641.200	0.160	2.530	102	78	215	10.39	1,536		
4			3.5	644.300	0.140	2.200	104	79	212	9.70	1,433		
3			3.5	647.100	0.150	2.390	106	80	216	10.07	1,488		
2			3.5	650.100	0.140	2.200	106	81	211	9.69	1,432		
1			3.5	653.100	0.130	2.050	105	82	208	9.32	1,377		
		1621		655.903									
RESULTS			TT	VM	PIT	PM		TM	TS	SDE	VEL	O2	
			84.0	65.903	0.126	1.913		78	215	9.17	1,355	19.7	
			net	net	avg	avg		avg	avg	avg	avg	avg	

PSM=	30.38	VMSTD=	65.678	VWGAS=	5.417	%M=	7.6	RMS OF VELOCITIES =	6.3
MD=	0.92	MWD=	28.97	MW=	28.13	PS=	30.23		

STACK GAS VELOCITY =	1,355	AFPM
STACK GAS VOLUME =	7,016	DSCFM
STACK GAS VOLUME =	9,611	ACFM
STACK GAS VOLUME =	3.30E+04	LBS/HR
ISOKINETIC RATIO =	103.5	

SULFUR OXIDE EMISSIONS

	LB/DSCF	PPM	LBS/HR	mg/DSCM
H2SO4 =	1.93E-06	7.6	0.81	0.9
SO2 =	2.80E-07	1.1	0.12	

SSM
SPOTTS, STEVENS and McCOY, INC
ENGINEERS • PLANNERS • SCIENTISTS

SPOTTS, STEVENS AND McCOY, INC
AIR PROGRAMS
ISOKINETIC SAMPLING ANALYSIS

Client: LEBANON CHEMICAL CO., INC Plant: BALTIMORE, MD

Unit Tested: GRANULATOR Pollutant: SULFURIC ACID MIST & FLOW

Sampling Location: EXHAUST STACK

Run No: LC-S-2902 Date: 11/20/91 Start: 850 End: 1038

DATA

DN:	0.373	PB:	30.24	PST:	-0.14	AS:	1,017.9
O2%:	19.7	CO2%:	1.1	N2%:	79.1	VW:	109
GAS METER Y-FACTOR:			1.01	E.A.%:	1704.3		

SAMPLE POINT	DISTANCE AT POINT	CLOCK TIME	TIME AT POINT	GAS METER	ELOCITY HEAD	PM ORIFICE	METER IN	TEMP. OUT	STACK TEMP.	SDE	VEL	O2	
B-12		850	3.5	665.402	0.100	1.480	65	64	220	8.25	1,221	19.7	
11			3.5	667.800	0.080	1.180	69	65	215	7.35	1,089	19.8	
10			3.5		0.100	1.480	74	66	212	8.20	1,214	19.7	
9			3.5	672.300	0.080	1.180	79	68	214	7.34	1,088		
8			3.5		0.070	1.010	82	69	218	6.89	1,020		
7			3.5	676.500	0.090	1.300	86	70	213	7.78	1,153		
6			3.5	678.700	0.090	1.300	89	73	209	7.76	1,149		
5			3.5	680.900	0.100	1.480	90	74	214	8.21	1,216		
4			3.5	683.300	0.100	1.480	94	76	213	8.20	1,215		
3			3.5	685.700	0.090	1.300	97	79	209	7.76	1,149		
2			3.5	688.100	0.080	1.180	96	80	218	7.36	1,091		
1			3.5	690.300	0.070	1.010	96	81	220	6.90	1,022		
A-12			3.5	692.346	0.070	1.010	78	78	222	6.91	1,023		
11			3.5	694.400	0.080	1.180	79	79	219	7.37	1,092		
10			3.5	696.600	0.100	1.480	82	79	221	8.25	1,222		
9			3.5	699.000	0.060	0.870	85	79	211	6.35	940		
8			3.5	700.800	0.060	0.870	86	79	208	6.33	938		
7			3.5	702.400	0.050	0.720	86	79	217	5.82	862		
6			3.5	704.500	0.080	1.180	86	79	209	7.32	1,084		
5			3.5	706.600	0.080	1.180	87	80	212	7.33	1,086		
4			3.5	708.800	0.090	1.300	88	80	204	7.73	1,145		
3			3.5	711.000	0.100	1.480	89	80	214	8.21	1,216		
2			3.5	713.400	0.090	1.300	89	80	220	7.82	1,159		
1			3.5	715.800	0.090	1.300	89	80	207	7.75	1,148		
		1038		718.028									
RESULTS			TT	VM	PIT	PM		TM	TS	SDE	VEL	O2	
			84.0	52.626	0.085	1.219		80	214	7.47	1,106	19.7	
			net	net	avg	avg		avg	avg	avg	avg	avg	

PSM=	30.33	VMSTD=	52.651	VWGAS=	5.134	%M=	8.9	RMS OF VELOCITIES =	8.8
MD=	0.91	MWD=	28.97	MW=	28.00	PS=	30.23		

STACK GAS VELOCITY =	1,106	AFPM
STACK GAS VOLUME =	5,657	DSCFM
STACK GAS VOLUME =	7,847	ACFM
STACK GAS VOLUME =	2.68E+04	LBS/HR
ISOKINETIC RATIO =	102.9	

SULFUR OXIDE EMISSIONS

		LB/DSCF	PPM	LBS/HR	mg/DSCM
H2SO4 =		4.16E-07	1.6	0.14	0.2
SO2 =		1.37E-06	5.4	0.47	

SSM
SPOTTS, STEVENS and McCOY, INC
ENGINEERS • PLANNERS • SCIENTISTS

SPOTTS, STEVENS AND McCOY, INC
AIR PROGRAMS
ISOKINETIC SAMPLING ANALYSIS

Client: LEBANON CHEMICAL CO., INC Plant: BALTIMORE, MD

Unit Tested: GRANULATOR Pollutant: SULFURIC ACID MIST & FLOW

Sampling Location: EXHAUST STACK

Run No: LC-S-3SO2 Date: 11/20/91 Start: 1224 End: 1406

DATA

DN:	0.373	PB:	30.24	PST:	-0.12	AS:	1,017.9
O2%:	19.6	CO2%:	1.2	N2%:	79.2	VW:	96
GAS METER Y-FACTOR:			1.01	E.A.%:	1550.0		

SAMPLE POINT	DISTANCE AT POINT	CLOCK TIME	TIME AT POINT	GAS METER	ELOCITY HEAD	PM ORIFICE	METER IN	TEMP. OUT	STACK TEMP.	SDE	VEL	O2	
A-12		1224	3.5	730.000	0.060	0.860	78	78	200	6.29	931	19.6	
11			3.5	731.800	0.060	0.860	79	78	201	6.30	931	19.6	
10			3.5	733.700	0.050	0.700	81	78	197	5.73	848	19.7	
9			3.5	735.500	0.070	1.000	83	79	190	6.75	998		
8			3.5	737.400	0.060	0.860	85	79	189	6.24	923		
7			3.5	739.400	0.070	1.000	87	80	203	6.81	1,007		
6			3.5	741.400	0.070	1.000	89	80	208	6.84	1,011		
5			3.5	743.500	0.090	1.300	91	81	211	7.77	1,149		
4			3.5	745.900	0.100	1.480	93	82	213	8.20	1,213		
3			3.5	748.700	0.090	1.300	94	82	212	7.78	1,150		
2			3.5	750.500	0.080	1.160	93	82	211	7.33	1,084		
1			3.5	752.900	0.090	1.300	92	83	211	7.77	1,149		
B-1			3.5	755.041	0.080	1.150	80	80	180	7.16	1,058		
2			3.5		0.080	1.150	83	80	183	7.17	1,061		
3			3.5	759.400	0.090	1.300	86	80	191	7.65	1,132		
4			3.5	761.800	0.080	1.150	89	80	197	7.25	1,072		
5			3.5	763.900	0.090	1.300	90	81	207	7.75	1,146		
6			3.5	766.300	0.100	1.470	91	81	212	8.20	1,212		
D-1			3.5	768.700	0.080	1.150	92	81	213	7.34	1,085		
2			3.5	771.000	0.090	1.300	92	82	215	7.79	1,153		
3			3.5	773.200	0.100	1.470	92	82	215	8.22	1,215		
4			3.5		0.100	1.470	92	82	214	8.21	1,214		
5			3.5	778.000	0.090	1.300	93	83	202	7.72	1,141		
6			3.5	780.400	0.090	1.300	93	83	198	7.70	1,138		
		1406		782.592									
RESULTS			TT	VM	PIT	PM		TM	TS	SDE	VEL	O2	
			84.0	52.592	0.083	1.180		84	203	7.33	1,084	19.6	
			net	net	avg	avg		avg	avg	avg	avg	avg	

PSM=	30.33	VMSTD=	52.219	VWGAS=	4.616	%M=	8.1	RMS OF VELOCITIES =	9.3
MD=	0.92	MWD=	28.98	MW=	28.09	PS=	30.23		

STACK GAS VELOCITY =	1,084	AFPM
STACK GAS VOLUME =	5,687	DSCFM
STACK GAS VOLUME =	7,693	ACFM
STACK GAS VOLUME =	2.68E+04	LBS/HR
ISOKINETIC RATIO =	101.5	

SULFUR OXIDE EMISSIONS

		LB/DSCF	PPM	LBS/HR	mg/DSCM
H2SO4 =		5.84E-07	2.3	0.20	0.3
SO2 =		8.81E-07	3.5	0.30	

SSM
SPOTTS, STEVENS and McCOY, INC
ENGINEERS • PLANNERS • SCIENTISTS

SPOTTS, STEVENS & McCOY, INC
AIR PROGRAMS
SAMPLING SUMMARY SHEET

Client:	LEBANON CHEMICAL CO., INC	Plant:	BALTIMORE, MD
Unit Tested:	GRANULATOR	Pollutant:	PARTICULATE & FLOW
Sampling Location:	EXHAUST STACK	W.O. NO.:	1245-005

DATE	11/19/91	11/20/91	11/20/91
RUN NUMBER	LC-S-1P	LC-S-2P	LC-S-3P
DN - NOZZLE DIAMETER, IN.	0.370	0.370	0.370
PB - BAROMETRIC PRESS, IN. OF HG.	30.24	30.22	30.24
TT - NET SAMPLING TIME, MIN.	84.0	84.0	84.0
VM - VOLUME METERED, ACF	70.785	53.144	51.903
TM - AVG. METER TEMP., DEG. F	70	75	84
PM - AVG. DELTA H, IN. OF H2O	2.473	1.396	1.270
Y - GAS METER CALIB. FACTOR	1.01	1.01	1.01
VMSTD - STD. GAS VOL., SCF	72.373	53.678	51.570
VW - TOTAL WATER COLLECTED, ML.	153	125	128
%M - PERCENT MOISTURE	9.1	9.9	10.5
MD - MOLE FRACTION DRY	0.91	0.90	0.90
%CO2 - PERCENT CO2 DRY	1.1	1.1	1.2
%O2 - PERCENT O2 DRY	19.7	20.9	19.6
MWD - DRY MOLECULAR WEIGHT	28.97	29.02	28.98
MW - WET MOLECULAR WEIGHT	27.97	27.93	27.83
%EA - PERCENT EXCESS AIR	1583.3	6597.2	1550.0
AS - STACK AREA, SQ. IN.	1,017.9	1,017.9	1,017.9
PST - STATIC PRESS., IN. OF H20	-0.21	-0.15	-0.14
TS - STACK TEMP., DEG. F	210	210	208
CP - PITOT COEFFICIENT	0.84	0.84	0.84
VS - STACK GAS VELOCITY, FPM	1,495	1,156	1,109
QS - STACK GAS FLOW, DSCFM	7,675	5,884	5,628
QA - STACK GAS FLOW, ACFM	10,605	8,204	7,871
%I - ISOKINETIC RATIO	106.0	102.5	103.0
GR/DSCF, LOADING	0.004	0.006	0.013
LBS/HR, EMISSIONS	0.25	0.32	0.61
AVG. GR/DSCF EMISSION RATE		0.008	

SSM
SPOTTS, STEVENS and McCOY, INC
ENGINEERS • PLANNERS • SCIENTISTS

SPOTTS, STEVENS AND McCOY, INC
AIR PROGRAMS
ISOKINETIC SAMPLING ANALYSIS

Client: LEBANON CHEMICAL CO., INC Plant: BALTIMORE, MD

Unit Tested: GRANULATOR Pollutant: PARTICULATE & FLOW

Sampling Location: EXHAUST STACK W.O. NO.: 1250-000

Run No: LC-S-1P Date: 11/19/91 Start: 1429 End: 1622

DATA

DN:	0.370	PB:	30.24	PST:	-0.21	AS:	1,017.9
O2%:	19.7	CO2%:	1.1	N2%:	79.2	VW:	153
GAS METER Y-FACTOR:			1.01	E.A.%:	1583.3		

SAMPLE POINT	DISTANCE AT POINT	CLOCK TIME	TIME AT POINT	GAS METER	VELOCITY HEAD	PM ORIFICE	METER TEMPERATURE IN	OUT	STACK TEMP.	SDE	VEL	O2	
A-1		1429	3.5	930.711	0.150	2.460	62	63	192	9.89	1,466	19.7	
2			3.5	933.700	0.150	2.460	64	63	195	9.91	1,469	19.6	
3			3.5	937.000	0.160	2.600	65	63	197	10.25	1,519	19.7	
4			3.5	939.400	0.160	2.600	67	63	207	10.33	1,531		
5			3.5	943.000	0.160	2.600	68	63	211	10.36	1,536		
6			3.5	945.700	0.170	2.800	69	63	215	10.71	1,587		
7			3.5	948.800	0.180	2.950	71	64	219	11.06	1,638		
8			3.5	951.900	0.180	2.950	73	65	221	11.07	1,641		
9			3.5	955.200	0.160	2.560	74	65	221	10.44	1,547		
10			3.5	958.000	0.160	2.560	77	66	219	10.42	1,545		
11			3.5	961.300	0.150	2.430	77	67	220	10.10	1,497		
12			3.5	964.100	0.150	2.430	79	68	220	10.10	1,497		
B-1			3.5	966.990	0.120	1.950	68	67	190	8.83	1,309		
2			3.5	969.800	0.130	2.100	69	67	191	9.20	1,363		
3			3.5	972.800	0.140	2.270	72	68	193	9.56	1,417		
4			3.5	975.000	0.150	2.450	74	68	205	9.99	1,480		
5			3.5		0.150	2.450	76	69	209	10.02	1,485		
6			3.5	980.900	0.160	2.600	78	69	211	10.36	1,536		
7			3.5	984.100	0.160	2.600	80	70	215	10.39	1,540		
8			3.5	987.000	0.150	2.450	81	70	217	10.08	1,493		
9			3.5	989.900	0.150	2.450	82	71	218	10.08	1,494		
10			3.5	992.800	0.140	2.270	83	72	220	9.76	1,446		
11			3.5	995.600	0.140	2.270	83	71	220	9.76	1,446		
12			3.5	999.000	0.130	2.100	82	71	220	9.40	1,393		
		1622		1001.496									
RESULTS			TT	VM	PIT	PM		TM	TS	SDE	VEL	O2	
			84.0	70.785	0.153	2.473		70	210	10.09	1,495	19.7	
			net	net	avg	avg		avg	avg	avg	avg	avg	

PSM= 30.42 VMSTD= 72.373 VWGAS= 7.206 %M= 9.1 RMS OF VELOCITIES = 5.1
MD= 0.91 MWD= 28.97 MW= 27.97 PS= 30.22

STACK GAS VELOCITY =	1,495	FPM
STACK GAS VOLUME =	7,675	DSCFM
STACK GAS VOLUME =	10,605	ACFM
STACK GAS VOLUME =	3.64E+04	LBS/HR
ISOKINETIC RATIO =	106.0	

EMISSIONS		
Weight, mg =	17.70	
GR/DSCF =	0.004	
LBS/HR =	0.25	

REV.1(11/22/91)

SSM
SPOTTS, STEVENS and McCOY, INC
ENGINEERS • PLANNERS • SCIENTISTS

SPOTTS, STEVENS AND McCOY, INC
AIR PROGRAMS
ISOKINETIC SAMPLING ANALYSIS

Client: LEBANON CHEMICAL CO., INC Plant: BALTIMORE, MD

Unit Tested: GRANULATOR Pollutant: PARTICULATE & FLOW

Sampling Location: STACK W.O. NO.: 1250-000

Run No: LC-S-2P Date: 11/20/91 Start: 851 End: 1040

DATA

DN:	0.370	PB:	30.22	PST:	-0.15	AS:	1,017.9
O2%:	20.9	CO2%:	1.1	N2%:	78.0	VW:	125
GAS METER Y-FACTOR:			1.01	E.A.%:	6597.2		

SAMPLE POINT	DISTANCE AT POINT	CLOCK TIME	TIME AT POINT	GAS METER	VELOCITY HEAD	PM ORIFICE	METER TEMPERATURE IN	METER TEMPERATURE OUT	STACK TEMP.	SDE	VEL	O2	
A-1		851	3.5	3.307	0.090	1.380	67	67	189	7.84	1,134	20.8	
2			3.5	5.600	0.110	1.690	68	67	191	8.46	1,255	20.8	
3			3.5	8.200	0.100	1.550	71	68	202	8.14	1,207	20.9	
4			3.5	10.500	0.120	1.850	73	69	211	8.97	1,331		
5			3.5	12.900	0.130	2.000	75	69	215	9.37	1,390		
6			3.5	15.700	0.130	2.000	78	71	217	9.38	1,392		
7			3.5	18.200	0.130	2.000	78	71	218	9.39	1,393		
8			3.5	20.900	0.110	1.690	80	73	219	8.64	1,282		
9			3.5	23.200	0.100	1.550	81	73	219	8.24	1,222		
10			3.5	25.600	0.090	1.380	83	74	218	7.81	1,159		
11			3.5	27.700	0.080	1.200	81	73	217	7.36	1,092		
12			3.5	30.300	0.070	1.060	80	73	217	6.88	1,021		
B-1			3.5	32.025	0.080	1.200	76	75	200	7.27	1,078		
2			3.5	34.200	0.080	1.200	76	74	197	7.25	1,076		
3			3.5	36.300	0.090	1.380	77	74	196	7.68	1,140		
4			3.5	38.600	0.080	1.200	79	75	195	7.24	1,074		
5			3.5	40.600	0.080	1.200	79	75	212	7.33	1,088		
6			3.5	42.900	0.080	1.200	79	75	213	7.34	1,089		
7			3.5	44.800	0.070	1.060	79	75	214	6.87	1,019		
8			3.5	46.700	0.070	1.060	80	75	214	6.87	1,019		
9			3.5		0.080	1.200	80	75	214	7.34	1,089		
10			3.5	50.600	0.070	1.060	80	75	214	6.87	1,019		
11			3.5	52.600	0.080	1.200	80	76	215	7.35	1,090		
12			3.5	54.500	0.080	1.200	80	76	216	7.35	1,091		
		1040		56.451									
RESULTS			TT	VM	PIT	PM		TM	TS	SDE	VEL	O2	
			84.0	53.144	0.091	1.396		75	210	7.79	1,156	20.8	
			net	net	avg	avg		avg	avg	avg	avg	avg	

PSM=	30.32	VMSTD=	53.678	VWGAS=	5.888	%M=	9.9	RMS OF VELOCITIES =	10.5
MD=	0.90	MWD=	29.02	MW=	27.93	PS=	30.21		

STACK GAS VELOCITY =	1,156	FPM
STACK GAS VOLUME =	5,884	DSCFM
STACK GAS VOLUME =	8,204	ACFM
STACK GAS VOLUME =	2.81E+04	LBS/HR
ISOKINETIC RATIO =	102.5	

EMISSIONS		
Weight, mg =	22.30	
GR/DSCF =	0.006	
LBS/HR =	0.32	

REV.1(11/22/91)

Is PSM = Absolute stack gas pressure in inches Hg ?

= Pressure of meter

Pressure of meter = BP + Pm/13.6

SSM
SPOTTS, STEVENS and McCOY, INC
ENGINEERS • PLANNERS • SCIENTISTS

SPOTTS,STEVENS & McCOY, INC.
AIR PROGRAMS
METER BOX CALIBRATION

METER BOX NUMBER: 80445 DATE: 12/4/91

CALIBRATED BY: WARY BAROMETRIC PRESSURE: 29.80

ORIFICE MANOMETER SETTING (delta H) IN. H2O	WET GAS METER (Vn) cu. ft.	DRY TEST METER (Vd) cu. ft.	WET TEST METER (Tw) deg. F	INLET (Tdi) deg. F	OUTLET (Tdo) deg. F	AVERAGE (Td) deg. F	TIME min.	YI	delta H@I
0.5	5.183	5.102	70	70.5	69.5	70.0	12.97	1.01	1.83
1.0	5.072	5.007	70	74.5	72	73.3	9.17	1.02	1.91
1.5	10.176	10.109	69	77	73.5	75.3	15.10	1.01	1.92
2.0	10.381	10.405	70	83	76	79.5	13.48	1.01	1.94
3.0	10.171	10.304	71.5	87	79	83.0	10.87	1.00	1.95
4.0	10.459	10.705	72	91.5	81	86.3	9.78	0.99	1.96

FORMULAS:

$$YI = \frac{(Vw)(BP)(Td+460)}{(Vd)(BP+(H/13.6)(Tw+460)}$$

$$Qm = \frac{(Vd)(Tdo+460)}{(Time)(Td+460)}$$

$$Km = Qm \sqrt{\frac{(BP)(29)}{(Tdo+460)(delta\ H)}}$$

$$delta\ H@I = \frac{0.921}{(Km)(Km)}$$

SSM
SPOTTS, STEVENS and McCOY, INC
ENGINEERS • PLANNERS • SCIENTISTS

SPOTTS,STEVENS & McCOY, INC.
AIR PROGRAMS
METER BOX CALIBRATION

METER BOX NUMBER: 80445

DATE: 11/12/91

CALIBRATED BY: WARY

BAROMETRIC PRESSURE: 29.66

ORIFICE MANOMETER SETTING (delta H) IN. H2O	WET GAS METER (Vn) cu. ft.	DRY TEST METER (Vd) cu. ft.	WET TEST METER (Tw) deg. F	INLET (Tdi) deg. F	OUTLET (Tdo) deg. F	AVERAGE (Td) deg. F	TIME min.	YI	delta H@I
0.5	5.140	5.079	72.5	73.5	72	72.8	12.85	1.01	1.83
1.0	5.192	5.150	73	76.5	74.5	75.5	9.53	1.01	1.97
1.5	10.334	10.303	73	81.5	77	79.3	15.28	1.01	1.91
2.0	10.065	10.117	74	86.5	79.5	83.0	13.02	1.01	1.94
3.0	10.193	10.348	73.5	88.5	81.5	85.0	10.88	1.00	1.95
4.0	10.047	10.299	73.5	90.5	83	86.8	9.43	0.99	1.98

FORMULAS:

$$YI = \frac{(Vw)(BP)(Td+460)}{(Vd)(BP+(H/13.6)(Tw+460)}$$

$$Qm = \frac{(Vd)(Tdo+460)}{(Time)(Td+460)}$$

$$Km = Qm \sqrt{\frac{(BP)(29)}{(Tdo+460)(delta\ H)}}$$

$$delta\ H@I = \frac{0.921}{(Km)(Km)}$$

SSM
SPOTTS, STEVENS and McCOY, INC
ENGINEERS • PLANNERS • SCIENTISTS

PROJECT PARTICIPANTS

Test Observer:	Mr. S. Joe Ray MD Department of the Environment		
SSM Personnel:	Donald Wary	-	Team Leader
	Jeffery Jessell	-	Technician
	William Harmuth	-	Technician

STANDARD TEST METHODS

The test procedures utilized are found in the Sampling and Analysis Procedures section of this report.