Note: This is a reference cited in *AP 42, Compilation of Air Pollutant Emission Factors, Volume I Stationary Point and Area Sources.* AP42 is located on the EPA web site at www.epa.gov/ttn/chief/ap42/

The file name refers to the reference number, the AP42 chapter and section. The file name "ref02_c01s02.pdf" would mean the reference is from AP42 chapter 1 section 2. The reference may be from a previous version of the section and no longer cited. The primary source should always be checked.

AP42 Section: 7.1

Background Chapter 5

Reference: 8

Title: Hydrocarbon Emissions Floating Roof Petroleum Tanks

Engineering Science, Inc., prepared for Western Oil and Gas Association,

Los Angeles, CA,

January 1977

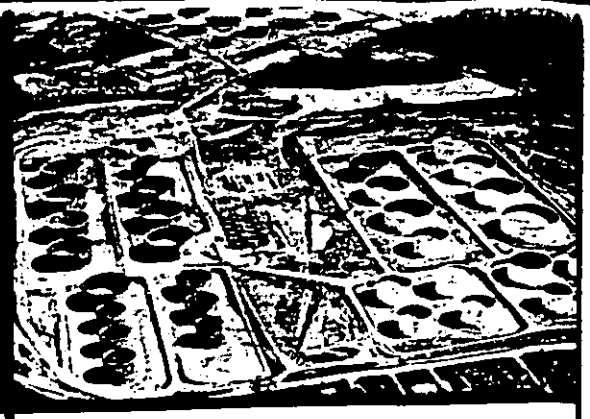

HYDROCARBON EMISSIONS FROM FLOATING ROOF PETROLEUM TANKS

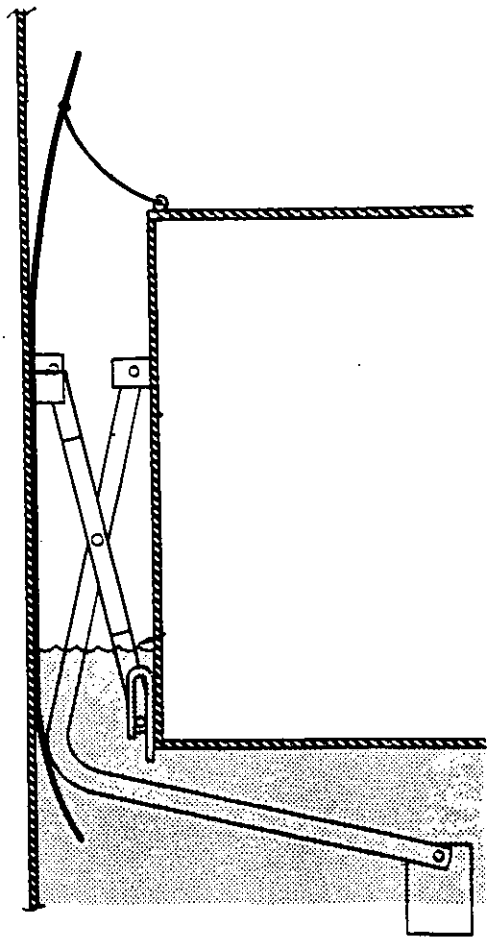

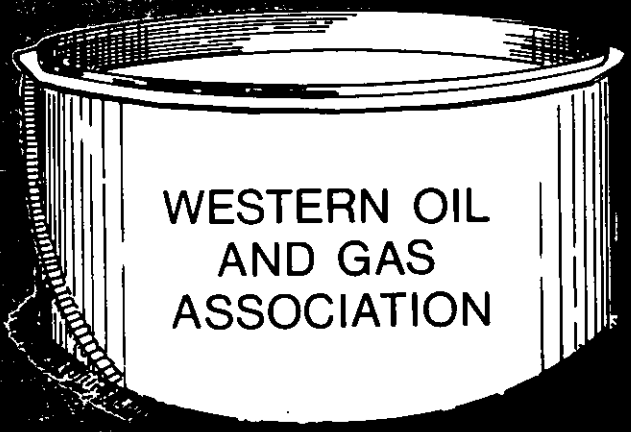

ENGINEERING-SCIENCE, INC.

HYDROCARBON EMISSIONS FROM FLOATING-ROOF STORAGE TANKS

PREPARED FOR

THE WESTERN OIL AND GAS ASSOCIATION
609 SOUTH GRAND AVENUE
LOS ANGELES, CALIFORNIA 91107

JANUARY 1977

SUBMITTED BY

ENGINEERING-SCIENCE, INC.
150 NORTH SANTA ANITA AVENUE
ARCADIA, CALIFORNIA 91006

FOREWORD

The relationship of hydrocarbon emissions to the photochemical oxidant pollution problems of many urban areas of the United States is not well understood. Still, many regulatory agencies have taken the position that hydrocarbon emissions from all sources should be reduced in order to minimize the extent of the oxidant problem.

With regard to hydrocarbon emissions from floating-roof storage tanks, the only basis available to the regulatory agencies for estimating such emissions at the present time is a document published by the American Petroleum Institute in February, 1962 entitled, "API Bulletin on Evaporation Loss From Floating-Roof Tanks" and identified as API-2517. The Western Oil and Gas Association undertook this investigation to measure actual hydrocarbon losses from several tanks and to determine whether or not the API equation properly estimated hydrocarbon emissions from floating-roof storage tanks; these objectives were met. It is hoped that this report will serve as a useful guide to the regulatory agencies - and to others - in determining the need for and the direction of future research concerning hydrocarbon emissions from floating-roof storage tanks.

ACKNOWLEDGMENTS

The Western Oil and Gas Association (WOGA) contracted with Engineering-Science, Inc. (ES), for this evaluation of hydrocarbon emissions from floating-roof storage tanks in July, 1976. Chairmen of WOGA committees who conceived and approved this project were:

Dr. Carleton B. Scott, Chairman, WOGA Environmental Conservation Committee (ECC), Union Oil Company of California.

Mr. William B. Harrell, Chairman, WOGA Project Coordinating Subcommittee, Mobil Oil Corporation.

While the ECC has overall responsibility for WOGA's environmental programs, specific projects such as this one are carried out under the direction of appointed task groups of engineers and scientists, each possessing qualifications in some phase of the subject under consideration. WOGA directed and monitored this project through the following specially appointed task force:

Name	Organization
Peter E. Jonker, Chairman	Union Oil Company of California
William J. Porter	Chevron U.S.A. Incorporated
Dr. Robert L. Russell	Union Oil Research
Peter L. Mehta	Atlantic Richfield Company
Earl K. Dewey, Jr.	Continental Oil Company
Jerry Adams	Fletcher Oil Refining Company
John A. Glaser	Gulf Oil Company, U.S.
Richard A. O'Hare	Shell Oil Company
Gordon J. Good	Standard Oil Company of Ohio
Robert M. Stoneham	Texaco, Incorporated
Hayden H. Jones	Union Oil Company of California

The successful completion of this project was partially ensured by the unbiased efforts and open dialogue of several engineers and scientists from the air pollution control agencies. Open meetings were held monthly to discuss progress and all ideas voiced by these participants were fully considered within the limits of established time and budget constraints. The following organizations were represented at different times and by different individuals throughout the course of this investigation:

Environmental Protection Agency
Research Triangle Park, North Carolina

Environmental Protection Agency
Region IX, San Francisco

California Air Resources Board
Sacramento, California

Southern California Air Pollution Control District
Los Angeles, California

San Diego Air Pollution Control District
San Diego, California

Suggestions and ideas also were provided by:

American Petroleum Institute
Committee on Evaporative Loss Measurements
Washington, D.C.

Supporting Engineering-Science, Inc. in special technical areas were:

Dr. W. L. Faith, Consulting Engineer
San Marino, California

Analytical Research Laboratories
Monrovia, California

The Project Manager for this investigation was Mr. A. L. Wilson, and the Technical Director was Mr. M. Dean High, Vice President, Engineering-Science, Inc. To all who contributed to this study and preparation of this report, Engineering-Science, Inc. extends its sincere appreciation.

TABLE OF CONTENTS

		Page
FOREWORD		i
ACKNOWLEDGMENT		ii
CHAPTER I	EXECUTIVE SUMMARY	I-1
CHAPTER II	CONCLUSIONS	II-1
CHAPTER III	INTRODUCTION	III-1
	Background	III-1
	Objective	III-2
	Scope	III-3
	Methodology	III-5
CHAPTER IV	STATIC STORAGE HYDROCARBON EMISSION MEASUREMENTS	IV-1
	Sample Collection Procedure	IV-2
	Laboratory Procedure	IV-3
	Evaluation of Potential Stratification in the Tanks	IV-9
	Effects of Water, Temperature and Flashing Time	IV-14
	Exclusion of Certain Tanks	IV-15
	Density Measurements	IV-15
CHAPTER V	CORRELATION OF EMISSIONS WITH MEASURED PARAMETERS	V-1
	General	V-1
	Comparisons with API Equation	V-3
	Correlation With Measured Parameters	V-6
CHAPTER VI	FURTHER DISCUSSION OF SIGNIFICANT PARAMETERS	VI-1
CHAPTER VII	BEST AVAILABLE SEAL TECHNOLOGY	VII-1
	General	VII-1
	Survey of Available Seals	VII-2
	Primary Seals	VII-2
	Secondary Seals	VII-8
	Seal and Tank Accessories	VII-12
	Survey of Installed Seals with Respect to Gap Size	VII-19
	Discussion of Results	VII-28
CHAPTER VIII	RECOMMENDATIONS	VIII-1
CHAPTER IX	BIBLIOGRAPHY	IX-1
APPENDICES	UNDER SEPARATE COVER	

LIST OF FIGURES

No.	Title	Page
1-1	Description of 13 Floating-Roof Tanks Used in the Study (Excludes Union No. 5 and 3 Crude Oil Tanks)	I-2
IV-1	Example Density-Evaporation Curve, Arco #134, September 8, 1976.	IV-7
IV-2	Summary of Tank Test (Union)	IV-10
IV-3	Summary of Tank Test (Texaco)	IV-11
IV-4	Change in Stock Density with Time	IV-16
IV-5	Change in Stock Density with Time	IV-17
IV-6	Change in Stock Density with Time	IV-18
IV-7	Change in Stock Density with Time	IV-19
V-1	Comparison of API Calculated and Measured Emission Rates	V-5
V-2	Hydrocarbon Emission Rate as a Function of Reid Vapor Pressure and Tank Diameter	V-7
V-3	Hydrocarbon Emission Rate as a Function of Average Wind Speed and Average Ambient Temperature	V-8
V-4	Hydrocarbon Emission Rate as a Function of Seal Gap Area and Number of Gaps	V-9
V-5	Hydrocarbon Emission Rate Compared to Age of Primary Seal	V-10
V-6	Standard 192-Comparison of Wind Speed and Stock Temperature to Change in Density	V-13
VII-1	Weight Assisted Metallic Shoe Seal	VII-3
VII-2	SR-7 Horton Fabric Seal (Resilient Type) for Horton Floating Roofs	VII-5
VII-3	PDM Tubeseal System	VII-6
VII-4	Kisseal	VII-7
VII-5	Thetachron Tank	VII-9
VII-6	Secondary Wiper Seal	VII-10
VII-7	Ultraflote Wiper	VII-11
VII-8	Pacific Erectors Mini Bag	VII-13
VII-9	Atlas Mini Bag	VII-14
VII-10	Trico Mini Bag	VII-15
VII-11	Trico Wiper	VII-16
VII-12	Maloney Secondary Tank Seal	VII-17
VII-13	Spring Assisted Mechanism	VII-18

LIST OF TABLES

No.	Title	Page
III-1	Description of Floating-Roof Tanks Used for Study	III-4
IV-1	Tentative Method for Determining Evaporation Losses by Change in Stock Density	IV-4
	Density and Specific Gravity of Liquids by Bingham Pycnometer	IV-4
IV-2	Example Depth Stratification Results	IV-12
IV-3	A Comparison of Density Measurements Wide Mouth Bottles Versus Small Mouth Bottles	IV-13
IV-4	Field Measurement Summary (Arco)	IV-21
IV-5	Field Measurement Summary (Exxon)	IV-22
IV-6	Field Measurement Summary (Gulf)	IV-23
IV-7	Field Measurement Summary (Lion)	IV-24
IV-8	Field Measurement Summary (Mobil)	IV-25
IV-9	Field Measurement Summary (Shell)	IV-26
IV-10	Field Measurement Summary (Shell)	IV-27
IV-11	Field Measurement Summary (Standard)	IV-28
IV-12	Field Measurement Summary (Standard)	IV-29
IV-13	Field Measurement Summary (Standard)	IV-30
IV-14	Field Measurement Summary (Standard)	IV-31
IV-15	Field Measurement Summary (Standard	IV-32
IV-16	Field Measurement Summary (Texaco)	IV-33
IV-17	Field Measurement Summary (Texaco)	IV-34
IV-18	Field Measurement Summary (Union)	IV-35
IV-19	Field Measurement Summary (Union)	IV-36
IV-20	Field Measurement Summary (Union)	IV-37
IV-21	Measured Emission Rate	IV-38
V-1	Standing Storage Loss Emissions Summary	V-2
V-2	API-2517 Calculated Versus Observed Hydrocarbon Emissions	V-4
V-3	Comparison of Measured Gaps Versus Allowable Gaps on Test Tanks	V-14
VI-1	Comparison of Engineering-Science Field Test Variables to API-2517 Equation Variables	VI-2
VII-1	Performance of Seals on Floating-Roof Tanks (W)	VII-20
VII-2	Performance of Seals on Floating-Roof TAnks (R)	VII-24

CHAPTER I

EXECUTIVE SUMMARY

CHAPTER I

EXECUTIVE SUMMARY

For the past 15 years or so, API Bulletin 2517 has been used to estimate hydrocarbon losses from floating-roof storage tanks. In recent years, much attention has been focussed on the sources of hydrocarbons and the regulatory agencies have pushed all sources for application of the best available control technology. In the case of floating-roof tanks, no recent measurement data existed on the hydrocarbon losses associated with different tanks, seals, stock contents, or weather parameters.

This investigation was initiated primarily to provide current hydrocarbon emission data on full-size storage tanks in California. Seventeen tanks were originally made available but only 13 tanks containing distillate products were evaluated for the duration of the project. A pictorial description of these 13 tanks and some of the major parameters which are commonly associated with hydrocarbon losses from floating-roof tanks are illustrated in Figure I-1. Work was initiated in July 1976 and concluded in January 1977.

To determine hydrocarbon losses, ES followed a procedure in API Bulletin 2512 which related hydrocarbon loss to stock density change. The method relies on the fact that hydrocarbon compounds that evaporate most quickly from the tank will be light ends and the stock density will, therefore, increase as total volume decreases. Samples of the stock were collected at periodic intervals and density determinations were conducted in the laboratory. The flashing potential of the petroleum stocks used in this study was sufficiently large so as to overshadow all other possible errors associated with both field and laboratory procedures. Several modifications to the general API procedure had to be accomplished. Once the flashing problem was controlled, the investigation progressed smoothly.

Auxiliary tasks associated with this project included laboratory and pilot scale testing, surveys of seal technology, and review of the

DESCRIPTION OF 13 FLOATING ROOF TANKS USED IN THE STUDY (EXCLUDES UNION NO. 5 AND 3 CRUDE OIL TANKS)

LOCATION	
LOS ANGELES	X X X X X X X X X
SAN FRANCISCO	X X X X

HYDROCARBON LOSSES (lb/day)	
0 TO 25	XXX
25 TO 50	XXXXXX
50 TO 100	X
100 TO 200	XX
200 TO 300	X

STOCK TYPE	
GASOLINE	XXXXXXXXXX
JP4	X
REFORMATE	X
NAPHTHA	X

TANK DIAMETER (ft)	
40 TO 59	X
60 TO 79	XX
80 TO 99	XXX
100 TO 119	XXX
120 TO 139	XXX
140 TO 159	X

REID VAPOR PRESSURE	
4	X
5	X
6	X
7	
8	
9	XXXXXX
10	XX
11	X
12	X

TRUE VAPOR PRESSURE	
2	X
3	X
4	XX
5	XXXXXX
6	X
7	X

TANK TYPE	
RIVETED	XXXXXXX
WELDED	XXXXXX

SEAL TYPE	
SHOE	XXXXXXX
TUBE	XXXX
SHOE & TUBE	XX

NUMBER OF GAPS	
0	XXX
1 TO 9	X
10 TO 19	X
20 TO 29	XXXXX
30 TO 39	
40 TO 49	X
50 TO 59	
60 TO 69	
70 TO 79	XX

GAP AREA (ft^2)	
0	XXX
0 TO .9	XXXXX
1 TO 1.9	X
2 TO 2.9	
3 TO 3.9	X
4 TO 4.9	X
5 TO 5.9	
6 TO 6.9	X
7 TO 7.9	
8 TO 8.9	X

WIND SPEED (mph)	
4 TO 4.9	XXXXX
5 TO 5.9	XXXXX
6 TO 6.9	XXX

STOCK TEMP. (°F)	
50 TO 54	X
55 TO 59	XX
60 TO 64	XXXXX
65 TO 69	XXXXX

FIGURE I-1

API equation for estimating hydrocarbon losses.

Results of the field investigation showed that average hydrocarbon emissions from 13 static floating-roof tanks were about 50 percent of the quantity that would be estimated by use of API Bulletin 2517.

Several tank, roof and seal design parameters as well as several weather parameters were recorded during the study and statistical correlations were conducted to try to determine the significant variables which affected emission rates. Unfortunately, some variables such as stock temperature in the rim space, rim space surface area, tightness of the apron between the roof and shoe seals, etc., were not measured during this investigation. As might be expected, no correlations were particularly evident; further research will be required to clearly understand the mechanisms responsible for hydrocarbon losses.

Hydrocarbon emissions from 9 of the 13 tested tanks showed surprisingly similar emissions even though major differences were noted between Reid vapor pressure of the stocks, seal type, seal gaps, wind speed and other parameters. Seal gap size was found to be of no more importance than many other parameters. In one example, two very similar tanks containing the same type of product had the same emission rate, although one had twice the gap size.

Particular interest during this investigation was focussed on determining the best available seal technology. Two surveys were conducted. The first survey evaluated commercially available seals through individual companies. The second survey addressed seal gap size actually measured at different roof levels for some 200 tanks in Southern California.

Many seal designs were found to be commercially available but there were no emission test data available to demonstrate the cost effectiveness of the designs for reducing hydrocarbon emissions.

The tabulation of gap size data for 200 tanks showed that tube seals frequently have smaller gap spaces than primary shoe seals and that seal gap size could be reduced by use of secondary seals.

CHAPTER II

CONCLUSIONS

CHAPTER II

CONCLUSIONS

1. The basic API method of determining hydrocarbon losses from petroleum distillate products by measuring the stock density change (API-2512) was demonstrated to be a very reliable procedure. However, the instrumentation and methodology developed during the course of this investigation need to be incorporated into any re-write of the API procedure. The API procedure was found not satisfactory for measuring standing losses from crude oil storage tanks.

2. Measured hydrocarbon losses from 13 floating-roof storage tanks, all located in California and all containing petroleum distillates, were in general below the quantities estimated by the API-2517 equation. The emission loss of the 13 tanks over the duration of the test period averaged about one-half of the quantity estimated by API-2517. All measurement procedure decisions were decided on the conservatively high side.

3. Four floating-roof tanks with primary tube seals and zero or very small gap size showed the same order of magnitude for hydrocarbon losses as six tanks storing similar products with primary shoe seals having considerably more gap space. Two identical riveted tanks with the same type of primary shoe seals, the same stock, and located side-by-side in the same tank farm, had the same emission rate even though the total gap area on one tank was intentionally increased to more than double the gap area on the second tank. It would appear that some other parameters are over-riding the significance of gap size with respect to hydrocarbon losses.

4. A survey of a wide variety of seals on 200 tanks in Southern California showed that no seal design would eliminate all gaps on floating-roof tanks.

CHAPTER III

INTRODUCTION

CHAPTER III

INTRODUCTION

BACKGROUND

Hydrocarbon emissions from floating-roof tanks are currently estimated by use of an equation from an American Petroleum Institute (API) bulletin. The data base for this bulletin consisted of 60 tests conducted primarily between 1933 and 1942. Two tests were run on crude oil; 58 were run on gasoline. The loss measurement was determined in 57 of the tests by the change in vapor pressure. Three-fourths of the tests were run on riveted tanks and the largest tank tested was 145 feet in diameter.

Results of these studies were published in 1962 by the American Petroleum Institute in their API Bulletin 2517. The report included an equation for estimating hydrocarbon losses from floating-roof tanks. The U.S. Public Health Service (predecessor to EPA) has used the equation and published it in their emissions factor publication, AP-42. Air pollution control agencies at all levels of government have since used the equation to estimate hydrocarbon emissions from floating-roof petroleum storage tanks.

Use of the equation by the regulatory agencies has recently resulted in the conclusion that floating-roof tanks were responsible for a significant portion of the hydrocarbon emission inventories in many Air Quality Control Regions and that further control was required. Under the recent New Source Review rules, estimates of hydrocarbon emissions from proposed new tanks have caused construction of some of these tanks to be blocked.

The opinion has been voiced by some industry scientists that the API equation does not take into account improvements made in the basic design of floating-roof tanks and roof seals over the past several years and therefore actual emissions could be much less than estimated by the API equation. On the other hand, the opinion has been voiced by some regulatory officials that better control technology should be

applied to further reduce floating-roof tank hydrocarbon emissions regardless of their relative magnitude.

The Chicago Bridge and Iron Company (CBI), at its Plainfield, Illinois, research facility undertook a test program in April 1976 for the Standard Oil Company of Ohio (SOHIO) to examine the mechanisms of hydrocarbon emission losses from floating-roof tanks and to obtain an improved hydrocarbon emission loss calculation procedure. Using the equation in API Bulletin 2517, emission estimates of hydrocarbon losses from a typical floating-roof tank were many times higher than the CBI estimates.

Laboratory tests were conducted by staff of Chevron U.S.A. Incorporated to evaluate hydrocarbon losses from open top containers while varying the dead air space above the liquid hydrocarbons. Tentative conclusions were that very little hydrocarbon vapors were lost to the atmosphere when dead space above the liquid approached 30 inches as commonly found in floating-roof tank shoe seal designs.

The age of the emission test data originally developed by API and its questionable application to today's technology, the initial results of the CBI test program for SOHIO, and preliminary laboratory results by the staff of Chevron U.S.A. Incorporated, all suggested the urgent need for a re-evaluation of hydrocarbon losses from floating-roof tanks.

OBJECTIVE

The original objective of the testing program was three-fold:

(a) Determine hydrocarbon emissions from floating-roof tanks as a function of seal gap size, vapor pressure, wind velocity, and other important variables;

(b) Determine what constituted best available seal technology and the estimated hydrocarbon emissions from use of that technology; and,

(c) Compare hydrocarbon emissions from existing floating-roof tanks with hydrocarbon emissions estimated to result from use of best available seal technology.

SCOPE

The field portion of this project was limited to measuring hydrocarbon losses from 17 floating roof tanks located in Los Angeles and San Francisco. No fixed-roof tanks were included in the study. The project size and duration were limited by the availability of tanks. Most tanks were made available for testing in August 1976 and were returned to service in January 1977. During the testing period, a layer of hydrocarbon product was floated on water in most of the tanks and no product was added. The evaluation was therefore specific for estimating standing losses; working losses were not evaluated.

The evaluation of best available seal technology was based on two surveys. The first survey addressed the availability of commercial seals through individual companies, both manufacturers and users. The second survey addressed seal gap size actually measured for some 200 tanks in Southern California.

Laboratory experiments were conducted by ES to provide insight into important variables affecting hydrocarbon evaporation rates.

Pilot scale tests, performed by Chicago Bridge and Iron Company, were observed and data were evaluated for potential input to the relationships observed in the ES field tests. Pilot scale tests were conducted first for the Standard Oil Company of Ohio (SOHIO) and later for the Western Oil and Gas Association.

Of the 17 full-sized tanks made available for this field sampling project, three of the tanks contained crude oil; the remaining 14 tanks contained a distillate product ranging from naphtha to jet fuel (Table III-1). All tanks met the following conditions:

(a) Roof leg openings were sealed;

(b) Emergency roof drains were at least 90 percent covered;

(c) Slotted gauging devices were equipped with a floating-type plug;

(d) Roof guide openings were closed; and

(e) All tank gauging or sampling devices were covered, except at the time of sampling.

TABLE III-1

DESCRIPTION OF FLOATING ROOF TANKS USED FOR STUDY

Identification	Location	Size Ht x Dia(ft)	Construction	Color	Roof Type*	Seal Type	Year Installed Tank	Year Installed Seal	Stock
ARCO 134	Long Beach	41x152	Riveted	White	D.D.	Shoe	1949	1962	Gasoline
Exxon 1757	Benicia	48x67	Welded	Yellow	P.D.	Tube	1967	1967	Gasoline
Gulf 80005	S.F. Springs	41x117	Riveted	Light Green	P.D.	Shoe	1926	1968	Gasoline
Lion 428	Martinez	29x78	Riveted	Tan	P.D.	Shoe	1933	1955	JP-4
Mobil 400x20	Oakland	40x85	Welded	W/Br.	D.D.	Shoe	1957	1957	Gasoline
Shell 47	Wilmington	31x90	Riveted	White	P.D.	Shoe	1923	1964	Gasoline
Shell 48	Wilmington	32x90	Riveted	White	P.D.	Shoe	1923	1960	Gasoline
Standard 192	El Segundo	30x115	Riveted	Light Pink	P.D.	Shoe/Tube	1939	1951/1976	Gasoline
Standard 412	La Mirada	28x95	Riveted	Silver	P.D.	Shoe	1913	1927	Crude
Standard 497	La Mirada	30x90	Riveted	Silver	P.D.	Shoe	1922	1927	Crude
Standard 9464	El Segundo	39x100	Welded	Pink	P.D.	Tube	1949	1976	Reformate
Standard 2140	Richmond	30x115	Riveted	Silver	P.D.	Shoe	1912	1947	Crude
Texaco 80210	Long Beach	40x120	Welded	White	P.D.	Tube	1957	1976	Naphtha
Texaco 20010	Richmond	48x54	Welded	Silver	D.D.	Shoe	1953	1953	Gasoline
Union 5	Wilmington	34x90	Welded	Yellow	D.D.	Tube	1949	1975	Naphta
Union 330	Wilmington	42x120	Welded	Yellow	D.D.	Tube	1954	1973	Gasoline
Union 100514	Torrance	41x135	Riveted	White	P.D.	Shoe/Wiper	1926	1950/1954	Gasoline

* D.D. (Double Deck)
P.D. (Pontoon Deck)

METHODOLOGY

Samples of the tank contents were collected at about two-week intervals and stock depth and temperature were recorded. Sampling and temperature measurements were generally performed according to the methods described on pages 28 to 34 of API Bulletin 2512 (July 1957). Density of the collected samples was determined by use of a Mettler-Paar Digital Precision Density Meter, Model DMA-50. Hydrocarbon losses were then determined by using the change of density method set forth in API Bulletin 2512.

Types of hydrocarbons emitted were determined by gas chromatographic analyses on samples obtained with a bomb in the gap between the roof and wall.

REPORT ORGANIZATION

The two chapters preceding this Introduction include Summary and Conclusions of the study. The next four chapters describe field test results, correlation studies, calculation of hydrocarbon losses, and best available seal technology. Recommendations and references conclude the report. A separate report of Appendices contains all raw test data.

CHAPTER IV

STATIC STORAGE HYDROCARBON EMISSION MEASUREMENTS

CHAPTER IV

STATIC STORAGE HYDROCARBON EMISSION MEASUREMENTS

The basic requirement of this investigation was to determine the hydrocarbon evaporation loss rate for petroleum stocks during static storage in floating-roof tanks. While hydrocarbon vapors do escape from floating-roof tanks, the volume flow rate is too low to measure by any conventional means. The standard source testing method would be to measure volumetric flow rate and pollutant concentration and then calculate the pollutant mass flow rate; such procedures cannot be used for floating-roof tanks. Another measurement procedure would be to locate continuous hydrocarbon monitors downwind from the tank and rely on dispersion calculations to derive a source emission rate. Major potential errors associated with assigning dispersion coefficients would probably yield very unreliable estimates of the emission rate.

Since direct measurement of the loss rate was not possible, ES utilized an indirect measurement procedure published in an American Petroleum Institute Bulletin, Tentative Methods of Measuring Evaporation Loss from Petroleum Tanks and Transportation Equipment, API Bulletin 2512, July 1957, pages 28-34, and entitled "Tentative Method for Determining Evaporation Losses by Change in Stock Density." This method relies on the fact that hydrocarbon compounds that evaporate most quickly from the tank will be the "light ends" and, therefore, the stock density should increase after the "light ends" have evaporated. The vapors are usually comprised of hydrocarbon compounds that range from methane to hexane (C_1 - C_6), and petroleum stocks usually contain compounds that range from C_1 - C_{13}. For gasoline, the ratio of the vapor density (in liquid form) to that of the stock can be estimated by using the density of pentane (C_5) and octane (C_8), and is typically 0.85. Thus, evaporation results in less volume of stock in the tank but the volume that does remain has a higher density than it did initially. The measurement technique, then, is simply to determine by laboratory analyses the relationship between density change and the weight change of each petroleum stock under investigation. Once this relationship (a density-evaporation curve) is established, stock in the tanks can be sampled to determine initial and subsequent densities. Increases in stock density are then related to

the specific stock's density-evaporation curve to calculate the weight of stock loss.

API Bulletin 2512 also suggested a technique to shorten the weathering time required to see a significant change in stock density and to ensure that the desired accuracy could be achieved. The suggested technique was utilized for most tanks in this investigation. It involved floating a small layer (two to four feet) of stock on water. This resulted in decreasing the volume of the stock that could evaporate and increased the relative change in density over a short time period. Therefore, a shorter time span was required to measure a given change in stock density.

SAMPLE COLLECTION PROCEDURE

The twelve tanks located in Southern California were sampled on a nominal bi-weekly sampling schedule while the five tanks in Northern California were sampled once every four to five weeks. The field sampling began in late July 1976 and continued through late December 1976.

On each visit, several grab samples of the stock were collected by water displacement using a sample thief. The samples were obtained by submerging an 8-ounce narrow neck glass sample bottle filled with water to the desired position in the stock. The sample bottle was then inverted to allow the stock to displace the water. The sample bottle was then uprighted, withdrawn from the stock, capped immediately and stored on ice.

In the field sampling procedure, the most significant potential error was "flashing" of the lighter ends of the petroleum distillate from the sample bottle before density measurements could be completed. The average density of the stock had to be measured with an accuracy of 0.00003 g/ml in order to achieve the desired confidence in the loss calculations outlined in API-2512. The "flashing" potential of the petroleum stocks used in this study was sufficiently large so as to overshadow all other possible errors associated with both field and laboratory procedures. This potential dictated several procedural modifications as the study progressed. The initial field sampling procedure used 16-ounce wide-mouth bottles to obtain the grab samples. Aluminum foil was placed over the mouth of the jar prior to replacing the cap after the sample had been collected. The

samples were stored on ice and delivered to the laboratory and then transferred to other sample containers prior to density analysis. These procedures allowed an unacceptable amount of flashing and leakage. Subsequently, 8-ounce narrow-mouth bottles were used and samples were not transferred to other sample containers prior to the density determination.

As a quality control check, all samples were delivered to the laboratory with no indication of the specific floating-roof tank or sample port on the bottles. The only notation was a random identification number. Duplicate samples were given to the laboratory in random order. A field notebook was kept with specific instructions for analyses of each sample. A signed copy of the instructions was given to the laboratory with each set of samples. A sequential set numbering system was developed to ensure a cross check between the field notebook and sample bottle identification numbers.

LABORATORY PROCEDURE

The volatile nature of the petroleum stocks also required changes in the laboratory procedures. The API tentative method suggested that a Bingham pycnometer method (ASTM D-1217-54) be used to determine the density of each grab sample and that the density-evaporation curve be obtained by a bubbler apparatus that increased the rate of evaporation. Initial laboratory analyses showed that the density of water and pure hydrocarbon compounds could be measured to within the prescribed accuracies of 0.00002 g/ml reproducibility using the suggested Bingham pycnometer method. However, only 0.00050 g/ml reproducibility could be obtained for the petroleum stocks used in this study under the most stringently controlled experiments. Several modifications were made to the pycnometer including using 100 ml with a graduated neck rather than the 25 ml vessels. However, no satisfactory results were obtained. A possible explanation for the difficulties encountered may be that API-2512 attempted to apply a wider scope of the stock density change method than it was originally intended by the ASTM committee. Table IV-1 shows a quotation out of each document that describes the general scope of each method. The restriction of the method in ASTM D-1217-54 to "pure hydrocarbons or petroleum distillates boiling between 194 and

TABLE IV-1

TENTATIVE METHOD FOR DETERMINING EVAPORATION LOSSES BY CHANGE IN STOCK DENSITY

API BULLETIN 2512 - JULY 1957

PART II, SECTION D, p. 28

SCOPE

This method is designed to measure evaporation loss by the change in density of a stock during storage in any tank or vessel. Stock withdrawals can be tolerated during a test but any stock addition voids the test. The method is not suitable for pure compounds, very narrow-boiling fractions, or for liquids with a vapor pressure greater than 0.9 atmospheres at test conditions.

DENSITY AND SPECIFIC GRAVITY OF LIQUIDS BY BINGHAM PYCNOMETER

ASTM DESIGNATION: D 1217-54

SCOPE

1. (a) This method is intended for the measurement of the density of pure hydrocarbons or petroleum distillates boiling between 194 and 230°F (90 and 110C) that can be handled in a normal fashion as a liquid at the specified test temperatures of 68 and 77°F (20 and 25C). The method was developed especially for the reference fuels n-heptane and iso-octane and is designed to provide values having an accuracy of 0.00003 g per ml.

(b) The method provides a calculation procedure for conversion of density to specific gravity.

230° F that can be handled in a normal fashion as a liquid at the specified test temperatures," is not consistent with the particular petroleum stocks used in this study (mostly gasoline and crude oil). The example calculation and density evaporation curves presented in API-2512 imply that the method was successfully applied at one time. Therefore, rather than stating that the technique suggested in API-2512 is not correct, this experience may only indicate that the required skills could not be gained within a short time frame to adequately perform the tests. Whatever the final resolution may be, the application of ASTM D-1217-54 to gasoline and crude oil should be carefully evaluated before being used in any other investigation requiring stringent accuracy.

Other methods of determining density of gasoline and similar stocks to the desired accuracy were subsequently investigated. The Mettler-Paar Digital Precision Density Meter, DMA-50, was selected as being the most advantageous method for determining the petroleum stock density to the desired accuracy. The measuring principal of the DMA-50 depends upon the variation of the natural frequency of a tubular oscillator filled with the petroleum stock. The DMA-50 is calibrated by determining the frequency of oscillation for air and bi-distilled water at a known temperature. The known densities of air and water at the test temperature are then used to determine the calibration constant for the tubular oscillator. It is essential to know the temperature at which the density measurements are obtained to within $\pm 0.01°$ C if fifth place densities are to be determined. With the DMA-50 the reproducibility has been within ± 0.00002 g/ml for all petroleum stocks in this study except crude oil. The three floating-roof tanks that contained crude oil (Standard 412, 497, and 2140) were dropped from the study since even the modified methodology could not obtain better than ± 0.00100 g/ml reproducibility. Field sampling problems also existed with the crude oil tanks.

In the laboratory the sample bottle is retrieved from cold storage, the cap is removed and replaced immediately by a cap with a small hole. The DMA-50 teflon sample inlet tube is immediately placed through the hole mid-way into the sample bottle. Approximately 10 ml of sample is withdrawn and passed directly through the tubular oscillator. The oscillator requires only 0.7 ml of sample, therefore, the 10 ml sample

ensures that a "mid-stream" aliquot is obtained. The frequency period is determined and another sample aliquot is withdrawn as a check. If more than a ±0.00002 frequency difference is observed, another aliquot is measured.

With diligent attention given to sample collection, handling, storage, instrument calibration, and temperature control, it was observed that the DMA-50 would accurately repeat the density measurements to within ±0.00002 g/ml. Pure hydrocarbon compounds (hexane and benzene) were used to check the accuracy of the DMA-50 when using air and water as the calibration mediums. The densities of the pure compounds were determined using the Bingham pycnometer method for five replicate samples. The DMA-50 consistently gave density measurements to within ±0.00002 g/ml of the densities obtained using the 100 ml Bingham pycnometer.

The original API method of determining the stock density by using a pycnometer requires that the stock be transferred from the sample bottle to the pycnometer with a long needle syringe. Using the DMA-50 to determine the density, where liquid is syphoned directly from the sample bottle into the tubular oscillator, reduced the possible errors significantly. Simple experiments with the DMA-50 indicated that some gasolines could not be transferred from the sample bottle to the pycnometer even at temperatures as low as 40° F without increasing the density by 0.00100 g/ml or more.

The methodology suggested in API-2512 to determine the density-evaporation curve involved using a bubbler apparatus to determine the change in weight associated with a specific change in density. The petroleum stocks used in this study were sufficiently volatile to allow the density evaporation curves to be determined by just allowing the sample bottle cap to remain off for selected periods of time. After each time interval, the weight change and density were recorded. The density evaporation procedure is a delicate test in that small percentage weight changes must be determined with an analytical balance. Figure IV-1 shows a density evaporation curve for ARCO 134. Four of the twelve spatially distributed samples were used to determine the density evaporation curve. The initial densities of the samples were not the same

EXAMPLE DENSITY - EVAPORATION CURVE
ARCO #134 - SEPTEMBER 8, 1976

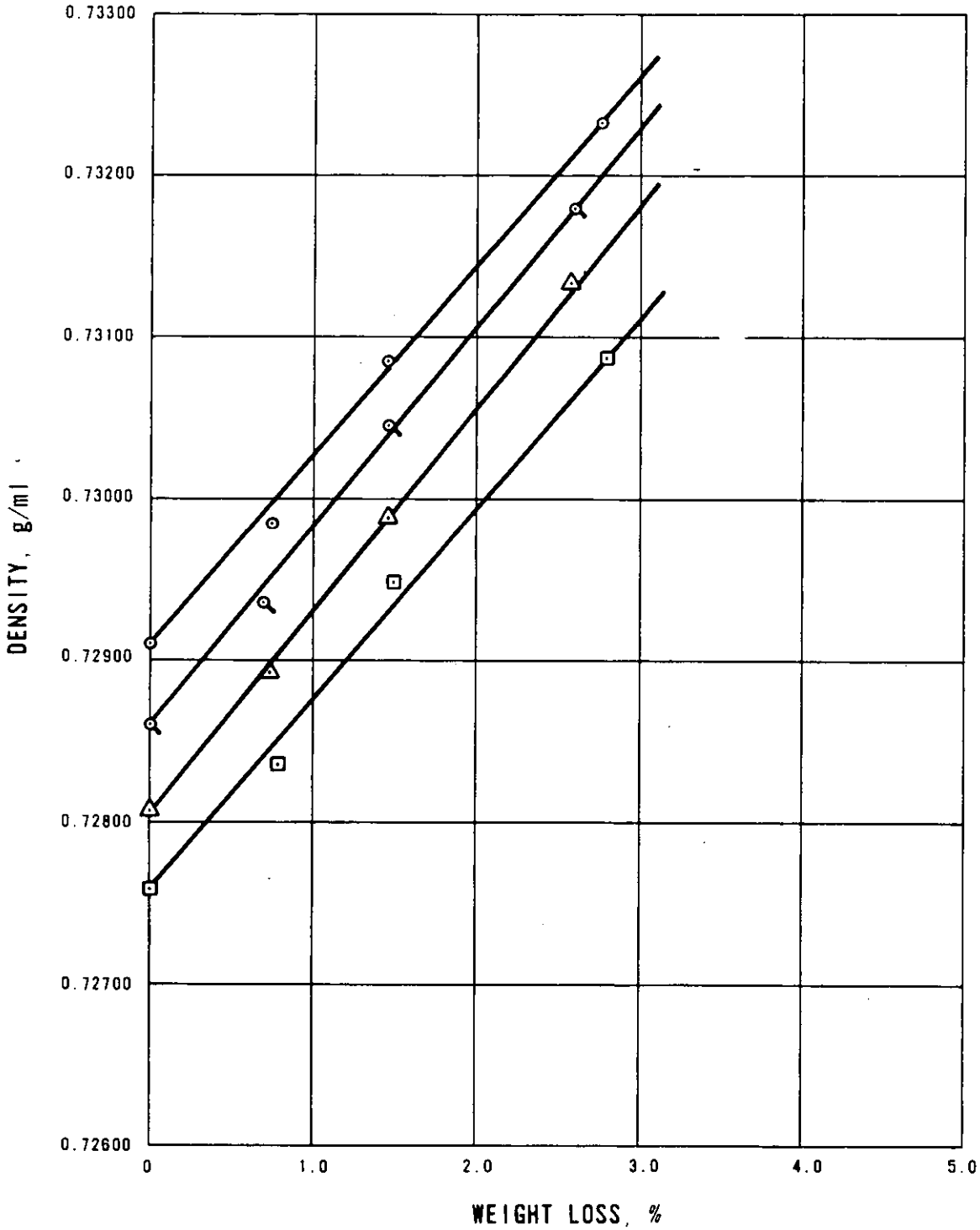

because each had lost a different amount of hydrocarbon vapor following the removal of approximately 10 ml of stock for analysis with the density meter. Even when the initial densities were significantly different, no large change in the slope was observed. This indicated that the density change increases directly with increasing weight loss, at least in the first three percent of the observed weight loss. A least squares technique was used to determine the slope of the density evaporation curves. The specific slope for each stock was then used to determine the weight loss associated with the observed density change over the "weathering" time span. The appendices list all laboratory results used to develop each density evaporation curve.

Variations in stock density obtained from various grab samples were considered to result from "flashing" of light ends rather than from random analysis error. Since flashing would result in higher density values, the major random error in each sample series should be to make certain density values higher than the actual density. To offset this possible random error, the three lowest density measurements obtained from the twelve spatial samples were always used as the best estimate of the average stock density. The average density determined by using the minimum three densities usually differed from the average of the twelve samples by only 0.00001 or 0.00002 g/ml.

EVALUATION OF POTENTIAL STRATIFICATION IN THE TANKS

Several samples were collected to determine if there were any horizontal or vertical stratification in the tanks which would significantly affect the desired accuracy of the average stock density. Whenever possible, twelve sampling ports were selected for each floating-roof tank so that each sample represents approximately the same volume of stock. These ports were usually leg support sleeves that extended from one to two feet into the stock. At least one sample was obtained at mid-depth of the petroleum stock from each port. Duplicate samples were often taken from each port to test repeatability of the sampling method. Since initial tests showed no measurable horizontal stratification, twelve mid-point grab samples were obtained on all tanks throughout the study period. Vertical grab samples were obtained for each tank at least once during the study. These samples were usually taken out of the normal sampling ports rather than the leg support sleeves. The leg support sleeves are narrower and extend further into the stock than the sampling port sleeves and are therefore more likely to contain a stagnant liquid. Results showed that for an individual tank, vertical stratification, if it does occur, is well below the precision of the density measurements and should not affect the determination of the average density in the tank. As an example, Figures IV-2 and IV-3 present data collected for Union 100514 and Texaco 80210 on September 17, 1976. No horizontal or vertical stratification can be seen that would be larger than the errors due to sampling and analysis.

It should be recognized that the sampling ports were generally distributed in the tank with few locations being nearer than three feet to the tank wall. One can hypothesize that if stratification did occur it would be more pronounced near the liquid and air interface along the tank wall. However, the objectives of this project were limited to measuring the average stock density initially and at the end of the "weathering" period. Any stratification that may occur near the rim space may affect hydrocarbon emissions but it would not significantly

SUMMARY OF TANK TEST

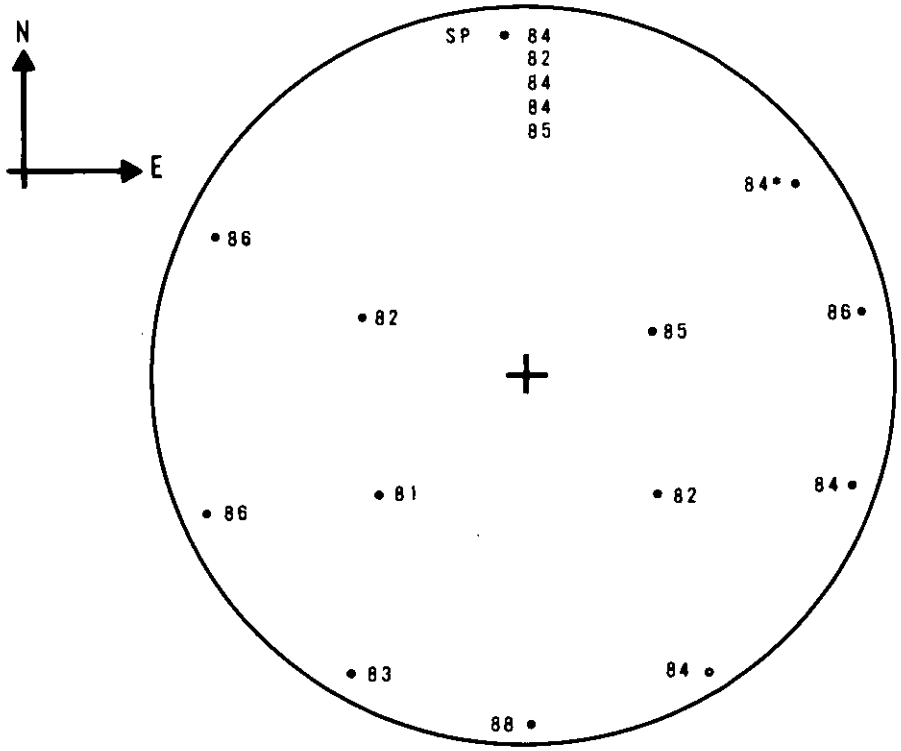

PLANT UNION
TANK NO. 100514
DATE SEPT. 17, 1976
STOCK DEPTH 74.5"
DIA. OF TANK 137'

*ALL NUMBERS INDICATE THE LAST TWO DIGITS OF THE 5th PLACE DENSITY AS .737__ g.ml.

DENSITY MEASUREMENTS

NO. OF SAMPLES 17
DEPTH 3'
MAXIMUM *.73788
MEAN .73784
MINIMUM .73781
STD. DEVIATION .00002
AVERAGE OF MINIMUM THREE .73782

SPECIAL DENSITY MEASUREMENTS

LOCATION	DEPTH	DENSITY
SP	1'	.73784
SP	3'	.73782
SP	5'	.73784
SP	3'	.73784
SP	3'	.73785

STOCK TEMPERATURE (°F)

NO. OF PORTS 13
MAXIMUM SURFACE 89.9
MINIMUM SURFACE 71.5
MAXIMUM MID 68.5
MINIMUM MID 68.1

*MAXIMUM MID-DEPTH DENSITY.

SUMMARY OF TANK TEST

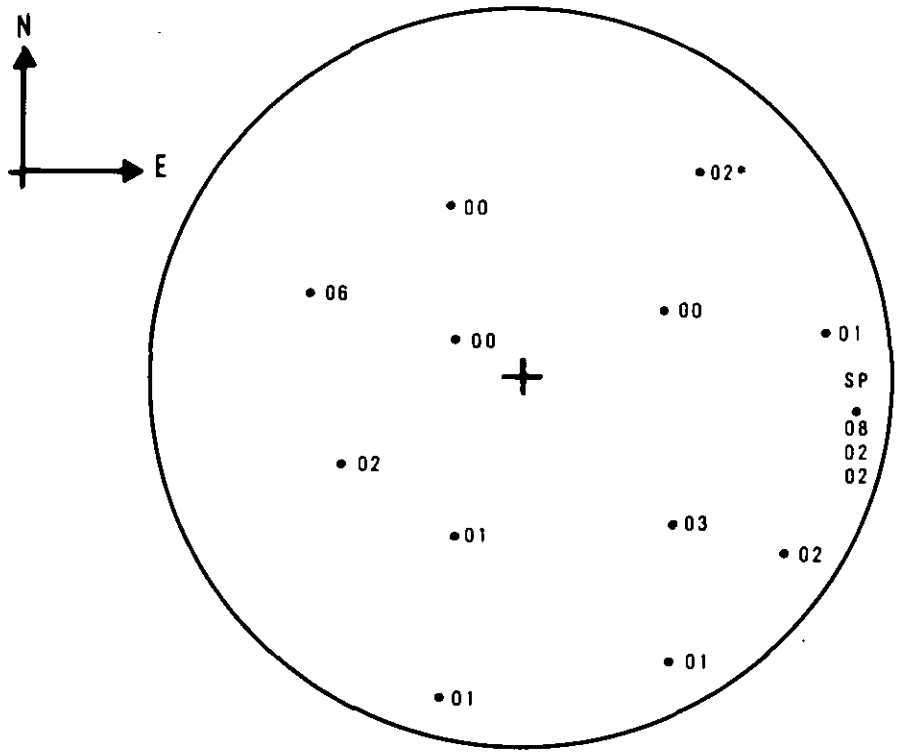

PLANT TEXACO
TANK NO. 80210
DATE SEPT. 17, 1976
STOCK DEPTH 45.1"
DIA. OF TANK 120'

*ALL NUMBERS INDICATE THE LAST TWO DIGITS OF THE 5th PLACE DENSITY AS .656__ g/ml.

DENSITY MEASUREMENTS

NO. OF SAMPLES 15
DEPTH 1.5'
MAXIMUM *.65606
MEAN .65602
MINIMUM .65600
STD. DEVIATION .00002
AVERAGE OF MINIMUM THREE .65600

SPECIAL DENSITY MEASUREMENTS

LOCATION	DEPTH	DENSITY
SP	7"	.65608
SP	22"	.65602
SP	37"	.65602

STOCK TEMPERATURE (°F)

NO. OF PORTS 13
MAXIMUM SURFACE 74.1
MINIMUM SURFACE 73.0
MAXIMUM MID 70.0
MINIMUM MID 70.0

*MAXIMUM MID-DEPTH DENSITY.

influence the average density as determined from the twelve spatially distributed samples. Table IV-2 lists several examples of the stratification tests which indicate the typical range noticed during the field testing. Because of the initial problems encountered in sample collection, handling and laboratory analyses, certain portions of the data are much more reliable than others. There are two dates when significant changes in procedures were incorporated which improved the reliability of the data tremendously. On August 20, 1976, all sample transfers were ceased and starting on September 17, 1976, small-mouth sample bottles were used for all sample collection except for the crude oil stock. The use of the small-mouth bottles significantly reduced the variability between densities measured throughout the tank. Table IV-3 lists some representative comparisons between data derived from samples taken at the same depth from the same sampling port. The densities determined using the wide-mouth bottles were always significantly higher than the densities obtained using small-mouth bottles, which indicated that more light ends evaporated with the use of wide-mouth bottles. For this reason, no density data collected prior to September 17, 1976 were used to estimate the absolute change in average stock density during the study period.

TABLE IV-2

EXAMPLE DEPTH STRATIFICATION RESULTS

Tank	Date	Spatial Variation (10^{-5} g/ml)	Depth Variation Surface Minus Bottom (10^{-5} g/ml)
Union 100514	9/17/76	5	0
Texaco 80210	9/17/76	6	+6
Exxon 1757	9/24/76	14	+8
Gulf 80005	10/28/76	11	+14
ARCO 134	10/28/76	4	+8
Union 100514	11/11/76	20	+1
Union 330	12/03/76	3	+1

TABLE IV-3

A COMPARISON OF DENSITY MEASUREMENTS
WIDE MOUTH BOTTLES VERSUS
SMALL MOUTH BOTTLES*

Tank	Date	Density (g/ml) Wide	Density (g/ml) Small	Maximum Δρ (g/ml)
Shell 47	10/13/76	0.73917	0.73887	.00031
		0.73911	0.73886	
		0.73907		
Standard 9464	10/12/76	0.77721	0.77693	.00041
		0.77701	0.77684	
		0.77693	0.77680	
Standard 192	10/12/76	0.69304	0.69273	.00031
		0.69287		
		0.69281		
Union 5	12/14/76	0.73865	0.73857	.00008
		0.73865	0.73858	

*All samples for each tank were collected from one particular sampling port.

EFFECTS OF WATER, TEMPERATURE AND FLASHING TIME

Simple laboratory experiments were conducted to evaluate the influence of certain variables on the density measurements. The use of water in the tanks was questioned as to the possible change it would have on the density measurements. Water was purposely left in a few sample bottles taken from a tank. The samples were shaken to ensure more contact of the water and gasoline. The density of each was determined after being stored for at least three days. No noticeable variation in the density was observed between those samples containing water and those not containing water. Temperature of the stock has been raised as a possible reason for density variation due to air dissolving into the stock. The density of hexane was determined at room temperature, then the hexane was heated to 90° F and the density was the same as at room temperature. The sample hexane was then cooled from 90° F to 40° F and let stand for three hours. No measurable change in density was observed. During field sampling, approximately 15 seconds lapse from the time a sample bottle is withdrawn from the stock to the time the cap is placed on the bottle. Questions were raised as to the amount of flashing that could occur during the time period. Gasoline was placed in a sample bottle at room temperature. The cap was removed and the density was determined. The cap was left off for 15 seconds and no change in density was noticed. The cap was then left off for 30 seconds and again no change in density was noticed. It was concluded that the flashing that occurs during the time it takes to place the cap on the sample bottle does not effect the density within the accuracy range of the density meter.

EXCLUSION OF CERTAIN TANKS

Three crude oil tanks (Standard 412, 497, and 2140) are shown in Tables IV-12, 13, and 14 but are not considered further in this study since very unreliable results were obtained. Inconsistent results for the crude oil may have been caused by handling problems in the laboratory procedure or by the fact that a residue was formed in each tank between the oil and water interface. Moreover, as stock temperature decreased during the study, the crude oil became very viscous, and stratification may have occurred. Analyses of the hydrocarbon losses from these tanks showed mostly methane and ethane so their importance may be less significant from an air pollution point of view than the gasoline storage tanks.

Union 5 (Table IV-18) is also not described further since a large random variation of stock density was noticed from one sampling port to another. Density data from Union 5 were inconsistent and collected samples did not adequately represent the stock since the leg support sleeves reached nearly to the gasoline and water interface.

DENSITY MEASUREMENTS

The actual field note sheets and laboratory analysis sheets are listed in the appendices of Volume 2. Tables IV-4 through IV-20 (Field Measurement Summary), at the end of this Chapter, summarize the pertinent data for each floating-roof tank. The densities listed in the Field Measurement Summary sheets are for those samples taken horizontally throughout the tank at mid-depth of the stock. The column labeled "MIN. 3 AVERAGE" represents the best estimate of the true average stock density.

Figures IV-4 through IV-7 are graphical representations of the density change during the "weathering" period. The scatter about a smooth curve or straight line that could be drawn between the data points in Figures IV-4 through IV-7 tends to be a measure of the day-to-day sampling and analysis error rather than a rapid change in density. A close examination for the densities measured for the week ending October 29, 1976 shows that the measured densities of six stocks decreased. These tanks were: ARCO 134, Gulf 80005, Shell 47 and Shell 48, and Standard 192 and Standard 9464. A decrease in stock density is

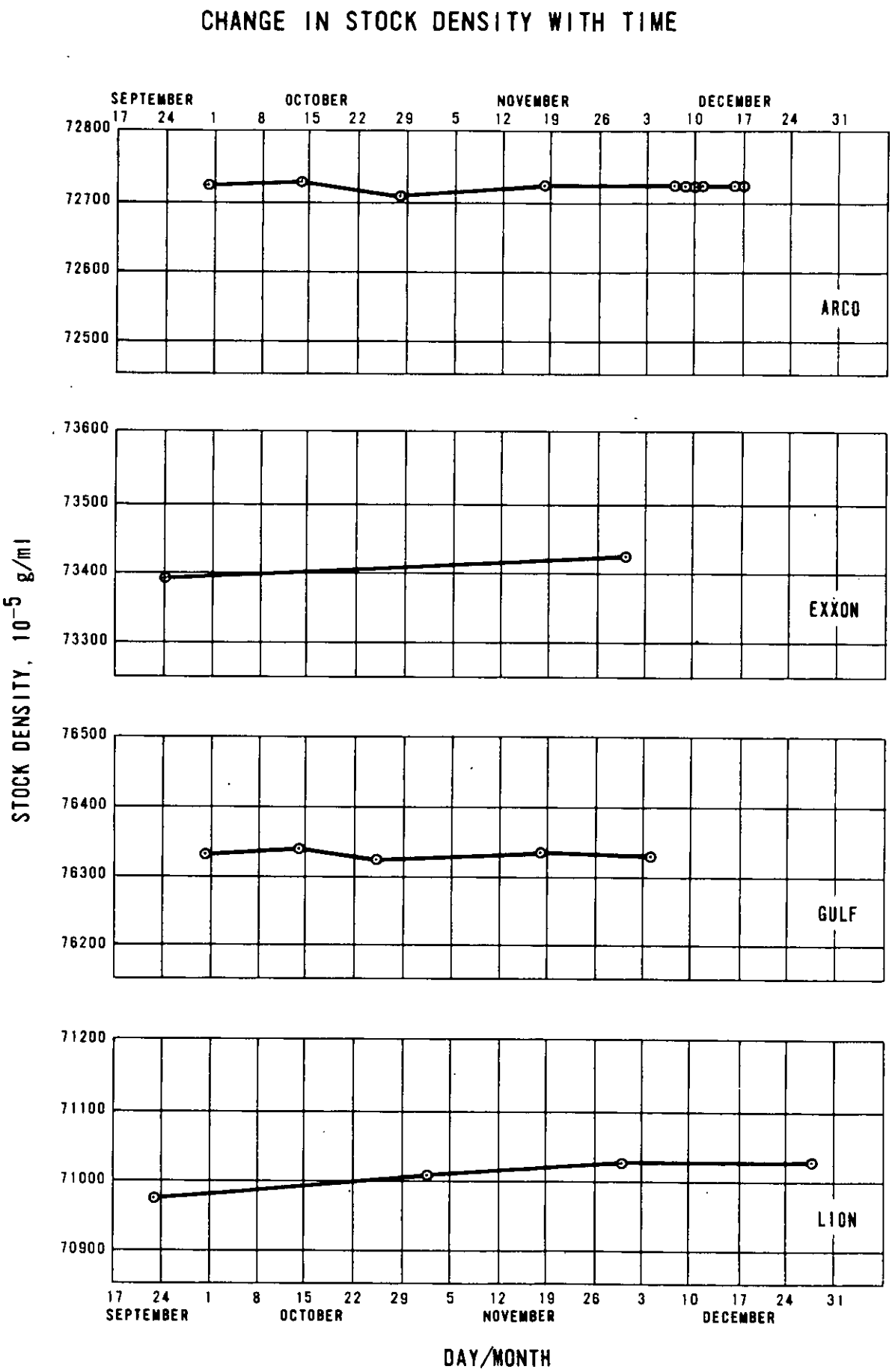
CHANGE IN STOCK DENSITY WITH TIME
SEPTEMBER
OCTOBER
NOVEMBER
DECEMBER
17 24 1 8 15 22 29 5 12 19 26 3 10 17 24 31
72800
72700
72600
72500
ARCO
73600
73500
73400
73300
EXXON
76500
76400
76300
76200
GULF
71200
71100
71000
70900
LION
STOCK DENSITY, 10^{-5} g/ml
17 24 1 8 15 22 29 5 12 19 26 3 10 17 24 31
SEPTEMBER
OCTOBER
NOVEMBER
DECEMBER
DAY/MONTH

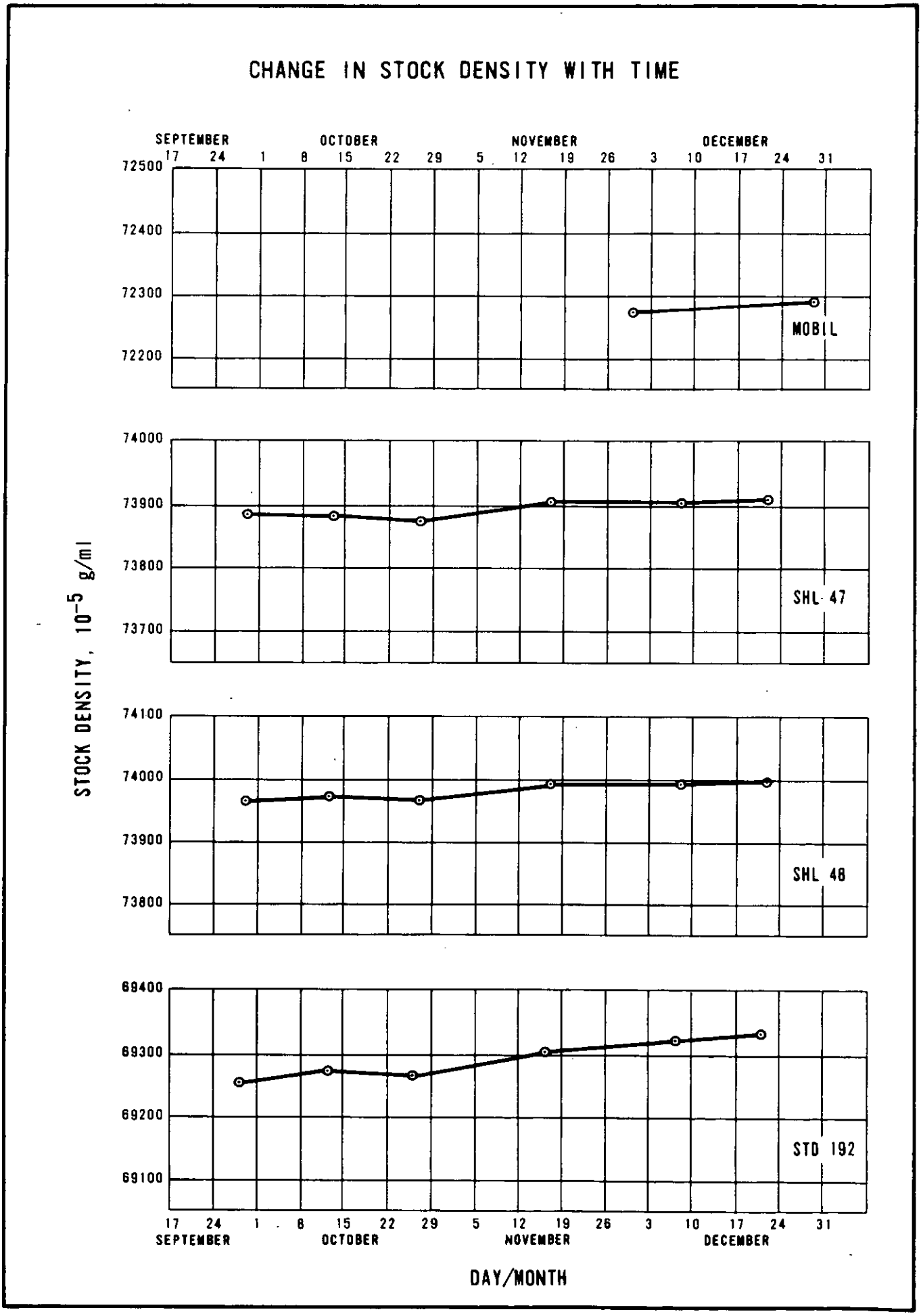
CHANGE IN STOCK DENSITY WITH TIME
SEPTEMBER
OCTOBER
NOVEMBER
DECEMBER
17 24 1 8 15 22 29 5 12 19 26 3 10 17 24 31
72500
72400
72300
72200
MOBIL
74000
73900
73800
73700
SHL 47
74100
74000
73900
73800
SHL 48
69400
69300
69200
69100
STD 192
STOCK DENSITY, 10^{-5} g/ml
DAY/MONTH

CHANGE IN STOCK DENSITY WITH TIME

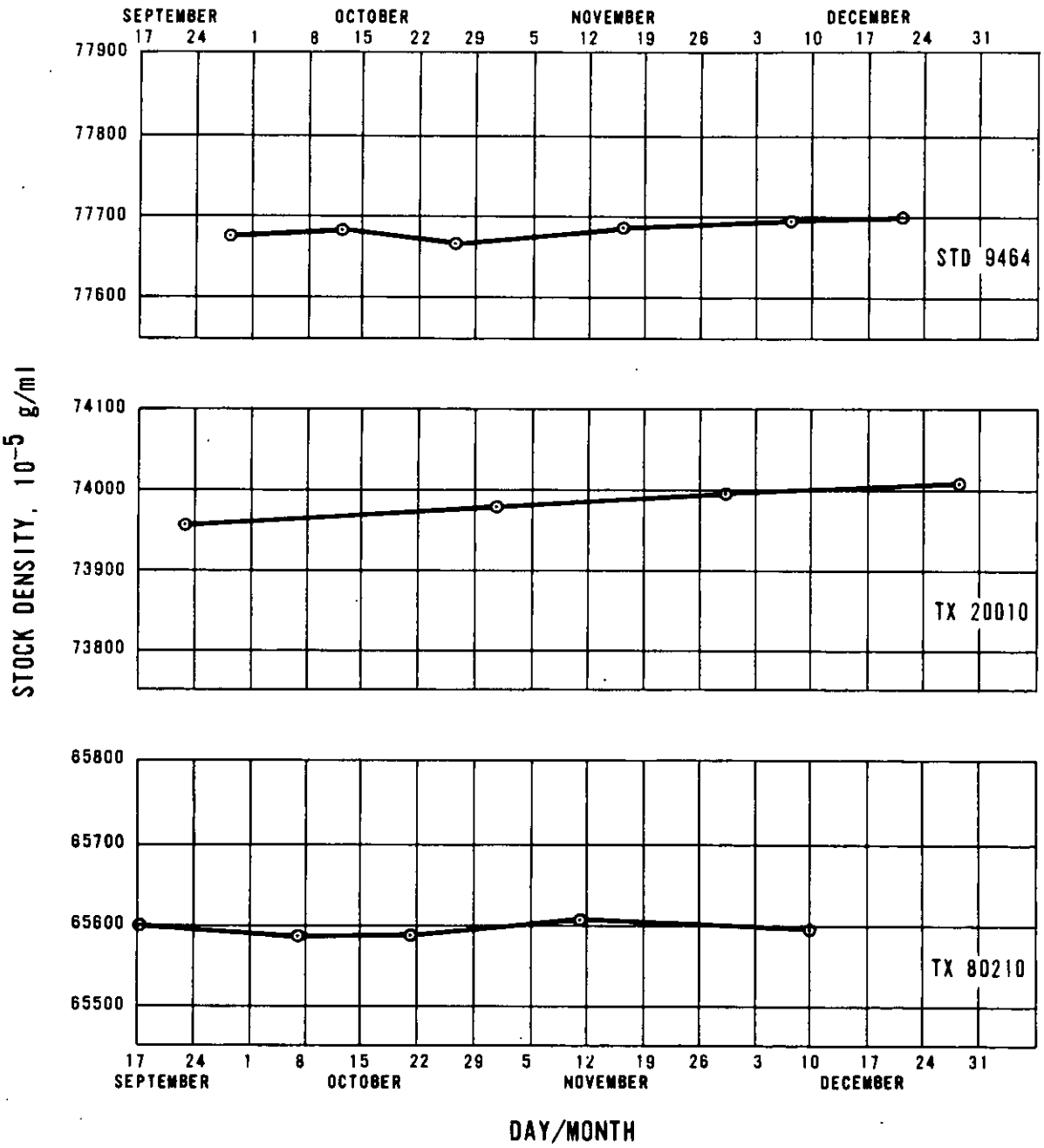

CHANGE IN STOCK DENSITY WITH TIME

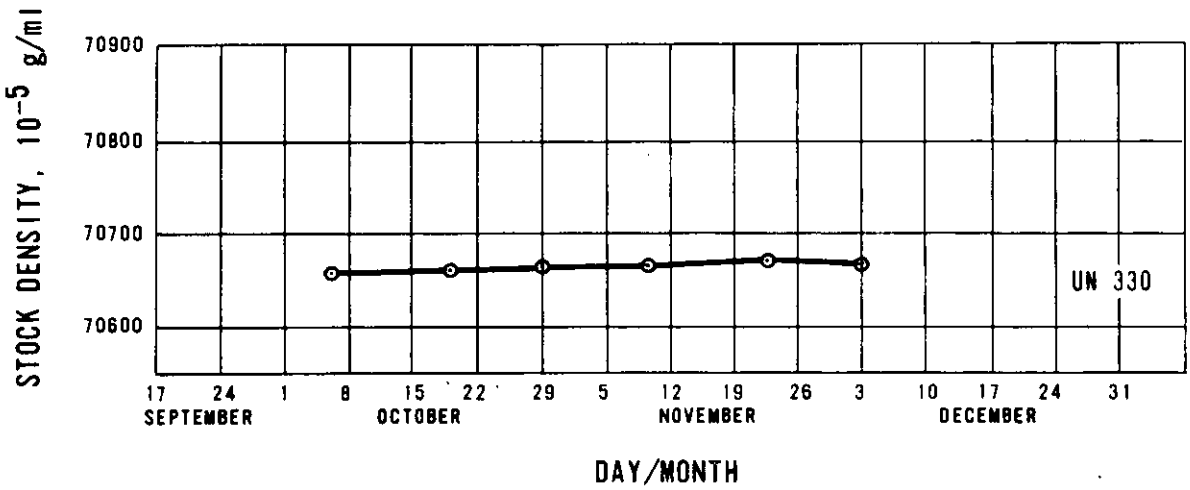

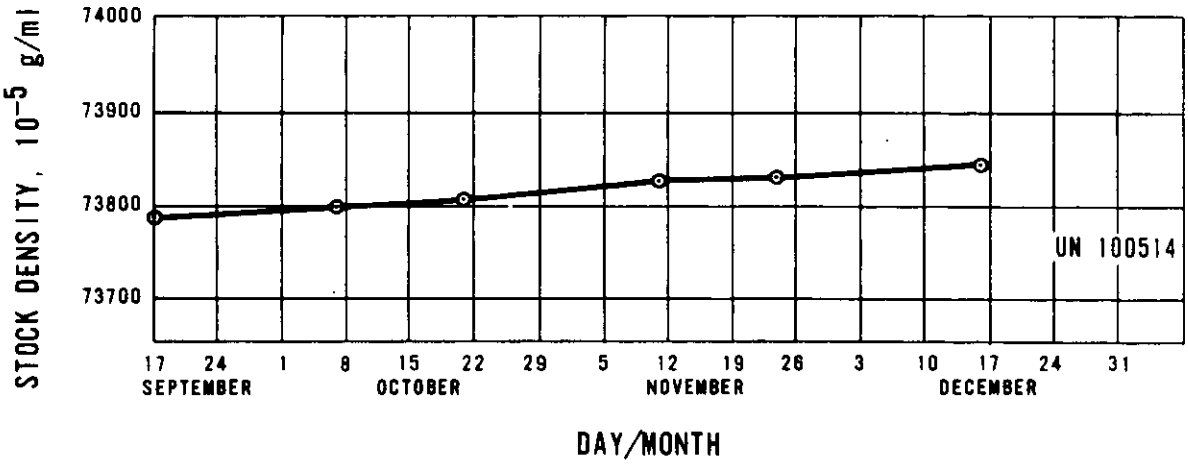

contrary to the fact that as evaporation occurs, the density increases. Subsequent data points for each of the six tanks suggest that the above mentioned densities were erroneous. The six tanks were sampled, two tanks each day, on October 26, 27, and 28. Laboratory analyses were performed on October 28 or November 1. No other tanks were sampled between October 26 and 28 nor were any other samples analyzed in the laboratory on October 28 or November 1. As previously discussed, all expected errors result in measured densities which are higher than the true densities. Therefore, the six data points mentioned above should be treated as suspect.

The emission rate estimate is based upon the density-evaporation curve and the change in density over the weathering period. The change in density was estimated using linear regression and an examination of the beginning and end point densities. In some cases, a choice would have to be made between the two techniques. In each of those cases, the higher of the two density changes was used to estimate the emission rate. The intent was to estimate the upper limit emission rate rather than a lower one. Table IV-21 lists the number of days estimated change in density, slope of the density evaporation curve, and estimated emissions for each of the thirteen tanks.

TABLE IV-4

FIELD MEASUREMENT SUMMARY

PLANT ARCO TANK FARM

TANK NO. 134

TANK DIAMETER (FT.) 153'

TYPE OF TANK RIVETED

TYPE OF ROOF DOUBLE DECK

NO. OF GAPS 30 AREA (FT.^{2}) 4.535

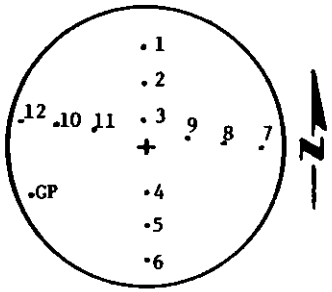

SKETCH OF SAMPLING PORTS

SEAL TYPE SHOE - SINGLE SEAL

DEPTH OF STOCK (IN.) 92.0

VOLUME OF STOCK (BBLS) 23,900

HEIGHT OF ROOF (FT.) 7.67'

COLOR OF ROOF WHITE (PEELING)

HEIGHT OF TANK (FT.) 41'

COLOR OF TANK WHITE (PEELING - RUST SPOTS

TYPE OF STOCK GASOLINE

1% Δ WT. = 120×10^{-5} (g/ml)Δp

DATE SAMPLED	RVP @100° F (psi)	ASTM 5% DISTL. (°C)	DENSITIES (g/ml)					NUMBER OF SAMPLES	STOCK TEMPERATURE (°F)					DEPTH OF STOCK (IN.)
									SURFACE		MIDDLE		AVG.	
			MINIMUM	AVERAGE	MAXIMUM	STANDARD DEV.	MIN. 3 AVERAGE		MAX.	MIN.	MAX.	MIN.		
8-18-76	8.5	47	.72759	.72885	.73555	.00226	.72761	12	81.5	78.1	78.2	78.0	78.1	92.0"
9-8-76	7.5	58	.72707	.72714	.72723	.00005	.72708	12	90.0	84.1	76.9	76.1	76.7	92.1"
9-30-76	8.6	46	.72716	.72730	.72817	.00028	.72718	12	74.9	71.4	71.4	71.2	71.2	--
10-14-76	8.6	44	.72723	.72726	.72728		.72724	12	77.5	72	72.1	72	72.1	92.5
10-28-76	8.7		.72706*	.72708*	.72710*		.72707*	18	77.1	67.1	67.8	67.5	67.6	92.0"
11-18-76			.72721	.72726	.72729		.72722	18	71.2	64.2	64.5	64.3	64.4	91.94
12-7-76			.72724	.72730	.72741		.72725	12	68.6	62.0	58.9	58.6	58.7	92.63
12-8-76			.72727	.72729	.72730		.72727	11	--	--	--	--	--	92.63
12-9-76			.72725	.72733	.72778		.72725	12	--	--	--	--	--	92.38
12-10-76			.72723	.72726	.72731		.72724	12	--		--	--	--	92.5
12-14-76			.72725	.72727	.72728		.72725	13	70.0	60.3	56.7	56.6	56.7	92.25
12-16-76			.72723	.72725	.72727		.72723	12	67.9	62.2	57.0	56.8	57.0	92.5

REMARKS *SUSPECT DATA

TABLE IV-5

FIELD MEASUREMENT SUMMARY

PLANT EXXON

TANK NO. 1757

TANK DIAMETER (FT.) 67'

TYPE OF TANK WELDED

TYPE OF ROOF PONTOON

NO. OF GAPS 0 AREA (FT.^{2}) 0

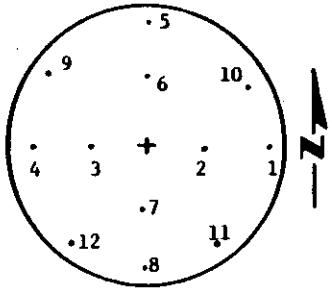

SKETCH OF SAMPLING PORTS

SEAL TYPE TUBE

DEPTH OF STOCK (IN.) 52.1

VOLUME OF STOCK (BBLS) 3,850

HEIGHT OF ROOF (FT.) 25

COLOR OF ROOF YELLOW

HEIGHT OF TANK (FT.) 48'

COLOR OF TANK YELLOW

TYPE OF STOCK UNLEADED GASOLINE

1% Δ WT. = 190×10^{-5} (g/ml)$\Delta\rho$

DATE SAMPLED	RVP @100° F (psi)	ASTM 5% DISTL. (°C)	DENSITIES (g/ml)					NUMBER OF SAMPLES	STOCK TEMPERATURE (°F)					DEPTH OF STOCK (IN.)
									SURFACE		MIDDLE		AVG.	
			MINIMUM	AVERAGE	MAXIMUM	STANDARD DEV.	MIN. 3 AVERAGE		MAX.	MIN.	MAX.	MIN.		
9-24-76	9.2	41	.73393	.73397	.73407	.00005	.73393	12	64.2	62.5	64.9	64.2	64.6	52.1
11-30-76	--	--	.73426	.73428	.73433		.73427	14	54.9	52.9	53.3	53.1	53.2	52.3

REMARKS

ENGINEERING-SCIENCE ES

TABLE IV-6

FIELD MEASUREMENT SUMMARY

PLANT GULF

TANK NO. 80005

TANK DIAMETER (FT.) 117.2'

TYPE OF TANK RIVETED

TYPE OF ROOF PONTOON DECK

NO. OF GAPS 23 AREA (FT.^{2}) 0.579

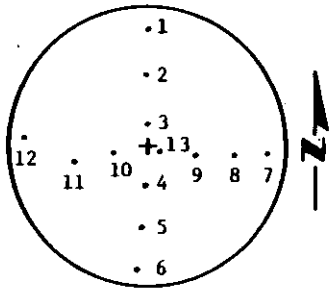

SKETCH OF SAMPLING PORTS

SEAL TYPE SHOE

DEPTH OF STOCK (IN.) 46.63 (10/28/76)

VOLUME OF STOCK (BBLS) 7,650

HEIGHT OF ROOF (FT.) 12

COLOR OF ROOF WHITE

HEIGHT OF TANK (FT.) 41'

COLOR OF TANK LIGHT GREEN

TYPE OF STOCK MOTOR GASOLINE

1% Δ WT. = 132×10^{-5} (g/ml)$\Delta\rho$

DATE SAMPLED	RVP @100° F (psi)	ASTM 5% DISTL. (°C)	DENSITIES (g/ml)					NUMBER OF SAMPLES	STOCK TEMPERATURE (°F)					DEPTH OF STOCK (IN.)
									SURFACE		MIDDLE		AVG.	
			MINIMUM	AVERAGE	MAXIMUM	STANDARD DEV.	MIN. 3 AVERAGE		MAX.	MIN.	MAX.	MIN.		
7-27-76	--	--	--	--	--	--	--	--	--	--	81.0	77.0	79.0	47.1
8-3-76	3.6	58	.76629	.76980	.77775	.00401	.76641	12	--	--	82.5	70.3	75.4	47.1
9-8-76	5.0	63	.76392	.76400	.76410	.00005	.76392	12	95.1	73.9	73.0	71.9	72.1	47.1
9-30-76	5.5	56	.76330	.76338	.76340	.00003	.76334	12	72.0	69.8	69.8	69.8	69.8	47.1
10-14-76	4.6	48	.76340	.76341	.76344		.76340	12	69.1	68.8	69.5	69.2	69.4	46.66
10-28-76	5.3	55	.76320*	.76322*	.76331*		.76321*	20	64.9	64.1	65.2	64.7	65.1	46.63
11-18-76	--	--	.76334	.76336	.76336		.76334	12	71.2	64.2	64.5	64.3	64.4	46.63
12-4-76	--	--	.76328	.76332	.76350		.76329	12	57.9	56.7	56.9	56.8	56.9	46.63

REMARKS *SUSPECT DATA

ENGINEERING-SCIENCE ES

TABLE IV-7

FIELD MEASUREMENT SUMMARY

PLANT LION

TANK NO. 428

TANK DIAMETER (FT.) 78

TYPE OF TANK RIVETED

TYPE OF ROOF PONTOON

NO. OF GAPS 72 AREA (FT.^{2}) 8.59

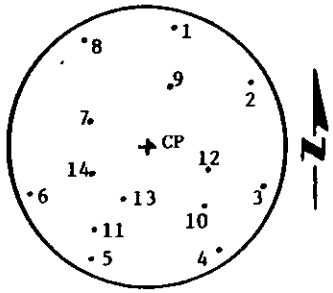

SKETCH OF SAMPLING PORTS

SEAL TYPE SHOE

DEPTH OF STOCK (IN.) 100.75

VOLUME OF STOCK (BBLS) 7,400

HEIGHT OF ROOF (FT.) 15.13

COLOR OF ROOF BLACK

HEIGHT OF TANK (FT.) 29

COLOR OF TANK TAN

TYPE OF STOCK J.P. 4

1% Δ WT. = 82×10^{-5} (g/ml)$\Delta\rho$

DATE SAMPLED	RVP @100° F (psi)	ASTM 5% DISTL. (°C)	DENSITIES (g/ml)					NUMBER OF SAMPLES	STOCK TEMPERATURE (°F)					DEPTH OF STOCK (IN.)
									SURFACE		MIDDLE		AVG.	
			MINIMUM	AVERAGE	MAXIMUM	STANDARD DEV.	MIN. 3 AVERAGE		MAX.	MIN.	MAX.	MIN.		
8-30-76	5.6	52	.70971	.70980	.70989	.00006	.70974	13	>122	90.0	74.5	74.5	74.5	101.0
9-23-76	6.1	50	.70981	.70983	.70985		.70982	9	101.0	81.0	70.2	70.0	70.1	100.75
11-2-76	6.0	57	.71008	.71010	.71011		.71009	12	72.0	62.2	62.1	61.9	62.0	100.75
11-30-76	--	--	.71023	.71025	.71027		.71023	11	64.0	59.0	53.5	53.3	53.4	99.31
12-28-76	--	--	.71026	.71031	.71037		.71027	10	56.7	52.9	46.0	46.0	46.0	98.38

REMARKS

ENGINEERING-SCIENCE ES

TABLE IV-8

FIELD MEASUREMENT SUMMARY

PLANT MOBIL

TANK NO. 400x20

TANK DIAMETER (FT.) 85'

TYPE OF TANK WELDED

TYPE OF ROOF DOUBLE DECK

NO. OF GAPS 6 AREA (FT.^{2}) 0.10

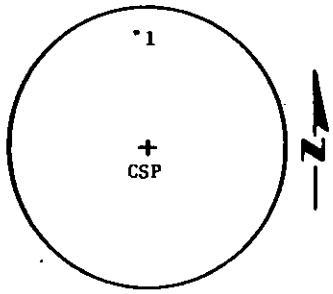

SKETCH OF SAMPLING PORTS

SEAL TYPE SHOE

DEPTH OF STOCK (IN.) 34.2

VOLUME OF STOCK (BBLS) 3,400

HEIGHT OF ROOF (FT.) (20')

COLOR OF ROOF ALUMINUM

HEIGHT OF TANK (FT.) 40'

COLOR OF TANK WHITE AND SANDY BROWN

TYPE OF STOCK REGULAR LEADED GAS

1% Δ WT. = 125×10^{-5} (g/ml)Δp

DATE SAMPLED	RVP @100° F (psi)	ASTM 5% DISTL. (°C)	DENSITIES (g/ml)					NUMBER OF SAMPLES	STOCK TEMPERATURE (°F)					DEPTH OF STOCK (IN.)
									SURFACE		MIDDLE		AVG.	
			MINIMUM	AVERAGE	MAXIMUM	STANDARD DEV.	MIN. 3 AVERAGE		MAX.	MIN.	MAX.	MIN.		
12-7-76	(9)	(50)	.72275	.72277	.72279		.72276	11	57.9	57.1	57.9	57.2	57.5	34.2
12-29-76	--	--	.72289	.72292	.72296		.72290	10	50.8	50.9	50.9	50.9	50.9	34.4

REMARKS NUMBERS IN ( ) WERE ASSUMED.

ENGINEERING-SCIENCE ES

TABLE IV-9

FIELD MEASUREMENT SUMMARY

PLANT SHELL

TANK NO. 47

TANK DIAMETER (FT.) 90

TYPE OF TANK RIVETED

TYPE OF ROOF PONTOON DECK

NO. OF GAPS 28 AREA (FT.^{2}) 1.48

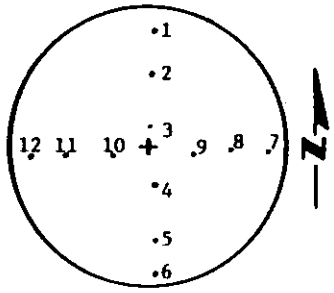

SKETCH OF SAMPLING PORTS

SEAL TYPE SHOE

DEPTH OF STOCK (IN.) 63.88 (10/27/76)

VOLUME OF STOCK (BBLS) 6,100

HEIGHT OF ROOF (FT.) 14'10 15/16"

COLOR OF ROOF WHITE (OXIDIZED)

HEIGHT OF TANK (FT.) 31'1"

COLOR OF TANK WHITE (OXIDIZED)

TYPE OF STOCK SHELL REGULAR

1% Δ WT. = 170×10^{-5} (g/ml)$\Delta\rho$

DATE SAMPLED	RVP @100° F (psi)	ASTM 5% DISTL. (°C)	DENSITIES (g/ml)					NUMBER OF SAMPLES	STOCK TEMPERATURE (°F)					DEPTH OF STOCK (IN.)
									SURFACE		MIDDLE		AVG.	
			MINIMUM	AVERAGE	MAXIMUM	STANDARD DEV.	MIN. 3 AVERAGE		MAX.	MIN.	MAX.	MIN.		
8-20-76	8.2	43	.73827	.73960	.74397	.00157	.73869	12	106.5	81.5	74.8	74.0	74.5	67.06
9-14-76	11.4	48	.73906	.73908	.73913	.00003	.73906	12	72.5	71.2	71.8	71.5	71.5	66.31
9-29-76	10.2	48	.73887	.73892	.73898	.00003	.73889	12	68.8	68.1	68.9	68.9	68.9	64.88
10-13-76	7.8	43	.73881	.73888	.73890		.73883	12	76.9	68.5	68.8	68.5	68.5	64.25
10-27-76	9.9	44	.73877*	.73882*	.73905*		.73877*	15	65.8	65.1	66.0	65.8	65.9	63.88
11-17-76	--	--	.73908	.73912	.73917		.73909	19	80.2	61.9	63.3	63.2	63.3	63.63
12-8-76	--	--	.73906	.73909	.73914		.73906	10	64.4	57.1	57.1	57.0	57.1	63.38
12-22-76	--	--	.73913	.73917	.73921		.73914	12	54.3	54.0	54.9	54.7	54.8	63.25

REMARKS *SUSPECT DATA

ENGINEERING-SCIENCE ES

TABLE IV-10

FIELD MEASUREMENT SUMMARY

PLANT SHELL

TANK NO. 48

TANK DIAMETER (FT.) 90'

TYPE OF TANK RIVETED

TYPE OF ROOF PONTOON

NO. OF GAPS 29 AREA (FT.^{2}) 3.70

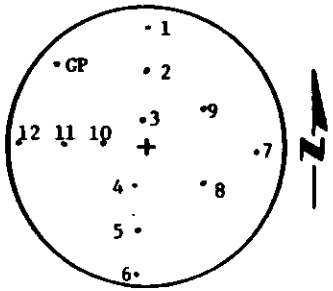

SKETCH OF SAMPLING PORTS

SEAL TYPE SHOE

DEPTH OF STOCK (IN.) 60.0

VOLUME OF STOCK (BBLS) 5,750

HEIGHT OF ROOF (FT.) 14.69

COLOR OF ROOF WHITE

HEIGHT OF TANK (FT.) 32.67'

COLOR OF TANK WHITE

TYPE OF STOCK SHELL REGULAR GASOLINE

1% Δ WT. = 161×10^{-5} (g/ml)$\Delta\rho$

DATE SAMPLED	RVP @100° F (psi)	ASTM 5% DISTL. (°C)	DENSITIES (g/ml)					NUMBER OF SAMPLES	STOCK TEMPERATURE (°F)					DEPTH OF STOCK (IN.)
									SURFACE		MIDDLE		AVG.	
			MINIMUM	AVERAGE	MAXIMUM	STANDARD DEV.	MIN. 3 AVERAGE		MAX.	MIN.	MAX.	MIN.		
8-20-76	10.7	41	.74013	.74149	.74697	.00184	.74031	12	102.5	75.0	74.5	74.1	74.4	60.0
9-14-76	10.8	42	.73982	.73985	.73992		.73982	12	74.0	73.1	72.0	71.9	72.0	62.6
9-29-76	10.1	44	.73965	.73976	.74005		.73967	12	70.0	69.9	69.1	69.2	69.2	61.0
10-13-76	8.2	37	.73972	.73979	.73983		.73975	11	90.2	69.0	70.0	68.2	68.8	60.25
10-27-76	10.9	44	.73968*	.73972*	.73977*		.73969*	15	82.4	65.9	66.0	65.9	66.0	59.88
11-17-76	--	--	.73993	.73998	.74004		.73994	20	77.1	64.8	63.4	63.0	63.2	59.44
12-8-76	--	--	.73991	.73996	.74001		.73994	10	67.0	67.0	57.1	57.0	57.1	59.50
12-22-76	--	--	.73997	.74003	.74008		.73997	12	58.1	55.8	55.0	54.9	54.9	59.38

REMARKS *SUSPECT DATA

ENGINEERING-SCIENCE ES

TABLE IV-11

FIELD MEASUREMENT SUMMARY

PLANT STANDARD - EL SEGUNDO

TANK NO. 192

TANK DIAMETER (FT.) 115

TYPE OF TANK RIVETED

TYPE OF ROOF DOUBLE DECK

NO. OF GAPS 45 AREA (FT.^{2}) .070

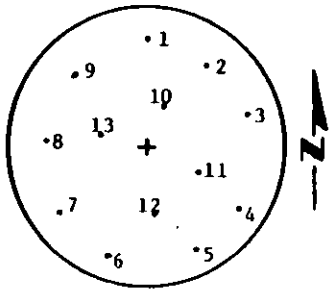

SKETCH OF SAMPLING PORTS

SEAL TYPE TUBE - SHOE

DEPTH OF STOCK (IN.) 56.13

VOLUME OF STOCK (BBLS) 8,850

HEIGHT OF ROOF (FT.) 12.31

COLOR OF ROOF WHITE (OXIDIZED AND DIRTY)

HEIGHT OF TANK (FT.) 30'1"

COLOR OF TANK LIGHT PINK

TYPE OF STOCK LIGHT STRAIGHT RUN GASOLINE

1% Δ WT. = 78×10^{-5} (g/ml)$\Delta\rho$

DATE SAMPLED	RVP @100° F (psi)	ASTM 5% DISTL. (°C)	DENSITIES (g/ml)					NUMBER OF SAMPLES	STOCK TEMPERATURE (°F)					DEPTH OF STOCK (IN.)
									SURFACE		MIDDLE		AVG.	
			MINIMUM	AVERAGE	MAXIMUM	STANDARD DEV.	MIN. 3 AVERAGE		MAX.	MIN.	MAX.	MIN.		
7-29-76			.69426	.69550	.69690	.00074	--	12	--	--	70.5	66.0	68.9	55.0
9-3-76	9.8	43	.69244	.69249	.69262	.00004	.69244	13	73.0	70.0	71.0	70.5	71.0	57.4
9-28-76	11.0	45	.69256	.69260	.69264	.00003	.69257	12	71.9	68.8	69.9	69.1	69.5	56.2
10-12-76	11.2	39	.69272	.69275	.69282		.69272	11	71.4	67.2	70.2	70.0	70.1	55.75
10-26-76	11.0	44	.69265*	.69273*	.69283*		.69267*	15	69.2	66.9	67.9	67.8	67.8	56.13
11-16-76	--	--	.69305	.69307	.69311		.69305	13	66.2	65.6	65.8	65.7	65.8	55.69
12-7-76	--	--	.69326	.69331	.69340		.69328	12	63.9	61.8	61.4	61.4	61.4	55.63
12-21-76	--	--	.69334	.69339	.69351		.69335	12	60.1	59.9	59.8	59.8	59.8	55.44

REMARKS *SUSPECT DATA

ENGINEERING-SCIENCE ES

TABLE IV-12

FIELD MEASUREMENT SUMMARY

PLANT STANDARD

TANK NO. 412

TANK DIAMETER (FT.) 95.5

TYPE OF TANK RIVETED

TYPE OF ROOF PAN DECK

NO. OF GAPS 20 AREA (FT.^{2}) 11.176

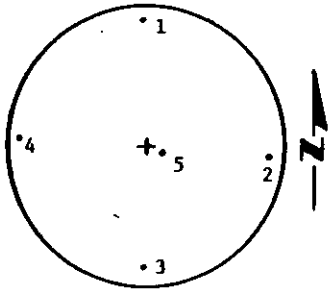

SKETCH OF SAMPLING PORTS

SEAL TYPE SHOE

DEPTH OF STOCK (IN.) 32.0

VOLUME OF STOCK (BBLS) 3,450

HEIGHT OF ROOF (FT.) 15.375

COLOR OF ROOF SILVER (CRUDE COVERS 30%)

HEIGHT OF TANK (FT.) 28.625'

COLOR OF TANK SILVER

TYPE OF STOCK HUNTINGTON BEACH CRUDE

1% Δ WT. = 220×10^{-5} (g/ml)Δp

DATE SAMPLED	RVP @100° F (psi)	ASTM 5% DISTL. (°C)	DENSITIES (g/ml)					NUMBER OF SAMPLES	STOCK TEMPERATURE (°F)					DEPTH OF STOCK (IN.)
									SURFACE		MIDDLE		AVG.	
			MINIMUM	AVERAGE	MAXIMUM	STANDARD DEV.	MIN. 3 AVERAGE		MAX.	MIN.	MAX.	MIN.		
8-5-76	3.2	136	.91725	.91753	.91839		.91734	10	--	--	83.2	78.2	80.3	30.0
9-16-76	3.1	--	.91898	.91921	.91930		.91916	5	88.0	82.1	79.9	76.0	77.0	32.0
10-6-76	2.1	--	.91983	.92044	.92132		.92003	5	75.1	74.1	75.8	75.1	75.5	
10-20-76	2.9	--	.91868	.91880	.91891		.91874	5	75.0	73.0	75.0	73.9	74.1	
11-10-76	--	--	.91986	.91992	.91996		.91990	5	72.1	71.2	72.5	72.1	72.2	
12-15-76	--	--	.91936	.91951	.91957		.91945	7	75.3	67.1	64.4	64.0	64.2	32.1

REMARKS

ENGINEERING-SCIENCE ES

TABLE IV-13

FIELD MEASUREMENT SUMMARY

PLANT STANDARD OIL NORTHAM PUMP STA. LA MIRADA

TANK NO. 497

TANK DIAMETER (FT.) 90'

TYPE OF TANK RIVETED

TYPE OF ROOF PAN DECK

NO. OF GAPS 17 AREA (FT.^{2}) 6.314

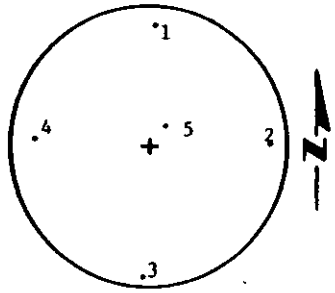

SKETCH OF SAMPLING PORTS

SEAL TYPE SHOE - SINGLE SEAL

DEPTH OF STOCK (IN.) 35.5

VOLUME OF STOCK (BBLS) 3,349

HEIGHT OF ROOF (FT.) 15' 1 1/8"

COLOR OF ROOF SILVER

HEIGHT OF TANK (FT.) 30'

COLOR OF TANK SILVER

TYPE OF STOCK RICH. CRUDE (API GR. 22)

1% Δ WT. = 300×10^{-5} (g/ml)Δp

DATE SAMPLED	RVP @100^0 F (psi)	ASTM 5% DISTL. (^{0}C)	DENSITIES (g/ml)					NUMBER OF SAMPLES	STOCK TEMPERATURE (^{0}F)					DEPTH OF STOCK (IN.)
									SURFACE		MIDDLE		AVG.	
			MINIMUM	AVERAGE	MAXIMUM	STANDARD DEV.	MIN. 3 AVERAGE		MAX.	MIN.	MAX.	MIN.		
8-5-76	0.7	132	.91893	.92117	.92259		.91967	9	--	--	78.0	76.5	77.6	36"
9-16-76	1.2	--	.92101	.92117	.92130		.92112	5	87.5	79	79.1	77.0	78.2	35.5
10-6-76	0.8	--	.92258	.92276	.92293		.92269	5	80.5	78.2	77.9	74.1	76.4	--
10-20-76	0.8	--	.92150	.92157	.92159		.92155	5	74.9	73.5	74.1	73.1	73.7	--
11-10-76	--	--	.92135	.92169	.92187		.92159	5	75.9	71.2	75.9	70.2	73.2	--
12-15-76	--	--	.92246	.92253	.92266		.92248	8	70.0	61.5	60.1	58.7	59.5	--

REMARKS

ENGINEERING-SCIENCE ES

TABLE IV-14

FIELD MEASUREMENT SUMMARY

PLANT STANDARD SAN PABLO TANK FARM - RICHMOND

TANK NO. 2140

TANK DIAMETER (FT.) 115'

TYPE OF TANK RIVETED

TYPE OF ROOF TRUSSED PAN DECK

NO. OF GAPS 116 AREA (FT.^{2}) 1,243

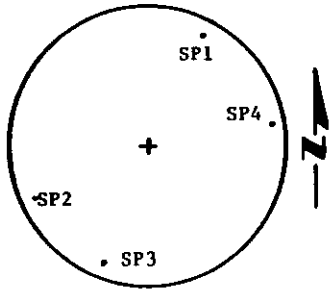

SKETCH OF SAMPLING PORTS

SEAL TYPE SHOE

DEPTH OF STOCK (IN.) 45.8

VOLUME OF STOCK (BBLS) 7,450

HEIGHT OF ROOF (FT.) 11.29

COLOR OF ROOF SILVER ALUMN.

HEIGHT OF TANK (FT.) 30

COLOR OF TANK SILVER ALUMN. (CONSIDERABLE PEELING)

TYPE OF STOCK MIDWAY WAXY CRUDE

1% Δ WT. = _____ (g/ml) Δp

DATE SAMPLED	RVP @100° F (psi)	ASTM 5% DISTL. (°C)	DENSITIES (g/ml)					NUMBER OF SAMPLES	STOCK TEMPERATURE (°F)					DEPTH OF STOCK (IN.)
									SURFACE		MIDDLE		AVG.	
			MINIMUM	AVERAGE	MAXIMUM	STANDARD DEV.	MIN. 3 AVERAGE		MAX.	MIN.	MAX.	MIN.		
9-2-76	3.1		.89150	.90124	.91207		.89568	7	76.5	57.5	71.0	65.0	68.6	45.8
11-1-76	3.4	--	.89541	.90694	.92261		.90187	10	91.9	70.5	69.2	65.6	67.4	45.8
11-29-76	--	--	.88555	.90356	.90799		.89762	7	58.0	52.8	64.0	61.2	62.1	--

REMARKS

ENGINEERING-SCIENCE ES

TABLE IV-15

FIELD MEASUREMENT SUMMARY

PLANT STANDARD OIL - EL SEGUNDO

TANK NO. 9464

TANK DIAMETER (FT.) 100'

TYPE OF TANK WELDED

TYPE OF ROOF PONTOON DECK

NO. OF GAPS 15 AREA (FT.^{2}) .024

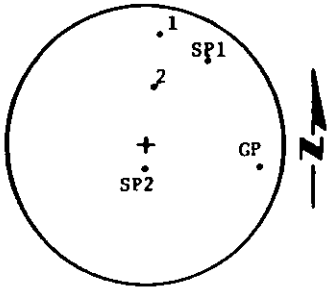

SKETCH OF SAMPLING PORTS

SEAL TYPE TUBE

DEPTH OF STOCK (IN.) 63.2

VOLUME OF STOCK (BBLS) 7,900

HEIGHT OF ROOF (FT.) 18.26'

COLOR OF ROOF NEWLY PAINTED WHITE

HEIGHT OF TANK (FT.) 39.92

COLOR OF TANK DARK PINK

TYPE OF STOCK REFORMATE

1% Δ WT. = 174×10^{-5} (g/ml)$\Delta\rho$

DATE SAMPLED	RVP @100° F (psi)	ASTM 5% DISTL. (°C)	DENSITIES (g/ml)					NUMBER OF SAMPLES	STOCK TEMPERATURE (°F)					DEPTH OF STOCK (IN.)
									SURFACE		MIDDLE		AVG.	
			MINIMUM	AVERAGE	MAXIMUM	STANDARD DEV.	MIN. 3 AVERAGE		MAX.	MIN.	MAX.	MIN.		
8-4-76	3.5	68	.77896	--	.78262	--	.77950	8	--	--	76.5	74.5	75.3	63"
9-3-76	3.7	65	.77704	.77729	.77786	.00026	.77708	8	82.0	72.0	72.5	72.0	72.3	63"
9-28-76	4.1	55	.77674	.77676	.77679	.00002	.77675	6	72.5	70.9	70	70	70	64.1"
10-12-76	2.7	68	.77680	.77684	.77693	--	.77683	6	83.9	70	70.1	70	70	63.3"
10-26-76	3.8	65	.77664*	.77666*	.77668*	--	.77665*	10	79.6	68.5	68.2	67.9	68.1	63.2
11-16-76	--	--	.77686	.77688	.77689	--	.77687	12	76.1	65.1	65.1	64.9	65.0	63.31
12-7-76	--	--	.77693	.77698	.77702	--	.77693	8	69.6	63.5	60.4	60.2	60.3	62.8
12-21-76	--	--	.77697	.77699	.77701		.77698	9	68.9	59.9	58.4	58.1	58.3	62.6

REMARKS *SUSPECT DATA

ENGINEERING-SCIENCE ES

TABLE IV-16

FIELD MEASUREMENT SUMMARY

PLANT TEXACO

TANK NO. 20010

TANK DIAMETER (FT.) 55.33'

TYPE OF TANK WELDED

TYPE OF ROOF DOUBLE DECK

NO. OF GAPS 26 AREA (FT.^{2}) .447

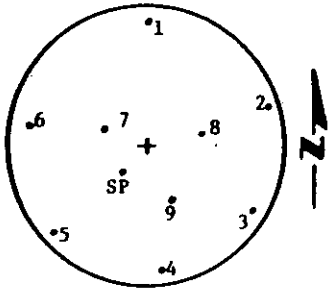

SKETCH OF SAMPLING PORTS

SEAL TYPE SHOE

DEPTH OF STOCK (IN.) 50.0

VOLUME OF STOCK (BBLS) 1,755

HEIGHT OF ROOF (FT.) 21.38

COLOR OF ROOF SILVER

HEIGHT OF TANK (FT.) 48

COLOR OF TANK SILVER

TYPE OF STOCK PREMIUM GASOLINE

1% Δ WT. = 140×10^{-5} (g/ml)$\Delta\rho$

DATE SAMPLED	RVP @100° F (psi)	ASTM 5% DISTL. (°C)	DENSITIES (g/ml)					NUMBER OF SAMPLES	STOCK TEMPERATURE (°F)					DEPTH OF STOCK (IN.)
									SURFACE		MIDDLE		AVG.	
			MINIMUM	AVERAGE	MAXIMUM	STANDARD DEV.	MIN. 3 AVERAGE		MAX.	MIN.	MAX.	MIN.		
9-1-76	8.8	50	.73974	.74029	.74315		.73982	12	69.5	66.5	69.0	68.0	68.2	49.75
9-23-76	8.3	55	.73953	.73956	.73959	.00002	.73954	9	66.2	65.5	67.0	66.2	66.7	50.0
11-1-76	8.8	48	.73976	.73979	.73981		.73977	10	64.6	63.9	64.8	64.5	64.7	50.0
11-29-76	--	--	.73991	.73999	.74003		.73994	11	57.8	57.3	58.0	57.8	57.8	49.5
12-28-76	--	--	.73999	.74000	.74018		.74003	11	53.0	52.2	53.2	52.0	53.0	49.3

REMARKS

ENGINEERING-SCIENCE ES

TABLE IV-17

FIELD MEASUREMENT SUMMARY

PLANT TEXACO - LONG BEACH

TANK NO. 80210

TANK DIAMETER (FT.) 120'

TYPE OF TANK WELDED

TYPE OF ROOF PONTOON DECK

NO. OF GAPS 0 AREA (FT.^{2}) 0

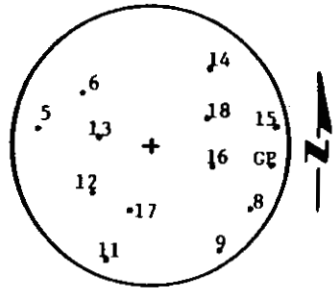

SKETCH OF SAMPLING PORTS

SEAL TYPE TUBE

DEPTH OF STOCK (IN.) 46.1

VOLUME OF STOCK (BBLS) 8,500

HEIGHT OF ROOF (FT.) 17.60

COLOR OF ROOF WHITE

HEIGHT OF TANK (FT.) 40'

COLOR OF TANK WHITE

TYPE OF STOCK BLEND STOCK LIGHT NAPTHA

1% Δ WT. = 45×10^{-5} (g/ml)Δp

DATE SAMPLED	RVP @100° F (psi)	ASTM 5% DISTL. (°C)	DENSITIES (g/ml)					NUMBER OF SAMPLES	STOCK TEMPERATURE (°F)					DEPTH OF STOCK (IN.)
									SURFACE		MIDDLE		AVG.	
			MINIMUM	AVERAGE	MAXIMUM	STANDARD DEV.	MIN. 3 AVERAGE		MAX.	MIN.	MAX.	MIN.		
8-27-76	11.6	40	.65585	.65613	.65671	.00025	.65587	11	93.6	72	69.9	69.8	69.8	45"
9-17-76	9.8	44	.65600	.65602	.65606	.00002	.65600	12	74.1	73	70	70	70	45.1
10-7-76	11.6	35	.65585	.65587	.65589	--	.65585	12	70.2	69.8	69.2	69.1	69.1	46
10-2176	12.2	39	.65586	.65591	.65597	--	.65587	12	68.1	67.8	68.5	68.2	68.4	46.1
11-11-76			.65605	.65616	.65632	--	.65606	13	65.1	62.7	65.2	65.1	65.1	46.1
12-10-76			.65596	.65597	.65599	--	.65596	12	57.4	56.3	56.7	56.3	56.5	45.4

REMARKS

ENGINEERING-SCIENCE ES

TABLE IV-18

FIELD MEASUREMENT SUMMARY

PLANT UNION OIL - WILMINGTON

TANK NO. 5

TANK DIAMETER (FT.) 90'

TYPE OF TANK WELDED

TYPE OF ROOF DOUBLE DECK

NO. OF GAPS 0 AREA (FT.^{2}) 0

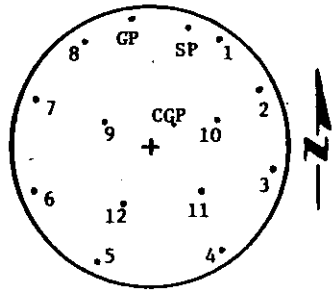

SKETCH OF SAMPLING PORTS

SEAL TYPE TUBE

DEPTH OF STOCK (IN.) 50.1

VOLUME OF STOCK (BBLS) 5,350

HEIGHT OF ROOF (FT.) 12'2"

COLOR OF ROOF YELLOW

HEIGHT OF TANK (FT.) 34'6"

COLOR OF TANK YELLOW

TYPE OF STOCK NAPHTHA

1% Δ WT. = 102×10^{-5} (g/ml)Δp

DATE SAMPLED	RVP @100° F (psi)	ASTM 5% DISTL. (°C)	DENSITIES (g/ml)					NUMBER OF SAMPLES	STOCK TEMPERATURE (°F)					DEPTH OF STOCK (IN.)
									SURFACE		MIDDLE		AVG.	
			MINIMUM	AVERAGE	MAXIMUM	STANDARD DEV.	MIN. 3 AVERAGE		MAX.	MIN.	MAX.	MIN.		
8-11-76	4.5	63	--	--	--	--	--	--	90	84	79.3	77.5	78.2*	51"
8-12-76	--	--	.73029	.73743	.75075	--	.73029	3	81	78.5	78	75.8	76.8	51
10-5-76	5.9	53	.73263	.73924	.74973		.73264	7	68.8	68.4	68.6	68.5	68.5	50.1
10-19-76	5.7	--	.73344	.73842	.74860	--	.73344	7	68.8	68.1	68.9	68.5	68.8	50.1
10-29-76	--	--	.73440	.73443	.73448	--	.73440	7	66.2	65.2	66.0	65.8	65.9	50.1
11-9-76	--	--	.73588	.73814	.74682	--	.73588	9	67.8	66.8	68	67.3	67.5	50.1
11-23-76	--	--	.73856	.73858	.73860	--	.73857	13	68.1	68.0	68.3	68.1	68.2	50.1
12-14-76	--	--	.73857	.73858	.73860	--	.73857	8	61.7	61.2	61.7	61.5	61.6	49.8
12-30-76	--	--	.73875	.73879	.73884	--	.73875	12	--	--	--	--	--	--

REMARKS *POINT NOT PLOTTED - NO DENSITY DATA

ENGINEERING-SCIENCE ES

TABLE IV-19

FIELD MEASUREMENT SUMMARY

PLANT: UNION OIL - WILMINGTON

TANK NO. 330

TANK DIAMETER (FT.) 120'

TYPE OF TANK WELDED

TYPE OF ROOF DOUBLE DECK

NO. OF GAPS 0 AREA (FT.^{2}) 0

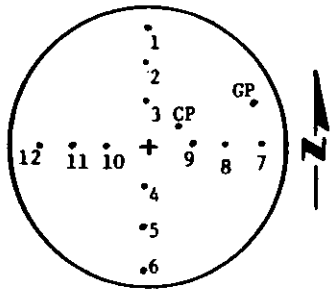

SKETCH OF SAMPLING PORTS

SEAL TYPE TUBE

DEPTH OF STOCK (IN.) 33.0

VOLUME OF STOCK (BBLS) 6,200

HEIGHT OF ROOF (FT.) 12'2 1/2"

COLOR OF ROOF YELLOW

HEIGHT OF TANK (FT.) 42'6"

COLOR OF TANK YELLOW (INSIDE LT. BLUE)

TYPE OF STOCK FCC GASOLINE

1% Δ WT. = 70×10^{-5} (g/ml)Δp

DATE SAMPLED	RVP @100° F (psi)	ASTM 5% DISTL. (°C)	DENSITIES (g/ml)					NUMBER OF SAMPLES	STOCK TEMPERATURE (°F)					DEPTH OF STOCK (IN.)
									SURFACE		MIDDLE		AVG.	
			MINIMUM	AVERAGE	MAXIMUM	STANDARD DEV.	MIN. 3 AVERAGE		MAX.	MIN.	MAX.	MIN.		
7-28-76	--	--	--	--	--	--	--	--	--	--	73	71.5	72.2	30"
8-12-76	8.9	56	.70725	.70833	.71242	.00148	.70740	11	93	83.3	76.8	75.8	76.2	36
9-7-76	8.4	58	.70672	.70686	.70700	.00011	.70672	12	84.9	77.8	75	74	74.4	34.8
10-5-76	8.6	49	.70643	.70662	.70667	--	.70655	12	75.1	70.2	71	70.4	70.5	33
10-19-76	9.2	43	.70658	.70663	.70668	--	.70660	12	76.1	71.1	70.8	70.1	70.3	33.1
10-29-76	--	--	.70659	.70663	.70665	--	.70662	4	72.2	68	68.5	67.9	68.1	33
11-9-76	--	--	.70667	.70668	.70670	--	.70667	12	70.8	67.1	67.9	67.2	67.4	33
11-23-76	--	--	.70668	.70674	.70679	--	.70670	13	69.3	65.4	65.6	65.3	65.4	32.9
12-3-76	--	--	.70668	.70669	.70670	--	.70668	12	67.0	64.9	62.9	62.6	62.7	32.9

REMARKS

ENGINEERING-SCIENCE ES

TABLE IV-20

FIELD MEASUREMENT SUMMARY

PLANT UNION OIL TORRANCE

TANK NO. 100514

TANK DIAMETER (FT.) 135'

TYPE OF TANK RIVETED

TYPE OF ROOF PONTOON DECK

NO. OF GAPS 72 AREA (FT.^{2}) 6.9

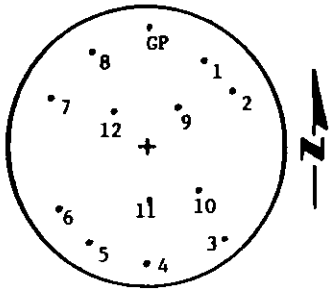

SKETCH OF SAMPLING PORTS

SEAL TYPE TUBE - SHOE

DEPTH OF STOCK (IN.) 74.0

VOLUME OF STOCK (BBLS) 14,900

HEIGHT OF ROOF (FT.) 6.17

COLOR OF ROOF SILVER

HEIGHT OF TANK (FT.) 41'

COLOR OF TANK WHITE

TYPE OF STOCK UNLEADED GASOLINE

1% Δ WT. = 160×10^{-5} (g/ml)$\Delta\rho$

DATE SAMPLED	RVP @100° F (psi)	ASTM 5% DISTL. (°C)	DENSITIES (g/ml)					NUMBER OF SAMPLES	STOCK TEMPERATURE (°F)					DEPTH OF STOCK (IN.)
									SURFACE		MIDDLE		AVG.	
			MINIMUM	AVERAGE	MAXIMUM	STANDARD DEV.	MIN. 3 AVERAGE		MAX.	MIN.	MAX.	MIN.		
8-13-76	8.7	55	.73897	.74005	.74193	.00093	.73902	12	82.8	72	71.1	70.6	70.9	74.5'
9-17-76	8.7	45	.73781	.73784	.73786	.00002	.73782	14	89.9	71.5	68.5	68.1	68.3	74.5
10-7-76	8.2	53	.73801	.73803	.73804	--	.73802	12	92.8	70.8	68.4	68	68.1	74.5
10-21-76	8.3	--	.73807	.73809	.73812	--	.73807	10	72.8	69.7	67.8	67.8	67.8	74.2
11-11-76	--	--	.73827	.73832	.73847	--	.73829	12	74.4	67.1	64.8	64.1	64.3	74
11-24-76	--	--	.73829	.73832	.73836	--	.73829	14	75.9	61.9	61.2	61.0	61.1	72.6
12-16-76	--	--	.73843	.73844	.73846	--	.73844	13	70.5	55.2	54.0	53.8	54.0	72.1

REMARKS

ENGINEERING-SCIENCE ES

TABLE IV-21

MEASURED EMISSION RATE

Tank Name	Number of Weathering Days	Estimated Density Change ($x10^{-5}$ g/ml)	Density Change Required for ($x10^{-5}$ g/ml)		Emission Rate	
			1% Weight Loss	1% Volume Loss	(lbs/day)	(bbls/year)
ARCO 134	77	5	120	103	33	55
Exxon 1757	36	34	192	152	49	87
Gulf 80005	62	0	132	112	0	0
Lion 428	96	46	82	74	108	175
Mobil 400x20	28	14	125	103	35	60
Shell 47	84	29	170	139	32	55
Shell 48	84	30	161	132	33	57
Standard 192	83	80	78	70	265	445
Standard 9464	83	23	174	142	34	56
Texaco 20010	96	50	134	114	20	33
Texaco 80210	84	5	46	43	25	43
Union 330	59	14	70	64	52	84
Union 100514	90	62	159	131	167	286

ENGINEERING-SCIENCE ES

CHAPTER V

CORRELATION OF EMISSIONS WITH MEASURED PARAMETERS

CHAPTER V

CORRELATION OF EMISSIONS WITH MEASURED PARAMETERS

GENERAL

The hydrocarbon emissions were measured for thirteen tanks as discussed in Chapter IV. In this Chapter, the measured emissions will be compared to the API equation for estimating loss rates and also to certain parameters that were measured during the study period. All pertinent parameters needed for the API equation were measured. However, it is not reasonable to assume that all parameters that may affect the actual emissions were measured or calculated. For instance, on shoe seals, the pilot plant studies performed by CBI have just recently shown that the condition of the fabric apron above the vapor space between the shoe and the pontoon, has the greatest influence on emission rates for the scenarios they have considered. This parameter was not considered at the beginning of this study and was never measured other than a brief visual inspection. However, it is reasonable to assume that the fabric on newer seals may be in better condition than the fabric on older seals. The age of the shoe seals are known and will be discussed as a possible indicator of other non-measured parameters.

It should be stressed that with only thirteen tanks as basic data points, and considering the large number of possible parameters that may affect the emission rates, only general conclusions regarding trends are possible.

Table V-1 lists the tanks and summarizes what are thought to be the most important of the measured parameters. Most of the tanks contained gasoline with a Reid vapor pressure of 9 psi. The tank diameters ranged from 55 to 153 feet. Most tanks had shoe seals. The measured seal gap space between the tank shell and seal ranged from zero to 8.6 square feet. The number of gaps ranged from zero to 72. The shoe seals were installed between 1951 and 1968 and the tube seals were installed between 1962 and 1976. The measured emissions ranged from nearly zero to 265 pounds per day.

TABLE V-1

STANDING STORAGE LOSS EMISSIONS SUMMARY

Tank	Stock	RVP (psi)	Diameter (ft)	Type(2)	Deck Type(3)	Seal Type(4)	No. Gaps	Gap Area (ft^2)	Emission Rate (lb/day)
ARCO 134	Gasoline	9	153	R	D	S	30	4.535	33
Exxon 1757	Gasoline	9	67	W	P	T	0	0.000	49
Gulf 80005	Gasoline	5	117	R	P	S	23	0.579	0
Lion 428	JP4	6	78	R	P	S	72	8.590	108
Mobil 400x20	Gasoline	9(1)	85	W	D	S	6	0.100	35
Shell 47	Gasoline	10	90	R	P	S	28	1.480	32
Shell 48	Gasoline	10	90	R	P	S	29	3.700	33
Standard 192	Straight Run Gasoline	11	115	R	D	ST	26	0.070	265
Standard 9464	Reformate	4	100	W	P	T	15	0.024	34
Texaco 20010	Gasoline	9	55	W	D	S	26	0.447	20
Texaco 80210	Naphtha	12	120	W	P	T	0	0.000	25
Union 330	Gasoline	9	120	W	D	T	0	0.000	52
Union 100514	Gasoline	9	135	R	P	SW	72	6.900	167

(1) Estimated
(2) R = Riveted tank, W = Welded
(3) D = Pan deck P - Pontoon
(4) S = Shoe, T + Tube, ST = Shoe with tube secondary, SW = Shoe with wiper secondary

ENGINEERING-SCIENCE ES

COMPARISONS WITH API EQUATION

The American Petroleum Institute in their API Bulletin on Evaporation Loss From Floating-Roof Tanks, API Bulletin 2517, February 1962, outlines a suggested procedure for estimating standing-storage loss from floating-roof tanks. The recommended equation is

$$L_y = K_t D^{1.5} \left[\frac{P}{14.7-P} \right]^{0.7} V_w^{0.7} K_s K_c K_p$$

where:

L_y = standing-storage evaporation loss, in barrels per year.

K_t = a tank-type factor which changes as follows:

K_t = 0.045 for welded tank with pan or pontoon roof, single or double seal.

K_t = 0.11 for riveted tank with pontoon roof, double seal.

K_t = 0.13 for riveted tank with pontoon roof, single seal.

K_t = 0.13 for riveted tank with pan roof, double seal.

K_t = 0.14 for riveted tank with pan roof, single seal.

D = tank diameter, in feet [For tanks 150 ft or less in diameter, use $D^{1.5}$; for tanks larger than 150 ft in diameter, use $150^{1.5} \left(\frac{D}{150}\right)$]

P = true vapor pressure of the stock at its average storage temperature, in pounds per square inch absolute.

V_w = average wind velocity, in miles per hour.

K_s = a recommended seal factor:

K_s = 1.00 for tight-fitting seals.

K_s = 1.33 for loose-fitting seals.

K_c = a recommended factor distinguishing between gasoline and crude oil storage:

K_c = 1.00 for gasoline.

K_c = 0.75 for crude oil.

K_p = a recommended paint factor for color of shell and roof:

K_p = 1.00 for light gray or aluminum.

K_p = 0.90 for white.

The above equation was applied to all thirteen tanks in this study. Figure V-1 shows the correlation of measured emissions and those calculated using the API equation. Table V-2 lists the two emission rates for each tank. Nine tanks emit less than the API estimated emissions and four tanks emit more than the API estimated emissions. The emission estimate for Texaco 20010 is very close to the observed emission rate. However, overall the observed emission rates were approximately 58 percent of the calculated emission rates. It would appear that the API 2517 equation overstates the magnitude of the emissions and does not adequately represent the influence of specific parameters.

TABLE V-2

API 2517 CALCULATED VERSUS OBSERVED HYDROCARBON EMISSIONS

Tank	Hydrocarbon Emission Rate (bbls/year) API 2517 Calculated	Observed
ARCO	510	55
Exxon	30	87
Gulf	131	≈ 0
Lion	128	175
Mobil	49	60
Shell 47	237	55
Shell 48	237	57
Standard 192	362	445
Standard 9464	35	56
Texaco 20010	34	33
Texaco 80210	145	43
Union 330	132	84
Union 100514	433	286

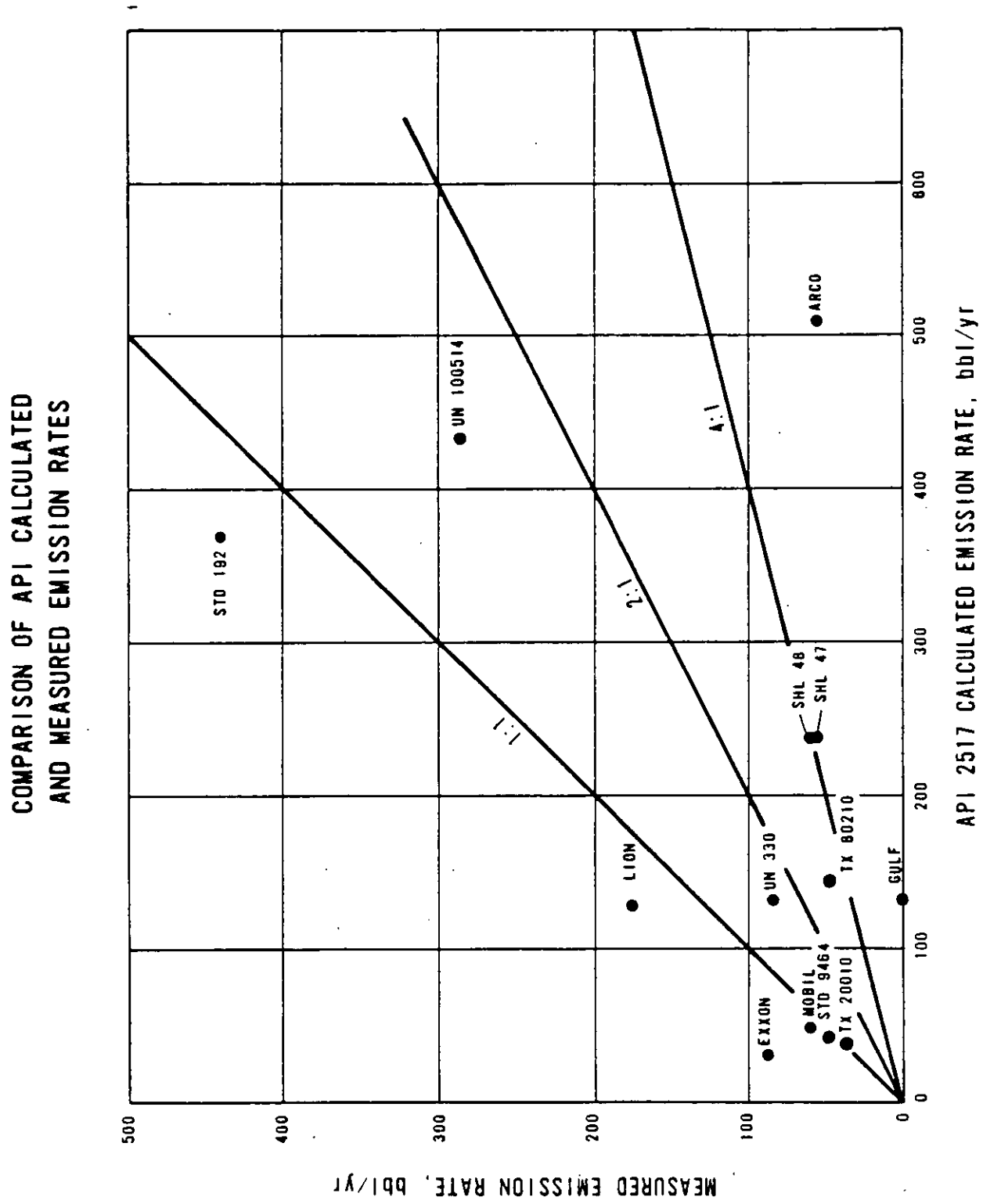
COMPARISON OF API CALCULATED
AND MEASURED EMISSION RATES
API 2517 CALCULATED EMISSION RATE, bbl/yr
MEASURED EMISSION RATE, bbl/yr
0
100
200
300
400
500
800
1:1
2:1
4:1
STD 192
UN 100514
ARCO
SHL 48
SHL 47
TX 80210
GULF
LION
UN 330
EXXON
MOBIL
STD 9464
TX 20010

CORRELATION WITH MEASURED PARAMETERS

Figures V-2 through V-4 show the correlation of measured emission and certain measured parameters that are thought to be important to the production of hydrocarbon emissions. Because of the many parameters involved, caution should be used in evaluating only one parameter at a time; however, it is interesting to gain insight into the possible effect one variable may have on the emission rates. As shown, three tanks have emission rates much higher than the others. Standard 192, Union 100514 and Lion 428 emission rates were from two to five times higher than all the other tanks. Measured parameters such as wind speed, Reid vapor pressure, stock temperature of size of the seal gaps individually do not appear to totally account for the three higher emissions. As mentioned earlier, the recent CBI studies have shown that the tightness of the vapor space under the fabric seal on metallic shoe seals is a very important variable. No tears were visually observed for the Standard 192 tank. A pressure test may be required to make the final judgment concerning this factor for Standard 192. It is interesting to note that the primary seal on Standard 192 was installed in 1951 and represents the oldest primary seal in this study. The next oldest seal is Union 100514 (1952). Figure V-5 shows the measured emission rates versus the year the primary seal was installed on each tank. A visual inspection was made of the fabric apron of the other shoe seals and all had apparent holes in the fabric.

The CBI pilot tank study offers an excellent opportunity to evaluate the influence of one variable while holding all other variables constant. The pilot scale studies on a twenty-foot tank have shown that the emissions vary almost directly with vapor pressure which seems to agree with traditional theoretical considerations. However, several tests would indicate that certain variables that have previously been considered to directly impact the emissions may not be very important.

The data on shoe seals, for example, show that when the gap area is increased by a factor of two the emission actually tended to remain the same or decrease. In the above example, the first gap area was comprised of two gaps each 0.5 inch wide and two feet long. The second gap area was comprised of two gaps each 1.0 inch wide and two feet long. The rim

HYDROCARBON EMISSION RATE AS A FUNCTION OF REID VAPOR PRESSURE AND TANK DIAMETER

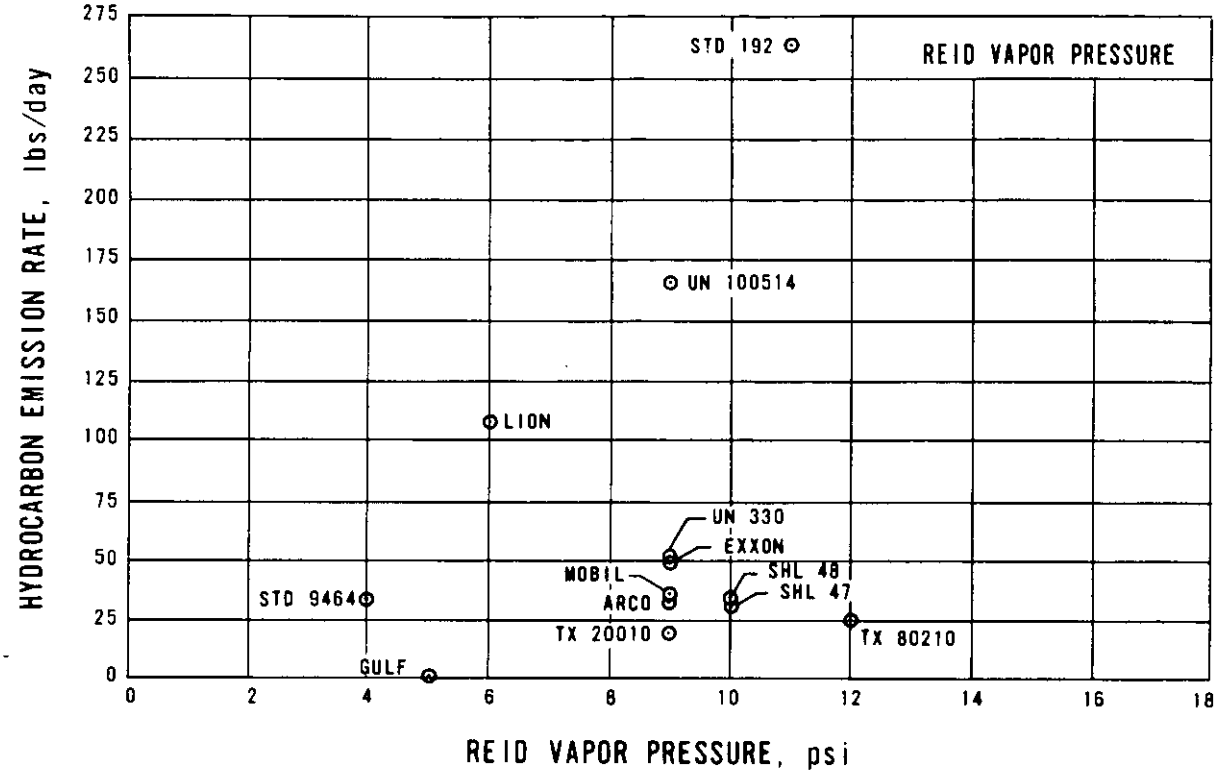

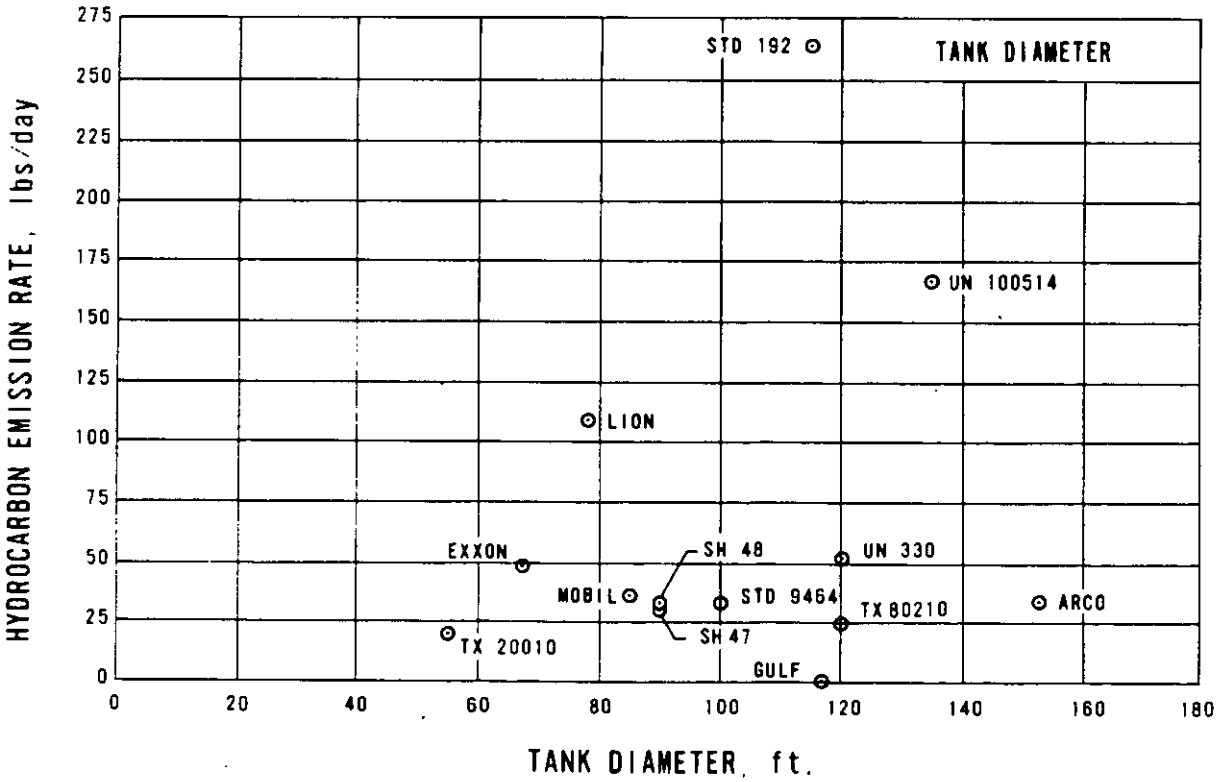

HYDROCARBON EMISSION RATE AS A FUNCTION OF AVERAGE WIND SPEED AND AVERAGE AMBIENT TEMPERATURE

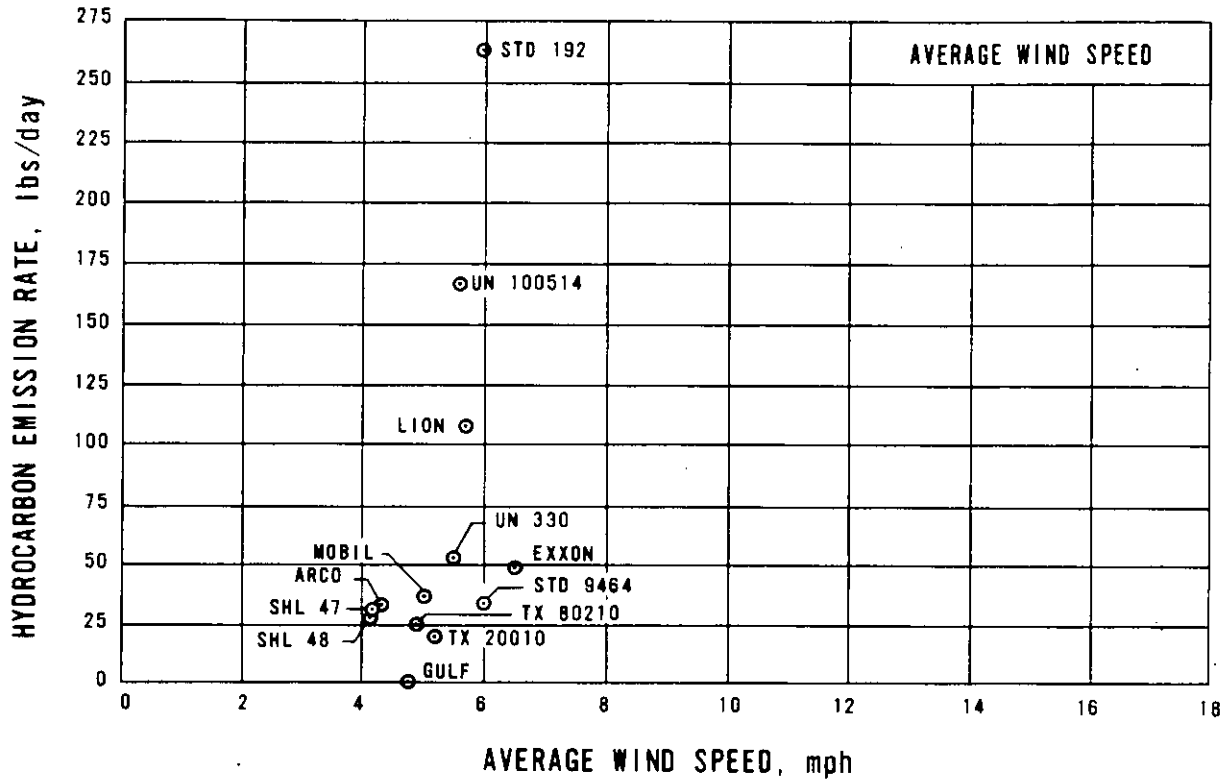

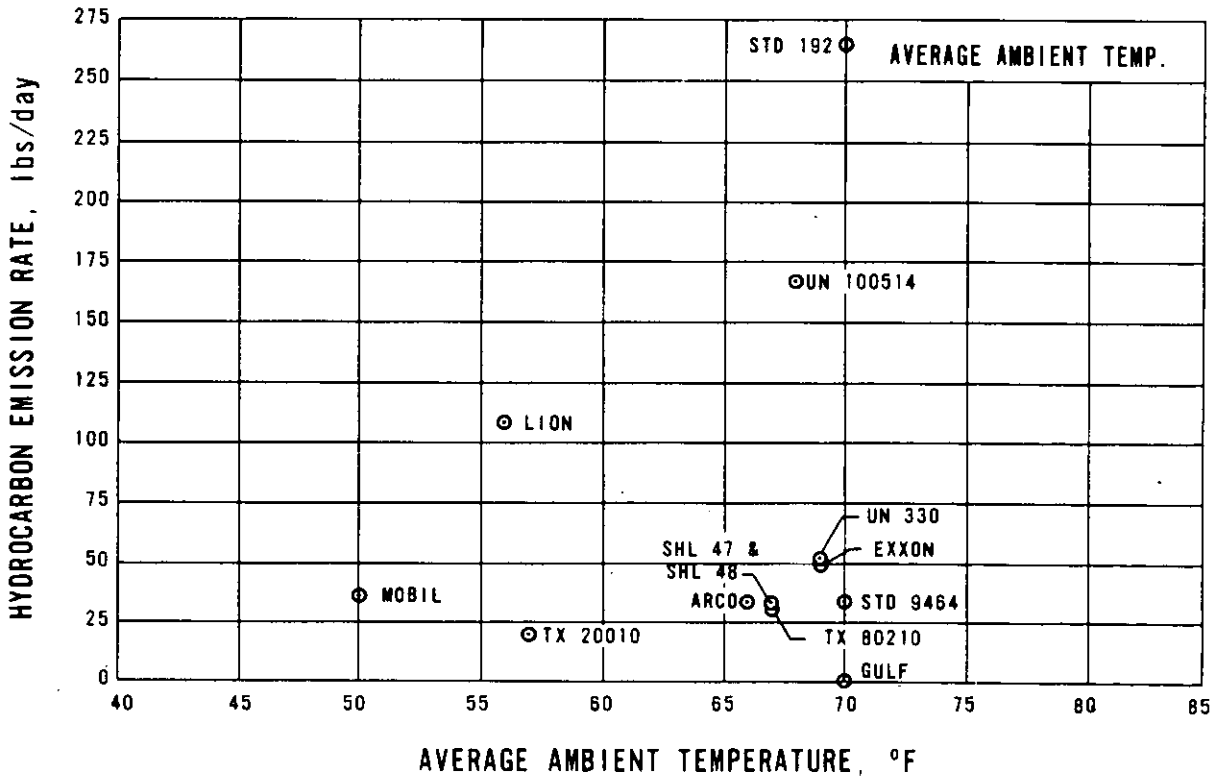

HYDROCARBON EMISSION RATE AS A FUNCTION OF SEAL GAP AREA AND NUMBER OF GAPS

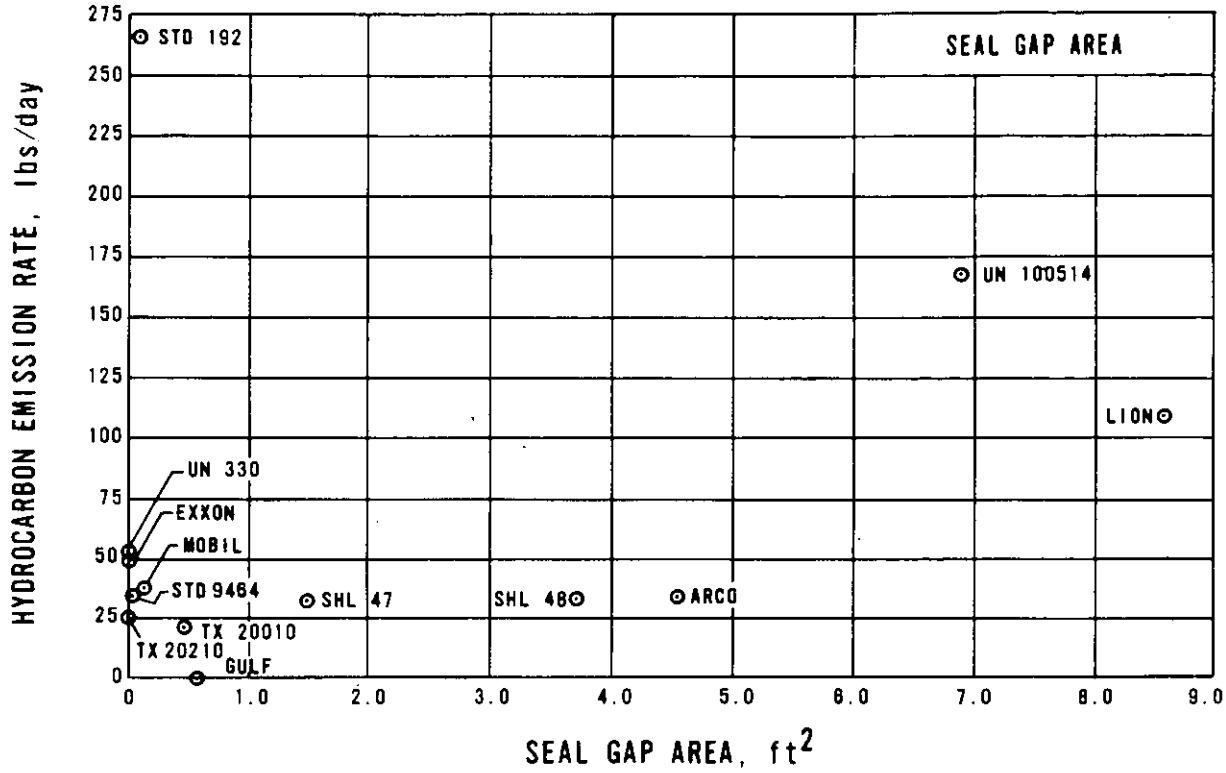

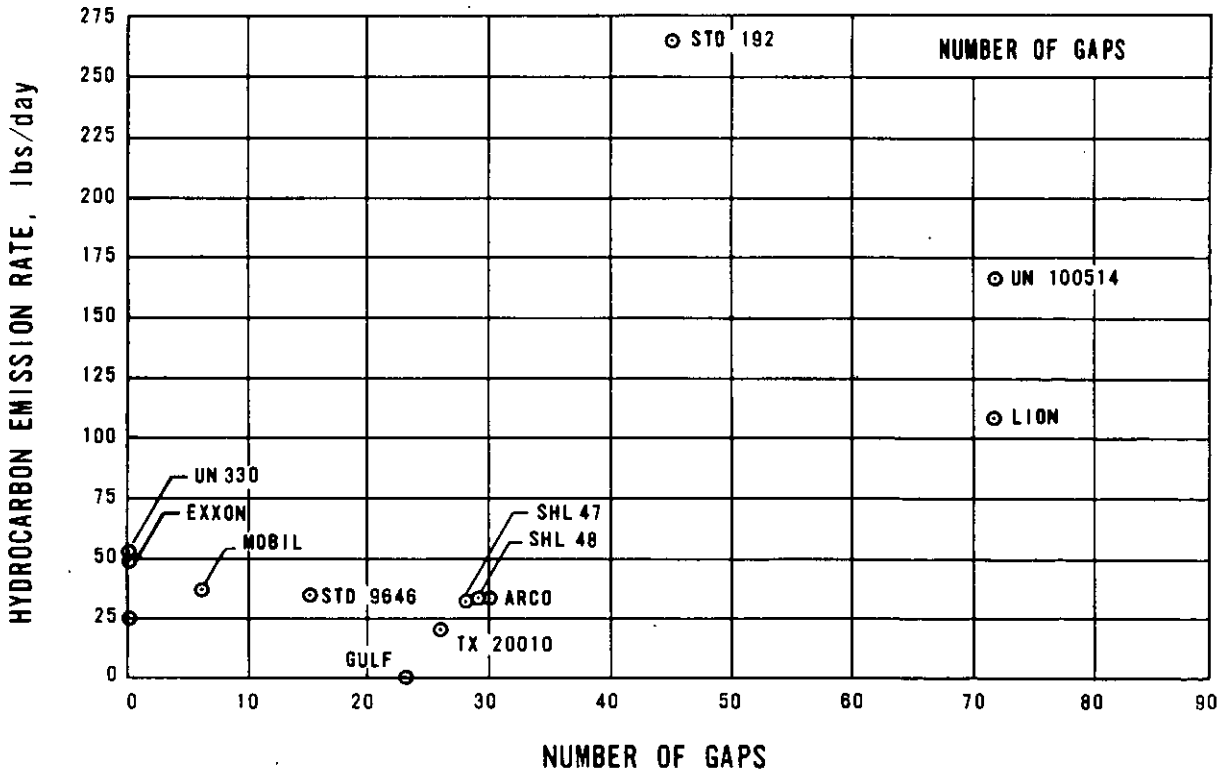

HYDROCARBON EMISSION RATE COMPARED
TO AGE OF PRIMARY SEAL

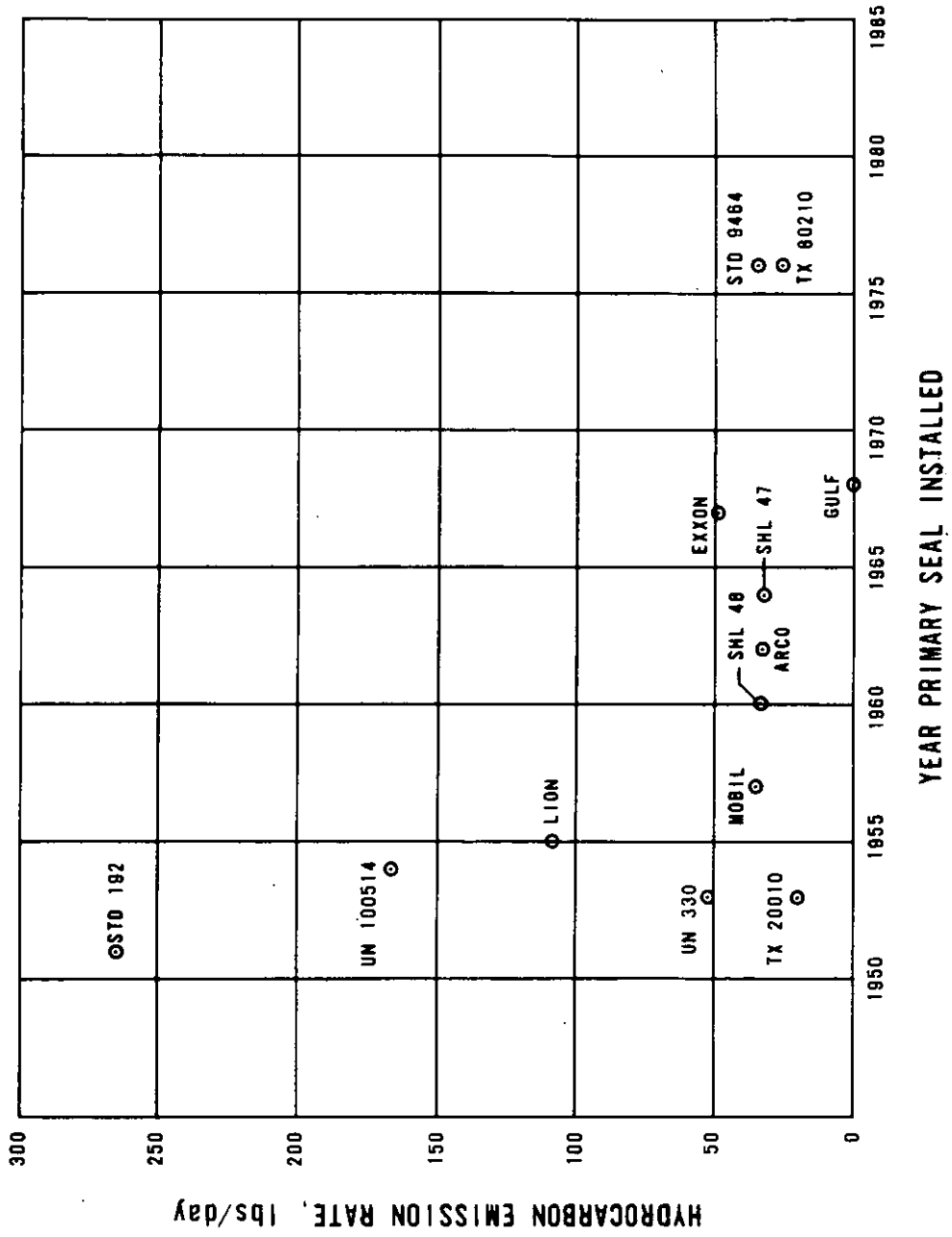

space temperature was heated to 20° F above the bulk liquid temperature and instead of the emissions increasing as one might expect due to the increase in vapor pressure, the emissions tended to decrease or remain the same. Perhaps this indicates that the "noise" level of the test procedure is below the range of those two variables. A significant increase in emissions was noticed when the gap area was increased by a factor of eight. The gap was 0.5 inch wide and thirty feet long (halfway around the circumference) in the above example for the shoe seal. Secondary seals tended to decrease the emissions for the CBI tests. All of the preliminary pilot tests on shoe seals tended to show that the emissions increased with the amount of dilution air blown through the test chamber. This would indicate that wind speed certainly affects the emissions; however, the exact relationship is difficult to determine due to relating the dilution air flow rate to wind speed. Similar results were found with tube seals. In fact, it would appear that a tight fitting (no gap) tube seal would have higher emissions than a tight fitting (no gap) shoe seal. Furthermore, the same gap space area for a tube seal would yield higher emissions than for the same gap space area for a shoe seal.

While the CBI data are much more useful than the field sampling data to show dependency upon one variable, it is of interest to see if similar trends exist in the field data. If all of the thirteen tanks are considered, even those with old seals and obvious fabric apron problems, it would appear that emission may be influenced by Reid vapor pressure, stock temperature, wind speed and to some extent, gap size. However, if the three older tanks, two of which have obvious fabric holes are deleted, then no conclusions can really be drawn that would imply that the emissions are related substantially to Reid vapor pressure, stock temperature, wind speed or gap size. It is apparent that one parallel does exist between the field experiment and the pilot plant test. If the Lion, Standard 192, and Union 100514 tanks are neglected, then the two highest emitters (of the ten remaining tanks) had tube seals on welded tanks with no noticeable gaps. The lowest emission rate was found on Gulf 80005. It has the newest shoe seal (1968) but had 23 gaps that totaled 0.56 ft^2 and observable openings in the fabric apron. However,

the vapor pressure for Gulf 80005 was also one of the lowest in the study.

In general, it does appear that the field data and the pilot test data do agree very well in that tight fitting shoe seals and tight fitting tube seals would lose approximately the same amount of stock. Further, it would appear that tube seals, while decreasing the gap size significantly under most conditions, do not offer an advantage over shoe seals as a pollution control device.

The simple laboratory experiments conducted during this study tend to confirm that tube seals should be more susceptible to wind conditions than shoe seals. CBI also found that wind is more of a factor for tube seals.

The CBI pilot tests tend to show that emission rate has a strong dependency on wind speed and true vapor pressure if all other variables are held constant. If this is true, one would expect that as the ambient wind speed decreased and the stock temperature decreased (affecting true vapor pressure) then the emission rate would also decrease for a particular tank. If the emission rate decreased then the rate at which the average stock density increases would not remain constant. For all tanks in this study, the wind speed and stock temperature have decreased during the study period but the rates at which the densities increased have appeared to remain constant.

Figure V-6 is a plot for Standard 192 (the highest emitter) comparing the changes in density with the observed stock temperatures, and ambient wind speed. As shown, the wind speed decreased from a two week average of 8.9 mph at the end of September to only 4.5 mph at the end of December. The stock temperature decreased from 69° F to 60° F. However, the rate of increase in density seems to have remained constant.

It should be stressed that the influence that only one variable has on the emission rate of a floating-roof tank is at best, difficult to ascertain. A control strategy to reduce the emissions, if required, should consider parameters other than seal gap size. Table V-3 lists all of the seventeen tanks in the study and shows their compliance status with Rule 463 as of January 15, 1975. Five tanks are in compliance and twelve are

STANDARD 192
COMPARISON OF WIND SPEED AND STOCK TEMPERATURE
TO CHANGE IN DENSITY

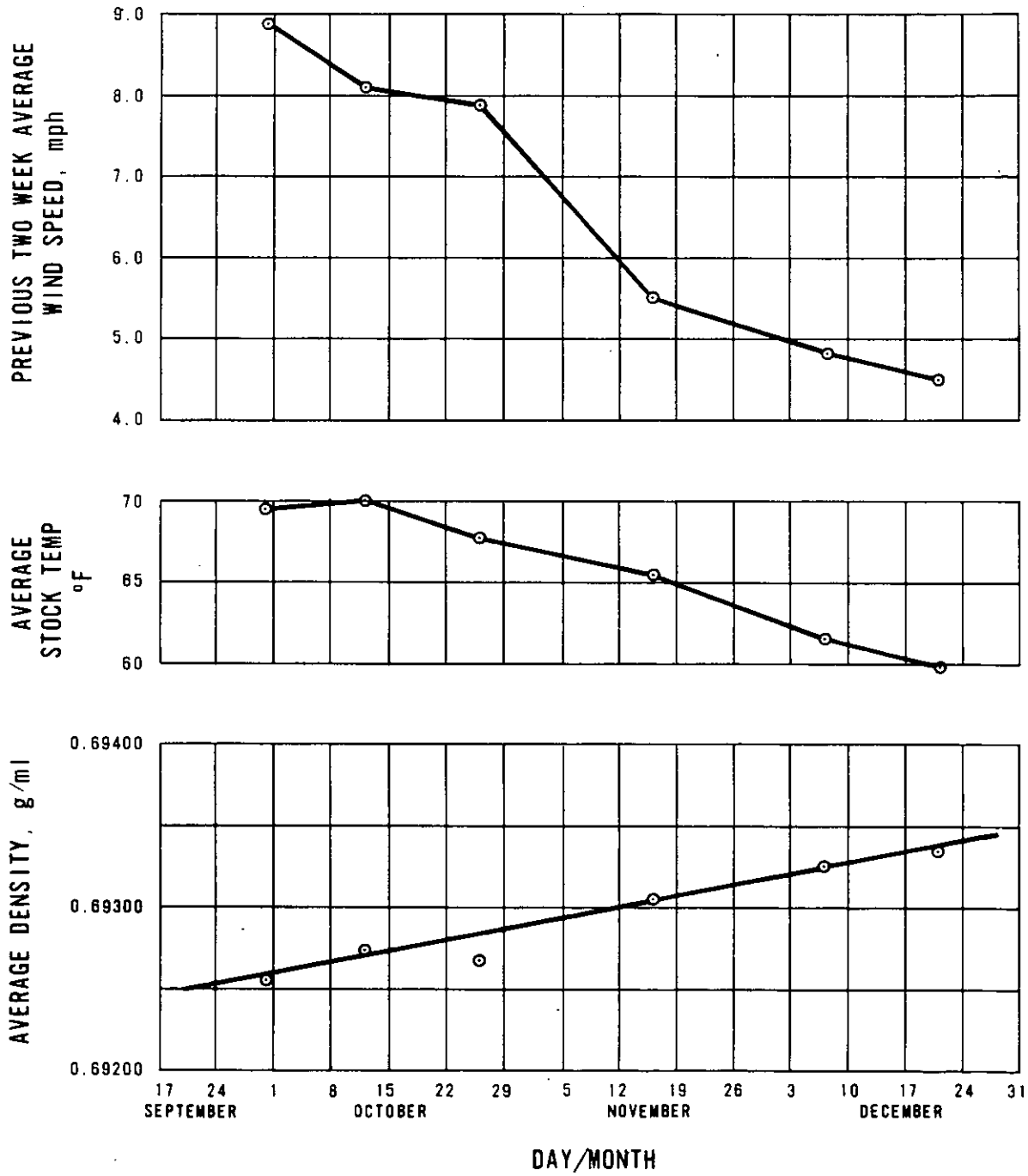

TABLE V-3

COMPARISON OF MEASURED GAPS VERSUS ALLOWABLE GAPS ON TEST TANKS

Tank Identification	Diameter (ft)	No. Gaps >1/8"	Maximum Gap Width (in)	Gap Area (ft^2)	Total Estimated* Gap Length (ft)	Allowable Gap Length (D/6.5 ft)	Compliance Status W/Rule 463 as of 1/15/77
ARCO 134	153	30	1.0	4.535	187.2	23.5	No
Exxon 1757	67	0	0	0.000	0	10.3	Yes
Gulf 80005	117	23	1.25	0.579	39.5	18.0	No
Lion 428	78	72	.75	8.590	251.0	12.0	No
Mobil 400x20	85	6	.50	0.100	6.0	13.1	No
Shell 47	90	28	.50	1.480	7.9	13.8	No
Shell 48	90	29	.50	3.700	267.5	13.8	No
Standard 192	115	45	.75	0.070	1.9	17.7	No
Standard 9464	100	15	.19	0.024	2.1	15.4	Yes
Texaco 80210	120	0	0	0.447	0	18.5	Yes
Texaco 20010	54	26	.5	0.000	49.9	8.3	No
Union 5	90	0	0	0.000	0	13.8	Yes
Union 330	120	0	0	0.000	0	18.5	Yes
Union 100514	135	72	.75	6.900	172.2	20.7	No
Standard 412	96	20	1.0	11.176	300.0	14.8	No
Standard 497	90	17	.5	6.314	280.0	13.8	No
Standard 2140	115	116	1.0	1.243	62.9	17.7	No

* Note: This number represents the distance along which the seal did not contact the tank wall.

ENGINEERING-SCIENCE ES

not. Only those tanks with tube seals met the gap size rule. Similar tanks that did not meet the rule had emission rates lower than the five in compliance.

CHAPTER VI

FURTHER DISCUSSION OF SIGNIFICANT PARAMETERS

CHAPTER VI

FURTHER DISCUSSION OF SIGNIFICANT PARAMETERS

Table VI-1 presents for comparison a list of variables or factors included in the API-2517 equation for emission loss from floating-roof tanks and in the ES correlation study of field test data. The API equation is defined in Chapter V. There were no pan-type roofs in the ES field study, and the API study did not include double-deck type roofs. Therefore, it is not known if any effect on emission loss can be attributed to differences between pan, pontoon, or double-deck roofs.

In the ES study, tank construction, roof type, and seal type were represented as categories for correlation purposes. In the API equation, the effects of these factors were combined in a variable, k_t, for which numerical magnitudes were given depending on the combination of tank, roof, and seal type for a specific tank. Also, the API prediction equation does not distinguish tube or shoe type seals, and does not explicitly treat seal gap area or number of seal gaps as an emission rate variable. It does, however, implicitly include the effect in a constant, k_s, for old or new seals, and in the k_t variable.

One of the main differences, then, between the API prediction equation and the ES field experiment data correlation studies is that ES examined the new field measured data to evaluate any direct quantitative relationship between seal gap numbers or area and emission loss independent of type of roof and seal, whereas the API equation assumes implicitly that gap areas are always more for old seals, or riveted tanks with a single seal on its roof. However, the API equation also implicitly assumes that the emission loss from any particular tank/roof/seal type combination is independent of seal gap area since the values of k_s and k_t are fixed once the age factor and tank/roof/seal combination are specified.

TABLE VI-1

COMPARISON OF ENGINEERING-SCIENCE FIELD TEST VARIABLES TO API 2517 EQUATION VARIABLES

Engineering-Science Field Test Study Emission Loss Correlating Variable or Factor*	API 2517 Emission Loss Equation Variable or Factor
1. Roof Type (Pontoon - double deck)	k_t, function (pan - pontoon)
2. Roof Color	Paint Factor, K_p
3. Tank Diameter, D (ft)	D (ft)
4. Seal Type (shoe, tube or other	k_t, function (single seal - double seal)
5. Seal Gap Area (ft^2)	k_s, function (new - old)
6. Number of Seal Gaps	-
7. Reid Vapor Pressure ,RVP or True Vapor Pressure (psia)	True Vapor Press., p_v(psia) k_c, function (gasoline - crude oil)
8. ASTM Dist. Curve Slope	
9. Average Stock Temperature (°R)	-
10. Emission Rate (lb/day, bbls / year)	L_y(bbls / year)
11. Average Ambient Temperature (°R)	-
12. Average Maximum Hour Temperature (°R)	-
13. Average Day Temperature Range, ΔT (°R)	-
14. Average Ambient Pressure (in. Hg)	14.7 (psia)
15. Average Wind Speed (mph)	V_w (mph)
16. Average Maximum Hour Wind Speed (mph)	-
17. Average % Cloud Cover	-
** Tank Type (Welded - Riveted)	k_t, function (welded - riveted)

* As numbered on summary data sheets.
** Not numbered on data sheets.

Therefore, although the measured emission loss for the 13 storage tanks can be compared to the emission loss predicted by the API equation, it is not feasible to make a direct comparison of the quantitative effect of each variable or factor or to assess the accuracy of the values assigned to exponents or k factors in the API equation.

In general, however, the ES laboratory experiments on gasoline evaporation rates, and the CBI/SOHIO pilot tank and other tank tests show trends of increasing emission rates as wind speed and seal gap area are increased.

In the case of the ES field test study data, multiple linear regression analyses were conducted using standard computerized statistical programs (CORRE/STPRG) to examine the relationship of the measured or observed values of the variables listed in Table VI-1 to the measured emission rates. In brief, the statistical analysis program conducts a multiple stepwise linear regression (STPRG) in a fashion that orders the variables from greatest to least correlation. The program was exercised in the logarithmic mode to produce a power factor relationship of the type:

$$Y = ax_1^{b_1} x_2^{b_2} x_3^{b_3} \text{----}$$

where Y is the dependent variable and x1, x2, etc., are independent variables. This form was selected since in the API-2517 equation, the emission rate (L_y) was a function of $D^{1.5}$, $P^{0.7}$, and $Vw^{0.7}$.

The results of the regression analyses were that for the measured field data from the 13 gasoline storage tanks, the emission rates were more correlated with the values of wind speed, RVP, ASTM distillation factor, gap area (Ag), and stock temperature than with number of gaps, tank diameter, and the other variables. In order of higher to lower correlation for the first five variables:

L_y = f (V_w, RVP, gap area, ASTM distillation factor, stock temperature)

It is considered that it might be as appropriate to compute TVP or P for use in the correlation analysis instead of RVP and the ASTM distillation factor. In that case, the correlation order of the most significant sets of test variable values is:

$$L_y = f\ (V_w,\ P_v,\ A_g).$$

The multiple correlation coefficient for this set is approximately 0.8. However, an accurate mathematical relationship for these variables in the form of:

$$L_y = a\ V_w^{b1} P_v^{b2} A_g^{b3}$$

is not obtained since the standard error of the regression coefficient (the b exponents in this case) for each variable is significant (due to the data scatter) and due to power factor format of the relationship, considerable uncertainty results. This uncertainty is a result not only of the data scatter but of the relatively small number of test tanks (13) compared to the number of variables (15).

In addition, the resulting expression cannot be compared directly to the API equation since A_g here is a continuous variable expressed in an experimental relationship to L_y, whereas in the API equation, the gap factor is implicitly assumed to be a fixed linear value for each tank/roof/seal combination.

The Battelle report for the EPA (see Bibliography) concluded that the API-2517 standing storage loss equation was of questionable accuracy. More specifically, a statistical evaluation of the API wind speed and vapor pressure data scatter indicated that the exponents of 0.7 for both the V_w and vapor pressure factors could not be confirmed within reasonable certainty limits.

The API emission loss equation was developed from data compiled on storage tanks 20 to 40 years ago. Its applicability for estimating losses from storage tanks existing today is in question in view of the previous discussion. The direct comparison of measured emission

rates to those predicted by API-2517 was shown in Figure V-1. Ignoring the case of the Gulf Oil tank, the API equation predicted losses ranging from one-third to nine times the losses measured by ES. In seven cases, the API prediction was significantly greater, and in four cases, it was significantly less. From this result, and without additional data, it is considered that the API expression is not in the form that will produce reasonably representative estimates of emission losses. Additionally, the inconsistency of the API predictions compared to the ES measured emissions make it difficult to identify and evaluate potential causes for the differences. It remains unclear whether an emission loss relationship can be expressed in the form of the API equation, or, in view of the order of relative correlation between the key factors as indicated by the ES correlation analyses, how to develop with less uncertainty the coefficients or exponents for the variables which should be included in the emission loss estimation expression. Therefore, no further attempts were made to develop an emission loss equation by statistical correlation analyses or analytical techniques.

An expression for the evaporation rate of volatile liquids into air has been derived in the form:

$$N_A = \frac{D_{AB}P}{RTz} \ln \left(\frac{P_{B2}}{P_{B1}}\right)$$

N_A = evaporation rate per unit liquid surface area.

D_{AB} = diffusively constant for liquid A.

P,T,R = air pressure, temperature, and gas constant.

z = stagnant air space height.

P_{B2} = air partial pressure at top of container.

P_{B1} = air partial pressure at surface of liquid.

using n-pentane versus a representative petroleum liquid:

$$D_{AB} = 0.075\ cm^2/sec = 6.29\ ft^2/hr.$$

$$P_{A1} = 6.8\ psia \quad (P_{B1} = 7.9\ psia)$$

$$P_{B2} = 14.7\ psia$$

$$\text{Then, } N_A = \frac{4.65x10^{-4}}{z} \quad \left(\frac{lb - mole/hr}{ft^2}\right).$$

Assuming the molecular weight of gasoline is approximately 55 lb/lb-mole, the z for tube seals in a floating-roof tank is about two feet, and the liquid surface exposed in the rim space is one-half feet wide, then for a 100-foot diameter tank:

$$L_y = \frac{4.65x10^{-4}}{2} \times 55 \times 100\ \pi \times 1/2 \times 24 = 48\ lb/day$$

This result is within a reasonable range of the values of measured emissions from the 13 tanks (20 to 265 lb/day for tank diameters ranging from 55 to 153 feet). Therefore it is considered that further evaluation of the application of the theoretical evaporation equation to the real tank situation may prove to be of value.

CHAPTER VII

BEST AVAILABLE SEAL TECHNOLOGY

CHAPTER VII

BEST AVAILABLE SEAL TECHNOLOGY

GENERAL

Prior to World War II, most crude oil and petroleum products with vapor pressures less than 11 or 12 psia were stored in fixed-roof tanks. However, there was some floating-roof technology as early as the 1920's. It had been developed primarily to conserve product. Floating roofs are generally up to a foot or more smaller in diameter than the inside of the tank to allow for variations in the diameter of tank caused by settling, wind load, differential expansion, rivet heads, butt straps, lap welds, corrosion, etc. Bulges in tank shells are particularly prevalent in tanks 100 feet or greater in diameter.

Two general techniques are used to seal the annular space between the floating roof and the tank shell. When first introduced all floating-roof tanks had metal shoe seals which pressed against the tank shell and a flexible fabric covered the space between the roof rim and the top of the shoe seal. More recently tube seals (fabric covered foam or liquid filled fabric) has been used to seal the annular space.

The objective of this task was to determine by surveys the best available seal technology for floating-roof tanks, particularly for upgrading existing tankage where necessary. Major emphasis was placed on seal technology (both primary and secondary) for pontoon-type and double deck open floating-roof tanks. Both crude oil and distillate tanks were studied. Two types of surveys were conducted.

The first survey of available tank seals consisted of personal interviews by telephone and correspondence with both manufacturers and users of floating-roof tanks and with tank erection contractors, consulting engineers, and governmental air pollution control engineers. Various brochures and reports of manufacturers and users yielded information of value as did attendance at several variance hearings concerning seal technology. In a few cases, personal visits were made to installations of interest. Names of organizations and persons interviewed or providing information are listed in Appendix E.

In the second survey, installed tank seals were reviewed with respect to gap size. Over 200 tanks in the South Coast Air Basin were analyzed. A data sheet for each tank, showing inspection results at each roof level, appears in Appendix F.

SURVEY OF AVAILABLE SEALS

Primary Seals

Primary seals are designed to prevent vapor loss from exposed liquid in the annular space between the rim of the floating-roof and the tank shell, usually about eight inches. They may be mechanical or tube type.

The mechanical seals are vertical shoes (metal plates about 30-36 inches in vertical dimension) connected by braces to the floating-roof around its entire circumference. The shoes are held against the tank wall by various types of springs or weighted levers. The open space between the top of the shoe and the rim of the roof is closed by a suitable coated fabric. Thus the only portion of the liquid in the tank which is exposed to the atmosphere is that between the shoe and the tank wall. In a perfectly round, smooth surface the gap between the shoe and the tank shell is almost nil. In actual tanks imperfections on the tank wall (e.g., weld seams, rivet heads, butt straps, solid build-ups such as wax) or the larger imperfect areas (bulges, dents, out-of-roundness resulting from settling, wind, thermal strain, etc.) result in an increase in gap size for varying distances around the circumference of the tank. All major tank manufacturers supply mechanical shoes of various designs. A typical design is shown in Figure VII-1.

The tube seal is a flexible tube usually filled with liquid or a compressible solid foam. The tubes are held between the rim of the roof and the tank shell usually at or above the liquid level so that they completely fill the annular space. The weight of the liquid of the resilience of the foam is such that the seal can adapt itself to wide changes in tank dimensions and even fill in to some extent at least, around protruding rivets and shell imperfections.

WEIGHT ASSISTED METALLIC SHOE SEAL

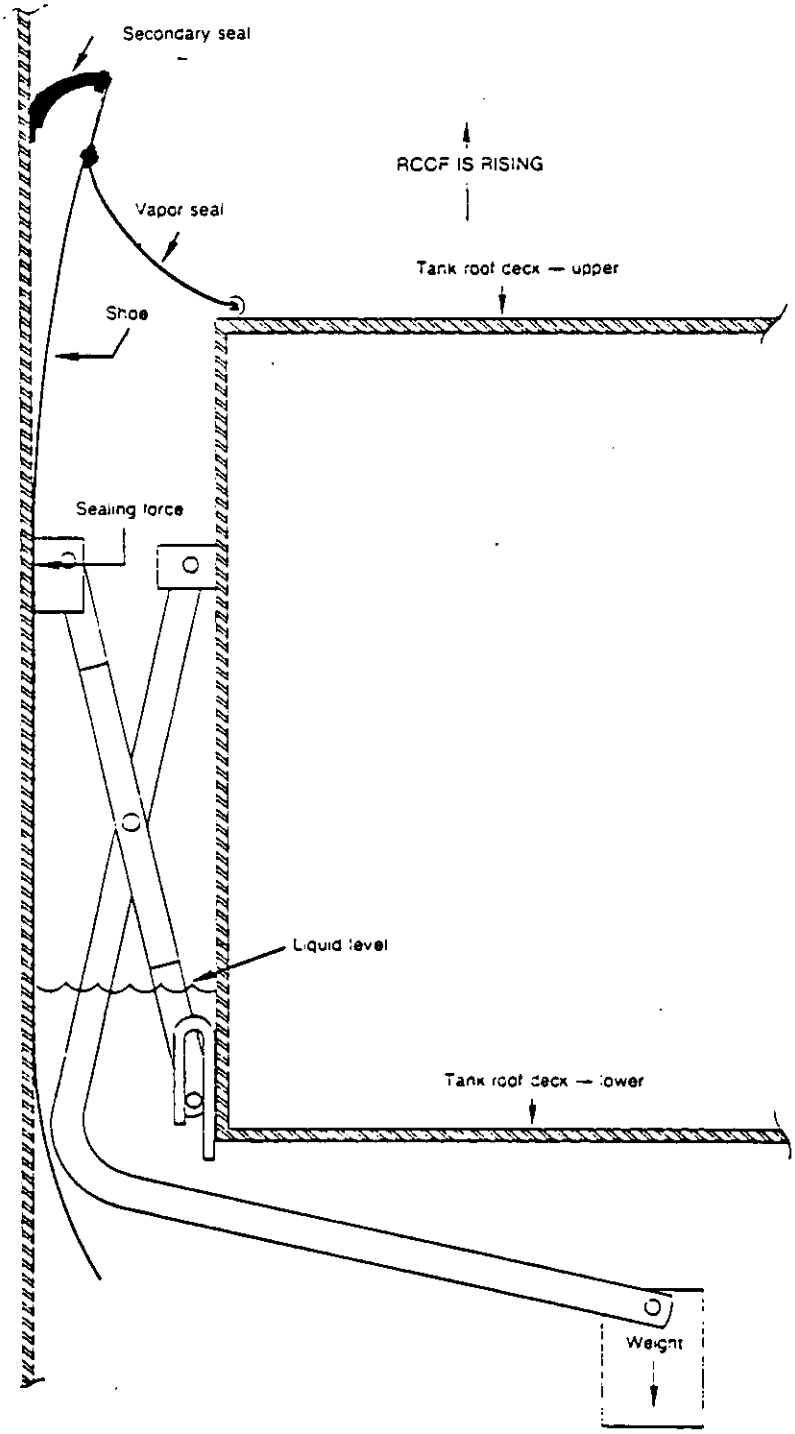

Seals offered by the major tank manufacturers vary considerably in design detail. The seal itself is usually a reinforced fabric (e.g., nylon) coated with synthetic elastomer, resistant to abrasion and hydrocarbons. When a liquid is used inside the tank tube it is commonly a petroleum distillate or similar material that will not contaminate tank contents in case of a puncture.

The foam seal most often is an open-celled polyurethane foam. Nearly all tank manufacturers offer one or more types of foam seals. They vary in density, compressibility, shape (round, hexagonal, octagonal, etc.) and diameter (up to 14 inches). Basically, the foam seal may be considered as a doughnut or hoop-like log held between the rim of the floating-roof and the tank shell, either partially immersed in the liquid in the tank or in the vapor space just above the liquid. Typical designs are shown in Figures VII-2 and VII-3.

Major tank manufacturers offering primary tube seals in Southern California include: Chicago Bridge and Iron Company, American Bridge Division of U.S. Steel, Pittsburgh - Des Moines Steel Company, and GATX Tank Erector Corporation.

Several other manufacturers offer or have developed special designs of primary seals similar to tube seals. Chiyoda Chemical Engineering and Construction Company, Inc. offers a vapor sealing device built in the shape of a pair of lips and called "Kisseal" (Figure VII-4). The device is made of polyurethane foam bonded to a cover sheet of rubber-reinforced nylon with an acrylic adhesive. The shape of the seal allows it to act as a double seal with respect to small wall deformations. The manufacturer claims that whereas foam logs may partially fail by splitting when the annular space narrows, the design of the "Kisseal" mitigates such action. The "Kisseal" has been in use in welded tanks in the Orient for ten years but has not been used on riveted tanks. No installations in the United States are known.

During an interview with representatives of Chiyoda, it was learned that the chief attribute of the seal, long life, is due to design of the seal which mitigates compressive forces, and thereby promotes

SR-7 HORTON FABRIC SEAL (RESILIENT TYPE) FOR HORTON FLOATING ROOFS

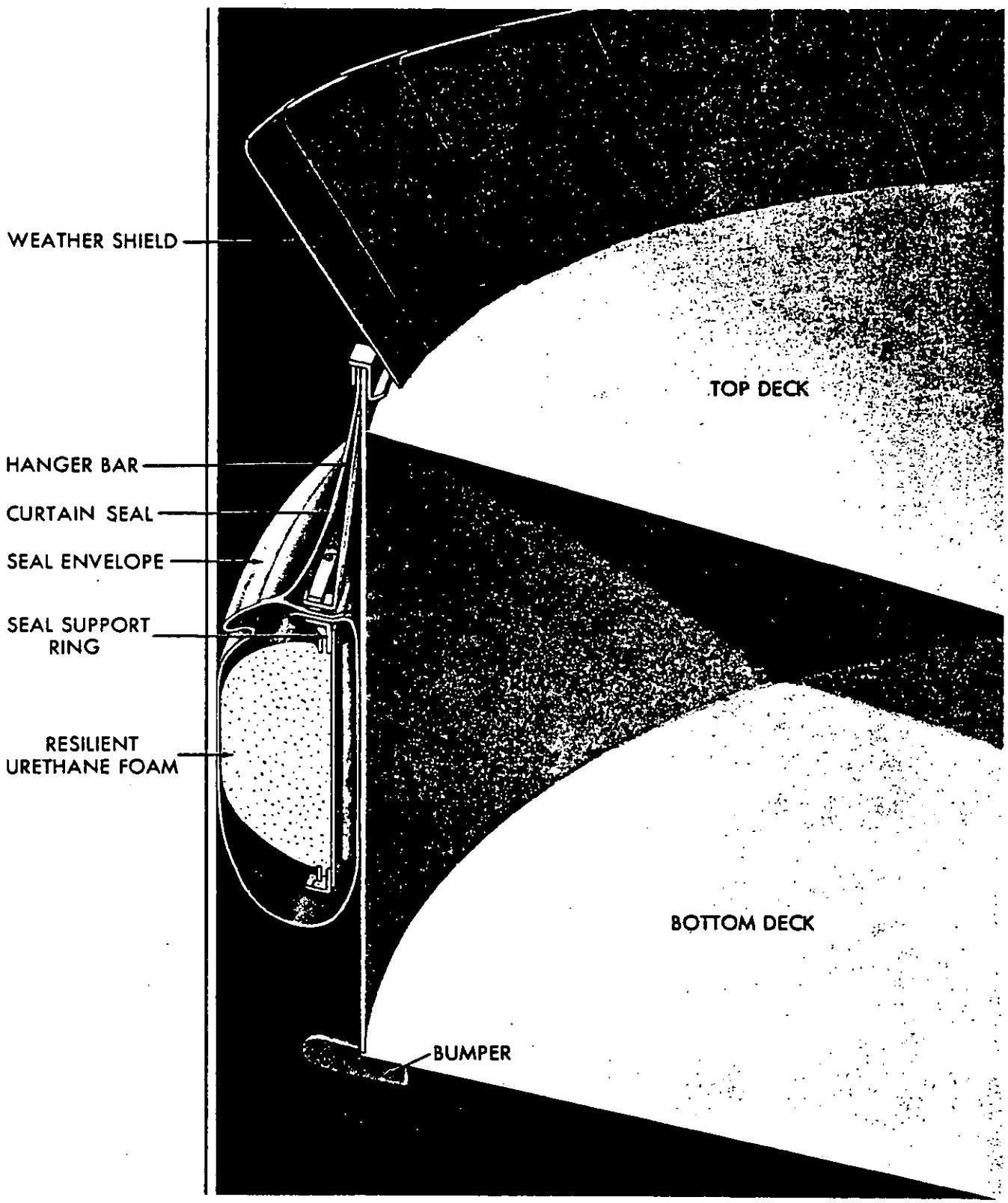

POM TUBESEAL SYSTEM

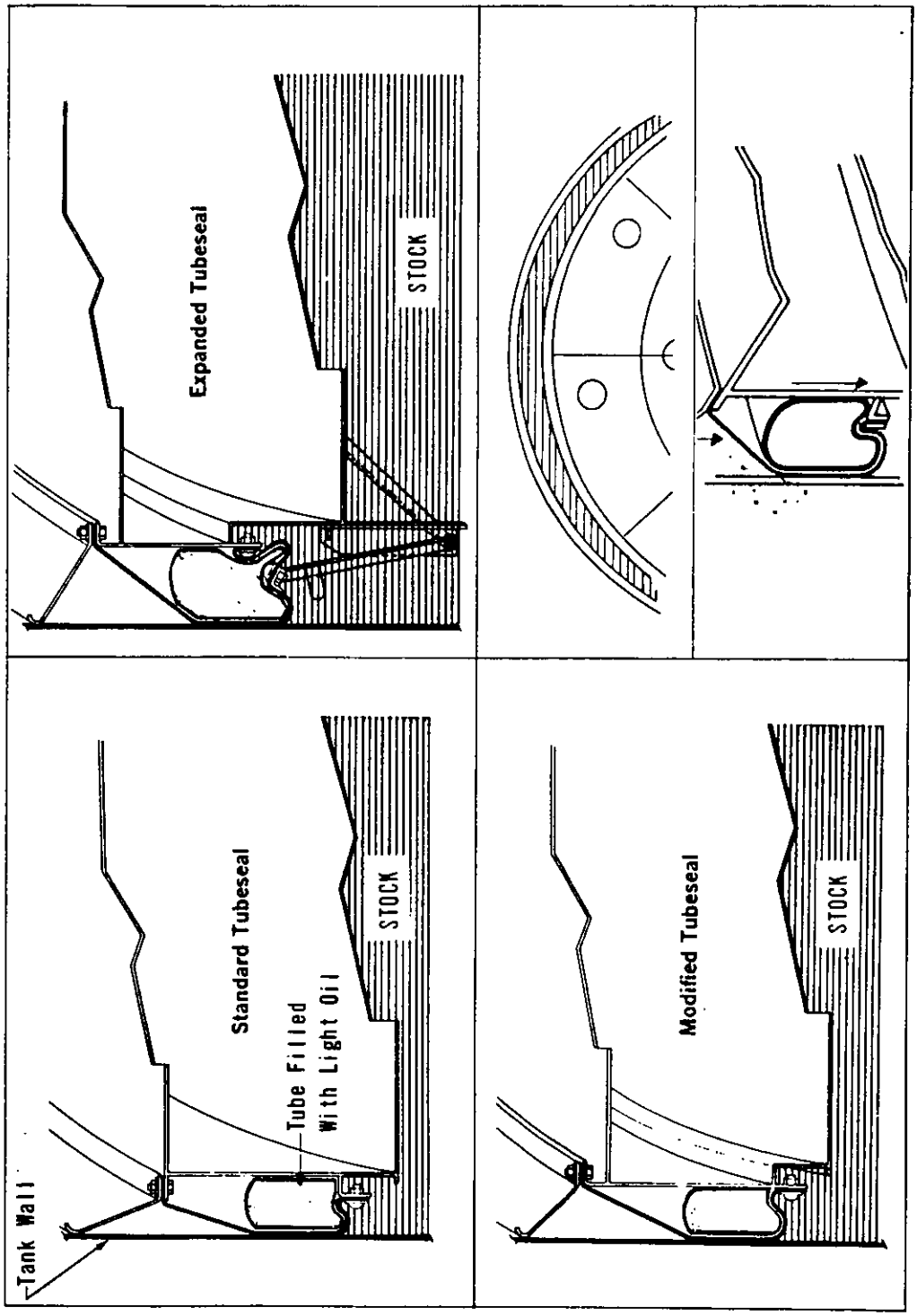

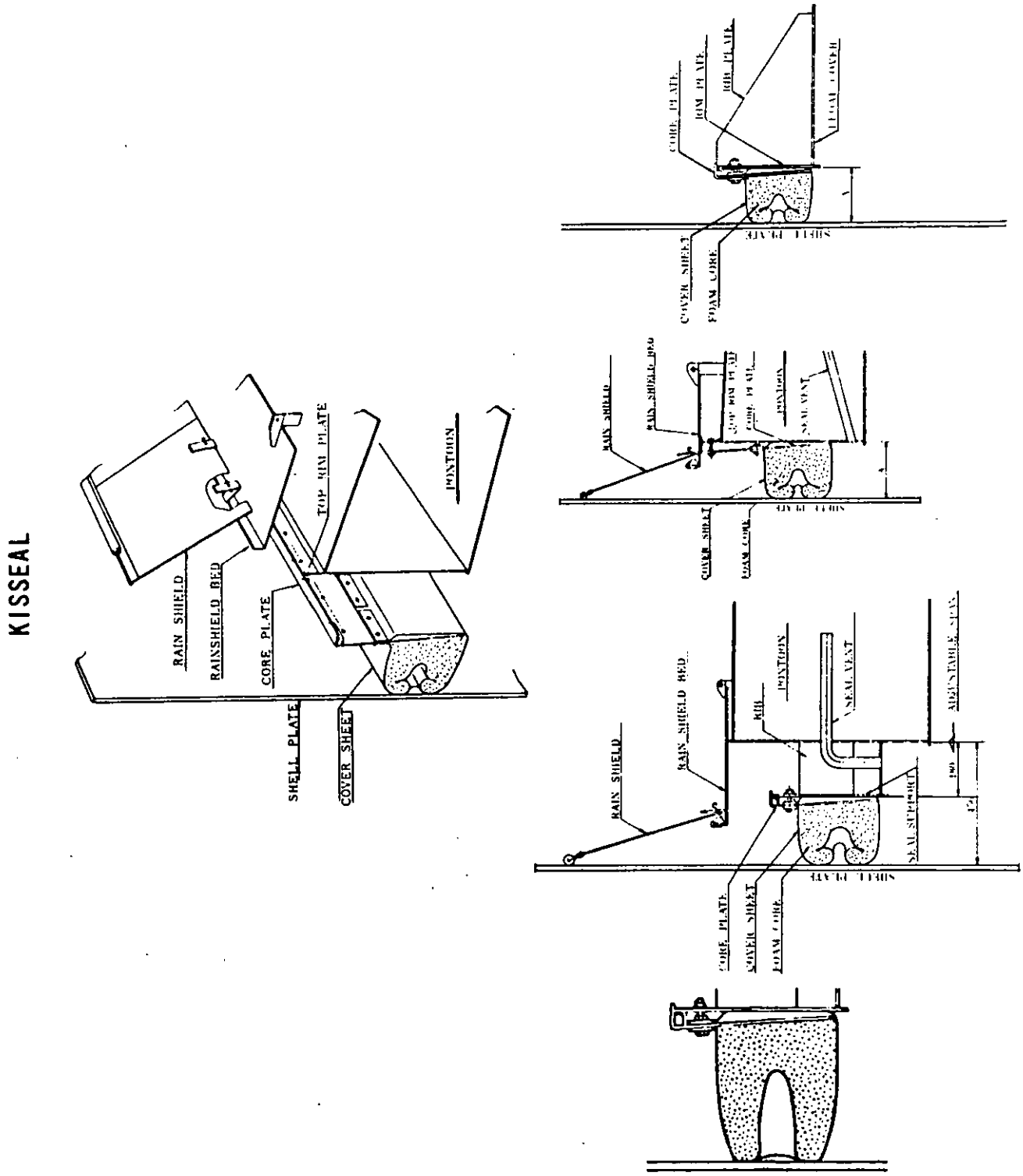
KISSEAL
RAIN SHIELD
RAINSHIELD BED
CORE PLATE
TOP RIM PLATE
PONTOON
SHELL PLATE
COVER SHEET
RAIN SHIELD
RAIN SHIELD BED
TOP RIM PLATE
CORE PLATE
PONTOON
SEAL VEAT
COVER SHEET
FOAM CORE
SHELL PLATE
CORE PLATE
RIM PLATE
RIM PLATE
FLOAT COVER
COVER SHEET
FOAM CORE
SHELL PLATE
RAIN SHIELD
RAIN SHIELD BED
RIM
PONTOON
SEAL VEAT
ADJUSTABLE STAY
SEAL SUPPORT
CORE PLATE
COVER SHEET
FOAM CORE
SHELL PLATE

retention of elasticity. However, inspection of ten tanks in the Orient by company personnel indicated that the seal did not meet the California Air Resources Board criterion of no gaps greater than one-eighth inch on eight of the 10 tanks examined. Installation cost of the seal in tanks in the United States is expected to be two to three times that of domestic tube seals.

The ThetaChron Division of Joseph Weissenbach and Associates has described a system for modifying a floating-roof tank to eliminate vapor losses. The tank is fitted with a fabric top designed to withstand wind forces that might otherwise blow it off. The floating-roof is fitted with an elastomeric diaphragm skirt which essentially replaces the tank wall (Figure VII-5). The space between the outside of the impervious skirt and the tank shell is filled with ethylene glycol. No commercial tank of this design has yet been built.

Secondary Seals

In order to prevent contamination of product by rain and dust smaller secondary seals have been developed.

Wiper-type. The simplest type of secondary seal is the cloth wiper attached to the top of the primary seal or the top of the floating-roof rim and extending to the tank wall to wipe off adhering liquid. A diagram of a wiper with three pieces of fabric is shown in Figure VII-6.

Other types of wiper seals being tested in Southern California are:

Ultraflote. The ultraflote wipe (Figure VII-7) has been used for some time along with internal floating-roofs (used in covered tanks to reduce breathing losses). It is made of a specially formulated polyvinyl chloride sheet. The end bolted to the bracket extending from the primary shoe is built up from the inside with a foam material. The wiper is non-abrasive and works on gunnited surfaces. It is not recommended on riveted tanks.

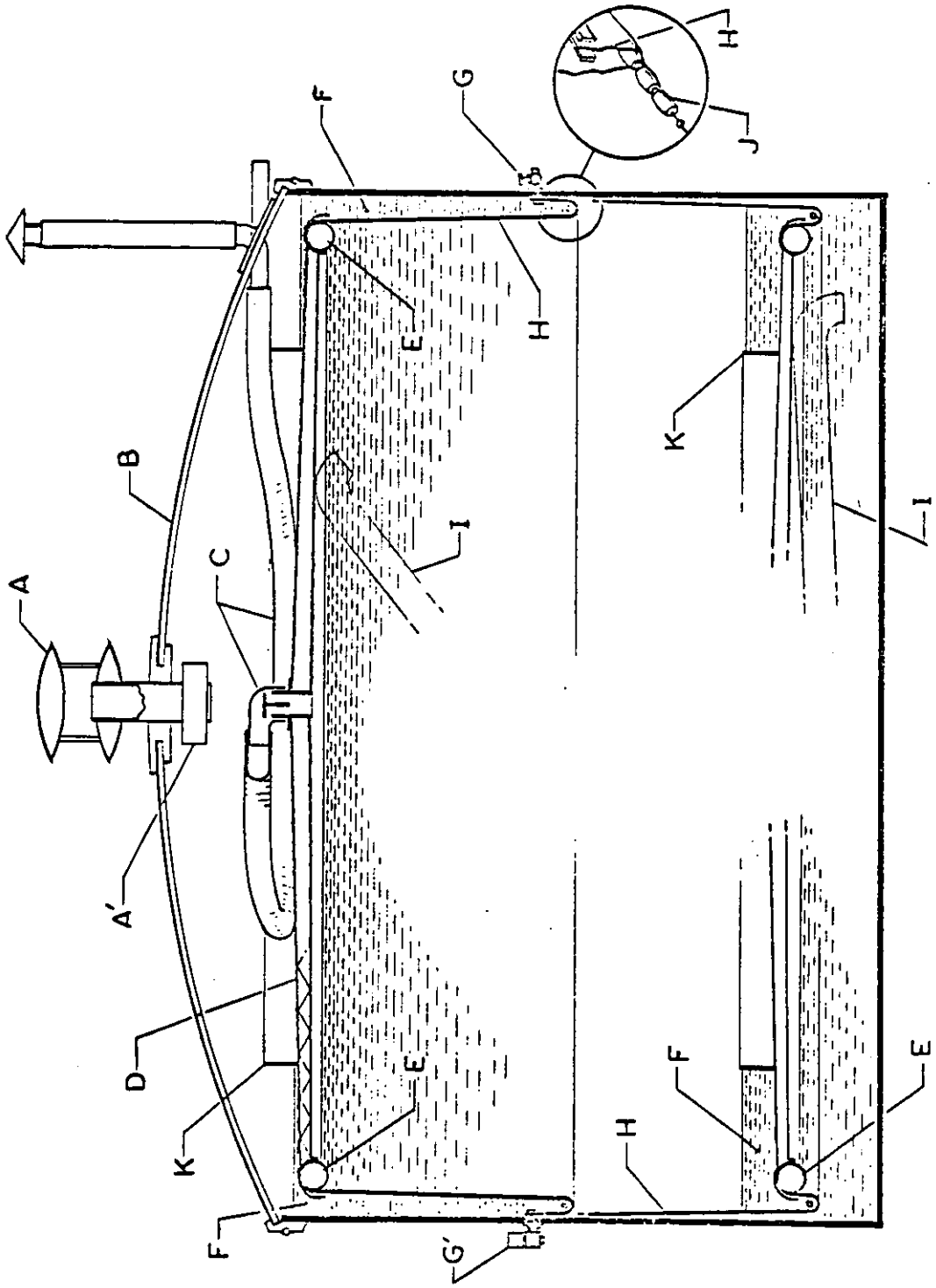

THETACHRON TANK

SECONDARY WIPER SEAL

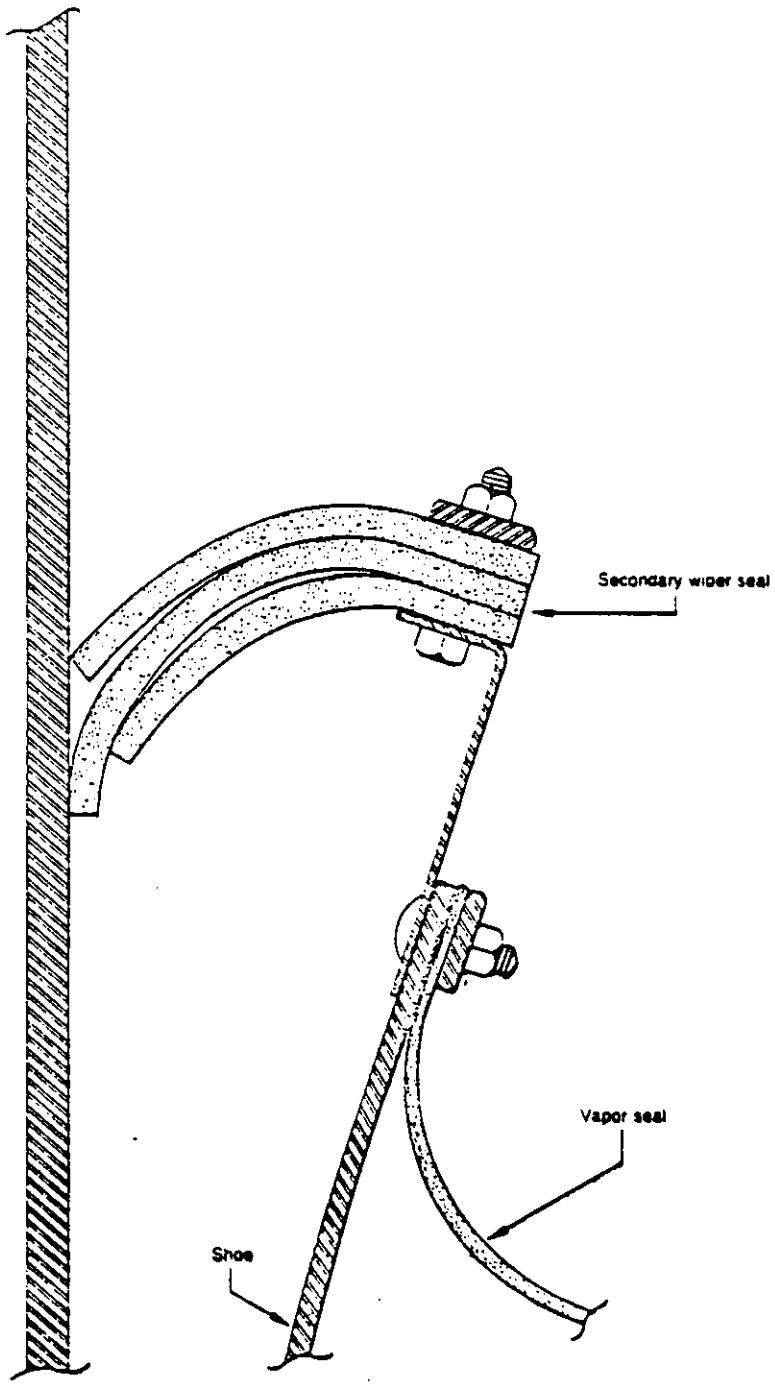

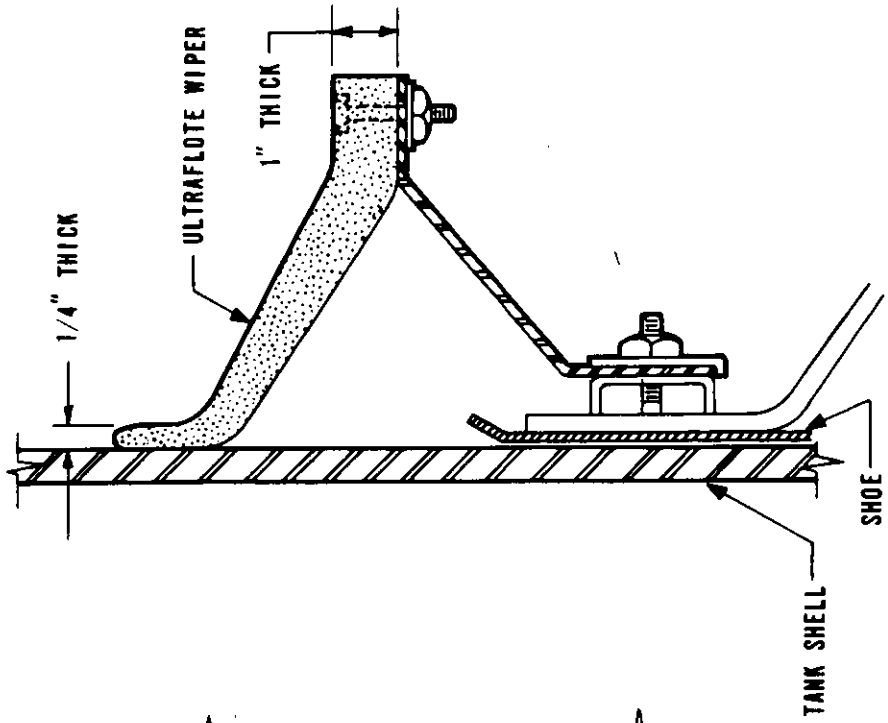

SIDE ELEVATION

ULTRAFLOTE WIPER

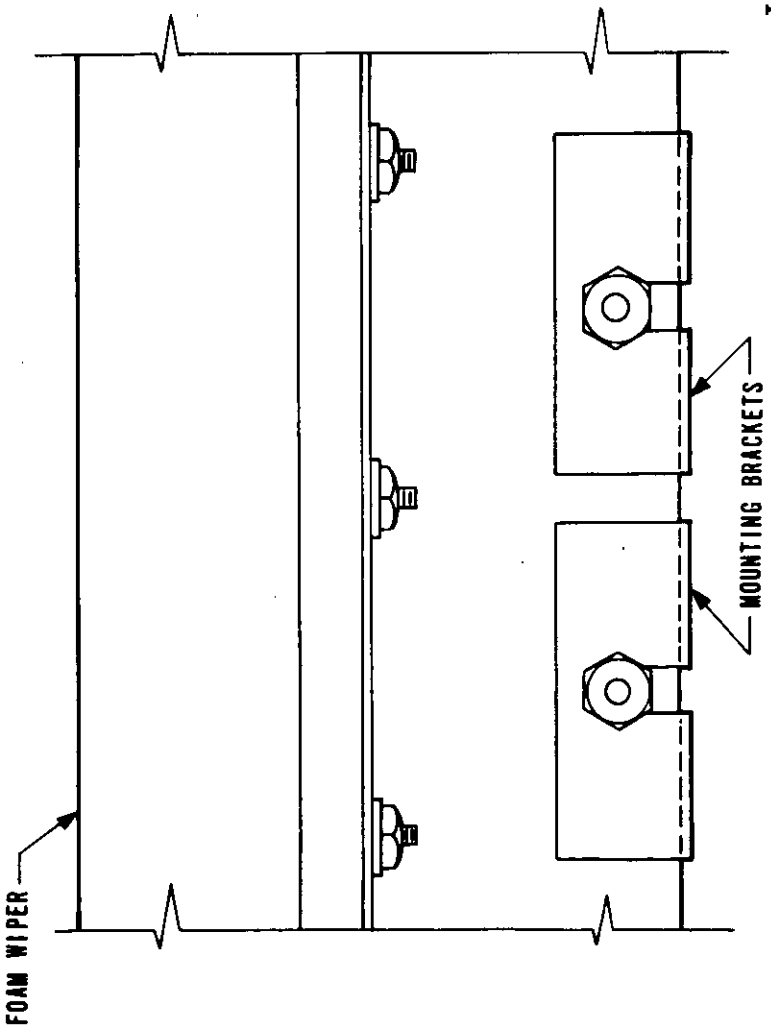

FRONT ELEVATION

Mini-Bag. There are several types of mini-bag seals. All are small versions of primary foam tube seals. They may be attached to the top of the mechanical shoe or to the roof. Foam logs are 3 to 4 inches in diameter. Examples are shown in Figures VII-8, 9, and 10.

Trico Wiper. This is a flexible wedge wiper attached to a bracket bolted on the primary shoe and impinging almost perpendicularly on the wall (Figure VII-11).

Maloney Seal. The Maloney seal is a flexible wiper held against the tank wall by means of a spring. Therefore, it exerts considerable pressure. A diagram of the Maloney seal is shown in Figure VII-12. The seal will maintain contact with the tank wall, even when the shoe is 2 1/2 inches from the wall.

Seal and Tank Accessories

When a welded tank is new and in good condition, properly installed shoe seals show a good fit and few if any gaps. In time, however, the mechanism forcing the seal against the tank wall may deteriorate due to corrosion and build-up of solids allowing the shoe to back away from the tank wall. To correct this problem, some users install external springs on the rim of the roof to help the top of the shoe to stay in contact with the tank wall (Figure VII-13). Too much pressure, of course, may destroy any coating on the inside wall.

No practical amount of pressure on a metallic shoe will close gaps caused by rivet heads in riveted tanks. Accordingly, attempts have been made to smooth the tank wall around rivet heads and butt straps by filling in the spaces between the heads and eliminating abrupt changes in the surface of the tank wall. Among fillers that have been used are gunnite, epoxy resins, and glass fiber resin mixtures. All have their limitations and problems.

Weather guards and weather shields are often installed over primary shoe and tube seals. These thin metal plates which are pivoted from the roof protect any liquid that may be exposed by large gaps from UV light and wind currents but do little to limit gap size. At times,

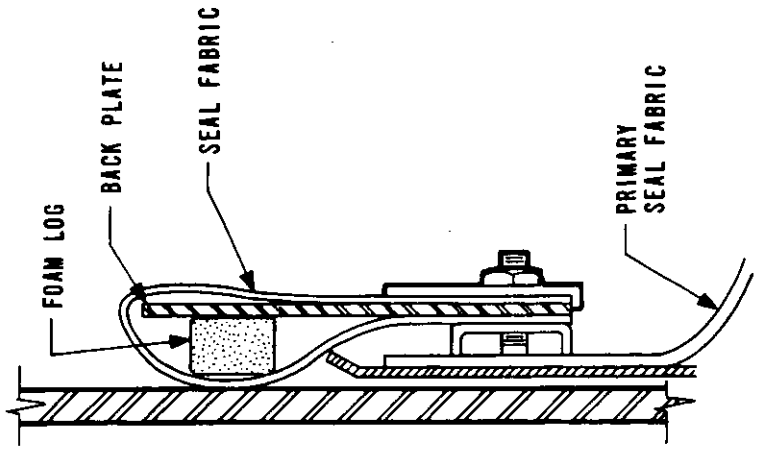

SIDE ELEVATION

PACIFIC ERECTORS MINI BAG

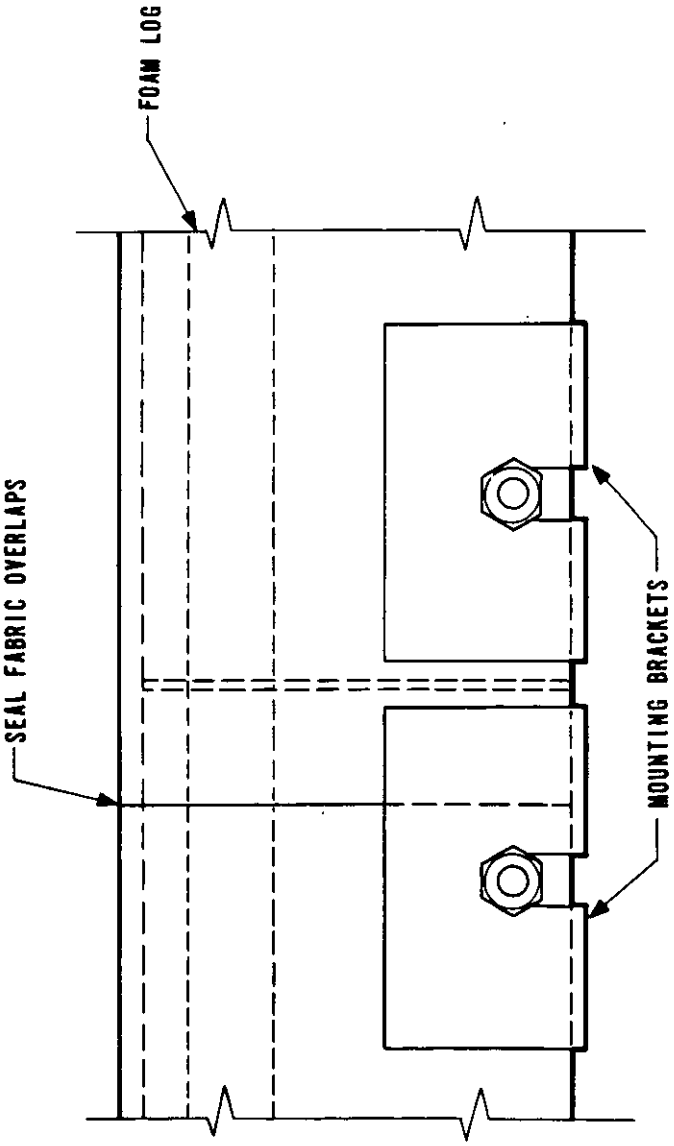

FRONT ELEVATION

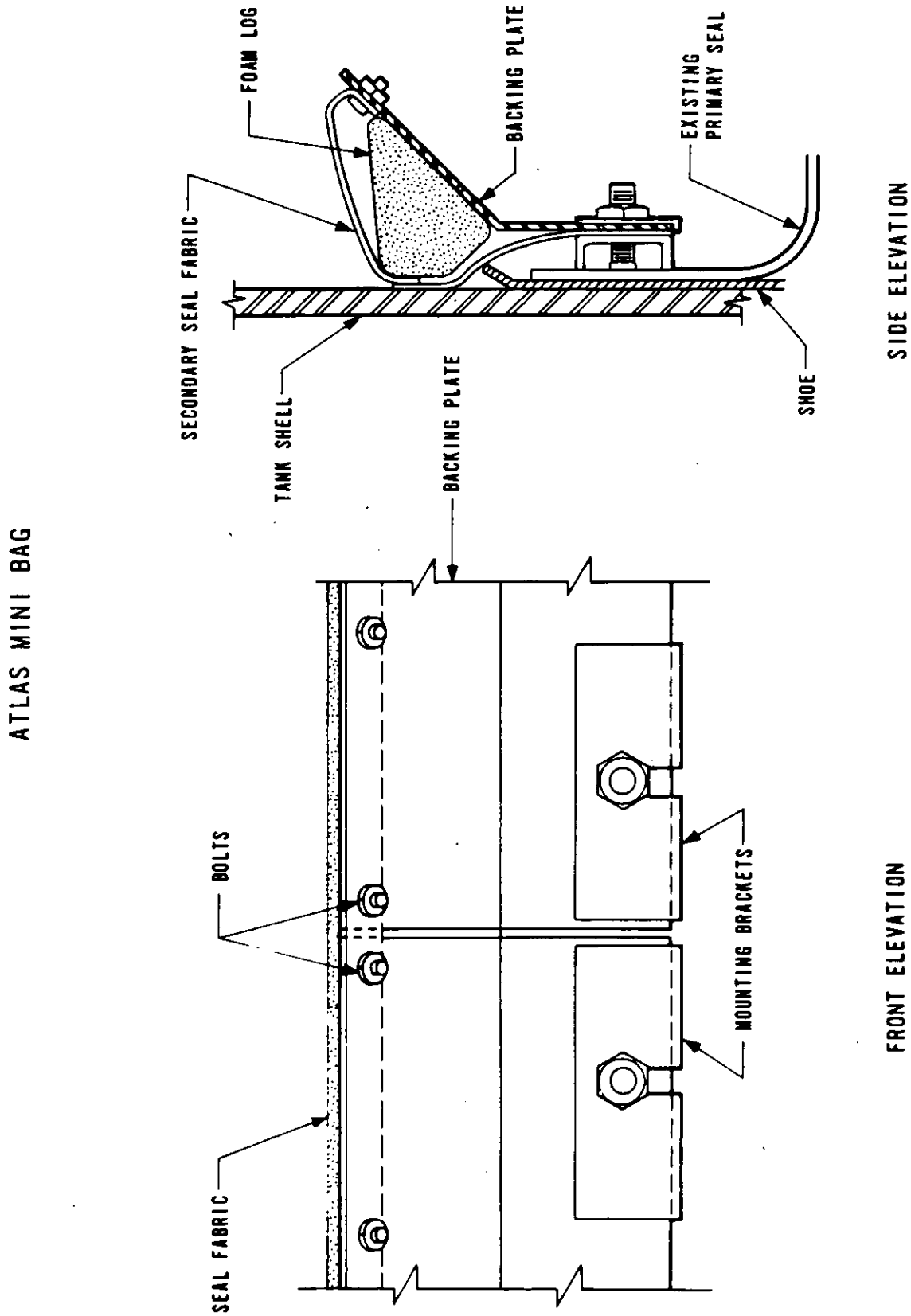
ATLAS MINI BAG
FOAM LOG
BACKING PLATE
EXISTING PRIMARY SEAL
SECONDARY SEAL FABRIC
TANK SHELL
SHOE
SIDE ELEVATION
BACKING PLATE
BOLTS
MOUNTING BRACKETS
SEAL FABRIC
FRONT ELEVATION

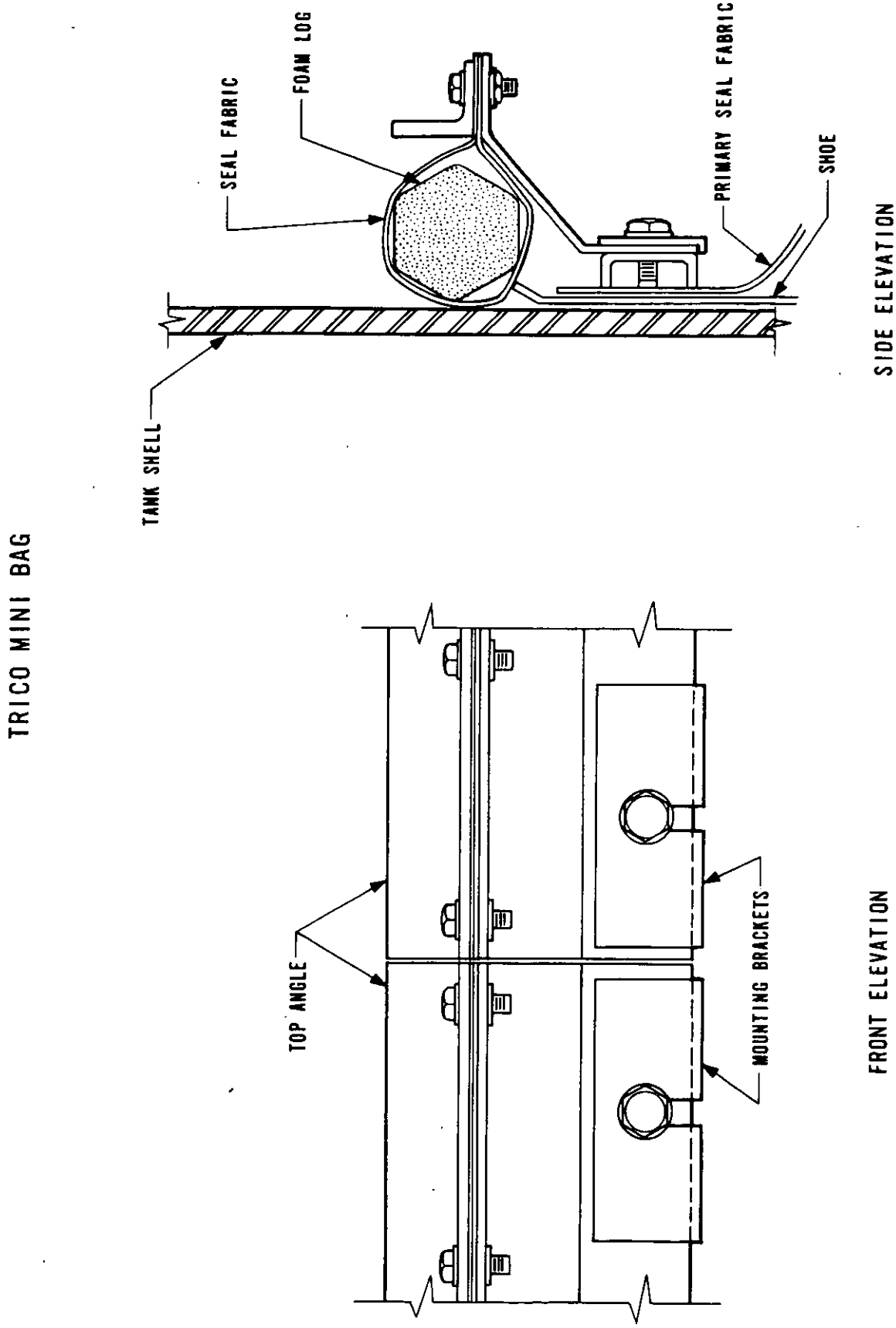
TRICO MINI BAG
TANK SHELL
SEAL FABRIC
FOAM LOG
PRIMARY SEAL FABRIC
SHOE
SIDE ELEVATION
TOP ANGLE
MOUNTING BRACKETS
FRONT ELEVATION

FIGURE VII-11

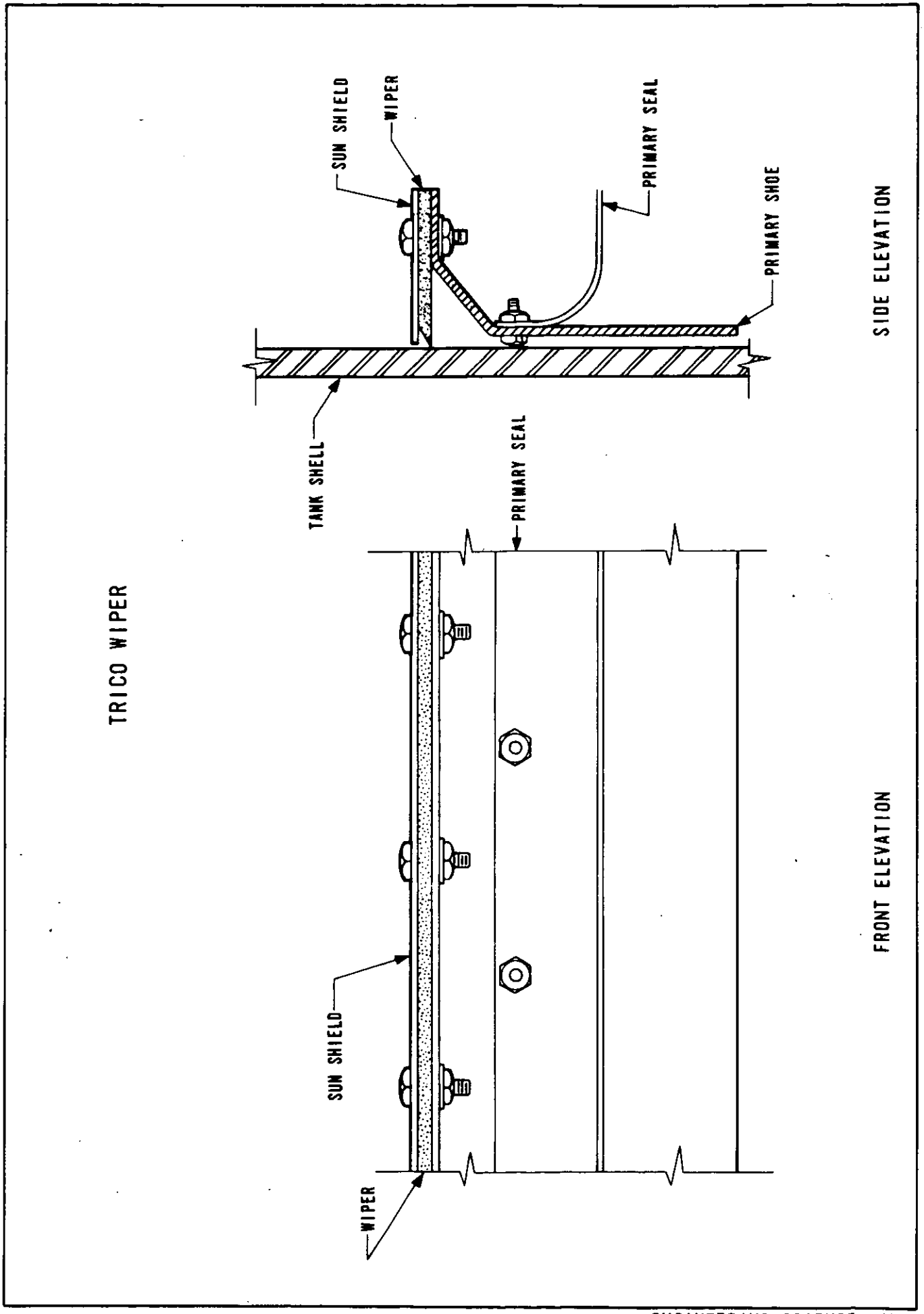

ENGINEERING-SCIENCE, INC.

MALONEY SECONDARY TANK SEAL

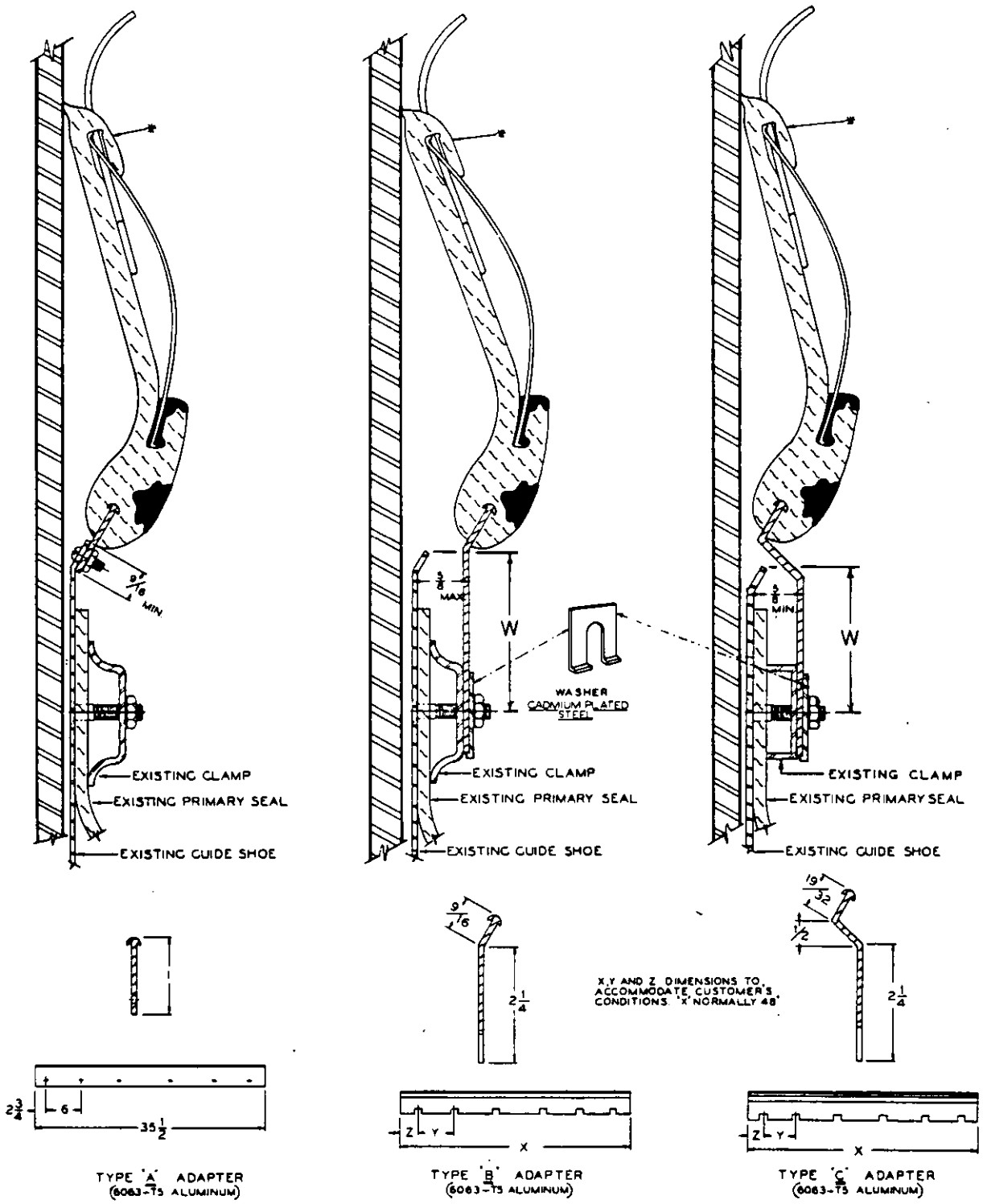

SPRING ASSISTED MECHANISM

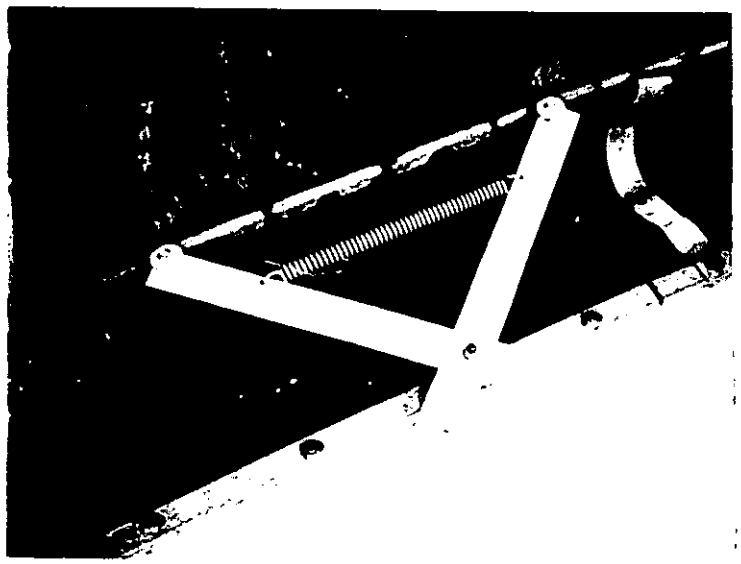

they have been considered by some as secondary seals, but their effectiveness in reducing gap size is poor.

SURVEY OF INSTALLED SEALS WITH RESPECT TO GAP SIZE

Test data on more than 200 tanks were obtained from various oil companies in the South Coast Air Basin (Atlantic-Richfield, Douglas, Gulf, Mobil, Shell, Standard, Texaco, and Union). Selection of tanks and seals to be tested, methods of inspection, and of reporting results were made by each company individually. Inspection frequency varied from only one roof level up to more than 20 different levels per tank. Some inspectors reported gap measurements in ranges of 1/8" to less than 1/4", 1/4" to 3/8", 3/8" to 1/2", 1/2" and above, and maximum gap size. All companies reported data in such form that it could be arranged to show gap measurements in two categories: (1) 1/8" or more but less than 1/2", and (2) 1/2" or more. A summary of the data is shown in Table VII-1 (for welded tanks) and Table VII-2 (for riveted tanks). Only the average of total gap lengths (average for the numbers of roof levels where inspections were made) is reported in the Tables in order to avoid over-complicating them. Observations concerning specific inspections are also shown. Asterisks beside tank numbers in the Tables refer to those inspections where observations are particularly pertinent.

The individual sheets in Appendix F were derived from the inspection reports submitted by the various companies, and put into a uniform format for clarity. Where inspections were made only at one level, the individual sheet was not included, but the results are shown in Tables VII-1 and VII-2. Some of the reports include inspections made by ARB and APCD personnel; others do not. The inspections made by the agencies are not identified in this report.

Tank identification numbers are meaningful only to the authors of this report. They were so arranged and selected so that anonymity of the data was preserved.

Examination of Table VII-1 (for welded tanks) reveals that only one tank with a shoe seal and no secondary seal would meet a criterion

TABLE VII-1

PERFORMANCE OF SEALS ON FLOATING-ROOF TANKS

Welded Tanks

Tank Iden.	Service	Diam. (feet)	Primary Seal	Secondary Seal	Levels Tested	Feet of Gap (Av. per Lev.) 1/8"-1/2"	1/2" & Over
B-1	C.O.	160	Shoe	Looped Fabric	19	3.1	0
B-2	C.O.	140	Foam Log	None	16	24.5	24.4
R-1*	Gas	60	Tube	None	9	4.1	4.1
R-2	Av. Gas	60	Tube	None	9	3.2	.56
R-3	Av. Gas	60	Shoe	Mini-Tube	7	5.7	0
R-4	Av. Gas	60	Tube	None	7	1.0	0
R-5*	Av. Gas	60	Shoe	Mini-Bag	12	0.1	0
R-6	C_5-C_6	100	Shoe	Maloney	10	0	0
R-7	Reformate	150	Tube	None	13	3.5	0.4
R-8	Reformate	100	Shoe	None	4	41.3	0.25
R-9	Gas	138	Tube	None	13	0.2	0
R-10	C.O.	100	Tube	None	3	4.7	0
R-11	Gas	119	Tube	None	8	0.6	0.03
R-12	C.O.	100	Shoe	None	12	62.0	8.0
R-13	EFU	150	Tube	None	14	0	0
R-14	Pentane	67	Shoe	Maloney	4	2	0
R-15	Hexane	90	Shoe	Maloney	3	0	0
R-16	C.O.	155	Shoe	None	6	62.3	9.3
R-17	Gas	110	Tube	None	7	0.5	0.01
R-18*	Gas	110	Shoe	Maloney	5	17.2	0.6
R-19	Gas	110	Shoe	Mini-Bag	4	1.3	1.0
R-20	C.O.	220	Shoe	None	15	72.6	13.3
L-1	C.O.	227	Tube	None	21	64.0	18.7
L-2	C.O.	227	Tube	None	24	76.7	23.5
L-3	C.O.	242	Tube	None	3	0	0
L-4	C.O.	230	Shoe	None	15	93.7	13.3
L-5	C.O.	230	Shoe	None	14	115.3	14.9
L-6	C.O.	230	Shoe	None	17	228.9	9.2
L-7	C.O.	260	Tube	None	4	0.03	0
L-8	C.O.	260	Tube	None	4	4	0
L-9	C.O.	200	Tube	None	7	15.6	2.0
M-1	Gas	54.5	Tube	Weather-Guard	4	13.1	0
M-2	Gas	54.5	Shoe	None	4	0.4	0.5
M-3	Gas	54.5	Tube	Weather-Guard	3	1	3.3

TABLE VII-1

PERFORMANCE OF SEALS ON FLOATING-ROOF TANKS (Cont.)

Welded Tanks

Tank Ident.	Service	Diam. (feet)	Primary Seal	Secondary Seal	Levels Tested	Feet of Gap (Av. per Lev.) 1/8"-1/2"	1/2" & Over
M-4	Gas	54.5	Tube	Weather-Guard	4	5.8	0.4
M-5	Diesel	21.5	Shoe	None	3	7.5	0
M-6	C.O.	60	Shoe	Wiper	2	34	2.9
M-7	C.O.	90	Shoe	Wiper	2	162	71
M-8	C.O.	90	Shoe	Wiper	2	142	55.9
H-1	Gas	120	Tube	None	8	0.34	0.3
H-2	Gas	150	Tube	None	6	0	0
H-3	Recov. Oil	80	Shoe	None	1	7.2	0
H-4	Gas	120	Tube	None	7	2.2	0
H-5*	Gas	120	Shoe	None	2	.13	0.04
H-5	Gas	120	Tube	None	2	0	0.08
H-6	Gas	117	Tube	None	7	10.1	3.4
H-7(a)	Gas	117	Tube	None	3	0	0
H-7(b)	Gas	117	Shoe	None	3	3.3	0.9
H-8	Gas	117	Shoe	None	2	11.4	5.4
H-8(b)	Gas	117	Tube	None	6	0	0
H-9	Gas	120	Shoe	None	2	3.8	0
H-10	Gas	120	Tube	None	5	0	0.07
H-11	Gas	120	Shoe	None	9	8.3	0
H-12	Gas	120	Shoe	None	2	15.3	0
H-13(R)*	Gas	117	Tube	None	4	13.2	11.1
H-13(W)*	Gas	117	Tube	None	4	0	0
P-1	C.O.	117	Shoe	None	3	10.8	31
P-2	Gas	120	Shoe	None	3	14.8	0
P-3	Gas	122	Tube	None	3	0.9	0.01
P-4	Jet A	122	Tube	None	3	2.4	0.001
P-5	Gas	96	Shoe	None	3	18.4	7.7
P-7	Av. Gas	60	Shoe	None	3	11.8	0.47
P-8	Rec. Gas	48	Shoe	None	3	14.1	0.7
P-9	Gas	120	Shoe	None	2	36.2	0.1
P-10	Gas	30	Tube	None	4	.08	0.2
P-11	Sour Water	75	Shoe	None	3	10.1	0.9
P-12	C.O.	195	Tube	None	5	0.4	0
P-13	C.O.	160	Tube	None	4	0.3	0
P-14*	Rec. Oil	45	Tube	None	3	89	3.7
P-15	Rec. Oil	25	Tube	None	3	5	0.4+
P-16	Gas Oil	80	Tube	None	3	0.5	0+
P-17	Gas	100	Shoe	None	3	42.0	7.5
P-18	Alkylate	36	Tube	None	3	4.7	0.8

TABLE VII-1

PERFORMANCE OF SEALS ON FLOATING-ROOF TANKS (Cont.)

Welded Tanks

Tank Ident.	Service	Diam. (feet)	Primary Seal	Secondary Seal	Levels Tested	Feet of Gap (Av. per Lev.) 1/8"-1/2"	1/2" & Over
P-19	Alkylate	100	Shoe	None	4	11	0.2
C-1	Av. Gas	95	Shoe	Ultra-Type (Ex)	3	0	0
C-2	Gas	140	Shoe	Blade (Ex)	1	5.6	6.7
C-3	Gas	140	Shoe	Foam Seal	4	0.9	0
C-4	Gas	140	Shoe	Ultra-Type (Ex)	3	3	0
C-5	Gas	30	Tube	None	1	0	0
C-6	Gas	86	Tube	None	2	0.05	3.4
C-7	Gas	78	Tube	None	3	2.7	0
C-8	C.O.	78	Shoe	None	1	3.3	0.2
C-9	Gas	94	Shoe	None	1	12.1	0
C-10	Jet	120	Tube	None	1	0	0
C-11	Naphtha	110	Shoe	None	1	27.2	0
C-12	Sour Water	140	Shoe	Wiper	1	2.2	33
C-13	Gas	140	Shoe	Wiper	1	1.5	0
C-14	C.O.	140	Shoe	None	1	2.1	0.6
T-1	Naphtha	90	Shoe	None	1	59.4	46.8
T-2	Naphtha	90	Tube	None	1	0	0
T-3	Naphtha	120	Shoe	None	1	53.1	8.3
T-4	Gas	120	Tube	Weather Shield	1	55.8	77.4
T-5	Gas	120	Tube	Weather Shield	2	17.2	0.7
T-6	Naphtha	120	Shoe	Weather Shield	2	0	0
T-7	Gas	120	Tube	Weather Shield	3	8.8	0.6
T-8	Alkylete	120	Tube	Weather Shield	1	4.6	0
T-9	Reformer Feed	150	Shoe	None	1	94	12
T-10	Reformate	150	Shoe	None	1	102.9	4.6
T-11	JP-4	150	Shoe	None	1	56.9	0.5
T-12	Reformate	150	Tube	None	1	0	0
T-13(a)	Gas	120	Tube	None	2	7.0	6.2
T-13(b)	Gas	120	Tube	Maloney	All	0.1	0
T-14	Resid. Stk.	120	Shoe	None	1	5.7	0
T-15	Recov. oil	90	Shoe	None	1	0	0
T-16*	Gas	120	Shoe	None	3	3.4	0.07

TABLE VII-1

PERFORMANCE OF SEALS ON FLOATING-ROOF TANKS (Cont.)

Welded Tanks							
Tank Iden.	Service	Diam. (feet)	Primary Seal	Secondary Seal	Levels Tested	Feet of Gap (Av. per Lev.) 1/8"-1/2"	1/2" & Over
T-17	Gas	120	Tube	None	1	2.2	0
T-18	Gas	120	Shoe	Weather Shield	1	1.4	0
T-19	Recov. Oil	52	Shoe	Wiper	1	1.7	0.2
T-20	Av. Gas	60	Tube	None	3	7.1	2.5
T-21	Av. Gas	60	Tube	None	2	9	0
T-22	Gas	120	Tube	None	3	1.2	0
T-23	Recov. Oil	60	Tube	None	3	1.4	0
T-24	Gas	90	Tube	None	2	5.3	17.2
T-25	Gas	70	Shoe	None	2	28	1.3
T-26	Gas	150	Tube	Weather Shield	4	3.5	0
T-27	Reformate	120	Tube	Weather Shield	1	0	0
Y-1*	JP-4	60	Foam Log	None	7	4.1	30.4
Y-2*	JP-4	60	Foam Log	None	2	0	0
Y-3	JP-4	90	Foam Log	None	5	0	2.9
Y-4*	Gas Oil	86	Foam Log	None	6	12.3	56.8
Y-5	C.O.	150	Liquid-Filled Fabric	None	4	0	8

TABLE VII-2

PERFORMANCE OF SEALS ON FLOATING-ROOF TANKS

Riveted Tanks

Tank Iden.	Service	Diam. (Feet)	Primary Seal	Secondary Seal	Levels Tested	Feet of Gap (Av. per Lev.) 1/8"- 1/2"	1/2" & Over
A-1	C.O.	135	Shoe	Wiper	18	23.55	8.1
K-1	Benzene	36	Tube	None	3	0.75	0
K-2	Naphtha	60	Shoe	Mini-Bag	16	0.24	0
K-3	Recov. Oil	115	Shoe	None	4	47.5	7.5
K-4	Gasoline	115	Shoe	Mini-Bag	5	5.1	0
K-5	Benz-Tol	115	Shoe	Mini-Bag	3	4.2	2.7
K-6*	Benz-Tol	115	Shoe	Mini-Bag	4	29.3	3.5
K-7*	Benz-Tol	115	Shoe	Mini-Bag	2	19.0	3.3
K-8	Alkylate	120	Shoe	Mini-Bag	8	0	0
K-9	Gasoline	115	Shoe	None	2	15.5	8.0
K-10	Reformate	115	Shoe	Mini-Bag	5	12.3	0
K-11	C.O.	115	Shoe	None	3	146.7	4.7
F-1	Gasoline	144	Shoe	None	4	86.7	147.9
F-2	Gasoline	144	Shoe	None	4	31.2	30.2
F-3	Gasoline	120	Shoe	Wiper	4	130	45.4
F-4	Gasoline	120	Shoe	Wiper	4	148.9	27.1
F-5	Gasoline	120	Shoe	Wiper	4	105.8	52.9
F-6	Gasoline	120	Shoe	Wiper	4	89.8	14
F-7	Varied	120	Shoe	Wiper	3	60.8	17.1
F-8	Gasoline	120	Shoe	Wiper	4	75.6	32.4
F-9	Gasoline	120	Shoe	Wiper	4	70.3	45.6
F-9.1	Gasoline	120	Shoe	Wiper	4	45.1	65.8
F-10	C.O.	144	Shoe	None	3	201.8	58.9
F-11	C.O.	144	Shoe	None	3	138.7	38.7
F-12	C.O.	144	Shoe	None	3	200.2	48.0
F-13	C.O.	144	Shoe	None	3	73.2	198.3
F-14	C.O.	144	Shoe	None	3	188.4	43.6
F-15	C.O.	144	Shoe	None	3	106.7	56.4
F-16	C.O.	168	Shoe	None	3	115.8	242.2
F-17	C.O.	168	Shoe	None	3	91.9	56.7
F-18	C.O.	168	Shoe	None	3	136.4	50.7
F-19	C.O.	168	Shoe	None	2	90.7	69.0
F-20	C.O.	168	Shoe	None	2	115.1	67.6
F-21	C.O.	168	Shoe	None	2	173.8	94.8
S-1*	Gasoline	50	Shoe	Foam	4	4.7	3.9
S-2	Rec. Oil	36	Shoe	None	3	11.7	14.8
S-3	C.O.	117	Shoe	None	3	158.0	0
S-4	C.O.	117	Shoe	None	3	67.3	Unknown
S-5	Gasoline	117	Shoe	None	4	85.0	3.9
S-6	Gasoline	117	Shoe	None	2	61.5	0

TABLE VII-2

PERFORMANCE OF SEALS ON FLOATING-ROOF TANKS (Cont.)

Riveted Tanks

Tank Iden.	Service	Diam. (Feet)	Primary Seal	Secondary Seal	Levels Tested	Feet of Gap (Av. per Lev.) 1/8"- 1/2"	1/2" & Over
S-7	Gasoline	117	Shoe	None	3	64.8	1.2
S-8	Rec. Oil	117	Shoe	None	2	27	0
S-9	Gasoline	117	Shoe	None	2	11.8	0
S-10	Gasoline	117	Shoe	None	2	10.5	1.9
S-11	Gasoline	117	Shoe	None	2	27	6.5
S-12*	Av. Gas	79	Shoe	Foam Tube	5	3.1	0.8
S-13	Av. Gas	60	Tube	None	4	3.3	10
S-14*	Av. Gas	35	Shoe	Foam Tube	4	2	17.5
S-15	Gasoline	117	Shoe	None	3	50	4.3
S-16	Gasoline	117	Shoe	None	4	79	9
S-17	Gasoline	117	Shoe	Loop	4	20	4.5
S-18	Rec. Oil	45	Shoe	None	3	21	0.7
X-1	Gasoline	144	Shoe	Finger(Ex.)	1	38.2	0
X-2	Gasoline	144	Shoe	Multi-Finger (Ex.)	2	4	5.8
X-3	Jet	60	Shoe	None	1	39.6	52
X-4	Av. Gas	60	Shoe	Wiper	1	44.4	7.2
X-5	Av. Gas	60	Shoe	None	1	46	0
X-6	Av. Gas	60	Shoe	Wiper	1	13.5	0
X-7	Av. Gas	60	Shoe	Wiper	1	7.2	0.3
X-8	Jet	117	Shoe	Wiper	1	0	2
X-9	Jet	117	Shoe	Wiper	1	0	0
X-10	Gasoline	120	Shoe	Wiper	1	38.2	0
X-11	Gasoline	120	Shoe	Wiper	1	97.9	0
X-12	Gasoline	144	Shoe	Wiper	1	25.5	0
X-13	Gasoline	144	Shoe	None	1	3	248
X-14	C.O.	144	Shoe	None	1	87.1	0.2
X-15	C.O.	144	Shoe	None	1	15.4	0.2
X-16	C.O.	144	Shoe	None	1	21	0
X-17	C.O.	144	Shoe	None	1	5.5	0.2
X-18	C.O.	144	Shoe	None	1	0	0
X-19	C.O.	144	Shoe	None	1	5.5	4
V-1	Recov. Oil	96	Shoe	None	1	86.5	14.8
V-2	C.O.	117	Shoe	None	1	159	12.2
V-3	C.O.	117	Shoe	None	1	2	4.2
V-4	C.O.	117	Shoe	Wiper	1	54.2	1.7
V-5	C.O.	117	Shoe	None	2	33.5	20.3
V-6	Gasoline	117	Shoe	Wiper	2	31	0.6
V-7*	Resid.	120	Shoe	With/W.O. Mini-Tube	2	123.7 1	59.6 0
V-8	C.O.	144	Shoe	None	1	28.9	0.8

TABLE VII-2

PERFORMANCE OF SEALS ON FLOATING-ROOF TANKS (Cont.)

Riveted Tanks

Tank Iden.	Service	Diam. (feet)	Primary Seal	Secondary Seal	Levels Tested	Feet of Gap (Av. per Lev.) 1/8"-1/2"	Feet of Gap (Av. per Lev.) 1/2" & Over
V-9*	C.O.	144	Shoe	With/W.O.	2	214.6	2.5
				Mini-Tube		63.4	51.7
V-10	C.O.	144	Shoe	None	1	167.7	0
V-11	C.O.	144	Shoe	None	1	140.4	3.9
V-12	Alkylate	120	Shoe	Wiper	2	37.7	2.1
V-13	Gasoline	27	Shoe	None	1	40.4	0.8
V-14	Gasoline	28	Shoe	Wiper	1	0.9	0
V-15	Gas Solv.	27	Shoe	None	1	49.0	4.2
V-16	Gas Solv.	27	Shoe	None	1	36.4	1.3
V-17	Gas Solv.	27	Shoe	Wiper	1	13.7	1.8
V-18	Gasoline	27	Tube	None	1	0	0
V-19	Additive	30	Shoe	Wiper	1	6.9	0
V-20	Gasoline	30	Shoe	None	1	64.3	0.4
V-21	Gasoline	30	Shoe	None	1	48.5	1.9
V-22	Gas Solv.	30	Shoe	Wiper	1	6.4	0
V-23	Gas Solv.	30	Shoe	Wiper	1	1.9	0

of "no gap greater than 1/8-in." This was Tank 15 and it had been inspected only at one roof level. After an external spring was attached to T-16, it met the criterion, but again, only a one-level inspection was made. Several other tanks came close, but even these had gaps in excess of 1/2-inch.

When tanks with primary shoe seals were provided with certain secondary seals, improvement was noted but the data are obviously limited. Secondary seals of fabric-protected foam brought the tanks with primary shoe seals into a low-gap regime. The Maloney secondary seal and the experimental ultra-type seal also showed promise. Ordinary wiper seals, however, did little good.

The primary tube seal performed much better in meeting the no-gap rule than the metallic shoe seals. For tanks in clean service provided with primary tube seals, the number and size of gaps found by inspection were much less than with shoe seals, although quite a few were in excess of 1/2-inch. Of the primary tube seals that failed badly, most were installed on crude oil tanks. Weatherguards or weathershields did not improve the performance of primary tube seals.

Examination of Table VII-2 (for riveted tanks) shows that only three of the tanks had primary foam-tube seals. All of the rest had primary metallic shoe seals. This reflects the low life expectancy of tube seals due to wear and tear of the fabric envelope as rust and other deposits build up around rivet heads, butt straps, and overlapping courses.

Only one riveted tank (K-8) showed no gaps in excess of 1/8-inch at any level tested. However, this tank is lined with gunnite and no rivets are protruding to create seal gaps; thus it effectively represents a surface area similar to that of a welded tank. Other riveted tanks fitted with primary shoe seals and mini-bag (small foam logs) secondary seals showed a minimization of gap size, but the gaps usually included some in excess of 1/2-inch. As was the case with welded tanks, the use of secondary wipe seals does not appear to add anything to gap minimization.

The three tanks with primary tube seals only were all small. Only one showed no gaps, and this was measured at one level only.

DISCUSSION OF RESULTS

This discussion of factors affecting seal performance is based partly on the test data presented in Tables VII-1 and VII-2, and partly on the experience of floating-roof tank manufacturers, erectors, and users. The discussion is directed solely to the minimization of seal gaps and carries no connotation as to hydrocarbon loss by evaporation.

The data listed in Tables VII-1 and VII-2 showed that in practice floating-roof tanks with metallic shoes as primary seals display gaps of various lengths along the tank circumference and up to several inches between the seal and the shell. The dimensions of these gaps are related to several real-world factors that should be understood to assess best available seal technology.

The number and size of the gaps depend on the symmetry and condition of the tank shell, the stability of the roof, and the condition of the metallic shoe and its operating mechanism, all of which affect the clearance between the seal and the shell. If each of these factors is essentially as designed, there should be no gap exceeding, perhaps, 1/8-inch.

Despite good design, there are a variety of conditions that may develop as field conditions vary and time passes. For instance, if the tank becomes out-of-round (e.g., tending toward egg-shape) even temporarily, or becomes bulged or dented, the shoe must have the capability of conforming to the new contour if larger gaps are to be avoided. Tank "out-of-roundness" may result from differential settling of the foundation or the ground under the foundation, from thermal stresses (differential heating by the sun), or from wind pressure. Bulges may result from thermal or physical stresses during erection. Tanks of large diameter are more prone to these variations than smaller tanks. Tanks up to 260 feet in diameter were investigated during the current study.

If the roof shifts to one side of the tank or another, the shoe seal must be capable of accommodating the large gap that forms on one side of the tank, and must do this fairly uniformly. Roof shifting often results from twisted roof poles or roof drains with stack swivel joints that tend to pull the roof off-center, particularly at lower levels. Even if the tank is perfectly round and the roof doesn't shift, any imperfection in the tank wall such as rivet heads, butt-straps, beaded welds, guide bars, or a build-up of corrosion products, carbon, or heavy wax will hold the shoe sufficiently away from the wall to produce gaps. Bulges or dents in addition to surface imperfections accentuate gap development.

With all of the foregoing factors tending toward changing the condition and even the dimensions of the tank over the years, it is not surprising that gaps develop.

To mitigate some of these problems, the foam seal was developed. Theoretically, the foam seal will adjust itself to unevenness in the surface of the tank shell, even to areas between rivet heads. The less dense the foam and the softer its plastic cover is, the more readily it will fit itself to small imperfections in the wall surface. On the other hand, the plastic envelope must be hard enough and thick enough to withstand abrasion and cutting; the foam must be sufficiently dense to withstand compression and retain elasticity. So a compromise results and the foam seal loses some of its potential for perfect sealing and some of its potential for long life. When a foam tube seal fails it is either because it becomes torn and allows the foam to become oil-soaked, or high compressive forces destroy its elasticity. A tendency to form wrinkles as it is forced out-of-round leads to gap formation.

To cover up any gaps that occur in the primary seal, one may install a secondary seal, hoping the gap in the two seals may not line up vertically. A good secondary seal should be either softer or harder than the primary seal with the hope that the different type of closure will add to the overall effectiveness of the dual seals. The secondary seal should also have the potential to reach out further than the primary seal and thus cover up large gaps.

The most common types of secondary seals are the foam or liquid filled tube seals, the solid "high pressure" seal, and the clinging wiper seal. The secondary tube seal is usually considerably smaller (less diameter) than the primary tube seal, and may have a softer envelope. The smaller diameter, the greater softness and the greater "throw" (potential to extend further than the primary seal) make it effective when used in conjunction with either a shoe or tube seal as the primary one. It is, of course, subject to the same tearing, and the potential to wrinkle and form gaps as the primary tube seal.

Solid secondary seals include the spring-loaded Maloney seal and the solid elastomer seal of the ultra-type. Both of these seals function by the extra pressure they exert on the tank wall, their ability to fit into smaller tank bulges, and their greater "throw". Although the pressure exerted is an advantage to the seal, it is also a defect in that it may catch on protrusions such as rivet heads and be ripped off, particularly when the roof is ascending; it may also destroy any coating on the tank wall. Hence, the Maloney seal does not appear to be adapted to riveted tanks.

The wiper seal has the advantage of long "throw" and some of the softness properties of the tube seal. It probably is somewhat cheaper.

"Best available seal technology" implies inclusion of economic factors such as original cost, maintenance costs, and seal life in its determination. Insufficient information was available to make this general decision.

The age, construction, and condition of floating-roof tanks varies greatly. It must be emphasized therefore, that the best method of minimizing gaps for one tank is not necessarily the best for another.

Riveted tanks display gaps of the same magnitude as the dimensions of surface protrusions (e.g., rivet heads, butt straps, course overlaps) when they are impinged upon by even the most effective primary seal. Secondary foam tube or similar seals will minimize the number and size of gaps that line up vertically in a riveted tank. Whether or not riveted tanks may be modified (by gunnite or other coatings)

sufficiently to eliminate gaps has not been demonstrated. The best methodology for minimizing seal gaps in riveted tanks appears to be a primary shoe seal plus a secondary tube (or similar) seal. In order to meet gap minimization regulations even with this "best" methodology, exemptions for protrusions inherent in tank construction (rivet heads, etc.) are required.

Perfectly round (or nearly so) welded tanks in clean service may meet a "no gap greater than 1/8-inch" criterion with primary shoe or tube seals only. Many welded tanks with primary seals only, or a combination of primary and secondary seals may show "no gaps greater than 1/8-inch" at many roof levels and still show limited gaps up to 1/2-inch at a few other levels. This is apparently due to stresses that developed during erection, or by environmental changes during use. The best method of minimizing seal gaps for welded tanks appears to be either a primary shoe or tube seal plus a secondary seal of the tube or pressure type. Even so, gaps up to one-half inch may appear at some roof levels depending on the configuration of the specific tank.

CHAPTER VIII

RECOMMENDATIONS

CHAPTER VIII

RECOMMENDATIONS

1. Seal gap size should not be over-emphasized as the controlling variable (to the exclusion of other variables) that may affect hydrocarbon emission rates from floating-roof storage tanks. Further research should be conducted to identify the relative importance of the many potential variables. Such results would point the direction for developing new control technology.

2. Best available seal technology should not be defined without having sufficient emission data to verify the reduction in emissions attributable to the use of a given seal on a specific application. Without emission measurements data, conclusions may be drawn that would require emphasis on the wrong parameters to reduce hydrocarbon emissions.

3. The API Method for measuring hydrocarbon losses from floating-roof storage tanks (API-2512) should be modified to include sampling and analytical procedures similar to those developed during this investigation.

4. The API Method for estimating, by calculation, the hydrocarbon losses from floating-roof storage tanks (API-2517) should be reviewed and updated to reflect current technology in tank, roof, and seal designs. The updated bulletin should include data on double-deck floating roofs and various types of secondary seals.

CHAPTER IX

BIBLIOGRAPHY

CHAPTER IX

BIBLIOGRAPHY

"Compilation of Air Pollutant Emission Factors AP-42," U.S. Environmental Protection Agency, February 1976.

"Evaporation Loss from Floating-Roof Tanks," API Bulletin 2517, February 1962.

"Evaluation of Methods for Measuring and Controlling Hydrocarbon Emissions from Petroleum Storage Tanks," Report to U.S. Environmental Protection Agency by Battelle, Columbus Laboratories, Columbus, Ohio, November 1976.

"Floating Roof Emission Test Program," Report to Standard Oil Company (Ohio) by Chicago Bridge & Iron Company, November 1976.

Gray, Douglas C. "Solvent Evaporation Rates," American Industrial Hygiene Association Journal, November 1974.

Gilbert, Theodore E. "Rate of Evaporation of Liquids into Air," Journal of Paint Technology, November 1971.

"Mobil Oil Corporation - Floating Roof Tank Evaporative Loss Study," Preliminary Report to California Air Resources Board Workshop, December 17, 1976.

"Revision of Evaporative Hydrocarbon Emission Factors," Report to U.S. Environmental Protection Agency by Radian Corporation, Austin, Texas, August 1976.

"Standard Method of Test for Density and Specific Gravity of Liquids by Bingham Pycnometer," ASTM Designation: D-1217-54, American Society for Testing of Materials.

Standard Oil Company of California, Western Operations, Inc. Report for Public Hearing, June 25, 1976 to California Air Resources Board.

"Storage of Volatile Liquids," Chicago Bridge and Iron Company Monograph.

"Tentative Methods of Measuring Evaporative Loss from Petroleum Tanks and Transportation Equipment," API Bulletin 2512, July 1957.

"WOGA/CBI Floating Roof Emission Test Program" - Interim Report to Western Oil and Gas Association by Chicago Bridge and Iron Company, January, 1977.