Note: This is a reference cited in *AP 42, Compilation of Air Pollutant Emission Factors, Volume I Stationary Point and Area Sources.* AP42 is located on the EPA web site at www.epa.gov/ttn/chief/ap42/

The file name refers to the reference number, the AP42 chapter and section. The file name "ref02_c01s02.pdf" would mean the reference is from AP42 chapter 1 section 2. The reference may be from a previous version of the section and no longer cited. The primary source should always be checked.

EXPLANATORY NOTE

Docket Number A-80-7 Document Date: August 1978
Document Subcategory II-I-28

FROM: Gregory P. Lathan

TO: Synthetic Fibers NSPS Docket

SUBJECT: Information on Air Emissions Received by EPA from Monsanto Textiles Company, Decatur, Alabama, during the Pullman-Kellogg/ EPA plant visit on July 19, 1978.

Pullman Kellogg
Division of Pullman Incorporated

Research and Development Center
16200 Park Row
Industrial Park Ten
Houston, Texas 77084
Telephone (713) 492-2500

A-80-7

17 July 1978

Mr. Rudy J. Kucera
Monsanto Textiles Company
Decatur, Alabama 35602

Dear Mr. Kucera:

We very much appreciate the courtesy extended to us during the 13 July visit to the Decatur plant.

Enclosed is a report recording what we understand to be the non-confidential information obtained during the visit. Please review it and respond in writing if you concur that the information is non-confidential or if not, please circle that information you classify as confidential and return the marked copy to me. All information identified by Monsanto as confidential will be handled by Kellogg in accordance with our secrecy agreement.

At the conclusion of the discussions, we agreed that Monsanto will provide the following additional information within a two-four week time period.

- More detailed diagrams that show major equipment items and the flow scheme and specific sources of the emissions. These diagrams shall include:

  1) One for the polymer unit.

  2) One for the dope preparation and spinning unit.

  3) One for the solvent recovery unit from spinning.

- An estimate of the manhours required to furnish the following information relative to fugitive emission determination for equipment handling hydrocarbons in the acrylic plant:

  1) Total plant valve count, including size, pressures, type of valve and temperatures.

  2) Flange count including size, pressure and temperature.

  3) Pump count including shaft size, temperature, pressure, pump speed, type of seal.

  4) Information regarding the vent stacks for the process. This includes stack heights, configurations and diameters, the gas flow rates, temperature and gas velocities to the atmosphere.

Monsanto representatives said in general, they believed that fugitive emissions resulting from entering reactors, filters, pumps, piping, etc. for maintanance purposes were larger than the continuous emissions (leaks) from the above mentioned valves, flanges and pumps. EPA will determine at a later date the specific information that will be requested from you regarding fugitive emissions.

Very truly yours,

PULLMAN KELLOGG
a Division of Pullman, Incorporated

W. M. Talbert
Project Manager

WMT:sk
Enclosure

cc: D. C. Mascone(EPA) - w/o encl.

bcc: L. C. Axelrod - w/encl.
D. O. Moore - w/encl.
R. B. Mahley - w/encl.

TRIP REPORT: MONSANTO ACRYLIC FIBERS PLANT

TABLE OF CONTENTS

A. Process Description and Flowsheets

B. Estimated Emissions

C. Control Devices

D. Appendix: Agenda

A. PROCESS DESCRIPTION AND FLOWSHEETS

1. Tank farm and storage.

Monsanto's Acrylic Fibers plant at Decatur, Alabama has a name plate capacity of 320 million lb/yr Acrylic fibers and uses 283.4 million lb/yr acrylonitrile at name plate capacity. A description of the monomer storage facility and estimated emissions provided by Monsanto follows.

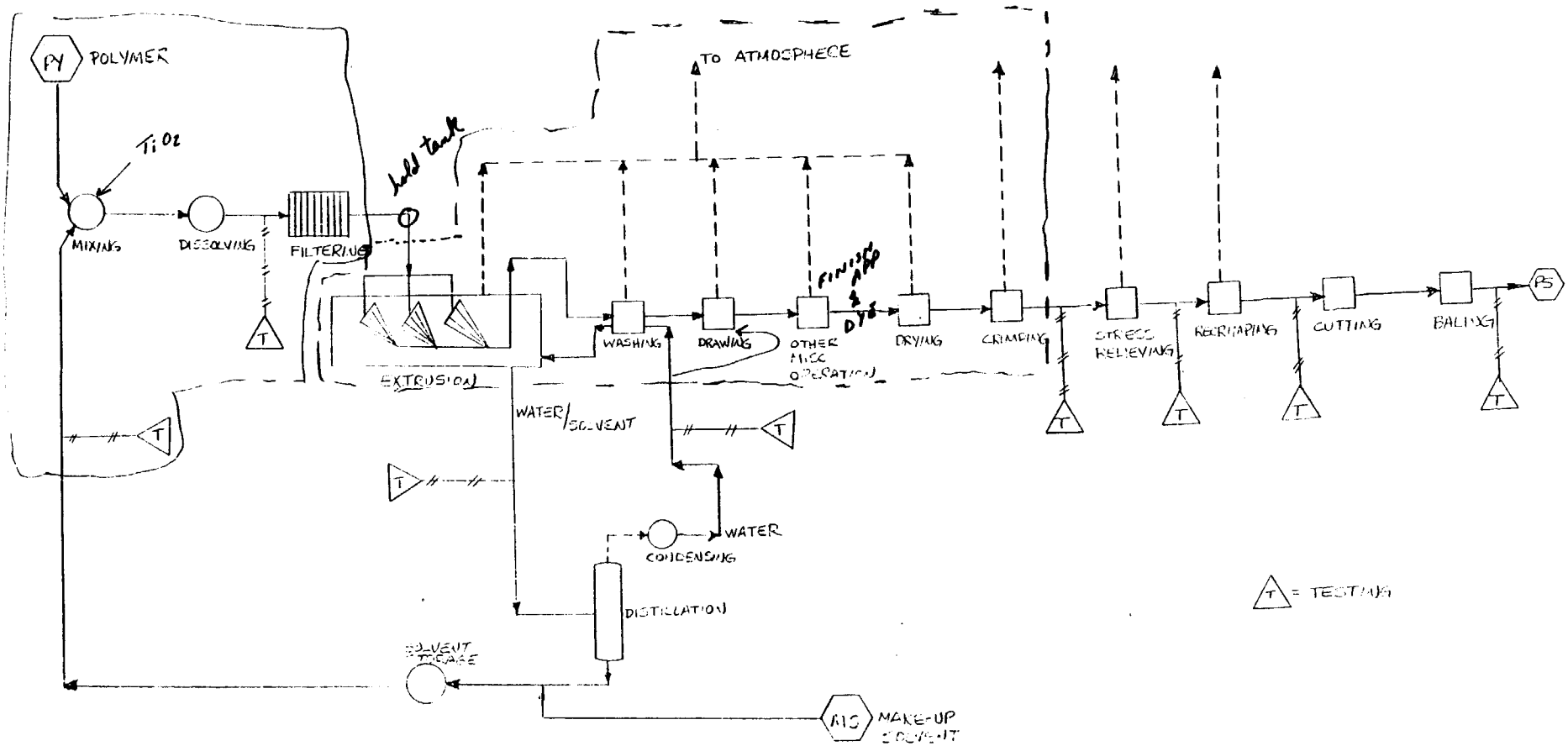
P4
POLYMER
TiO2
MIXING
DISSOLVING
FILTERING
hold tank
TO ATMOSPHERE
EXTRUSION
WASHING
DRAWING
OTHER MISC OPERATION
FINISH APP & DYE
DRYING
CRIMPING
STRESS RELIEVING
RECRIMPING
CUTTING
BALING
P5
T
WATER/SOLVENT
WATER
CONDENSING
DISTILLATION
SOLVENT STORAGE
M3
MAKE-UP SOLVENT
= TESTING

ACRILAN TANK FARM

MONSANTO COMPANY

July 11, 1978

E. A. Blackburn

The Acrilan plant has a name plate fiber capacity of 320 $\overline{M}$ pounds annual rate. The usage of acrylonitrile at name plate capacity is estimated to be 283.4 $\overline{M}$ pounds.

Most of the AN arrives by barge from Texas City, Texas, however, sometimes small quantities are received by railroad tank cars mainly if the barges are delayed for any reason. The barge holds 5 $\overline{M}$ pounds. Monsanto receives about 57 barges per year or 4-3/4 barges per month for the Acrilan process, assuming name plate capacity.

When the barges arrive at Decatur they are immediately unloaded using flexible couplings and an on-board pump. As you can see from the flow diagram this AN is transferred to bulk storage tanks where it is then distributed to the user.

There are three bulk storage tanks in this area. Tank #1 (north) and tank #3 (south) are floating roof tanks. Tank #2 (middle) is a fixed roof tank. Volumes of these tanks are: #1, 7.7 $\overline{M}$ lbs.,; #2, 7.8 $\overline{M}$ lbs.; #3, 17.8 $\overline{M}$ lbs.--for a total of 33.3 $\overline{M}$ lbs.

The acrylonitrile is then fed to two smaller storage tanks for distribution to the individual areas. These two tanks are identical fixed roof tanks--each having a volume of 2.5 $\overline{M}$ lbs. One tank feeds the north polymer areas while the other tank feeds the south polymer area.

The Acrilan system also has three very small fixed roof tanks which are used occasionally for standby storage. Volume of these tanks is 575 M pounds each.

Vapor loss from all the AN storage tanks in the Acrilan process at name plate capacity is calculated to be 0.7# AN/1000# fiber.

The Acrilan plant uses vinyl acetate in the process. One fixed roof tank with a volume of 2.5 $\overline{M}$ pounds is assigned to this service. Vapor losses from this tank are estimated to be 0.085# VA/1000# fiber.

Vinyl bromide and vinylidene chloride are stored in pressurized tanks and there are no losses.

Acrylonitrile Losses (Lbs./year)

Tank	Diameter (Ft.)	Tank Type	Working Loss	Breathing Loss	Total
#1 Bulk	67	Ext. Floating Roof	0	4600	4600
#2 Bulk	67	Fixed Roof	20,000	33,500	53,500
#3 Bulk	100	Ext. Floating Roof	0	7000	7000
#1 Day #2 Day	50 50	Fixed Roof	83,200	48,400	131,600
#1 Auxiliary #2 Auxiliary #3 Auxiliary	24 24 24	Fixed Roof	0	20,000	20,000
Total			103,200	113,500	216,700

Vinyl Acetate Losses (Lbs./Year)
Estimated

#4	50	Fixed Roof	2920	24,200	27,120

Reference: API bulletins manual WP-14.

ACRILAN TANK FARM

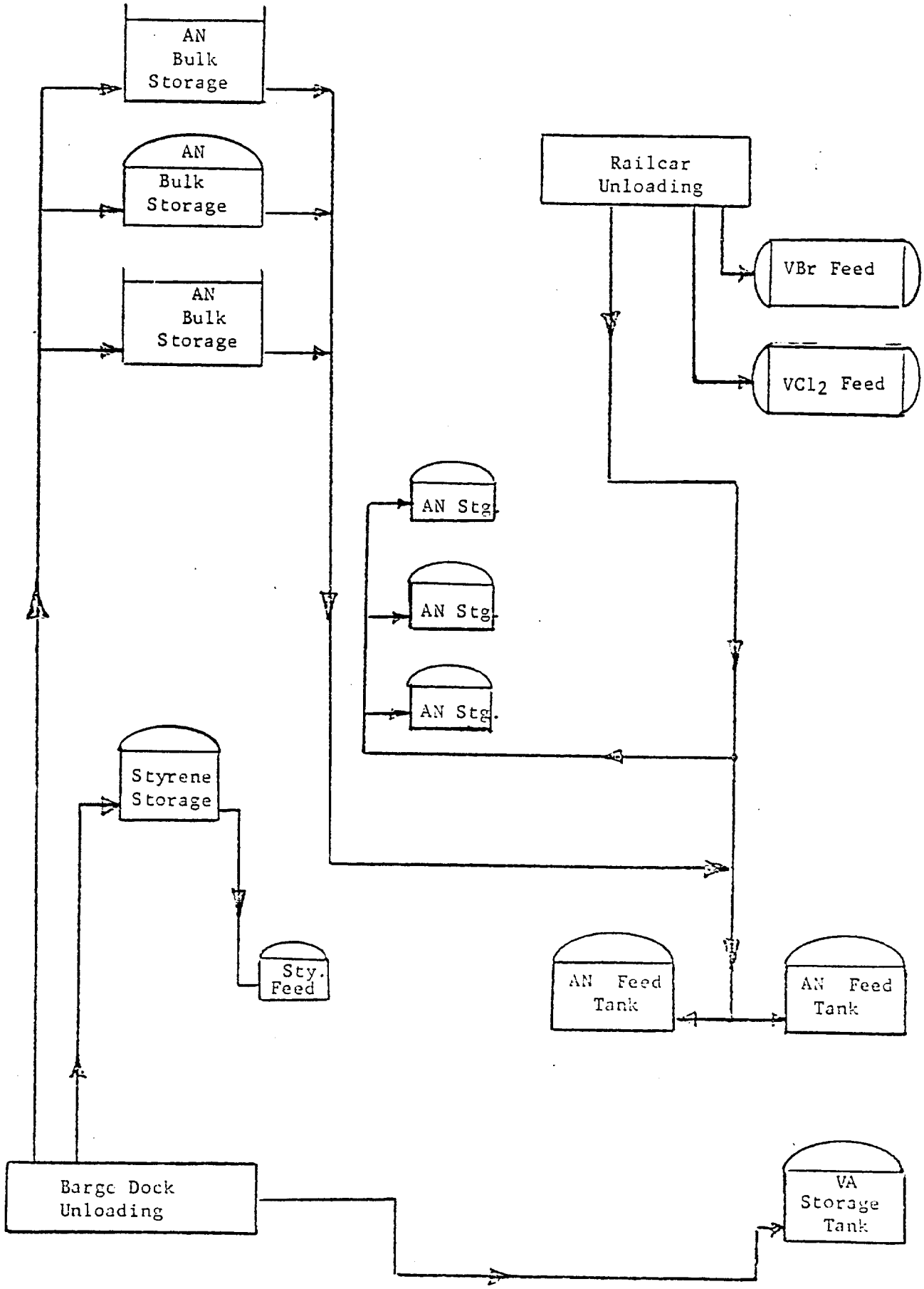

A. PROCESS DESCRIPTION AND FLOWSHEETS (CONT)

2. Polymerization Unit.

Monsanto produces three major types of acrylic polymer which are:

- Type 16 Acrylic
- Type 90 Acrylic
- Type 12 Modacrylic

(a) Type 16

Fresh Acrylonitrile (AN) and Vinyl Acetate (VA) are mixed with recycle monomer from the recovery section on a continuous basis. A solution is prepared from chemicals and water in a separate step and fed along with monomer mixture into the continuous polymerization reactor. Here the polymerization takes place in aqueous suspension. Subsequent processing steps include unreacted monomer removal, monomer recovery* and polymer treating. Polymer processing steps downstream of the reactor consist of primary filtration and filter cake washing to reduce monomer content, followed by reslurrying and secondary filtration. Rotary vacuum filters are used. Monomer (mostly AN) content of the polymer at this point is 0.3%. Subsequent processing steps consist of pelletizing, drying and grinding to produce a powdered polymer product that is stored in bulk bins. Pellet drying is accomplished by blowing air across steam coils and through a moving bed of polymer pellets. Hot, moisture-laden air containing substantial quantities of AN is exhausted directly to the atmosphere

---

*Monomer recovery consists of (1) steam stripping AN monomer from aqueous streams primarily from filtration and washing and scrubber underflow. (2) Water scrubbing AN monomer from various gas streams.

A. PROCESS DESCRIPTION AND FLOWSHEETS (CONT)

from the dryers. This is the major plant AN emission source. The dry polymer powder contains 20-30 ppm AN which exerts an AN vapor pressure to the air of less than 1 ppm.

(b) Type 90

This polymer is formulated from AN, VA, and Vinyl Bromide (VB) monomers. Basic processing steps are identical with those for Type 16.

(c) Type 12

This modacrylic polymer is formulated from AN, VB, vinylidene chloride and other materials. Processing steps are the same as those described in Type 16 above except for slurry stripping which is inserted after reaction polymerization and before primary filtration. The purpose of slurry stripping is to remove bulk monomer from the modacylic polymer prior to further processing steps. Slurry stripping results in substantially reduced AN emissions especially from the dryer.

TYPE 16 AC LIC

CONVENTIONAL CP POLYMER UNIT FUNCTIONAL BLOCK DIAGRAM

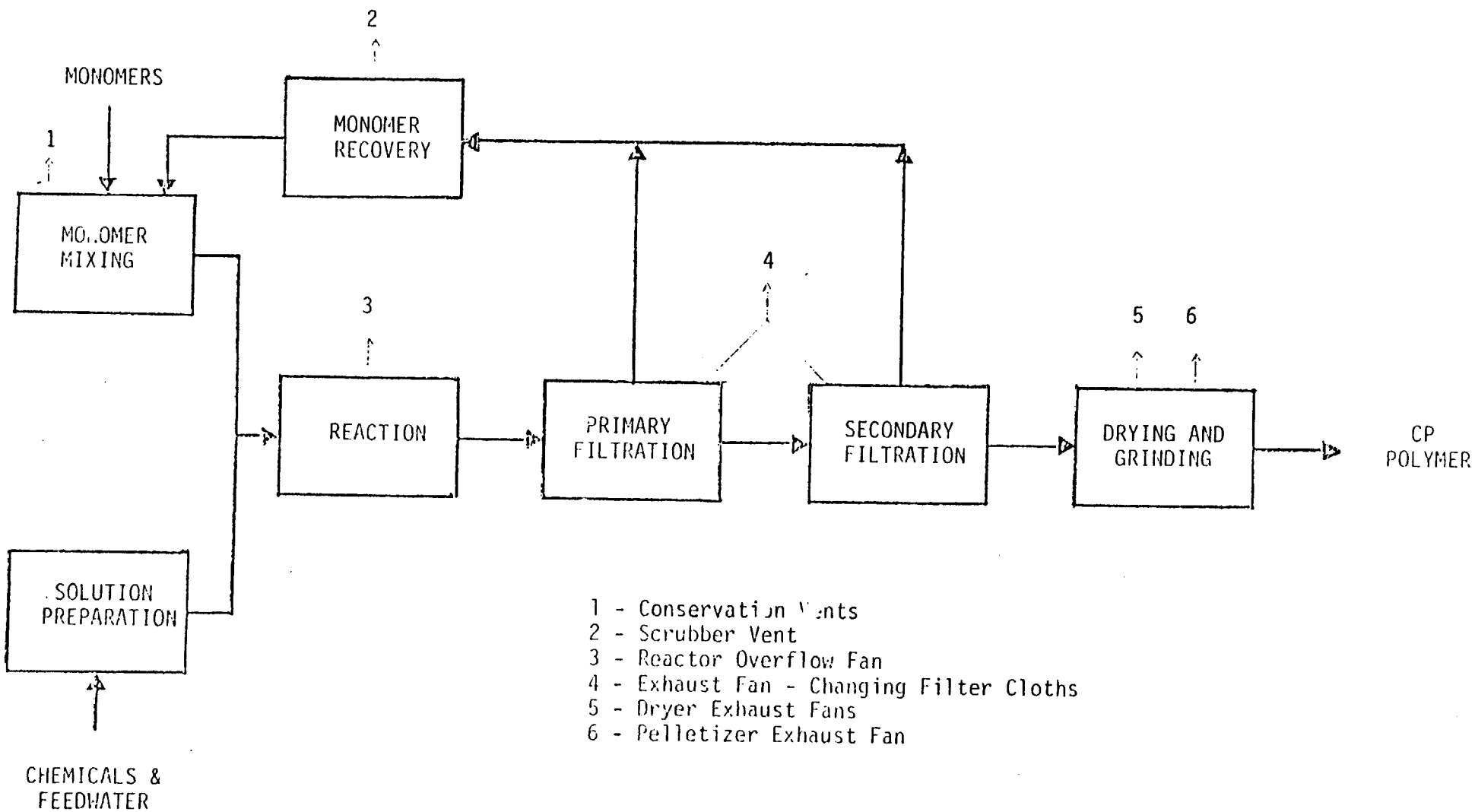

1 - Conservation Vents
2 - Scrubber Vent
3 - Reactor Overflow Fan
4 - Exhaust Fan - Changing Filter Cloths
5 - Dryer Exhaust Fans
6 - Pelletizer Exhaust Fan

TYPE 90 ACRYLIC

CONVENTIONAL CP POLYMER UNIT FUNCTIONAL BLOCK DIAGRAM

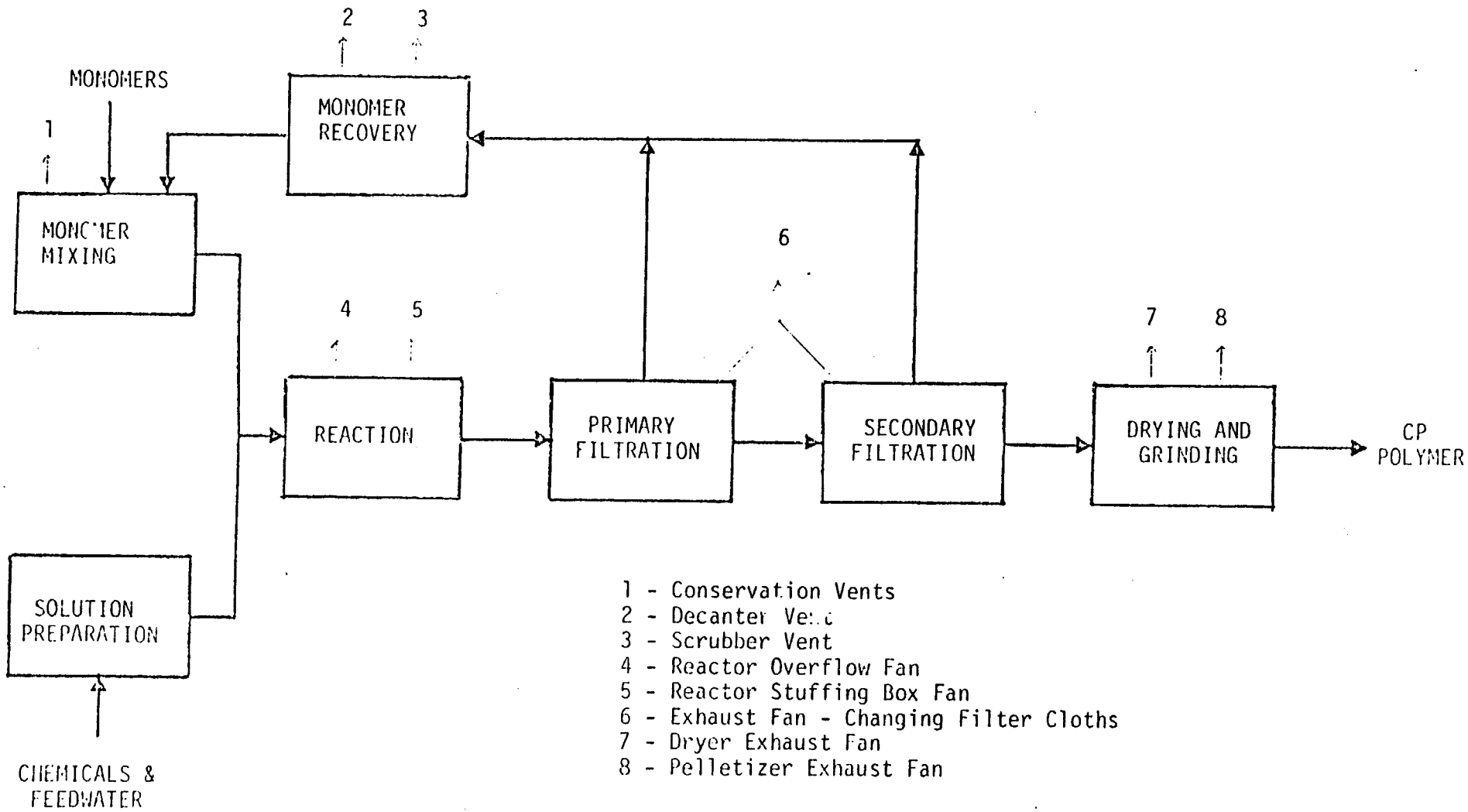

1 - Conservation Vents
2 - Decanter Vent
3 - Scrubber Vent
4 - Reactor Overflow Fan
5 - Reactor Stuffing Box Fan
6 - Exhaust Fan - Changing Filter Cloths
7 - Dryer Exhaust Fan
8 - Pelletizer Exhaust Fan

TYPE 12 MODA YLIC

SLURRY STRIPPED CP POLYMER UNIT FUNCTIONAL BLOCK DIAGRAM

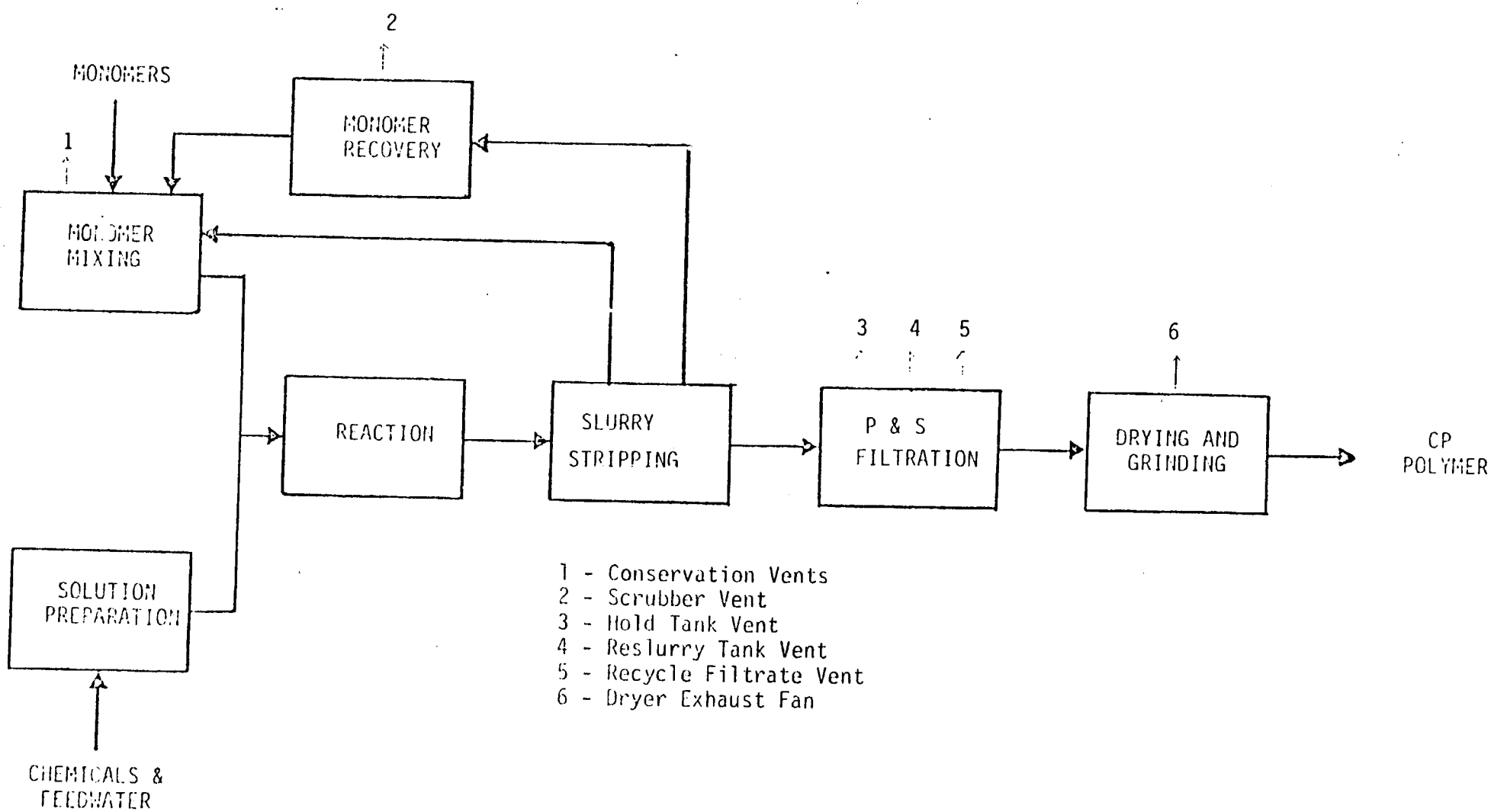

1 - Conservation Vents
2 - Scrubber Vent
3 - Hold Tank Vent
4 - Reslurry Tank Vent
5 - Recycle Filtrate Vent
6 - Dryer Exhaust Fan

A. PROCESS DESCRIPTION AND FLOWSHEETS (CONT)

3. Dope Preparation and Spinning Unit.

Polymer and solvent (diamethylacetamide) along with additives are mixed to form a material called dope of a honey-like consistency. A filtration step employing plate and frame filter presses is used to remove trace impurities prior to the spinning operation. Dope is forced through a spinnerette into a spinning bath containing solvent and water. The polymer coagulates into fibers which are continuously washed, stretched, dryed, crimped and bundled. Solvent emissions from this operation originate from several sources. The principle ones are vents from the spinning baths and the extraction and drying operations.

DOPE PREPARATION & SPINNING UNIT FUNCTIONAL BLOCK DIAGRAM

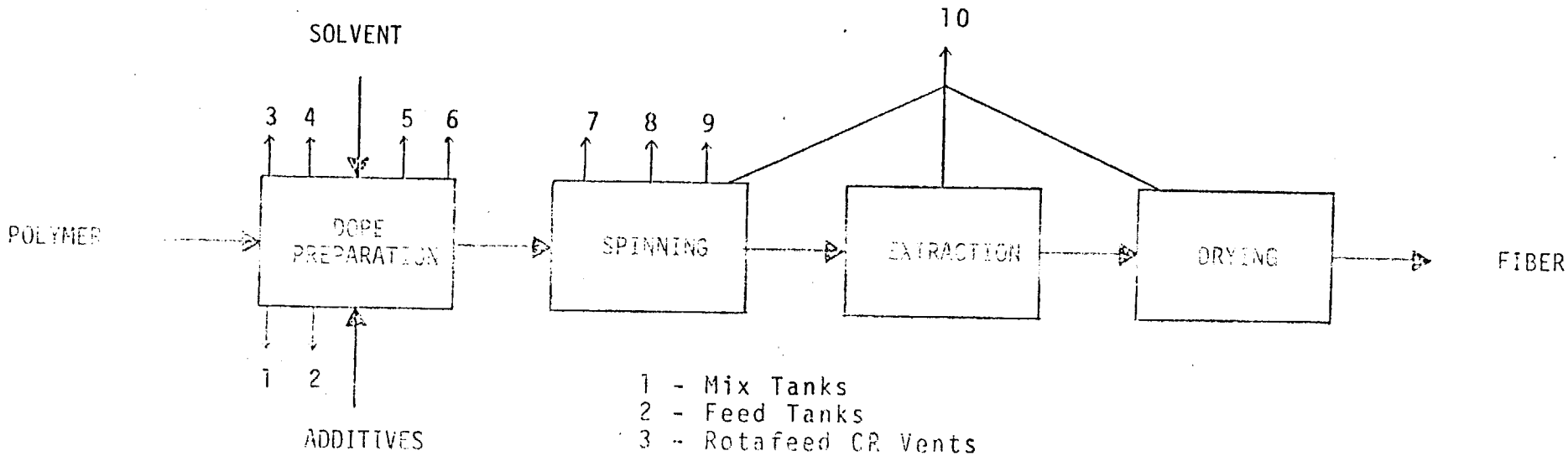

1 - Mix Tanks
2 - Feed Tanks
3 - Rotafeed CR Vents
4 - Slurry Tank Vents
5 - Area Exhaust Fans
6 - Filter Press Exhaust Fans
7 - Jet Bath Vents
8 - Dilute CR Tank Vents
9 - Conc. CR Tank Vents
10 - Spinning Machine Vents

A. PROCESS DESCRIPTION AND FLOWSHEETS (CONT)

4. Solvent Recovery Unit.

The purpose of the solvent recovery unit is to recover dimethylacetamide solvent from a dilute solvent/water stream from spinning and extraction. There are two main areas in the recovery unit.

- dilute solvent storage and separation
- concentrated solvent storage and separation

Distillation operations are used to separate water from solvent. Water is recycled to spin baths and solvent is recycled to dope preparation.

Vent streams are shown on the block diagram; however, no figures were furnished for dimethylacetamide losses.

SOLVENT RECOVERY UNIT FUNCTIONAL BLOCK DIAGRAM

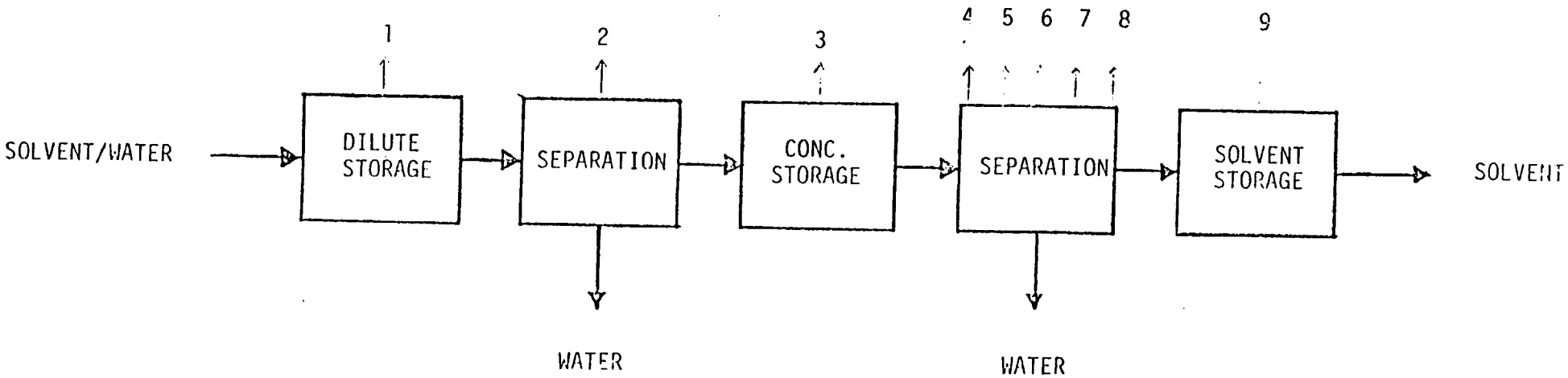

1 - Atmospheric Vents
2 - Vacuum Jet Vents
3 - Atmospheric Vents
4 - DMA Removal Column Vent
5 - DMA Bottoms Tank Vent
6 - Column I Heater/Cond. Vent
7 - Pan Dryer Manway
8 - Pan Dryer Overflow
9 - Atmospheric Vents

A. PROCESS DESCRIPTION AND FLOWSHEETS (CONT)

5. Solvent Manufacturing Unit.

Makeup solvent required by the process is prepared at the plant site in a separate manufacturing facility. Acetic acid is reacted with dimethylamine to form dimethylacetamide.

Major vents which are shown on the block diagram are:

- scrubber vent
- heels column feed tank vent

SOLVENT MANUFACTURING UNIT FUNCTIONAL BLOCK DIAGRAM

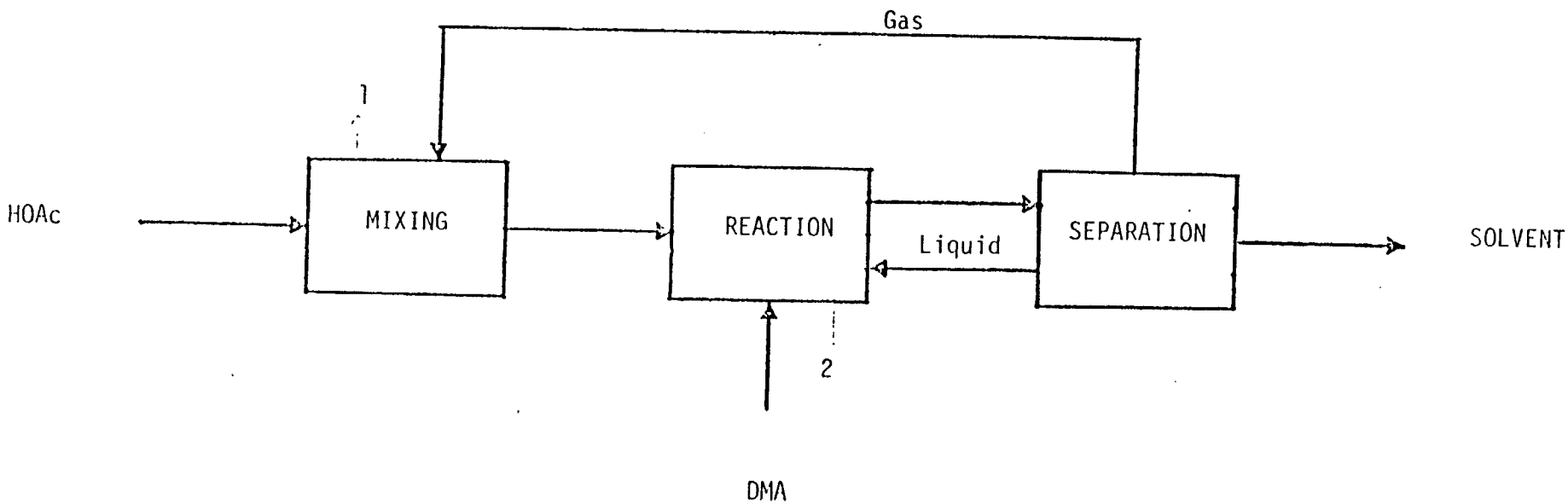

1 - Scrubber Vent
2 - Heels Column Feed Tank Vent

B. ESTIMATED EMISSIONS

1) Storage

	#/Yr	#/1000 #Fiber
AN Losses	216,700	0.7
Vinyl Acetate Losses	27,120	0.085

2) Polymerization Unit

ACRILAN INTERMEDIATES GASEOUS MONOMER EMISSIONS

(LB./1000 LB. POLYMER)

	TYPE - 16	TYPE -90	TYPE -12
DRYER STACK	17.0*	16.0	0.13
UNACCOUNTABLE	2.0	12.0	7.5**
SLURRY STRIPPED	.06 - .13	.06 - .13	< 7.5

* 5.44 MM lb/yr if all production assumed to be Type 16
Dryer vent concentration 63.6 ppm (v)
Composition for Type 16: AN - 70%
VA - 30%
(Saturated with water, temperature 150-175°F)

NOTE: Dryer vent gas flow = 1.9125×10^6 SCF/1000 lb fiber
$612{,}000 \times 10^6$ SCF/yr or
1.275×10^6 SCFM based on
8,000 hr/yr

**One half of Total Unaccountable Monomer Loss

$$\frac{\left[\frac{(2+17)(.5)}{1000} + \frac{(16+12)(.5)}{1000}\right] 320(10)^6}{2000} = 3960 \text{ Tons}$$

$$\frac{16+12}{2000(1000)} 320(10)^6 = 4480$$

$$\frac{(2+17)}{2000(1000)} 320(10)^6 = 3040$$

3) Dope Preparation, Spinning

GASEOUS SOLVENT (DIMETHYLACETAMIDE) EMISSIONS

(LB./1000 LB. FIBER)

10.0	Spinning Machine Vent
1.0	Jet Bath Vent
4.6	Heat Treatment
3.0 - 5.0	Unaccountable
18.6 - 20.6	Total

4) Solvent Recovery (LB/1000 LB. Fiber)

0.47	Dimethylamine

C. CONTROLS

Control devices employed include the following:

- Slurry stripping for type 12 polymer to reduce AN losses from downstream equipment.
- Vent hood on reactor outlet.
- Scrubber installed to remove AN vapors from miscellaneous gas streams.

D. APPENDIX: AGENDA

Agenda

EPA Visit - July 13, 1978

Time	Item
07:30	Breakfast - Holiday Inn
	D. C. (Dave) Mascone, EPA Engineer D. (Dennis) Crumpler, EPA Engineer W. (Wayne) Talbert, Pullman-Kellogg Engineer C. (Cliff) Click, Pullman-Kellogg Engineer O. (Oren) Moore, Pullman-Kellogg Engineer
	R. J. (Rudy) Kucera, Monsanto L. O. (Lee) Chambers, Monsanto E. A. (Ed) Blackburn, Monsanto
08:30	Welcome to Plant - Staff Conference Room
	W. B. Smith, General Manufacturing Supt. - Acrilan
	Attendance:
	EPA and Pullman-Kellogg Guests J. L. Rasmussen, General Mfg. Supt. - Nylon, Decatur P. H. Hobson, Director of Environmental Operations - MTC J. M. Schroy, Environmental Control - CED W. L. Matthews, Environmental Affairs Representative E. P. Brignac, Manager - CED R. L. Broad, Patent Attorney A. P. Carter, Technical Superintendent
08:45	Overview of Plant - Staff Conference Room
	W. L. (Bill) Matthews, State Envir. Affairs Representative for Monsanto
09:15	Tank Farm Operations Polymer Process Overview Specific Emissions Data } Staff Conference Room
	E. A. Blackburn, Projects Engineer L. O. Chambers, Process Technical Engineer

:15 (Cont'd.) Attendance:

EPA and Pullman-Kellogg Guests
P. H. Hobson, DEO-MTC
J. M. Schroy, EC-CED
W. L. Matthews, E.A.R.-MC
T. S. Simms, Mfg. Supervisor
D. J. Hargett, Mfg. Supervisor
R. D. Forsythe, Envir. Supervisor-Nylon
R. E. Lawyer, Environmental Specialist
A. L. Downs, Process Technical Supervisor

0:45 Break

1:00 Tour Tank Farm and North Polymer Facilities

Guides:
Tank Farm - E. A. Poteet
E. A. Blackburn

North Polymer - D. J. Hargett
L. O. Chambers

12:00 Lunch - Cafeteria Private Dining Room

Attendance:

EPA and Pullman-Kellogg Guests
W. B. Smith
P. H. Hobson
J. M. Schroy
W. L. Matthews
L. O. Chambers
E. A. Blackburn
R. J. Kucera

13:00 Fiber Process Overview and Specific Emission Data - North Dope Prep Conference Room

L. O. Chambers, Process Technical Engineer

Attendance:

EPA and Pullman-Kellogg Guests
A. F. Jordan, Mfg. Supervisor
P. H. Hobson, DEO-MTC
J. M. Schroy, EC-CED
W. L. Matthews, E.A.R.
G. D. McKelvey, Mfg. Supervisor
E. A. Blackburn, Projects Engineer
T. H. Wolter, Technical Lab Supervisor

14:00 Break

14:10 Tour Dope Prep and North Spinning

Guides: A. F. Jordan
G. D. McKelvey

14:30 Preparation for Summation Session - Staff Conference Room

EPA and Pullman-Kellogg Personnel

15:00 Summation Session - Staff Conference Room

D. C. (Dave) Mascone, EPA

Attendance:

EPA and Pullman-Kellogg Guests
P. H. Hobson, DEO-MTC
J. M. Schroy, Envir. Control, CED
W. L. Matthews, Environmental Allairs Representative
E. P. Brignac, Manager-CED
R. L. Broad, Patent Attorney
A. P. Carter, Technical Superintendent
W. B. Smith, General Mfg. Supt.-Acrilan
L. O. Chambers, Process Technical Engineer
E. A. Blackburn, Projects Engineer
J. L. Rasmussen, General Mfg. Supt.-Nylon
R. J. Kucera

16:00 Close Meeting

Visit coordinator escort guests to lobby (or cars).

Monsanto

MONSANTO TEXTILES COMPANY
Decatur, Alabama 35601
Phone: (205) 552- 2285

August 11, 1978

Mr. W. M. Talbert
Research and Development Center
16200 Park Row
Industrial Park Ten
Houston, Texas 77084

Dear Mr. Talbert:

We have reviewed your trip report and find no problem with information confidentiality.

Attached is the additional information you requested:

More detailed diagrams that show major equipment items, the flow scheme, and specific source emissions:

1. One typical Polymer Plant flow diagram - Print # C1-2009.
2. One typical Dope Prep flow diagram - Print # C1-2011.
3. One typical Solvent Recovery unit - Print # C1-2010.
4. One typical Spinning unit - Print # C1-2007.

An estimate of the manhours required to furnish information relative to fugitive emission determination for equipment handling hydrocarbons in the acrylic plant:

1. Memo detailing Fugitive Emissions developed by EAB and SAS to RJK, 7/19/78.
2. Attached Dryer Exhaust Stack Data Chart.

Best regards,

R. J. Kucera
Environmental Operations

RJK:hj
Attachments

cc: R. F. Crone, Jr.
P. H. Hobson
D. C. Mascone (EPA)
J. M. Schroy

E. A. Blackburn/S. A. Strong

July 19, 1978 (Revised 8/3/78)

EPA - Fugitive Emissions

E. P. Brignac
A. P. Carter
P. H. Hobson - St. Louis
J. M. Schroy - St. Louis
W. B. Smith

R. J. Kucera

I. Fixed Source Count

We have carefully considered the job of counting fixed emission sources in the Acrilan plant. Based on our discussions with EPA and recommendations from J. M. Schroy, we believe data on the following items are required. These data will reflect emissions based on the name plate fiber capacity of 320 $\overline{M}$ AR.

A. Rotating seals (includes pumps and agitators).
   Specific information on each item would be:
   - Size
   - Type
   - Material of Construction
   - Fluid Handled
   - Seal Fluid
   - Temperature
   - Pressure
   - RPM

B. Valves are divided as follows:
   1. Manual and automatic:
      - Gate
      - Plug
      - Globe
      - Ball
      - Diaphragm
      - Relief
   2. Data required for each valve is:
      - Size
      - Type
      - Material of Construction
      - Fluid Handled
      - Temperature
      - Pressure

C. Flanges and Rupture Disc--data required on each flange or rupture disc would be:
   - Gasket Material
   - Size
   - Pressure
   - Temperature
   - Fluid
   - Relief Pressure (for rupture disc, only)

D. Sampling streams containing AN.

E. Unloading transportation vehicles such as barges, tank trucks and tank cars.

F. Emissions from process sewers and the waste treatment plant.

G. Process equipment drainage for maintenance reasons.

H. Calibration and maintenance of automatic instrumentation.

We would recommend the following step-wise approach for actually making the "counts:"

1. A detailed count of the unloading facility.
2. A detailed count of the Tank Farm.
3. A detailed count of "B" polymer plant and then assume that "C" polymer plant would be the same.
4. A detailed count of "A" polymer line and then assume that lines #1 and #2 would be the same.
5. A detailed count of line #3.
6. A detailed count of "C" solvent recovery plant and assume that "A" would be the same.
7. A detailed count of one dope battery and assume that the additional eleven are the same.
8. A detailed count of one spinning machine and assume that the other twenty-five in the north plant and the six in the south annex are the same.

Our estimate for the required time to accomplish this task would be <u>eight man months</u>.

II. <u>Equipment Dismantlement Source Count</u>

A. Emission sources for one "down period:"

<u>Dismantlement Instances</u>

<u>3 Reactor Lines</u>	<u>2 Reactor Lines</u>
61	75

Total emission source instances for 1 year, 10 down time periods:

61 instances/down day x 10 down days/year x 2 (3 reactor lines) = 1220 instances/year.

75 instances/down day x 10 down days/year x 4 (2 reactor lines) = 3000 instances/year.

B. Emissions sources from 1 polymer line for non-down period maintenance and product change-over:

Dismantlements/year = 336.

Total for all lines = 336 x 6 = 2016.

Therefore, total instances from the three types of down periods are:

2016 + 4220 = 6,236 dismantlement instances/year.

Basis for the estimated sources is as follows:

On stream hours	8000 hours/year
Routine or down time hours	765 hours/year
Average down time period	72 hours
Number of down times per year per line	10
Number of polymer lines	6

E. A. Blackburn

E. A. Blackburn

S. A. Strong

S. A. Strong

/hj

DRYER EXHAUST STACKS

Lines	Stack Height Above Grade	Diameter	Flowrate SCFM	Nominal Temp. °F	Velocity Ft./Min.
6	40' to 92'	7' to 14.4'	75,000 to 500,000	150 - 170	3100 - 3400

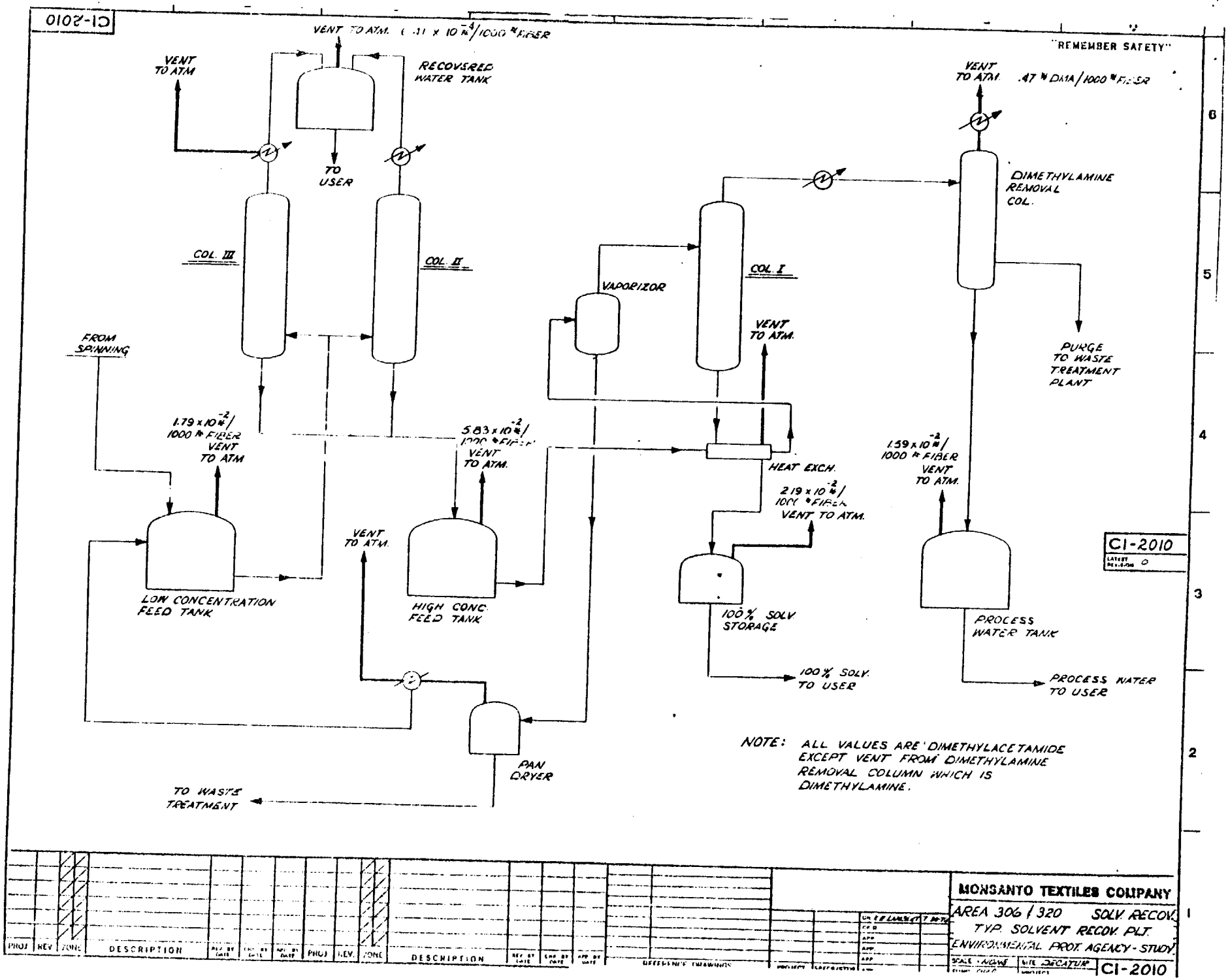

CI-2010
"REMEMBER SAFETY"
VENT TO ATM.
RECOVERED WATER TANK
TO USER
COL. III
COL. II
FROM SPINNING
1.79 x 10^-2 #/1000 # FIBER VENT TO ATM
LOW CONCENTRATION FEED TANK
5.83 x 10^-2 #/1000 # FIBER VENT TO ATM.
HIGH CONC. FEED TANK
VENT TO ATM.
PAN DRYER
TO WASTE TREATMENT
VAPORIZOR
COL. I
VENT TO ATM.
HEAT EXCH.
2.19 x 10^-2 #/1000 # FIBER VENT TO ATM.
100% SOLV. STORAGE
100% SOLV. TO USER
VENT TO ATM. .47 # DMA/1000 # FIBER
DIMETHYLAMINE REMOVAL COL.
PURGE TO WASTE TREATMENT PLANT
1.59 x 10^-2 #/1000 # FIBER VENT TO ATM.
PROCESS WATER TANK
PROCESS WATER TO USER
NOTE: ALL VALUES ARE DIMETHYLACETAMIDE EXCEPT VENT FROM DIMETHYLAMINE REMOVAL COLUMN WHICH IS DIMETHYLAMINE.
CI-2010
LATEST REVISION 0
PROJ REV ZONE DESCRIPTION
REFERENCE DRAWINGS
MONSANTO TEXTILES COMPANY
AREA 306 / 320 SOLV. RECOV.
TYP. SOLVENT RECOV. PLT.
ENVIRONMENTAL PROT. AGENCY - STUDY
SCALE NONE
SITE DECATUR
CI-2010

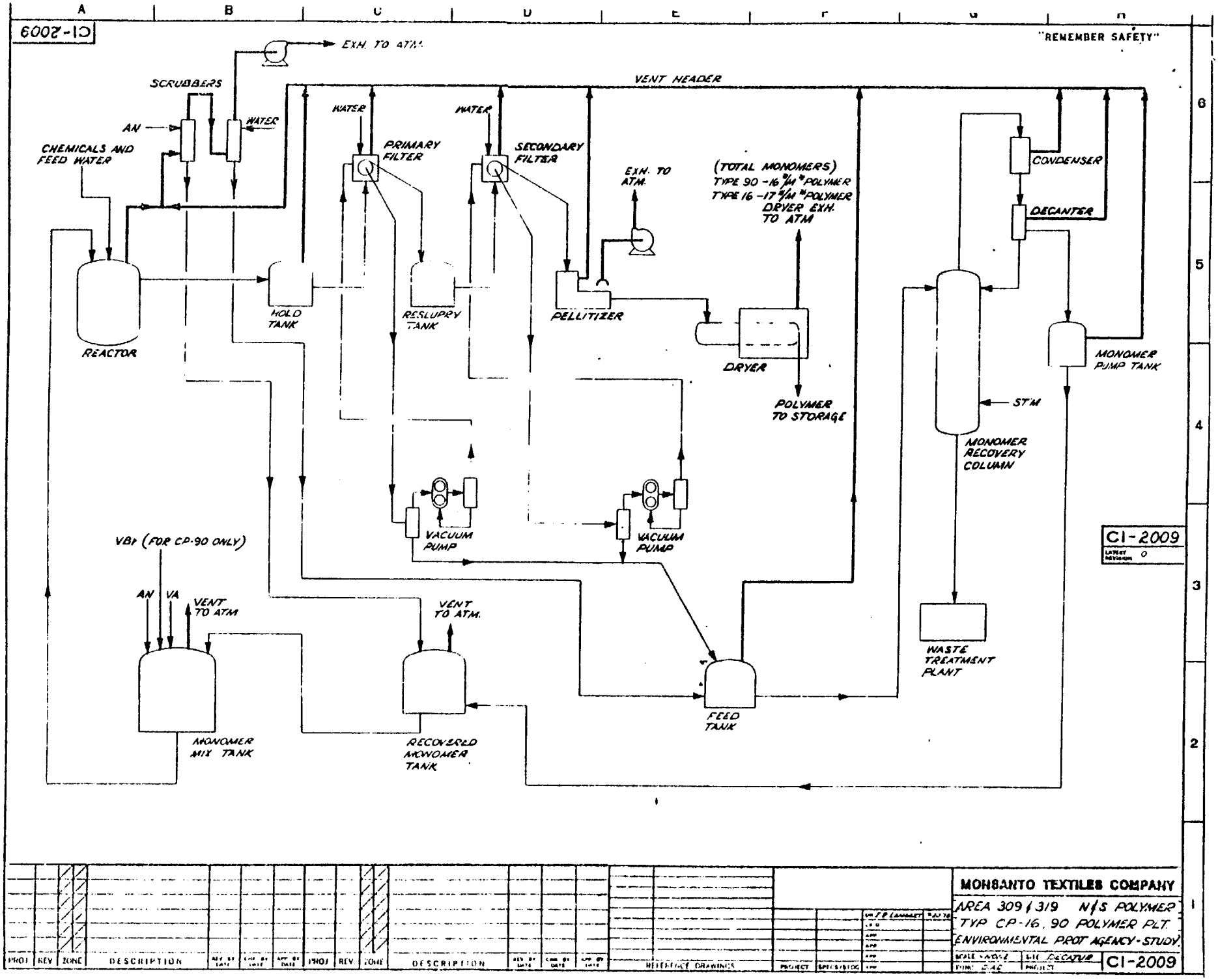
CI-2009
"REMEMBER SAFETY"
EXH. TO ATM.
VENT HEADER
SCRUBBERS
AN
WATER
CHEMICALS AND FEED WATER
WATER
PRIMARY FILTER
WATER
SECONDARY FILTER
EXH. TO ATM.
(TOTAL MONOMERS)
TYPE 90 -16 μm % POLYMER
TYPE 16 -17 μm % POLYMER
DRYER EXH. TO ATM
CONDENSER
DECANTER
REACTOR
HOLD TANK
RESLURRY TANK
PELLITIZER
DRYER
POLYMER TO STORAGE
MONOMER PUMP TANK
STM
MONOMER RECOVERY COLUMN
VACUUM PUMP
VACUUM PUMP
VBI (FOR CP-90 ONLY)
AN
VA
VENT TO ATM
VENT TO ATM.
WASTE TREATMENT PLANT
FEED TANK
MONOMER MIX TANK
RECOVERED MONOMER TANK
CI-2009
LATEST REVISION 0
MONSANTO TEXTILES COMPANY
AREA 309 / 319 N/S POLYMER
TYP CP-16, 90 POLYMER PLT.
ENVIRONMENTAL PROT AGENCY-STUDY
SITE DECATUR
CI-2009
PROJ
REV
ZONE
DESCRIPTION
REFERENCE DRAWINGS
PROJECT
SPECS/DTGS

CI-2011

"REMEMBER SAFETY"

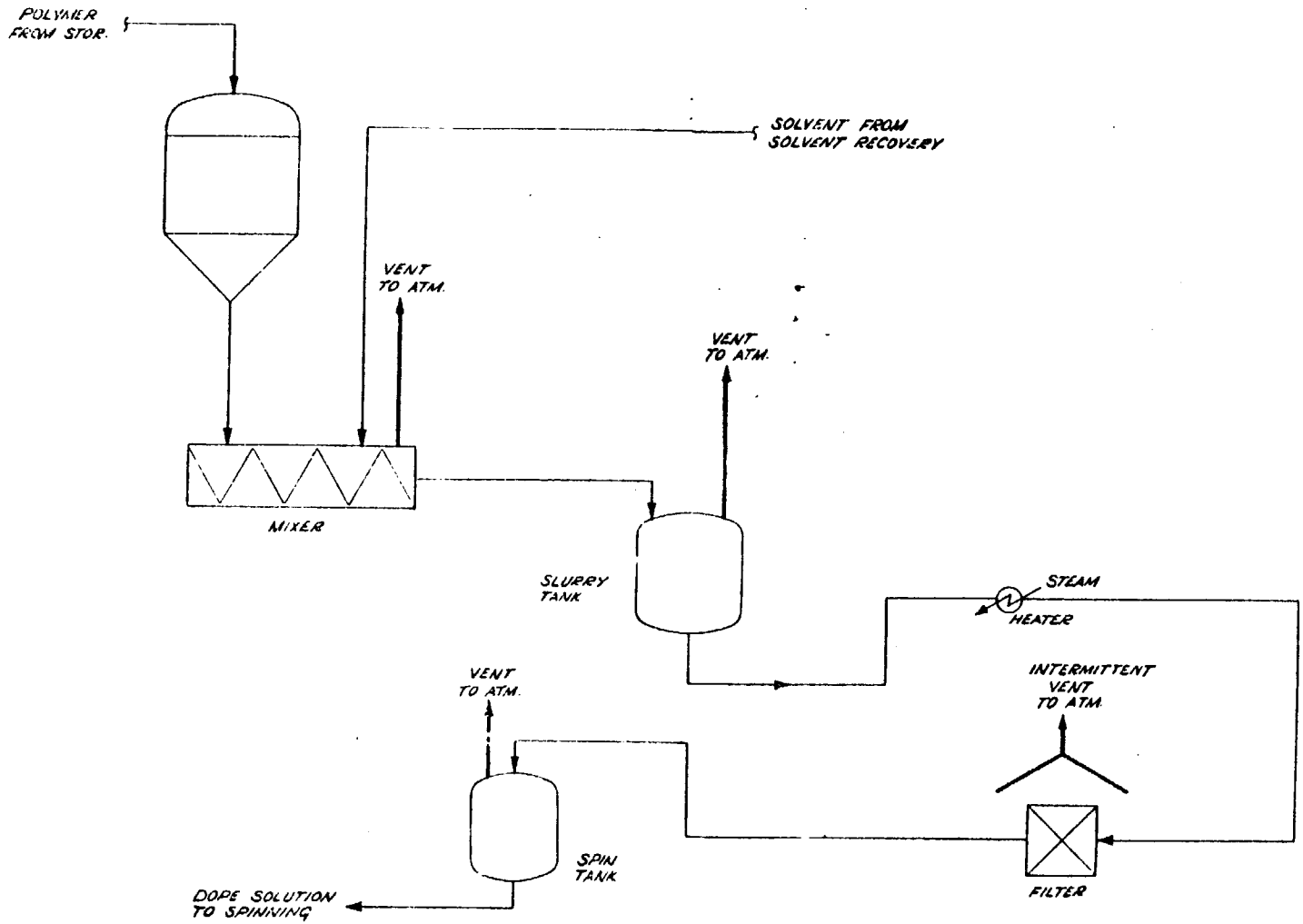

CI-2011
LATEST REVISION 0

PROJ	REV	ZONE	DESCRIPTION	REV BY DATE	CHK BY DATE	APP BY DATE	PROJ	REV	ZONE	DESCRIPTION	REV BY DATE	CHK BY DATE	APP BY DATE	REFERENCE DRAWINGS	PROJECT	SPECS/STDS	DR E.E. LAMBERT	CHK	APP	APP	APP	APP

MONSANTO TEXTILES COMPANY

AREA 304 / 340 N/S DOPE PREP
TYP DOPE PREP PLT
ENVIRONMENT PROT. AGENCY - STUDY

SCALE - NONE | SITE EMPORIUM | FUNC DAQ | PROJECT ~ | CI-2011

CI-2007

"REMEMBER SAFETY"

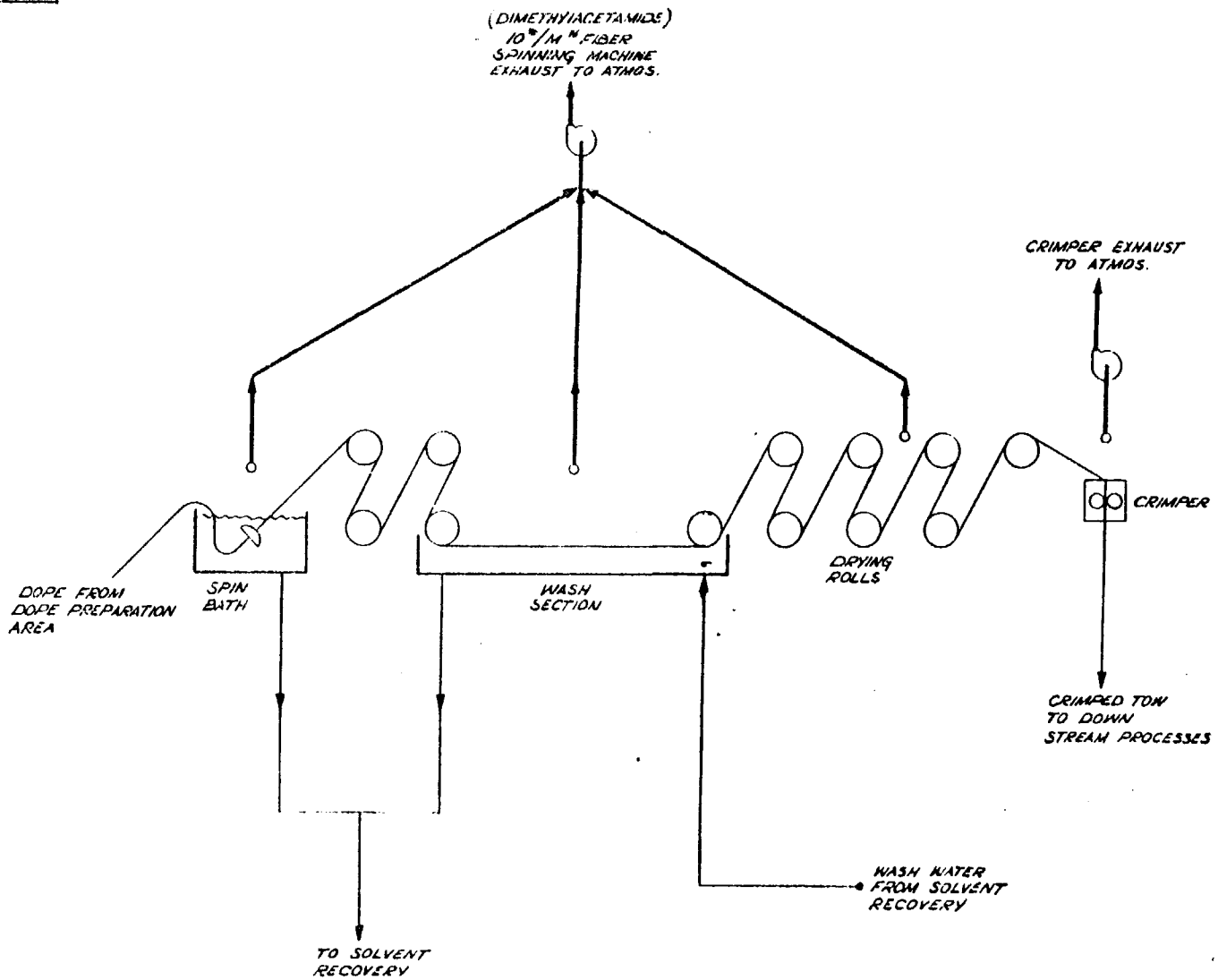

CI-2007

PROJ.	REV	ZONE	DESCRIPTION	REV BY DATE	CHK BY DATE	APP BY DATE	PROJ.	REV.	ZONE	DESCRIPTION	REV BY DATE	CHK BY DATE	APP BY DATE	REFERENCE DRAWINGS	PROJECT	SPECS/STDS	DR. E.R. LAMBERT 5-20-78

MONSANTO TEXTILES COMPANY

AREA 305/341 N/S SPINN.
TYPICAL SPINN. MACHINE
ENVIRONMENTAL PROT. AGENCY-STUDY

SCALE - NONE | SITE DECATUR | CI-2007
FILING DWG | PROJECT

TC 102-R 71

DOPE PREPARATION & SPINNING UNIT FUNCTIONAL BLOCK DIAGRAM

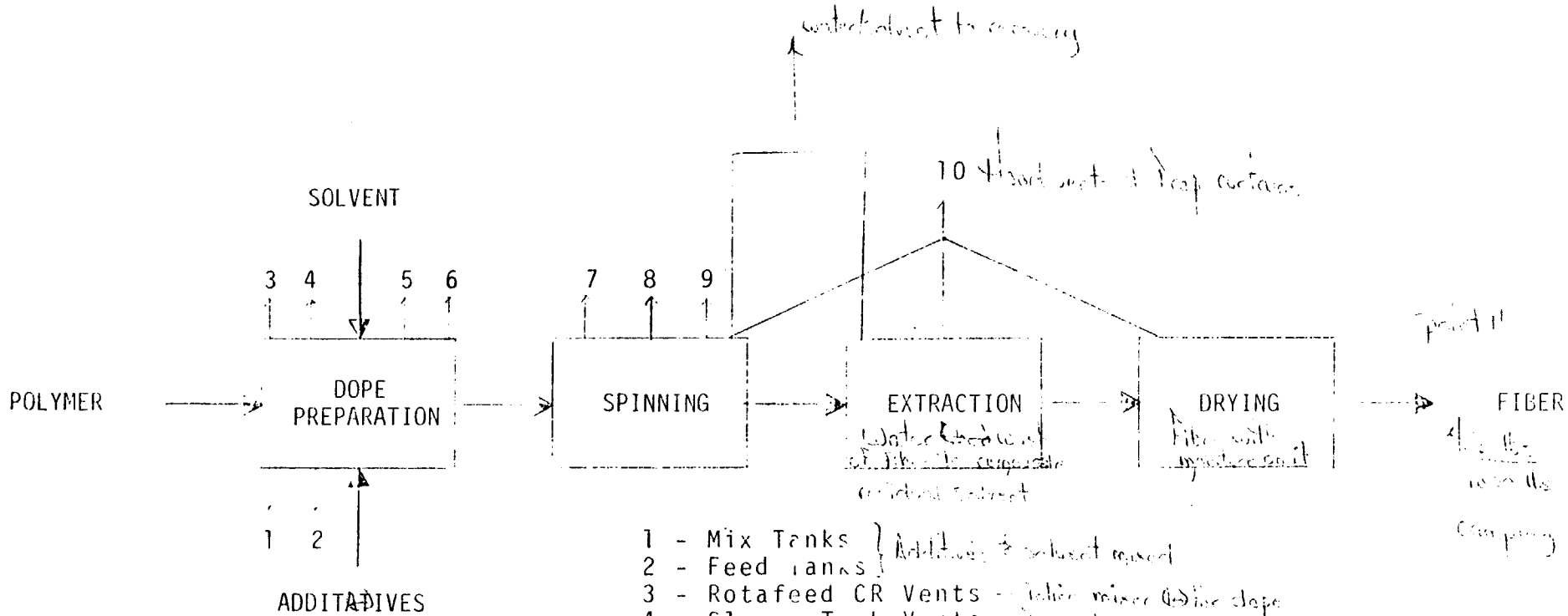

1 - Mix Tanks
2 - Feed Tanks
3 - Rotafeed CR Vents
4 - Slurry Tank Vents
5 - Area Exhaust Fans
6 - Filter Press Exhaust Fans
7 - Jet Bath Vents
8 - Dilute CR Tank Vents
9 - Conc. CR Tank Vents
10 - Spinning Machine Vents

Could prepare further breakdown

CR - Dimethylacetamide

GASEOUS SOLVENT (DIMETHYLACETAMIDE) EMISSIONS

(LB./1000 LB. FIBER)

10.0	Spinning Machine Vent
1.0	Jet Bath Vent
4.6	Heat Treatment (Crimping)
3.0 + 5.0	Unaccountable
18.6	Total

[illegible] 4 lbs / 1000 lbs residual!

SOLVENT RECOVERY UNIT FUNCTIONAL BLOCK DIAGRAM

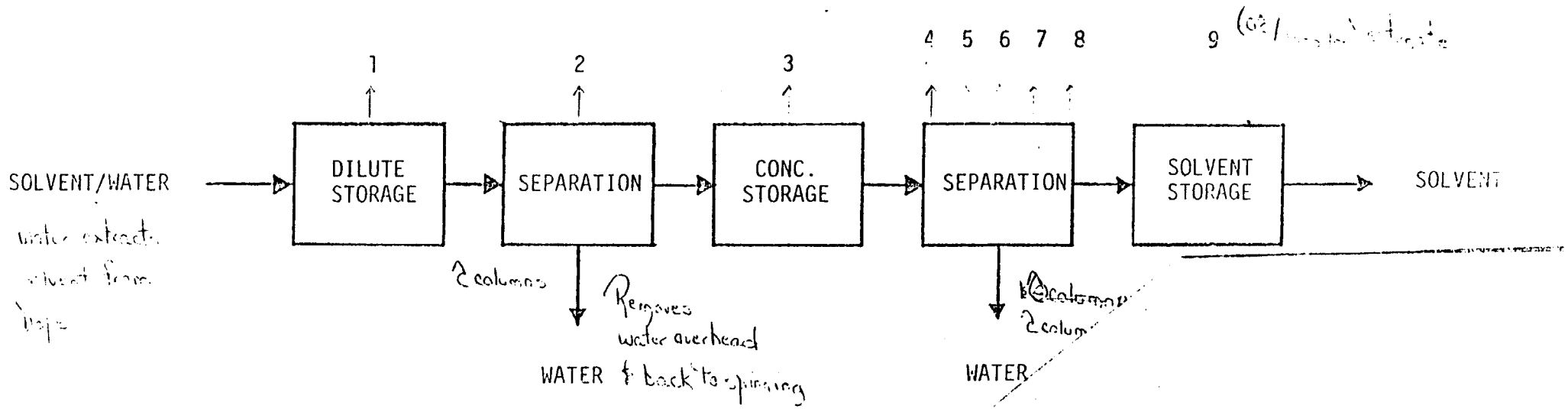

1 - Atmospheric Vents
2 - Vacuum Jet Vents
3 - Atmospheric Vents
4 - DMA Removal Column Vent
5 - DMA Bottoms Tank Vent
6 - Column I Heater/Cond. Vent
7 - Pan Dryer Manway
8 - Pan Dryer Overflow
9 - Atmospheric Vents

SOLVENT MANUFACTURING UNIT FUNCTIONAL BLOCK DIAGRAM

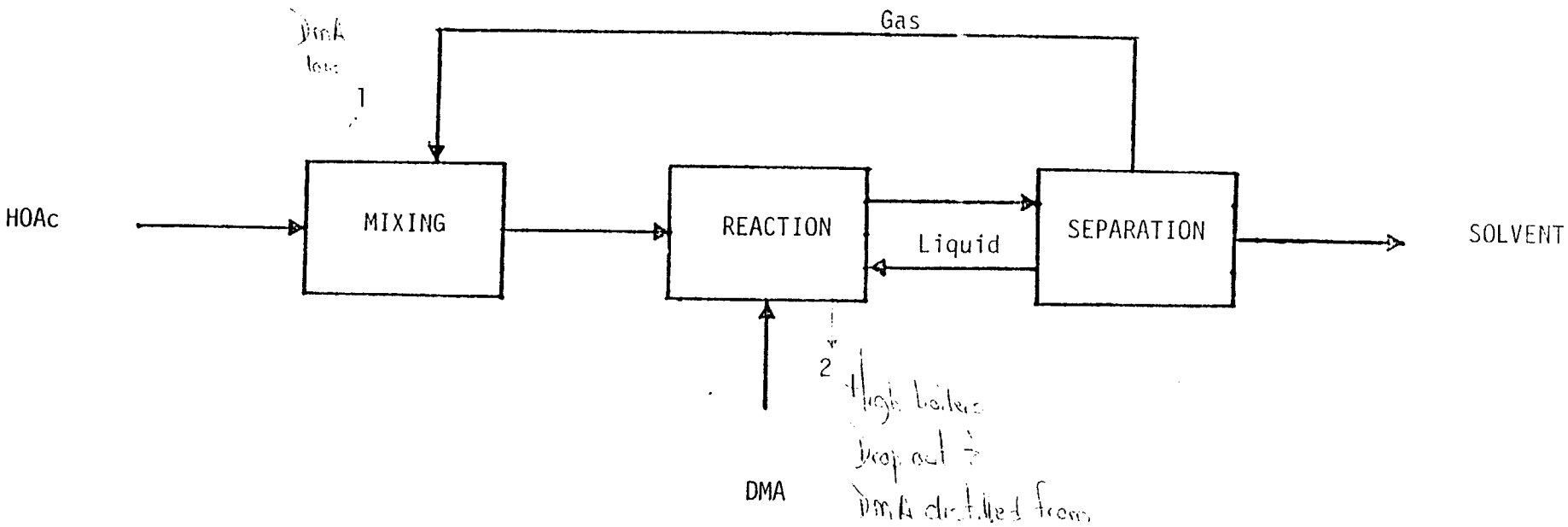

1 - Scrubber Vent
2 - Heels Column Feed Tank Vent

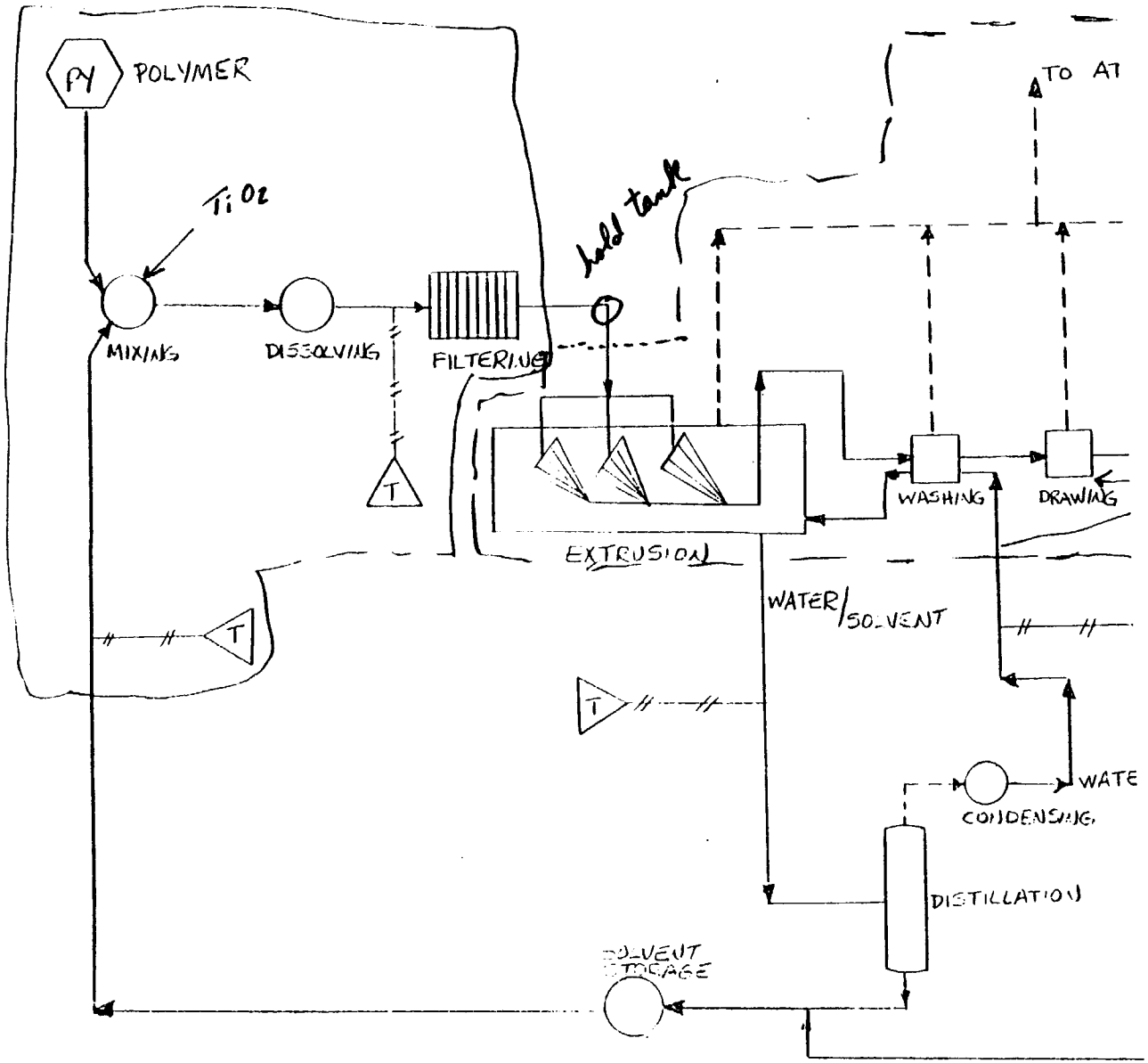

at RTP

Monsanto Textiles
Paul Runge
Gen. Mgr. Manufacturing
800 N. Lindberg Blvd.
St. Louis, Mo. 63166

Patchogue Plymouth Co.
H. L. Eickhoff
V. Pres. Mfg. and Eng.
550 Interstate North
Suite 150
Atlanta, Ga. 30339
"Div. of Amoco Fabrics Co."

American Enka
J. R. Graham
V. Pres. Carpet and Fiber Div.
530 Fifth Avenue
Enka, N.C. 28728

Celanese Corp.
Celanese Fibers Co.
George Asnip, Jr.
V. Pres. and Director
Barclay Downs Dr.
Charlotte, N.C. 28201

Hercules Incorporated
Fibers Division
W. C. Brown
President
910 Market Street
Wilmington, Del. 19898

Allied Chemical Corp.
Fibers Div.
V. A. Romito
V. Pres. Manufacturing
P. O. Box 831
Hopewell, Va. 23860

DuPont, E. I., de Newmours and Co. Inc.
E. R. Krane
President
1007 Market Street
Wilmington, Del. 19899

Dow Badishe Co.
J. T. Faubion
President
Williamsburg, Va. 23185

Fiber Producers

Tennessee Eastman
J. A. Mitchell
Exec. V. Pres. Mfg.
P. O. Box 511
Kingsport, Tenn. 37662

Fiber Industries, Inc.
R. V. Butts
V. President
Barclay Downs
Charlotte, N.C. 28201

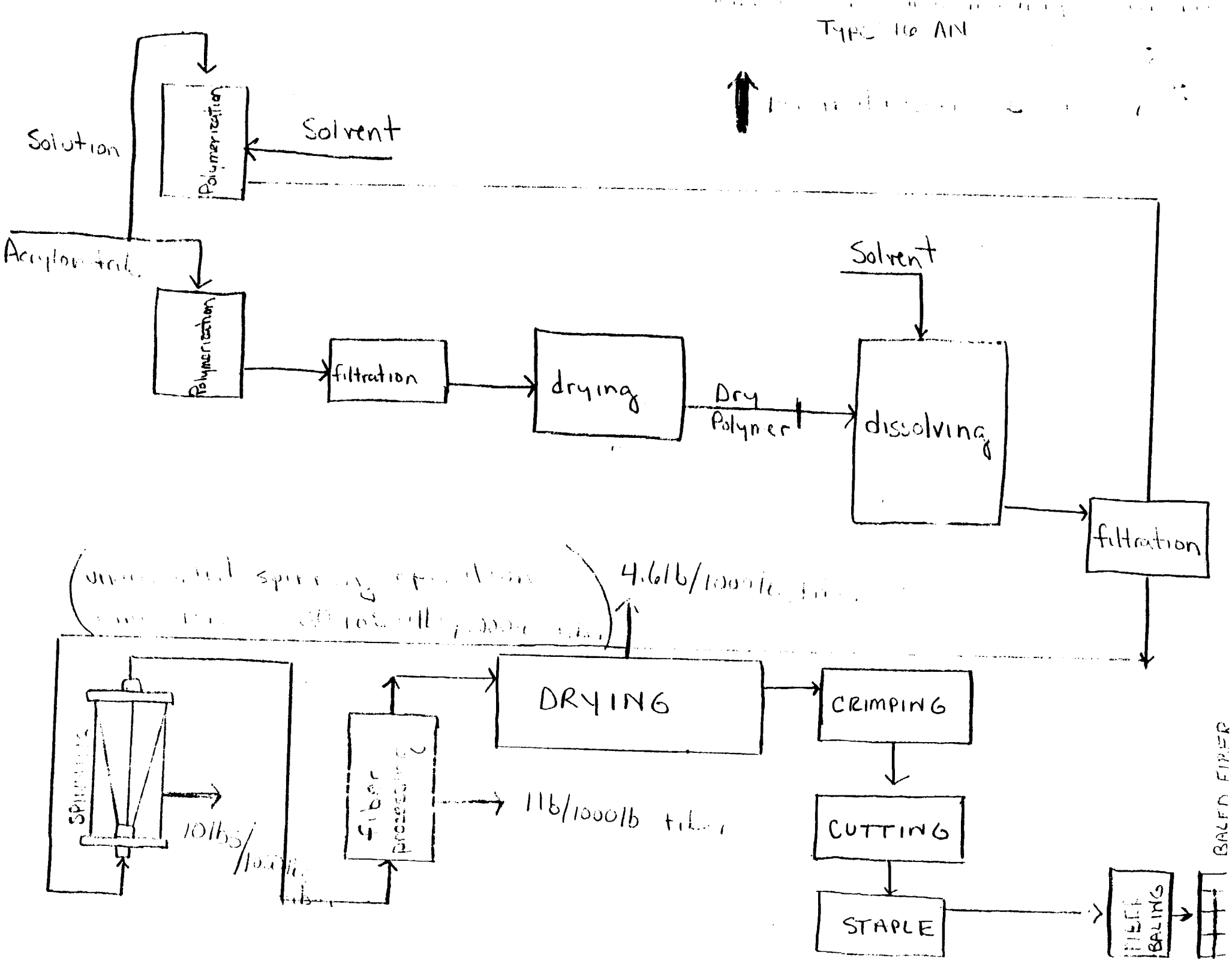
Solution
Polymerization
Solvent
Acrylonitrile
Polymerization
filtration
drying
Dry Polymer
Solvent
dissolving
filtration
4.6lb/1000lb
DRYING
CRIMPING
CUTTING
STAPLE
BALING
BALED FIBER
fiber processing
1lb/1000lb fiber
10lbs/1000lb

at RTP

Fiber Producers

Monsanto Textiles
Paul Runge
Gen. Mgr. Manufacturing
800 N. Lindberg Blvd.
St. Louis, Mo. 63166

Patchogue Plymouth Co.
~~H. L. Eickhoff~~
~~V. Pres. Mfg. and Eng.~~
550 Interstate North
Suite 150
Atlanta, Ga. 30339
"Div. of Amoco Fabrics Co."

American Enka
J. R. Graham
V. Pres. Carpet and Fiber Div.
530 Fifth Avenue
Enka, N.C. 28728

Celanese Corp.
Celanese Fibers Co.
George Asnip, Jr.
V. Pres. and Director
Barclay Downs Dr.
Charlotte, N.C. 28201

Hercules Incorporated
Fibers Division
W. C. Brown
President
910 Market Street
Wilmington, Del. 19898

Allied Chemical Corp.
Fibers Div.
V. A. Romito
V. Pres. Manufacturing
P. O. Box 831
Hopewell, Va. 23860

DuPont, E. I., de Newmours and Co. Inc
E. R. Krane
President
1007 Market Street
Wilmington, Del. 19899

Dow Badishe Co.
J. T. Faubion
President
Williamsburg, Va. 23185

Tennessee Eastman
J. A. Mitchell
Exec. V. Pres. Mfg.
P. O. Box 511
Kingsport, Tenn. 37662

Fiber Industries, Inc.
R. V. Butts
V. President
Barclay Downs
Charlotte, N.C. 28201

Type 16 AN

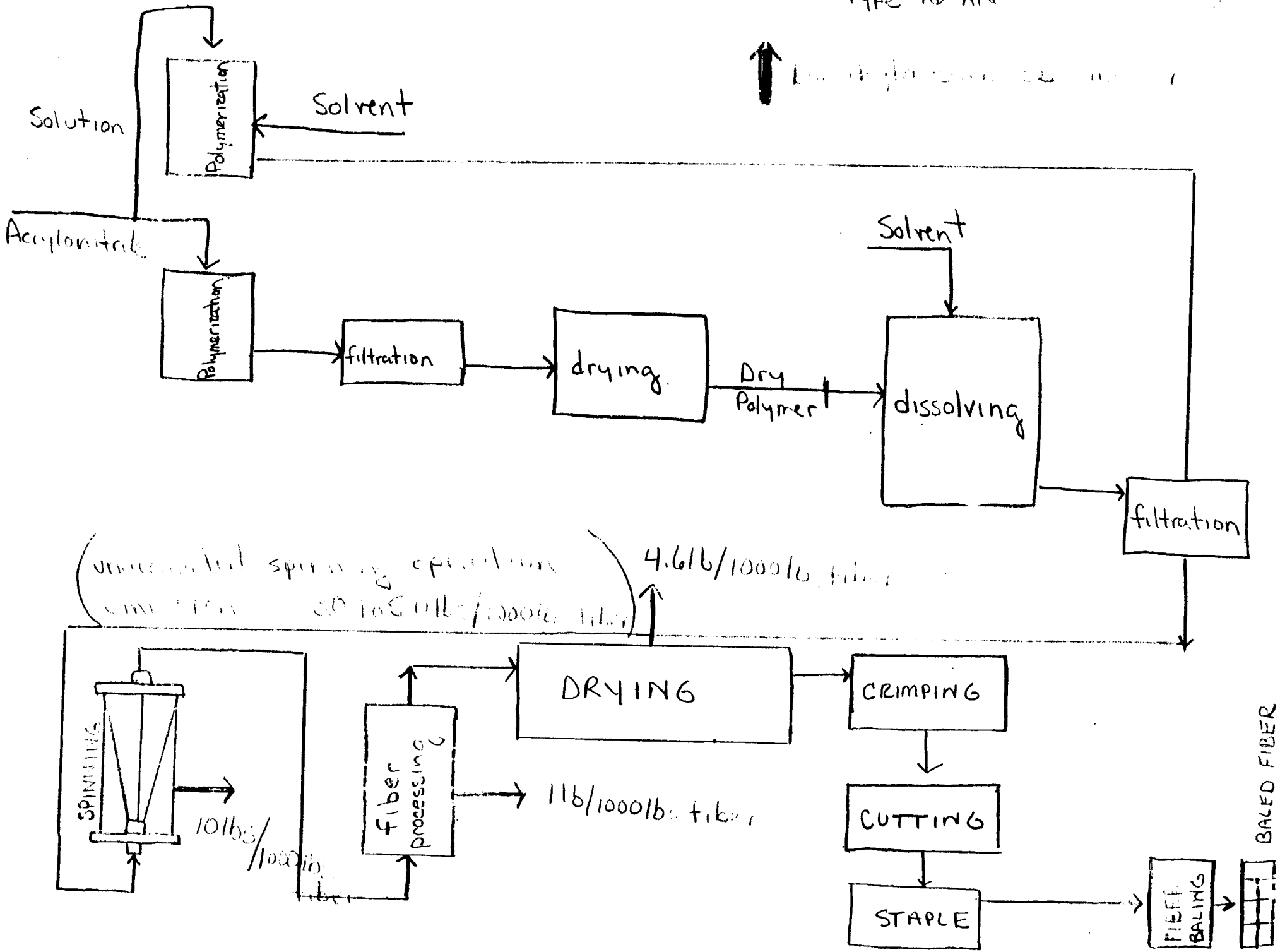
Solution
Polymerization
Solvent
Acrylonitrile
Polymerization
filtration
drying
Dry Polymer
Solvent
dissolving
filtration
4.6lb/1000lb fiber
SPINNING
10lbs/1000lb fiber
fiber processing
1lb/1000lb fiber
DRYING
CRIMPING
CUTTING
STAPLE
FIBER BALING
BALED FIBER