II. Process.

1. Process name.

Polymerization of Poly Vinyl Chloride (PVC)

2. Block diagram.

(See attached)

Polymerization of Vinyl Chloride

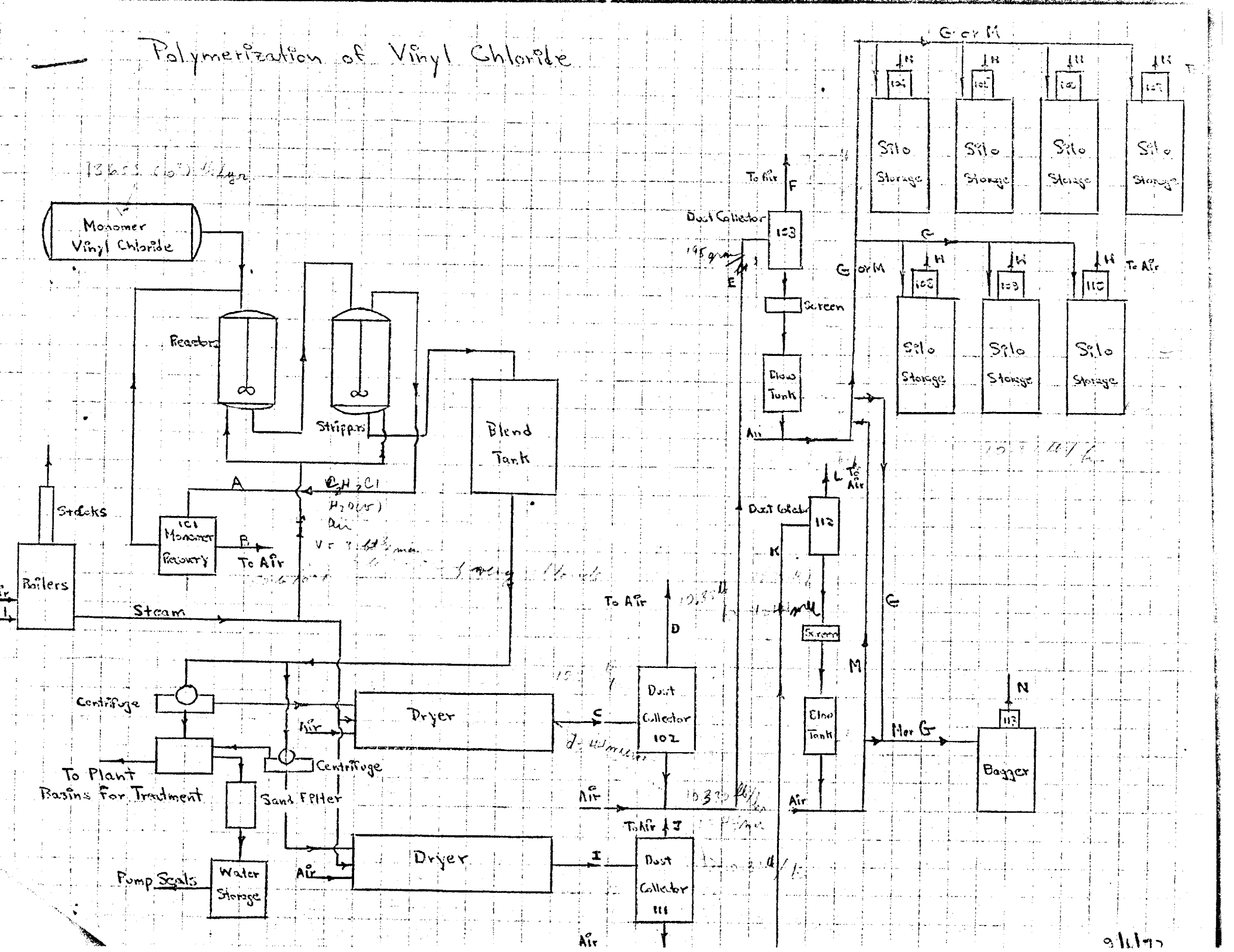

27

I. Capacity.

1. Process capacity. (not production)

90,000,000 pounds per year

Average 10,330 pounds per hour

2. Seasonal variation. (of production)

quarter	1	2	3	4	year total
%	30	25	20	25	100%

II. Process. (Continued)

3. Raw materials and products

Raw materials

Name	Quantity	Composition
Vinyl Chloride Monomer.	93,655,000 lb/yr.	99.9% Vinyl Chloride
Cellulosic Suspending Agents.	94,000 lb/yr.	100% cellulosic suspending agents.
Substituted fatty acids (Sorbital type).	177,000 lb/yr.	100% substituted fatty acids.
Ethylenediaminetetraacetic Acid Salt (EDTA SALT).	125,000 lb/yr.	38% EDTA SALT 62% Water
Copperas (Effluent treatment).	24,000 lb/yr.	100% $FeSO_4.7H_2O$
Aromatic Hydrocarbon.	49,000 lb/yr.	100% Aromatic hydrocarbon
Azo & Peroxypercarbonate type initiators.	26,000 lb/yr.	100% A & P type initiators
SiO_2 in Paraffinic hydrocarbons	29,000 lb/yr.	100% active

Product and by-products

Name	Quantity	Composition
Poly Vinyl Chloride	90,000,000 lb/yr.	99.5% Poly Vinyl Chloride

II. Process. (Continued)

4. Waste water.

Average of 100,000 gallons per day - Chemically treated
PH adjusted
Settled and pumped to
Town sewage treatment
plant.

5. Waste solids.

Waste solids are conveyed via the plant effluent to basins for treatment and settling at an estimated rate of 35 lbs per hour. As basins become full, they are cleaned out and material buried on the site.

After settling occurs we normally pump to the Town an average of 400-700 ppm total solids.

III. Emissions (composition and flow).

Six copies provided this section

Stream flow shown on block diagram by letter A.

1. Flow Unknown[a] Temperature 100°F Pressure 70 psig.

Component Name	Formula	State	Average amount or composition	Composition Range
Particulate	*	Solid		
Vinyl Chloride	C_2H_3Cl	Gas	50%	40 - 50
Water Vapor	H_2O	Gas	10%	10 - 20
Air	-	Gas	40%	40 - 50

[illegible]

* Particulate matter should be described as fully as possible. Does not apply.

[a] Estimate flow to represent 10% of total vinyl chloride recovered.

III. Continued For stream flow shown on block diagram by letter A.

2. Composition variation.

Variation results from opening and closing of vessels to which the system is connected.

3. Production rate during sampling.

Does not apply.

4. Method used to determine composition and flow.

Engineering estimate for composition - flow unknown.

III. Continued For stream flow shown on block diagram by letter A :

5. Sampling procedure.

Never sampled.

6. Analytical procedure.

[illegible].

7. Sampling frequency.

See 5f - Does not apply.

III. Continued For stream flow shown on block diagram by letter _____.

8. Confidence level.

Educated guess.

9. Ease of sampling.

[illegible]

[illegible] 10. Odor problem. (Circle yes or no or mark "not applicable")

Is the odor of this emission ever detectable at ground level on the plant property? Yes/no Off the plant property? Yes/no If odors carry beyond the plant property are they detectable infrequently? Yes/no Frequently? Yes/no Have you received a community odor complaint traceable to this source in the past year? Yes/no Has the odorous material been chemically identified? Yes/no What is it? _____

.90

Density of VC
0.0807 lb/ft

Six copies provided this section

d_{VC} = .073

III. Emissions (composition and flow).

Stream flow shown on block diagram by letter [illegible].

1. Flow [illegible] Temperature [illegible] Pressure [illegible].

Component Name	Formula	State	Average amount or composition	Composition Range
Particulate	*	Solid		
Vi[illegible] Chloride [illegible] CH_2		[illegible]	30%	5-35% by volume
Air		[illegible]	70%	65-95% by volume

[illegible] (.9) [illegible] of vinyl chloride

d^1 = .073 lb/ft

[illegible] .073 lb/ft (.9) [illegible] .0657 lb/min [illegible] 5.13 lb/hr

[illegible] = [illegible] lb/hr

* Particulate matter should be described as fully as possible. Does not apply.

$$E.F. = \frac{5.13}{10.[illegible]} \left| \frac{2\ lb\ (10^3)}{T} \right. = \frac{10.25}{10^3}$$

1.00 lb of vinyl chloride / T of [illegible]

1 Handbook of chemistry, range, 10th [illegible] 738

III. Continued For stream flow shown on block diagram by letter [illegible].

5. Sampling procedure.

Standard orsat procedure using xylene.

6. Analytical procedure.

[illegible]

7. Sampling frequency.

Initially [illegible] times per month [illegible] upon startup; now only [illegible] finalest [illegible] venting. [illegible] minute average. Note - venting is not con- [illegible] per minute.

III. Continued For stream flow shown on block diagram by letter B.

2. Composition variation.

Due to variation in feed stream to recovery system. See Stream A.

3. Production rate during samplers.

[illegible]

4. Method used to determine composition and flow.

Orsat & Rotameter.

III. Continued. Flow stream flow shown on block diagram by letter R

8. Confidence level.

± 5%

9. Base of [illegible].

[illegible] available.

10. Odor problem. (Circle yes or no or mark "not applicable")

Is the [illegible] of this emission ever detectable at ground level on the plant property? Yes/no Off the plant property? Yes/no

If odors carry beyond the plant property are they detectable infrequently? Not applicable Yes/no frequently? Yes/no have you received a community odor complaint traceable to this source in the past year? Yes/no Has the odorous material been chemically identified? Yes/no What is it? Does not apply.

III. Emissions (composition and flow).

Six copies provided this section

Stream flow shown on block diagram by letter C.

1. Flow [illegible] 000 ft³ Temperature 160°F Pressure [illegible] inches of H_2O
[illegible] min.

Component Name	Formula	State	Average amount or composition	Composition Range
Poly Vinyl Chloride	$(C_2H_3Cl)_2$	Solid	10,[illegible] lb/hr.	7-12,000 lb/hr.
Particulate	*	Solid		
Air	-	Gas	[illegible] ft³/min	Does not apply.

* Particulate matter should be described as fully as possible Poly Vinyl Chloride resin powder - 100 [illegible]

III. Continued For stream flow shown on block diagram by letter C.

2. Composition variation.

Production requirements include a variation in composition (i.e. production rate).

3. [illegible]

[illegible]

4. Method used to determine composition and flow.

[illegible] specifications and equipment [illegible].

III. Continued For stream flow shown on block diagram by letter ___ C ___.

5. Sampling procedure.

Never sampled.

6. Analytical procedure.

[illegible]

7. Sampling frequency.

None.

III. Continued For stream flow shown on block diagram by letter C

8. Confidence level.

± 10%

9. Ease of sampling.

No sample taps are readily available.

NOT APPLICABLE. 10. Odor [illegible]. (Circle yes or no or mark "not applicable")

Is the odor of this emission ever detectable at ground level on the plant property? Yes/no Off the plant property? Yes/no If odors carry beyond the plant property are they detectable infrequently? Yes/no Frequently? Yes/no Have you received a community odor complaint traceable to this source in the past year? Yes/no Has the odorous material been chemically identified? Yes/no What is it? _____

III. Water Long (composition and flow).

Six copies provided this section

Stream flow shown on block diagram by letters [illegible].

1. Flow [illegible] Temperature 110°F Pressure [illegible] of water.

Constituent	Formula	State	Average amount as composition	Composition Range
Polyphosphate	[illegible]	[illegible]	[illegible]	[illegible]
Precipitate	*	Solid		
[illegible]	-	[illegible]	5,000 [illegible]/min.	-

2. [illegible] should be described as fully as possible. See description for C Stream on [illegible].

[illegible] for [illegible] Only [illegible] on [illegible] diagram by [illegible]

[illegible] [illegible]tion.

See [illegible] for [illegible]

[illegible]

[illegible]

[illegible]

[illegible]

[illegible]

III. Continued: For process flow shown on block diagram by letter [illegible].

5. Sampling procedure.

[illegible] sampled.

6. Analytical procedure.

[illegible].

7. Sampling frequency.

[illegible].

III. Continued For stream flow shown on block diagram by letter E [illegible].

8. Confidence level.

± 10%

9. Cost of sampling.

No [illegible] available [illegible] is under a vacuum [illegible].

10. Odor [illegible]. (Circle yes or no or mark "not applicable")

[illegible]

Is the odor of this emission ever detectable at ground level on the plant property? Yes/no Off the plant property? Yes/no If odors carry beyond the plant property are they detectable infrequently? Yes/no Frequently? Yes/no Have you received a community odor complaint traceable to this source in the past year? Yes/no Has the odorous material been chemically identified? Yes/no What is it? _____

III. Emissions (composition and flow).

Six copies provided this section

Stream flow shown on block diagram by letter [illegible].

1. Flow [illegible] Temperature 160°F Pressure [illegible] of H_2O

Component	Formula	State	Average amount or composition	Composition Range
Poly Vinyl Chloride	$(C_2H_3Cl)_n$	[illegible]	[illegible]	.1%
Particulate	*	Solid		
	-	Gas	27,000 ft³/min.	

$$EF = \frac{10.3 \quad 1(10^3)}{10.[illegible] \ (10^3)} = 2 \text{ lb}/T \text{ of PVC.}$$

* Particulate matter should be described as fully as possible. Poly Vinyl Chloride resin .1% which is [illegible]

III. Continued: Part of cam flow shown on block diagram by letter _____

2. Composition variation.

Variation will be a function of rate (PVC) into collector.

3. Production rate during sampling.

Does not apply.

4. Method used to determine composition and flow.

Gas-liquid spaces.

III. Continued for stream flow shown on block diagram by letter _____.

5. Sampling procedure.

Only visual.

6. [illegible]

[illegible]

7. [illegible]

[illegible]

III. Continued. For stream flow shown on block diagram by letter D

8. Confidence level.

± 10%

9. Mode of sampling.

No [illegible] available - [illegible] makes sampling [illegible].

[illegible] 10. [illegible] (Circle yes or no or mark "not applicable")

Is the odor of this emission [illegible] detectable at ground level on the plant property? Yes/no Off the plant property? Yes/no If odors carry beyond the plant property are they detectable infrequently? Yes/no Frequently? Yes/no Have you received a community odor complaint traceable to this source in the past year? Yes/no Has the odorous material been chemically identified? Yes/no What is it? _____

III. Emissions (composition and flow).

Six copies provided this section

Stream flow shown on block diagram by letter [illegible].

1. Flow [illegible] Temperature [illegible] Pressure [illegible] inches of water.

Component	Formula	State	Average amount or composition	Composition Range
Poly [illegible] Dolomite	$(C_2H_3Cl)_n$	Solid	[illegible]	[illegible]
Pentaerylate	*	Solid	[illegible]	
[illegible]		Gas	[illegible]	-

[illegible]

A [illegible] matter should be described as fully as possible. [illegible]

III. Continued For stream flow above or block diagram by [illegible]

2. Composition variation.

See explanation for Stream C.

3. [illegible]

[illegible]

4. [illegible]

[illegible]

III. Continued: For process flow shown on block diagram by letter [illegible]

5. Sampling procedure.

See Section B.

6. Analytical procedure.

[illegible]

7. Sampling frequency.

See Section B.

III. Continued. Per stream flow shown on block diagram by letter [illegible].

8. [illegible]

± 10[illegible]

9. [illegible]

[illegible] additional [illegible]

[illegible] 10. [illegible] yes or no or mark "not applicable")

[illegible] emission ever detectable at ground level on the plant property? Yes/no Off the plant property? Yes/no If [illegible] beyond the plant property are they detectable [illegible]? Yes/no Frequently? Yes/no Have you received a [illegible] odor complaint traceable to this source in the past [illegible]? Yes/no Has the odorous material been chemically identified? Yes/no What is it? _____

$$\frac{1}{2}\left(\frac{3}{4}\right)^{n-1}$$

III. Continued. For air or flow sheet on block diagram by Letter G.

2. Composition variation.

See explanation Stream C.

3. Production [illegible].

Never sampled.

4. Method used to [illegible] composition and flow.

Engineering specifications.

III. Conclusion for survey flow scope on block diagram by letter [illegible].

5. Sampling procedure.

Never sampled.

6. [illegible]

[illegible]

7. [illegible]

None - [illegible]

III. Continued. [illegible] flow shown on block diagram by letter [illegible]

8. Confidence level.

± 10%

9. Rate of [illegible]

[illegible]

10. [illegible] (Circle yes or no or [illegible] "not applicable")

[illegible] Is [illegible] on the [illegible] Yes/no [illegible] If odors carry beyond the plant property are they detectable infrequently? Yes/no Frequently? Yes/no Have you received a community odor complaint [illegible] in the past year? Yes/no Has the odorous material been chemically identified? Yes/no That is it? _____

III. Continued. For [illegible] flow shown on [illegible]

2. [illegible]

See stream D.

3. [illegible]

[illegible]

4. [illegible]

[illegible]

III. Continued for stream flow shown on block diagram by letter [illegible]

8. Confidence [illegible]

± 10%

9. [illegible]

[illegible]

10. [illegible]

[illegible]

III. [illegible] (composition and flow).

[illegible] flow shown on block diagram by [illegible] I.

[illegible] Temperature [illegible] Pressure [illegible] of water.

Component	Formula	Phase	Average amount or composition	Composition Range
[illegible] Chloride	$(C_4H_9Cl)_4$	[illegible]	[illegible] lb/hr.	7-12,000 lb/hr.
[illegible]	[illegible]	[illegible]		
[illegible]		[illegible]	[illegible] ft^3/min.	

[illegible] should be [illegible] possible. [illegible]

[illegible]

2. [illegible]

[illegible]

3. [illegible]

[illegible]

4. [illegible]

[illegible]

5. [illegible]

Never [illegible].

6. [illegible]

[illegible].

7. [illegible]

[illegible]

III. Continued. [illegible] flow shown on [illegible] diagram by letter [illegible]

9. Confidence level.

± 10%

[illegible]

[illegible]

10. [illegible]

[illegible]

[illegible]

2. [illegible]

See [illegible]

3. [illegible]

See [illegible]

4. [illegible]

See [illegible]

[illegible]

5. [illegible]

[illegible]

[illegible]

7. [illegible]

[illegible]

[illegible] Confidence [illegible] flow [illegible] on [illegible] by letter_____.

8. Confidence level.

± 10%

9. [illegible]

[illegible]

10. [illegible] Is the odor of this [illegible] at ground level on the plant property? Yes/no. Off the plant property? Yes/no. If odors carry beyond the plant property are they detectable [illegible]? Yes/no. Frequently? Yes/no. Have you received a community [illegible] source in [illegible]? Yes/no. Has the odorous material been [illegible]? Yes/no. That is 1st_____

[illegible]

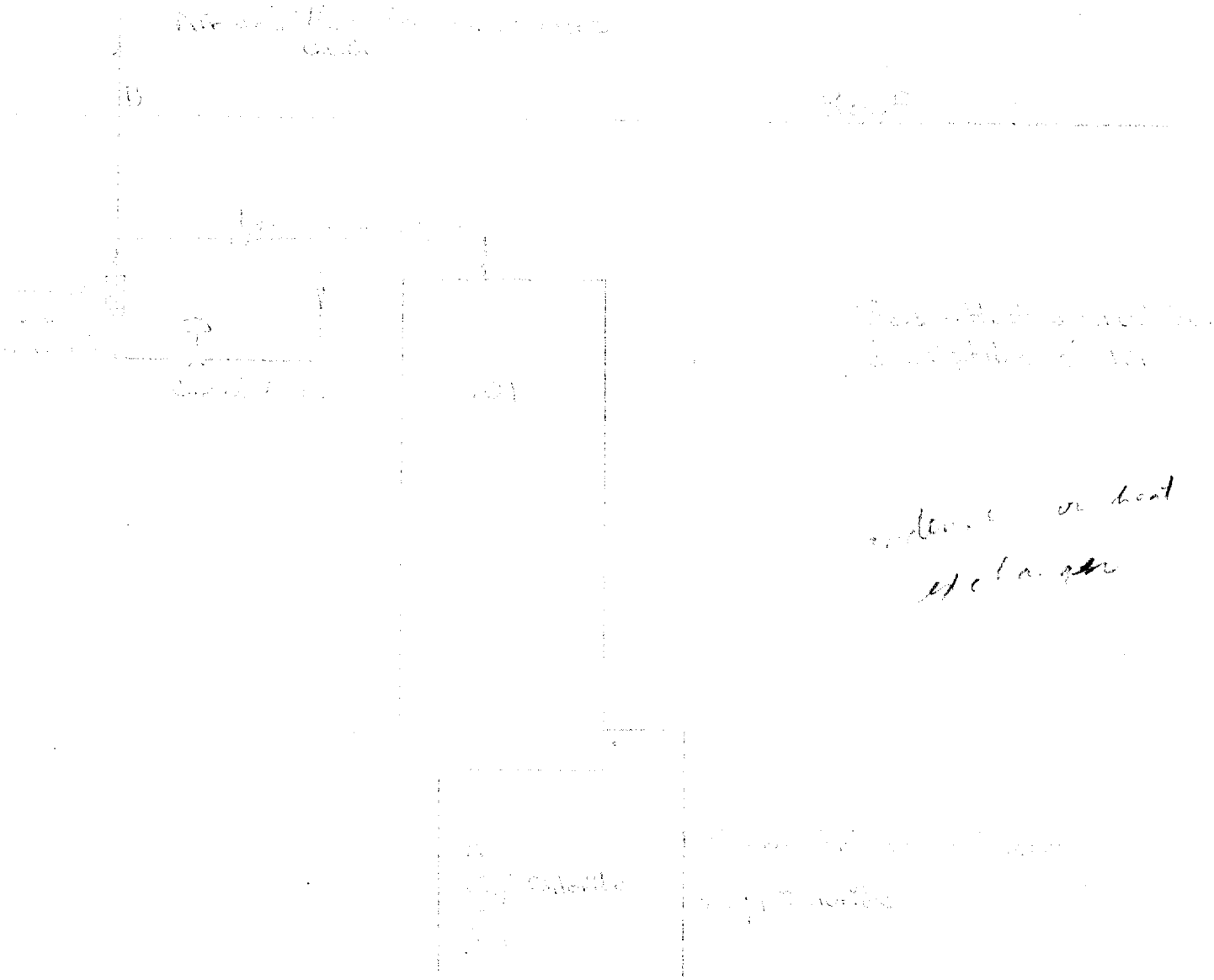

Condenser or heat exchanger

873 lb/hr
850 lb/hr

62.5

100 °F
50 °F

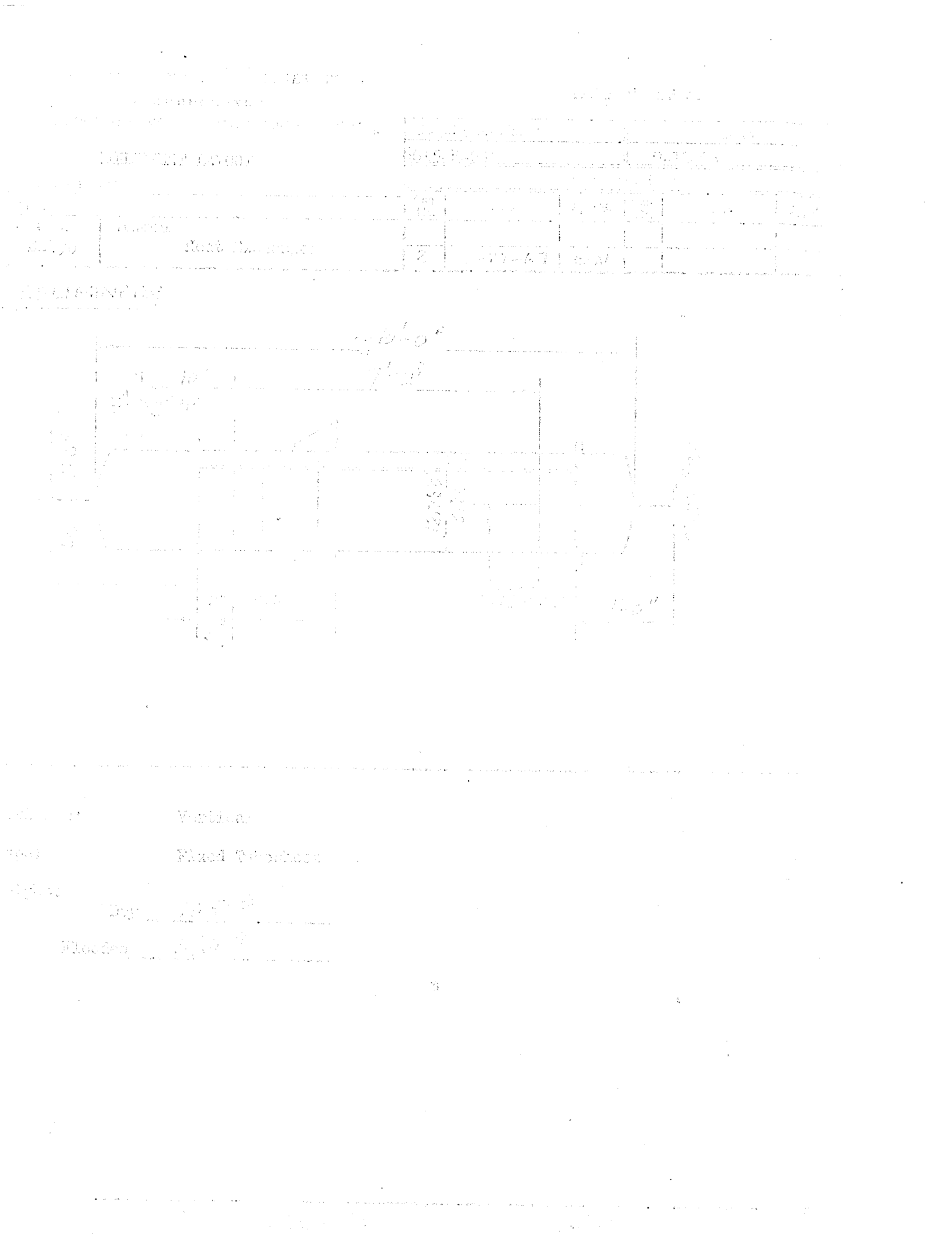

195