Note: This is a reference cited in *AP 42, Compilation of Air Pollutant Emission Factors, Volume I Stationary Point and Area Sources.* AP42 is located on the EPA web site at www.epa.gov/ttn/chief/ap42/

The file name refers to the reference number, the AP42 chapter and section. The file name "ref02_c01s02.pdf" would mean the reference is from AP42 chapter 1 section 2. The reference may be from a previous version of the section and no longer cited. The primary source should always be checked.

POLYSTYRENE
AP-42
Section 5.13.3
Reference Number
12

A-82-19
II-D-84

ARCO Chemical Company
Frankfort Road
Monaca, Pennsylvania 15061
Telephone 412 774 1000

K. Fitzpatrick
Plant Manager

February 18, 1983

Mr. Don R. Goodwin, Director
Emission Standards and Engineering Division
U. S. Environmental Protection Agency
Office of Air Quality Planning and Standards
Research Triangle Park, North Carolina 27711

Re: Response to EPA Request for Information -
Expandable Polystyrene
ARCO Chemical Company
Beaver Valley Plant

Dear Mr. Goodwin:

Attached is our response to your December 16, 1982 letter requesting information on ARCO Chemical Company's expandable polystyrene manufacturing facilities. Due to the holiday season and a concurrent request for information from another EPA office, we were unable to provide the requested information by January 15, 1983. Mr. Edwin Vincent was contacted and agreed to an extension of the submittal date.

ARCO Chemical Company considers some of the information being provided to be confidential and not for public disclosure. Pages of our response containing this information have been clearly marked "Confidential" and are enclosed in a separate sealed envelope. Should the U. S. Environmental Protection Agency propose to release information deemed confidential, we request that prompt written notice be provided to the party listed below so that necessary steps can be taken to support our claim of confidentiality (40 CFR Section 2.204(3)(4)).

Atlantic Richfield Company
1500 Market Street
Room 2009X
Philadelphia, Pennsylvania 19103

Attn: Mr. Blucher S. Tharp

Mr. Tharp can be contacted at (215) 557-2363; in his absence ask for the Freedom of Information Act attorney at the same telphone number.

Should you have any questions regarding our response, please contact Mr. Michael H. Reiners at (412) 774-1000, extension 614.

Very truly yours,

K. Fitzpatrick
Plant Manager

Response to EPA Request for Information[1]
Polymers and Resins Processing
Expandable Polystyrene

A. General Information

1. Polymer name and type(s)

   This facility produces primarily expandable polystyrene with a limited quantity of crystal polystyrene.

2. Company's name, location of the plant

   ARCO Chemical Company
   Division of Atlantic Richfield Company
   Beaver Valley Plant
   Frankfort Road
   Monaca, Pennsylvania 15061

3. Company contact for additional information including mailing address and telephone number

   Mr. Michael H. Reiners
   Environmental Engineer
   ARCO Chemical Company
   Beaver Valley Plant
   Frankfort Road
   Monaca, Pennsylvania 15061

   (412) 774-1000, extension 614

4. Date "Request for Information" completed

   February 15, 1983

B. Overall Process Information

1. Process capacity (not production rate), state seasonal variation, if any. Indicate relative capacity devoted to production of expandable, crystal and impact polystyrene. If this varies, give a typical distribution or range that would be expected over the next five years.

   Process capacity at the Beaver Valley plant is approximately [*] million pounds/year of expandable polystyrene with the current product mix specified by Marketing. At capacity operation, about [*] million pounds per year of crystal polystyrene would be produced. Very little impact polystyrene is produced; the quantity of impact polystyrene that can be produced is included with the above cited annual production rate for crystal polystyrene.

---

1 This response follows the format of informational request, Enclosure 1, attached to the December 16, 1982 letter from the U. S. Environmental Protection Agency, Emission Standards and Engineering Division. Confidential information, deleted from this copy of our response, has been identified by an asterisk.

B. Overall Process Information (continued)

Review of historic production data indicates some seasonal variation with production being greater in the first quarter. However, the seasonal variation is not significant. It is difficult to project the seasonal variation five years into the future since production is dependent on competitive activity and consumer demand.

2. Process name and type

Process developed by ARCO Chemical Company; process type is suspension polymerization of styrene monomer.

Expandable polystyrene is produced by impregnating with an expanding agent previously polymerized polystyrene.

3. Overall process block diagram with emission points, control devices, and brief description of process (Indicate how these vary when crystal and impact polystyrene are produced).

a) Overall Process Block Diagram - See Attachments 1 and 2.

b) Brief Process Description

Polystyrene is produced at the Beaver Valley Plant using standard suspension polymerization technology that has been extensively reported in technical literature. Water and styrene monomer are charged into an agitated batch reaction vessel and polymerized to form polystyrene. The styrene transfer operation will result in styrene emissions from the reactor (EP-1).

The reactor product is a slurry of polystyrene spheres (beads) in water. After acidification in a holding tank, the beads are dewatered and dried. Dry air is admitted at the bottom of the dryer and exits at the top. The air then passes through two cyclone separators in series before discharging to the atmosphere. The dried beads are pneumatically conveyed from the dryer, classified, and sent to storage. The pneumatic conveying system is equipped with a cyclone and a bag filter designed to remove fines. Design efficiency of the cyclone-bag filter system is 99.9%; particulate emissions to the atmosphere are insignificant.

Prime product is subsequently further processed into expandable polystyrene. At the Beaver Valley Plant, crystal (and a small quantity of impact polystyrene) polystyrene is produced from polystyrene beads that do not meet specified criteria for further processing into expandable polystyrene. Depending on sales requirements, additional polystyrene beads can be allocated to this end use.

B. Overall Process Information (continued)

b) Brief Process Description (continued)

Crystal polystyrene is produced by blending polystyrene beads and additives followed by extrusion and pelletizing (See Attachment 1).

Expandable polystyrene is produced from polystyrene beads meeting certain quality criteria. The beads from the storage tank are pneumatically conveyed to an agitated reactor containing water. As previously described, fines from the transfer operation are removed by a cyclone and bag filter. A hydrocarbon blowing agent is then added to the reactor. After impregnation, the bead/water slurry is transferred to a holding tank and acid is added. The slurry is then washed with water, dewatered, and dried. The dryer is equipped with cyclones to remove particulate matter from the exhaust air. The dried expandable polystyrene beads are pneumatically conveyed to storage vessels for packaging. As with previously described transfer systems, a cyclone and bag filter are employed to reduce particulate emissions prior to discharge of the conveying air.

4. Number of pumps, compressors and valves which handle volatile organic compounds (VOC). Indicate any variance when crystal and impact polystyrenes are produced. (Typical Process as shown in Attachments 1 & 2).

Pumps	No.	Service
Styrene Feed	2	Transfer styrene monomer to reactor
Blowing Agent	2	Transfer of blowing agent to reactor
Valves	8	Liquid VOC's
Compressors	0	

C. Polymerization Process (Indicate how your response differs when crystal and impact polystyrene are produced).

1. Process flow sheet for the polymerization with emission points shown. Specify the expanding agent and show where it is introduced into the process.

Attachment 1 depicts the suspension polymerization of styrene monomer at the ARCO Chemical Company, Beaver Valley Plant. Emission points for VOC's and particulate matter are shown. This section of the process is common for production of polystyrene beads for either expandable or crystal polystyrene.

C. Polymerization Process (continued)

Attachment 2 depicts the production of expandable polystyrene from polymerized styrene monomer shown in Attachment 1. Emission points for VOC's and particulate matter are shown. The expanding agent, [*], is added to the reactor as indicated on the diagram.

2. Emissions (identify if continuous or intermittent flow, composition, and flow rate from the polymerization section). Specify temperature and pressure of the streams. Also, for intermittent streams, indicate frequency and average duration of each emission occurrence. If exact composition of the stream is not known, please give representative molecular weight. Volatile organic compounds (VOC) should be identified as fully as possible.

See Tables 1 and 2 for estimated process emissions. Table 1 is a summary of available emissions information from the polymerization section of the process and corresponds to process flows depicted in Attachment 1. Tables 2 and 2(a) are a summary of available emission information from the production of expandable polystyrene and corresponds to process flows depicted in Attachment 2.

Polystyrene Manufacture (Polymerization)

The Beaver Valley Plant operates several trains (batch processes) of varying capacity. The primary VOC emission source in the polymerization section of the process (See Attachment 1 and Table 1) is the reactor vent. Styrene emissions occur when the reactor is being filled with styrene monomer. The vapor being emitted is at ambient temperature; emission only occurs when reactor is being filled.

Minor quantities of particulate emissions occur from the control devices shown in Attachment 1. The emissions are essentially spent air that was used to pneumatically convey polystyrene beads through the process steps. Particulate emissions from all sources at capacity operation are estimated (by calculation) to be less than one ton/year.

Expandable Polystyrene Manufacture

Expandable polystyrene is manufactured at the Beaver Valley plant in several trains with varying production capacities. Definitive emission estimates from each specific point source have not been developed and thus are not available for this survey response. To provide a response to EPA's request, we have estimated emissions from a "typical" ARCO Chemical Company expandable polystyrene manufacturing unit. Emission estimates from each point source are summarized in Tables 2 and 2(a). Particulate emissions from the pneumatic conveying systems are insignificant (about 3 to 5 tons/year

Expandable Polystyrene Manufacture (continued)

based on design data). Detailed estimates of particulate emissions from each point source have not been included in this response since: a) total particulate emissions are negligible and b) the emphasis of the questionnaire appears to be VOC emissions.

Since the process used by ARCO Chemical Company uses both batch and continuous processing unit operations, it is difficult to estimate total VOC losses by traditional methods. Based on internal product quality control information, estimated VOC losses from the expandable polystyrene process average 9.7 pounds VOC/1000 pounds of EPS.

3. Describe composition variation, if any.

Variation in mass emissions from specific point sources have not been quantified by stack sampling and as a result variation in composition and/or mass discharges cannot be reliably ascertained.

4. Method used to determine compositon and flow, state accuracy level.

Composition (VOC) estimated by calculation. Design air flow rates from the pneumatic conveying system and product quality control information (eg., "volatiles" content of the polystyrene beads) were used to calculate reported average composition values and mass emission rates. Accuracy level of the individual point source mass emission rates is unknown since no stack sampling has been conducted to obtain actual emission data to compare to calculated values.

Based on routine quality control information, we have estimated that VOC losses from the expandable polystyrene process average 9.7 pounds VOC/1000 pounds of EPS. Since this is based on material balance considerations, we believe that this emission factor can be used to reliably estimate total VOC emissions from the ARCO Chemical Company EPS process.

5. Sample procedure, ease of sampling, analytical procedure, if any.

Emission points are generally inaccessible and no sample ports are available for velocity traverses or extraction of samples. No reliable stack sampling has been conducted on these units using EPA or PaDER test protocols.

D. Materials Recovery/Separation Process (Indicate how your response differs when crystal and impact polystyrene are produced).

1. Process flow sheet for the materials recovery/separation section with emission points shown.

   There are no solvent recovery, decanting, catalyst drying, diluent recovery, etc. operations associated with ARCO Chemical Company's polystyrene polymerization or expandable polystyrene manufacturing processes.

2. Emissions (composition and flow) from the material recovery/separation section.

   Not applicable.

3. Describe composition variation, if any.

   Not applicable.

4. Method used to determine composition and flow, state accuracy level.

   Not applicable.

5. Sample procedure, ease of sampling, analytical procedure, if any.

   Not applicable.

E. Engineering Description of Control Devices Specified in B.3.

1. Please include sketches, dimensions, operating conditions and capital and operating costs of the control devices, such as a flare, boiler, incinerator or condenser.

   The ARCO Chemical Company expandable polystyrene manufacturing process does not use a flare, boiler, incinerator or condenser for VOC emission control. Cyclones shown on Attachments 1 and 2 are used primarily to remove solids from the conveying air. Fabric filters are designed to remove 99.9% of particulate in the air stream from the airveying cyclones. Estimated carryover from the airveying cyclones is about one pound particulate/hour.

TABLE 1

EMISSION ESTIMATES - SUSPENSION POLYMERIZATION OF STYRENE MONOMER AND PRODUCTION OF CRYSTAL POLYSTYRENE

Emission Point [1]	Description [1]	Continuous or Intermittent	Composition
EP-1	Reactor Vent	I	78% Water Vapor (2) 22% Styrene
EP-2	Holding Tank Vent	I	TRACE VOC, Acidity Present in Exhaust Air
EP-3	Dewatering and Drying System Vent	C	TRACE - Particulate Matter (3)
EP-4	Storage Silo Vent	I	TRACE - Particulate Matter (3)
EP-5	Storage Silo Vent	I	TRACE - Particulate Matter (3)
EP-6	Storage Silo Vent	I	TRACE - Particulate Matter (3)

Notes: (1) Emission points correspond with locations shown on Attachment 1.

(2) Estimated reactor fill losses based on vapor pressure of styrene. This calculated composition is equivalent to about 0.027 lbs. styrene emitted per 1000 pounds styrene transferred.

(3) Particulate emissions from the control devices, estimated solely from design information, are believed to be less than one ton/year from all sources. Stack sampling has not been conducted at any source.

TABLE 2

EMISSION ESTIMATES - PRODUCTION OF EXPANDABLE POLYSTYRENE

Emission Point [1]	Description [1]	Continuous or Intermittent	Contaminant	Tons/Year
EP-7	Bag Filter Vent	I	PM	0.04
EP-8	Reactor Vent	I	VOC	NEG(2)
EP-9	Holding Tank Vent	I	VOC	143
EP-10	Washing and Dewatering System Vent	C	VOC	57
EP-11	Dryer Vent	C	VOC	24
EP-12	Storage Silo Vent	C	PM	0.04
EP-13	Storage Silo Vent	C	VOC	85
EP-14	Packaging System Losses	I	VOC	56
EP-15	Blowing Agent Tank Vent	I	VOC	0.008

Note: (1) Emission points correspond with locations shown on Attachment 2.

(2) Reactor contents are transferred to holding after impregnation. Only VOC that remains in vapor space of reactor can be potentially emitted.

TABLE 2 (a)

SUMMARY OF VOC EMISSIONS - EXPANDABLE POLYSTYRENE MANUFACTURE

Emission Point [1]	VOC Emissions (calculated) Tons/Yr	LBS/Hour	PPMV	Temp, °F
EP-8	Negl.(2)	Negl.(2)	--	
EP-9	143	245	4860	Ambient
EP-10	57	15.3	456	ambient
EP-11	24	6.5	73	ambient (4)
EP-13	85	23.0	685	ambient
EP-14	56	15.0(5)	447	ambient
EP-15	0.008	Negl.(3)		

Notes: (1) Emission Points are shown on Attachment 2 and identified by source in Table 2.

(2) Reactor contents are transferred to holding tank after impregnation prior to venting reactor. The only VOC that remains in the reactor vapor space can be potentially emitted.

(3) Intermittent Flow

(4) Dryer exhaust air temperature is slightly above or at ambient temperature depending on grade of EPS being processed. Ambient temperature has been used for calculation purposes.

(5) Includes estimated non-point source fugitive emissions (eg., loss of blowing agent from impregnated beads) from packaging operation.

ATTACHMENT 1

BLOCK FLOW DIAGRAM – SUSPENSION POLYMERIZATION OF STYRENE MONOMER AND PRODUCTION OF CRYSTAL POLYSTYRENE

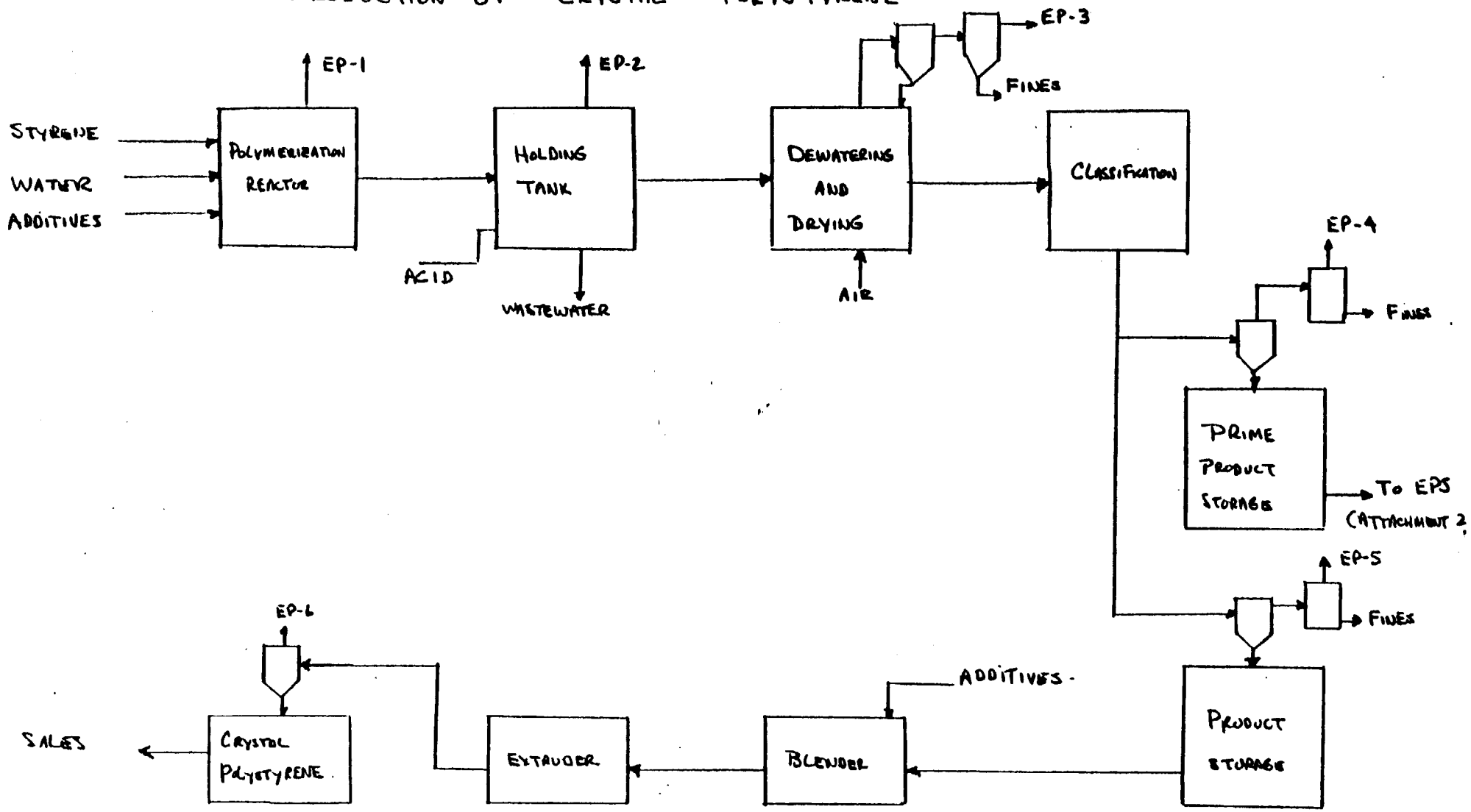

ARCO CHEMICAL Co
BEAVER VALLEY PLANT

DRF 2/83

ATTACHMENT 2

BLOCK FLOW DIAGRAM – PRODUCTION OF EXPANDABLE POLYSTYRENE (EPS)

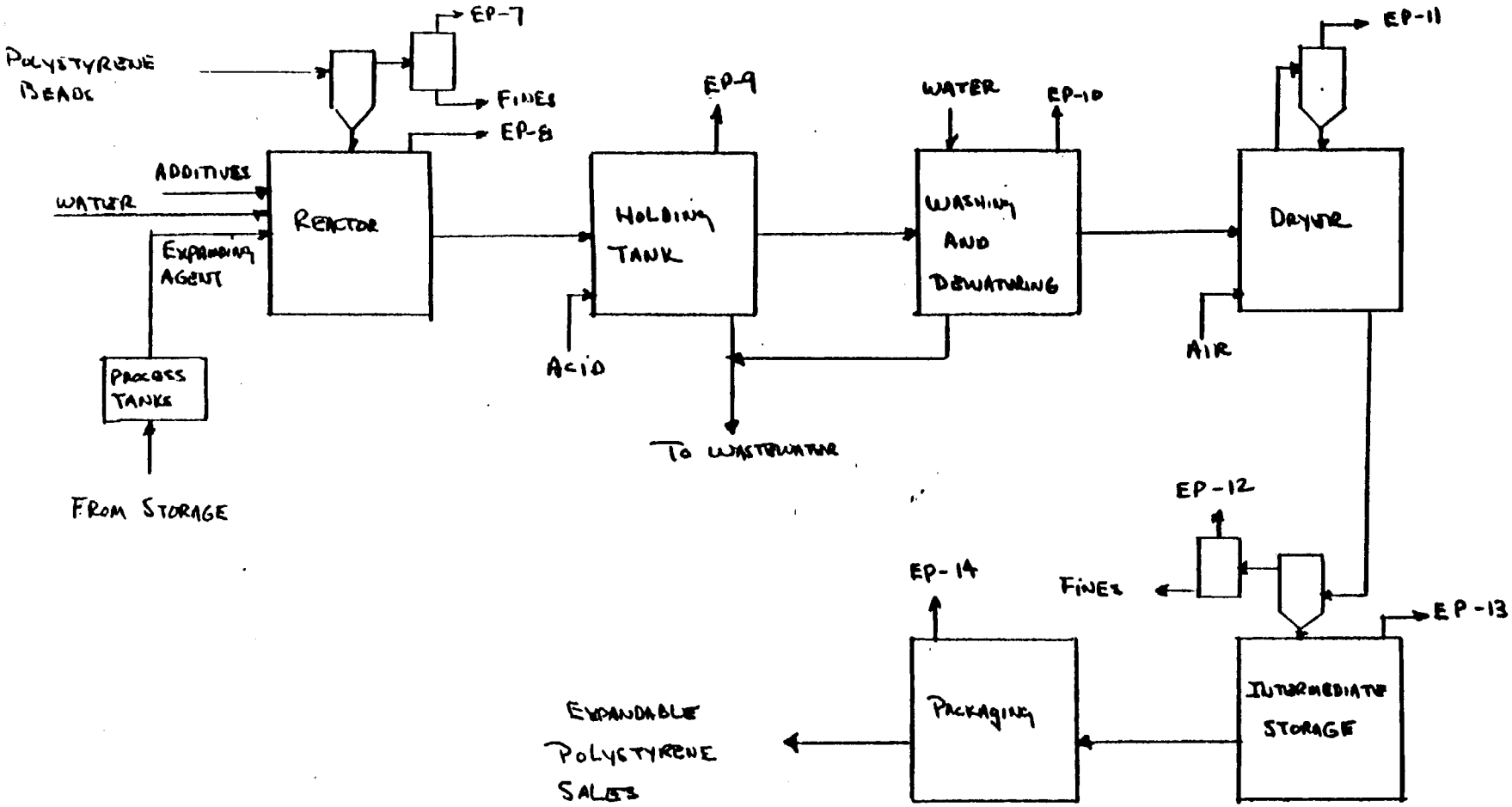

BASIS: 75,000,000 LBS/YR EPS
310 DAYS/YR OPERATION
(TYPICAL PRODUCTION UNIT)

ARCO CHEMICAL COMPANY
BEAVER VALLEY PLANT
DRF 2/83