Note: This is a reference cited in *AP 42, Compilation of Air Pollutant Emission Factors, Volume I Stationary Point and Area Sources.* AP42 is located on the EPA web site at www.epa.gov/ttn/chief/ap42/

The file name refers to the reference number, the AP42 chapter and section. The file name "ref02_c01s02.pdf" would mean the reference is from AP42 chapter 1 section 2. The reference may be from a previous version of the section and no longer cited. The primary source should always be checked.

SPE MONOGRAPHS

Injection Molding

Irvin I. Rubin

Nylon Plastics

Melvin I. Kohan

Introduction to Polymer Science and Technology: An SPE Textbook

Edited by Herman S. Kaufman and Joseph J. Falcetta

Principles of Polymer Processing

Zehev Tadmor and Costas G. Gogos

Coloring of Plastics

Edited by Thomas G. Webber

The Technology of Plasticizers

J. Kern Sears and Joseph R. Darby

Fundamental Principles of Polymeric Materials

Stephen L. Rosen

II-I-125

FUNDAMENTAL PRINCIPLES OF POLYMERIC MATERIALS

STEPHEN L. ROSEN

Professor and Chairman
Department of Chemical Engineering
The University of Toledo
Toledo, Ohio

A WILEY-INTERSCIENCE PUBLICATION

JOHN WILEY & SONS

New York · Chichester · Brisbane · Toronto · Singapore

POLYSTYRENE
AP-42
Section 5.13.3
Reference Number
11

polycondensations. This must be balanced against the cost of preparing the special monomers, like the acid chloride above, and the need to separate and recycle solvents and unreacted monomers.

13.4 SUSPENSION, BEAD, OR PEARL POLYMERIZATION

In discussing bulk polymerization, it was mentioned that one of the ways of facilitating heat removal was to keep one dimension of the reaction mass small. This is carried to its logical extreme in suspension polymerization by suspending the monomer in the form of droplets 0.01 to 1 mm in diameter in an inert, non-solvent liquid (almost always water). In this way, each droplet becomes a single bulk reactor, but with dimensions small enough so that heat removal is no problem and the heat can easily be soaked up by and removed from the low-viscosity, inert suspension medium.

An important characteristic of these systems is that the suspensions are *thermodynamically unstable* and must be maintained with agitation and suspending agents. A typical charge might consist of

monomer (water insoluble)
initiator (monomer soluble) } monomer phase
chain-transfer agent (monomer soluble)
water
suspending agent – { protective colloid / insoluble inorganic salt

Two types of suspending agent are used. A "protective colloid" is a water-soluble polymer whose function is to increase the viscosity of the continuous water phase. This hydrodynamically hinders coalescence of monomer drops; but it is inert with regard to the polymerization. A finely divided insoluble inorganic salt such as $MgCO_3$ may also be used. It collects at the droplet–water interface by surface tension and prevents coalescence of the drops upon collision. A pH buffer is sometimes also used to help stability.

The monomer phase is suspended in the water at about a ½ to ¼ monomer/water volume ratio. The reactor is purged with nitrogen and heated to start the reaction. Once the reaction is under way, temperature control in the reactor is facilitated by the added heat capacity of the water, the low viscosity of the reaction mass – essentially that of the continuous phase – allowing easy heat removal through a jacket.

The size of the product beads depends on the strength of agitation, as well as on the nature of the monomer and suspending system. Between about 20% and 70% conversion, *agitation is extremely critical.* Below 20% the organic phase is still fluid enough to redisperse, and above 70% the particles are rigid enough to

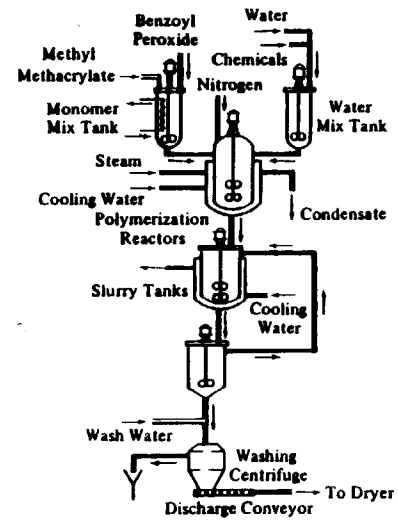

Figure 13.4 Suspension polymerization of methyl methacrylate. Excerpted by special permission from CHEMICAL ENGINEERING, June 6, 1966. Copyright (C) 1966 by McGraw-Hill, Inc., New York, N.Y. 10036.

prevent agglomeration; but if agitation stops or weakens between these limits, the sticky particles will coalesce or agglomerate in a large mass and finish polymerization that way. Again quoting Schildknecht[10] "After such uncontrollable polymerization is completed in an enormous lump, it may be necessary to resort to a compressed air drill or other mining tools to salvage the polymerization equipment."

Since any flow system is bound to have some relatively stagnant corners, it has been impractical to run suspension polymerization continuously. Figure 13.4[11] shows a typical process. The reactors are usually jacketed, stainless or glass-lined steel kettles of up to 30,000-gal capacity. The polymer beads are filtered or centrifuged and either water washed to remove the protective colloid or rinsed with a dilute acid to decompose the $MgCO_3$. The beads are quite easy to handle when wet, but they tend to pick up a static charge when dry, making them cling to each other and everything else. The beads can be molded directly, extruded and chopped to form molding "powder," or used as is, for example, as ion-exchange resins or the beads from which polystyrene foam cups and packing supports are made.

Ion-exchange resins are basically suspension beads of polystyrene crosslinked by copolymerization with a few percent divinyl benzene, which are then treated chemically to provide the necessary functionality. To reduce mass-transfer resistance in the ion-exchange process, an inert solvent may be incorporated in the organic suspension phase. When polymerization is complete, the solvent is

removed, leaving a highly porous bead with a large internal surface area (macroreticular). Foam beads are linear polystyrene containing an inert liquid blowing agent, usually pentane. The pentane may be added to the monomer prior to polymerization, but, more commonly, it is added to the reactor after polymerization and is absorbed by the polystyrene beads. When exposed to steam in a mold, the beads soften and are foamed and expanded by the volatilized blowing agent to form the familiar cups and other foam items.

The major advantages of suspension polymerization, then, are

1. Easy heat removal and control.
2. The polymer is obtained in a convenient, easily handled, and often directly useful form.

Disadvantages include:

1. Low yield per reactor volume.
2. A somewhat less pure polymer than from bulk polymerization, since there are bound to be remnants of the suspending agent(s) absorbed on the particle surface.
3. The inability to run the process continuously, although if several batch reactors are alternated, the process may be continuous from that point on.

13.5 EMULSION POLYMERIZATION

When the supply of natural rubber from the East was cut off by the Japanese in World War II, the United States was left without an essential material. The success of the Rubber Reserve Program in developing a suitable synthetic substitute and the facilities to produce it in the necessary quantities is one of the all-time outstanding accomplishments of chemists and engineers. The styrene–butadiene copolymer rubber GR-S (government rubber–styrene) or SBR (styrene–butadiene rubber) as it is now called (developed during the war) is still the most important synthetic rubber and is still produced, along with a variety of other polymers, largely by the emulsion polymerization process developed then.

The theory behind the emulsion reaction has been discussed in Chapter 10. A typical commercial process is shown in Fig. 13.5. The reactors are usually stainless or glass-lined steel tanks, similar to those used for suspension polymerization. In contrast to suspension polymerization, however, a proper emulsion is thermodynamically stable, and therefore emulsion polymerization can be run continuously. Newer processes often have several continuous stirred-tank reactors in series.

The product of an emulsion polymerization is a *latex*—polymer particles on

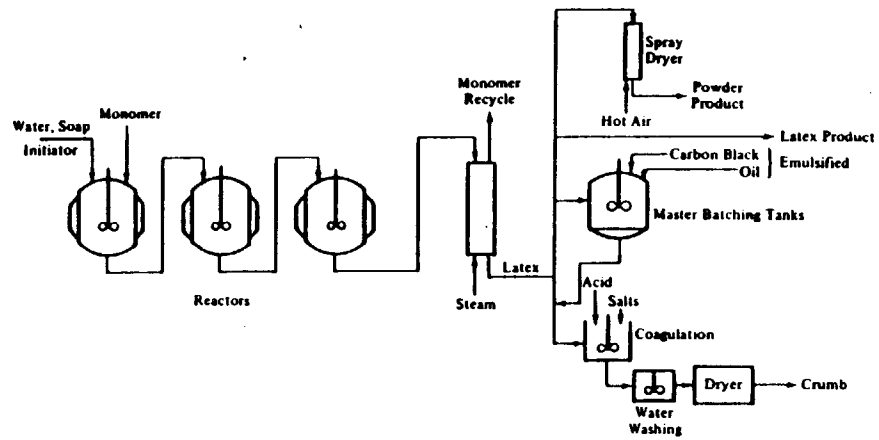

Figure 13.5 Emulsion polymerization process.

the order of 500 to 1500 Å (0.05 to 0.15 μm) stabilized by the soap. These latices are often important items of commerce in their own right. Two familiar examples are "white glue" and latex paints. The latter, also containing pigments and various agents to control application and film-forming characteristics, are water dispersable only as long as the latex is maintained. As soon as the water is evaporated and the water-insoluble polymer particles coalesce to form the paint film, you can no longer clean your brushes with water. Where the polymer must be mixed with other materials, the process of "*master batching*" sometimes allows this to be done conveniently and uniformly. In rubber technology, carbon black and oil are emulsified and mixed with the rubber latex, and then the whole works is coagulated together, giving a uniform and intimate dispersion of the additives in the rubber.

Not too long ago, it appeared that for many polymers, emulsion polymerization was rapidly losing ground to other polymerization processes. However, the increased recognition of possible adverse physiological effects of even small amounts of residual monomer suddenly makes emulsion polymerization look very attractive in certain applications. The extremely small size of the latex particles provides a very short diffusion path for the removal of small molecules from the polymer, by steam stripping, for example, permitting very low levels of residual monomer to be obtained.

For many applications the solid polymer must be recovered from the latex. The simplest method is spray drying, but since no attempt is made to remove the soap, the product is an extremely impure polymer. A latex may be "creamed" by adding a material that is at least a partial solvent for the polymer, acetone, for example. This makes the particles sticky and causes some agglomeration. The latex is then coagulated by adding an acid, sulfuric, for example, which converts