Note: This is a reference cited in *AP 42, Compilation of Air Pollutant Emission Factors, Volume I Stationary Point and Area Sources.* AP42 is located on the EPA web site at www.epa.gov/ttn/chief/ap42/

The file name refers to the reference number, the AP42 chapter and section. The file name "ref02_c01s02.pdf" would mean the reference is from AP42 chapter 1 section 2. The reference may be from a previous version of the section and no longer cited. The primary source should always be checked.

REPORT OF PLANT VISIT TO MONSANTO
PLASTICS AND RESINS COMPANY

Polystyrene Plant
Port Plastics, Ohio

Regarding the Development of New Source Performance Standards for the Polymers and Resins Industry (ESED Project No. 78/24)

I. PURPOSE

To view Monsanto's polystyrene operation from the standpoint of emissions control.

To exchange technical information on VOC emissions.

To review Monsanto's comments submitted on the draft BID and CTG documents.

II. PLACE AND DATE

Monsanto Plastics and Resins Company
Lower River Road (Route 50)
Port Plastics (Addyston) Ohio
September 15, 1982

III. ATTENDEES

Jim Berry, EPA/CPB

Ed Vincent, EPA/CPB

Ken Meardon, Pacific Environmental Services, Inc.

Jim Serne, Pacific Environmental Services, Inc.

Wally G. Bir, Engineering Group Consultant, St. Louis

Leo P. Paradis, Manager, Environmental Affairs, St. Louis

Ralph Becker, Superintendent, Technical Service Dept., Port Plastics

Joseph Galownia, Operating Superintendent, Port Plastics

David Krawczyk, Superintendent, Environmental Health, Safety and Medical, Port Plastics

James Sampson, General Manufacturing Superintendent, Plastics, Port Plastics

Bruce Korblick, Operating Supervisor, Port Plastics

IV. DISCUSSION

Leo Paradis opened the discussion with a brief review of the purpose of the visit. He noted that besides showing Monsanto's Port

Plastics polystyrene operation to EPA and PES and exchanging information on VOC emissions from the operations, Monsanto would review its comments on EPA's draft BID and CTG documents.

Each participant then introduced himself. Messrs. Leo Paradis and Wally Bir represented Monsanto's corporate offices in St. Louis, while the other Monsanto participants all are employed at the Port Plastics facility. Mr. Paradis reviewed the agenda for the visit which was agreeable to all participants. A copy of the visuals used by Mr. Paradis are provided as Attachment A.

Wally Bir provided a description of Monsanto's continuous CLAIMED CONFIDENTIAL process for manufacturing polystyrene. Lustrex^{R} is Monsanto's registered trademark for polystyrene. CLAIMED CONFIDENTIAL The advantages of the CLAIMED CONFIDENTIAL process were reviewed, including major reductions in vapor emissions, wastewater discharges and energy usage. Mr. Bir distributed a process flow chart which he explained and provided details. The flow chart and the other transparencies used by Mr. Bir are included in this plant visit report as Attachment B.

At the Port Plastics facility, Monsanto operates CLAIMED CONFIDENTIAL parallel lines manufacturing polystyrene (PS) from styrene monomer. Crystal polystyrene and rubber modified or high impact polystyrene (HIPS) can be produced. Each process line consists of multiple reactors in series. Operating temperatures range between 100 and 260°C, while pressures are near atmospheric. Actual reactor temperatures and corresponding pressures are selected to achieve predesignated product quality specifications. Given the reactor design parameters, the resultant styrene conversion in each reactor effluent stream can vary in keeping with product quality requirements.

Unreacted monomers and other organics are separated from the polymers by low pressure devolatilization. Devolatilization temperatures can be as high as 270°C at pressures as low as three Torr. Conventional polymer strand die and pelletizing operations follow.

All reactor vapors and devolatilizer vapor streams are condensed and recycled into the process. The non-condensable stream following the

condensation step flows to a multiple stage steam jet system. The inter-stage jet condensers are provided with liquid seals and flow into a vessel called the process organic trap. The non-condensable stream from the final stage condenser also flows to the vapor phase of the organic trap.

The water insoluble organic phase is separated from the water phase by an internal weir located in the trap. The organic phase is collected and burned as fuel.

The vapors from the process organic trap pass through a packed scrubber before discharge to the atmosphere. A low pressure drop medium is for packing and 2 to 5 GPM of water is used as a scrubbing fluid. The scrubber exhaust vent is about 8 inches in diameter.

The scrubber exhaust vent, tankage and die vents were tested for hydrocarbon emissions in 1975 by Pollution Control Science, Inc. A copy of the test report is included in this trip report as Attachment C. Mr. Bir compared the emission test results from this report with EPA's Draft CTG for Polystyrene,[a] CMA's comments on model plant emissions for continuous polystyrene process technology[b] (Attachment B No. 9). He noted that CMA-quoted emissions were 25 times lower than EPA's estimates while the Monsanto test report emissions -- acknowledged to be a snapshot in time -- were much lower than even the CMA data. EPA concurred that Monsanto process design would be expected to produce very low emissions as observed, and that these should not have any difficulty complying with the expected performance-based standard.

Monsanto questioned the accuracy of the EPA's CTG estimates in the light of CMA's comments and Monsanto experience. EPA noted that CMA's emissions were ambiguously stated. They doubted that these were representative of current processes and hence could not base decisions on such comments without further substantiation.

---

[a]Control of Volatile Organic Compound Emissions from Manufacture of High Density Polyethylene, Polypropylene, Polystyrene Resins, May 1982.

[b]CMA Comments on EPA Model Plant Emission Factors for Polymers/Resins Manufacture, October 19, 1981.

Following Mr. Bir's discussion of the Monsanto CLAIMED CONFIDENTIAL process and lunch, a tour of the polystyrene operations was made. At the time of the tour all CLAIMED CONFIDENTIAL lines were operating.

CLAIMED CONFIDENTIAL

The emission points were observed including the CLAIMED CONFIDENTIAL tank vents, the process organic trap/scrubber vent, and the strand die exhaust vents.

After completing the tour of the operations, the participants met for a question and answer session regarding the process and tour. A review of Monsanto's comments on the draft BID Chapters 3 through 6 and the CTG was then made. Monsanto suggests that SOCMI fugitive VOC data rather than refinery fugitive VOC data be used for developing the polymers and resins fugitive VOC emission estimates. EPA noted that this comment has been frequently made by others and agreed to revise emissions and base them on SOCMI data. A definition of polystyrene is needed. Specifically identify crystal and rubber modified PS. Note that rubber modified polystyrene is considered a polymer rather than a copolymer and thus will be subject to the NSPS. If a polystyrene industry exemption is not granted, then Monsanto would prefer a performance oriented standard rather than a standard which specifies a type of control device. It was pointed out, for example, that although an incinerator could combust styrene emissions, the line to the incinerator would plug due to a buildup of polymer. EPA stated that they intend to write performance standards for both the CTG and NSPS documents rather than require specific control devices. Monsanto questioned whether the standards would cover all polystyrene processes or whether only the prevailing continuous processes would be included. EPA stated that the performance standards would be made to cover all polystyrene processes.

Monsanto representatives reemphasized the confidentiality of their process and their willingness to continue to communicate and cooperate with EPA during the NSPS development.

Attachment 1

NSPS AND CTG TECHNICAL EXCHANGE MEETING
EPA, PES AND MONSANTO PLASTICS & RESINS CO. PERSONNEL

MONSANTO STYRENE POLYMERIZATION PROCESS

PORT PLASTICS, OHIO

SEPTEMBER 15, 1982

1.14/ETH.1

PURPOSE OF VISIT

1. To view Monsanto Polystyrene operation from the standpoint of emissions control.

2. To exchange technical information on VOC emissions from such operations.

3. To review Monsanto comments submitted on EPA's NSPS and CTG draft documents, Chapters 3-6.

PARTICIPANTS

ENVIRONMENTAL PROTECTION AGENCY, Office of Air Quality

Mr. James Berry	Chief, Chemical Applications Section
Mr. Edwin Vincent*	Environmental Engineer

PACIFIC ENVIRONMENTAL SERVICES (EPA Contractor), 1905 Chapel Hill Rd., Durham, NC 27707

Mr. James Serne	Mgr., Research Triangle Park Operations
Mr. Kenneth Meardon	Principal Investigator

MONSANTO PLASTICS & RESINS COMPANY, Port Plastics, Ohio and St. Louis, Missouri

Mr. Ralph Becker	Supt., Tech. Serv. Dept. & Q C	Pt. Plastics
Mr. Wally Bir	Eng. Group Consultant	St. Louis
Mr. Joseph Galownia	Operating Supt., Lustrex	Pt. Plastics
Mr. David Krawczyk	Supt. Env. Health, Safety, & Medical	Pt. Plastics
Mr. Leo Paradis*	Mgr., Env. Operations	St. Louis
Mr. James Sampson	Gen. Mfg. Supt., Plastics	Pt. Plastics
Mr. Bruce Korblick	Operating Supv., Lustrex	Pt. Plastics

* Windowman

AGENDA

9:17 AM

GUEST ARRIVAL DELTA FL 721. PICK UP AT AIRFIELD BY MR. PARADIS

10:30 AM

- ARRIVE PLANT, OBTAIN PASSES. CONVENE, LABORATORY CONFERENCE ROOM BLDG. 11B.
- SELF INTRODUCTIONS. BRIEF BACKGROUND BY EACH PARTICIPANT — EPA/PES/MONSANTO
- REVIEW AGENDA, PURPOSE — PARADIS
- MONSANTO CONTINUOUS CONFIDENTIAL CLAIMED PROCESS DESIGN/PROCESS CONTROLS/ PROCESS EMISSIONS — BIR
- PLANT SAFETY & CONFIDENTIALITY — KRAWCZYK/PARADIS

NOON

LUNCH

PM

- PLANT TOUR
- CONFERENCE ROOM — FOLLOW-UP QUESTIONS — ALL
- MONSANTO COMMENTS — BID/NSPS & CTG — BIR
- SUMMARY - FUTURE PLANS — VINCENT/PARADIS

BY 4:15 PM

- DEPART PLANT FOR AIRFIELD, 5:15 PM FLIGHT — EPA/PES/BIR-PARADIS

1.14/ETH.2

Attachment 2

TECHNICAL EXCHANGE
ENVIRONMENTAL PROTECTION AGENCY
AND
MONSANTO COMPANY
AT
PORT PLASTICS, OHIO

PROCESS DISCUSSION
(TRANSPARENCIES)

SEPTEMBER 15, 1982
WGB

No. 2
WGB

MONSANTO'S PROCESS DISCUSSION

- EPA REQUEST
  - UNREACTED MONOMER RECOVERY METHODS
  - CONTROLLED EMISSION FACTORS
  - FUGITIVE EMISSIONS

- PRESENTATION
  - REVIEW MONSANTO'S LUSTREX® PROCESSES
  - PROCESS DESIGN AND CONTROLS WHICH LEAD TO LOW EMISSIONS
  - EMISSIONS RESULTS

No. 3
WGB

CLAIMED CONFIDENTIAL PROCESS ADVANTAGES

- IMPROVED PRODUCTS
- LOWER ENERGY REQUIREMENT
- MAJOR REDUCTION IN VAPOR EMISSIONS
- MAJOR REDUCTION IN WASTE WATER
- CLAIMED CONFIDENTIAL

No. 5
WGB

CLAIMED CONFIDENTIAL

No. 6
WGB

CLAIMED CONFIDENTIAL

FIG. 5

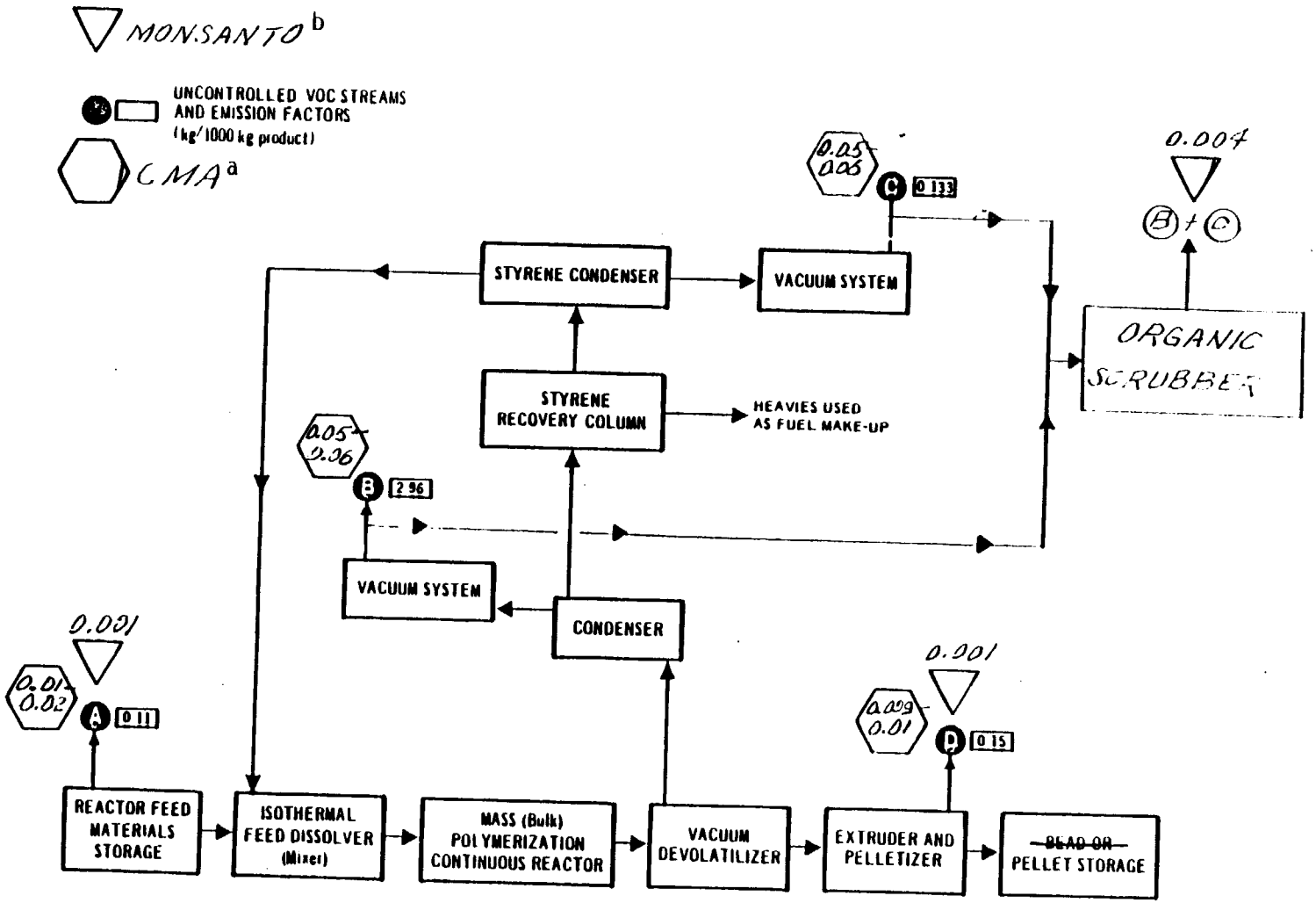

Figure 2–3. Simplified process block diagram of polystyrene manufacture by continuous process polymerization.

a CMA Comments on EPA Model Plant Emission Factors for Polymers/Resins Manufacture. Oct. 19, 1981

b Hydrocarbons Emissions Survey of the D Processes @ Monsanto Port Plastics Plant. Feb.-June, 1975

No. 9
WGB

TOTAL EMISSION FACTORS

	Kg VOC/1000 Kg resin	*Metric Tons/Yr
DRAFT CTG [a]	3.35	246
CMA COMMENTS[b]	0.119 - 0.150	9 - 11
MONSANTO[c]	0.006	0.4

*EPA Base Capacity - 73.5 Gg/Yr

a Control of Volatile Organic Compounds Emissions from Manufacture of High-Density Polyethylene, Polypropylene, Polystyrene Resins. May 1982

b CMA Comments on EPA Model Plant Emission Factors for Polymers/Resins Manufacture. Oct. 19, 1981

c Hydrocarbons Emissions Survey of the D Processes @ Monsanto Port Plastics Plant. Feb.-June, 1975

Attachment 3

HYDROCARBON EMISSIONS SURVEY

of the

"D" PROCESSES

at

MONSANTO PORT PLASTICS PLANT

February - June, 1975

by

POLLUTION CONTROL SCIENCE, INC.
6015 Manning Road
Miamisburg, Ohio 45342
(513) 866-5908

Conducted and Prepared By:

Robert C. Neal, P.E.
Manager, Air & Water Services

James F. Olsen
Environmental Technician

TABLE OF CONTENTS

Section		Page
1.0	EXECUTIVE SUMMARY	1
2.0	INTRODUCTION	2
3.0	TEST METHODS	
	3.1 Mobile Laboratory	3
	3.2 Sampling Techniques	3
	3.3 Analytical Techniques	8
4.0	"D" PROCESSES	
	4.1 [redacted]	10
	4.2 DC Process (Building 30)	10
	4.3 DI Process (Building 30)	10
5.0	APPENDIX	
	Field Data	12

1.0 EXECUTIVE SUMMARY

All hydrocarbon emissions from "D" Process sources are small and relatively insignificant.

2.0 INTRODUCTION

This report includes data collected on the "D" Processes in February, March, and June of 1975. The earlier data was included as part of a report entitled "Hydrocarbon Emissions Survey at Monsanto Port Plastics Plant" published in April 1975. Parts of this report (data and description) are excerpted directly from the original publication for sake of completeness.

Monsanto Company's Port Plastics Plant located in Addyston, Ohio is a major producer of plastic resins in the United States. The various resins produced at the Port Plastics Plant are derived primarily from butadiene, acrylonitrile, and styrene monomers.

The purpose of this investigation was to establish the composition and rate of volatile hydrocarbon emission from select process sources to determine:

1. Sufficient source definition so the total hydrocarbon emissions from this facility can be accurately estimated,
2. Which sources are the major air pollution contributors requiring top priority in future control efforts,
3. Sufficient source definition so the feasibility of various control methods can be evaluated on an individual source basis,
4. The composition of various emissions so compatible emissions may be combined for control purposes, and
5. Operating practices which could be altered to reduce air emissions and occupational exposure.

3.0 TEST METHODS

3.1 Mobile Laboratory

Due to the magnitude of this on-site investigation, a mobile laboratory trailer was set up adjacent to the manufacturing facilities to provide desk, analytical, and storage space necessary for this effort. The time, effort, and frustration saved by this arrangement was substantial. Similar facilities are highly recommended in any long duration contract efforts.

3.2 Sampling Techniques

Considerable efforts were required to establish the best available sampling technique. Initial plans were to use standard activated carbon tube techniques for sample collection. This approach was selected for the following reasons:

1. The method was developed and used extensively by the National Institute of Occupational Safety and Health (NIOSH) for the hydrocarbons of interest in this investigation,
2. Sampling methods are relatively simple and very flexible,
3. Extensive sampling can be done in relatively short time periods,
4. Analyses can normally be postponed indefinitely, and
5. Analyses could be performed at the home laboratory rather than on-site.

Preliminary sampling with activated carbon tubes produced unsatisfactory results for the following reasons:

1. Some of the emission sources [redacted] were super-saturated with water vapor which collected in the carbon tube adversely effecting hydrocarbon adsorption and ultimate analysis, and

2. Butadiene, which is adsorbable with activated carbon, has a very low adsorption capacity. That is, the ability to quantitatively collect butadiene is limited to very small total quantities.

Based on the above experiences, it was determined early in this study that carbon adsorption was not an acceptable sampling technique for this application.

Sampling with tedlar bags was tried as an alternate method. Tedlar bags were abandoned after a brief consideration for the following reasons:

1. Moisture laden streams again produced sampling and analytical difficulties due to the presence of considerable condensate,

2. Problems with diffusion and tedlar/monomer reaction were a known possibility, and

3. Cleaning tedlar bags to prevent sample contamination would have been extremely time consuming if not impossible in some cases.

An attempt was made to sample with a multicomponent freezetrap sampling train. The freezetrap, immersed in a cellusolve/aceton/dry ice batch, did not successfully remove the volatile hydrocarbons. In addition, difficulties with the physical sampling, sample recovery, and multicomponent analyses was both too time consuming and subject to cumulative errors. This approach was therefore abandoned.

Use of glass syringes for sample collection was considered at the outset of this investigation. They were not the method of choice initially due to the need for on-site gas chromatographic support, questionable accuracy due to condensation of hot gases within the syringes, and the fact that syringe sampling produced only an instantaneous grab sample. The difficulties experienced using other methods forced us to reconsider syringe sampling techniques.

A Hewlett-Packard Model 5750 B Research Gas Chromatograph with dual flame ionization detectors (FID) was set up in the mobile laboratory. Preliminary methods evaluation of syringe sampling was conducted using a single 1.0 cc gas tight syringe. Repetitive samples were analyzed from a relatively dry continuous emission source at near ambient temperature. Chromatographic reproducibility was much better than expected for such a small instantaneous grab sample.

The next step in developing the syringe technique was to overcome the condensation problem common to wet high temperature (130 - 150°F) samples. If condensation formed in the syringe, the total sample would not be delivered upon injection into the gas chromatograph. Thus, the already questionable grab sample would become less representative and more erratic. If the samples were collected and maintained slightly above stack temperature prior to injection, condensation should not occur. To evaluate

this approach, a special heat sink was fabricated for the 1.0 ml. syringe from a 1½" square aluminum bar. After marking the 1.0 ml. position outside on the piston shaft, the syringe was enclosed in the aluminum sink and heated to 150°F in a standard drying oven. To prevent loss of heat during transportation, an insulated box was constructed for the heated syringe. Each sample collected with the heated syringe was immediately returned to the lab and injected into the gas chromatograph for analysis. No significant reduction in syringe temperature occurred after collection. Inspection of the syringe showed no sign of sample condensation using this technique. Repetitive hot/wet samples were analyzed to evaluate reproducibility. Results were surprisingly good considering the numerous undefined variables associated with the method.

Satisfied that syringe sampling with immediate chromatographic analysis was the best available method for this evaluation, six 2.0 ml. gas tight syringes with "mini-nert" lock valves were ordered. Each syringe was equipped with an aluminum heat sink as described above. An external reference mark was scribed on each piston shaft at the 1.0 ml. position so the exact volume could be obtained without removing the heat sink.

Samples were obtained by first purging the syringe once or twice with stack gases. To obtain the actual sample, the syringe piston was withdrawn beyond the 1.0 ml. position and slowly depressed to the 1.0 ml. reference mark. After equilibration to atmospheric

pressure, the "mini-nert" valve was closed to seal the sample in the syringe. A gas chromatograph injection septum was placed on the needle tip for safety and protection from pluggage. All gaseous hydrocarbon data contained in this report were collected using these techniques and a 1.0 ml. gas sample.

No temperature correction was necessary for the sample volume (1.0 ml.) since it was collected at stack temperature and all emission calculations are based on ACFM flows.

The syringe technique as outlined above worked well throughout this study. However, several potentially serious problems were experienced with syringe sampling that should be documented for possible later reference.

1. Frequent checks must be made to insure against syringe leakage. The heated syringe technique puts abnormal demands on all teflon pistons and seals. These seals must remain gas tight under a back pressure of 40 psig at the gas chromatograph injection block. If not, part of the sample will be discharged to the atmosphere instead of in the chromatographic column.

2. Extreme care is required to insure against residual contamination. Whenever possible, a single syringe should be used for repetitive samples on a given source. Successive samples taken with a given syringe must be of comparable or greater concentrations. Extreme care must be exercised if both ambient and process samples are being run simultaneously. A blank sample (helium or other inert gas) must be chromatographed prior to using a syringe for ambient level work to insure against contamination. If residual material is present it can be removed by prolonged baking in an oven or high temperature gas purging. Repetitive inert gas blanks must be chromatographed until the syringe is clean.

3. Syringes equipped with "mini-nert" valves are recommended. They are convenient but increase the probability of syringe malfunction resulting from heating and use.

A wide variety of flow determination techniques was required to establish process emission rates. The large continuous flow sources were measured using a standard pitot-static tube and magnehelic gauge. An Alnor velometer was also used extensively for velocity determinations. Many of the sources required temporary stack extensions or other individual modifications to obtain the desired measurements. Several low flow sources were measured directly with a dry gas meter. Volume displaced or pump feed rate was used to establish discharge rates for a few sources.

Percent moisture was determined gravimetrically on a few select sources with a midget impinger train containing indicating silica gel. Gas was drawn through the train with a battery powered metering pump.

3.3 Analytical Techniques

Syringe samples were analyzed immediately after collection with a Hewlett-Packard Model 5750 B Research Gas Chromatograph equipped with dual flame ionization detectors (FID). A 10% SE 30 on 80-100 mesh chromosorb W column 10 feet X 1/8" S.S. was used for the analyses The chromatograph operating conditions were:

1. Column Oven Temperature - 40° to $160^{o}C$ @ 10°/min.,
2. Flame Detector Temperature - $260^{o}C$,
3. Injection Port Temperature - $210^{o}C$,
4. Electrometer - dual,
5. Hydrogen Flow Setting - 1.2 - 1.5,
6. Air Flow Setting - 3.0,
7. Helium Flow Setting - 2.0.

Standard hydrocarbon solutions (1,000 mg/l) were prepared in carbon disulfide for all the compounds except acrylonitrile and acetaldehyde. Gaseous standards were required for acrylonitrile and acetaldehyde due to peak interferences with the carbon disulfide. Fresh working standards (100 mg/l) were prepared as needed in new septum-capped sample vials. A performance check was conducted with the help of Monsanto personnel and equipment to validate the analytical methods.

All of the chromatograms will be filed for possible later reference.

4.0 "D" PROCESSES

4.1 [redacted]

Hydrocarbon emissions from the 1,422 ACFM [redacted] exhaust were only 0.043 lb./hr. Thus, the [redacted] is an insignificant hydrocarbon emission source. Specific hydrocarbon concentrations are reported on the field data sheet in the Appendix.

4.2 DC Process (Building 30)

No significant hydrocarbon emissions were detected from the DC extruder CLAIMED CONFIDENTIAL or DC/DI scrubber CLAIMED CONFIDENTIAL with only the DC process operating. Detailed sample data is reported in the Appendix.

4.3 DI Process (Building 30)

No detectable (less than 0.1 mg/M^3) hydrocarbon emissions were determined from initial testing of the DI process sources. Failure to detect any hydrocarbon was the result of a leaking reactor seal on the rubber dissolver. Due to very erratic production schedules, retesting was not possible within the time frame of the on-site investigation.

Additional DI testing was conducted on June 5-6, 1975. Emission data from this effort are summarized in the following table. Detailed field and analytical data are presented in the Appendix.

Low concentrations of styrene and rubber derivatives were found. However, very low flow rates result in relatively insignificant actual emissions.

DI PROCESS
EMISSIONS SUMMARY [1]

	EMISSION SOURCE	FLOW ACFM	TEMP. °F	TOTAL HYDROCARBON EMISSIONS lb./hr.	lb./day	Kg VOC/ 1000Kg Re
Reactor Feed Materials Storage	CLAIMED CONFIDENTIAL Blower					
	1. Styrene Charge	18	100	CLAIMED CONFIDENTIAL		0.00007
	2. [CLAIMED CONFIDENTIAL]	180	75			0.00023
	3. CLAIMED CONFIDENTIAL [3]		No Sample			
	4. [CLAIMED CONFIDENTIAL]	18	100	CLAIMED CONFIDENTIAL		0.00015
	CLAIMED CONFIDENTIAL Tank Vent					
	1. Styrene Charge	N.M. [1]	94	Insignificant		
	2. [CLAIMED CONFIDENTIAL]	N.M. [1]	67	Insignificant		
	3. [CLAIMED CONFIDENTIAL] [3]		No Sample			
	4. [CLAIMED CONFIDENTIAL]	N.M. [1]	89	Insignificant		
	DI Extruder	439.6	80	CLAIMED CONFIDENTIAL		0.00077
	DC/DI Organic Scrubber	2.1	40			0.0041
	Total Process (Maximum)	657.7		CLAIMED CONFIDENTIAL		0.0055

1. CLAIMED CONFIDENTIAL

2. N. M. Not Measureable. No flow was detectable at any time.

3. Samples were not collected due to low priority. This process operation is least likely to produce emissions.

5.0 APPENDIX

FIELD DATA

PROCESS

14-22 ACFM

Components \ Sample	2/4							Emission
	mg/M3	mg/M3	mg/M3	mg/M3	mg/M3	mg/M3	mg/M3	lb./hr.
Acetaldehyde	–							
Acrylonitrile	–							
Unknown A	–							
Unknown B	–							
Unknown C	–							
Unknown D	–							
Unknown E	–							
Toluene	–							
Ethylbenzene	1.19							
Styrene	3.47							
	3.52							
Total	8.18							

CLAIMED CONFIDENTIAL

Extruder [illegible] 370.3 [illegible]

Components \ Sample	Scrubber mg/M³	Scrubber mg/M³	Scrubber mg/M³	mg/M³	Extruder mg/M³	Extruder mg/M³	Extruder mg/M³	AVERAGE EMISSION Kg/1000 Kg lb./hr.
Butadiene	NO DETECTABLE EMISSION	NO DETECTABLE EMISSION	–		–	–	–	–
Acrylonitrile			–		–	–	–	
Unknown A			–		–	–	–	
Unknown B			–		–	–	–	–
Unknown C			–		–	–	–	
Unknown D			–		–	–	–	–
Toluene			–		–	–	–	–
Vinylcyclohexene			–		–	–	–	
Ethylbenzene			0.85		0.17	–	–	0.0004
Styrene			6.60		0.68	0.23	2.35	CLAIMED CONFIDENTIAL
[illegible]			–		–	–	–	–
Total			7.45	[CLAIMED CONFIDENTIAL]	0.85	0.23	2.35	0.0004 CLAIMED CONFIDENTIAL

① Lower Detection Limit is 0.1 mg/M³

1.1×10^{-5} Kg/1000 Kg

NO SIGNIFICANT EMISSIONS !

Components \ Sample	Styrene Charge Small Vent	Styrene Charge [CLAIMED CONFIDENTIAL] Blower	[CLAIMED CONFIDENTIAL] Small Vent	[CLAIMED CONFIDENTIAL] Blower	[CLAIMED CONFIDENTIAL] Small Vent	[CLAIMED CONFIDENTIAL] Blower	[CLAIMED CONFIDENTIAL] Small Vent	Heat-up [CLAIMED CONFIDENTIAL]
	mg/M^3	mg/M^3	mg/M^3	mg/M^3	mg/M^3	mg/M^3	mg/M^3	lb./hr.
Butadiene								
Acrylonitrile								
Unknown A								
Unknown B								
Unknown C								
Unknown D								
Toluene								
Vinylcyclohexene								
Ethylbenzene								
Styrene								
Total								

NO DETECTABLE EMISSIONS

(1) Leak in this reactor during testing - manhole cover gasket bad.

(2) No Flow through Small Vent - Controlled By Pressure Relief Valve.

(3) [CLAIMED CONFIDENTIAL] Blower Flow 218 ACFM @ 46°F

(4) No Detectable Emissions - All Concentrations Less Than 0.1 mg/M^3.

Extruders + Organic Scrubber

Components \ Sample		Organic Scrubber	D.I. Extruder						
		mg/M3	mg/M3	mg/M3	mg/M3	mg/M3	mg/M3	mg/M3	lb./hr.
Butadiene									
Acrylonitrile									
Unknown A									
Unknown B									
Unknown C									
Unknown D									
Toluene									
Vinylcyclohexene									
Ethylbenzene									
Styrene									
[illegible]									
Temperature		40°F	75°F						
Flow		2.1 ACFM	510.3 ACFM						
Total									

NOT TESTED

NO DETECTABLE EMISSION ①

① Lower Detection Limit - 0.1 mg/M3

DI EXTRUDER

Components \ Sample	6-5-75							
	mg/M^3	mg/M^3	mg/M^3	mg/M^3	mg/M^3	mg/M^3	mg/M^3	Kg VOC / 1000 kg lb./lbm
Butadiene								
Acrylonitrile								
Unknown A								
Unknown B								
Unknown C								
Unknown D								
Toluene								
Vinylcyclohexene								
Ethylbenzene								
Styrene	6.250							0.0012 CLAIMED CONFIDENTIAL
Total								0.0012 CLAIMED CONFIDENTIAL

1) FLOW = 439.6 ACFM @ 80°F

2) BASED ON CONTINUOUS OPERATION

DC/DI ORGANIC SCRUBBER

Components \ Sample	6-5-75 67°F mg/M³	6-6-75 108°F mg/M³	mg/M³	mg/M³	mg/M³	mg/M³	mg/M³	Kg VOC/1000 Kg[2] lb./DAY
Butadiene								
Acrylonitrile								
Unknown A								
Unknown B								
Unknown C								
Unknown D								
Toluene								
Vinylcyclohexene								
Ethylbenzene								
Styrene	2797.62	476.19						0.0016 CLAIMED CONFIDENTIAL
[redacted][3]								0.0024 CLAIMED CONFIDENTIAL
Benzene	4196.33	459.86						
								0.0041 CLAIMED CONFIDENTIAL
Total								

1) FLOW = 2.1 ACFM @ 40°F

2) MAXIMUM EMISSIONS BASED ON CONTINUOUS OPERATION

3) Several unidentified peaks were present. They are components derived from the rubber used in this process. These unknowns are approximately the same molecular weight as benzene. They were all quantified as benzene.

Sample / Components		6-6-75 Styrene charge.	6-5-75 CLAIMED CONFIDENTIAL	6-6-75 CLAIMED CONFIDENTIAL	CLAIMED CONFIDENTIAL	6-6-75 CLAIMED CONFIDENTIAL			
		94°F mg/M3	67°F mg/M3	88°F mg/M3	mg/M3	89°F mg/M3	mg/M3	mg/M3	lb./hr.
Butadiene									
Acrylonitrile									
Unknown A									
Unknown B									
Unknown C									
Unknown D									
Toluene									
Vinylcyclohexene									
Ethylbenzene									
Styrene		13.69	12.50	7.10		23.21			
Total									

Sample No

1) NO FLOW WAS DETECTED

DI [CLAIMED CONFIDENTIAL] BLOWER

Components \ Sample	6-5-75 Styrene 1 Charge 76°F mg/M3	6-6-75 Styrene 1 Charge 100°F mg/M3	[CLAIMED CONFIDENTIAL] 1 75°F mg/M3	[CLAIMED CONFIDENTIAL] 2 94°F mg/M3	[CLAIMED CONFIDENTIAL] mg/M3	6-5-75 [CLAIMED CONFIDENTIAL] 3 HEAT-UP 80°F mg/M3	6-6-75 [CLAIMED CONFIDENTIAL] HEAT-UP 100°F mg/M3	Kg VOC/1000 Kg lb./Day
utadiene								
crylonitrile								
known A								
known B								
known C								
known D					Sample			
luene								
ylcyclohexane								
ylbenzene								
tyrene	12.80	44.64	11.17	2.38	0			0.00028
?					2	4.76	30.65	[CLAIMED CONFIDENTIAL]
enzene		0.92	9.86	1.28				0.00016
tal								[CLAIMED CONFIDENTIAL]
								0.00046
								[CLAIMED CONFIDENTIAL]

1) BLOWER FLOW DURING STYRENE CHARGE - 18 ACFM
2) BLOWER FLOW DURING [CLAIMED CONFIDENTIAL] - 180 ACFM
3) BLOWER FLOW DURING [CLAIMED CONFIDENTIAL] HEAT-UP - 18 ACFM
4) MAXIMUM EMISSIONS BASED ON [CLAIMED CONFIDENTIAL] CYCLES PER DAY
5) SEVERAL SMALL UNKNOWN PEAKS WERE PRESENT AROUND THE BENZENE PEAK. THEY ARE ALL QUANTITATED AS BENZENE