Note: This is a reference cited in *AP 42, Compilation of Air Pollutant Emission Factors, Volume I Stationary Point and Area Sources.* AP42 is located on the EPA web site at www.epa.gov/ttn/chief/ap42/

The file name refers to the reference number, the AP42 chapter and section. The file name "ref02_c01s02.pdf" would mean the reference is from AP42 chapter 1 section 2. The reference may be from a previous version of the section and no longer cited. The primary source should always be checked.

POLYSTYRENE
AP-42
Section 5.13.3
Reference Number
1

Complex of Chemplex Co. for production of ethylene and polyethylenes. The ethylene plant is on the left side. High-density polyethylene units are behind and slightly to the right. Low-density polyethylene units are on the right. (Chemplex Co.)

Processes for Major Addition-Type Plastics and Their Monomers

Lyle F. Albright

Professor of Chemical Engineering
Purdue University, Lafayette, Indiana

McGRAW-HILL BOOK COMPANY

New York St. Louis San Francisco Düsseldorf Johannesburg
Kuala Lumpur London Mexico Montreal New Delhi
Panama Rio de Janeiro Singapore Sydney Toronto

CHAPTER EIGHT

Production of Polystyrene and Styrene Copolymers

I. INTRODUCTION AND PROCESS CONSIDERATIONS

Polystyrene and other styrene-type plastics, first produced commercially in the 1930s, are a major family of plastics throughout the world (6, 9, 22, 23, 26). In the United States, production capacity was approximately 3 billion lb/year by 1970, and it is expected to grow at a substantial rate (12). The sales prices for general-purpose polystyrenes, also called *crystal* or *straight polystyrenes*, which are homopolymers of styrene, have dropped during this time; they currently range from about 11 to 13 cents/lb. Colored, impact, or high-temperature polystyrenes are several cents per pound more. ABS plastics [containing acrylonitrile (A), butadiene (B), and styrene (S)] range from 24 to 40 cents/lb.

Lower costs of polystyrene polymers since the late 1930s have resulted from reduced costs of styrene (currently about 7 cents/lb), improved polymerization techniques, and increased competition. Reduced operating expenses per ton of polystyrene product are generally realized in larger plants. At present, 16 companies produce and sell polystyrene in the United States, and rated capacities per company vary from about 12 to 700 million lb/year (20).

Styrene-type polymers have a wide range of desirable physical properties. Since they are also relatively cheap, they have found many applications. The major and also fastest-growing ones include packaging of meat, poultry, eggs, cottage cheese, and oleomargarines; bottles and jars for drugs and pharmaceuticals; appliances, radio and TV parts; lighting fixtures; toys; and houseware items (20, 22, 23). Markets are also rapidly expanding in furniture, automotive applications, and disposable eating utensils (plates, bowls, serving trays, cups, and cutlery).

General-purpose (or crystal) polystyrenes have several very desirable properties (4, 18). They are hard, rigid, and transparent, with considerable brillance because of their high refractive indexes. Furthermore, they mold easily, have good electrical properties, are inert to many chemicals, and are easy to color in a wide range of hues. Brittleness and a relatively low softening temperature (about 85 to 95°C depending to some extent on the molecular weight of the polymer) do limit their use, however.

Polystyrenes are generally very resistant to weathering, and discarded polystyrenes have sometimes resulted in litter problems. Bio-Degradable Plastics, Inc. of Boise, Idaho is now manufacturing lids for cold-drink cups that are made of a photodegradable and biodegradable polystyrene. A photosensitizer is added to the polystyrene, and the resulting plastic begins to disintegrate within about 30 to 90 days when exposed to the weather.

Copolymers that are primarily styrene have been developed to obtain various improved properties. Copolymers prepared using either α-methylstyrene or maleic anhydride as a comonomer have higher softening temperatures. Improved "chemical resistances," e.g., for foods, result with styrene-acrylonitrile copolymers (SAN or PSAN). Rubber-modified polystyrenes, often designated as impact polystyrenes, provide improved impact resistance. Styrene-butadiene copolymers and ABS plastics are also important styrene-type polymers. Both ABS plastics and rubber-modified polystyrenes are two phase polymers in which an elastomeric phase is dispersed through a rigid plastic matrix, and they are sometimes designated as alloy polystyrenes. Styrene is always used in the preparation of the rigid polymer phases and also sometimes the elastomeric phases.

Crystal polystyrenes are produced by polymerization of essentially pure styrene. For the modified polymers, the styrene content varies for rubber-modified polystyrenes from about 88 to 97 percent, for styrene-butadiene copolymers from 50 percent and above, and for SAN copolymers from about 70 to 75 percent. SAN copolymers are frequently the solid-polymer matrix in ABS plastics.

Several types of polymerization processes are required to produce the wide variety of styrene-type polymers.

Chemistry of Styrene Polymerization

Although many aspects of the polymerization of styrene are relatively straightforward, a review of the polymerization mechanism helps explain how variations in the structure or the polystyrene molecule and the physical properties of the final polymer can be realized. Important structural features of any polystyrene product include the average molecular weight, molecular-weight distribution, number of branches on chains, and stereospecificity of the repeating units in the chain.

Styrene is commercially polymerized by a relatively conventional free-radical chain mechanism, involving reaction steps for radical initiation, propagation, termination, and chain transfer. Both cationic and anionic techniques can also be used for styrene polymerization, but commercial applications are at most rather limited.

An excellent review of the free-radical polymerization mechanism has been given by Platt (28).

Initiation of Chain Reaction Chain-propagation reactions are initiated commercially either by initiators (or catalysts as they are frequently but mistakenly called) or by thermal initiation. Important commercial initiators for suspension polymerizations are benzoyl peroxide, di-*tert*-butyl peroxide, *tert*-butyl hydroperoxide, and 2,2′-azo-bisisobutyronitrile. Other peroxide initiators used commercially have been reported by Pennwalt (27). For emulsion polymerizations, potassium persulfate is often used as an initiator.

Initiators thermally decompose, thereby forming active free radicals that are effective in starting the main propagation reactions (discussed in more detail later). They are chosen to a considerable extent for their kinetics of decomposition, often expressed as their half-life. At higher temperatures, the rate of decomposition is of course higher. Side reactions of some initiators include chain-transfer steps that result in lower-molecular-weight polymers. An initiator is selected in part by a trial-and-error procedure since the complete chemistry of initiator decomposition and side reactions is not yet known.

Styrene is one of the very few vinyl monomers that reacts, especially for higher-temperature polymerizations, e.g., above 120°C, to form free radicals that initiate polymerization. The exact mechanism is still somewhat speculative, but styrene is known to form up to at least 15 oligomers (29) that often isomerize to produce several rather complicated structures. Major dimer products include 1,2-diphenylcyclobutane, 2,4-diphenyl-1-butene and a noncyclic triene compound (28). This triene may be the true initiator, reacting with styrene by means of a hydrogen-transfer step resulting in two free radicals. Hence, three styrene molecules may be involved in a single initiation step. A kinetic model based on this mechanism indicates that the observed reaction order for initiation should vary between 2.0 and 2.5, depending on reaction conditions. Such an order is consistent with styrene polymerizations in many solvents, but not in bulk polymerizations, which often have apparent orders of 1.0 to 1.5, possibly because of the gel or Trommsdorf effect (discussed later).

Since the overall kinetics of polymerization is highly dependent on the kinetics of initiation, better mechanistic models for the initiation sequence would be helpful. What role, if any, the surface of the polymerization vessel has on thermal initiation has not been reported. Yet solid surfaces are sometimes effective for the production as well as the destruction of free radicals.

A complicating feature in styrene polymerization may be the presence of small amounts of impurities that for reasons not yet completely understood sometimes inhibit the polymerization. Furthermore, the inhibitors added to styrene to minimize polymerization during storage may also result in a large induction period, especially at the start of lower-temperature polymerizations. During the induction period, the free radicals first formed apparently react with the inhibitor or impurities until these latter compounds have been converted to inert compounds. Inhibitors sometimes also act to reduce the molecular weight of the polystyrene. Fortunately, para-*tert*-butylcatechol, the most common inhibitor, often added at only the 10-ppm level, has little effect on the kinetics or molecular weight for polymerizations at higher temperatures above 120°C (6).

Purity of the styrene feedstock is obviously an important consideration for rapid polymerizations. The inhibitors and some undesired impurities have on occasion been removed by washing steps. The styrene liquid is contacted first with caustic solutions and next with water washes; finally it is dried. Such washings are not usually needed for current commercial processes.

Propagation Steps The propagation steps that occur during the growth of the polymer chain occur almost exclusively by a head-to-tail arrangement with the repeating units, C_8H_8, in predominantly atactic configurations. Nuclear-magnetic-resonance measurements indicate a few isotactic and syndiotactic groupings, with the latter more common (7). Possibly a more stereoregular polymer is produced as the temperature of free-radical polymerization is lowered. An anionic but as yet noncommercial polymerization with solid catalysts produces isotactic polystyrene (25).

Evidence has been summarized indicating that a few abnormal links occur in the polystyrene chain (28) perhaps one in every 10,000 links. It has been suggested that such links may involve transfer of the free-

radical site to the phenyl ring and that chain growth then proceeds from this site on the ring.

Polystyrene and styrene are miscible in all proportions, so that the viscosity of the reaction mixture increases markedly as polymerization progresses. The question has been raised whether the steps for transferring monomer to the growing chain are hindered seriously as the viscosity increases (28). Certainly heat transfer is difficult in such a case. Effective agitation by specially designed equipment is often necessary to obtain good temperature control, especially for bulk polymerizations.

The kinetics of propagation may also be affected by the methods for transferring the heat of polymerization from the growing chain to the surroundings, e.g., the solvent, unreacted styrene, or reactor surfaces. The rate of energy transfer from the growing chain may be relatively slow, especially in a viscous medium, so that a "hot radical" is on the chain. Such a radical may have quite different reaction rates with styrene. There is evidence that the rate constant for the propagation step does vary between bulk and solution polymerizations (28). The suggestion has also been made that a complex may form between a polymeric free radical and a styrene molecule, and hence the kinetics of the propagation reaction may be affected. More information is certainly needed to clarify the controlling features of the propagation steps.

Termination and Chain-Transfer Steps Coupling (or combination) of two polymeric free radicals is the major terminating step for styrene polymerization at least at lower polymerization temperatures, such as $<100°C$ (4). Chain transfer to the styrene molecule is probably quite important at higher temperatures such as $>140°C$ (28). Disproportionation is presumably of minor importance in most cases. Chain transfer between a growing polymeric free radical and a polystyrene molecule occurs to a small extent when the concentration of polystyrene in the reaction vessel is high, i.e., when the extent of polymerization is high (3, 18). As a result, perhaps on the average up to two-tenths of a long branch occurs on each polystyrene molecule. Such long branches significantly increase the molecular weight of the resulting polystyrene molecules.

Segmental diffusion of the polymeric (high-molecular-weight) free radicals may be a rate-controlling step when the viscosity of the reaction mixture becomes large, which happens when polystyrene concentrations become high. In such a case, the apparent reaction rate constants for termination steps by coupling or disproportionation would decrease since two polymeric free radicals must diffuse and be brought together so that they can react. Yet diffusion of the relatively small styrene molecule is much less affected by changes in viscosity. Hence the kinetics of termination steps may be decreased to a considerably greater extent

by increased viscosities, compared to the kinetics of propagation reactions. This effect often results in high rates of polymerization and in high-molecular-weight polymers, it is often referred to as the gel or Trommsdorf effect or as autoacceleration.

The viscosity of the reaction mixture becomes very high at high polymerization levels, especially for bulk polymerizations. The viscosity also depends on the molecular weight of the polystyrene and on the temperature of the reaction mixture.

Chain-transfer agents are sometimes employed commercially for reduction of the molecular weights of the polymers (17). Hydrocarbons, particularly the dimers of α-methylstyrene (24, 30), mercaptans, and disulfides, have all been used extensively. Although carbon tetrachloride is an effective chain transfer agent, it often affects the quality of polystyrene adversely and so it is not employed commercially. Since the molecular weight and branching of the polymer are affected by the method of termination, a better job of "tailoring" the final polymer molecule might be possible if additional information on termination were available.

Structural Features of Polystyrene Molecules

Molecular weights for commercial polystyrenes frequently vary from number-average values of 40,000 to 180,000 and weight-average values of 100,000 to 400,000 (2, 6, 8, 22). As with other polyolefins, the molecular weight is important relative to the physical properties and the processibility of the polymer. Controlling the average molecular weight and the molecular-weight distribution is therefore important, and considerable information on how to do this is available. The rules vary, however, depending on the method of polymerization (28). For polymerizations involving thermal initiation the rules are summarized below (such polymerizations are at relatively high temperatures, for example, 120°C and higher, and are generally by bulk-polymerization processes):

1. The average molecular weight of the polymer decreases with increased polymerization temperatures. As in most free-radical addition polymerizations, increased temperatures cause the rates of the initiation and the termination steps to increase faster than the rates of the propagation steps.

2. The average molecular weight for isothermal polymerizations is relatively independent of the extent of polymerization, or styrene conversions, at levels up to at least 96.5 percent. Hence, the transfer of styrene molecules through the high viscosity mixture or gel obtained at higher conversion levels does not seem to be a controlling factor. Long chain branching, which would significantly increase the molecular weight of

the polymer, apparently is not very important up to at least 96.5 percent conversions.

3. The ratio of the weight-average to the number-average molecular weights of the polystyrene is essentially 2.0 for all isothermal polymerizations.

For polymerizations in which initiation is accomplished primarily by initiators, the type and amount of initiator employed and the method of adding the initiator are most important in affecting the concentration of free radicals during polymerization and hence in affecting the molecular weight of the polystyrene product. These latter polymerizations are normally at relatively low temperatures, less than 100°C where thermal initiation reactions are negligible; initiators are generally used in batch suspension processes.

When a fairly low-temperature initiator is all added at the start of a batch run, most of the initiator decomposes relatively quickly, forming free radicals. In such a case, the free-radical concentration near the beginning of the run is high but decreases as the run progresses since free radicals are destroyed by termination steps. As a result, both the average molecular weight and the ratio of molecular weights increase as the styrene conversion increases. The ratio often increases from 1.7 to greater than 2.0 as conversions increase to 90 percent or higher. More uniform concentrations of free radicals can often be obtained for batch runs by adding more initiator after partial polymerization or by using more than one initiator in the feedstock.

When an initiator-type polymerization process is operated with a steadily increasing temperature, two outcomes are possible, depending on the initiator employed and the starting polymerization temperature. When a fairly high-temperature initiator, i.e., one with a long half-life, is used, only relatively little initiator decomposes during the initial stages of the run and the free-radical concentration increases as the run progresses. Hence the average molecular weight of the polystyrene decreases with increased conversions. If, however, a low-temperature initiator, i.e., one with a short half-life, is used, the concentration of free radicals decreases as the reaction progresses, causing a higher-molecular-weight product to be produced as the temperature is raised.

Emulsion polymerization of styrene can be used commercially to produce polystyrene of very high molecular weight. Propagation occurs predominantly in the dispersed latex particles containing a shell that is monomer-rich (15). Since the initiators employed are soluble in the continuous water phase, chain termination by coupling is improbable and occurs primarily when a second initiator fragment (or free radical) enters the latex particle (28). The rate of termination is inversely proportional to the particle volume, and since the particle grows as polymerization progresses, the molecular weight of the polymer increases with conversion. Therefore, factors that affect the particle size, e.g., amount of surfactant (or emulsifier) used and the level of agitation, are indirectly important to the molecular weight of the polymer. Temperature also affects the particle size and the kinetics of the various free-radical steps in polymerization. Higher temperatures normally result in lower-molecular-weight polymers.

For emulsion polymerization, increased levels of initiator result in higher rates of polymerization and in somewhat reduced molecular weights. The molecular weights obtained in such a case are often still as high as those obtained when suspension- or bulk-polymerization techniques are used.

Low-molecular-weight compounds, including unreacted styrene, ethylbenzene from the styrene feed, and low polymers (dimers, trimers, etc.), are always present in rather significant amounts in the polystyrene product from the reactor. Low polymers (or oligomers) are present at about 0.3 and 2.5 percent for thermal-initiated runs at 80 and 230°C, respectively (29). In many cases, these low-molecular-weight materials are separated from the polystyrene by subjecting the hot and semimolten polystyrene to high vacuums. The flashing of these compounds is relatively slow and often incomplete because of their low vapor pressure when dissolved in polystyrene.

Fewer oligomers are normally formed for low temperature polymerizations or for ionic-type polymerizations, compared with high-temperature free-radical polymerizations. These low-molecular-weight materials may be present in sufficient quantities to have a significant effect on the properties (6).

1. These materials act as plasticizers, reducing the strength and the already low heat-distortion temperature.

2. Discoloration may result, since styrene and certain other unsaturated compounds are attacked by oxygen at higher temperatures or by exposure to sunlight. Unreacted initiator left in the polymer sometimes promotes color formation.

3. Slow evaporation of styrene and ethylbenzene from the surface may have detrimental effects. Crazing, primarily a strain-relaxation problem (21), seriously impairs the appearance of the polystyrene surface. Evaporation may sometimes contribute to the problem.

Antioxidants, lubricants, or pigments are frequently added in fairly small amounts to the final polystyrene. These materials must be chosen carefully so that the physical or chemical properties are not seriously affected.

Morphology of the polystyrene molecules can be varied by the stereospecificity of the repeating units in the polymer chain. Since each repeating unit has an asymmetric carbon atom, the phenyl groups can be attached to the polymeric chain in isotactic, syndiotactic, or atactic configurations (5).

Atactic polystyrenes always are noncrystalline, or amorphous, and at atmospheric conditions are in the glass state. Although amorphous, the molecules do have a semiordered arrangement (28), and there may be a rather high degree of parallel packing of the polymer molecules. Polystyrene has relatively large interchain distances because of the bulky aromatic rings, and the linear molecule has a helical conformation.

Isotactic polystyrenes can be produced using Ziegler-type solid catalysts (25), and the resulting polymers sluggishly crystallize to about 50 percent crystallinity if cooling of the molten polymers is very slow. Crystalline polystyrene has characteristics similar in many respects to those of other crystalline polyolefins. It is opaque because of the differences in refractive indexes between the crystallites and the amorphous regions. The mechanical properties of this polymer are similar to those of conventional atactic polystyrene at temperatures less than 80°C, the glass-point temperature (5), but the crystalline polymers have higher softening temperatures (2). If isotactic polystyrene is quenched from above its first-order transition temperature, about 230°C, the polymer is optically clear and almost completely amorphous. In such a case, the physical properties of the polymer are similar to those of atactic polystyrene.

Unsaturation occurs to some extent in polystyrene because of disproportionation or chain-transfer steps with styrene. Double bonds are of course relatively susceptible to oxygen attack.

Branching of the polystyrene molecule generally is thought to occur to only a very small extent (3, 28). It has been suggested that polymer particles that stick to the reactor walls may eventually branch or even cross-link to form gels (6).

Kinetics of Polymerization

Mathematical models that predict both the kinetics of polymerization and the molecular-weight characteristics of the resulting polystyrene are complicated since the overall reaction is complex. Terms must be included in such a model for all important initiation, propagation, termination, and transfer steps. Several industrial companies have developed proprietary models.

Recently, kinetic models have been published for free-radical polymerizations using 2,2′-azo-bisisobutyronitrile as an initiator. Models were

presented for continuous-flow stirred-tank reactors (13, 14, 19) and for batch reactors (16). The five reaction steps assumed to be important were thermal decomposition of the initiator, propagation, termination by coupling (or combination of two free radicals), and chain transfers with the monomer and the solvent. Several somewhat arbitrary assumptions were made in order to obtain an adequate fit between the experimental and predicted results.

It was assumed in the above models that 60 percent of the initiator fragments generated polymer chains. In addition, both solvent- and viscosity-correction factors were applied to the kinetic rate constant for the coupling step. Increased concentrations of solvents and/or higher viscosities are thought to be effective in decreasing the mobility of the reactants and hence in decreasing the effective kinetic rate constants. Although the predicted results agree quite well with the experimental results, the resulting kinetic model appears to be at best only semitheoretical. Caution should be employed in using these models for predicting mechanistic details of the polymerization.

Platt (28) has reported kinetic information for thermally initiated polymerization of styrene. At a constant temperature, the rate of polymerization decreases steadily with increased conversions and hence at decreased concentrations of unreacted styrene, as shown in Fig. 8-1. At conversons of about 90 to 95 percent, the rate becomes very low and difficulty is experienced in getting essentially complete polymerizations. Two techniques are frequently used to obtain significant rates of polymerizaton at high conversions: the temperature is often raised to perhaps 220 to 280°C as the conversions increase, and certain initiators can be

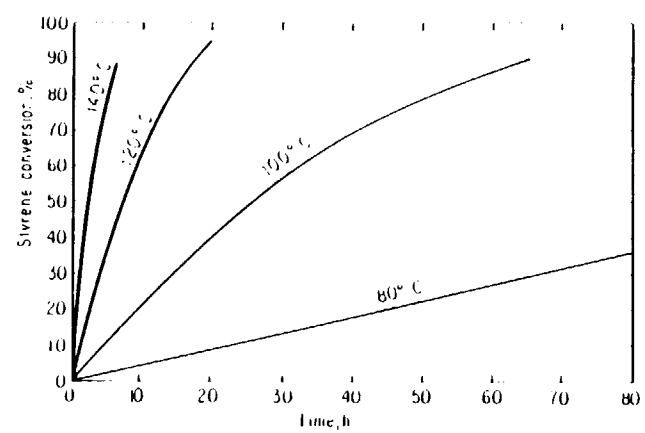

Fig. 8-1 Thermally initiated polymerization of styrene as a function of time

used to promote polymerization at higher conversions (and higher temperatures) (1).

There is still the need for a better understanding of the reaction mechanism and for more kinetic information. Kinetic models of the type that have been published are most useful for investigating the effect of operating variables on both the kinetics and type of polystyrene produced. Tailoring a polystyrene product for a given molecular-weight distribution and hence specific applications is greatly simplified with such a model.

Transport Phenomena Occurring during Polymerization

Temperature control and flow patterns of the mixtures of polystyrene and styrene are critical in many polymerization reactors. These mixtures have viscosities as high in some cases as 1 million cP (10); they are also nonnewtonian fluids, for which the viscosity decreases with increased shear rates. The viscosity is also affected by the molecular weight of the polystyrene and to at least some extent by pressure. Pressure drops in some flow reactors are relatively high because of high viscosities of the reaction mixture. Thermal conductivities of the mixtures are often very low, frequently varying from about 0.2 to 1.2 Btu/(h)(ft^2)(°F/ft) and depending to a considerable extent on the level of polymerization. Heat-transfer rates from such mixtures are very low.

Flow and temperature patterns in flow-reactor systems may be quite complicated. Since the flows are generally laminar, and since shear rates in the nonnewtonian fluids vary significantly in a direction normal to the flow, the average residence times of differential volumes (or portions) of the reaction mixture vary significantly as they pass through a tubular or tower reactor. Brasie (10) indicates that 10 percent of the material may have residence times that are 4 to 10 times the mean residence time. Large temperature gradients in a direction normal to flow also occur, but agitation helps minimize them. Brasie (11) has shown that radial temperature variations of about 15 to 80°C can be expected in 1.5-in tubes as polystyrene concentration increases up to 30 percent. Even larger temperature variations occur at higher concentrations.

From electron-microscope observations, Grancio and Williams (15) have reported evidence for the complicated transfer steps occurring inside the monomer-polymer particles during emulsion polymerization. The centers of the particles are polymer-rich while the shells are monomer-rich.

As indicated earlier, diffusion or transfer of polymeric free radicals in the reaction mixture may be a controlling step in the polymerization sequence, especially when the polymerization is almost complete.

II. COMMERCIAL PROCESSES FOR POLYSTYRENE

Several processes are used for the commercial production of homopolymers (general-purpose or crystal polystyrenes) and of copolymers of styrene (6, 26, 37, 61). Major commercial processes for homopolymers employ techniques of bulk (or mass), solvent (actually a modified bulk), and suspension polymerization. These processes and emulsion polymerization processes are also employed for the production of important copolymers of styrene. Other polymerization techniques have been considered, including cationic and anionic polymerizations, but the latter are of little or no commercial importance. Commercial techniques for the production of homopolymers will now be considered in detail. Since the same processes and often the same equipment are used for certain copolymers, some of the examples refer to copolymer production.

Bulk and Solvent Polymerization Processes

Styrene has been polymerized commercially for over 30 years by bulk- (or mass) polymerization processes operated both batchwise and by continuous-flow techniques. A modified bulk process that involves the addition of a small amount of solvent, such as ethylbenzene, is sometimes referred to as a solvent or solution process. These two types of process are of importance for the production of homopolymers of styrenes and some copolymers including impact (rubber-modified) polystyrenes. In general, for comparable levels of polymerization, reaction mixtures for the production of homopolymers have lower viscosities than mixtures for impact polystyrenes because of the dissolved rubber in the latter products. Heat transfer and temperature control are generally easier for homopolymer production, permitting differences in the reactor design and operation.

Flow Processes for Bulk or Solvent Polymerizations Flow processes like those used by The Dow Chemical Co., Badische Anilin- und Soda-Fabrik (BASF), and Union Carbide Corp. produce large quantities of polystyrenes. The processes of the first two companies were reported in 1970 to produce 1.8 billion lb of polymer per year whereas the Union Carbide process yielded 0.25 billion lb (61). These processes are similar in many respects to the well-publicized one (Fig. 8.2) used at Ludwigshafen, Germany, in the early 1940s (6, 26, 47).

For production of homopolymers of styrene (crystal polystyrenes), somewhat less agitation is required than for the production of impact

polystyrenes, and so somewhat simpler reaction systems are frequently permissible. Polymerization vessels suitable for impact polystyrenes are also suitable for the homopolymers, however. In some plants, economics dictates that the equipment be designed for production of both types of polystyrenes, permitting more flexibility in the plant operation.

Flow processes using bulk- or solvent-polymerization techniques employ two or more reactors in a series. In the initial reactor, often referred to as the prepolymerizer, up to about 11 to 50 percent of the styrene is polymerized. Polymerization to almost 100 percent then occurs in the later reactors in the series. Stirred autoclaves and tower reactors are employed in these processes. In some processes discussed later, suspension-polymerization reactors operated batchwise are employed for the final stages.

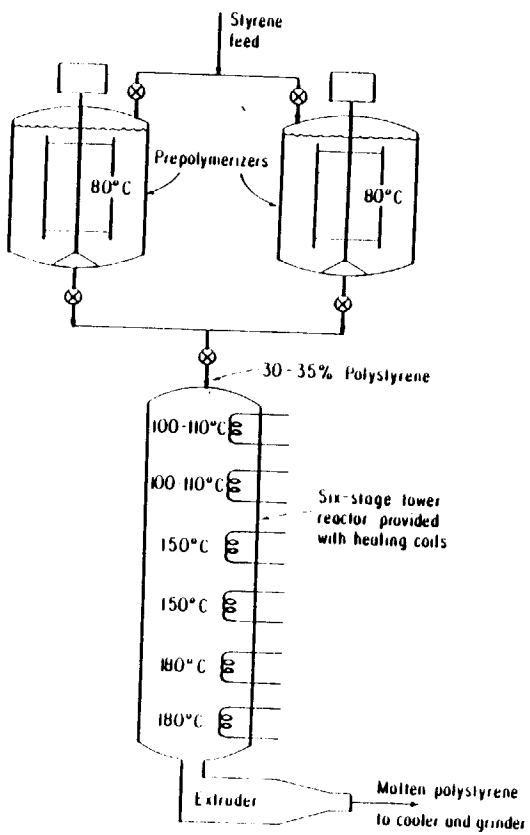

Fig. 8-2 Polystyrene tower process used in Germany in the early 1940s.

Stirred Autoclaves Used as Polymerization Vessels: Stirred autoclaves are used for the polymerization of styrene in both continuous-flow and batch processes. They can be designed either as prepolymerizers or as polymerization vessels to be used when high concentrations of polystyrene are present.

When autoclaves are used as prepolymerizers, rather conventional mixing equipment is normally adequate, since the reaction mixtures have fairly low viscosities. Heat transfer to the internal coils or tubes is in general good. Such autoclaves are frequently used as prepolymerizers in plants producing both crystal and impact polystyrenes. For the polymerization of high-viscosity mixtures, such as those with high polymer concentrations, the autoclaves must be provided with low-speed heavy-duty agitators that require high power inputs. Considerable backmixing of the reaction mixture generally occurs in these autoclaves, resulting in relatively constant temperatures and compositions throughout the vessel. With high-viscosity mixtures, however, mixing is less complete, and some temperature and composition gradients may occur.

The prepolymerizers used at Ludwigshafen in the early 1940s were stirred autoclaves constructed of aluminum and provided with internal heat-transfer coils (6, 26, 47). Flat paddles rotated at 50 to 60 r/min provided agitation in the 530-gal autoclaves, and the packing gland for the agitator shaft was water-cooled. A stream of nitrogen was introduced to flush styrene from the region where the agitator shaft entered the bottom of the packing gland. Consequently adsorption of styrene and the eventual accumulation of polymer there were prevented. This nitrogen also served as an inert blanket over the reaction mixture. Exit gases from the prepolymerizer vessel were cooled in a small water-cooled pipe-coil condenser. The condensed styrene was later recycled.

In the early German plants, approximately 30 percent of the styrene was polymerized in the prepolymerizers operated at about 80°C with an average residence time of 60 to 70 h. Because of the low rates of polymerization, two prepolymerizers were used in series in each polymerization line (see Fig. 8-2). Refractive-index measurements of the product stream were taken at frequent intervals to determine the concentration of the polystyrene.

Considerably faster rates of polymerization are obtained if higher temperatures are used. The average molecular weight of polystyrene is significantly affected by the operating temperatures, however. At 80°C the average is estimated at 370,000 by ultracentrifuge methods (47) or 880,000 by osmometric methods (37). At 120°C, a polymer with a lower molecular weight is produced.

The product mixtures from these early prepolymerizers were processed in two ways. Generally the mixture flowed continuously to a tower

reactor (discussed later) for additional polymerization. At other times, the polymeric syrup containing 30 percent polystyrene was fed to a vacuum two-roll drum dryer (6, 26, 47, 61). The unreacted styrene was evaporated, recovered, and then recycled. The chrome-plated dryer rolls, rotated at 1.5 to 2.0 r/min, were approximately 20 in in diameter

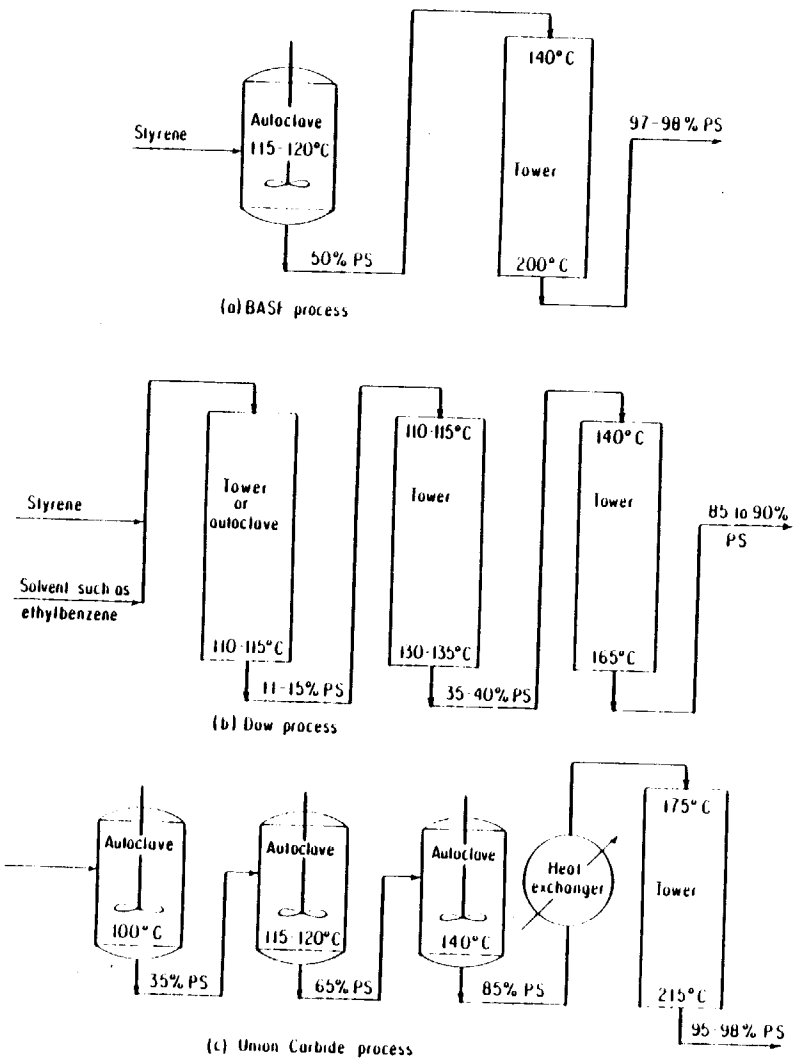

Fig. 8-3 Summary of three major processes for bulk polymerization of polystyrene: (a) BASF, (b) Dow, and (c) Union Carbide process.

and 48 in long. The system was maintained at an absolute pressure of 10 to 15 mm Hg using a three-stage steam ejector. The film thickness of the polymer on the rolls was about 0.06 in. In the German plant, two prepolymerizers and two drum dryers were used for production of 30 to 35 lb/h of polystyrene with especially high molecular weight. Such a small unit is no longer economical.

BASF still uses a reactor system similar to the one shown in Fig. 8-2, namely an autoclave employed as the prepolymerizer and a tower reactor for the final stages of polymerization. Their current prepolymerizer is operated at a higher temperature (about 115° to 120°C), however, as shown in Fig. 8-3*a*. With a residence time of about 4 to 5 h, the polystyrene concentration of the reaction mixture is about 50 weight percent.

The Dow Chemical flow process (see Fig. 8-3*b*) has a prepolymerizer that is normally a stirred autoclave. In one unit, a jacketed Pfaudler glass-lined autoclave equipped with an S-shaped blade stirrer was provided as the prepolymerizer (63). In an example reported for production of an impact polystyrene, the vessel was operated at 112°C with an agitator speed of 67 r/min. The feed rate was 2,425 lb/h of a mixture containing mainly styrene, the remainder consisting of dissolved rubber, ethylbenzene, and various additives. About 7,500 lb of the reaction mixture, equivalent to approximately 1,000 gal, was present in the reactor. The exit mixture contained 11 percent of polymeric materials based on an average residence time calculated to be slightly greater than 3 hr. For homopolymer production, somewhat higher polymer concentrations (and hence higher temperatures) can be allowed with adequate temperature control.

In an autoclave with rather conventional mixing and with heat transfer through only the jacket, a 30 percent level of polystyrene in a polystyrene-styrene mixture at 80°C is approximately the maximum allowable. Temperature control tends to become inadequate at higher polymer concentrations because of the resulting high viscosities, and then runaway reactions may occur. To permit autoclaves to be operated at higher concentrations of polymers, several modifications are employed for improving heat removal:

1. Smaller reactors with higher surface to volume ratios are used.
2. Internal heat-transfer surfaces, such as coils or tubes, are used.
3. Part of the styrene is vaporized and possibly refluxed.
4. More agitation is provided to increase the heat-transfer rates and to minimize temperature and composition gradients.
5. Small amounts of a solvent such as ethylbenzene are added to reduce the viscosity of the reaction mixture, causing higher heat-transfer

coefficients. The concentration of the styrene is also reduced somewhat by dilution with the solvent.

The viscosity of the mixtures can also be reduced by increased operating temperatures. The increased rates of heat transfer then possible are balanced in part (and sometimes entirely) by the higher rates of heat release caused by the faster rates of polymerization.

In the Union Carbide Corp. process (Fig. 8-3*c*) three or more autoclaves are used in series (31). The styrene monomer at 25°C is charged to the first autoclave, where at 100°C approximately 35 percent of the styrene is polymerized. Further polymerization up to a 65 percent level is obtained in the second autoclave, operated at 115 to 120°C. A polystyrene level of 85 percent is obtained in the third vessel, maintained at 140°C.

The Union Carbide autoclaves are jacketed vessels provided with a vertical agitator shaft. Several impellers on each shaft cause the reaction mixture to recirculate with an upward flow near the shaft. In addition, the bottom impeller has blades that "scrape the mass from the sides and force it inwardly toward the shaft and out the outlet." Because of the high viscosities of the polymer mixtures formed, the agitator structure is "rugged and heavy." The rate of rotation of each impeller shaft is relatively slow.

A portion of the styrene from the reaction mixture in the Union Carbide reactors is allowed to vaporize and then is condensed and recirculated. The temperature level in each autoclave is regulated by the level of vacuum applied, which is in the range of 18 to 22 in Hg.

Based on the rates of styrene polymerization (see Fig. 8-1), the three Union Carbide reactors are of different size. The rates of polymerization are estimated to be approximately 2, 4, and 7.5 percent polymerization per hour in the first, second, and third reactors, respectively. The amounts of polystyrene production in these three reactors are then calculated to be about 1.1, 2.2, and 4.2 lb/h per cubic foot of reaction mixture. The first reactor apparently has a volumetric capacity several times greater than the third reactor, the second reactor is about twice as large as the first reactor. The size of the reactors is dictated to a considerable extent by the need to maintain adequate temperature control during the critical stages of polymerization. Higher surface-to-volume ratios in the smaller reactors expedite heat transfer when the viscosities of the reaction mixtures are high and when the rates of polymerization are large. The agitators in the three reactors are probably quite different in design.

The partially polymerized mixture from the Union Carbide autoclaves is pumped by a screw conveyor to a pressure of almost 2 atm before

entering the final stage of polymerization. This mixture, containing about 85 percent polystyrene, first flows through a preheater that is jacketed and provided with a mandrel at its axis. The mixture flows in a narrow annular passageway and is heated to approximately 175°C before entering a tower reactor (discussed later). Some polymerization of course occurs in the preheater.

Tower Reactors: Tower (or tube) reactors are widely used for the production of homopolymers and copolymers of styrene. They can be designed for all levels of polymerization, including reaction mixtures with high viscosities. Tower reactors are often custom built for specific types of polystyrene or for a specific plant. Aluminum, stainless steel, or stainless-steel clad metals are common materials of construction.

Large tower reactors provide complicated heat-transfer surfaces; outer jackets, multiple tubes or coils in either vertical or horizontal positions, internally cooled agitators, and extended heat-transfer surfaces, such as special fins, are commonly employed. Reactors used for production of impact polystyrenes especially are generally equipped with agitators to increase heat-transfer coefficients and also to minimize channeling of the nonnewtonian fluids in the reactor. Power requirements of these agitators are high—sometimes are high as 1 hp of energy per pound of impact polystyrene produced per hour. Oil, water, and air have been used as heat-transfer agents in the jacket, tubes, or coils.

In the process used at Ludwigshafen in the 1940s (Fig. 8-2) the tower reactors had no mechanical agitation, and the polystyrene concentrations in them increased from about 30 to 95 percent. These units were relatively small, with diameters of 0.8 m and heights of 6 m (6, 47). Each tower was constructed of stainless-clad steel and was divided into six sections of approximately equal size. Temperatures were controlled by a jacket, internal coils, and an external electric-resistance heater. Temperatures in the six sections of the reactor were approximately 100 to 110, 100 to 110, 150, 150, 180, and 180°C, respectively. Since mechanical agitation was not provided in this vessel, rather large variations of temperature were present in each section. The exit product was electrically heated, and almost pure (about 95 percent) polystyrene was obtained at about 200°C.

Each small German reactor was operated with average residence times of about 60 to 65 h and produced polystyrene at about 11 kg/h, equivalent to about 800,000 lb/year. The rate expressed as 11 kg/h per cubic meter of tower volume [or 0.7 lb/(h)(ft³)] is low relative to modern units. In the early German plant, no real attempt was made to devolatilize the 3 to 5 percent of volatiles, mainly styrene, which is the current practice.

A large and modified tower reactor employed in the current process

(61) used at Ludwigshafen (Fig. 8-3*a*) is patented (36). The feed mixture to this reactor contains 45 to 60 percent polystyrene, often about 50 percent, and the remainder styrene. This mixture at 100 to 130°C enters the top zone of the reactor, which is maintained at 140°C. Later zones are at higher temperatures, and the bottom zone is at approximately 200°C. The exit product from the tower contains 97 to 98 percent polystyrene when the residence time in the tower is 3 to 4 h. In this tower, some styrene is allowed to vaporize and is removed from the top of the tower to help maintain temperature control. This styrene is condensed and then recycled to the prepolymerizer.

Current BASF towers are capable of higher yields of polystyrene on a given volume basis than the earlier German units. This improvement is caused primarily by improved methods of temperature control that allow somewhat higher temperatures and hence higher kinetics of polymerization. Approximately 7 to 8 lb/h of polystyrene is produced per cubic foot of reactor volume.

A tower reactor 15 ft in diameter and 40 ft high has been reported for the production of approximately 40 million lb/year of polystyrene (69). Such a tower appears to be essentially a scale-up of the BASF tower just mentioned, at least relative to its production capacity per unit of reactor volume.

Tower reactors like those used in Ludwigshafen must be provided with means for controlling the temperature. Several methods are available, including numerous tubes and coils used for heat-transfer purposes. Details on the internal construction of the BASF reactors have not been published, but a patent indicates a suitable arrangement for placing the tubes (34). A vertical tower reactor is filled with numerous banks of horizontal tubes arranged so that the tubes in each bank are parallel to the others. The tubes in alternating banks are horizontally perpendicular to each other.

Details of the commercial tower reactors currently used in the Union Carbide process (Fig. 8-3*c*) have not been reported. A small tower reactor described in a patent (31) contained two sections and was not mechanically agitated. A torpedo provided between these sections produced a narrow annular region for flow. For a larger tower reactor, more sections might be desired to promote plug flow of reactants in the system. An average residence time of 8 h completes the polymerization of styrene in the tower reactor from about 85 up to 95 to 97 percent polystyrene using an exit temperature of approximately 215°C.

Tower reactors of The Dow Chemical Co. are often agitated, and they are used for production of both crystal and impact polystyrenes (42, 54, 59, 63, 67). Figure 8-3*b* is the simplified flowsheet for a solvent-, or modified bulk-, polymerization process. Three reactors are frequently connected in series. The solvent reduces the viscosity of the reaction mixture so that temperature control is easier.

Ruffing et al. (63) have reported many details of the three reactors used in series for the production of about 18 million lb/year of high-impact polystyrene. These reactors can also be used for the homopolymerization of styrene. The first reactor, an autoclave, which contains approximately 1,000 gal (7,500 lb) of reactants, was discussed earlier in this chapter. The second unit is a special tower reactor with a cross-sectional area of 20 ft² and height of 18 ft. This vessel was constructed from two circular (48-in-diameter) columns 16 ft high. One quarter of the circumference or shell was cut from each column, and the two columns were then welded together at the open sections. The cross-sectional area of the final tower resembles a figure eight. The reactor is provided with two vertical impeller shafts; one shaft is located at the axis of each of the two cylindrical sections of the figure-eight column.

Heat-transfer surfaces are provided for this reactor by two means: the entire reactor is jacketed, and the two impellers have internal cooling systems. Each impeller consists of a shaft and attached crossarms. The shafts are constructed of 6-in piping. The crossarms are about 20 in long and constructed of 3-in piping; and three cross arms are welded 120° apart in a given horizontal plane or bank on the shaft. The banks of cross arms are positioned so that the axes of these arms are 4 in apart. Provisions are made with tubing inside the hollow shaft and crossarms so that coolant (probably water or oil) is pumped inside the impeller to and from the extremities of each arm.

The two impeller shafts are rotated in a counter direction, providing an overlapping action and effective agitation. The crossarms on the two shafts do not collide although they make a close approach as they rotate. Rotating the arms at approximately 10 r/min is used for production of impact-type polystyrene.

This second reactor has a capacity of about 16,000 lb of reaction mixture and hence provides a residence time of about 7 h. The temperatures employed in the reactor for an impact polystyrene range from about 112°C in the top section to approximately 133°C in the bottom. The polymeric concentration increases from about 11 to 37 percent in this vessel with a resulting significant increase in the viscosity of the reaction mixture.

The third reactor of the three reactor sequence (Fig. 8-3*b*) is a jacketed vertical tower 48 in in diameter and 16 ft high. This reactor is provided with a single impeller shaft to which are attached 20-in bars about 2 in in diameter. Banks of three bars are positioned about

12 in apart. Since heat transfer is considerably less critical in this third reactor, the impeller system is not cooled and the impeller rotates at a much slower rate of about 2 to 3 r/min. Temperatures increase from about 140°C at the top, to 155°C at the midsection, to 165°C or higher at the bottom. This reactor has a capacity of about 10,000 lb and hence provides a residence time of 4 h or slightly greater to cause the polymer concentration to increase from about 37 to 85 percent. Since about 10 percent of nonreactive solvent is present, the polymerization is essentially completed in this reactor.

The three-reactor unit described by Ruffing et al. (63) has a fairly high rate of polystyrene production. The prepolymerizer (or reactor 1), second reactor (a tower reactor), and the final tower reactor have polystyrene rates that have been calculated as approximately 2.1, 2.1, and 6.3 lb/h per cubic foot of reactor volume, respectively. The overall rate is about 3.4. The process using three reactors in series is said to be completely dependent on the solution of heat-transfer problems (42).

The level of backmixing in a reactor is important for polymer quality and properties. Some backmixing normally occurs, but most tower reactors, including those of the Dow process, are built to minimize it. Brasie (41) has patented a jacketed reactor; it is essentially a tower reactor in which little backmixing occurs and which is highly effective for high-viscosity mixtures. A complicated series of agitators is employed, and the reaction mixture flows in a very serpentine manner past numerous cooled tubes and the large finlike surfaces connected to the tubes. Because of the large heat-transfer surfaces, the amount of heat transfer in this reactor is high. This reactor would presumably be very effective for mixtures containing high concentrations of polystyrene.

The capacity of polystyrene units and lines has increased significantly in the last few years, resulting in a decrease in the operating cost per given weight of product. Table 8-1 indicates the raw materials and the utilities required per metric ton of polystyrene for the process of Mitsui Toatsu Chemicals, Inc. In their unit, four reactors are employed in series. Utility costs are estimated to be about 0.25 cent per pound of polystyrene, and such costs are probably fairly typical for modern processes.

Reactor lines capable of producing 130 million lb/year are currently employed (61), and even larger ones are technically possible. There may be little economic advantage in large units, however, since switching from one type of polystyrene to another is relatively slow, causing production of some off-grade material during the interim. These units are generally employed only for the production of the most important polymers, such as general-purpose (crystal) or impact polystyrenes. Hence,

few switches of product are ever made. A given plant often has more than one unit or line, resulting in total plant capacities of 200 million lb/year and greater (12).

Postpolymerization Steps for Bulk Processes In modern processes, the product mixture leaving the last polymerization vessel is devolatilized, perhaps mechanically worked, and then pelletized. Devolatilization is necessary to remove most of the unreacted styrene, solvent, and low polymers, including dimers and trimers, which have a detrimental effect on the properties of polystyrene.

A technique used by The Dow Chemical Co. involves a combination of a heat exchanger and a finishing tower (35, 63). The molten product stream from the final tower reactor is heated in a heat exchanger to 250 to 280°C. During heating, some additional polymerization of styrene occurs, and with impact polystyrenes some cross linking results.

The heated polystyrene in the Dow process is then fed to the finishing column, where the melt collects in a pool or a cup above a horizontal plate located near the top of the column. The melt then passes downward through a plurality of 1/4-in holes in this plate, and the resulting strands of polymer fall at least 3 ft before they coalesce in a pool in the bottom of the tower. Aluminum-clad steel is used on the inside walls to minimize dark surface deposits. An absolute pressure of about 10 mm Hg is provided, and the diffusion and vaporization of the volatile compounds are affected by the diameter and the length of the falling

TABLE 8-1 Materials and Utilities Required per Metric Ton of Polystyrene for Polystyrene Process of Mitsui Toatsu Chemicals, Inc.*

Materials:	
Styrene, kg	997
lb	2,200
Solvent, kg	4
lb	8.8
Additives, kg	23.4
lb	51.5
Blueing dye, g	0.2
Utilities:	
Electric power, kWh	310
Steam, kg	400
lb	880
Process water, m³	2.5
gal	660
Fuel (C heavy oil), liters	31
gal	8.3
Nitrogen, Nm³	1.5

* *Hydrocarbon Process.*, November 1971, p. 202.

strands and by the temperature. Temperature affects the diffusion rates in the melt and the flow characteristics of the strands. Design and operation of this unit are aided by complicated mathematical models of the flow phenomena, concentration gradients of the volatile compounds, and the temperature in the falling strands. The residence time of the polystyrene in this unit should be less than 10 to 20 min to minimize thermal degradation and cross-linking reactions.

A column of this design used in a production line of about 18 million lb/year of high-impact polystyrene has a diameter of 5 ft and a height of 10 ft (63). About 220 lb/h of vapor is volatilized, then condensed, purified by distillation, and recycled. The devolatilized melt is extruded and pelletized by conventional techniques.

A roll mill operated with a vacuum of about 29 in Hg has also been used for the devolatilization operation (31). In this case, the temperature rises to about 225°C because of the mechanical working; some of the residual styrene polymerizes; and most remaining styrene, ethylbenzene, and highly volatile materials are vaporized to yield polystyrene of 98.5 to 99 percent purity or even higher. Subsequently the molten polystyrene is sometimes stretched, often up to about 300 percent, as the polymer is cooled. The stretched polystyrene is then pelletized by a rotating cutter. Such polystyrene is said to mold more easily than the unstretched material.

The devolatilizers sold by the Marco Development Co. are used for processing several polymers, including polystyrenes, high-density polyethylenes, and polypropylenes (65). For polystyrene units (see Fig. 8-4), the volatile content can be reduced from as high as 53 percent to 1.5 to 2.0 percent when the unit is operated at 80 mm Hg absolute pressure. With a second unit operated at 9 mm Hg, the concentration can be reduced to 0.1 to 0.2 percent. Units are provided with a rotating vertical screw that has a diminishing diameter at its lower end. The melt as it flows downward is worked between the screw and the housing, exposing new surface to the vacuum. Polymer retention time is usually less than 1 min, thus minimizing thermal degradation. Units with vented turnscrews are used if a lower volatile content is required, but such units are considerably more expensive. It is claimed that a conventional unit with a 4,000 lb/h capacity has been used for over 4 years without serious mechanical problems.

A four-screw self-cleaning devolatilizing extruder that is used for processing 2,200 to 2,600 lb/h of polystyrene is shown in Fig. 8-5. Extruders of this design have capacities up to 10,000 to 12,000 lb/h. In these units, the polystyrene melt passes horizontally through a series of compartments or stages. Pressures in these stages vary from essentially atmospheric to high vacuums. Unreacted styrene and any solvent

present are removed from the top of each stage. The devolatilized polystyrene can then be extruded and pelletized at the exit of the extruder.

Thin-film devices have also found commercial application for devolatilizing various high-viscosity liquids (68). Rotary blades that just clear the walls of the vessel are operated at high speeds, thus causing high shear gradients in the thin films on the wall. This shearing action significantly reduces the apparent viscosities of the nonnewtonian fluids in the film. Pilot-plant data have been successfully used for the design of commercial units, and thin-film units appear to be of interest to polystyrene producers.

Bulk Polymerization Processes Operated Batchwise Two relatively different batch processes for bulk polymerization of styrene are operated commercially, but their importance is considerably less than that of the flow processes just discussed. The basic techniques of the batch processes are the same as developed in the 1930s and 1940s; i.e., styrene and possibly an initiator are mixed and heated until polymerization is completed.

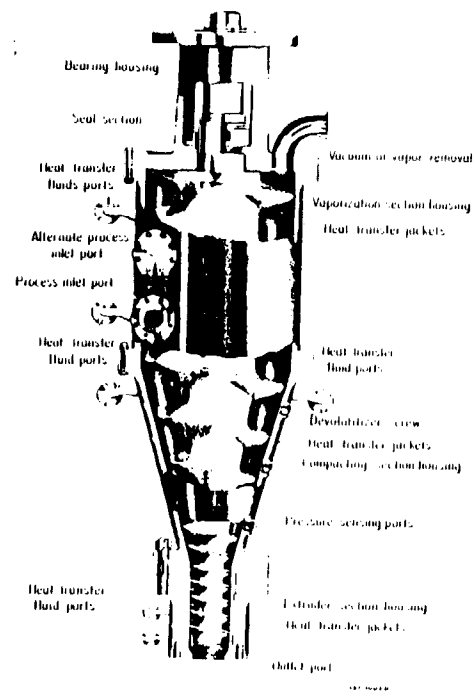

Fig. 8-4 Devolatilizer. (*Marco Development Co.*)

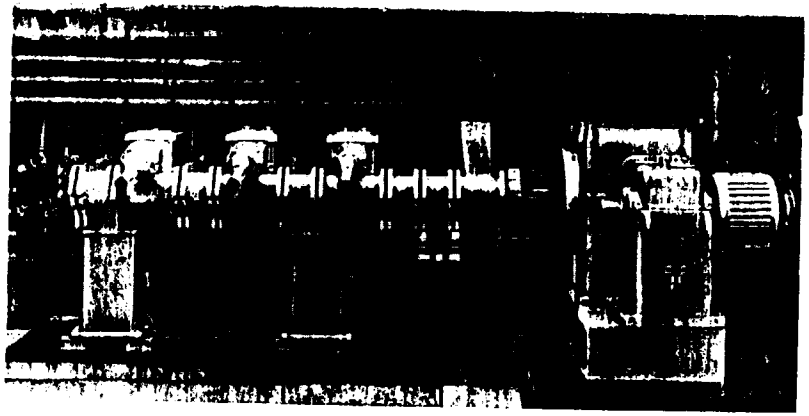

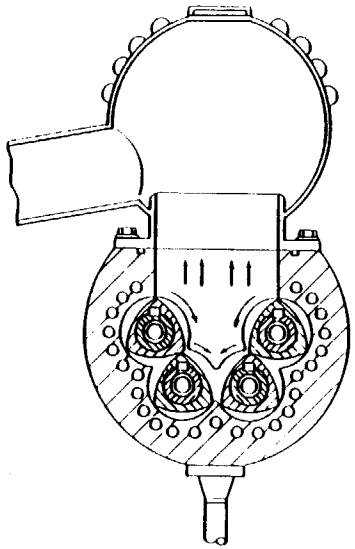

Fig. 8-5 Photograph and cross-sectional drawing of four-screw self-cleaning devolatilizing extruder for polystyrene. (*Werner and Pfleiderer Corp.*)

The batch processes employed by at least four American companies, including one of the largest polystyrene producers, use a chamber-type reactor (see Fig. 8-6) sold by T. Shriver and Co. (53). No mechanical agitation is employed in these reactors; they contain numerous cavities in which polymerization occurs. The equipment is relatively simple and includes storage tanks for the styrene and possibly for comonomers; pumps for the reactant olefins; proportioning control devices for controlling the amounts of styrene, comonomer, and initiator to be fed to the mixing tank; an agitated tank for mixing the reactants; often a prepolymerization reactor; the chamber-type reactor; and finally equipment for crushing and pulverizing large blocks of polystyrene. A supply of steam and cooling water is also needed.

The prepolymerizers, if used, are operated batchwise. Polymerization in an autoclave reactor is at approximately 80°C until about 30 to 35 percent of the styrene has polymerized. The syruplike mixture is then transferred to a chamber-type reactor.

The chamber-type reactors are similar to plate-and-frame filter presses. Each reactor consists of several combinations of plates and frames. Two cavities or molds are provided in each frame, allowing the production of two blocks of polystyrene. The platens and frames are made of cast aluminum, and the surfaces contacting the polystyrene are machined. Each platen is hollow and is provided with an inlet and an outlet line. Steam and water lines are connected to the inlet line using Teflon-lined hoses attached to suitable manifolds. Hot water can be produced by mixing cold water and steam.

The assembly of platens and frames is clamped together with a hydraulic ram before filling the reactor. The platens and frames are assembled without gaskets since styrene quickly polymerizes to produce its own gasketing material, which remains in place after the reactor is emptied.

The operation of the reactor is basically quite simple, at least in theory. Styrene or a partially polymerized (or prepolymerized) styrene with the consistency of honey is used to fill the cavities, or frames,

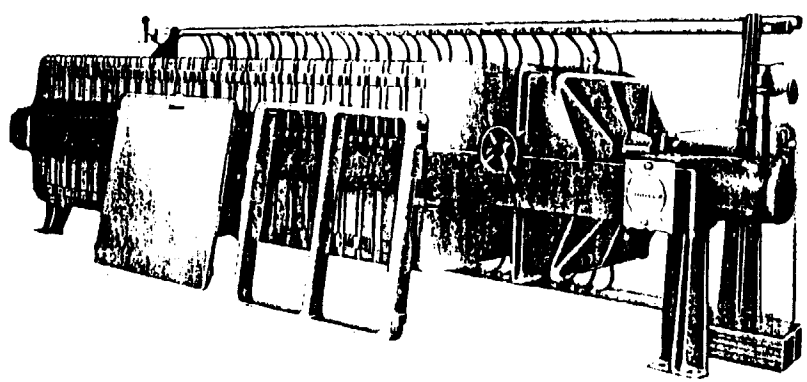

Fig. 8-6 Plate-and-frame batch reactor for polystyrene production. Reactor has 30 chambers, each producing two 24 × 52 in slabs 5 in thick. (*T. Shriver and Co., Inc.*)

of the reactor. Steam or hot water is then used to heat the platens and the styrene until polymerization starts. When a 28 percent prepolymerized mixture is allowed to heat steadily from 90 to 200°C over a period of 5 h and then is held at 200°C for 1 h, essentially complete polymerization is obtained (1). Initiators (discussed later) are sometimes added to promote high polymerization levels. Finally the reactor is cooled with water, the reactor is opened, and the polystyrene blocks are removed. Sticking of the blocks in the frames and to the platens has been a problem, and devices to remove the blocks have been developed.

The Shriver reactors are generally designed with 28 to 56 frames. The polystyrene blocks obtained are approximately 24 by 52 by 5 in and weigh about 200 lb. A 56-frame reactor produces 112 blocks per batch, or about 22,000 lb (11 metric tons) per batch. Figure 8-6 shows a reactor with 30 frames.

Temperature control is a critical factor in the Shriver reactor, and temperature gradients that occur in the reaction mixture during polymerization can be minimized if relatively low rates of polymerization are maintained. Operating variables for controlling the reaction, and hence the type of polymer obtained, include the temperature of the platens (temperature level and temperature as a function of the batch cycle), the amount and type of initiator used, and the level of prepolymerization of the feedstock. Approximately one batch of product per day can be obtained if pure styrene is used as a feedstock whereas up to two batches are possible with a partially polymerized styrene. Hence, a 56-frame reactor can produce about 7.5 to 15 million lb/year of polystyrene.

If thinner frames, and hence thinner and smaller blocks of polystyrene, were used in the reactor, somewhat faster rates of polymerization would be allowable. Then increased number of batches per day would be possible.

An important advantage of this bulk polymerization process is the modest capital cost for the installed equipment. The reactor is the most expensive piece of equipment, and Shriver indicated in the early 1970s a price of about $117,000 for a 53-frame reactor (53).

Crystal polystyrene was previously produced in large amounts in unagitated polymerization vessels containing bundles of cooling coils and possibly other heat transfer surfaces in addition to the jacketed walls. These reactors are currently used to a more limited extent. A typical reactor of this type contains a large number of tubes, such as the one described by Platzer.* All portions of the reaction mixture are within several inches (probably generally 2 in or less) of a heat transfer surface. Somewhat better temperature control can often be realized in these reactors than in plate-and-frame reactors. The degree of temperature control depends to a considerable extent on the distances between the tubes and the other heat transfer surfaces in the reactor.

* See Fig. 1 of Ref. 61.

Liquid styrene or a prepolymerized mixture is added to the reactor, and the contents are then heated to start polymerization. The molecular weight of the polystyrene is controlled primarily by the temperature-time program, which is carefully followed. When polymerization is essentially completed, the reactor temperature is raised to reduce the viscosity of the reaction mixture to permit rapid draining. The polymer is then drained and devolatilized.

Improved control of the temperature in these batch reactors can be realized if mechanical agitators are also used. The time at reaction conditions and the temperature of the reactants can then be very carefully controlled, often better than in flow-reactor systems. As a result, polystyrenes with better-controlled molecular-weight distributions can often be produced.

The time to drain the polystyrene product from the batch reactor, to devolatilize, and to pelletize the polymer should preferably be fairly short. Otherwise the level of polymerization and, to some extent, thermal degradation may change, especially with the last portion of the polystyrene drained from the reactor.

Removal of the volatile compounds in the liquid-polystyrene product stream can be accomplished rather easily by methods similar to those employed for flow processes; but when solid polystyrene blocks are obtained, as in the chamber-type reactor, devolatilization may be harder. If the solid blocks are pulverized, ground, and then pelletized, the volatile compounds can be removed while the polystyrene is in the molten state during the pelletizing operation.

A Monsanto patent (1) indicates a method for obtaining higher levels of polymerization during batch polymerizations such as those in a chamber-type reactor. When small amounts of alkanoic acids and an initiator that is either dialkyl peroxide, alkyl perbenzoate, or alkyl peracetate are added to the styrene feed, the residual styrene content is reduced to about 0.35 to 0.5 weight percent. A mixture of organic hydroperoxides and a peroxy compound used in conjunction with the alkanoic acid, however, reduces the residual styrene content to less than 0.15 percent.

Labor costs for batch processes, and especially the one with the chamber-type reactor, tend to be high compared with flow processes. Reactor assembly and opening and polymer handling result in high labor costs.

Design of Bulk Polymerization Reactors Bulk (or solvent) polymerization reactors are designed to obtain as high a rate of polymeriza-

tion as possible, commensurate with adequate control of the temperature. Inadequate temperature control may result in runaway reactions and hot spots, causing styrene to vaporize, building up pressure. At least two serious explosions have occurred in commercial-flow reactors. Furthermore, temperature has a significant effect on the molecular weight of the polystyrene and also on the viscosity of a given reaction mixture.

Increased levels of agitation and of solvent and more heat-transfer surface all tend to give better temperature control, but they also increase the cost of operation. Hence it is uneconomical to provide more than a safe minimum of each. Both the capital and operating costs for the agitator system in flow processes are often significant portions of the overall costs. The electric motors and the gear reducers for reducing the motor speed down to the desired low levels for the agitator shaft are frequently relatively large. Combining several reactors in series for bulk-polymerization flow processes offers the important advantage that significant variations in the operating conditions can be provided rather easily in the various reactors containing materials of different composition.

For the design of flow reactors, including tubular reactors, complicated mathematical models solved with digital computers are often used to predict temperatures, pressures, flow velocities, polymer concentrations, and polymer characteristics, including molecular weight (11, 56, 57). Fairly theoretical information is needed about the physical properties and the kinetics of polymerization in order to solve these models. Part of this information is in the literature, but considerably more is in the proprietary files of various companies that produce polystyrene. These models have proved helpful for evaluating new reactor concepts or for modifying operating conditions. Some models also predict the characteristics of the product, including the molecular weight.

Suspension-Polymerization Processes

Suspension-polymerization processes are preferred by several companies for the production of homopolymers of styrene, impact polystyrene, expandable polystyrene, styrene-acrylonitrile copolymers, and some ABS copolymers. Plants having annual capacities of 100 million lb/year or greater have been built (38). In the suspension-type polymerizers, the organic phase is dispersed as droplets throughout the continuous water phase.

Polymerizer Design and Operation In a typical polystyrene plant, at least several polymerization reactors are operated batchwise, and they are similar in design to those used in other suspension processes, including polyvinyl chloride production. The reactor temperature is controlled using a jacket and sometimes with internal-cooled baffles (38).

The reactor vessels range in size from about 2,000 to at least 15,000 gal; even larger vessels are currently being designed. Both glass-lined and more recently stainless-steel reactors are employed commercially (see Fig. 8-7 for a picture of one such reactor). The latter type, having inner walls of polished 304 stainless steel, provides significantly higher heat-transfer coefficients than glass-lined reactors. The larger reactors are generally of the stainless-steel type and often contain cooled baffles.

Mechanical agitators, frequently turbine type, and baffles provide the desired agitation, and the organic reaction mixture, initially primarily styrene, is dispersed as droplets of about 0.1 to 1.0 mm throughout the water phase. Polymerization occurs in these droplets within several hours' time, and the water maintains excellent temperature control in the droplets.

The feedstocks and process conditions employed depend on the type of polystyrene required. A water-to-styrene ratio varying from about 1:1 to 3:1 is currently common (28). Grim (50) in a 1955 patent, however, has reported examples in which even lower ratios, such as 1:3, were used in relatively small reactors. Smaller ratios tend to give higher production capacities for a given reactor, but temperature control by heat transfer with the jacket becomes more difficult because of the greater amounts of polymer formed. At lower ratios, polymer sticking or deposition on the walls of the reactors increases. Such depositions are to some extent affected by the wall temperatures of the reactors.

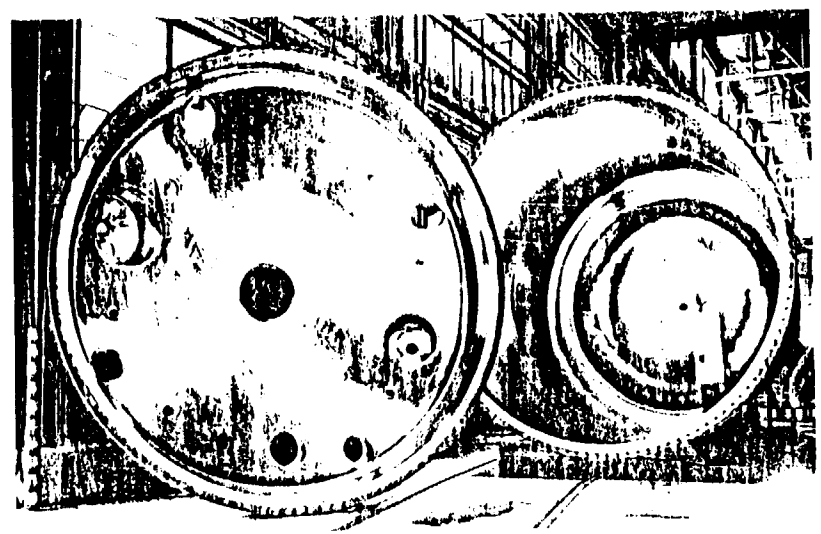

Fig. 8-7. Electropolished interior of 15,000-gal stainless-steel clad autoclave used for suspension polymerization of styrene. (*Brighton Corp.*)

Initiators soluble in styrene are commonly used in suspension processes, since the reaction temperatures are generally too low for adequate thermal initiation of polymerization. Now more than one initiator is frequently used, and a programmed increase of temperature is provided for the batch run. Selecting the initiators so that free radicals are produced over a relatively wide range of temperatures is recommended for effective operation of a reactor (45).

The exact recipes used for suspension processes are generally considered proprietary. Suspending agents and protective colloids are always used to stabilize the dispersed organic droplets in the water. Several inorganic salts, including calcium, barium, and magnesium phosphates, are often employed in conjunction with a small amount of an organic surfactant such as dodecyl benzene sulfonate. Grim (50) has presented considerable information for polymerizations with benzoyl peroxide as the initiator and with calcium phosphates. He reported several runs in which the first 6 to 7 h of the run were at 90°C. Some calcium carbonate was then added as a buffer, and the remaining 3 to 5 h of the run were at 110 to 115°C. Other recipes often use about 1 to 5 percent zinc oxide (based on the styrene monomer) or magnesium silicate (37, 28). These inorganic salts are relatively insoluble in the water, and they accumulate at the interface between the two liquid phases. Organic polymers that are relatively water-soluble are also used in many recipes. Polymers that also accumulate at the interfaces include polyvinyl alcohol, methyl cellulose, and pectin.

Suspension processes for polymerization of styrene are similar to those described earlier for production of polyvinyl chloride, and flow sheets of the polystyrene processes have been published (28, 33, 43). Temperature control during styrene polymerization is considerable easier to achieve because of lower heats of polymerization than for polyvinyl chloride processes. As a result, large polymerization vessels are frequently used for polystyrene processes, causing the production cost per unit of polymer to be decreased.

An inert gas such as purified nitrogen is frequently used as a blanketing agent in the polymerizers in order to maintain a positive pressure at all times during the cycle and prevent air leaks. At temperatures less than about 93°C, the sum of the vapor pressures of water and styrene is less than atmospheric. Furthermore, the partial pressure of the styrene drops as polymerization progresses.

Cosden Petroleum Co. have described their method for adding the reactants to the polymerizer (33). Warm, deaerated, and highly purified water is first added. Agitation is then started, and the liquid styrene and any comonomers are next added. Sometimes the stabilizers, surfactants, and initiator are premixed and added with the styrene, and sometimes they are added separately. The reaction suspension is then heated to start polymerization. The use of warm water as a feedstock minimizes the time required for heating the mixture to reaction temperatures. The time to complete polymerization varies particularly with the amount and type of initiator(s) used and the temperature.

The critical stage of polymerization normally occurs at polymer concentrations between 30 and 70 percent. In this range, premature agglomeration of the soft, semisolid, and highly sticky droplets of polymer is always a matter of concern (37). Normally a relatively constant power input is required by the agitator motor, but sudden increases, as measured by a wattmeter, indicate that agglomeration has started. Additional suspension agent should be added immediately since further agglomeration may cause the motor to stall. In severe cases, a large amount of inhibitor, e.g., sulfur dissolved in styrene, is added to stop polymerization. Failure to follow these steps may result in excessive agglomeration of the organic reactants, followed by a runaway reaction. Pressure-relief valves and exhaust lines are provided for such emergency situations.

Insufficient agitation of the suspension causes poorly formed beads or droplets (37), and too much agitation may result in deformed beads or entrapped gas (from the gas phase) in the beads. A momentary failure of the agitator often results in irreversible agglomeration.

With two or more initiators and with increased temperatures during the run, more uniform concentrations of free radicals and more uniform rates of polymerization are frequently possible. Reactor design and operation are based in part on the maximum rate of heat removal. Thus more uniform rates of polymerization permit higher production capacities of a reactor. As polymerization progresses, and as the styrene concentration decreases, a sharp drop in the rate of polymerization eventually is reached. Residual-styrene concentrations at the end of a run are frequently as low as 0.1 percent. Even with carefully controlled polymerizations, the ratios of the maximum to the average rates of polymerization vary from perhaps 2 to 3.5 or even 4. The range of this ratio has decreased as improved operating techniques have been developed.

Water is normally used as a coolant during the exothermic portions of the batch run. The relatively cool water is pumped through the jacket at a rapid rate to promote high rates of heat transfer. Part of the exit water from the jacket is recycled with a pump, and the remainder is discarded. Either normal cooling water, refrigerated water, or occasionally a refrigerated brine solution is used as makeup to the jacket. The makeup liquid must of course be at a significantly lower temperature than the liquid in the jacket if reasonably low water usage

is to be realized. During the start-up or the final stages of the batch run, either hot water or steam is used in the jacket. Hot water is prepared by adding steam directly to the water stream being recirculated.

Calculations are shown in Table 8-2 for a polymerization in a 5,000-gal glass-lined reactor. The operating conditions and variables shown are quite typical, and the water provided in the jacket has an average temperature of 107°F (42°C). Normal cooling water is often adequate for the above run. When the ratio of the maximum to the average rates of polymerization is reduced to less than 2.5 (as shown in Table 8-2), the average temperature of the coolant is higher than 107°F. With larger reactors that have lower heat-transfer surface-to-volume ratios, lower temperatures are required for the coolant. With water used in the jacket, glass-lined reactors are generally limited to 10,000 gal and less, but larger stainless-steel reactors can be used.

Upon completion of the polymerization, the polymer-water slurry in the polymerizer is generally cooled to 185°F (85°C) or even less. Agglomeration of the polymer particles is then minimal as they are transferred to the hold tank.

Cosden Petroleum Corp. indicated that in 1958 they were using four 2,600-gal reactors for the production of about 20 million lb/year of polystyrene (33). This production rate is equivalent to 0.23 lb/h per gallon of reactor volume. Such a value is probably quite typical for commercial reactors operating with a total time for a batch run of 14 h. About 5 h of that time is required on the average in each run for loading (or charging) reactants, evacuation of air, heating, cooling, discharging, scheduling, and cleaning (38). When the actual time for polymerization is reduced to about 5 h, the total time for a run approximates 10 h. In such a case, the production rate increases to about 0.32 lb/(h)(gal). Although the time required for polymerization is the single largest one in the overall batch cycle, process improvements to allow shorter times for heating or cleaning, for example, would be highly important in reducing the overall time cycle and hence in increasing the overall production capacity of a reactor.

TABLE 8-2 Coolant-Water Temperature for Suspension-Polymerization Run Using Styrene and Glass-lined Reactor

Nominal reactor size, gal	5,000
Available heat-transfer surface, ft²	350
Working volume (90% full), gal	4,500
Volume ratio of water to styrene	1.4:1
Volume of styrene in charge, gal	2,150
Styrene (7.5 lb/gal), lb	16,000
Conversion fraction during run	1.0
Total reaction time, h	6
Total heat of polymerization during run (300 Btu/lb), million Btu	4.8
Average rate of heat release, Btu/h	800,000
Reaction temperature	203°F (95°C)
Ratio of maximum to average rate of polymerization	2.5
Maximum rate of heat release, million Btu/h	2
Maximum temperature difference for reactor jacket, if U = 60 Btu/(h)(ft²)(°F) $\Delta T = \frac{2{,}000{,}000}{(350)(60)} = 96°F$	96°F (53°C)
Coolant temperature required in jacket, 203 − 96 = 107°F (43°C)	107°F (43°C)
Temperature of water feed stream	< 107°F (43°C)

From a technical standpoint, continuous-flow processes involving suspension polymerization techniques seem feasible. Stark (66), for example, describes a system using several stirred autoclaves in series. Cocurrent flow of an inert gas and of the liquid–liquid suspension in the connecting lines between the autoclaves is provided to minimize plugging and separation of the liquid phases in the transfer lines. The economic advantages of such a flow process are apparently minimal, compared with batch systems, especially when several relatively different polystyrenes must be manufactured in a single reactor train.

Polystyrene Recovery Operations for Suspension Processes The polystyrene-water slurry from a polymerizer is normally pumped to a hold tank provided with an agitator in order to maintain dispersion of the polymer particles in the water. Cosden Petroleum Co. (33) used one 2,600-gal hold tank for every two suspension polymerizers (also 2,600 gal each). Their hold tanks were glass lined and jacketed for temperature control. The function of hold tanks is at least threefold:

1. The polymer-water slurry is cooled below the heat-distortion temperature of the polymer, generally to 122 to 140°F (50 to 60°C).
2. Chemicals such as HCl are added to promote solubilization of the suspension agents in the water.
3. The tank serves as a storage tank until the slurry can be centrifuged.

Both batch and continuous-flow centrifuges have been used. Three-step centrifugation was used by Cosden Petroleum Co. (33). The slurry was first centrifuged in a continuous solid-bowl centrifuge to separate the water and solid phases. The solids were then washed with water in the second step. In the last step, the wash water was separated from the solids and discarded. The solid polymer particles normally retain 1 to 5 percent water.

The wet polymer particles should be dried to less than 0.5 percent water, thus avoiding problems when the polymer is later extruded or pelletized. Cosden Petroleum Co. used a hot-air rotary dryer that could

handle up to 4,500 lb/h of wet polymer, but it was normally operated at lower rates. Their single dryer was employed for the products obtained from their four polymerization vessels, and so careful scheduling of the polymerization runs was required to prevent mixing the different products from these runs. The temperature of the air used for drying was regulated so that the temperature of the solid polymer particles was 185°F (85°C) or less. Higher temperatures cause polymer degradation and sticking or agglomeration of particles. In other plants, counter-current steam-tube dryers and rotary-vacuum dryers have been employed.

After drying, the polystyrene particles are pneumatically transferred to hold or storage tanks for blending and testing purposes. From here, they are generally transferred to an extruder, where they are pelletized. The pellets are next stored and prepared for shipment.

The design and operation of the hold tanks, centrifuges, dryers, pelletizers, and storage and solid-transfer facilities for the polystyrene products are similar to those for polyvinyl chlorides produced in a suspension process. The Cosden polystyrene equipment is in a building maintained under a slight positive pressure of air in order to minimize dust. The air to the building is water-scrubbed and filtered.

Suspension processes can be adapted for the production of expandable polystyrene beads used to make foamed-polystyrene materials. An organic solvent (often pentane) is then added to the reaction mixture, where it accumulates in the organic phase. Following polymerization, the resulting beads containing adsorbed solvent are filtered or centrifuged, water-washed, and dried to produce beads containing 5 to 7 percent pentane. Eight additional suspension reactors were recently used by BASF in their plant at Jamesbury, New Jersey, to increase the plant capacity by 55 million lb of expandable product per year.

For production of the expandable polystyrene, a high-molecular-weight crystal-grade polystyrene is required to produce the proper structure when the beads are expanded. The solvent used always diffuses to some extent out of the organic phase whether in the manufacturing process (and particularly drying) or during storage. Since pentane forms explosive mixtures, precautionary measures must be taken whenever it is used. Other solvents have been used, including fluorocarbons, or Freons, which are nontoxic and nonflammable. Expandable polystyrenes can also be produced in solvent-type bulk processes. In such a case, the solvent, often pentane, is added to the styrene feedstock, and the solvent remains dissolved in the final product. Commercial development of these latter processes is probably relatively small compared with the suspension type.

Rather wide variations in the physical properties can be realized for

the general-purpose polystyrenes produced by suspension- or by bulk-polymerization processes by varying the operating conditions employed. Suspension, continuous-flow bulk, and some batch bulk processes have been perfected so that essentially identical polymers can be produced by each method, and curves of the molecular weight distribution can be essentially duplicated. Products obtained with the plate-and-frame type of reactors often have rather wide range of molecular weights (69); data furnished by Jones (55) give one such comparison:

Manufacturing method	Number-average molecular weight M_n	Weight-average molecular weight M_w	M_w/M_n
Suspension	103,000	299,000	2.9
Continuous bulk	103,000	274,000	2.7
Batch bulk (unagitated)	71,000	340,000	4.8

Emulsion Polymerization Processes

Most ABS copolymers, other copolymers, and several specialty homopolymers of styrene are produced by emulsion processes. The relative importance of emulsion processes has decreased significantly for homopolymers of styrene in the last 30 years, and most homopolymers (crystal or general-purpose polystyrene) are now produced more cheaply by bulk or suspension processes. Several homopolymers of especially high molecular weight and hence high softening temperatures are still made by emulsion processes. In addition, latices obtained by emulsion polymerization find more or less direct use in some surface coatings.

The manufacturing techniques used for ABS copolymers, other copolymers, and impact polystyrene will be discussed later. The emulsion processes for conventional polystyrene and closely related polymers will now be described next.

Process Details for Emulsion Polymerization The polymerization vessels used for suspension processes can generally also be used for emulsion processes, but the preferred type of impeller and baffles may be different for these two types of polymerization (48). Almost all reactors are glass-lined since scaling or polymer coating problems are frequently severe during emulsion polymerization. Polymerizers as large as 10,000 gal are suitable and use water as the coolant.

The flowsheet and some operational details of the unit employed several years ago by BASF have been published (26, 37). The feedstocks for a specific polymer were as follows: 3,100 kg (6,800 lb) of deaerated water; 130 kg (286 lb) of 14% soap solution; 3 kg (6.6 lb) of sodium pyrophosphate; 2.8 kg (6.2 lb) of potassium persulfate (used as an

initiator); and 1,500 kg (3,300 lb) of styrene. This mixture was introduced with agitation into the polymerization vessel, which had an apparent volume of approximately 1,500 gal. The pH of the mixture was adjusted to 10 to 11 by adding sodium hydroxide. Air was flushed from the reactor using nitrogen, and the reactor was heated with hot water or steam (in the jacket of the reactor) to almost 70°C. After a short induction period, the polymerization started as the temperature rose to 75°C, at which time cooling water was provided to the jacket. The temperature continued to rise, however, to 105°C within about 0.5 to 1.0 h causing a reactor pressure of approximately 2 atm. The temperature then slowly decreased to 90°C. Nitrogen was then used to flush out any styrene vapors left, the system was partially cooled, and the emulsion was discharged to the hold tank. An emulsion containing 30 percent solids was obtained in this run.

The BASF reaction vessels were sometimes provided with reflux condensers as an aid to temperature control (45). The preferred initiator, potassium persulfate, was added as a water solution that was freshly prepared to minimize decomposition during standing. In many current cases, the initiator solution is added during most of the run or during the initial stages, perhaps the first 1 to 2 h of the run. On other occasions, it is all added at the start of the run. Frequently the emulsifiers (or surfactants) are all added at the start of the run. Adding styrene, emulsifiers, and initiators during the run, although complicating the process, is often effective in improving the quality of the polymer and in reducing the amounts of surfactants required.

An azeotropic mixture of water and styrene refluxes at about 93.5°C (37). When the reaction is completed, the reflux temperature rises to 100°C. This technique is frequently used to signal the completion of the polymerization. Unreacted styrene is recovered at the end of a run by steam stripping, and the styrene is condensed and recovered using the overhead condenser of the reactor.

Many questions concerning the mechanism and role of the micelles still exist for all emulsion polymerizations. The level of solubility of the monomer in the water phase is important since the monomer transfers from dispersed droplets of monomer through the water phase to the micelles. Styrene is only slightly soluble in water, whereas vinyl chloride and (especially) vinyl acetate are much more soluble. The importance of the steps occurring during emulsion polymerization may then be quite different for these three monomers. Disagreements have been noted in the literature over the location of initiation. Claims have recently been made that initiation occurs in the water phase (62); others say it occurs in the micelles (51, 64); and still others (26) claim dual-phase polymerization.

The products obtained using continuous-flow emulsion processes that employ either one or three (in series) stirred reactors have been compared to the products from batch runs (46, 59). Broader ranges of particle sizes are obtained in the flow system. Information concerning the rates of polymerization and the molecular-weight characteristics of the polymer have also been reported. Such information will be helpful if commercial flow processes are to be developed.

Recovery of Polystyrene for Emulsion Process The BASF method used in the 1950s for polymer recovery involved discharging the emulsion to an agitated hold tank, where the emulsion was cooled to perhaps 30°C. The emulsion then flowed to the first of four agitated vessels connected in series. In the first vessel, coagulation occurred as a 0.5% solution of formic acid was added. In the second vessel, the slurry was heated to 60 to 90°C, causing partial agglomeration of the polystyrene solids. In the third vessel, ammonium hydroxide was added, and the mixture was heated. Finally in the last vessel, the slurry was cooled to approximately 30°C.

BASF transferred the slurry with a centrifugal pump to a vacuum filter. The resulting cake was washed with water, partially dried on a drum dryer, and then dried in a tray dryer. With a larger operation and with more modern equipment, centrifuges and a rotating tubular dryer would probably be used now.

Fluidized-bed dryers have also been used for recovery and drying of the solids from emulsions. Uniroyal, Inc. currently uses large flash dryers for drying their wet ABS solids.

Cost of recovery of the dry polystyrene is obviously relatively high for emulsion processes. Furthermore, removal of all the surfactants is not readily possible except by expensive operations. As a result, the color and to some extent the stability of the resulting polymers tend to be relatively poor.

Choice of Processes

Choice of the best process for production of general-purpose polystyrenes involves consideration of many factors but especially the cost of operation and the quality of the product. Emulsion processes in general cannot compete with bulk or suspension processes on either of the above two bases. High molecular-weight polystyrenes however, can be produced by emulsion processes rather easily.

Suspension processes and bulk (or modified bulk) flow processes can be operated to produce polymers of similar quality. Economic considerations often favor one process for specific types of products. Suspension processes, compared with bulk flow processes, have relatively simple and cheap reactors, excellent versatility for the production of numerous

types of products, and relatively standard operation. Disadvantages of suspension processes include more difficulty in obtaining high-purity products since water, stabilizers, and unused initiators tend to be contaminants. The costs of stabilizers and initiators are also significant. Labor costs are higher for the suspension processes.

For a 50 million lb/year plant, total production costs, excepting only the cost of the styrene, are estimated for general-purpose polystyrenes to be 1.75 to 2.12 cents/lb for suspension processes, compared with 2.14 cents/lb for processes using plate-and-frame reactors (40). The rather wide range of costs for suspension processes depends mainly on the size of reactors used, number of products to be manufactured, and degree of flexibility to be incorporated in the plant. For small plant capacities, up to perhaps 50 million lb/year, operating costs per given weight of polystyrene produced are often lower for suspension processes than continuous-flow bulk processes. The reverse is generally true with larger plants, however.

The suggestion has been made that molten polystyrene from a reactor or devolatilizer be immediately molded or extruded to produce the desired end-use items (39). In essence, a single line or process would be used to polymerize styrene and to do the desired molding or extrusion. Development and use of such a combined operation are potentially interesting since it eliminates several intermediate steps that are rather costly, including pelletizing, packaging, storage, shipping, etc. Success of such an operation will depend on the ability to coordinate the polymerization and molding operations. The reactor (probably using bulk polymerization techniques) will often need to be small but highly flexible in operation. The operators for such a unit will need to understand the factors that affect the quality and physical properties of polystyrene.

The suggestion has been made of using a combination of cationic and suspension polymerizations (44). A low-molecular-weight polystyrene is produced by cationic polymerization; it is then dissolved in styrene, and the mixture is polymerized in a suspension process to produce a polystyrene that has improved molding characteristics. This or similar techniques of blending polymers appear to be practical for production of at least certain speciality polystyrenes.

Although currently not of commercial importance, at least two unique types of polystyrene may find applications. First, isotactic or stereospecific polystyrenes have unique properties, and the polymerization processes involving coordination catalysts are of at least latent commercial interest (28). Second, for the preparation of polystyrenes with very narrow molecular-weight distributions, certain anionic polymerizations can be used (32).

Some research is currently in progress to develop new processes. A unique process developed by BASF employs a falling-drop principle in the polymerization vessel (61). The liquid styrene containing dissolved sodium naphthenate and tetrahydrofuran is sprayed downward into a large towerlike reactor. As the droplets settle, polymerization occurs and part of the styrene vaporizes. Good temperature control is maintained because of the partial vaporization of the styrene, and this process may find commercial application.

Polymerization technology and processes are available for sale or licensing from at least nine companies (60).

III. COMMERCIAL PROCESSES FOR STYRENE COPOLYMERS

Copolymers for which styrene is the major comonomer are produced in large quantities since their physical properties are better for numerous applications than those of the homopolymers of styrene (6, 9, 22, 28, 103). Both random and graft copolymers are of importance, and several olefins are used as comonomers with the styrene. Considering first the random copolymers, acrylonitrile is employed to produce copolymers with improved heat-distortion temperatures, improved strengths, and improved resistances to hydrocarbons. These copolymers are also transparent, have better craze resistance, and are relatively tough. Copolymers (or terpolymers) with α-methylstyrene have higher deformation temperatures because of stiffening of the polymeric chain. Glasslike copolymers with good light stability are prepared using methyl methacrylate as a comonomer. Maleic anhydride is used to produce copolymers having acid groups, and the resulting copolymers are employed in epoxy and coating resins. Latex paints sometimes contain copolymers prepared from styrene and butadiene.

Impact polystyrenes and ABS plastics are styrene-type copolymers of major importance, some graft copolymerization often occurs, and each material contains two solid phases. An elastomeric or rubber phase is dispersed throughout a solid matrix consisting primarily of polystyrene or a styrene copolymer (see Fig. 8-8 for micrographs). Factors affecting the physical properties of a two-phase plastic are considerably more complex than those for a single-phase one (101). Variables of importance for the continuous phase include the average molecular weight, molecular weight distribution, and the composition if it is a copolymer. Variables of importance for the elastomeric phase are the number, size, distribution of sizes, and shapes of the dispersed particles. In addition, the composition (since it is often a copolymer), degree of

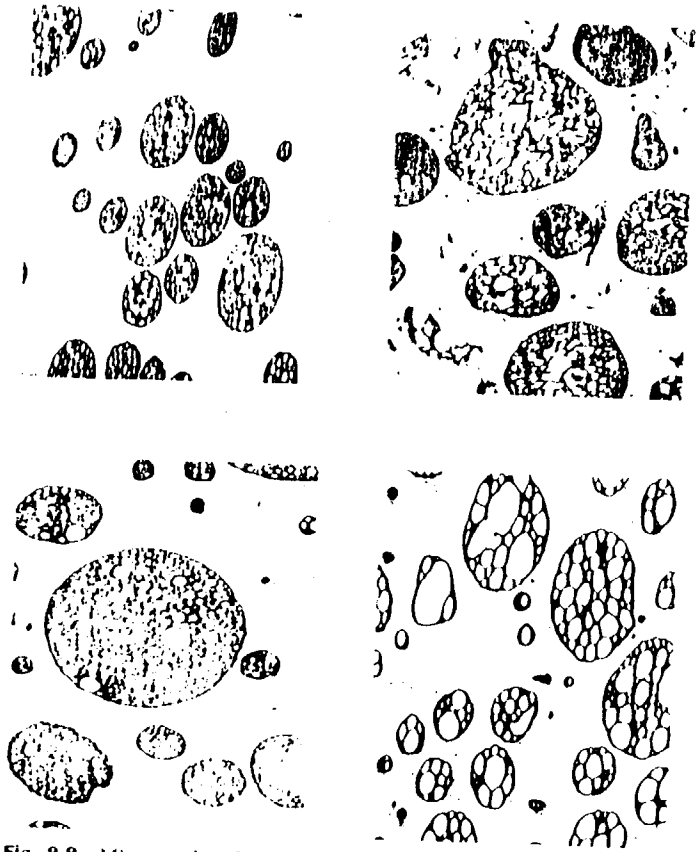

Fig. 8-8 Micrographs of four commercially available impact styrenes. (*The Dow Chemical Co.*)

grafting on the elastomeric molecules, and amount of cross-linking all have a significant effect on the properties.

For random-type copolymers, the two or more comonomers react, forming a chain molecule in which the repeating groups are distributed randomly along the chain. Several features of the molecular structure affect the physical properties. These include the average molecular weight, molecular-weight distribution, composition (or ratio) of repeating units in chain, range of compositions (since the compositions may change as polymerization progresses), and possible branching and cross-linking of polymer chains. Manufacturing techniques employed to produce these many copolymers are unusual in several cases, especially for the two-phase polymers.

Production of Impact Polystyrenes

Impact polystyrenes, or, as they are sometimes called, rubber-modified polystyrenes, are produced by several techniques, but the main ones are outlined in Fig. 8-9. Mass (or bulk) polymerization is always employed for the prepolymerization or the initial stages of polymerization of the processes shown in Fig. 8-9. The final stages of polymerization may be by either bulk (or modified-bulk) or suspension methods. In these processes, some styrene is graft-polymerized on the rubber, and less rubber is needed for the desired impact properties compared with other processes (not shown in Fig. 8-9), in which the rubber and polystyrene are mechanically blended. The impact polystyrenes always consist of two phases (see Fig. 8-8), a polystyrene phase (preferably the continuous one) and a rubber phase, which is dispersed. The properties

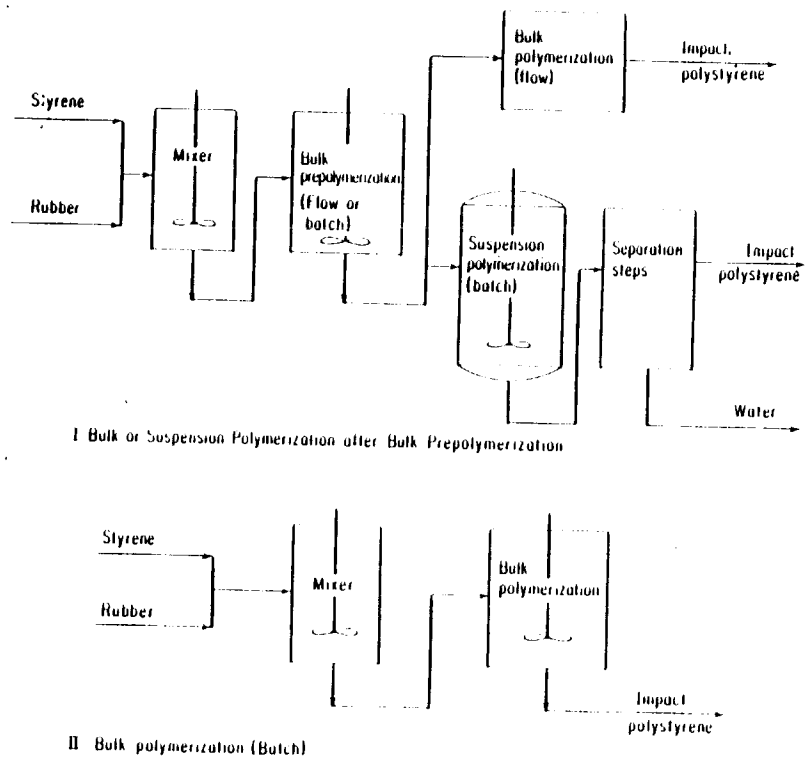

Fig. 8-9 Process outlines for impact polystyrenes.

of the final polymer vary significantly depending on the geometrical configuration of the two phases (89).

Impact polystyrenes are sometimes characterized as medium-impact, high-impact, or even extra-high-impact polystyrenes, depending on the impact strength of the polymer. In general, a higher strength is obtained when more rubber is incorporated in the polystyrene. High-impact polystyrenes generally contain about 5 to 10 percent rubber, whereas extra-high-impact ones contain up to 25 percent (22). The method employed for incorporating the rubber in the product is also important.

Impact Polystyrenes Containing Graft Copolymers A solution of rubber dissolved in styrene is the feedstock used for production of impact polystyrenes containing graft copolymers, and it is prepared in a mixing tank (see process outline I or II of Fig. 8-9). Rubber crumbs are added to the styrene, and a solvent such as ethylbenzene is also sometimes added in relatively small amounts. The mixture is then agitated at room temperature for several hours until most if not all of the rubber is dissolved; and finally the solution, which looks like mineral oil and has the same viscosity, is filtered to remove any undissolved rubber (92). The rate and degree of dissolution of course depend on the amount and type of rubber used and the condition and size of the rubber crumbs.

Polymerization of Solutions of Rubber Dissolved in Styrene: The phenomena occurring during polymerization of styrene-rubber solutions are complicated since two phases form after about 6 to 10 percent of the styrene has polymerized (92). A polystyrene phase (consisting of polystyrene and dissolved styrene) separates as small droplets and is dispersed throughout the rubber phase (initially a liquid phase of rubber dissolved in styrene), as shown in the upper left micrograph of Fig. 8-10. As polymerization continues, styrene reacts by one of the following methods:

1. It polymerizes to form polystyrene, causing the polystyrene phase to grow in volume. This method is normally the predominant one.
2. It copolymerizes to form grafts or branches on the rubber molecules. The resulting graft copolymers presumably accumulate mainly at the interface between the two phases, and they act to some extent as emulsion or dispersion stabilizers (28).

As polymerization occurs, some of the styrene transfers from the rubber phase to the polystyrene phase, which is growing in size. Eventually all or at least most of the styrene polymerizes to form polystyrene or graft copolymers.

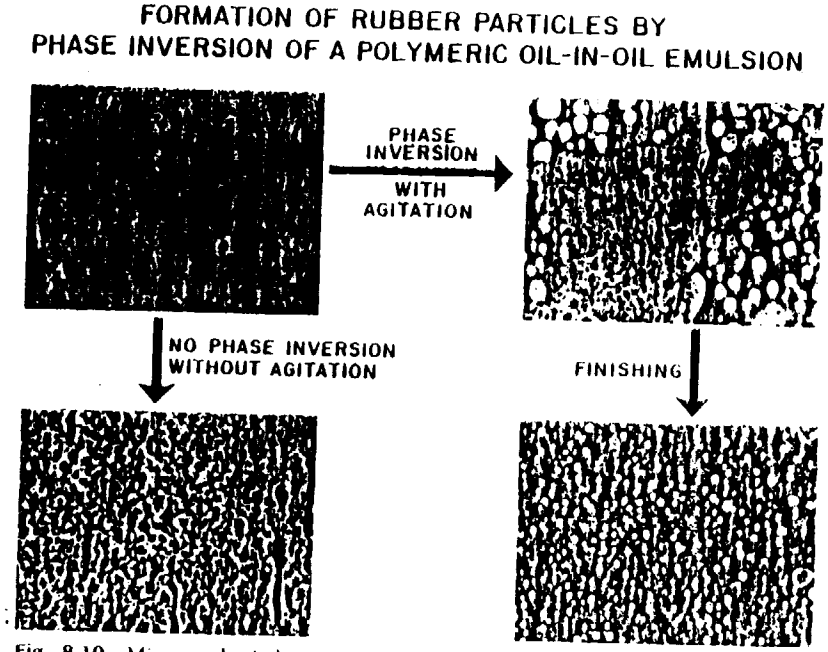

Fig. 8-10 Micrographs indicating two-phase behavior as a styrene-rubber mixture is polymerized, with and without agitation. (*The Dow Chemical Co.*)

The polystyrene phase increases in weight (and volume) rather rapidly, especially during the initial stages of polymerization. The rubber molecules also increase somewhat in weight because of graft polymerization. When a feedstock containing 5 percent rubber and the remainder styrene is used, the ratio of the rubber phase to the polystyrene phase is about 4 for a styrene conversion of 5 percent (92). This ratio decreases with further polymerization and is essentially 0.5 for styrene conversions of 15 to 30 percent.

A key phenomenon that has a most important effect on the properties of final impact polystyrenes can be made to occur after about 7 to 12 percent of the styrene has polymerized. Phase inversion occurs with sufficient agitation, as shown in the upper right micrograph of Fig. 8-10, so that the rubber-phase particles are dispersed throughout the polystyrene phase (28, 92). The minimum level of agitation (or shear rate) required for such an inversion increases as the rubber concentration in the reaction mixture increases (81). The type of agitator used is important since shear rates tend to be quite nonuniform throughout the reaction mixture. After inversion and with continued polymerization, the

micrograph of the final impact polystyrene is like that in the lower right corner of Fig. 8-10.

The level of polymerization for phase inversion varies somewhat with the amount and type of rubber used in the feedstock and with the operating conditions. When the phases invert, the apparent viscosity of the emulsion suddenly decreases since the viscosity of the polystyrene phase is considerably less than that of the rubber phase.

With little or no agitation, the rate of phase inversion is negligibly slow because of the high viscosity of the rubber phase. In such a case, the rubber phase then remains primarily as the continuous phase with a spongy network (see Fig. 8-10). The desired physical properties of the final polymer are realized for most applications only if phase inversion has occurred. Some multiple inversions also form, especially if only moderate agitation is provided; in this case, small particles of polystyrene remain occluded in the dispersed rubber phase.

Immediately after phase inversion, the dispersed droplets of rubber plus dissolved styrene have a relatively large size. With continued polymerization, some dissolved styrene polymerizes to form polystyrene that remains occluded in the rubber phase, but most of it transfers to the polystyrene phase. The dispersed rubber droplets then decrease in size with continued polymerization, and they are gradually transformed into a solid rubber phase. Some cross-linking occurs in the rubber, especially when polymerization is almost completed.

Chain-transfer agents, sometimes called polymerization regulators, are generally added to the reaction mixture in order to obtain a polystyrene that has a lower molecular weight. The dimer of α-methylstyrene is often used for this purpose. This dimer, when added in amounts less than 1 weight percent, significantly lowers the viscosity of the reaction mixture especially after phase inversion occurs (28). Phase inversion occurs in addition at slightly lower styrene conversions when the dimer is added. For a styrene solution containing 7 percent polybutadiene, phase inversion was experienced at a conversion of 10 percent (and a viscosity of about 50 P) when no dimer was used. When, however, 0.6 weight percent dimer was used, phase inversion occurred at about 9 percent conversion; the viscosity decreased from about 30 to 15 P because of inversion.

Chain-transfer agents are distributed between the two phases formed (28). The relative amounts in each phase vary as polymerization progresses and as the relative volumes and composition of the phases change. Changes in the concentrations of the transfer agents in each phase affect the levels of chain transfer in that phase. Ethylbenzene and other solvents sometimes added to the reaction mixture also act to at least some extent as chain-transfer agents.

Grafting of the polystyrene branches on the rubber polymers probably occurs by at least two methods (28, 80). First, styrene copolymerizes to some extent with the unsaturated groups of the rubber molecule. Such copolymerization leads to some cross-linking and three-dimensional polymers in the rubber phase. Cross-linking is more common at higher temperatures, frequently employed during the later stages of bulk polymerization. Second, grafting can occur after a chain transfer step with the rubber in which the free radical is transferred to a carbon atom alpha to an unsaturated group; the carbon-hydrogen bonds of the methylene groups in the alpha positions are relatively weak, allowing easy chain transfer. The length of polystyrene-type graft depends on the concentrations of the styrene and chain-transfer agents in the rubber phase.

The dissolved rubber in styrene has more effect than just dilution relative to the rate of the styrene polymerization (28). The rubber often decreases the overall rate, presumably because of stabilizers or impurities in the rubber or because of degradative chain transfer steps with the rubber. Hence the type of additives used in the feedstock recipes may have a significant effect.

Bulk-Polymerization Processes for Impact Polystyrenes: Both continuous-flow and batch processes involving bulk-polymerization techniques have been used for commercial production of impact polystyrenes, as outlined in Fig. 8-9. These processes are similar to those used for general-purpose (or crystal) polystyrenes.

The continuous-flow process employed by The Dow Chemical Co. (42, 54, 63, 70) uses a combination of three reactors, arranged in series (Fig. 8-3*b*). Small amounts of solvent are added, and the process is sometimes referred to as a solvent process. It is used by several American companies and at least one British one.

The feedstock reported for one Dow unit was 2,200 lb/h of a solution containing 5.5 percent polybutadiene and the remainder styrene. In addition, 220 lb/h of ethylbenzene (as a solvent to lower viscosity) plus small amounts of white mineral oil (as a lubricant and plasticizer), 2,6-di(*tert* butyl)-4-methylphenol (as an antioxidant), and the dimer of α-methylstyrene (as a polymerization regulator) were continuously introduced to the reactors. With their three-tower arrangement, polymerization was completed within about 14 to 15 h residence time as the temperature of the reaction mixture increased from about 112 to 165°C in the reactors (63). At these temperatures, polymerization is initiated by thermal reactions of the styrene, and a free-radical initiator is not needed.

The product mixture from the last tower reactor passed through a tubular heat exchanger. Here the mixture was heated to 220 to 285°C

for about 10 to 30 min, resulting in some cross-linking in the rubber phase but not enough to render the polymer thermosetting (or nonthermoplastic). The rubber is in a sense vulcanized by this technique. In an example reported, the temperature was raised to 235°C. Following heating, the polymeric material was devolatilized to remove ethylbenzene, unreacted styrene, and other volatile compounds. The rubber-modified polystyrene produced by this process has the rubber dispersed in particles ranging in size from about 2 to 25 μm (63).

A Czechoslovakian process also employs three polymerization vessels arranged in series (73) and is somewhat similar to the Dow process. Feedstocks for this process contain 6.5 to 8.5 percent rubber dissolved in styrene. Small amounts of required additives are also introduced continuously into the feedstream. Utilities required per metric ton of product are 2,000 kWh of electricity, 1,750 lb of steam at 6.5 atm pressure, 13,250 gal of cooling water, 10,000 gal of pure water, nitrogen, and compressed air. Costs of these utilities probably total about 1 cent per pound of product.

Batch reactors were used several years ago for the production of most impact polystyrenes, and they still are used to a limited extent. A cylindrical reactor that proved to be highly successful is provided with several internal pancake coils so that good temperature control is maintained during the entire batch run. These coils are positioned with their centers at the axis of the reactor, and they are arranged parallel to each other. Heavy-duty agitators are provided in the spaces between coils, and a batch run is normally completed in 12 to 18 h. In general, batch processes can no longer compete economically with the modern flow processes, especially since the amounts of product are now so large.

Suspension-Polymerization Processes for Impact Polystyrenes: Large amounts of impact polystyrenes are produced using a bulk-polymerization technique for the prepolymerization stages of the reaction and a suspension-polymerization technique for the remainder of the reaction (Fig. 8-9).

Patents (98, 99) assigned to Monsanto Company give examples in which styrene-rubber mixtures containing 6 weight percent rubber are used as feedstocks. Small amounts of an initiator such as di(*tert*-butyl) peroxide, an antioxidant, a C_{12} mercaptan used as molecular-weight modifier, and a refined hydrocarbon oil used as a lubricant and plasticizer are also added to the feedstock. In this process, a solvent is not normally added as in the Dow process. The prepolymerization is accomplished in stirred autoclaves probably in most cases batchwise. Sufficient conversion (probably in 10 to 18 percent range) of styrene occurs and adequate agitation is provided so that phase inversion occurs; i.e., the polystyrene phase becomes the continuous one. A semicontinuous process has also been patented (74) in which only part of the prepolymerized mixture is removed from the autoclave for each suspension run. Because of the initiator used, prepolymerization is completed in several hours.

Following prepolymerization, the prepolymerized solution is added to a suspension-polymerization reactor, where a water-continuous suspension is formed with the prepolymerized solution dispersed throughout it. A recipe reported contains 100 parts (by weight) of prepolymerized solution, 200 parts of water, 0.25 part of surfactant, 0.15 part of calcium chloride granules that dissolve in the water, and 0.25 part of a copolymer of acrylic acids and other acrylate comonomers (98). The copolymer lowers the pH to the preferred range of 3 to 4.

As little as 100 parts of water per 100 parts of prepolymerized solution has been used in other recipes (28). The water is often heated before being added to the reactor, and the method of adding the reactants is important. The prepolymerized mixture, initiator, and water are added to the reactor, and agitation is started with temperatures up to at least 110°C. Then the dispersing agent and the copolymer of acrylic acids and acrylate comonomers are added next. Polymerization then continues. In an example presented, the reaction mixture is first maintained at 130°C for 3 h and then at 140°C for 5 h. When the polymerization mixture is centrifuged, the solid polymer particles contain only 7 percent water.

The suspension recipes used commercially are generally highly proprietary since recipe changes often result in small but significant changes in the polymer properties or the cost of polymerization. Polyvinyl alcohol has also been used as a stabilizer (100), and various types and levels of initiators are used to affect the rates of polymerization. The temperature of course also affects the rates of initiator decomposition and hence the overall rates of polymerization. At the temperatures normally employed, thermal initiation is also a factor. Temperatures from about 90 to 140°C have been reported with times required for the batch polymerization varying from 2 to 8 h.

When impact polystyrenes containing relatively high amounts of rubber, perhaps 10 percent and greater, are to be produced, suspension-polymerization methods are probably preferred. Reaction mixtures for such products do not handle easily in the bulk flow process since they tend to have higher viscosities unless larger amounts of solvent are used.

Impact Polystyrenes Using Mechanical Blending Two mechanical-blending techniques are used to a limited extent for the production of impact polystyrenes. In the first, polystyrene and rubber emulsions, each prepared by emulsion polymerization, are mixed for at least several minutes (96). The mixed polymers are then precipitated, sometimes

using hot ethanol, and the solid polymers are recovered by filtration or centrifuging. The solids are then washed, dried, and pelletized or molded. In the second method, polystyrene and a rubber are mechanically mixed using a Banbury mill, blending rolls, or extrusion equipment.

When the rubber and polystyrene are mechanically blended, higher rubber contents up to perhaps 20 to 30 percent are required in order to obtain the desired impact properties. Because of the larger amounts of rubber employed, surface characteristics of the polystyrene are only fair and the polystyrene has poorer aging characteristics. The dispersed rubber particles in this case have rather irregular and noncircular cross sections (22, 89). The particle sizes vary with the amount of thermomechanical working provided during mixing. Care must be taken during working to prevent overheating, which would degrade the polymers.

The cost of preparing mechanical blends of polystyrene and rubber are generally rather high. Furthermore the physical properties of these blends are only fair as a rule. As a result, it is not surprising that relatively small amounts of impact polystyrenes are currently prepared by mechanical blending.

Types of Elastomers for Impact Polystyrenes Several types of rubbers have been used for production of impact polystyrene including styrene-butadiene random and block (93) copolymers, polybutadiene, nitrile-type rubbers (primarily copolymers of butadiene and acrylonitrile), and recently EPDM (ethylene-propylene-diene copolymers) rubbers (76). Properties of impact polystyrenes are affected by the characteristics and chemical structure of the rubber (63, 80), including its color, residual amounts of unsaturated groups, Mooney viscosity (related to the average molecular weight), molecular-weight distribution, and relative amounts of cis, trans, and vinyl unsaturated groups in the rubber. As discussed earlier, the rubber should preferably be readily soluble in the styrene. EPDM rubbers are often quite insoluble, but a high degree of unsaturation promotes solubility. Special techniques that have not been published are probably required when EPDM rubbers are used.

The moisture, ash, and organic acid contents of the rubber affect the color, clarity, and stability of the final polymer (80). Because of the improved quality required for the rubbers, considerable attention must be given to their manufacture. As a result, the costs of the rubbers used for rubber-modified polystyrene are higher than rubbers used for tires and most other purposes.

Costs for producing rubber-modified polystyrenes are higher than those for general-purpose polystyrene because the rubber itself is fairly expensive and the feedstock solution of rubber in styrene must be prepared. Operating costs for the impact polystyrenes are generally 1.5 to 3.0 cents/lb greater than the general-purpose grades. The additional cost depends to some extent on the amount and type of rubber used. Especially for plants with capacities of over 50 million lb/year, total operating costs for continuous-flow process are often 0.5 cent/lb cheaper than those of batch processes, including suspension processes.

Production of SAN Copolymers and ABS Plastics

SAN (or PSAN)* copolymers and ABS plastics are related since SAN copolymers are the matrix (or continuous phase) in ABS plastics. A rubber phase is the dispersed phase in ABS plastics. Certain portions of the manufacturing procedures are often similar for the two types of polymers.

SAN copolymers are the polymerization products of styrene and acrylonitrile in which the styrene content varies from about 63 to 90 percent. The range for obtaining the best physical properties is generally from 65 to 80 percent (103). Resistance of the SAN copolymers to solvents including motor oils, kerosene, gasoline, and greases is good in this range. Significant improvements are realized for the flexural, impact, and tensile strengths over those for general-purpose (crystal) polystyrenes. Maximum values are obtained for the flexural, impact, and tensile strengths when the styrene contents of the copolymers are about 70, 70, and 66 percent, respectively. The copolymers are transparent but have a slightly yellow cast that becomes darker as the acrylonitrile content increases.

SAN copolymers and ABS plastics account for slightly more than 7.5 percent of the styrene currently used in the United States (12). Production of these two plastics is growing rapidly and is considerably over 0.6 billion lb/year. Because of their excellent physical properties they find wide uses for piping and plumbing, automotive parts, furniture, appliances, eating utensils, telephone housings, and sporting gear, including football and motorcycle helmets.

Bulk, emulsion, and suspension processes are used commercially for the copolymerization of styrene and acrylonitrile (9).

Bulk Processes for SAN Copolymers Bulk processes (or modified bulk processes sometimes called solvent processes since a small amount of solvent is added) are used for production of SAN copolymers. These processes are related to some extent to processes previously described for general-purpose polystyrenes. Bulk copolymerization of most mixtures of styrene and acrylonitrile has two complicating features, however.

1. The relative reactivities of the two comonomers vary except for mixtures that contain about 72 weight percent styrene (103). This com-

* Styrene acrylonitrile (or polystyrene acrylonitrile).

position depends to some extent on the temperature and other reaction conditions. In general for mixtures containing more styrene, the acrylonitrile is more reactive. The reverse is true for mixtures with less styrene. Hence as the level of polymerization increases for mixtures other than those containing 72 percent styrene, the compositions of the unreacted comonomer mixture and of the copolymers change.

2. SAN copolymers tend to have rather high softening temperatures and hence high viscosities compared with homopolymers of styrene. Sufficiently low viscosities are obtained by the use of fairly high temperatures, about 130 to 180°C; the addition to the reaction mixture of fairly large amounts of inert solvents such as ethylbenzene, chlorobenzene, benzene, toluene, or methyl ethyl ketone (88, 104); and/or only partial polymerization of the reaction mixture. In the latter case, the unreacted comonomers act as solvents for the copolymers. With copolymer contents in the reaction mixture up to 40 percent, the viscosities at reaction temperatures are generally quite low.

Ease of molding and the physical properties of the SAN copolymers are affected to a considerable extent by the polymerization temperatures, usually 130 to 180°C (103). At lower temperatures, the molecular weight of the copolymers is very high, often too high for easy molding. Furthermore, the rate of polymerization is low. At higher temperatures, the product is weak and brittle since it has a low molecular weight.

The effectiveness of obtaining chain-transfer steps with common chain-transfer agents varies significantly as the composition of the styrene-acrylonitrile mixture changes (28). When the mixture becomes richer in acrylonitrile, the molecular weight of the copolymer often decreases rapidly. As indicated earlier, the composition of the mixture often changes during batch polymerizations, resulting in a broad spectrum of molecular weights.

A continuous-flow process for the production of numerous copolymers including SAN copolymers has been reported (84, 85, 103), and a simplified flowsheet in which a tubular loop is used as the main reactor is shown in Fig. 8-11. The reaction mixture, containing perhaps 40 percent SAN, is recirculated by a pump many times around the reactor.

Two streams are continually withdrawn from the reactor. One is the product stream, which is sent to the devolatilizer (discussed later). The second stream is combined with the feed and recycle mixtures of comonomers, then passed through a heat exchanger, and eventually returned to the reactor. Key features in the process are to maintain minimum differences of the temperature and composition of the mixture in the reaction system that includes the reactor proper, heat exchanger, and connecting lines. Such restrictions are necessary in order to obtain

copolymers with relatively uniform compositions and molecular weights since copolymerization occurs throughout the entire system. To obtain minimum temperature and composition differences, a recycle loop is provided around the heat exchanger. A major operating problem is to obtain rapid mixing of the viscous copolymer-rich solution with the low-viscosity mixtures of comonomers. For normal pumping and mixing, viscosities of 5,000 cP or less are desired for the reaction mixture. Process controls for this process have been described (84, 104).

Two other reactor modifications have been reported (85). In one modification, a heat exchanger was employed with provisions to recirculate the reaction mixture on the average of about 800 passes per hour using a recycle pump. In yet another modification, a stirred and jacketed autoclave was found satisfactory.

For several examples reported for this continuous-flow process (85), several hours were required to reach steady-state operation (including a constant-composition copolymer). The time to reach equilibrium depends on the average residence time of the reactants in the reaction portion of the system. Such residence times depend on the rates of polymerization, and with the styrene-acrylonitrile mixtures normally used, about 1 h is common (103). Increased amounts of acrylonitrile in the reaction mixture increase the rates of polymerization. Design of a suitable reactor requires careful considerations of the flow and recycle patterns and of adequate heat transfer.

The product mixture from the reactor is pumped to a devolatilizer to separate the substantial amounts of unreacted styrene and acrylonitrile from the SAN copolymer. The unreacted comonomers are condensed and recycled. Provisions are normally required to purify these comonomers and to remove by continuous distillation inert diluents that may

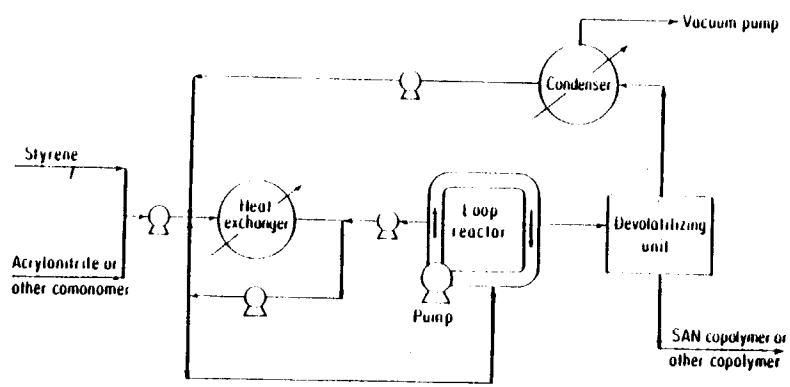

Fig. 8-11 Process for production of SAN or other styrene copolymers.

be introduced in the feedstock. Devolatilizers suitable for the SAN copolymers are similar to those previously described for general-purpose polystyrenes. Recovery and pelletizing the devolatilized copolymer involve conventional processing steps.

SAN copolymers produced by this continuous-flow process can be made with wide variations in composition and yet with excellent homogeneity (or constant compositions) for all polymeric molecules of a specific product. Examples were presented for copolymers with styrene contents varying from about 70 to 92 weight percent (85). Since these copolymers are relatively hygroscopic and are capable of adsorbing up to several percent moisture, special precautions are necessary to prevent moisture pickup during storage. Sometimes the pellets are stored in Saran-lined drums. If the pellets do become wet, they should be dried before fabrication since otherwise streaks will appear on the fabricated parts.

Emulsion and Suspension Processes for SAN Copolymers Emulsion and suspension processes, including both the equipment and operating procedures, for copolymerization of styrene and acrylonitrile are similar to the batch processes described earlier for production of general-purpose polystyrenes.

For suspension copolymerizations, a recipe of Mino (91) specifies the following weights of reactants: comonomers, 100; water, 200; 1-azo-2 bis-1-phenylethane (as initiator), 0.1; *n*-decylmercaptan, 0.1; and calcium hydroxyapatites, 0.2. For SAN copolymers with styrene compositions of commercial interest, about 6 to 7 h is required to complete the copolymerization. Crim (50) in example XVIII of his patent has also outlined the recipe used for production of an SAN copolymer containing 10 percent acrylonitrile.

A complicating feature of these two processes (each of which has water-continuous phases) is that acrylonitrile is soluble, often up to several percent, in the water. The styrene, however, is only very slightly soluble. The actual amount of acrylonitrile dissolved increases of course as the relative amount of water in the two-phase system is increased. It decreases, however, with smaller concentrations of acrylonitrile in the organic phase and hence at higher polymerization levels. As a result, the styrene-to-acrylonitrile ratio in the organic phase is always higher, and especially so at the start of a polymerization run, than the overall ratio of these two comonomers in the polymerization vessel. Since the ratio in the organic phase controls the reaction and hence the composition of the copolymers produced, it is obvious that the compositions and molecular weight of copolymers tend to vary as the batch polymerization progresses, and the copolymer molecules are generally more heterogeneous than comparable bulk-polymerization runs. Mino (91) has shown that the acrylonitrile content of copolymers produced by suspension technique may vary by at least several percent, depending on the conversion level. If a specific copolymer is too heterogeneous in character, the copolymer molecules may be sufficiently incompatible with each other to result in partial loss of light transmission, resulting in haziness (28).

Recovery of SAN copolymers that have been prepared by emulsion or suspension processes is similar to that for general-purpose polystyrenes produced by the same method.

Production of ABS Plastics Several methods for production of ABS plastics (77, 94) are outlined in Fig. 8-12. In older and now less important methods, an SAN copolymer is mechanically blended with a rubber, often a nitrile rubber; generally water emulsions of these two copolymers are prepared and then blended. Newer ABS production procedures involve the polymerization of a mixture of rubber (often polybutadiene), styrene, and acrylonitrile using emulsion, bulk, and suspension-polymerization techniques. Part of the styrene and butadiene polymerizes to form grafted branches on the polybutadiene chain, and part reacts to form SAN copolymers. Additional SAN copolymer is sometimes mechanically blended to form the final ABS plastic.

Rubber Latices for ABS Plastics: Rubber latices used for production of the ABS plastics are normally prepared by relatively standard batch-operated emulsion-polymerization processes. Details of such processes are presented by Whitby (102), who has presented recipes for the preparation of nitrile rubbers that often contain up to 35 percent acrylonitrile and the remainder butadiene. The effect of operating conditions on the reaction and on the properties of the rubber was also discussed. Latices containing perhaps 30 to 35 percent rubber are common, and they are produced at about 5 to 50°C.

When butadiene polymerizes by a free-radical mechanism, as during emulsion polymerization, the butadiene can add to the growing polymer chain by trans-1,4, cis-1,4, or 1,2 additions. In the latter case a side vinyl branch is present on every other carbon atom of the chain. The relative fraction of these three addition methods has a considerable effect on the properties of the polybutadiene. Binder (71) has reported such information for a large number of polybutadienes polymerized by standard emulsion-polymerization techniques at temperatures from 5 to 70°C. The initiator and surfactant used were found to affect the addition of butadiene to the chain, but temperature generally had a greater effect. The cis-1,4 additions generally increased from about 5 to 20 percent as the temperature was raised, the trans-1,4 additions decreased from approximately 80 to 60 percent, and 1,2 additions increased slightly from 15 to 20 percent.

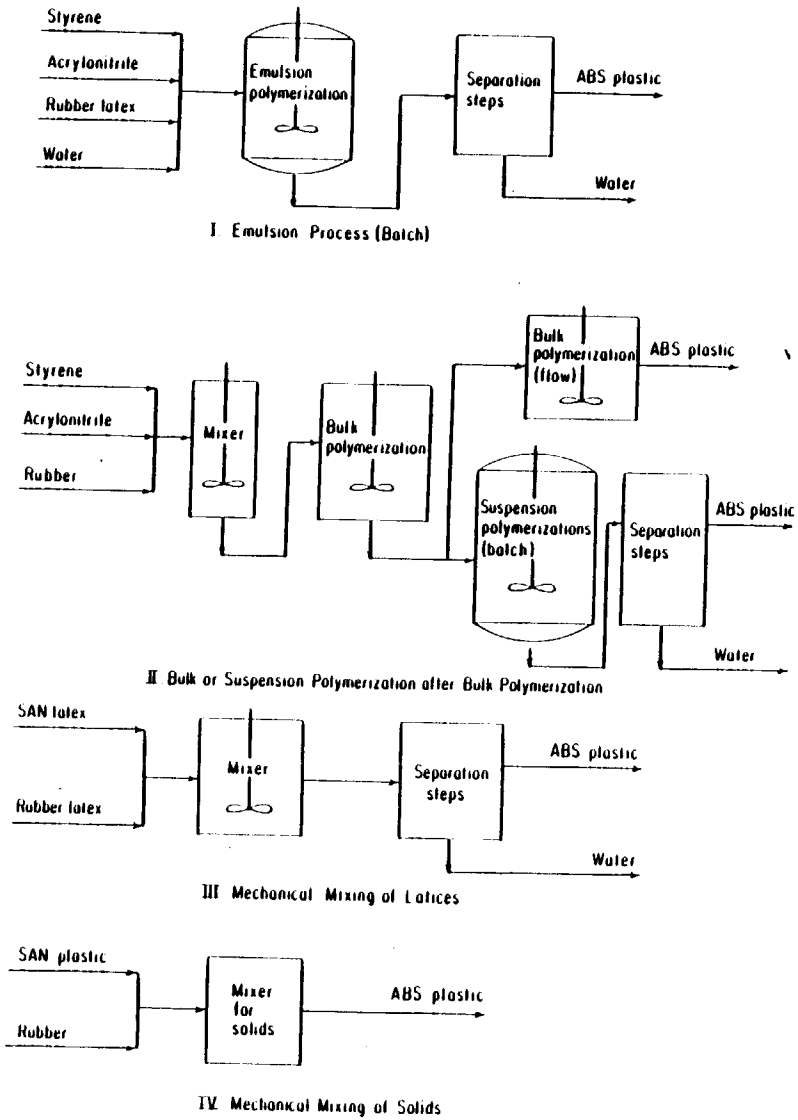

Fig. 8-12 Process outlines for ABS plastics.

A recipe used by Union Carbide Corporation (82) for production of polybutadiene in their ABS process was as follows: 100 parts butadiene, 200 parts water, 3 parts sodium oleate, 10 parts carbon tetrachloride (used as a molecular-weight modifier), and 0.5 part $K_2S_2O_8$.

Considerable modifications have occurred within the last several years in emulsion-polymerization techniques for butadiene and other dienes. New recipes have been developed that allow rather large changes in the kinetics of polymerization and the chemical characteristics (and hence physical properties) of the rubber molecules. Some cross-linking and ring formation always occur during polymerization, particularly at higher levels of polymerization. For this reason, polymerization is frequently stopped at conversion levels from about 70 to 90 percent.

The size of the dispersed particles of rubber in the latex is of importance, especially when two or more latices are to be blended in the preparation of an ABS plastic (or of an impact polystyrene). The size of particles in the latices will affect the size of rubber particles in the final product. Hence in preparing a rubber latex, it is important to consider those factors, including the recipe and the operating variables, which affect not only the polymerization steps but also the characteristics of the latex formed. The amount of surfactant, for example, is highly important in this respect.

Although continuous-flow polymerization processes are employed for the manufacture of rubbers for tires, a batch system is undoubtedly always used for the rubbers incorporated into ABS plastics. The production capacity required and the relatively large number of latices needed do not justify flow processes.

Emulsion Processes for ABS Plastics: Emulsion polymerization processes are widely used for the production of newer and often improved varieties of ABS plastics in which styrene-acrylonitrile copolymers are grafted to the rubber (see Fig. 8-12). Styrene and acrylonitrile are added to the rubber, often a polybutadiene, latex. The reactants used by Borg-Warner Corp. (72, 87) for one of their plastics are as follows on a weight basis: rubber latex on a polybutadiene equivalent, 30; acrylonitrile, 25; styrene, 45; cumene hydroperoxide (an initiator), 0.75; sodium salt of hydrogenated disproportionated rosin, 2.0; sodium pyrophosphate, 0.5; sodium hydroxide, 0.45; dextrose, 1.0; ferrous sulfate, 0.01; and total water, including that in original latex, 160. The mixture polymerized within about 6 h when heated to about 65 to 85°C.

The ABS plastic from the above latex is recovered by coagulation with dilute brine, such as sodium chloride, and with sulfuric acid. The slurry is then heated to 95°C to promote granulation (or agglomeration) of the particles. The solids are then separated by filtration (or possibly

centrifuging), are water-washed, and finally dried. The equipment and operation procedures are in general similar to those for production of homopolymers of styrene by emulsion-polymerization processes.

Relatively large variations of the recipes used for the final copolymerization step are possible. Such changes affect the rates of polymerization, the operating variables required, and/or the methods of ABS plastic recovery to at least some extent.

Bulk Processes for ABS Plastics: Bulk processes similar to those described earlier for the production of impact polystyrenes are also suitable for the production of ABS plastics (9) (see Fig. 8-12). The modified bulk process using small amounts of solvents such as ethylbenzene (70), described earlier for the production of general-purpose (crystal) polystyrenes and impact polystyrenes, is such a process. In this case, the rubber, usually polybutadiene, is dissolved in a mixture of styrene, acrylonitrile, and often some ethylbenzene. The combined mixture is prepolymerized to 20 to 40 percent with agitation to obtain phase inversion. The polymerization is completed in agitated tower reactors.

An important advantage of this bulk process, compared with the emulsion process, is that a wider range of rubbers, including *cis*-polybutadiene and other rubbers produced by solution processes using Ziegler or other solid catalysts, can be employed.

Suspension Processes for ABS Plastics: Grafted ABS plastics can also be produced by suspension processes (9) (Fig. 8-12) similar to those used for impact polystyrenes. A solution of rubber in styrene and acrylonitrile is first prepolymerized in a bulk system with agitation to obtain phase inversion, and then polymerization is continued in a suspension with water as the continuous phase. The types of ABS plastic that can be produced are similar to those produced by the bulk processes.

Mitsui Toatsu Chemicals have recently developed a suspension process for producing a plastic that is related to an ABS plastic but is not one since it apparently contains no butadiene (76). For the rubber, they use EPDM terpolymers (of ethylene, propylene, and a diene that is presumably a nonconjugated one). EPDM is highly resistant to oxygen and weather attack, compared with rubbers produced primarily from butadiene and isoprene. The claim has been made that the key point was to learn how to graft a branch onto the linear rubber molecule, but the method used has not been published. Part of the acrylonitrile and styrene forms a graft copolymeric branch on the terpolymer, and the remainder forms free SAN copolymers. The new plastic is said to have better weather resistance than conventional ABS plastics.

Mechanical Blending of Rubber and SAN Plastics: The most common method for blending rubber and SAN copolymer is to employ latices

of each, as shown in Fig. 8-12. Uniroyal at their Baton Rouge plant use large head tanks constructed of 304 stainless steel. The level of agitation, the temperature, and the time for mixing are all important in blending these two latices. Such conditions affect the dispersion of the rubber phase in the finished plastic. The method of coagulation is also important for the same reason. Uniroyal uses a large flash dryer constructed of 304 stainless steel for drying the wet product after it has been washed.

The first ABS plastics produced in the late 1940s were manufactured by blending SAN plastics and nitrile rubbers on rubber mills in a ratio of approximately 65:35 at temperatures of 150 to 200°C (79). It is doubtful if such milling operations (Fig. 8-12) are of much current importance for production of the basic ABS plastic. However, melt mixing of graft ABS plastics with additional SAN copolymers is still important as a method for varying the physical properties of the final ABS plastic.

Process Considerations for ABS Plastics: The ratios, or relative amounts, of comonomers to be used for ABS plastic production vary over wide ranges, depending on the specific plastics being produced. The relative amounts of acrylonitrile (A), butadiene (B), and styrene (S) employed often are in the ranges of 20 to 30 percent, 6 to 35 percent, and 45 to 70 percent, respectively. Other comonomers sometimes used include methacrylonitrile, isoprene, and α-methylstyrene (9, 22).

Manufacturing variables, as already indicated, affect the geometry of the dispersed rubber phase in the ABS plastics. Key parameters describing the chemical and physical characteristics of the plastics are discussed by Weaver (101). As a rule, the plastics have an excellent blend of toughness, tensile strength, and creep resistance. In general, more rubber or butadiene content results in a higher impact resistance but lower hardness, tensile strength, and heat-distortion temperature. More acrylonitrile improves chemical resistance, tensile strength, and heat-distortion point.

Compatibility or chemical similarity of the resin and rubber is a key factor in obtaining desirable impact strengths for ABS plastics (101). Graft copolymerization of styrene-acrylonitrile branches on the rubber molecules tends to make the rubber phase much more compatible with the SAN phase. For ABS plastics formed by mechanical blending techniques, in which no grafting occurs, a nitrile rubber is normally preferred since it is much more compatible with the SAN resin than a polybutadiene rubber.

The properties of ABS plastics are sometimes modified and even improved, particularly in the case of impact resistance, by blending ABS

plastics with other polymers including polyvinyl chlorides, polycarbonates, or polyurethanes to produce the so-called ABS alloys.

Production of Styrene-Butadiene Copolymers

Copolymers of styrene and butadiene containing 50 percent or more styrene are of considerable commercial importance. The estimated production capacities of 13 American companies was 440 million lb/year by 1969 (12), and it is probably larger at present. These copolymers have properties that are often intermediate between a plastic and an elastomer.

Copolymers containing about 60 percent styrene find large uses in latex paints. The latices are prepared by batch emulsion-polymerization techniques similar to those used for making styrene-butadiene synthetic rubbers, which are of major importance. Sometimes other comonomers such as alkyl acrylates or acrylic acid are also added to the reaction mixture. These latter comonomers are highly polar and improve the adhesive characteristics of the resulting copolymers.

Block copolymers of the type S—B—S are produced from styrene and butadiene by Shell Chemical Company (86, 97); B refers to a block of polybutadiene and S to one of polystyrene.

In a Shell process, a solvent such as benzene and part of the styrene to be used are added to a stirred autoclave. The catalyst is added, and the styrene polymerizes. With a *sec*-butyllithium catalyst, a temperature of 40°C is suitable. Then butadiene (or isoprene for certain other copolymers) is added. Polymerization is continued until the diene is essentially all reacted. The remaining styrene is next added, and polymerization is continued until the styrene is almost depleted. By such a polymerization technique, the butadiene polymerizes to form blocks that are largely *cis*-polybutadiene. In another manufacturing procedure, a dianion is used to initiate the polymerization of butadiene. The resulting B block has an active site on each end. When styrene is added, it polymerizes to form the S—B—S block copolymer.

Block copolymers of styrene and butadiene vary in properties from soft rubbery to hard, semirigid materials. The physical properties vary with the relative amounts of styrene and diene used and with the sizes of the block. In general, more styrene makes a more rigid and harder material. Hydrogenation of various block copolymers is reported to yield tough, clear, heat-resistant polymers (95).

A major use of styrene is for the production of copolymers used as synthetic rubbers, the major one being a copolymer of butadiene and styrene in essentially a 3:1 weight ratio. Discussion of the processes employed for production of these elastomers is beyond the scope of this book.

Production of Speciality Styrene Copolymers

Styrene is used for the preparation of numerous speciality copolymers. In general, the polymerization processes are operated batchwise for these copolymers because of the relatively small production capacities needed. The processes are as a rule very similar to processes already described.

Chlorostyrene is a comonomer that has recently become available on a developmental basis (78). Copolymers of styrene and chlorostyrene have a reduced flammability. Various other chlorinated and brominated comonomers also find use as flame retardants (90). Mechanical compounding with inorganic salts, glass fibers, or organic compounds containing phosphorus, chlorine, or bromine atoms can also be used for this purpose.

Vinyltoluenes, which are closely related to styrene, are employed to prepare copolymers for paint, varnish, and polyester applications. Copolymers using divinylbenzene find important applications in preparing ion-exchange resins; a suspension-polymerization reaction is part of the overall operation (83). Divinylbenzene is also sometimes used in small amounts as a comonomer to increase the heat resistance and strength of the final plastic.

Several copolymers which generally contain more than 50 percent styrene and which find rather large-scale uses are discussed next.

Copolymers Containing α-Methylstyrene Copolymers of styrene and α-methylstyrene are usually produced by emulsion-polymerization techniques (22). Such a process very effectively controls the temperature, which is important since α-methylstyrene increases the heat-deformation temperature of the plastic.

Hanson and Zimmerman (85), however, have reported success in producing copolymers with α-methylstyrene contents from about 10 to 39 percent in their recycle bulk-copolymerization process, described earlier for styrene-acrylonitrile copolymers.

Copolymers with Methyl Methacrylate Copolymers of styrene and methyl methacrylate are used for crystal-clear plastics with good light stability. The copolymers often contain up to 60 percent by weight of methyl methacrylate. Bulk, solvent, suspension, or emulsion techniques can all be used for this copolymerization, but a conventional batch suspension process is probably most common.

Copolymers with Maleic Anhydride Maleic anhydride and styrene are normally dissolved in a solvent such as acetone, benzene, or xylene, and then batch-polymerized at about 50°C in the presence of benzoyl peroxide (75). The comonomers tend to react on essentially an equimolar and alternate basis to form the linear molecules.

The resulting copolymers are rather brittle but are useful in latex

paints, pigment dispersants, floor polishes, and epoxy resins. The anhydride groups can be reacted with glycols or diamines to produce cross-linked resins.

Literature Cited

1. Barrett, G. R., and A. F. Harris (to Monsanto Co.): Process for Polymerizing Styrene, U.S. Pat. 3,222,341 (Dec. 7, 1965).
2. Basdekis, C. H.: Styrene Polymers, W. M. Smith (ed.), in "Manufacture of Plastics," vol. I, pp. 402–436, Reinhold, New York, 1964.
3. Bevington, J. C., G. M. Guzman, and H. W. Melville: Self-Branching in the Polymerization of Styrene, *Proc. R. Soc.*, **A221**: 453 (1954).
4. Bevington, J. C., H. W. Melville, and R. P. Taylor: The Termination Reaction in Radical Polymerization: Polymerization of Methyl Methacrylate and Styrene at 25°, *J. Polym. Sci.*, **12**: 449 (1945).
5. Billmeyer, F. W.: "Textbook of Polymer Science," 2d ed., Interscience, New York, 1971.
6. Boundy, R. H., and R. F. Boyer: "Styrene," Reinhold, New York, 1952.
7. Boyer, R. F.: Styrene Polymers (Physical Properties), in N. M. Bikales (ed.), "Encyclopedia of Polymer Science and Technology," vol. 13, pp. 251–277, Interscience, New York, 1970.
8. Boyer, R. F., and H. Keskkula: Styrene Polymers (Characterization), in N. M. Bikales (ed.), "Encyclopedia of Polymer Science and Technology," vol. 13, pp. 206–232, Interscience, New York, 1970.
9. Boyer, R. F., H. Keskkula, and A. Platt: Styrene Polymers, in N. M. Bikales (ed.), "Encyclopedia of Polymer Science and Technology," vol. 13, pp. 128–135, Interscience, New York, 1970.
10. Brasie, W. C.: Fluid Flow in Polymer Handling Systems, *Chem. Eng. Prog.*, **58**(1): 45 (1962).
11. Brasie, W. C.: Elements of Polymer Engineering, *1968 Professors' Workshop, Midland, Mich., May 1968.*
12. Styrene Forecast, *Chem. Eng. News*, Sept. 22, 1969, pp. 22–25.
13. Duerksen, J. H., and A. E. Hamielec: Polymer Reactors and Molecular Weight Distribution: Free-Radical Polymerization in Steady-State Stirred-Tank Reactor Trains, *J. Polym. Sci.*, **C25**: 155 (1968).
14. Duerksen, J. H., A. E. Hamielec, and J. W. Hodgins: Polymer Reactors and Molecular Weight Distribution: Free Radical Polymerization in a Continuous Stirred-Tank Reactor, *AIChE J.*, **13**: 1081 (1967).
15. Grancio, M. R., and D. J. Williams: Morphology of Monomer-Polymer Particle in Styrene Emulsion Polymerization, *J. Polym. Sci.*, (A-1)**8**: 2617 (1970).
16. Hamielec, A. E., J. W. Hodgins, and K. Tebbens: Polymer Reactors and Molecular Weight: Free Radical Polymerization in a Batch Reactor, *AIChE J.*, **13**: 1087 (1967).
17. Henrici-Olive, G., and S. Olive: Kettenübertragung bei der radikalischen Polymerisation, *Fortschr. Hochpolym. Forsch.*, **2**: 496–577 (1961).
18. Henrici-Olive, G., S. Olive, and G. V. Schulz: Selbstverzweigung und Übertragungsreaktion am Polymeren bei Polystyrol, *Z. Phys. Chem.*, N.F., **20**: 176 (1959).
19. Hui, A. W., and A. E. Hamielec: Polymer Reactors and Molecular Weight Distribution: Free-Radical Polymerization in a Transient Stirred-Tank Reactor Train, *J. Polym. Sci.*, **C25**: 167 (1969).

20. Johnson, R. B.: Polystyrene, *Plast. World*, August 1969, pp. 64–67.
21. Kambour, R. P.: The Role of Crazing in the Mechanism of Fracture of Glassy Polymers, *Appl. Polym. Symp.*, **7**: 215 (1968).
22. Keskkula, H.: Styrene Polymers (Plastics), in N. M. Bikales (ed.), "Encyclopedia of Polymer Science and Technology," vol. 13, pp. 395–425, Interscience, New York, 1970.
23. Keskkula, H., A. Platt, and R. F. Boyer: Styrene Plastics, in A. Standen (ed.), "Kirk-Othmer Encyclopedia of Chemical Technology," 2d ed., vol. 19, pp. 85–134, Interscience, New York, 1969.
24. Lang, J. L. (to Dow Chemical Co.): Process of Polymerizing Monovinyl Aromatic Compounds with Rubber, U.S. Pat. 2,646,418 (July 21, 1953).
25. Natta, G., F. Danusso, and D. Sianesi (to Montecatini): Polymerization of Styrene, U.S. Pat. 3,161,624 (Dec. 15, 1964).
26. Ohlinger, H.: "Polystyrol," Springer-Verlag, Berlin, 1955.
27. Pennwalt Corporation, Lucidol Div.: *Bulletins*, Buffalo, N.Y., 1970.
28. Platt, A. E.: Styrene Polymers (Polymerization), in N. M. Bikales (ed.), "Encyclopedia of Polymer Science and Technology," vol. 13, pp. 156–206, Interscience, New York, 1970.
29. Stein, D. J., and H. Mosthaf: Oligomer Formation in the Thermal Polymerization of Styrene, *Angew. Makromol. Chem.*, **2**: 39–50 (1968).
30. Wehr, H. W., and Nagle, F. B. (to Dow Chemical Co.): Alpha Alkyl Styrene Dimer Polymerization Modifiers, U.S. Pat. 2,732,371 (Jan. 24, 1956).
31. Allen, L., W. R. Marshall, and C. E. Wightman (to Union Carbide Corp.): Continuous Bulk Polymerization of Styrene, U.S. Pat. 2,496,653 (Feb. 7, 1950).
32. Altares, T., and E. L. Clark: Pilot Plant Preparation of Polystyrene of Very Narrow Molecular Weight Distribution, *Ind. Eng. Chem. Prod. Res. Dev.*, **9**: 168 (1970).
33. Anderson, E. V., R. Brown, and C. E. Belton: Styrene, Crude Oil to Polymer, *Ind. Eng. Chem.*, **52**: 550 (1960).
34. Amos, J. L., J. C. Frank, and K. E. Stober (to Dow Chemical Co.): Process of Conducting Exothermic Bulk Polymerization, U.S. Pat. 2,714,101 (July 26, 1955).
35. Amos, J. L., and A. F. Roche (to Dow Chemical Co.): Removal of Volatile Ingredients from Thermoplastic Polymers, U.S. Pat. 2,849,130 (Aug. 26, 1958).
36. Badische Anilin- und Soda-Fabrik (by S. Stadelmann, H. Ohlinger, and H. Mostof): Continuous Bulk Polymerization of Styrene, German Pat. 1,112,631 (Aug. 10, 1961).
37. Basdekis, C. H.: Styrene Polymers, in W. M. Smith (ed.), "Manufacture of Plastics," vol. I, Reinhold, New York, 1964.
38. Basel, L., and J. Papp: Polymerization Procedures, Industrial, in N. M. Bikales (ed.), "Encyclopedia of Polymer Science and Technology," vol. 11, pp. 280–304, Interscience, New York, 1969.
39. Bishop, R. B.: From Styrene to End-Use Item in One Easy Operation, *163d Am. Chem. Soc. Meet., Boston, Mass., 1972.*
40. Bishop, R. B.: Find Polystyrene Plant Costs, *Hydrocarbon Process.*, November 1972, pp. 137–140.
41. Brasie, W. C. (to Dow Chemical Co.): Heat Exchanger Agitator, U.S. Pat. 3,280,899 (Oct. 25, 1966).
42. Production of Polystyrene by Continuous Solvent Process, *Br. Plast.*, January 1957, pp. 26–27.
43. Polystyrene via "Natural" Ethyl Benzene, *Chem. Eng.*, Dec. 1, 1958, pp. 98–101.

44. Cleland, W. J., H. G. Henshall, A. N. Roper, J. M. Waring, and E. Seijo (to Shell Oil Co.): Polymerization of Vinyl Aromatic Compounds, U.S. Pat. 3,052,664 (Sept. 4, 1962).
45. Coulter, K. E., H. Kehde, and B. L. Hiscock: Styrene and Related Monomers, in E. C. Leonard (ed.), "Vinyl and Diene Monomers," pt 2, pp. 479–576, Wiley-Interscience, New York, 1971.
46. DeGraff, A. W., and G. W. Poehlein: Emulsion Polymerization of Styrene in a Single Continuous Stirred-Tank Reactor, *J. Polym. Sci.* (A-2)9: 1955 (1971).
47. Dunlop, R. D., and F. E. Reese: Continuous Polymerization in Germany, *Ind. Eng. Chem.*, 40: 654 (1948).
48. Farber, E.: Suspension Polymerization, in N. M. Bikales (ed.), "Encyclopedia of Polymer Science and Technology," vol. 13, pp. 552–571, Interscience, New York, 1970.
49. Gerrens, H., and K. Kuchner: Continuous Emulsion Polymerization of Styrene and Methyl Acrylate, *Brit. Polym. J.*, 2(1–2): 18–24 (1970).
50. Grim, J. M. (to Koppers Co.): Suspension Polymerization Using Synthetic Calcium Phosphate, U.S. Pat. 2,715,118 (Aug. 9, 1955).
51. Harkins, W. D.: A General Theory of the Mechanism of Emulsion Polymerization, *J. Amer. Chem. Soc.*, 69: 1428 (1947).
52. Hauser, E. A., and E. Perry: Emulsion Polymerization of Styrene, *J. Phys. Colloid Chem.*, 52: 1175 (1948).
53. Hutton, J. L., and R. K. Jessen (T. Shriver and Co., Inc., Harrison, N.J.): personal communications, 1970, 1972.
54. Continuous Thermal Polymerization of Styrene, *Ind. Chem.*, January 1957, pp. 11–14.
55. Jones, E. M. (Monsanto Co., St. Louis, Mo.): personal communication, 1970.
56. Liou, D. W.: Process Simulation and Design of Continuous Flow Reactor, *Ind. Eng. Chem. Div., 161st Meet. Am. Chem. Soc., Los Angeles, 1971.*
57. Lynn, S., and J. E. Huff: Polymerization in a Tubular Reactor, *AIChE J.*, 17: 475 (1971).
58. Mack, W. A. (Werner and Pfleiderer Corp., Walwich, N.J.), personal communication, 1972.
59. McDonald, D. L., K. E. Coulter, and J. L. McCurdy (to Dow Chemical Co.): Process for Mass Polymerization in Vertical Unmixed Strata, U.S. Pat. 2,727,884 (Dec. 20, 1955).
60. Miller, R. L.: Process Technology for License or Sale, *Chem. Eng.*, Apr. 20, 1970, pp. 114–144.
61. Platzer, N.: Design of Continuous and Batch Polymerization Processes, *Ind. Eng. Chem.*, 62(1): 6 (1970).
62. Roe, C. P.: Surface Chemistry Aspects of Emulsion Polymerization, *Ind. Eng. Chem.*, 60(9): 20 (1968).
63. Ruffing, N. R., B. A. Kozakiewicz, and B. B. Cave (to Dow Chemical Co.): Process for Making Graft Copolymers of Vinyl Aromatic Compounds and Stereospecific Rubbers, U.S. Pat. 3,243,481 (Mar. 29, 1966).
64. Smith, W. V., and R. H. Ewart: Kinetics of Emulsion Polymerization, *J. Chem. Phys.*, 16: 592 (1948).
65. Sparrow, R. F. (Marco Development Co., New Castle, Del.): personal communication, 1971.
66. Stark, A. H. (to Dow Chemical Co.): Continuous Polymerization Process, U.S. Pat. 3,007,903 (Nov. 7, 1961).

67. Stober, K. E. (to Dow Chemical Co.): Method for Polymerizing Styrene, U.S. Pat. 2,530,409 (Nov. 21, 1950).
68. Widmer, F.: Behavior of Viscous Polymers during Solvent Stripping or Reaction in an Agitated Thin Film, *143d Amer. Chem. Soc. Meet., Boston, Mass.*, 1972.
69. Wohl, M. H.: Bulk Polymerization, *Chem. Eng.*, Aug. 1, 1966, pp. 60–64.
70. Amos, J. L., J. L. McCurdy, and O. R. McIntire (to Dow Chemical Co.): Method of Making Linear Interpolymers of Monovinyl Aromatic Compounds and Natural or Synthetic Rubber, U.S. Pat. 2,694,692 (Nov. 16, 1954).
71. Binder, J. L.: Microstructures of Polybutadienes and Butadiene-Styrene Copolymers, *Ind. Eng. Chem.*, 46: 1727 (1954).
72. Borg-Warner Corp.: Blends of Polymeric Products, British Pat. 841,889 (July 20, 1960).
73. High Strength Polystyrene, *Brit. Chem. Eng. Process Supp.*, November 1967, pp. 78–79.
74. Brown, R. P., R. H. Dyer, W. M. Mayes, and P. D. Meek (to Cosden Oil and Chemical Co.): Masterbatch Prepolymerization Feed for Suspension Polymerization, U.S. Pat. 3,188,364 (June 8, 1965).
75. Brownell, G. L.: Acids, Maleic and Fumaric, in N. M. Bikales (ed.), "Encyclopedia of Polymer Science and Technology," vol. 1, pp. 67–95, Interscience, New York, 1964.
76. EPDM Resins Show High Weather Resistance, *Chem. Eng. News*, Dec. 7, 1970, p. 55.
77. Chopey, N. P.: Three Polymerization Lines Yield ABS Plastics Array, *Chem. Eng.*, Sept. 17, 1962, pp. 154–156.
78. Coulter, K. E., H. Kehde, and B. L. Hiscock: Styrene and Related Monomers, *Professors' Workshop, Midland, Mich., May 1968.*
79. Daly, I. E. (to United States Rubber Co.): Composition of Butadiene-Acrylonitrile Copolymer and Styrene-Acrylonitrile Copolymer, U.S. Pat. 2,439,202 (Apr. 6, 1948).
80. DeLand, D. L., J. R. Purdon, and D. P. Schoneman: Elastomers for High-Impact Polystyrene, *Chem. Eng. Prog.*, 63(7): 118 (1967).
81. Freeguard, G. F., and M. Karmarkar: Production of Rubber-modified Polystyrene, *J. Appl. Polym. Sci.*, 15: 1619–1655 (1971).
82. Fremon, G. H., and W. N. Stoops (to Union Carbide Corp.): Shock-resistant Rigid Polymer, U.S. Pat. 3,168,593 (Feb. 2, 1965).
83. Guccione, E.: A Look at the Synthesis of Ion-Exchange Resins, *Chem. Eng.*, Apr. 15, 1963, pp. 138–140.
84. Hanson, A. W., and J. S. Best: Polymerization Method, U.S. Pat. 2,989,517 (June 20, 1961).
85. Hanson, A. W., and R. L. Zimmerman: Continuous Recycle Copolymerization, *Ind. Eng. Chem.*, 49: 1803 (1957).
86. Higginbottom, B., and W. R. Hendricks: Styrene-Butadiene, in "1970–1971 *Modern Plastics* Encyclopedia," pp. 217–218, McGraw-Hill, Inc., New York, 1970.
87. Irvin, H. I. (to Borg-Warner Corp.): Blends of Graft Copolymers of Polybutadiene, Styrene, and Acrylonitrile with Interpolymers of α-Methylstyrene and Acrylonitrile, U.S. Pat. 3,010,936 (Nov. 28, 1961).
88. Jones, C., B. Harris, and F. I. Ingley (to Dow Chemical Co.): Styrene-Acrylonitrile Copolymers U.S. Pat. 2,739,142 (Mar. 20, 1956).
89. Keskkula, H., and P. A. Traylor: Microstructure of Some Rubber-reinforced Polystyrenes, *J. Appl. Polym. Sci.*, 11: 2361 (1967).

90. Lindemann, R. F.: Flame Retardants for Polystyrene, *Ind. Eng. Chem.*, **61**(5): 71, 1969.
91. Mino, G.: Copolymerization of Styrene and Acrylonitrile in Aqueous Dispersion, *J. Polym. Sci.*, **22**: 369 (1956).
92. Molau, G. E., and H. Keskkula: Mechanism of Rubber Particle Formation in Rubber-modified Vinyl Polymers, *J. Polym. Sci.*, (A-1)**4**: 1595 (1966).
93. Molau, G. E., and W. M. Wittbrodt: Colloidal Properties of Styrene-Butadiene Block Copolymers, *Macromolecules*, **1**: 260 (1968).
94. Nelb, R. G.: ABS Plastics, in W. M. Smith (ed.), "Manufacture of Plastics," vol. 1., pp. 437–455, Reinhold, New York, 1964.
95. Pendleton, J. F., D. F. Hoeg, and E. P. Goldberg: Novel Heat Resistant Plastics from Hydrogenation of Styrene Polymers, *163d Am. Chem. Soc. Meet., Boston, Mass.*, 1972.
96. Seymour, R. B. (to Monsanto Co.): Plasticized Polystyrene, U.S. Pat. 2,574,439 (Nov. 5, 1951).
97. Shell International Research (to G. Holden and R. Milkovich): Rubberlike Block Copolymers, Belg. Pat. 627,652 (July 29, 1963).
98. Stein, A., and R. L. Walter (to Monsanto Co.): Suspension Process for the Polymerization of Vinylidene Aromatic Hydrocarbons, U.S. Pat. 2,862,906 (Dec. 2, 1958).
99. Stein, A., and R. L. Walter (to Monsanto Co.): Suspension Process for Polymerization of Vinylidene Aromatic Hydrocarbons Having Rubbery Conjugated 1,3-Diene Polymers Dissolved Therein, U.S. Pat. 2,862,907 (Dec. 12, 1958).
100. Styrene Products Ltd. (by H. G. Henshall and E. G. Barber): Polyvinyl-Aromatic Compounds, British Pat. 854,238 (Nov. 16, 1960).
101. Weaver, E. P.: Acrylonitrile-Butadiene-Styrene, "1968 *Modern Plastics* Encyclopedia," pp. 111–114, McGraw-Hill, Inc., New York, 1967.
102. Whitby, G. S.: "Synthetic Rubber," Wiley, New York, 1954.
103. Ziemba, G. P.: Acrylonitrile-Styrene Copolymers, in N. Bikales (ed.), "Encyclopedia of Polymer Science and Technology," vol. 1, pp. 425–435, Interscience, New York, 1964.
104. Zimmerman, R. L., J. S. Best, P. N. Hall, and A. W. Hanson: Continuous Recycle Copolymerization Design for Effective Heat Exchange and for Handling Inert Diluents, *Adv. Chem. Ser.*, **34**: 225 (1962).

Index

ABS (acrylonitrile-butadiene-styrene) plastics, 2–3, 312, 361, 365–370
  phases, 351, 365
  process outlines, 365–366
  processes, 365–369
    bulk, 368
    emulsion, 367–368
    mechanical blending, 368–369
    suspension, 368
  production, 2–3
  related plastic, 368
  rubber latices used, 365, 367
Acetophenone, 307
Acetylene:
  costs, 178
  hydrochlorination (*see* Vinyl chloride, hydrochlorination of acetylene)
  production, 47–48, 57–62, 176, 178
    calcium carbide process, 178
    flame pyrolysis, 58–61
    Wulff process, 57–58, 181
  purification, 180
  recovery, 47–48, 182–183
  safety considerations, 178–179
Acetylenic hydrocarbons in pyrolysis product streams:
  recovery, 55, 61
  removal of, 44–48
    back-end converter, 45, 47
    cold-hydrogen process, 47
    front-end converter, 45–46
    solvent absorption, 47–48
    tail-end converter, 45, 47
Acid gas removal from pyrolysis product streams, 43–44
Additives for plastics, 81, 102, 158, 162, 226, 248, 319
Allbright-Haug process, 207
Alkar process, 283–284
Alumina, 48, 286
Aluminum trichloride, 274–283
Aromatics:
  production, 6, 10
  recovery, 56
Autoacceleration, 217–221, 251, 315–317
Autoclaves (*see* Reactors)