Note: This is a reference cited in *AP 42, Compilation of Air Pollutant Emission Factors, Volume I Stationary Point and Area Sources.* AP42 is located on the EPA web site at www.epa.gov/ttn/chief/ap42/

The file name refers to the reference number, the AP42 chapter and section. The file name "ref02_c01s02.pdf" would mean the reference is from AP42 chapter 1 section 2. The reference may be from a previous version of the section and no longer cited. The primary source should always be checked.

AP42 Section 6.6.2

Background Ref: 18

Title: Written communication from Ken Meardon, PES, Inc. to Polymer Manufacturing NSPS File. Revised costs for PET Regulatory Alternatives

August 20, 1984

M E M O R A N D U M

August 20, 1984

TO: Polymer Manufacturing NSPS File

FROM: Ken Meardon, Pacific Environmental Services, Inc.

SUBJECT: Revised Costs for PET Regulatory Alternatives

- -

The purpose of this memo is to present the assumptions and calculations used to determine the ethylene glycol (EG) control costs associated with the regulatory alternatives for the poly(ethylene terephthalate) (PET) model plants. The revisions were made as a result of comments and additional information from Allied Fibers and Plastics since May 19, 1983. This memorandum supercedes Docket Entry No. II-B-62, which contains the original calculations.

Attachment I details the derivation of equipment sizing and costs for the baseline system for PET plants producing a low viscosity product, or a high viscosity product using a single end finisher. Attachment II details the equipment sizing and costs for the regulatory alternatives beyond baseline for the PET model plants. The baseline system for PET plants producing a high viscosity product using multiple end finishers is discussed in the footnotes to Table E-16 in the background information document.

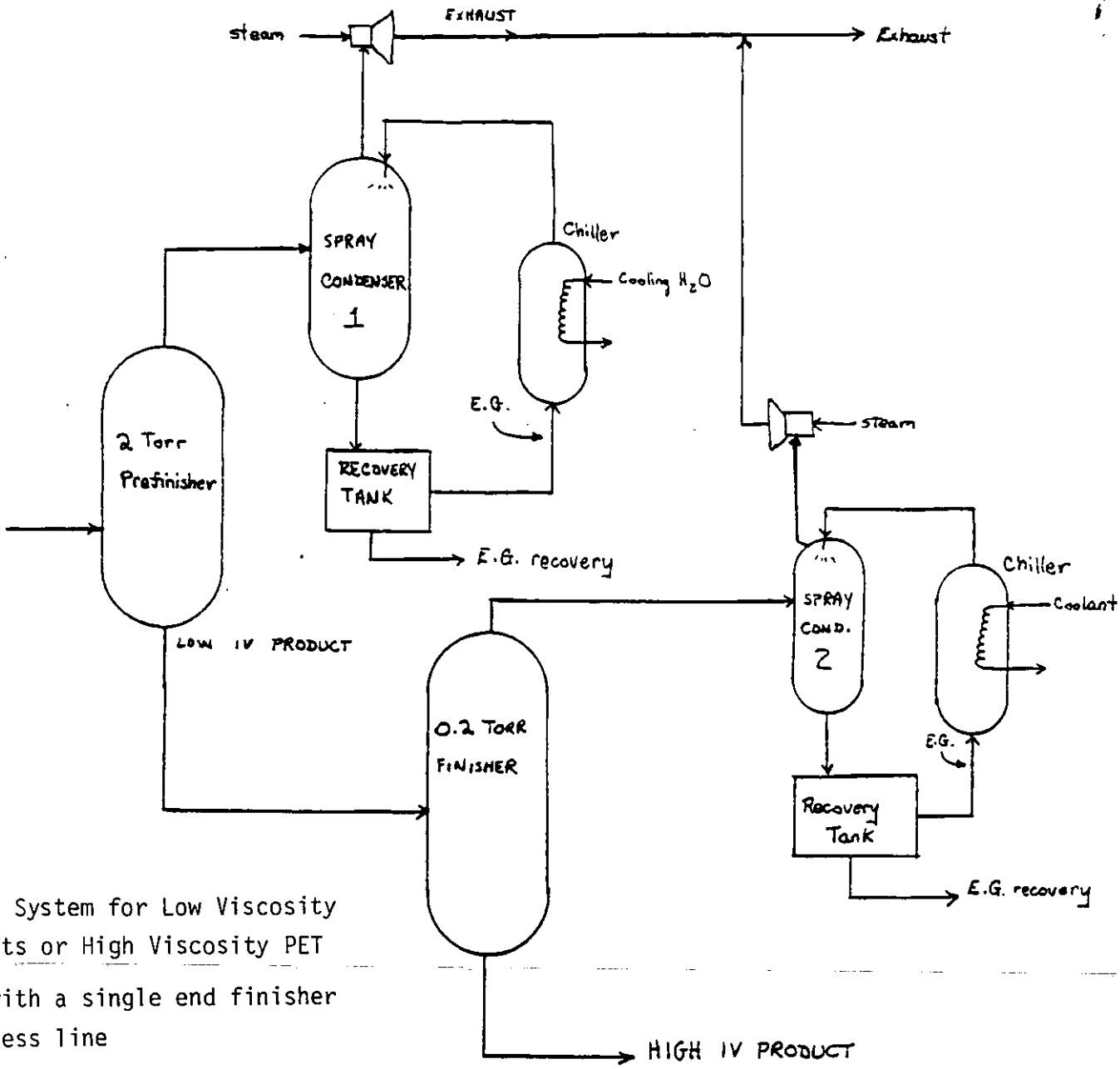

Baseline System for Low Viscosity PET Plants or High Viscosity PET Plants with a single end finisher per process line

Assumptions: 1) Spray condensor 1 is 99% efficient, outlet = 0.155 lb/1000 lb prod.
spray condenser 2 is 90% efficient, outlet = 0.140 lb/1000 lb prod.
$\therefore$ system $= 1 - \frac{.155 + .14}{15.5 + 1.4} =$ 98.3% efficient, outlet = 0.295 lb/1000 lb prod

2) Spray condenser 1 Δp = 1 torr
spray condenser 2 Δp = 0.1 torr

3) All vessel streams + pressures identical to baseline system

I. Prefinisher Spray Condenser System

A. Exhaust from prefinisher

$T = 290°C$ ($554°F$)

Glycol = 15.5 lb/1000 lb product = 15.5 (3.8) = 58.9 lb/hr

H_2O + Air = 20% of volume

1. Assuming ideal gas behavior for all components: $PV = nRT$

$$V = \frac{nRT}{P}$$

$$V \propto K n$$

since $K\left(\frac{RT}{P}\right)$ is fixed $\quad \frac{V_{EG}}{n_{EG}} = \frac{V_{H_2O}}{n_{H_2O}} = \frac{V_{AIR}}{n_{air}}$

$n_{EG} = 58.9$ lb EG/hr / 62 lb/lb mole = 0.95 lb mole/hr

since $V_{H_2O} = 0.1\ V_{EG}$, H_2O = 0.095 lb mole/hr $\times 18$ lb/mole = 1.71 lb/hr

$V_{air} = 0.1\ V_{EG}$, Air = 0.095 lb mole/hr $\times 28.8$ lb/mole = 2.74 lb/h

m. wt = 55.6

2. Partial pressures & molar content

$\therefore\ P_{EG} = 0.8 \times 2$ torr = 1.60 torr

$P_{H_2O} = 0.1 \times 2$ torr = 0.20 torr

$P_{AIR} = 0.1 \times 2$ torr = 0.20 torr

3. Condensation temperature calculation

Assuming
1) Spray condenser pressure drop = 0.1 torr
2) Air inleakage of 10 lb/hr
3) 99% E.G. removal

∴ Desired spray condenser outlet parameters

$H_2O = 1.71$ lb/hr

Air $= 2.74 + 10 = 12.74$ lb/hr

E.G. $= 0.01 \times 58.9 = 0.589$ lb/hr

Pressure $= 2.0 - 0.1 = 1.90$ torr

$$MW = \frac{1.71 + 12.74 + 0.589}{1.71/18 + \frac{12.74}{28.8} + \frac{0.589}{62}} = 27.5 \text{ lb/lb mole}$$

given ρ_a & n_a

$n_{E.G.} = 0.589$ lb/hr $/ 62 \frac{lb}{mole} = 0.0095$ lb mole/hr

$n_{air} = 12.74$ lb/hr $/ 28.8 = 0.442$ lb mole/hr

$n_{H_2O} = 1.71$ lb/hr $/ 18 = 0.095$ lb mole/hr

total $= .5465$ lb mole/hr

∴ $\rho_{EG} = .0095/.5465 \times 1.9 = .033$ torr

$\rho_{H_2O} = .095/.5465 \times 1.9 = .330$ torr

$\rho_{air} = .442/.5465 \times 1.9 = 1.537$ torr

total 1.900 ✓

required temperature is controlled by glycol vapor pressure:

Clausius-Clapeyron solution for E.G.

$$\ln P_{mmHg} = -7023.5073 \frac{1}{T^\circ K} + 21.53825$$

or $$T(^\circ K) = \frac{7023.5073}{21.53825 - \ln P}$$

$$= \frac{7023.5073}{21.53825 - \ln(0.033)}$$

$$= 281.5\ ^\circ K = 8.5^\circ C = 47.3\ ^\circ F$$

∴ will use 45°F as design temperature

4. Required cooling

a. ethylene glycol condensation:

$\Delta H_v = 191.12 \text{ cal/gm} \times 9/5 = 344 \text{ BTU/lb}$

$Q = \Delta H_v \times m = 344 \text{ BTU/lb} \times (58.9 - 0.589) = 20,060 \text{ BTU/hr}$

b. ethylene glycol cooling

$Q = C_p \Delta T \dot{m} \qquad C_p = 0.695 \text{ BTU/lb°F}$

$Q = 0.695 \frac{\text{BTU}}{\text{lb°F}} \times (554°F - 45°F) \times 58.9 \frac{\text{lb}}{\text{hr}} = 20,836 \text{ BTU/hr}$

c. Overhead air cooling

$Q = C_p \Delta T \dot{m} \qquad \overline{C_p} = 0.265 \text{ BTU/lb°F}$

$Q = 0.265 \times (554 - 45) \times 2.74 \text{ lb/hr} = 370 \text{ BTU/hr}$

d. Inleakage air cooling (assuming $T_{amb} = 90°F$)

$Q = 0.265 \times (90 - 45) \times 10 \text{ lb/hr} = 120 \text{ BTU/hr}$

e. Overhead water vapor cooling

$\overline{C_p} = \frac{0.165 + 0.23}{2} = 0.198$

$Q = 0.198 \times (554 - 45) \times 1.71 \text{ lb/hr} = 172 \text{ BTU/hr}$

∴ TOTAL COOLING REQUIRED = 41,558 BTU/hr

5. Heat exchanger siging

Spray condenser outlet temp. = 45°F

Will use inlet glycol temperature of 40°F

Required glycol flow =

$Q = \dot{m}\bar{C}_p\Delta T$ $\quad Q = 41,600$ BTU/hr $\quad \Delta T = 5°F$ $\quad \bar{C}_p = 0.565$ BTU/lb°F (McCabe+Smith, p.986)

$$\dot{m} = \frac{Q}{\bar{C}_p \Delta T} = \frac{41,600}{0.565 \times 5} = 14,725 \text{ lb/hr}$$

Using Cooling medium as chilled water at 32°F inlet, 40°F outlet

$Q = \dot{m}\bar{C}_p\Delta T$ required water flow

$$\dot{m} = \frac{Q}{C_p \Delta T} = \frac{41,600 \text{ BTU/hr}}{1 \text{ BTU/lb°F} \times 8°F} = 5,200 \text{ lb/hr}$$

∴ System parameters are:

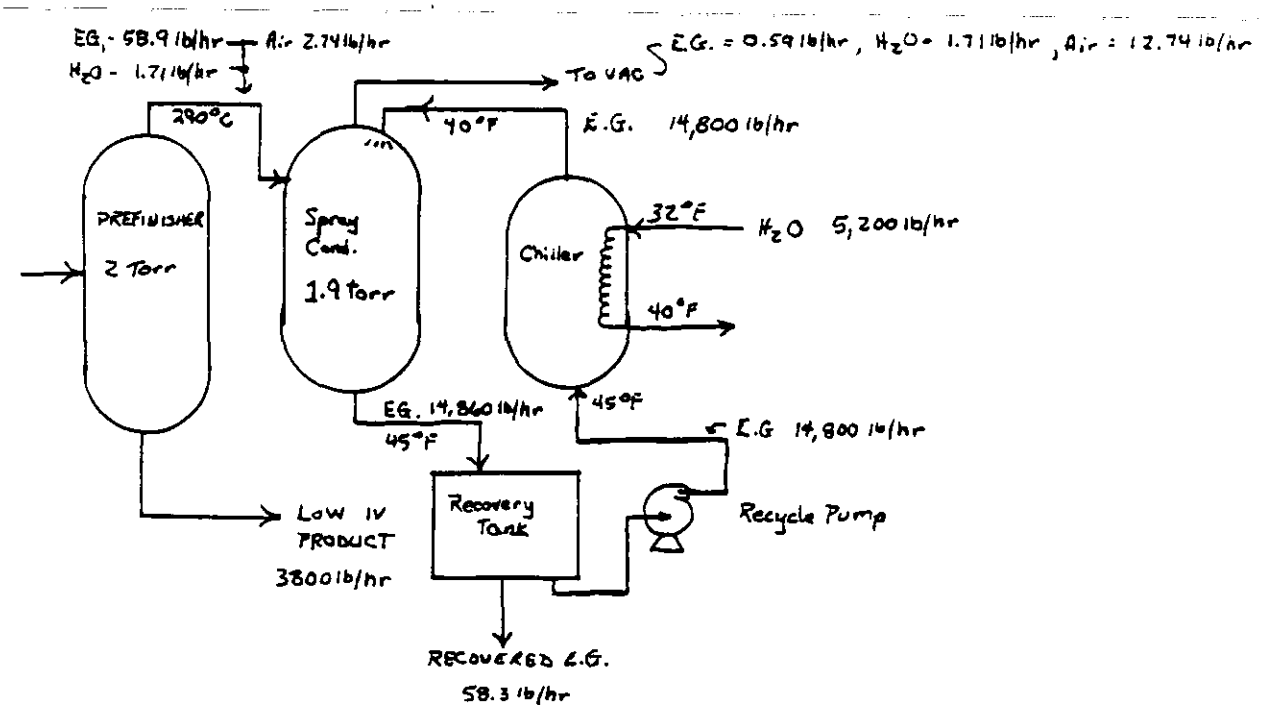

Using scraped surface heat exchanger:

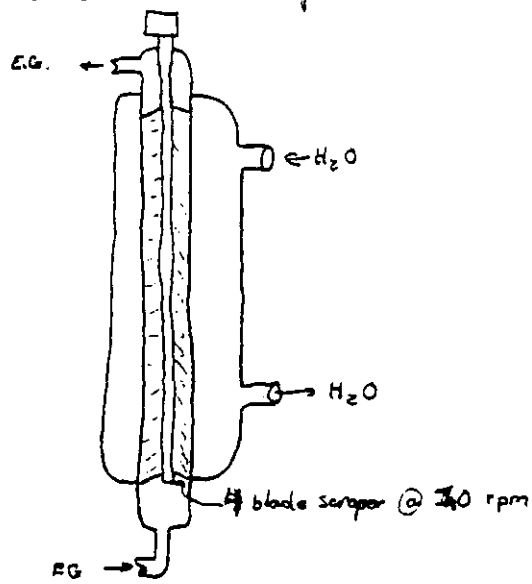

$$h_i \equiv \frac{Q_T}{t_T A (T_s - T_a)} = a\sqrt{\frac{K c_p \rho n B}{\pi}}$$ McCabe & Smith p 433-434

assuming → B = 4 (blades), n = 1 x 60 = 60 r/hr ∴ nB = 240 hr^{-1}

$$h_i = a\sqrt{\frac{K c_p \rho\, 240}{\pi}}$$

c_p = 0.565 BTU/lb°F

ρ = 70.2 lb/ft³

k_{EG} = 0.153 BTU/ft hr °F (M&S, p 984)

$$= a\sqrt{\frac{.153\ \text{BTU/ft hr °F} \times 0.565\ \text{BTU/lb°F} \times 70.2\ \text{lb/ft}^3 \times 240\ \text{1/hr}}{\pi}}$$

$$= 43\ \text{BTU/ft}^2\ \text{hr °F}$$

$$T_s - T_A = T_{H_2O} - T_{EG} = \Delta T_{LM} = \frac{\Delta T_{H_2O} - \Delta T_{EG}}{\ln(\Delta T_{H_2O}/\Delta T_{EG})} = \frac{8 - 5}{\ln 8/5} = 6.38°F$$

$$A = \frac{Q_T}{t_T\ h_i\ \Delta T}, \quad t_T = 1/nB = .004167\ \text{hrs}, \quad Q_T/t_T = 41{,}600\ \text{BTU/hr}$$

$$A = \frac{41{,}600\ \text{BTU/hr}}{43\ \text{BTU/ft}^2\text{hr°F} \cdot 6.4°F} = 151.2\ \text{ft}^2$$

12" ID tube, L = 193 ft ⇐ (12x14) 4, 50' passes

Assuming 24" ID Tube, L = 48 ft

Assuming 36" ID tube, L = 21.4 ft ⇐

calculated scraped surface exchanger is 36" ID tube, 21.4 ft long

will use 50% oversize to allow for oligomer fouling,

∴ 3' ID scraped tube, 30' long

<u>assuming</u> h_i is controlling factor (i.e. h_o water > 50)

6. Recycle Pump Sizing

Assumptions:

1. Spray Condenser 50 feet high
2. Pump at ground level
3. Heat exchanger pressure drop negligible
4. 40' of 2" pipe total in pump loop:

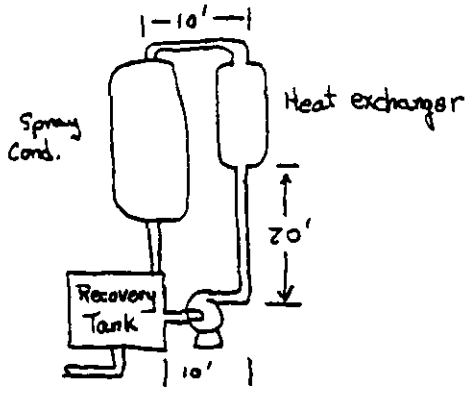

5. Nozzle pressure 1 psia
6. Pumped fluid is ethylene glycol at 45°F, 14,725 lbm/hr

∴ Pump work = head lift work + ΔP work + PIPE LOSS WORK + KINETIC ENERGY

$$\therefore \eta W_p = \frac{P_b - P_a}{\rho} + \frac{g}{g_c}(z_b - z_a) + \frac{\bar{V}_b^2 - \bar{V}_a^2}{2g_c} + h_f$$

given –

ρ E.G. = SpG x ρ_{H_2O} = 1.0821 x 62.425 = 67.55 lb/ft^3

$\bar{V}_b^2 = \bar{V}_a^2$ (both 2" pipe)

assuming friction is negligible

$$\eta W_p = \frac{g}{g_c}(z_b - z_a) + \frac{P_b - P_a}{\rho}$$

z_b = 50 ft, z_a = 0 ft, P_b = 1 PSIA = 144 lb/ft^2, P_a = 14.7 psia = 2117 lb

$$\therefore \eta W_p = 50 + \frac{144 - 2117}{67.55} \left(\frac{ft\ lb_f}{lb_{mass}}\right)$$

$$= 20.8\ ft\ lb_f/lb_m$$

$$20.8 \times 14725\ lb_m/hr \times \frac{1\ hr}{3600\ sec} = 85.08\ ft\ lb_f/sec$$

$$\div 550 = .155\ hp\ (\eta W)$$

assuming η = 0.25 (50% pump hp, 50% motor hp)

PUMP SIZE = 0.62 hp

∴ will specify 1 horsepower pump to allow for neglected friction, etc.

II Finisher Condenser System

A. Exhaust From Finisher

T = 290°c (554°F)
Glycol = 1.4 lb/1000 lb product , 1.4 (3.8) = 5.32 lb/hr
Air = 10% volume
No H_2O

assuming ideal gas behavior:

$$\frac{V_{EG}}{V_{AIR}} = \frac{n_{EG}}{n_{air}}$$

n_{EG} = 5.32 lb/hr / 62 lb/lb mole = 0.085 lb mole/hr

$n_{air} = n_{EG} \frac{V_{air}}{V_{EG}} = 0.085 \times \frac{0.1}{0.9} = .00944$ mole/hr

$\times 28.8$ lb/lb mole = 0.272 lb/hr

MW = 59.24 , flow = 5.32 + 0.272 = 5.592 lb/hr

B. Partial Pressures & molar content

$\therefore P_{EG} = .9 \times 0.2$ torr = 0.18 torr
$P_{air} = .1 \times 0.2$ torr = 0.02 torr

C. Condensation temperature calculation

Assuming
1) spray condenser ΔP = 0.1 torr
2) air inleakage = 5 lb/hr
3) 90% EG removal

∴ Desired spray condenser outlet

Air = 5 + 0.272 = 5.272 lb/hr
E.G. = 5.32 x 0.1 = 0.532 lb/hr
P = 0.1 torr

since $p_a \approx n_a$

n_{air} = 5.272 ÷ 28.8 = 0.183 lb mole/hr
$n_{eg.}$ = 0.532 ÷ 62 = 0.0086 lb mole/hr
total = 0.1916 lb mole/hr

p_{air} = .183/.1916 x 0.1 torr = .0955 torr
$p_{E.G}$ = .0086/.1916 x 0.1 torr = .0045 torr

required temperature is controlled by $p_{E.G.}$

$$\ln P_{torr} = -7023.5073 \frac{1}{T^\circ K} + 21.53825$$

or $$T(^\circ K) = \frac{7023.5073}{21.53825 - \ln P}$$

∴ T°K = 260.7 = -12.4°C ≅ 10 °F

will use 0°F as design temperature for spray inlet

D. Required cooling = glycol condensation + glycol cooling + exhaust air cooling + inleak air cooling

$= \Delta H_{v_{EG.}} \times \text{Cond. e.g.} + c_{p_{EG}} \times \dot{m}_{EG} \times \Delta T + c_{p_{Air}} (\dot{m}_{air_{ex}} \Delta T + \dot{m}_{air_{in}} \Delta T)$

$= 344 \times (0.9 \times 5.32) + [.695 \times 554°F \times 5.32] + 0.265 [5 \times 70°F + .27 \times 554°F]$

= 3828 BTU/hr

E. Scraped surface exchanger sizing

assuming $B = 4$, $n = 1$ rpm (60 rph)

$$nB = 240\ hr^{-1}$$

$$h_i = 2\sqrt{\frac{K c_p \rho\ nB}{\pi}}$$

$$= 2\sqrt{\frac{.153\ BTU/ft\ hr\ °F \times 0.565\ BTU/lb°F \times 70.2\ lb/ft^3 \times 240\ hr^{-1}}{\pi}}$$

$$= 43.06\ BTU/ft^2\ hr\ °F$$

assuming glycol temp in = 10°F, out = 0°F
codant temp in = -20°F, out = 0°F

$$\Delta T_{LM} = \frac{(10-0) - [0-(-20)]}{\ln(10/20)} = 14.4\ °F$$

$$A = \frac{Q_T}{h_i\ \Delta T} = \frac{4{,}000\ BTU/hr}{43\ BTU/ft^2\ hr\ °F \times 14.4\ °F} = 6.5\ ft^2$$

Assuming 12" I.D. TUBE, $L = A/s = \dfrac{6.5\ ft^2}{\left[\frac{\pi\left(\frac{12}{12}\right)^2}{4}\right]} = 8.3\ ft$

F. Glycol spray flow

$Q = \dot{m} C_p \Delta T$

$C_p = 0.565\ BTU/lb°F$
$\Delta T = 10°F$
$Q = 4{,}000\ BTU/hr$

$$\dot{m} = \frac{4000}{0.565 \times 10} = 708\ lb/hr$$

G. Pump Size

E.G. recycle flow is << than prefinisher system flow therefore, 1 HP pump will be more than adequate

III. System Costs

Capital Cost Items ARE:

1) Spray condensers
2) Recycle Pumps
3) Scraped Surface Exchangers
4) Recovery Tank
5) Refrigeration Systems
6) Vacuum System Components for pressure drop correction

Annual Cost Items are:

1) Refrigeration Electricity
2) Labor
3) Scraped Surface Exchanger rotor electricity
4) Recycle Pump Electricity
5) Vacuum system increased operating costs
6) Maintenance Parts + Labor
7) Glycol recovery savings

Capital Cost Items:

I) Scraped Surface Exchangers

Double Pipe Exchanger Cost
Peters & Timmerhaus Fig 14-17 p 671, Jan'79 $

316 S.S. Tubes -

Plot of form $\log P(\$) = k \log A(ft^2) + m$

data	$1\ ft^2$	= \$820	$\log A =$ 0	$\log P =$	2.914
	$100\ ft^2$	= \$1800	2		3.255

$$k = \frac{\Delta \log P}{\Delta \log A} = \frac{0.341}{2} = 0.1705$$
$$m = 2.914$$

$$\therefore \log P = 0.1705 \log A + 2.914$$

Prefinisher exchanger = $150\ ft^2$, PRICE ≅ \$1930 (Jan '79)

finisher exchanger $A = 6.5\ ft^2$, PRICE ≅ \$1130 (Jan '79)

will estimate motor, wiper, etc at 100% of exchanger cost,

so	Prefinisher exchanger =	\$3860	(Jan 79)	\$4362	Jn'80
	finisher exchanger =	\$2260	(Jan 79)	\$2554	Jn'80

C/E cost index - Jan 79 - 229.8 (4/23/79) factor: 1.13
June 80 - 259.2 (11/12/80)

II) PUMPS - each 1 HP

PER Hall, et.al. "Current Costs of Process Equipment"
Ch. Engineering, 4/5/82 Vol. 89 No. 7
Fig 30

Asymtopic Cost for small pumps of $1,000 ea. Jan '82

Index Jan. 82 311.8
Jun. 80 259.2

Ratio = 0.831
Cost = $1,000 X 0.831 = $831

III) Refrigeration System

Per Envirosciences
20°F System, 4 TON SYSTEM (48,000 BTU/hr) = $10,000 installed, DEC
- 20°F System, 1 TON SYSTEM (12,000 BTU/hr) = $9,800 installed, DEC '79

descalation $\frac{259.2}{279.6^*}$ = 0.928

4 TON, 20°F = $9283
1 TON, -20°F = $9100

* April 21, 1980 Ch. E.

IV) Ethylene Glycol Recovery System

Per previous submittal - $386,300

V Spray Condensers

21,200 ea descalation factor = 0.82

June 80 cost = $17,384

REGULATORY ALTERNATIVE COSTS

CAPITAL COSTS

I. Prefinisher Spray Condenser System (all equipment spared)

June 1980 dollars

A. Spray Condensers	14 @ 17,384	=	$243,376
B. Scraped Surface Exchangers	14 @ 1,930	=	27,020
C. Pumps	14 @ 831	=	11,634
D. EG Recovery Components	1 @ 386,300	=	386,300
Subtotal			$668,330
Installation	3.24 x equipment	=	$2,165,390
Subtotal Installed			$2,833,720
E. Refrigeration Systems (Installed)	7 @ 9,283	=	64,981
TOTAL PREFINISHER SYSTEM CAPITAL		=	$2,898,700

II. Finisher Spray Condenser System

A. Condensers	14 @ 17,384	=	$243,376
B. Exchangers	14 @ 1,130	=	15,820
C. Pumps	14 @ 831	=	11,634
Subtotal			$270,830
Installation	3.24 x equipment	=	877,489
Subtotal Installed			$1,148,319
D. Refrigeration Systems (Installed)	7 @ 9,100	=	63,700
TOTAL FINISHER SYSTEM CAPITAL		=	$1,212,019

III. Esterifiers

A. Exchangers	14 @ 1,530*	=	$21,420
B. Reflux condensers	14 @ 17,834**	=	243,376
Subtotal			$264,796
Installation	3.24 × equipment		857,939
TOTAL ESTERIFIER SYSTEM CAPITAL			1,122,735

* Assumed to be equal to average of exchanger costs for the prefinisher & finisher systems.

** Assumed equal to spray condenser costs.

ANNUALIZED COSTS

I. Prefinisher and E.G. Recovery System

A. Operating Labor	$154,800[a]
B. Maintenance Materials and Labor	21,700[a]
C. Capital Recovery (0.163 × capital)	472,488
D. Taxes, Ins., & Admin (0.04 × capital)	115,948
E. Electricity	49,820[b]
F. Steam	880,792[c]
G. Water	4,650[a]

a/ from earlier approximation

b/ 1) Pump Electricity = 14 pumps @ 1 hp

$14 \times 1\ HP \times .746\ \frac{kW}{HP} \times 8760\ hr/yr = 45{,}745\ kWh/yr$

$45{,}745\ kWh/yr \times \$0.049/kWh = \$2{,}240/yr$

2) Refrigeration electricity = 7 systems @ 10 tons, 1.22 HP/TON (Environscience)

$= 7 \times 10 \times 1.22 \times 0.746 \times 8760 \times 0.049 = \$28{,}350/yr$

3) Recovery System = 412,800 kWh/yr[a] × 0.049 = $20,230/yr

c/ Steam increase for vacuum jets

Baseline system = 63.4 lb/hr @ 2.0 torr ≈ 5% uncondensables

w/spray condenser = 15.04 lb/hr @ 1.9 torr ≈ 98% uncondensables

per Attachment I, increase = 8.523×10^6 #/yr

E.G. recovery system steam[a] = 1.34×10^8 #/yr

TOTAL STEAM INCREASE = 1.42523×10^8 #/yr × $6.18/1000 lb = $880,792

II. FINISHER SYSTEM[a]

A. Operating Labor	$18,720[b]
B. Maintenance Labor & Materials	c
C. Capital Recovery (0.163 × capital)	197,559
D. Taxes, Ins., & Admi (0.04 × capital)	48,481
E. Electricity	7,240[d]
F. Steam Increase	37,138

a/ Costs assume the prefinisher system, and hence the E.G. recovery system already installed.

b/ Based on 20 hrs/wk added labor @ $18/hr: 20 × 52 × 18 = $18,720

c/ Assumed included in prefinisher system costs.

d/ Pump electricity = $2,240/yr as in prefinisher system
Refrigeration electricity = 7 systems × 1 ton each × 2.23 $\frac{HP}{TON}$ × .746 × 8760 × 0.9
= $5,000/yr

e/ Steam jet increase per attachment II
7 × 98 #/hr × 8760 hr/yr × $6.18/1,000 lb = $37,138

III. ESTERIFIER SYSTEM

A. Electricity	$29,590 [a]
B. Capital Recovery (0.163 × capital)	183,005
C. Taxes, Ins., & Admin. (0.04 × capital)	44,909

a/ Assumed to be same as for spray condenser system on prefinishers (i.e., pump electricity + refrigeration electricity).

COST SUMMARY

	Prefinisher	Finisher	Esterifier	Total
Capital	2,898,700	1,212,019	1,122,735	5,233,454
Annualized	1,700,198	309,138	257,504	2,266,840

REGULATORY ALTERNATIVES BEYOND BASELINE FOR PET PLANTS

High Viscosity PET Production Using Multiple End Finishers

The regulatory alternatives for this model plant consisted of sending additional amounts of cooling water to the existing distillation column. Table II-1 summarizes the relevant parameters for determining the flow to the distillation column and ethylene glycol (EG) emissions to the atmosphere.

As the flow to the distillation column changes, the size of the column required and its cost will also vary. Based on information provided by industry and scaled to this model plant size, the total flow to the distillation column is 2.187 gpm, of which 0.237 gpm comes from the cooling tower and 1.95 gpm from other sources in the process line. The cost of the initial distillation column was estimated to be $568,000 (June 1980). This estimate was derived from industry supplied information on the cost for a distillation column on a cooling water tower. The capital costs for the various flows beyond baseline were calculated using the following equation:

$$\$ = \left(\frac{1.95 + \text{gpm}}{2.187} \right)^{0.6} \times \$568{,}000$$

The results of these calculations are included in Table II-2.

Low Viscosity PET Production, and High Viscosity PET Production Using Single End Finishers

Both the PET/DMT and the PET/TPA - single end finisher model plants have a regulatory alternative in which a distillation column is installed to reduce the ethylene glycol (EG) concentration in the cooling tower and, thereby, the ethylene glycol emissions to the atmosphere. For the PET/DMT model plant, EG emissions to the atmosphere are about 4.78 lbs/hr and, for the PET/TPA model plant, about 4.24 lbs/hr. The EG concentration in the cooling tower is assumed to be 0.31 percent for the TPA plant and slightly higher at 0.35 percent for the DMT plant. The

existing cooling tower system is assumed to be in equilibrium so that EG entering the cooling tower is equal to that lost to the atmosphere (i.e., 4.78 lbs/hr for PET/DMT and 4.24 lbs/hr for PET/TPA).

The regulatory alternative based on adding a distillation column is assumed to reduce EG emissions by one-half. This is assumed to occur by decreasing the EG concentration in the cooling tower to about 0.16 percent in the TPA plants and to about 0.18 percent in the DMT plants. Finally, it was assumed that the recovery efficiency of a distillation column on this concentration would be 40 percent.

Based on these assumptions and using the procedures outlined above for calculating the material balance for ethylene glycol, the following results are obtained:

	DMT	TPA	Equation
Flow to distillation column, gpm	13.26	13.25	
EG recovered, lbs/yr	41,117	36,486	
Capital cost of distillation column	$1,675,275	$1,675,275	$\frac{13.25}{10}^{0.6} \times \$1,415,000$
Steam cost	$323,919	$288,563	
Recovery credit	$11,101	$9,851	
Emission reduction, Mg/yr	18.65	16.55	

These results apply to the model plants as a whole, and not to the cost of control for a single process line. It is unlikely that a separate cooling tower would be built for each of the seven lines in the model plant. For purposes of this analysis it was assumed that the costs associated with a single process line were equal to one-seventh of those costs associated with a distillation column for the whole plant.

TABLE II-1. MATERIAL BALANCE OF ETHYLENE GLYCOL FOR HIGH VISCOSITY PET PLANTS USING MULTIPLE END FINISHERS

(A) Concentration of Ethylene Glycol in Cooling Water in Tower, percent	(B) Ethylene Glycol Emissions to the Atmosphere, lbs/hr[a]	(C) Ethylene Glycol to the Distillation Column, lbs/hr[b]	(D) Ethylene Glycol Recovery Efficiency in Column, percent[c]	(E) Ethylene Glycol Recycled Overhead to Tower, lbs/hr[d]	(F) Ethylene Glycol Recovered, lbs/hr[e]	(G) Flow to Distillation Column, gpm[f]
8.95[g]	17.23	10.71	94.95	0.54	10.17	0.237
8.0	15.39	12.74	94.3	0.73	12.01	0.315
7.0	13.45	14.94	93.4	0.99	13.95	0.423
6.0	11.51	17.23	92.2	1.34	15.89	0.570
5.5	10.55	18.45	91.35	1.60	16.85	0.666
5.0	9.58	19.69	90.5	1.87	17.82	0.783
4.0	7.66	22.43	88.0	2.69	19.74	1.117

[a]Based on a circulation rate of ~~1,100~~ 1,270 gallons per minute and a windage rate of ~~0.045~~ 0.03 percent.

Example: 17.23 = (0.0895 x 1,270 g/m x 60 m/hr x 0.0003) x (9.25 x %EG + 8.34 x %H_2O) where %EG = 0.0895; % H_2O = 0.9105.

[b]Based on an initial flow of 27.4 lbs/hr of EG to the cooling water tower from the finishers (derived from industry data) and calculated as follows:

Example: ~~5.3~~ 10.71 = $\frac{27.4 - (B = 17.23)}{D\ K\ (= 0.9495)}$

[c]Derived from industry data.

[d]Column E = Column C x $\left(\frac{100 - \text{Column D}}{100}\right)$

[e]Column F = Column C x Column D

[f]Column G = Column C ÷ (Column A x 60 min/hr x (9.25 x %EG + 8.34 x % H_2O))

Example:

$$0.237 = \frac{10.71}{(0.0895 \times 60 \times (9.25 \times 0.0895 + 8.34 \times 0.9105))}$$

[g]The figures in this row represent the baseline situation.

TABLE II-2. SUMMARY OF CAPITAL AND ANNUAL OPERATING COSTS FOR HIGH VISCOSITY PET PLANTS USING MULTIPLE END FINISHERS

Ethylene Glycol Concentration, percent	Flow, gpm	Cost Item	
		Distillation Column	Steam
8.95	0.237	$568,456	$5,344
8.0	0.315	$580,535	$7,167
7.0	0.423	$596,989	$9,719
6.0	0.570	$618,911	$13,230
5.5	0.666	$632,951	$15,545
5.0	0.783	$649,788	$18,354
4.0	1.117	$696,331	$26,435